TECHNICAL MANUAL

GENERAL INSTRUCTIONS

MARKING OF USAF GENERAL SUPPORT EQUIPMENT (SE)

This manual supersedes TO 35-1-18 dated 2 July 2025.

DISTRIBUTION STATEMENT A - Approved for public release: distribution is unlimited. PA Case Number 21-10413.

Published Under Authority of the Secretary of the Air Force

24 JULY 2026

LIST OF CHANGES

Publication History

Publication Date	Revision	Remarks
24 July 2026	4	Added Table 2-1 and new Figure 2-42.
2 July 2025	3	Modified technical content
10 April 2025	2	
3 November 2022	1	Updated the Scope paragraph
31 January 2022	Original Publication	

TOTAL NUMBER OF PAGES IN THIS PUBLICATION IS 122.

List of Changes

Content Changed	Change Type	Remarks
Content in Paragraph 3	Added	Added abbreviation.
Content in Paragraph 3	Added	Added abbreviation.
Content in Paragraph 3	Added	Added abbreviation.
Content in Paragraph 3	Added	Added abbreviation.
Content in Paragraph 3	Added	Added abbreviation.
Table 2-1	Added	Added new table.
Figure 2-42	Added	Added new figure.

TABLE OF CONTENTS

Chapter		Page
LIST OF ILLUSTRATIONS		ii
LIST OF TABLES		iii
INTRODUCTION		iv
SAFETY SUMMARY		vii
1	MARKING OF SUPPORT EQUIPMENT	1-1
1.1	GENERAL	1-1
1.1.1	Marking Illustrations and Legends	1-1
1.2	SAFETY AND SERVICING MARKINGS	1-1
1.2.1	National Star Symbol	1-1
1.2.2	Marking Requirements	1-1
1.2.3	Product Identification	1-2
1.2.4	SE Reflectorization	1-3
1.3	AGENCY IDENTIFICATION MARKINGS	1-3
1.3.1	Air Force (AF) Owned - Contractor Operated Equipment	1-3
1.3.2	Mobilized Equipment	1-3
1.4	INFORMATIONAL MARKINGS (OPTIONAL)	1-5
1.5	COLOR, STYLE AND SIZE OF MARKINGS	1-5
1.5.1	Use of Reflective Tape, Decals, and Vinyl Lettering	1-5
1.5.2	Field Numbers	1-5
1.5.3	USAF Legends	1-5
1.5.4	Color Numbers	1-6
1.5.5	Markings Size	1-6
1.5.6	Tire Pressure/Tow Speed	1-6
1.6	MAINTENANCE OF MARKINGS	1-6
1.6.1	Markings Removal	1-6
1.6.2	National Guard Decalcomania	1-6
2	MAINTENANCE OF MARKINGS	2-1
2.1	CAUTION/WARNING MARKINGS	2-1
2.1.1	Pintle Hook Caution Marking	2-1
2.1.2	Spring Loaded Warning Marking	2-1
2.1.3	Aircraft Tow bar Caution Marking	2-1
2.1.4	Tire Pressure/Tow Speed Markings	2-1
2.1.5	Personnel Static Discharge Marking	2-1
2.2	FUEL CELL REPAIR SE IDENTIFICATION	2-1

LIST OF ILLUSTRATIONS

Number	Title	Page
1-1	NATO LOX Servicing Markings	1-2
1-2	NATO Liquid Nitrogen Servicing Markings	1-2
1-3	Sample Mobility Placard	1-4
2-1	1,500 Pound Utility Crane	2-2
2-2	ACE Air Conditioner MC1A, Diesel	2-4
2-3	AF/M27M-1 Pumping Unit, Hydraulic, Diesel Driven	2-6
2-4	AF/M32T-1 Cabin Leakage Tester	2-8
2-5	Aircraft Oxygen Servicing Cart	2-10
2-6	A/M24T-8 Load Bank	2-12
2-7	A/M32A-60A Gas Turbine Generator	2-14
2-8	A/M32A-86 Generator, Diesel	2-16
2-9	A/M32A-95 Compressor, Gas Turbine, Trailer Mounted	2-18
2-10	A/M32C-10C/10D Air Conditioner Set	2-20
2-11	A/M32C-5 Air Conditioner Set	2-22
2-12	Auxiliary Ground Power Unit (AGPU)	2-24
2-13	B-1/B-2 Air Conditioner, Trailer Mounted	2-26
2-14	B-4 Maintenance Stand	2-28
2-15	B-5 Maintenance Stand	2-30
2-16	B-2 Maintenance Stand	2-32
2-17	B-7/B-1 Maintenance Stand	2-34
2-18	B809A Generator Set	2-36
2-19	C-1 Maintenance Stand	2-38
2-20	Spraying Unit, Corrosion Control Wash Cart	2-40
2-21	EPU-6 Aircraft Power Supply	2-42
2-22	FDECU-3 Environmental Control Unit	2-44
2-23	Fuel Bowser 400 Gallon	2-46
2-24	H-1 Heater	2-48
2-25	HDU-13M Heater	2-50
2-26	Hydraulic Cart	2-52
2-27	Jack, Hydraulic 10 - 30 Ton	2-54
2-28	Jack, 35 Ton, Axle	2-56
2-29	Liquid Cooling Service (LCS) Cart	2-58
2-30	Liquid Oxygen (LOX) Cart	2-60
2-31	LN2 Liquid Nitrogen Cart	2-62
2-32	MC-1A High Pack Air Compressor	2-64
2-33	MA-3D Air Conditioner	2-66
2-34	MC-2A Air Compressor	2-68
2-35	MC-7 Air Compressor	2-70
2-36	MD-1 Tow bar	2-72
2-37	MEP Generators	2-74
2-38	MHU-83C/E Bomblift Truck	2-76
2-39	MJ-1B Bomblift Truck	2-78
2-40	Hydraulic Test Stand	2-80
2-41	Light Cart, FL-1D	2-82
2-42	Light Cart, FL-1D	2-85
2-43	NF-2D Light Cart, Diesel	2-87
2-44	Oil Cart	2-89
2-45	Purging Unit GSU-62M LOX Storage	2-91
2-46	Radome Dolly	2-93
2-47	Self-Generating Nitrogen Cart	2-95
2-48	Service Cart	2-97
2-49	Trielectron Generator	2-99
2-50	Universal Maintenance Stand	2-101
2-51	New Generation Heater	2-104

LIST OF TABLES

Number	Title	Page
1-1	Mobility Placard Construction Information	1-4
1-2	Mobility Placard Stencil Requirements	1-4
2-1	Leading Particulars, Model FL-1D Floodlight	2-83

INTRODUCTION

1 PURPOSE.

The purpose of this manual is to provide information necessary for proper placement and marking of general Support Equipment (SE). This manual is designed to provide basic identification and marking information to enable SE technicians to differentiate between the different types of marking requirements to properly identify, label, stamp, and/or designate assigned equipment items. This Technical Order (TO) is specific to SE; however, for areas not covered in this manual, or expanded information on a piece of equipment, technicians or contractors should refer to the respective end item technical manual.

2 SCOPE.

This TO is designed to provide basic information to be used by Organizational/Unit, Intermediate, and Depot levels of maintenance. This manual shall be used to provide guidance for general marking of SE. In event the original TO that covers the equipment has conflicting marking information the specific SE TO takes precedence. Conflicts in resolving any conflicting materials and procedural requirements shall be referred to the SE and Vehicles Division, AFLCMC/WNZ, Robins AFB, GA. This manual consists of the following chapters:

Chapter 1	Marking of Support Equipment
Chapter 2	Maintenance of Markings

3 ABBREVIATIONS.

All abbreviations used in this manual are shown in the list of abbreviations below. Standard abbreviations are in accordance with ASME Y14.38, Abbreviations and Acronyms for Use in Product Definition and Related Documents.

AF	Air Force
AFI	Air Force Instruction
AFOSH	Air Force Office of Safety and Health
AFTO	Air Force Technical Order
AGPU	Auxiliary Ground Power Unit
ASME	American Society of Mechanical Engineers
AVGAS	Aviation Gasoline
C/W	Complied With
DoD	Department of Defense
ESDS	Electrostatic Discharge Sensitive
ETIMS	Enhanced Technical Information Management System
FSC	Federal Stock Class
HCI	Hardness Critical Item
Hz	Hertz
IC	Integrated Circuit
kW	kilowatt
LCS	Liquid Cooling Service
LOI	Local Operating Instruction
LOX	Liquid Oxygen
MAJCOM	Major Command
MAP	Military Assistance Program
MPH	Mile Per Hour
NATO	North Atlantic Treaty Organization
NSN	National Stock Number
PN	Part Number
PSI	Pound-force per Square Inch

PSIG	Pound-force per Square Inch, Gauge
RPM	Revolution Per Minute
SE	Support Equipment
TCN	Transportation Control Number
TCTO	Time Compliance Technical Order
TMO	Transportation Management Office
TO	Technical Order
USAF	United States Air Force
V	Volt
VAC	Volt Alternating Current
VDC	Volt Direct Current
W	Watt
WC	Work Card

4 RELATED PUBLICATIONS.

NOTE

When searching Technical Order (TO) numbers in the Enhanced Technical Information Management System (ETIMS) catalog, please use the wildcard (*) after typing in the TO number. Many TOs are not available in paper format, (i.e., digital (WA-1) or CD-1). This ensures TOs in all media formats will populate the search.

The following publications contain information in support of this technical manual:

List of Related Publications

Number	Title
AFI 91-203	Air Force Consolidated Occupational Safety Instruction
ASME Y14.38	Abbreviations and Acronyms for Use in Product Definition and Related Documents
TO 00-5-1	AF Technical Order System
TO 00-25-172	Ground Servicing of Aircraft and Static Grounding Bonding
TO 00-25-234	General Shop Practice Requirements for the Repair, Maintenance, and Test of Electrical Equipment
TO 1-1-3	Inspection and Repair of Aircraft Integral Tanks and Fuel Cells
TO 35-1-3	Corrosion Prevention and Control, Cleaning, Painting, and Marking of USAF Support Equipment (SE)
TO 36-1-191	Technical and Managerial Reference for Motor Vehicle Maintenance

5 RECORD OF APPLICABLE TIME COMPLIANCE TECHNICAL ORDERS (TCTOS).

List of Time Compliance Technical Orders

TCTO Number	TCTO Title	TCTO Date
None		

6 HCI HARDNESS CRITICAL ITEMS (HCI).

CAUTION

The HCI symbol (HCI) establishes special requirements limiting changes and substitutions and that the specific parts listed must be used to ensure hardness is not degraded.

If included, items with nuclear survivability requirements are marked with the HCI symbol (HCI). All changes to, or proposed substitutions of, HCIs must be approved by the acquiring activity.

7 ⚠ ELECTROSTATIC DISCHARGE SENSITIVE (ESDS) ITEMS.

CAUTION

All ESDS parts shall be handled in accordance with the ESDS device handling procedures in TO 00-25-234.

If included, items containing ESDS parts are marked with the ESDS symbol (⚠).

8 IMPROVEMENT REPORTS.

Recommended changes to this manual shall be submitted in accordance with TO 00-5-1.

SAFETY SUMMARY

9 GENERAL SAFETY INSTRUCTIONS.

This manual describes physical and/or chemical processes which may cause injury or death to personnel, or damage to equipment, if not properly followed. This safety summary includes general safety precautions and instructions that must be understood and applied during operation and maintenance to ensure personnel safety and protection of equipment. Prior to performing any specific task, the WARNINGs, CAUTIONs, and NOTEs included in that task shall be reviewed and understood.

10 WARNINGS, CAUTIONS, AND NOTES.

WARNINGs and CAUTIONs are used in this manual to highlight operating or maintenance procedures, practices, conditions, or statements which are considered essential to protection of personnel (WARNING) or equipment (CAUTION). WARNINGs and CAUTIONs immediately precede the step or procedure to which they apply. WARNINGs and CAUTIONs consist of four parts: heading (WARNING, CAUTION, or icon), a statement of the hazard, minimum precautions, and possible results if disregarded. NOTEs are used in this manual to highlight operating or maintenance procedures, practices, conditions, or statements which are not essential to protection of personnel or equipment. NOTEs may precede or follow the step or procedure, depending upon the information to be highlighted. The headings used and their definitions are as follows:

WARNING

Highlights an essential operating or maintenance procedure, practice, condition, statement, etc. Failure to comply could result in injury to, or death of, personnel or long term health hazards.

CAUTION

Highlights an essential operating or maintenance procedure, practice, condition, statement, etc. Failure to comply could result in damage to, or destruction of, equipment or loss of mission effectiveness.

NOTE

Highlights an essential operating or maintenance procedure, condition, or statement.

11 SAFETY PRECAUTIONS.

The following safety precautions shall be observed while performing procedures in this manual.

- Some cleaning materials specified herein are flammable and/or toxic. Keep away from open flame or other ignition sources. Provide adequate ventilation and avoid skin/eye exposure.
- Cleaning with compressed air can create airborne particles that may enter eyes or penetrate skin. Pressure shall not exceed 30 Pounds-force per Square Inch, Gauge (PSIG). Wear goggles. Do not direct compressed air against skin.

12 RECOMMENDED PRECAUTIONS.

The following are general safety precautions, not related to any specific procedure and therefore do not appear elsewhere in this publication. These are recommended precautions and instructions that personnel must understand and apply during many phases of operation and maintenance to ensure personal safety and health.

13 PROTECTIVE CLOTHING.

Wear protective clothing (gloves, apron, etc.) approved for the materials and tools being used.

14 SAFETY EQUIPMENT.

When cleaners and primers are being applied, approved equipment shall be used. Make sure firefighting equipment is readily available and in working order. Maintain minimum quantities required to accomplish tasks. Solvents will be contained in approved containers.

CHAPTER 1
MARKING OF SUPPORT EQUIPMENT

1.1 GENERAL.

Support Equipment (SE) will bear the agency marking, model or type number and safety markings and war readiness material markings when applicable.

1.1.1 Marking Illustrations and Legends. Many different model configurations exist for the same types of SE units. The marking illustrations and legends included in this technical manual are for reference use only and will not be updated. Refer to the specific SE Technical Order (TO), Air Force Instructions (AFI), and/or Local Operating Instruction (LOI) for specific marking requirements.

1.2 SAFETY AND SERVICING MARKINGS.

NOTE

Requests for deviation to stenciling/marking requirements in Chapter 1 will be approved at Major Command (MAJCOM) level. Illustrations will be included in requests to identify exact location, size, and color of markings. Should conflict arise between the specific SE TO and this manual, the specific SE TO will take precedence.

1.2.1 National Star Symbol. The National symbol, a five point star, may be applied to support equipment operated by the United States Air Force (USAF) in overseas theaters at the direction of the theater commander.

1.2.2 Marking Requirements.

NOTE

Tone down marking procedures are mandatory Deviations requiring MAJCOM approval.

US Air Force decals, stencils or placards will be installed as required by technical orders for the individual SE unit, safety regulations and/or environmental health regulations.

1.2.2.1 Safety/Danger/Caution/Information/and Agency Identification Markings for Liquid Oxygen (LOX)/nitrogen storage and transfer tanks will be marked in accordance with the instructions in this manual.

1.2.2.2 Danger areas of turbines shall be marked as directed by specific SE technical order data.

1.2.2.3 Other Safety/Danger or Caution/Warning decals or stencils shall be installed as required by safety regulations and/or environmental health directives.

1.2.2.4 Lifting capacities of aircraft jacks and similar lifting devices shall have capacity clearly marked.

1.2.2.5 Warning instructions shall be marked on ground heaters (combustion-type) as shown in Chapter 1.

1.2.2.6 At the option of the local commander, LOX and liquid nitrogen carts/tanks subject to deployment to or already assigned in North Atlantic Treaty Organization (NATO) countries may have the fill and servicing point marked in accordance with Military Standard 33739 (NATO markings). The NATO symbols for fill and servicing points of LOX and liquid nitrogen carts/tanks are as follows:

- LOX carts/tanks: Two horizontal **Fill rectangles**as shown in Figure 1-1.
- Liquid nitrogen carts/tanks: One **Filled square** with quarter arcs removed from corners as shown in Figure 1-2.

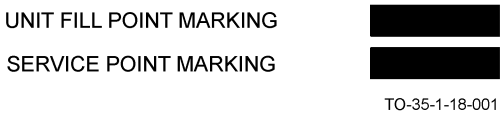

Figure 1-1. NATO LOX Servicing Markings

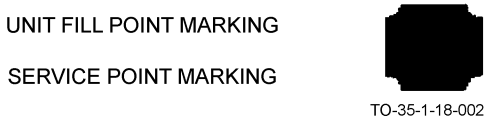

Figure 1-2. NATO Liquid Nitrogen Servicing Markings

1.2.3 Product Identification. Product identification is as follows:

NOTE

Service point marking will be located near the end of the hose that will be attached to the aircraft.

1.2.3.1 Aviation Gasoline (AVGAS) Octane rating and NATO Product identification shall be 4 inch silver reflective letters on purple background placed on front or back portion of filter body, depending on space available.

1.2.3.2 All other product identifications and NATO markings shall be 4 inch silver reflective letters on a red background.

1.2.3.3 Registration number and US Air Force decals shall be placed on rear portion of the filter body if stenciled.

1.2.3.4 Other optional information markings shall be in accordance with the instructions in this manual.

1.2.3.5 Fuel servicing NATO compatibility markings/decals shall be installed as outlined in TO 36-1-191.

1.2.3.6 Special markings for aircraft hydraulic servicing/testing SE are as follows:

1.2.3.6.1 Color/markings to identify hydraulic oil contents will be filler cap painted blue, with MIL-PRF-5606, MIL-PRF-83282, SKYDROL, etc., whichever is applicable, stenciled in 1 inch black letters on filler cap or most conspicuous area adjacent to filler cap.

1.2.3.6.2 Color/markings to identify fuel content shall have the fuel designation (Diesel, MOGAS, JP-5, JP-8, JET-A (F-24), etc.) whichever is applicable. The markings shall be in 1 inch black letters on filler cap or most conspicuous area adjacent to filler cap. All metal filler caps shall be painted the same color as unit. Plastic filler caps will not be painted.

1.2.3.7 Application of NATO marking will be accomplished by stencil or decal as appropriate. The symbol and letters will be black color 37038.

1.2.3.8 Special marking for fuel dispensing equipment, now classified as vehicular SE in Federal Stock Class (FSC) 4930 will include "No Smoking within 50 feet" on front portion of filter body using 3 inch silver reflective letters on a red background or red letters on olive drab or matching unit color (gray/green/ brown) surfaces for tone down equipment.

1.2.4 SE Reflectorization. SE will be reflectorized using black reflective strips 2 inch wide and 6 inches in length conforming to L-S-300C, Type II, Class 1, Reflectivity 2, Durability 1.

1.2.4.1 Tape will identify length, width, and height of unit. Units exceeding 6 feet in length will have the center of unit marked. Distances between edges of reflective tape will not exceed 6 feet and will be equally spaced. Units less than 6 feet in length will have only the top and bottom corners identified. The outermost edges of the unit must be readily identifiable.

1.2.4.2 Use of sound judgment for reflectorization and marking of smaller SE is authorized.

1.2.4.3 Aircraft tow bars have additional reflectorization requirements due to their length. Distance between edges of reflective tape will not exceed 6 feet (72 inches) in length and will be equally placed on both sides of the tow bar.

1.3 AGENCY IDENTIFICATION MARKINGS.

1.3.1 Air Force (AF) Owned - Contractor Operated Equipment. AF owned SE operated by a contractor under terms of a contract with the AF, will be marked in a conspicuous location on both sides of the equipment as follows:

AIR FORCE EQUIPMENT
Operated by
(Name and Address of Contractor)

1.3.2 Mobilized Equipment. All equipment that is required in support of flight line operations, which may be relocated and deployed, based on their assigned mission tasking, will require a mobility placard. These placards can be permanently installed as a local option in accordance with the following assembly instructions and illustrations.

NOTE

- On contractor bailment equipment, the registration number, when applicable, will be stenciled beneath the hood of the equipment. The only other external markings authorized are safety markings and reflectorized markings required for night visibility.
- Placards already installed will remain on the equipment. Place mobility information sheet on the front left corner of the unit. On equipment where this is not feasible or practical, place mobility information sheet in most practical visible location.

1.3.2.1 If computer generated, mobility placards maybe assembled per Table 1-1.

NOTE

When automated/computer generated placards are used then stenciling requirement in Paragraph 1.3.2.2 is optional.

1.3.2.2 Using 1/2 inch black letters, stencil mobility placard with the information in Table 1-2 for open viewing.

NOTE

Use black reflective tape to highlight Transportation Control Number (TCN) areas.

1.3.2.3 Stencil the mobility placard as follows. Folded View (refer to Figure 1-3).

- Use 1/2 inch black letters centered on the placard.
- USAF
- Unit organization
- Model number

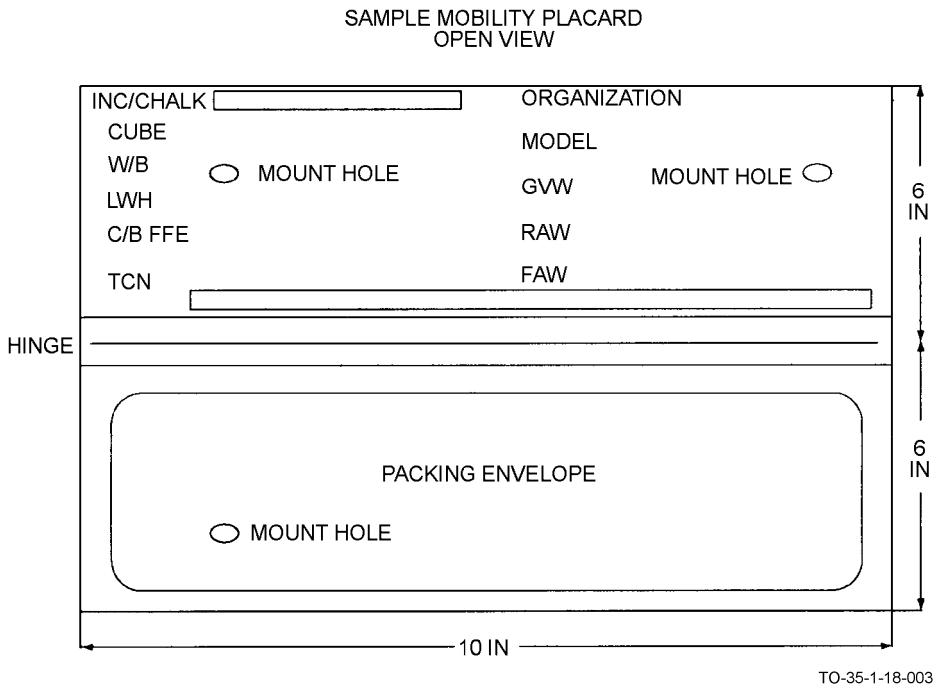

Figure 1-3. Sample Mobility Placard

Table 1-1. Mobility Placard Construction Information

	Placard Assembly Instructions
a.	Assemble placard by connecting two-each 1/8 x 10 x 6 inch pieces of sheet metal with a piano hinge.
b.	Drill 1/4 inch diameter mount holes 2 inches down from the top and 2 inches in from each side of the sheet metal placard.
c.	Drill 1/4 inch diameter hole 2 inches from the left side and 2 inches up from bottom of placard.
d.	Paint for placard will be the same color as the paint applied to unit.
e.	Mount placard to unit by using 1/4 inch bolts, washers, and nuts. Use a longer bolt for the left side to secure placard in the folded position.

Table 1-2. Mobility Placard Stencil Requirements

	Placard Stencil Instructions
a.	INC: (Increment) 1/4 inch from top and 1/4 inch from the placard side. Highlight the area using 1/2 inch black reflective tape. Start from INC to the middle of placard.
b.	CUBE: 1/4 inch from side and 1/8 inch from bottom of highlighted chalk area. All other stencils will have 1/8 inch line spacing between them.
c.	W/B: Wheelbase.

Table 1-2. Mobility Placard Stencil Requirements - Continued

	Placard Stencil Instructions
d.	LWH: Length x width x height.
e.	CB FFE: Center of balance from front end.
f.	TCN: Transportation control number.
g.	ORGANIZATION STENCIL: Start at middle of placard 1/8 inch from top.
g.	MODEL NUMBER: Example: A/M32A-86D.
i.	GVW: Gross axle weight in pounds as certified by the Transportation Management Office (TMO) with approximately 1/2 tank of fuel. NOTE: As the actual fuel quantity is approximated the GVW will not be stenciled on the placard. The GVW will remain blank and the GVW will be written-in by the appropriate official after weight checks.
j.	RAW: Rear axle weight in pounds.
k.	FAW: Front axle weight in pounds.
l.	PACKAGE ENVELOPE: Attach to bottom of placard.

1.4 INFORMATIONAL MARKINGS (OPTIONAL).

Instructions that would aid in the operation and prevent potential damage to equipment may be applied to units without instruction plates. The instructions will be held to a minimum and will not exceed those specified in the applicable equipment TO. Marking will be of the smallest readily readable size.

1.5 COLOR, STYLE AND SIZE OF MARKINGS.

1.5.1 Use of Reflective Tape, Decals, and Vinyl Lettering. Use reflective tape and vinyl stencils (vinyl machine National Stock Number (NSN) 3417-01-247-8063 or equivalent) in lieu of spray painted stencils is highly encouraged.

1.5.1.1 Decals and/or vinyl lettering is specially prepared plastic film containing designs, words, numerals or colored marking stripes, which may be applied or attached to AF equipment as a method of marking or identification. The decals maybe locally manufactured using equipment such as Gerber Sign Maker or equivalent or commercially procured.

1.5.1.2 The use of local manufacture or commercial acquired decals and/or vinyl markings is encouraged as a substitute for paint stencil to reduce the use of aerosol paint systems in the AF.

1.5.1.3 Commercial or locally manufactured decals or lettering shall be manufactured from exterior grade, dimensionally stable material procured in the appropriate colors and gloss equivalent to SAE-AMS-STD-595 color requirements. Matte/flat colored vinyl material shall be used on semi-gloss or flat finished SE. Gloss vinyl material shall be used on gloss-finished equipment. Commercially procured decals shall conform to AA-59485. The preferred local manufacture vinyl decal/lettering material is Gerber High Performance Series 220 Premium Film, 3M ScotchcalTM ElectrocutTM Film Series 7725 or equivalent.

1.5.1.4 Safety/Danger/Warning stencils will be non-reflective red.

1.5.1.5 Caution/Informational stencils will be non-reflective black.

1.5.1.6 Decals/vinyl markings are not authorized on unpainted surfaces as possible concentration cell corrosion may occur.

1.5.1.7 Unless otherwise directed in this manual, follow the material manufacturer's directions on application and removal of the marking material.

1.5.1.8 Use of pneumatic drill and 3M Rubber Wheel, Part Number (PN) 07498, is authorized as an alternate decal removal method.

1.5.2 Field Numbers. MAJCOMS have the option to use white or black letters for field numbers. Field numbers will be 4 inch letters unless smaller size lettering is required due to limited space. Location will be all four sides, upper right corners or where practical.

1.5.3 USAF Legends. When US Air Force legends are used, the background color will be the same as color of the equipment on which it is being applied. Color of letters will be black in one of the below sizes. USAF may be used in lieu of U.S. AIR FORCE.

1.5.4 Color Numbers. The colors listed in this TO are based on SAE-AMS-STD-595, Colors Used in Government Procurement. Commanders are encourage to maintain marking colors as near the indicated shade as possible, but should not delay marking for lack of particular color shade. Also, when marking camouflaged SE, deviation from glossy colors is authorized.

1.5.5 Markings Size. Block-type letters and numerals of 1/2, 1, 1-1/2, 2, 3, or 4 inch size will be used for marking unless otherwise specified, the size selected shall be the largest practicable size in the available space consistent with good appearance and visibility.

1.5.6 Tire Pressure/Tow Speed. If conflict should arise between end item technical order/inspection work cards and TO 35-1-3 regarding tire pressure and max tow speed, then the applicable end item TO/Work Card (WC) takes precedence. For stenciling purposes, **T.P.** is authorized in place of **Tire Pressure**. If maximum tow speed is not called out in end item TO/WC then contact the local Safety Office for guidance.

1.6 MAINTENANCE OF MARKINGS.

1.6.1 Markings Removal. Markings should be maintained on all units of equipment at all times, except as follows:

- Upon transfer from the USAF, all markings except registration numbers will be removed.
- Upon permanent transfer to disposal agencies or upon sale to commercial contractors, AF marking will be obliterated or removed.
- Upon transfer to Military Assistance Program (MAP), all AF markings will be removed.

1.6.2 National Guard Decalcomania. The use of the Air National Guard decalcomania on SE is optional at the discretion of the local base detachment commander.

CHAPTER 2
MAINTENANCE OF MARKINGS

2.1 CAUTION/WARNING MARKINGS.

2.1.1 Pintle Hook Caution Marking. Near pintle hooks (if space is available), stencil in 1/2 inch letters the following before towing, latch pintle, close trip lock and install lockpin. On Support Equipment (SE) using pintle pins stencil: **Before towing, install pintle pin and insert safety pin.**

2.1.2 Spring Loaded Warning Marking. Organizations with spring-loaded draw, tow bars, or other equipment will have **Warning Spring Loaded** stenciled (1 inch RED) on conspicuous area. Decal may be used in lieu of stenciling.

2.1.3 Aircraft Tow bar Caution Marking. On top of aircraft tow bars, just aft of the lunette eye and/or handle, add a stencil or decal which states: **CAUTION: Do not allow tow bar to contact tow vehicle.**

2.1.4 Tire Pressure/Tow Speed Markings. Should conflict arise between Technical Orders (TO)/Work Cards (WC) and this TO regarding tire pressure and the tow speed, then the applicable end item TO/WC take precedence. For stenciling purposes, **TP** is authorized in place of **tire pressure**. If tow speed is not called out in end item TO/WC, then contact the local Safety Office for guidance.

2.1.5 Personnel Static Discharge Marking. When mobile work platforms are used in operations such as fuel cell repair or refueling vehicle maintenance where static electricity is hazardous the platform shall comply with the requirements of Air Force Instruction (AFI) 91-203, TO 00-25-172, and other applicable instructions. Refer to TO 1-1-3 for detailed marking instructions of maintenance stands used during fuel cell maintenance.

2.2 FUEL CELL REPAIR SE IDENTIFICATION.

Fuel cell repair SE complying with the requirements of TO 1-1-3 will be painted, marked, and reflectorized with the same colors and in the same manner as the activity's other flight line SE. Commands at their option may add secondary identification markings consisting of bands two inches wide. These bands will be applied with either tape or paint that is compatible with the painted surface and of a contrasting color.

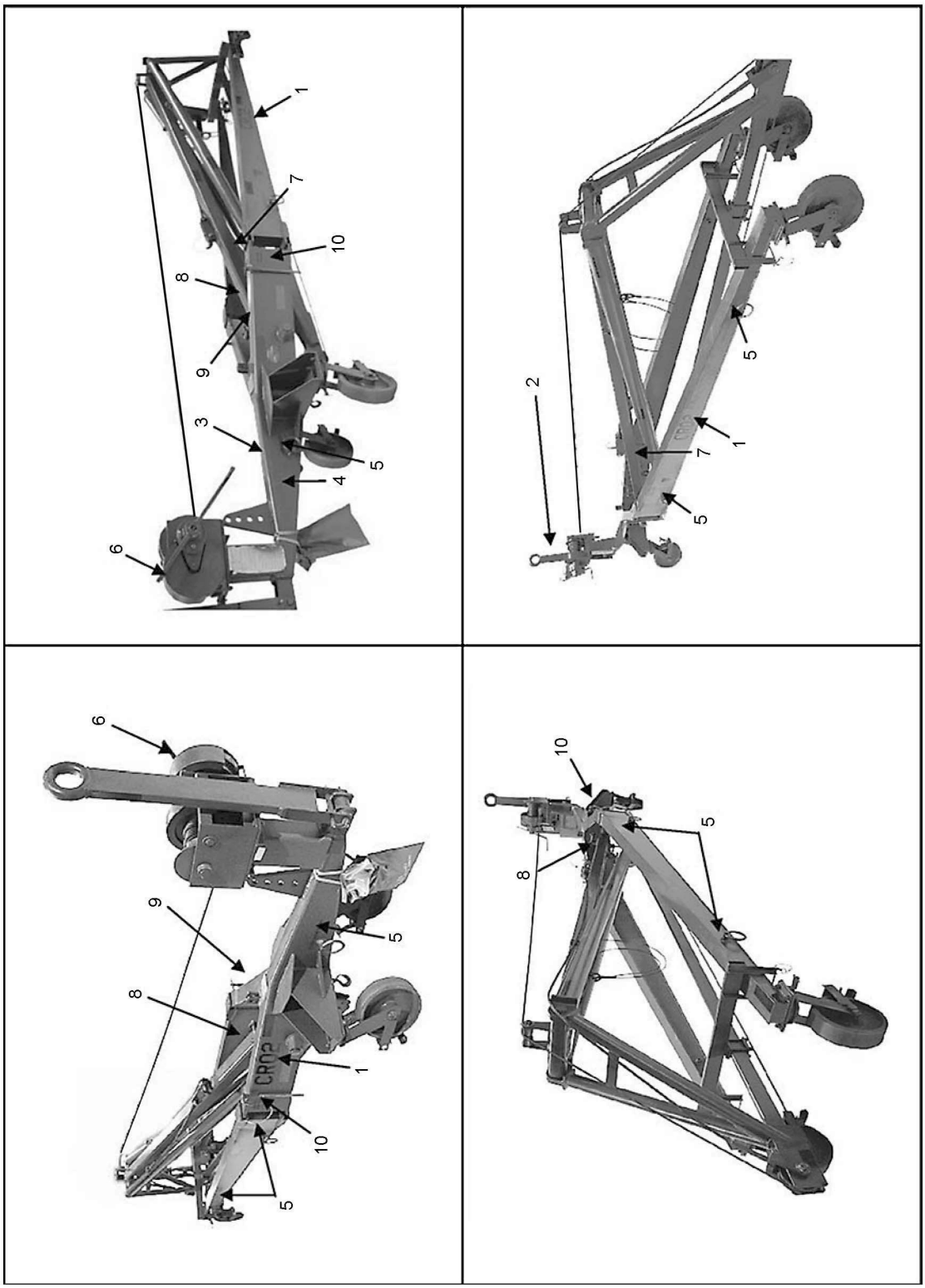

TO-35-1-18-004

Figure 2-1. 1,500 Pound Utility Crane

Legend for Figure 2-1			
Index Number (No.)	Markings	Size	Color*
1	Field numbers	4 inch	Black
2	Maximum tow speed 10 Miles Per Hour (MPH)	1 inch	Black
3	Maximum crane cap 1,500 pounds	1 inch	Black
4	Warning: 2 people required to raise or lower crane	1 inch	Red
5	Tiedown 5,000 pound capacity	1/2 inch	Black
6	Warning: Always maintain a minimum of 4 wraps on drum	1/2 inch	Red
7	Attach hook to eyelet	1 inch	Black
8	Warning: Do not return positioning cable to the stowed position before mating boom to mast	1/2 inch	Red
9	Warning: Do not remove mast lockpin until boom is folded and secured to mast	1/2 inch	Red
10	Lockpin storage	1/2 inch	Black
* - Standard caution/informational marking color will be non-reflective black. Standard safety/warning marking color will be non-reflective red.			

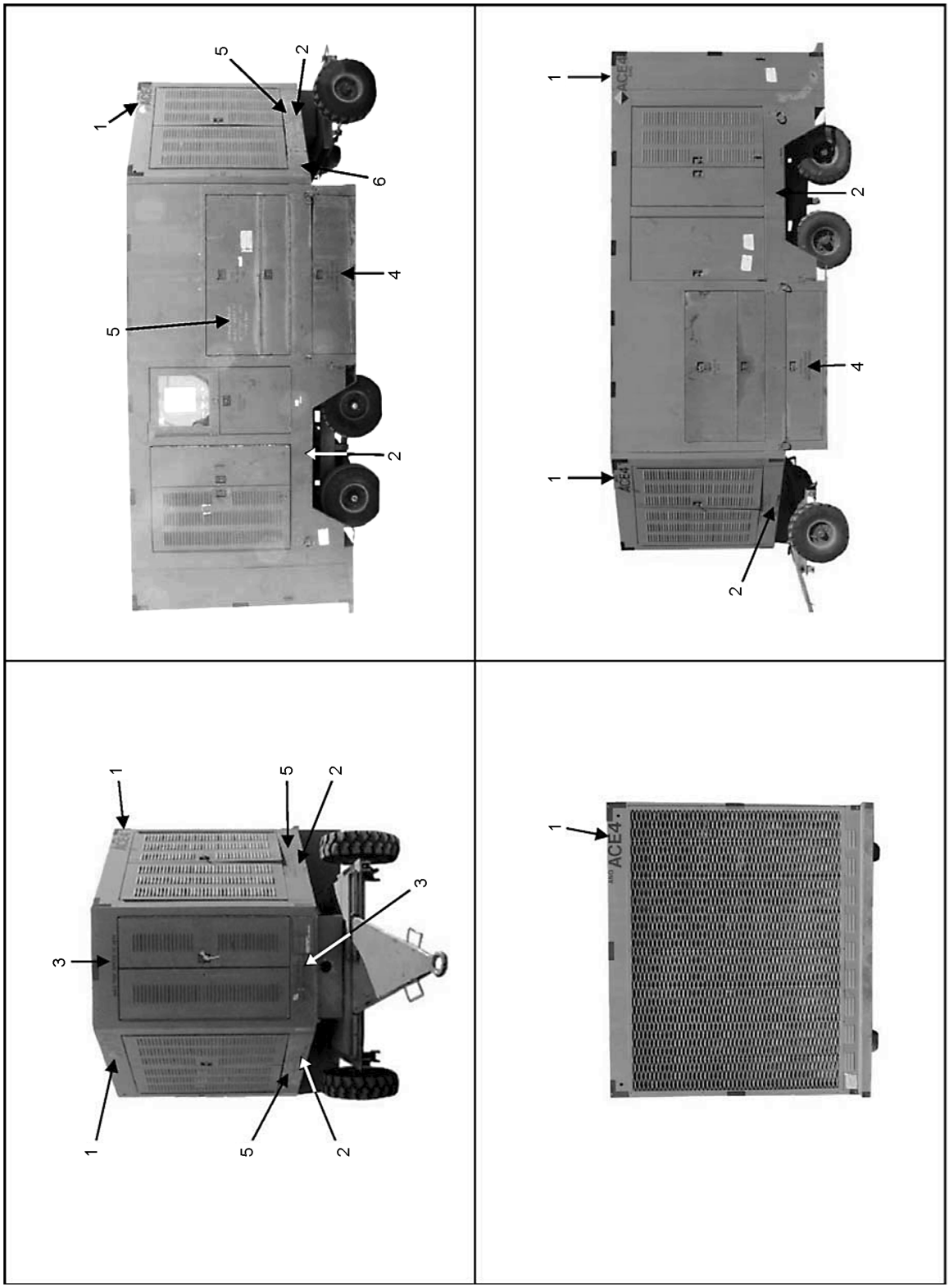

TO-35-1-18-005

Figure 2-2. ACE Air Conditioner MC1A, Diesel

Legend for Figure 2-2			
Index No.	Markings	Size	Color*
1	Field numbers	4 inch	Black
2	Tire pressure XX Pound-force per Square Inch (PSI)	1/2 inch	Black
3	Maximum tow speed 10 MPH	1/2 inch	Black
4	Caution: Close doors before towing	1/2 inch	Black
5	Warning: Turn air shut-off valve off before performing maintenance	1 inch	Red
6	Diesel or JP-8	1 inch	Black
* - Standard caution/informational marking color will be non-reflective black. Standard safety/warning marking color will be non-reflective red.			

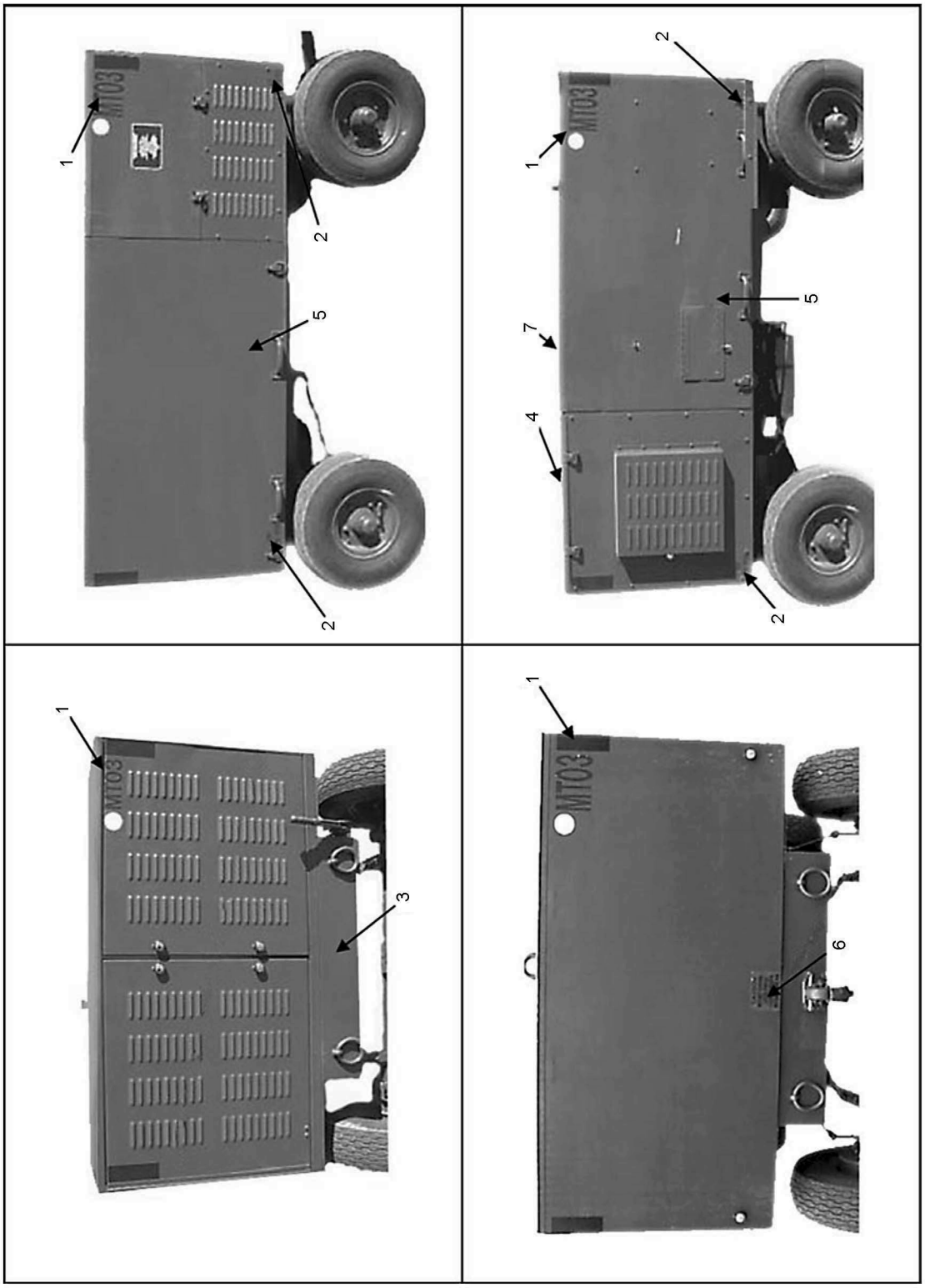

TO-35-1-18-006

Figure 2-3. AF/M27M-1 Pumping Unit, Hydraulic, Diesel Driven

Legend for Figure 2-3			
Index No.	Markings	Size	Color*
1	Field numbers	4 inch	Black
2	Tire pressure XX PSI	1/2 inch	Black
3	Maximum tow speed 15 MPH	1/2 inch	Black
4	Caution: Doors must be open during operation (Top engine door)	1 inch	Black
5	Do not forklift	1/2 inch	Black
6	Caution: Before towing, latch pintle, close triplock, install lockpin	1/2 inch or decal Part Number (PN) 3613506	Black
7	JP-8 (Close proximity to fuel cap)	1 inch	Black
8**	MIL-XXXX (Mark with applicable MIL-SPEC fluid. Stencil will be in close proximity to hydraulic servicing cap)	1 inch	Black
* - Standard caution/informational marking color will be non-reflective black. Standard safety/warning marking color will be non-reflective red.			
** - Marking location not displayed.			

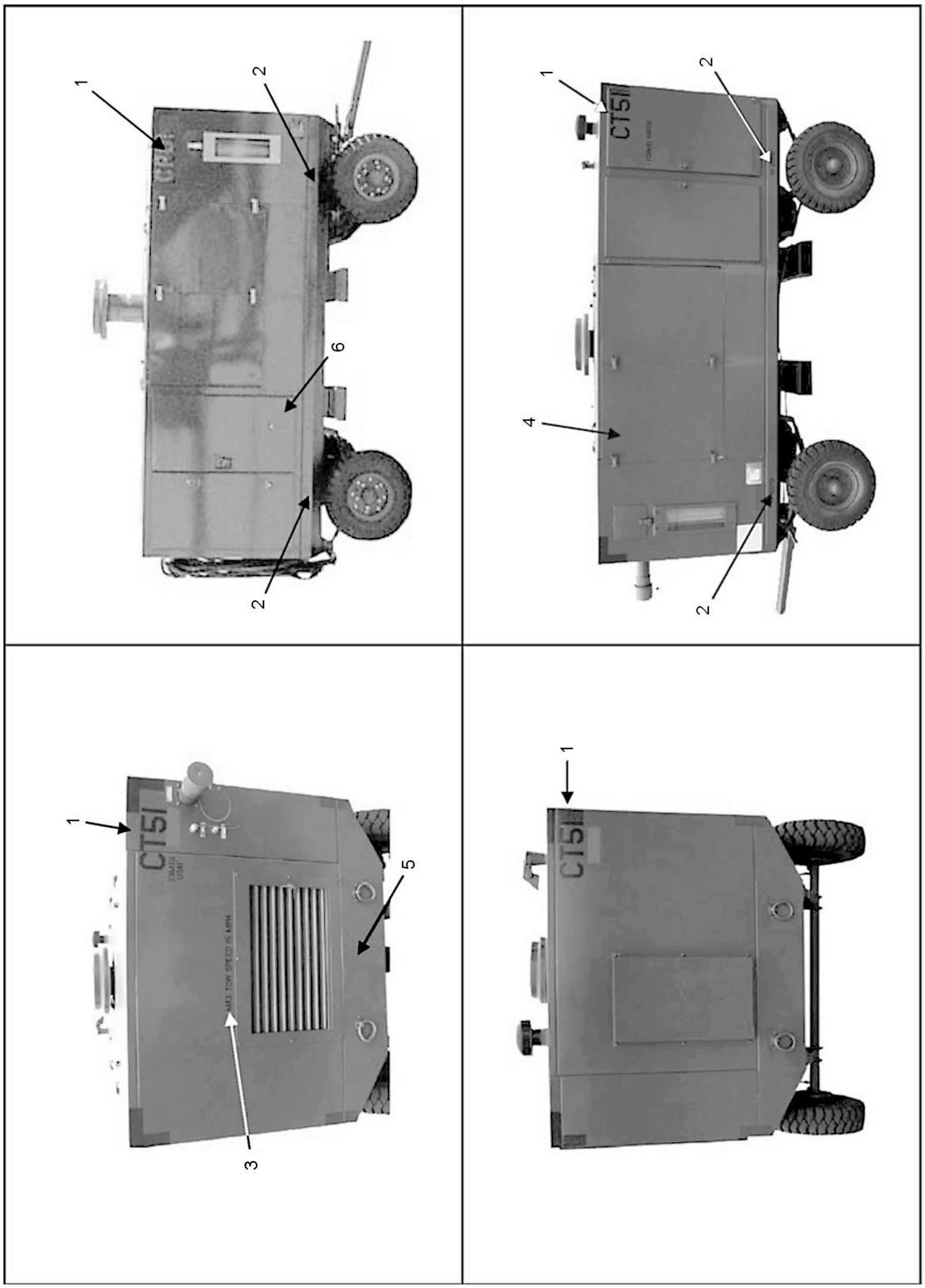

TO-35-1-18-007

Figure 2-4. AF/M32T-1 Cabin Leakage Tester

Legend for Figure 2-4			
Index No.	Markings	Size	Color*
1	Field numbers	4 inch	Black
2	Tire pressure XX PSI	1/2 inch	Black
3	Maximum tow speed 15 MPH	1/2 inch	Black
4	Control panel	1/2 inch	Black
5	On brake off	1/2 inch	Black
6	JP-8 fuel filler inside	1 inch	Black
* - Standard caution/informational marking color will be non-reflective black. Standard safety/warning marking color will be non-reflective red.			

NOTE

Figure 2-4 includes views of various models of the AF/M32T-1 cabin leakage tester.

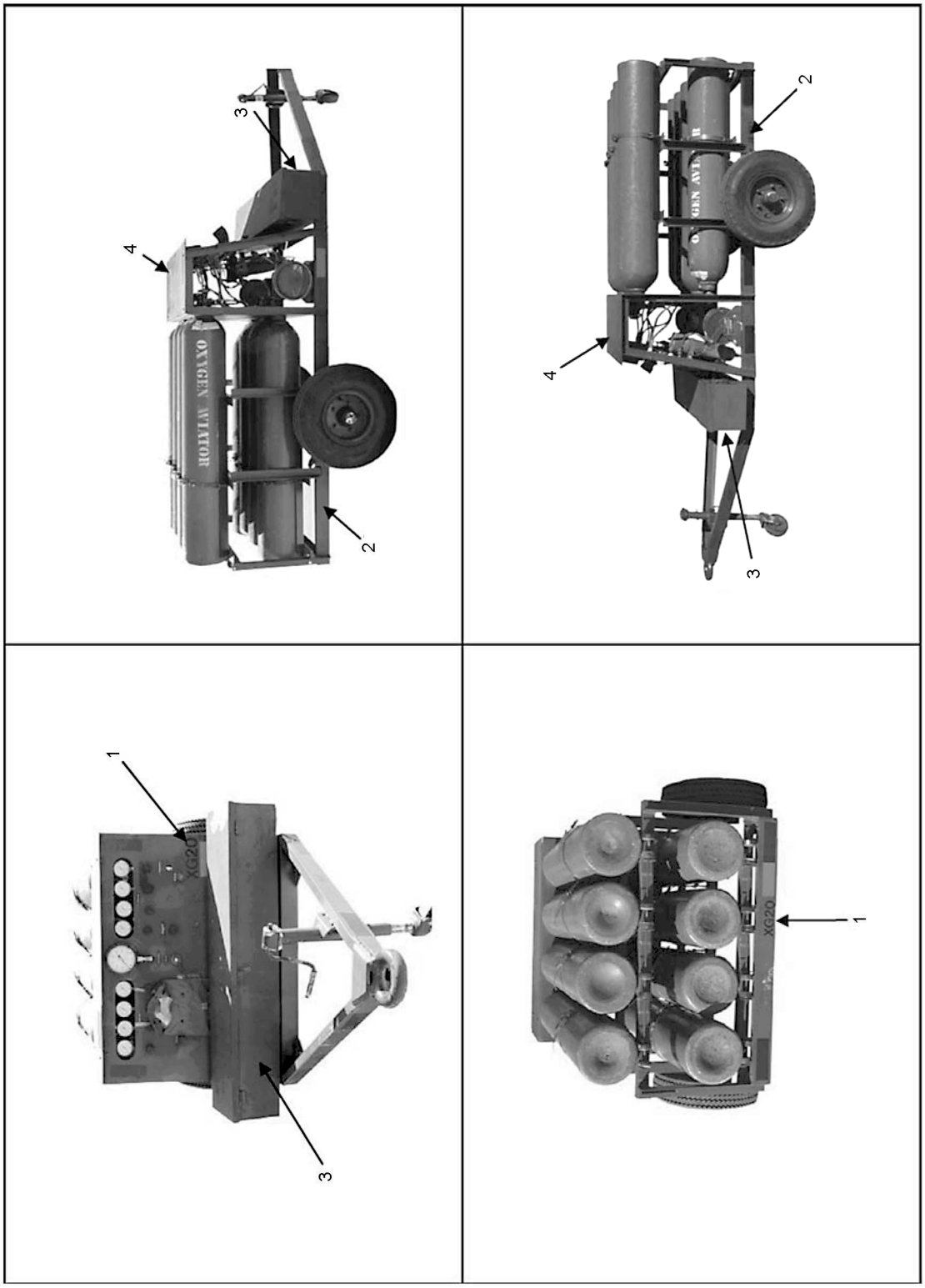

TO-35-1-18-008

Figure 2-5. Aircraft Oxygen Servicing Cart

Legend for Figure 2-5			
Index No.	Markings	Size	Color*
1	Field numbers	4 inch	Black
2	Tire pressure XX PSI	1/2 inch	Black
3	Maximum tow speed 15 MPH	1/2 inch	Black
4	Oxygen no smoking	1 inch	Red
* - Standard caution/informational marking color will be non-reflective black. Standard safety/warning marking color will be non-reflective red.			

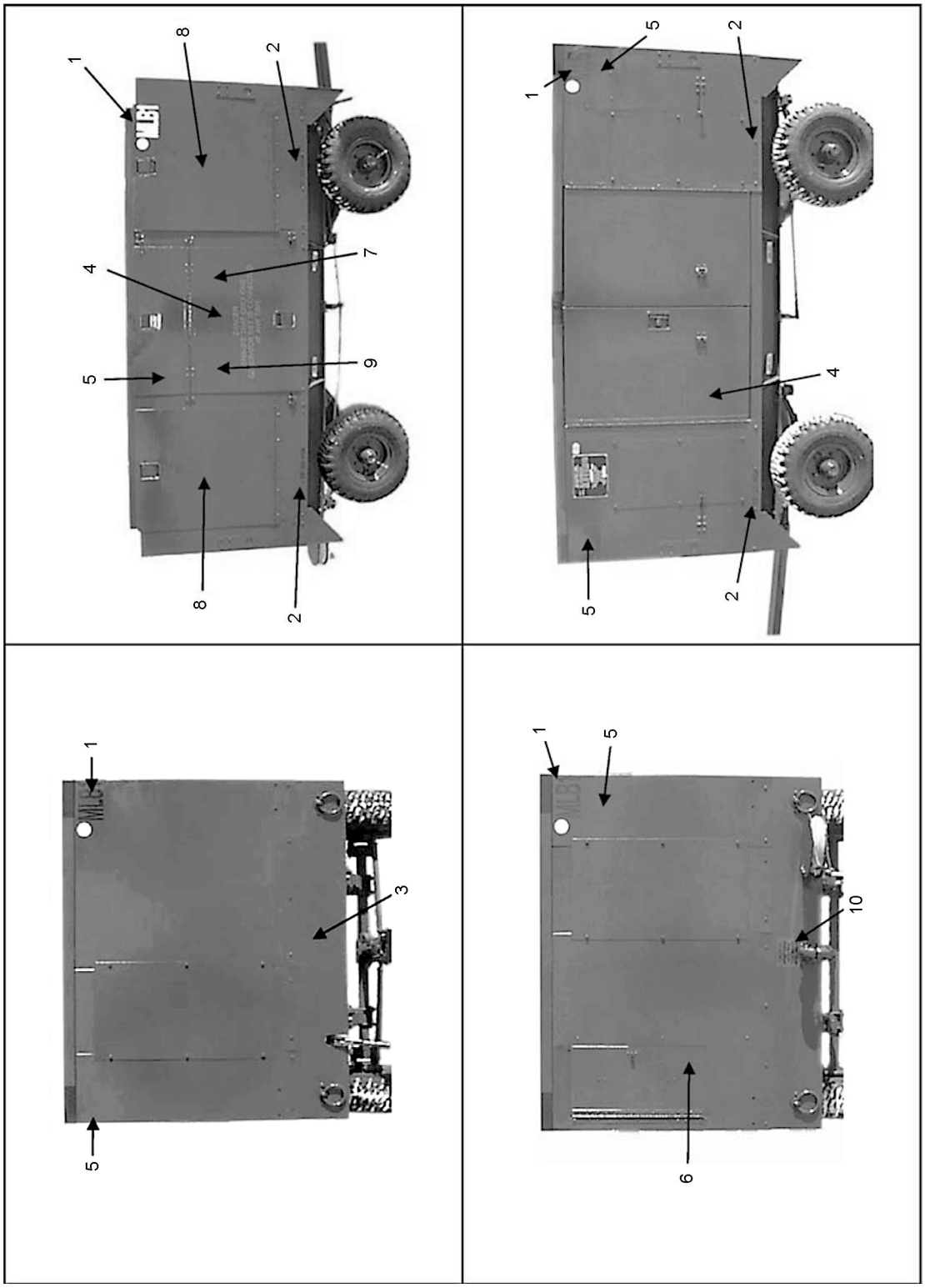

TO-35-1-18-009

Figure 2-6. A/M24T-8 Load Bank

Legend for Figure 2-6			
Index No.	Markings	Size	Color*
1	Field numbers	4 inch	Black
2	Tire pressure XX PSI	1/2 inch	Black
3	Maximum tow speed 15 MPH	1/2 inch	Black
4	Danger: Ensure that only one generator set is connected at any time	1 inch	Red
5	Danger: High voltage 440 Volts (V)	1/2 inch or decal	Red
6	Fire EXT inside	1/2 inch	Black
7	Warning: Keep panel down during operation	1/2 inch	Red
8	Caution: Door must be open during operation	1/2 inch	Black
9	Warning: Keep panel down during operation. Do not make connections, disconnections or changes to input receptacles or terminals while power is applied	1/2 inch or decal	Red
10	Caution: Before towing, latch pintle, close triplock, install lockpin	1/2 inch or decal PN 3613506	Black
* - Standard caution/informational marking color will be non-reflective black. Standard safety/warning marking color will be non-reflective red.			

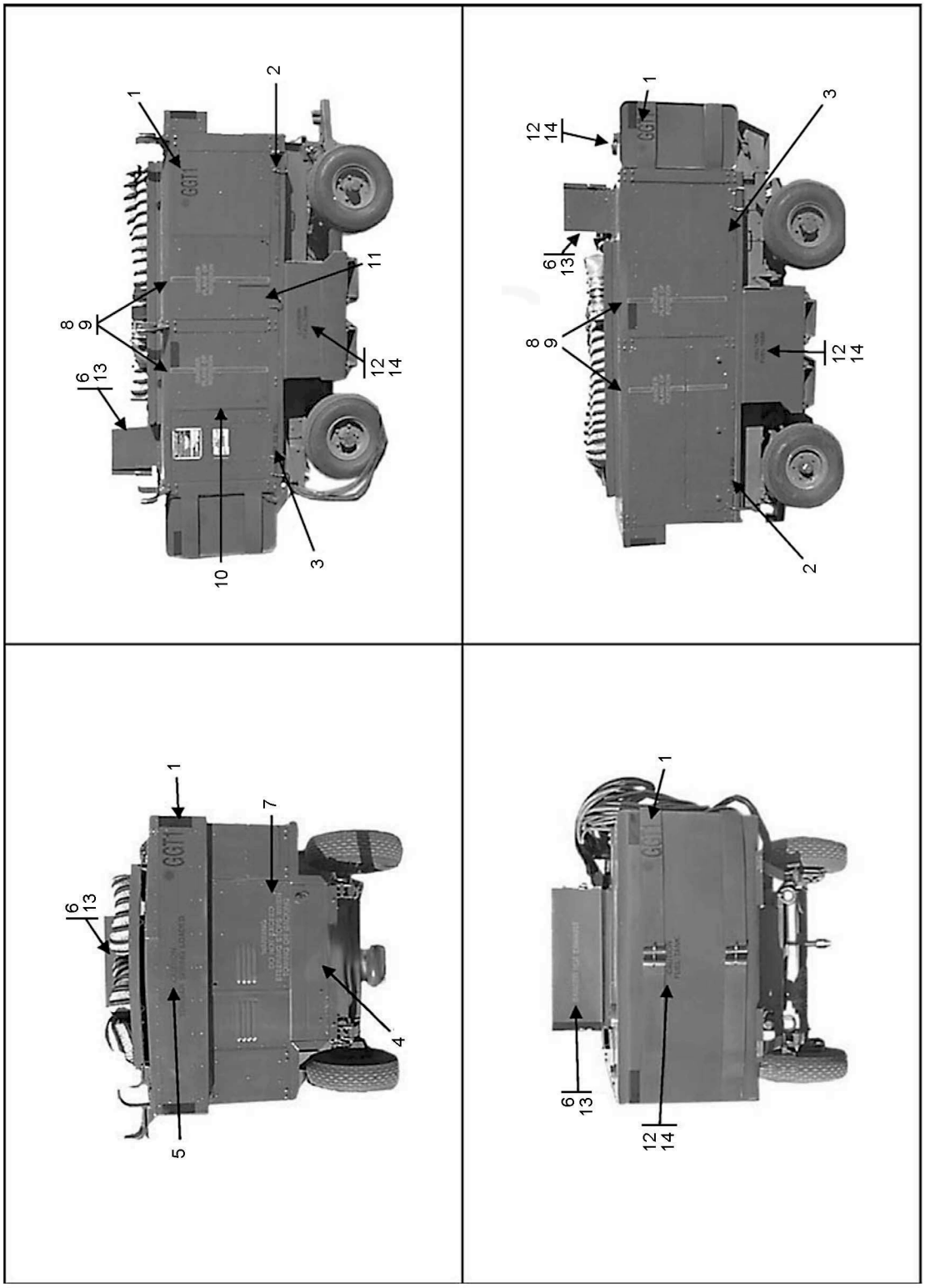

TO-35-1-18-010

Figure 2-7. A/M32A-60A Gas Turbine Generator

Legend for Figure 2-7			
Index No.	Markings	Size	Color*
1	Field numbers	4 inch	Black
2	Front tire pressure XX PSI	1/2 inch	Black
3	Rear tire pressure XX PSI	1/2 inch	Black
4	Maximum tow speed 15 MPH	1/2 inch	Black
5	Warning: Tow bar spring loaded	1 inch	Red
6	Danger: Hot exhaust	1 inch	Red
7	Caution: Do not exceed steering stops when towing or backing	1 inch	Black
8	Danger: Plane of rotation	1 inch or decal	Red
9	Stripe	1 inch	Red
10	Emergency fuel shut-off valve inside	1 inch	Red
11	JP-8 fuel filler inside	1 inch	Black
12	Warning: Use vented fuel caps only	1 inch	Red
13	Do not operate unit unless top cover is open and latched	1 inch	Black
14	Caution: Fuel tank	1/2 inch	Black
* - Standard caution/informational marking color will be non-reflective black. Standard safety/warning marking color will be non-reflective red.			

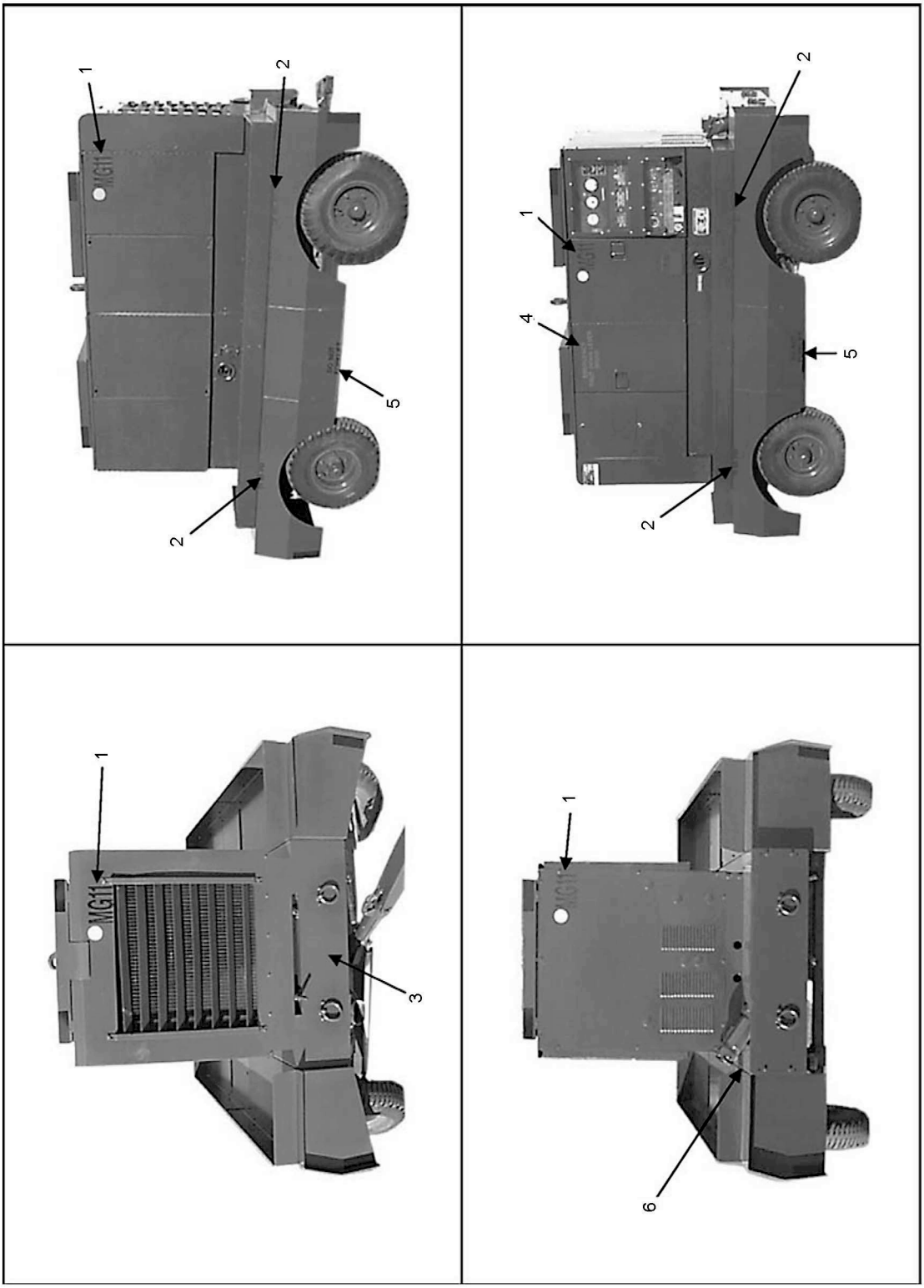

TO-35-1-18-011

Figure 2-8. A/M32A-86 Generator, Diesel

Legend for Figure 2-8			
Index No.	Markings	Size	Color*
1	Field numbers	4 inch	Black
2	Tire pressure (Refer to workcard TO 35C2-3-1-426WC-4-20-1)	1/2 inch	Black
3	Maximum tow speed 15 MPH	1/2 inch	Black
4	Emergency shutdown lever inside	1 inch	Red
5	Do not forklift	1/2 inch	Black
6**	JP-8	1 inch	Black
* - Standard caution/informational marking color will be non-reflective black. Standard safety/warning marking color will be non-reflective red.			
** - Stencil in close proximity to the fuel tank filler neck.			

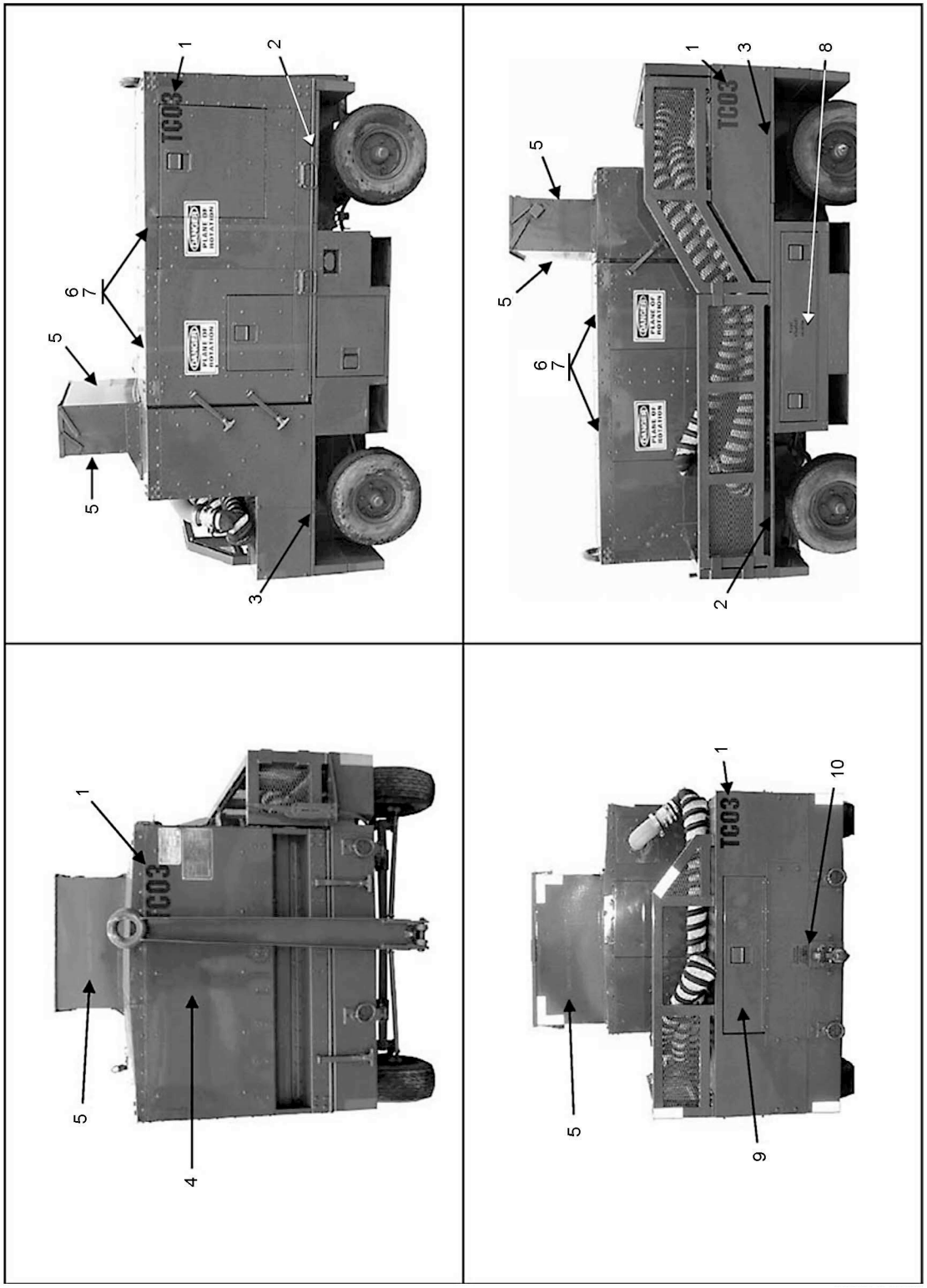

TO-35-1-18-012

Figure 2-9. A/M32A-95 Compressor, Gas Turbine, Trailer Mounted

Legend for Figure 2-9			
Index No.	Markings	Size	Color*
1	Field numbers	4 inch	Black
2	Front tire pressure XX PSI	1/2 inch	Black
3	Rear tire pressure XX PSI	1/2 inch	Black
4	Maximum tow speed 15 MPH	1/2 inch	Black
5	Danger: Hot exhaust	1 inch	Red
6	Danger: Plane of rotation	1 inch or decal	Red
7	Stripe	1 inch	Red
8	Emergency fuel shut-off inside	1 inch	Red
9	JP-8 fuel filler inside	1 inch	Black
10	Caution: Before towing, latch pintle, close triplock, install lockpin	1/2 inch or decal PN 3613506	Black
* - Standard caution/informational marking color will be non-reflective black. Standard safety/warning marking color will be non-reflective red.			

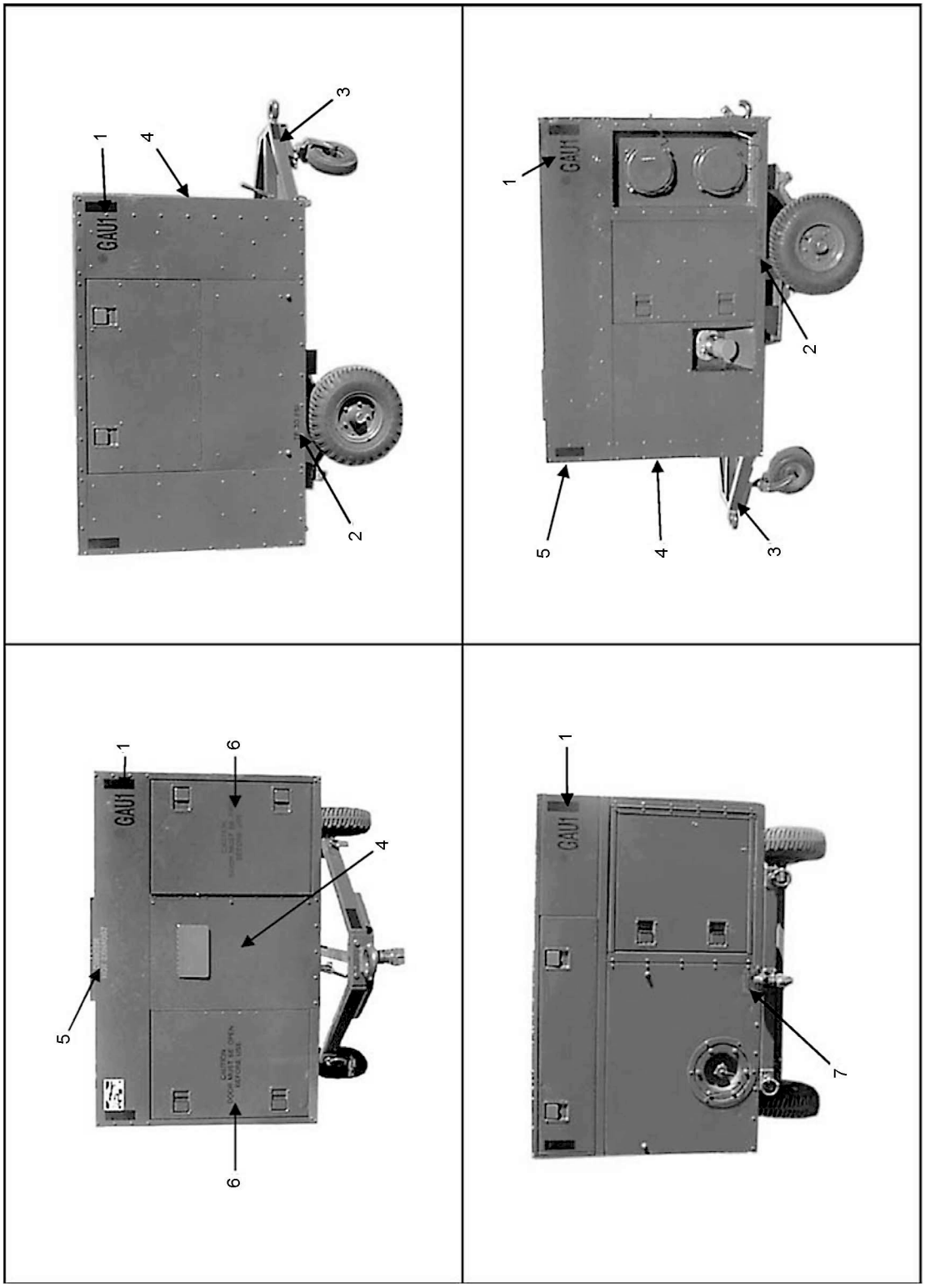

TO-35-1-18-013

Figure 2-10. A/M32C-10C/10D Air Conditioner Set

Legend for Figure 2-10			
Index No.	Markings	Size	Color*
1	Field numbers	4 inch	Black
2	Tire pressure XX PSI	1/2 inch	Black
3	Front tire pressure XX PSI	1/2 inch	Black
4	Maximum tow speed 15 MPH	1/2 inch	Black
5	Danger: Hot exhaust	1 inch	Red
6	Caution: Door must be open before use	1 inch	Black
7	Caution: Before towing, latch pintle, close triplock, install lockpin	1/2 inch or decal PN 3613506	Black
* - Standard caution/informational marking color will be non-reflective black. Standard safety/warning marking color will be non-reflective red.			

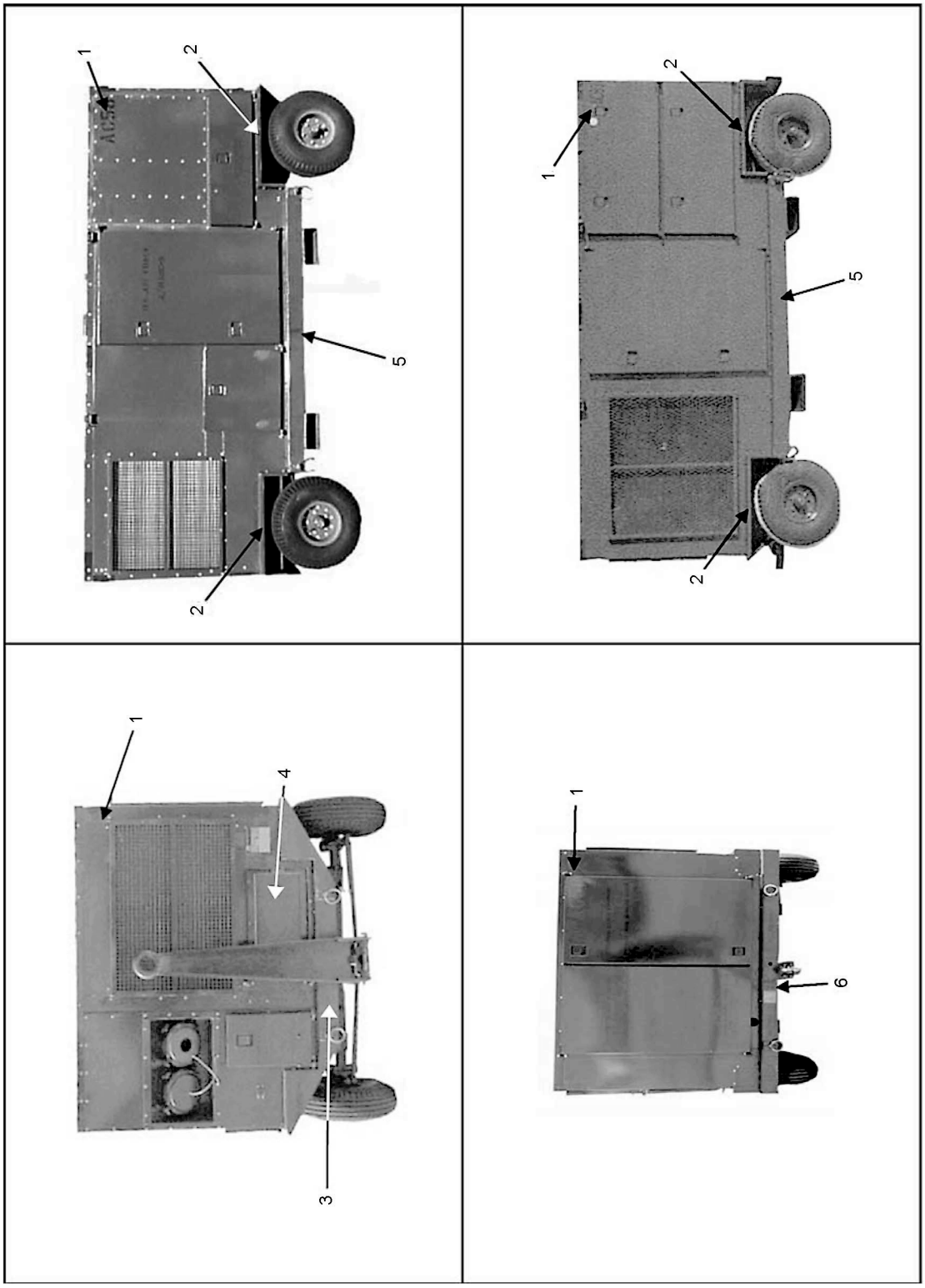

TO-35-1-18-014

Figure 2-11. A/M32C-5 Air Conditioner Set

Legend for Figure 2-11			
Index No.	Markings	Size	Color*
1	Field numbers	4 inch	Black
2	Tire pressure XX PSI	1/2 inch	Black
3	Maximum tow speed 15 MPH	1/2 inch	Black
4	Caution: Door must be open before operating air conditioner	1/2 inch	Black
5	Caution: Use cable guides and hoist rings when hoisting	1/2 inch	Black
6	Caution: Before towing, latch pintle, close triplock, install lockpin	1/2 inch or decal PN 3613506	Black
* - Standard caution/informational marking color will be non-reflective black. Standard safety/warning marking color will be non-reflective red.			

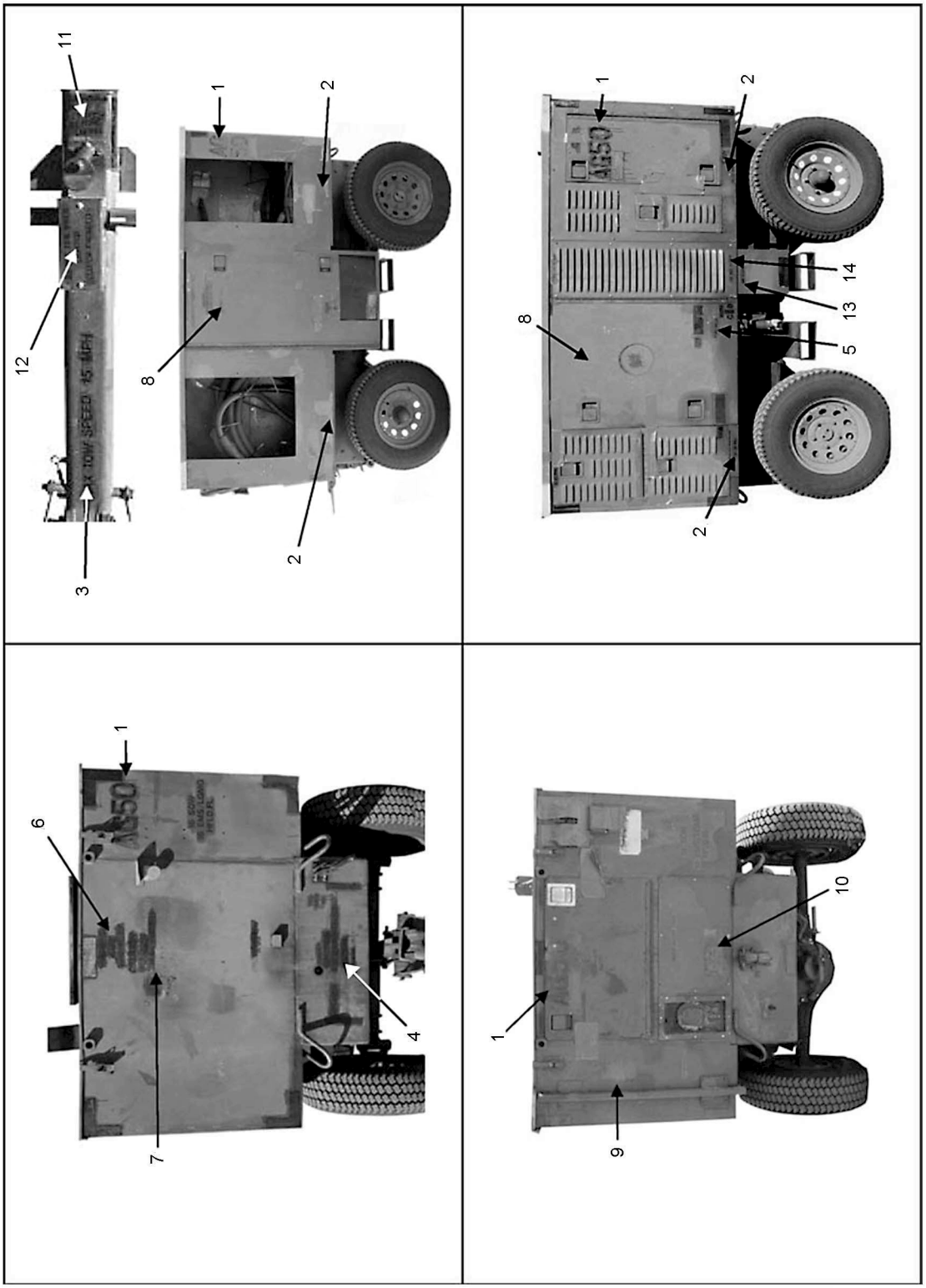

TO-35-1-18-015

Figure 2-12. Auxiliary Ground Power Unit (AGPU)

Legend for Figure 2-12			
Index No.	Markings	Size	Color*
1	Field numbers	4 inch	Black
2	Tire pressure XX PSI	1/2 inch	Black
3	Maximum tow speed 15 MPH	1/2 inch	Black
4	Caution: Do not exceed turning radius	1/2 inch	Black
5	Fuel valve	1/2 inch	Black
6	Danger: Hot exhaust	1 inch	Red
7	Caution: Towing spring loaded	1 inch	Black
8	Caution: Do not use electric hand tools	1/2 inch	Black
9	Warning: Do not position exhaust under helicopter blades	1/2 inch	Red
10	Caution: Before towing, latch pintle, close triplock, install lockpin	1/2 inch or decal PN 3613506	Black
11	Disengage drive clutch before towing	1/2 inch	Black
12	Do not tow when lighted clutch engaged	1/2 inch	Black
13	Air cleaner	1/2 inch	Black
14	Do not block	1/2 inch	Black
* - Standard caution/informational marking color will be non-reflective black. Standard safety/warning marking color will be non-reflective red.			

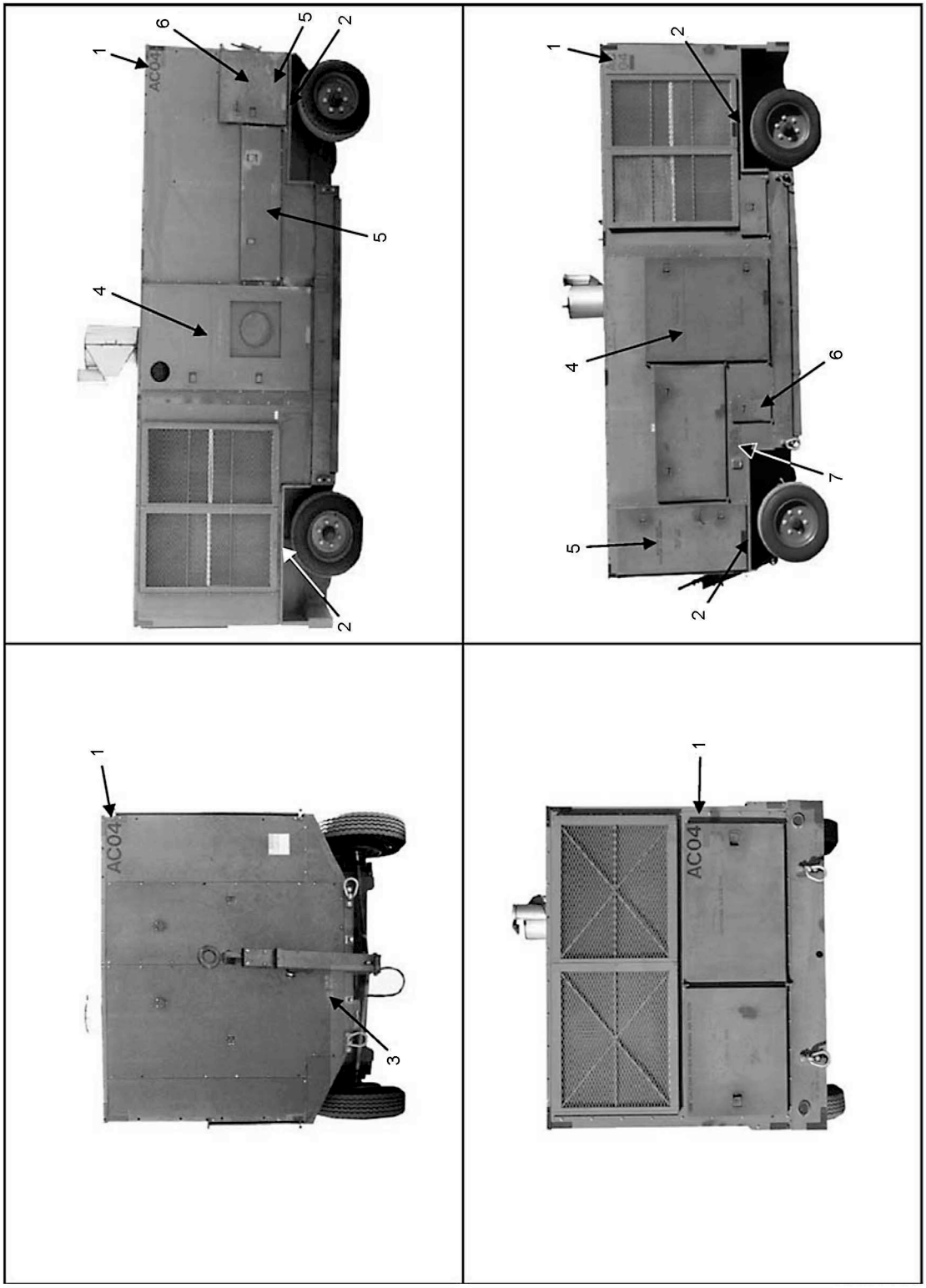

TO-35-1-18-016

Figure 2-13. B-1/B-2 Air Conditioner, Trailer Mounted

Legend for Figure 2-13			
Index No.	Markings	Size	Color*
1	Field numbers	4 inch	Black
2	Tire pressure XX PSI	1/2 inch	Black
3	Maximum tow speed 15 MPH	1/2 inch	Black
4	Warning: Do not operate with door open	1 inch	Red
5	Open door before operating air conditioner	1/2 inch	Black
6	JP-8 fuel filler inside	1 inch	Black
7	External power receptacles for immersion heaters 110 Volts Alternating Current (VAC)/60/1 phase	1/2 inch	Black
* - Standard caution/informational marking color will be non-reflective black. Standard safety/warning marking color will be non-reflective red.			

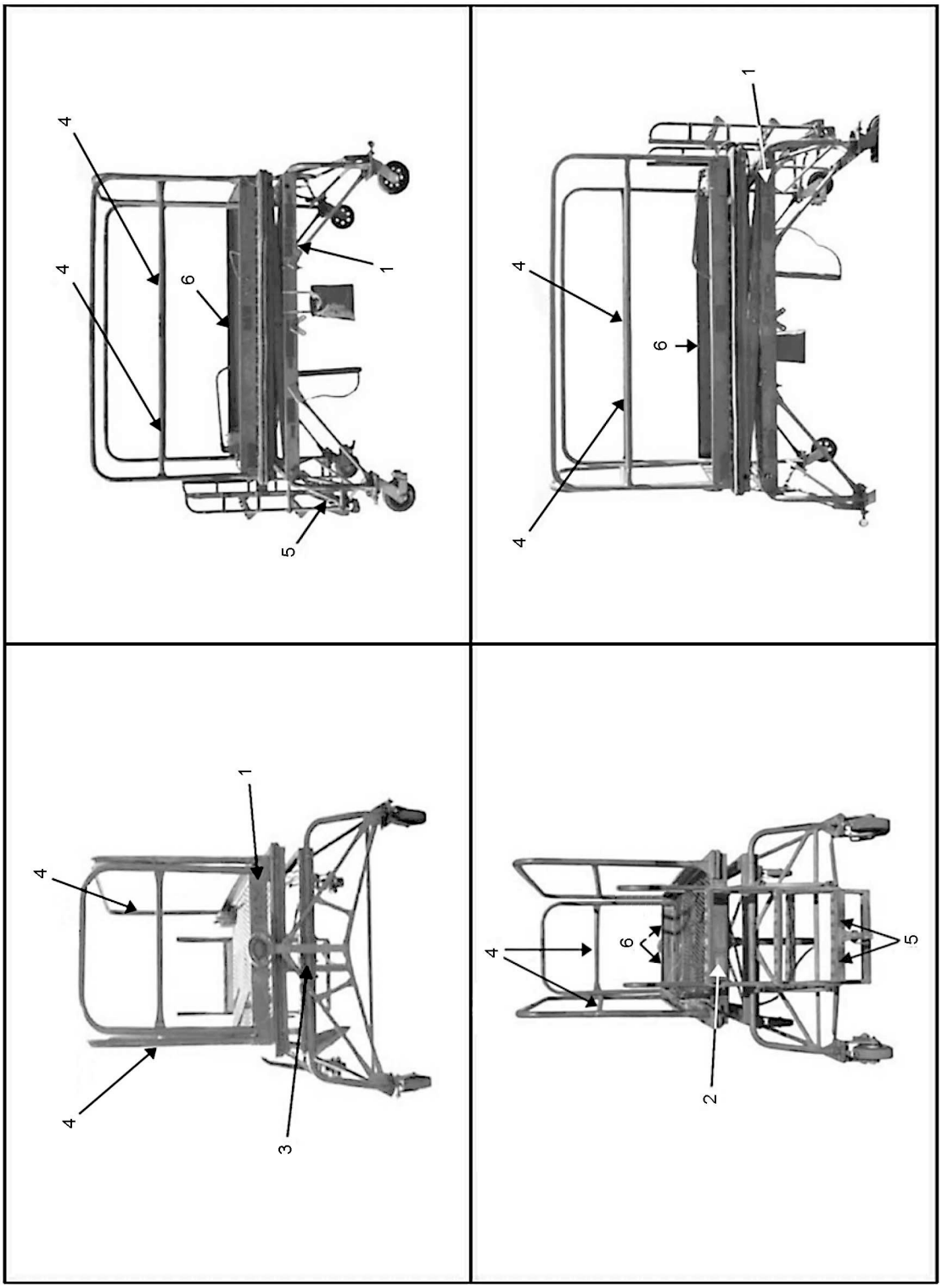

TO-35-1-18-017

Figure 2-14. B-4 Maintenance Stand

Legend for Figure 2-14			
Index No.	Markings	Size	Color*
1	Field numbers	3 inch	Black
2	Warning: Do not operate stand while standing on ladder - capacity 500 pounds	1/2 inch or decal PN 51B24895	Red
3	Maximum tow speed 5 MPH	1/2 inch	Black
4	Warning: Do not stand on handrails	1/2 inch	Red
5	Caution: Before towing, latch pintle, close triplock, install lockpin	1/2 inch or decal PN 3613506	Black
6	Markings (Apply if platform area permits) Install lockpins after raising platform Note: Units without kick plates installed should have 1/2 inch stencil placed on unit in clear view of the user	1 inch	Red
* - Standard caution/informational marking color will be non-reflective black. Standard safety/warning marking color will be non-reflective red.			

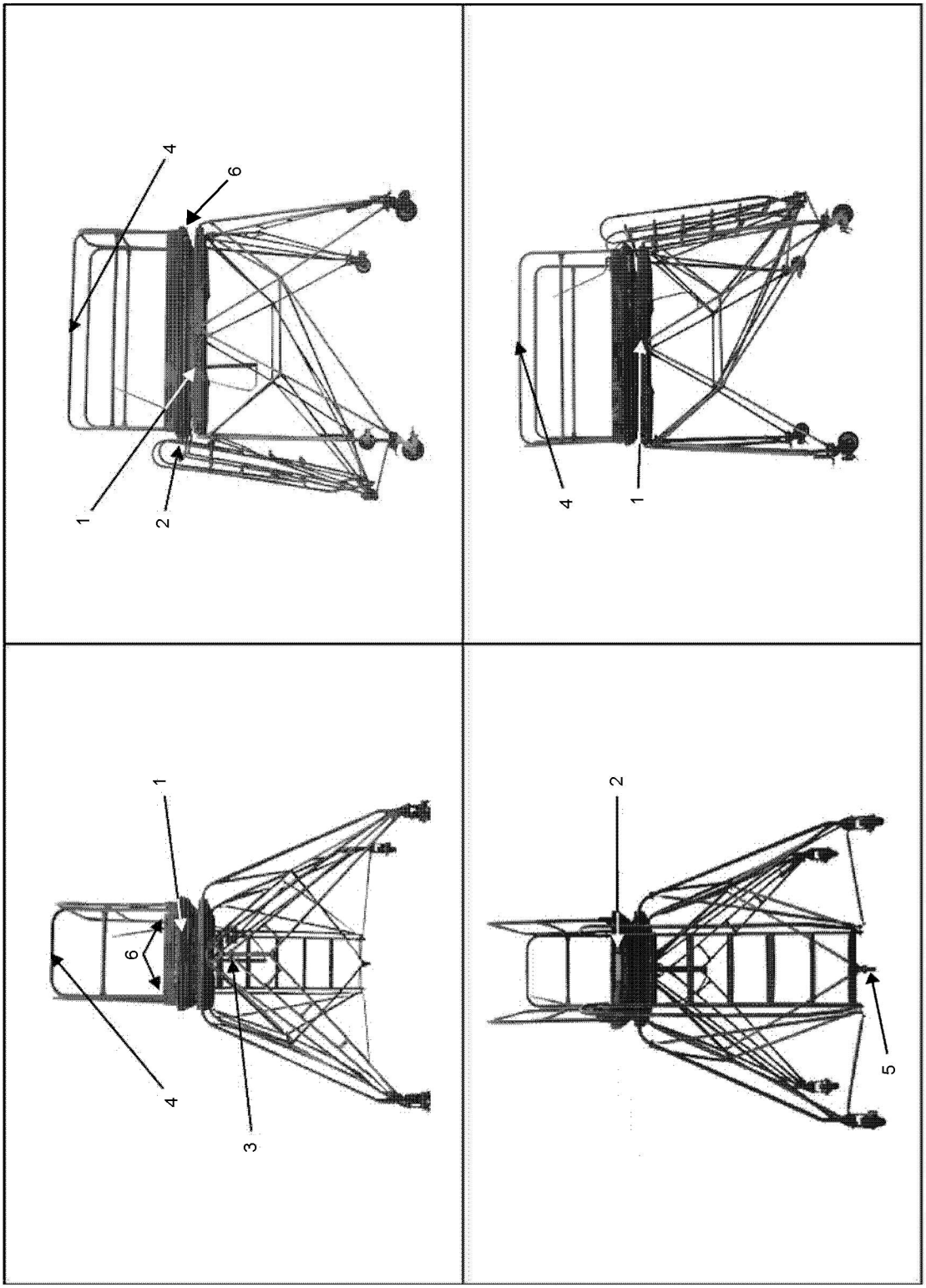

TO-35-1-18-018

Figure 2-15. B-5 Maintenance Stand

Legend for Figure 2-15			
Index No.	Markings	Size	Color*
1	Field numbers	3 inch	Black
2	Warning: Do not operate stand while standing on ladder - capacity 500 pounds	1/2 inch or decal PN 51B24895	Red
3	Maximum tow speed 5 MPH	1/2 inch	Black
4	Warning: Do not stand on handrails	1/2 inch	Red
5	Caution: Before towing, latch pintle, close triplock, install lockpin	1/2 inch or decal PN 3613506	Black
6	Install lockpins after raising platform	1 inch	Red
* - Standard caution/informational marking color will be non-reflective black. Standard safety/warning marking color will be non-reflective red.			

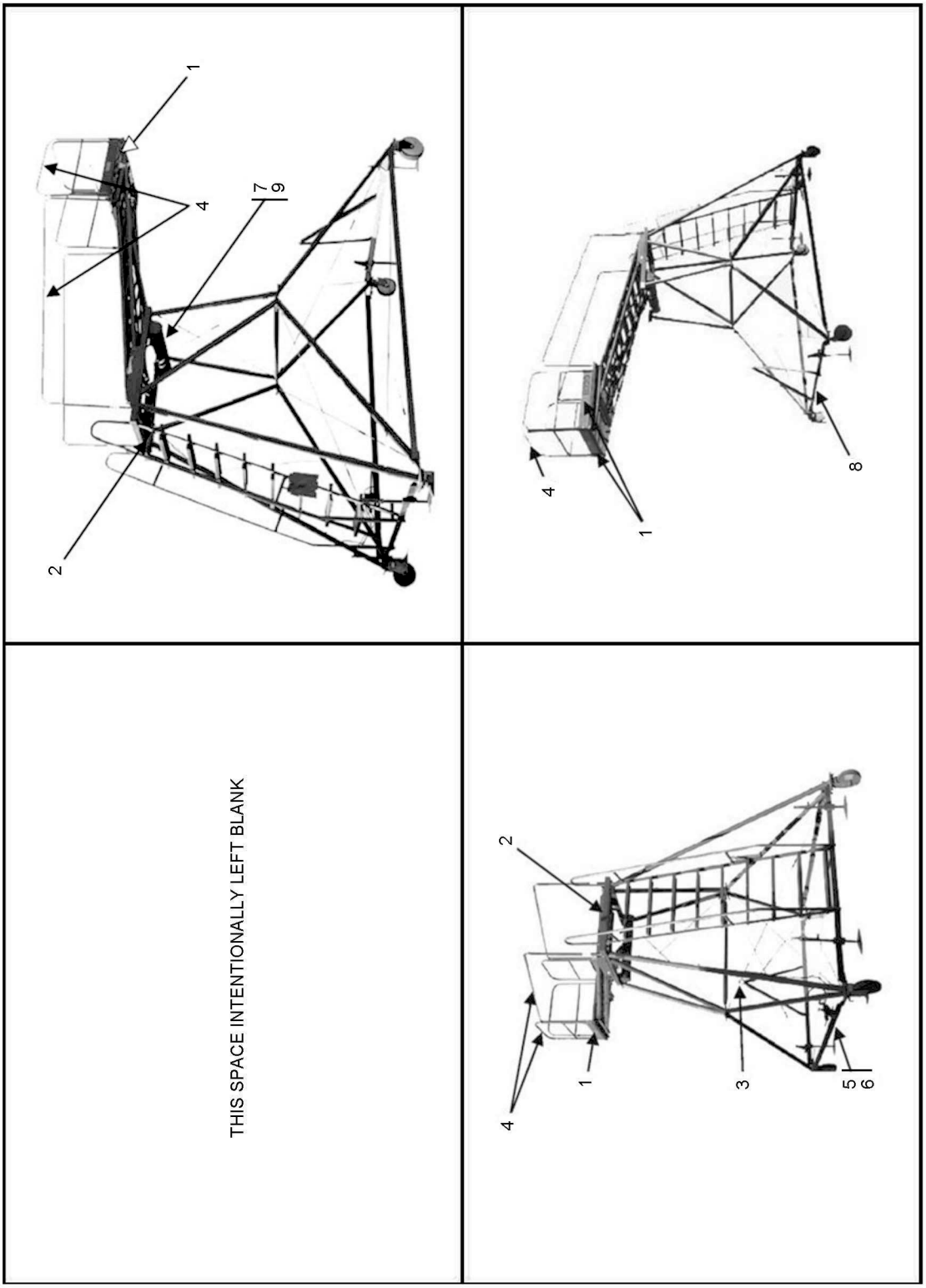

TO-35-1-18-019

Figure 2-16. B-2 Maintenance Stand

Legend for Figure 2-16			
Index No.	Markings	Size	Color*
1	Field numbers	4 inch	Black
2	Maximum load 500 pounds	1/2 inch	Black
3	Maximum tow speed 5 MPH	1/2 inch	Black
4	Warning: Do not stand on handrails	1/2 inch	Red
5	Warning: Is ram lock engaged	1/2 inch	Red
6	Caution: Close valve after locking ram	1/2 inch	Black
7	Do not jack above red on ram	1/2 inch	Black
8	Raise legs before towing	1/2 inch	Black
9	MIL-PRF-83282	1 inch	Black
* - Standard caution/informational marking color will be non-reflective black. Standard safety/warning marking color will be non-reflective red.			

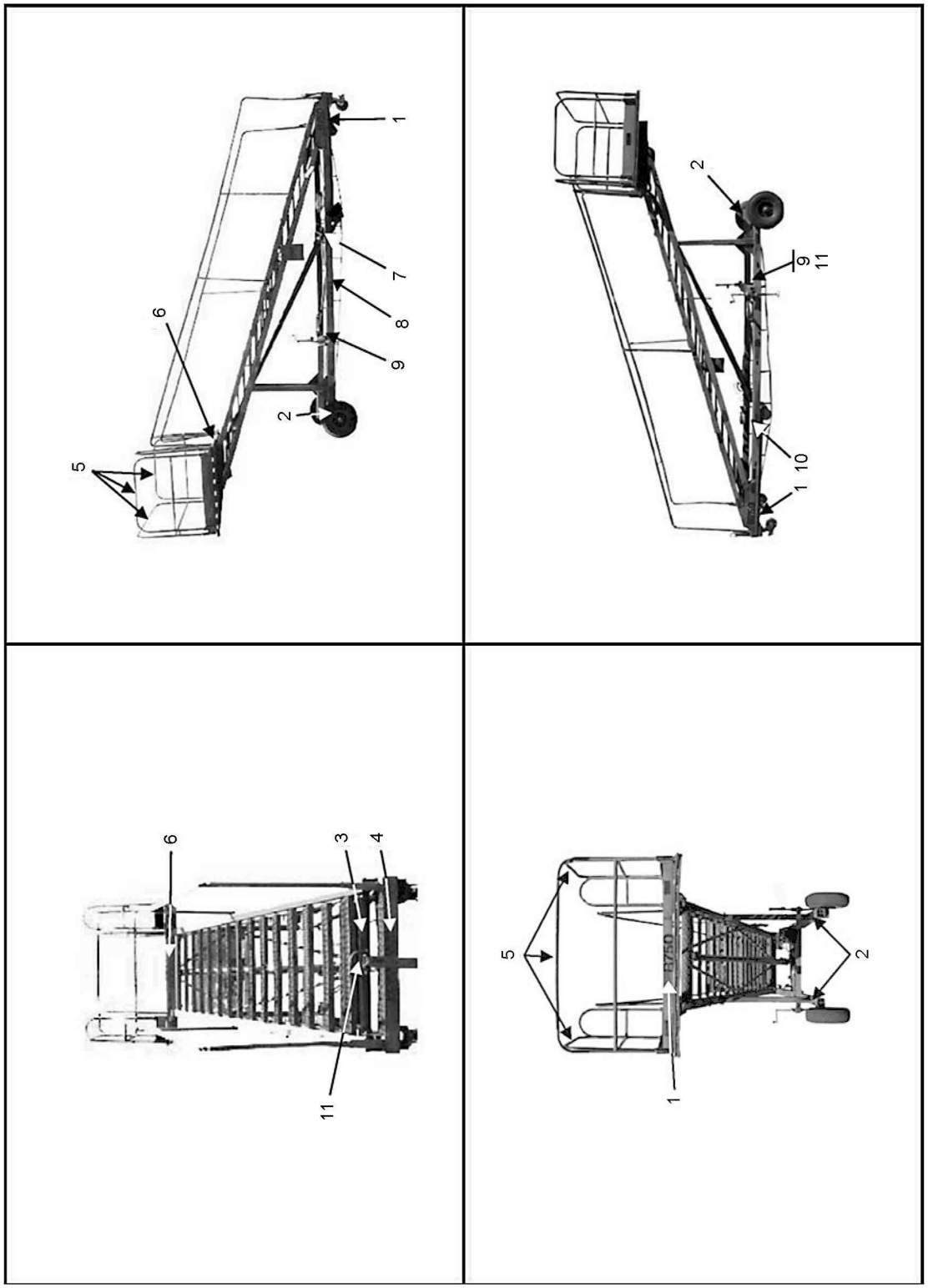

TO-35-1-18-020

Figure 2-17. B-7/B-1 Maintenance Stand

Legend for Figure 2-17			
Index No.	Markings	Size	Color*
1	Field numbers	4 inch	Black
2	Tire pressure XX PSI	1/2 inch	Black
3	Maximum load 500 pounds	1/2 inch	Black
4	Maximum tow speed 5 MPH	1/2 inch	Black
5	Warning: Do not stand on handrails	1/2 inch	Red
6	Warning: Is ram lock engaged	1/2 inch	Red
7	Caution: Close valve after locking ram	1/2 inch	Black
8	Caution: Do not raise beyond red band	1 inch	Black
9**	Raise legs before towing	1/2 inch	Black
10	MIL-PRF-83282	1/2 inch	Black
11**	Caution: Before towing, retract jack screws until hand tight and ensure handle is collapsed against the screw mechanism	1/2 inch	Black
* - Standard caution/informational marking color will be non-reflective black. Standard safety/warning marking color will be non-reflective red.			
** - B-7 maintenance stand only			

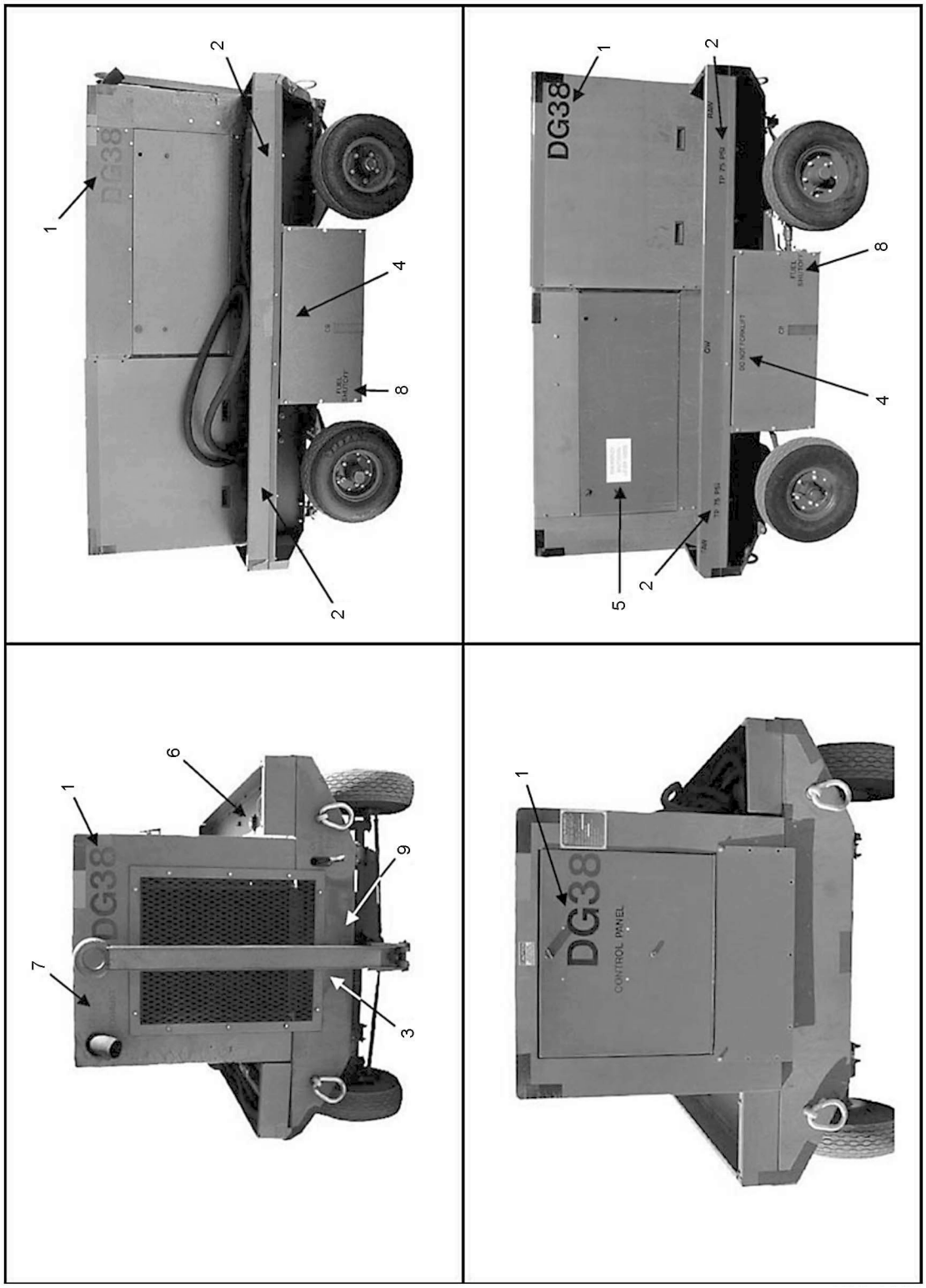

TO-35-1-18-021

Figure 2-18. B809A Generator Set

Legend for Figure 2-18			
Index No.	Markings	Size	Color*
1	Field numbers	4 inch	Black
2	Tire pressure XX PSI	1/2 inch	Black
3	Maximum tow speed 10 MPH	1/2 inch	Black
4	Do not forklift	1/2 inch	Black
5	Emergency shutdown lever inside	1 inch	Red
6	JP-8/diesel	1 inch	Black
7	Danger: Hot exhaust	1 inch	Red
8	Fuel shut-off	1/2 inch	Black
9**	Caution: Do not exceed turning radius	1/2 inch	Black
* - Standard caution/informational marking color will be non-reflective black. Standard safety/warning marking color will be non-reflective red.			

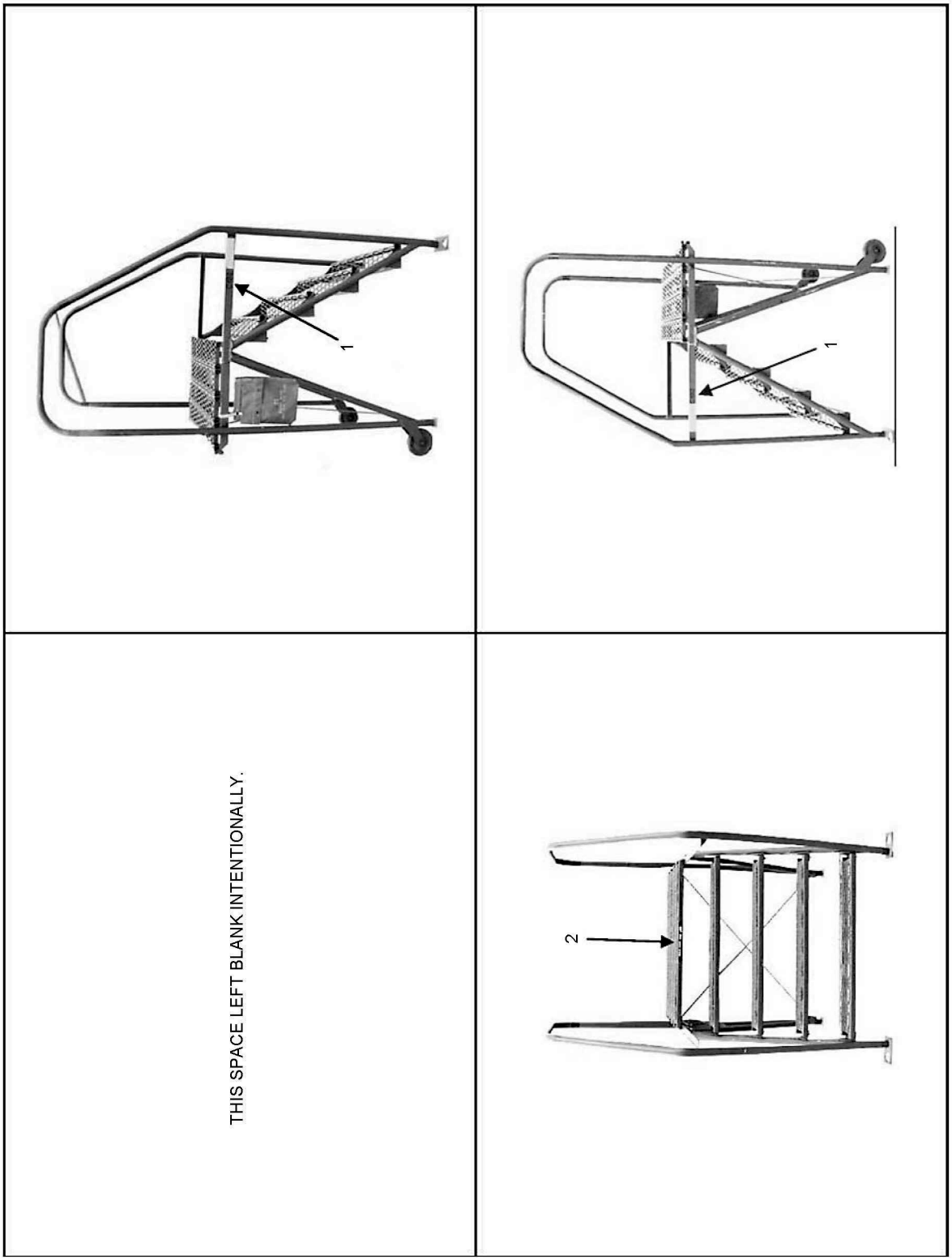

TO-35-1-18-022

Figure 2-19. C-1 Maintenance Stand

Legend for Figure 2-19			
Index No.	Markings	Size	Color*
1	Field numbers	1 inch	Black
2	Maximum load 500 pounds	1/2 inch	Black
* - Standard caution/informational marking color will be non-reflective black. Standard safety/warning marking color will be non-reflective red.			

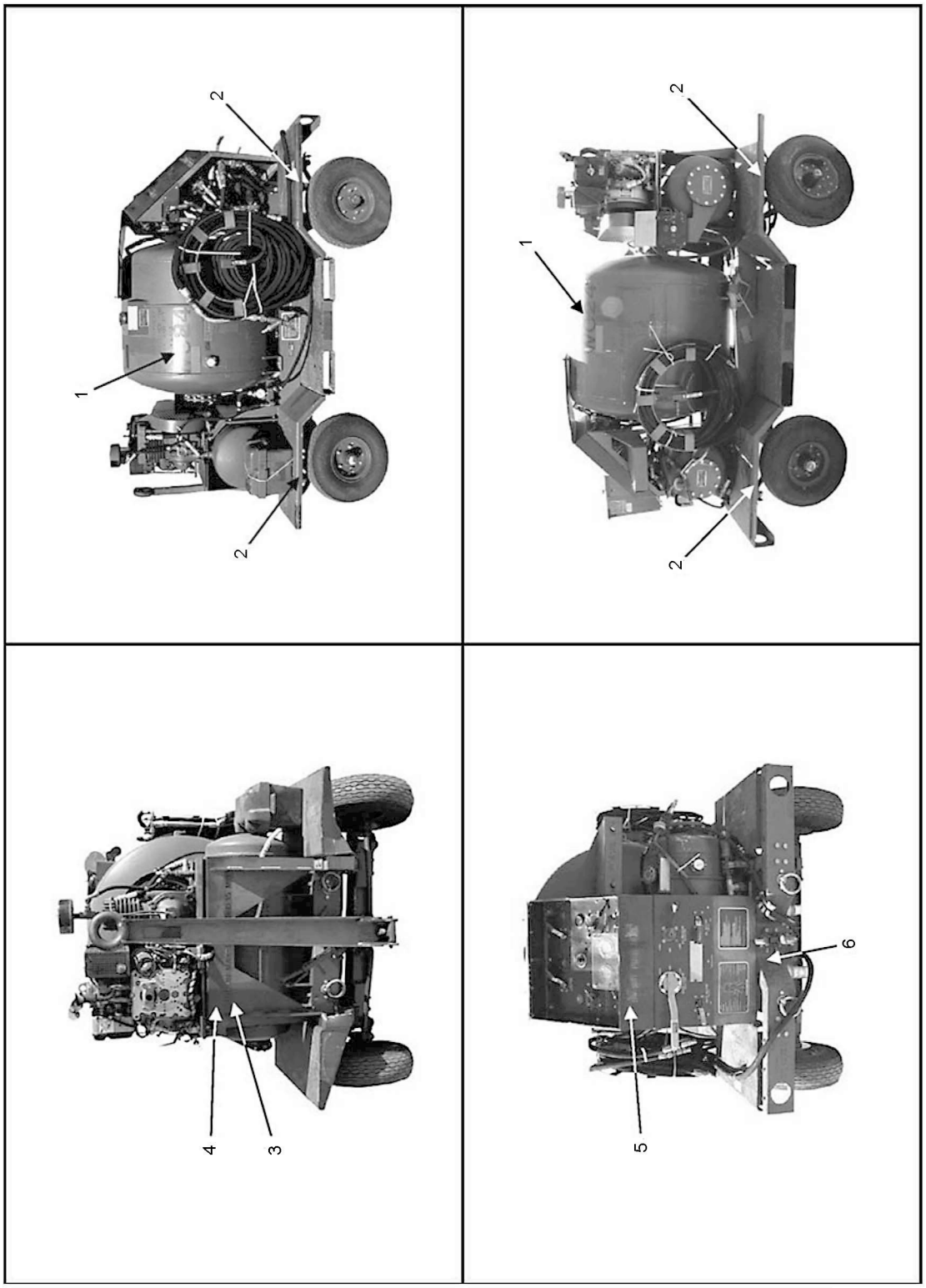

TO-35-1-18-023

Figure 2-20. Spraying Unit, Corrosion Control Wash Cart

Legend for Figure 2-20			
Index No.	Markings	Size	Color*
1	Field numbers	4 inch	Black
2	Tire pressure XX PSI	1/2 inch	Black
3	Maximum tow speed 15 MPH	1/2 inch	Black
4	Hydrostatic test Complied With (C/W) date and due date	1/2 inch	Black
5	Do not push here	1/2 inch	Black
6	Caution: Before towing, latch pintle, close triplock, install lockpin	1/2 inch or decal PN 3613506	Black
* - Standard caution/informational marking color will be non-reflective black. Standard safety/warning marking color will be non-reflective red.			

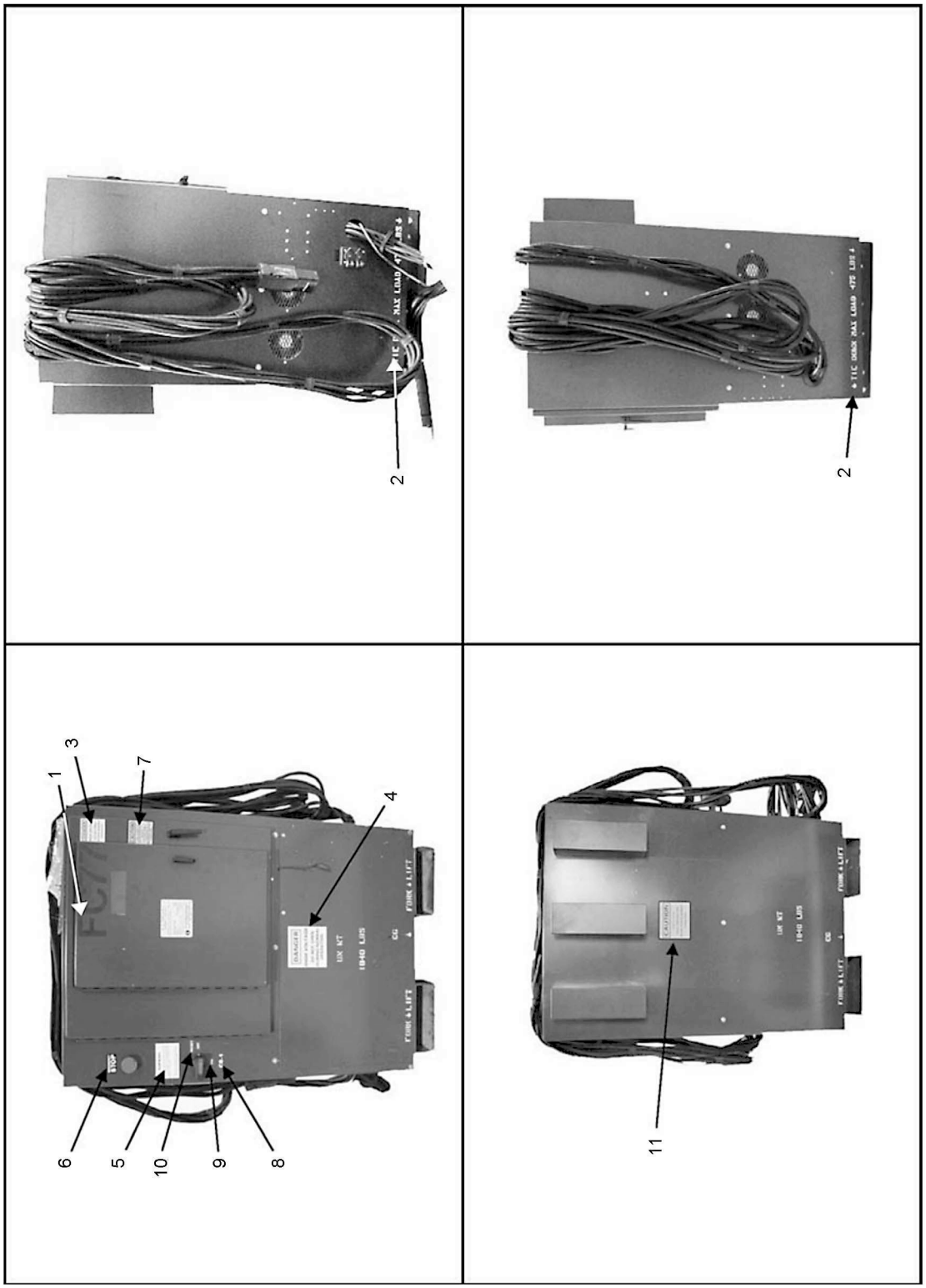

TO-35-1-18-024

Figure 2-21. EPU-6 Aircraft Power Supply

Legend for Figure 2-21			
Index No.	Markings	Size	Color*
1	Field numbers	4 inch	Black
2	Tiedown maximum load 475 pounds	1/2 inch	Black
3	Danger: High voltage do not open during normal operations	1/2 inch or small decal	Red
4	Danger: High voltage do not open during normal operations	1/2 inch or large decal	Red
5	Warning: Before turning on the circuit breaker to this unit, ensure the input power supplied to this unit matches the input terminals on the unit input auto-transformer (i.e. 480V line to line input power - use 480V terminals on the transformer)	1/2 inch or decal	Red
6	Emergency stop	1/2 inch or decal	Red
7	Caution: This cabinet is environmentally sealed. Do not open the door in inclement weather conditions	1/2 inch or decal	Black
8	CB-1	1/2 inch or decal	Black
9	On off	1/2 inch	Black
10	Reset	1/2 inch	Black
11	Caution: Parts with high temperature inside during normal operation	1/2 inch or decal	Black
* - Standard caution/informational marking color will be non-reflective black. Standard safety/warning marking color will be non-reflective red.			

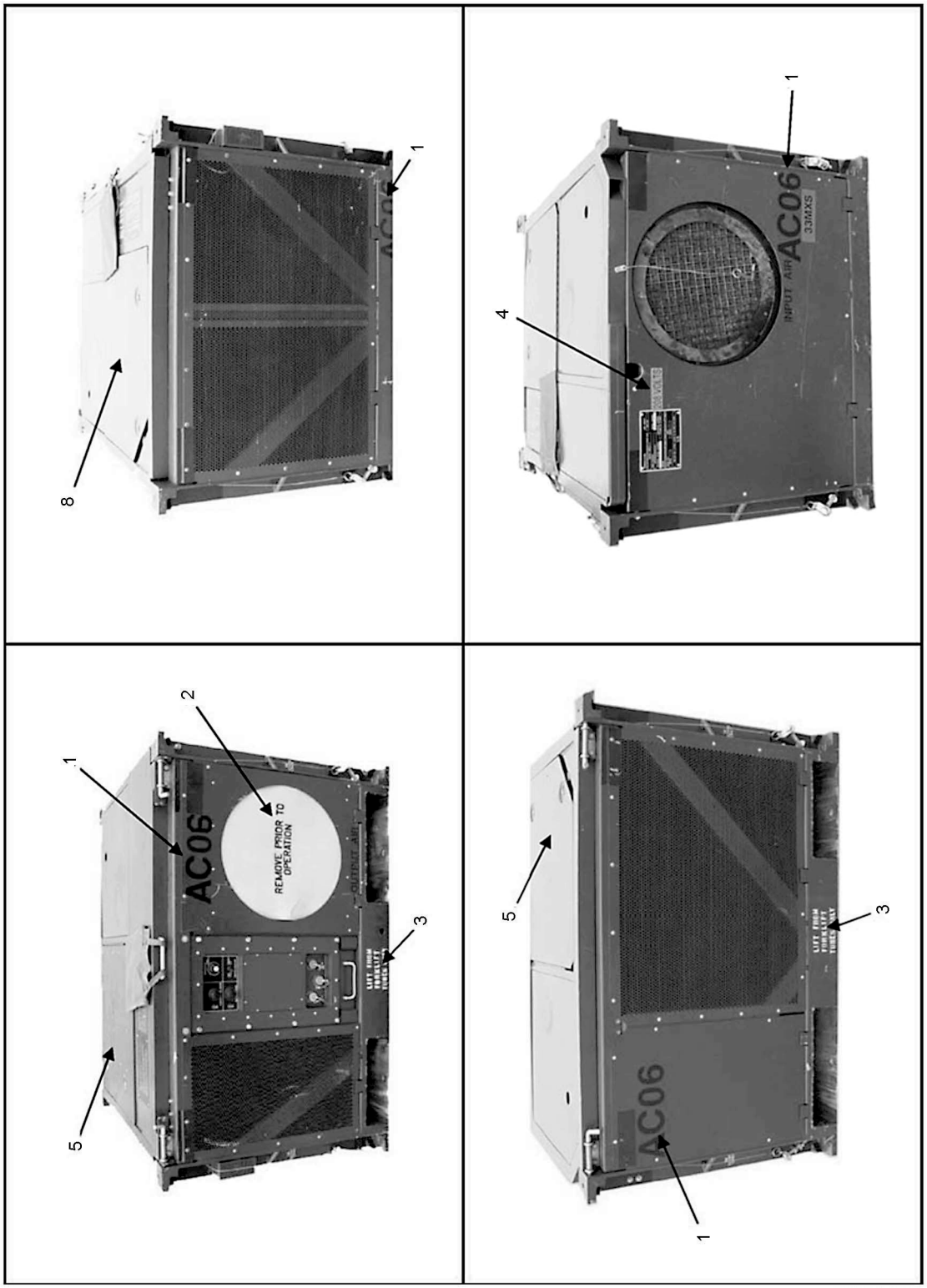

TO-35-1-18-025

Figure 2-22. FDECU-3 Environmental Control Unit

Legend for Figure 2-22			
Index No.	Markings	Size	Color*
1	Field numbers	4 inch	Black
2	Remove prior to operation	1/2 inch	Black
3	Lift from forklift tubes only	1/2 inch	Black
4	208V	1/2 inch	Black
5	Open to run	1/2 inch	Black
* - Standard caution/informational marking color will be non-reflective black. Standard safety/warning marking color will be non-reflective red.			

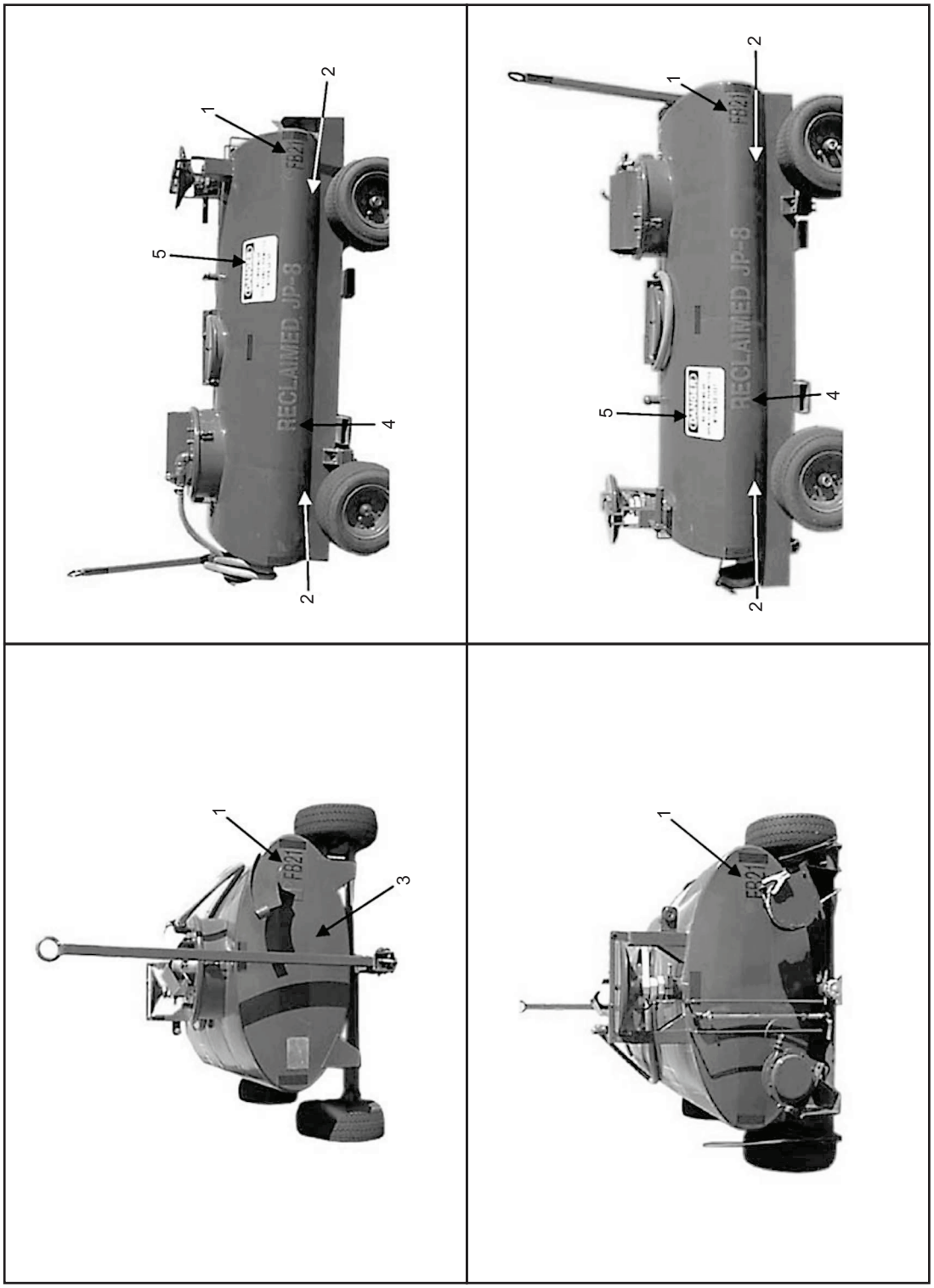

TO-35-1-18-026

Figure 2-23. Fuel Bowser 400 Gallon

Legend for Figure 2-23			
Index No.	Markings	Size	Color*
1	Field numbers	4 inch	Black
2	Tire pressure XX PSI	1/2 inch	Black
3	Maximum tow speed 15 MPH	1/2 inch	Black
4	Warning: Reclaimed JP-8	4 inch	Red
5	Danger: No smoking or open flame permitted within 50 feet	Decal or 3 inch	Red
* - Standard caution/informational marking color will be non-reflective black. Standard safety/warning marking color will be non-reflective red.			

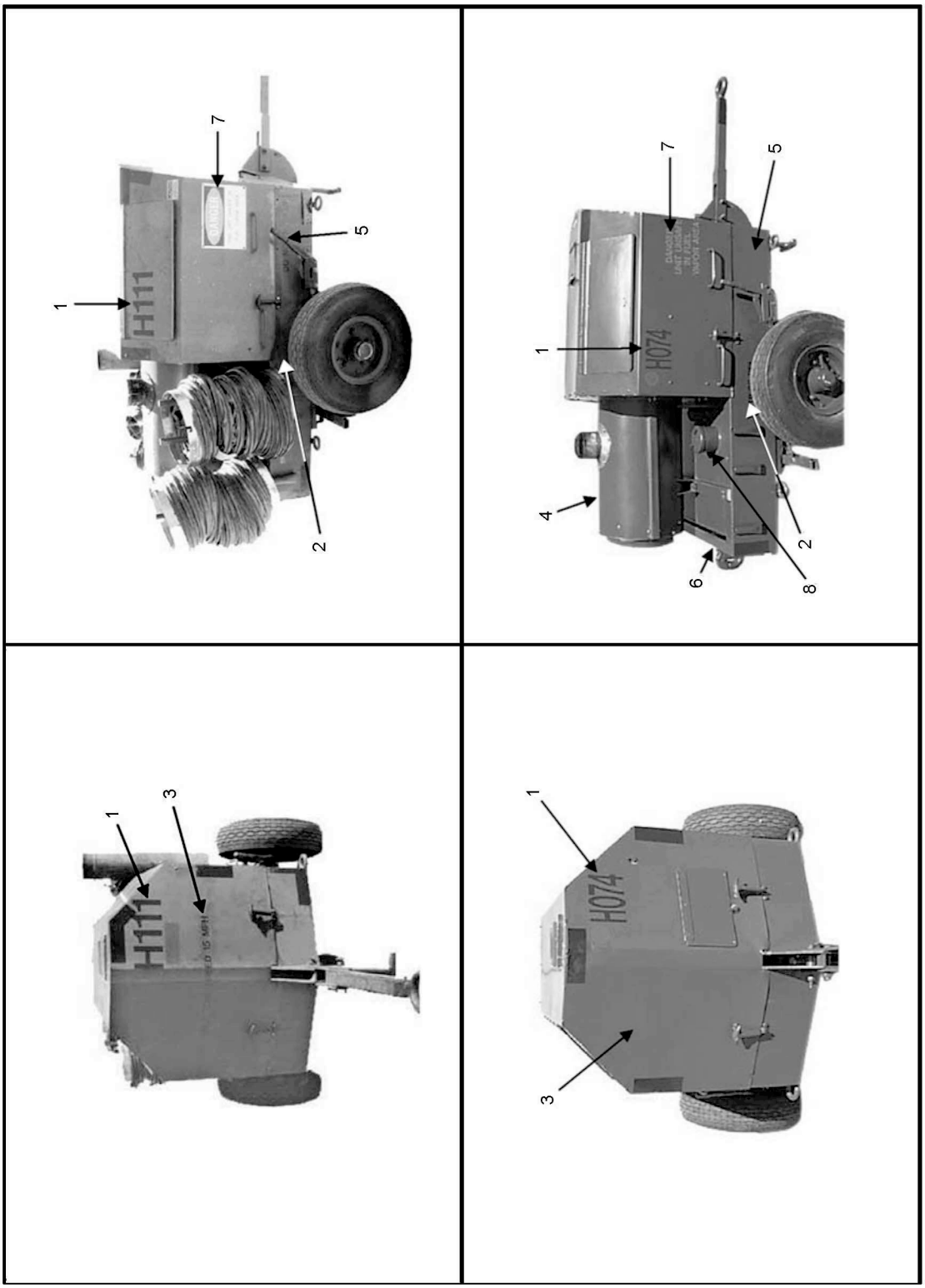

TO-35-1-18-027

Figure 2-24. H-1 Heater

Legend for Figure 2-24			
Index No.	Markings	Size	Color*
1**	Field numbers (See note)	4 inch	Black
2**	Tire pressure XX PSI	1/2 inch	Black
3	Maximum tow speed 15 MPH	1/2 inch	Black
4	Danger: Hot exhaust	1 inch	Red
5**	Do not forklift	1/2 inch	Black
6	Caution: Before towing, latch pintle, close triplock, install lockpin	1/2 inch or decal PN 3613506	Black
7**	Danger: Unit unsafe in fuel vapor area	1 inch	Red (If metal placard/decal is missing)
8	JP-8	1 inch	Black
* - Standard caution/informational marking color will be non-reflective black. Standard safety/warning marking color will be non-reflective red.			
** - Stencil approximately the same location on both sides of the unit.			

NOTE

- Figure 2-24 includes views of various models of the H-1 Heater. Variations in the location of the field numbers on the H-1 Heater is authorized provided the numbers are consistently located on all of the H-1 Heaters in an organization.
- Markings applied to all H-1 Heater models.

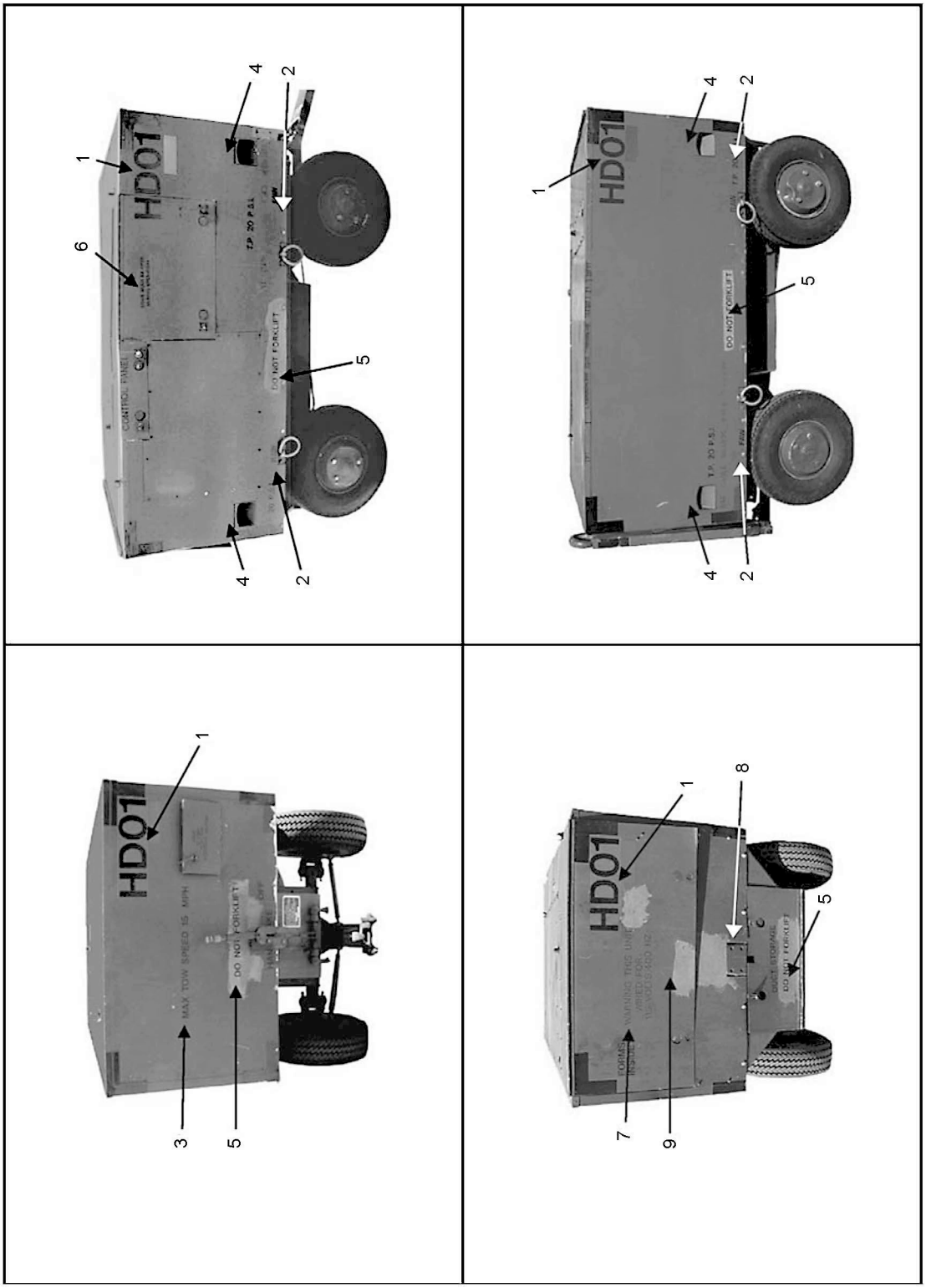

TO-35-1-18-028

Figure 2-25. HDU-13M Heater

Legend for Figure 2-25			
Index No.	Markings	Size	Color*
1	Field numbers	4 inch	Black
2	Tire pressure XX PSI	1/2 inch	Black
3	Maximum tow speed 15 MPH	1/2 inch	Black
4	Use cable guards when hoisting	1 inch	Black
5	Do not forklift	1/2 inch	Black
6	Door must be open during operation	1/2 inch	Black
7	Warning: This unit wired for 220V, 60 Hertz (Hz) or 400V, 60 Hz	1 inch	Red
8	Caution: Before towing, latch pintle (if pintle hook installed), close triplock, install lockpin	1/2 inch or decal PN 3613506	Black
9	Warning: A continuous ground system must be available between power source, heater and unit or area being supplied with conditioned air	1 inch	Red
* - Standard caution/informational marking color will be non-reflective black. Standard safety/warning marking color will be non-reflective red.			

NOTE

- Use appropriate stencil per unit configuration.
- HDU-13/M model H41 utilizes 200V, 400 Hz. Adjust stencil to reflect proper configuration.

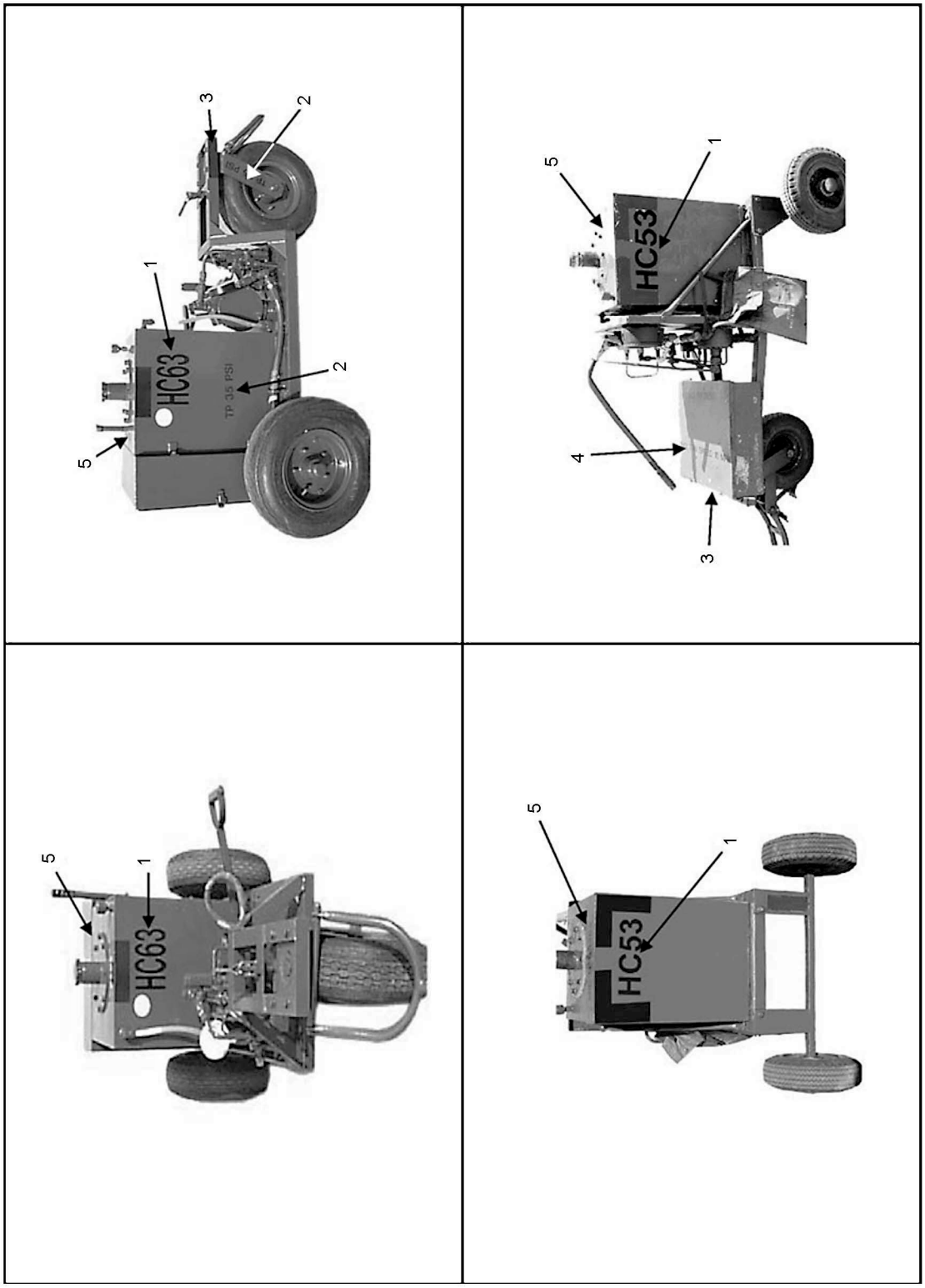

TO-35-1-18-029

Figure 2-26. Hydraulic Cart

Legend for Figure 2-26			
Index No.	Markings	Size	Color*
1	Field numbers	4 inch	Black
2	Tire pressure XX PSI	1/2 inch	Black
3	Front tire pressure 5 PSI	1/2 inch	Black
4	Maximum tow speed 10 MPH	1/2 inch	Black
5	MIL-PRF-83282 (or applicable hydraulic fluid)	1 inch	Black
* - Standard caution/informational marking color will be non-reflective black. Standard safety/warning marking color will be non-reflective red.			

NOTE

Figure 2-26 includes views of various models of the hydraulic cart.

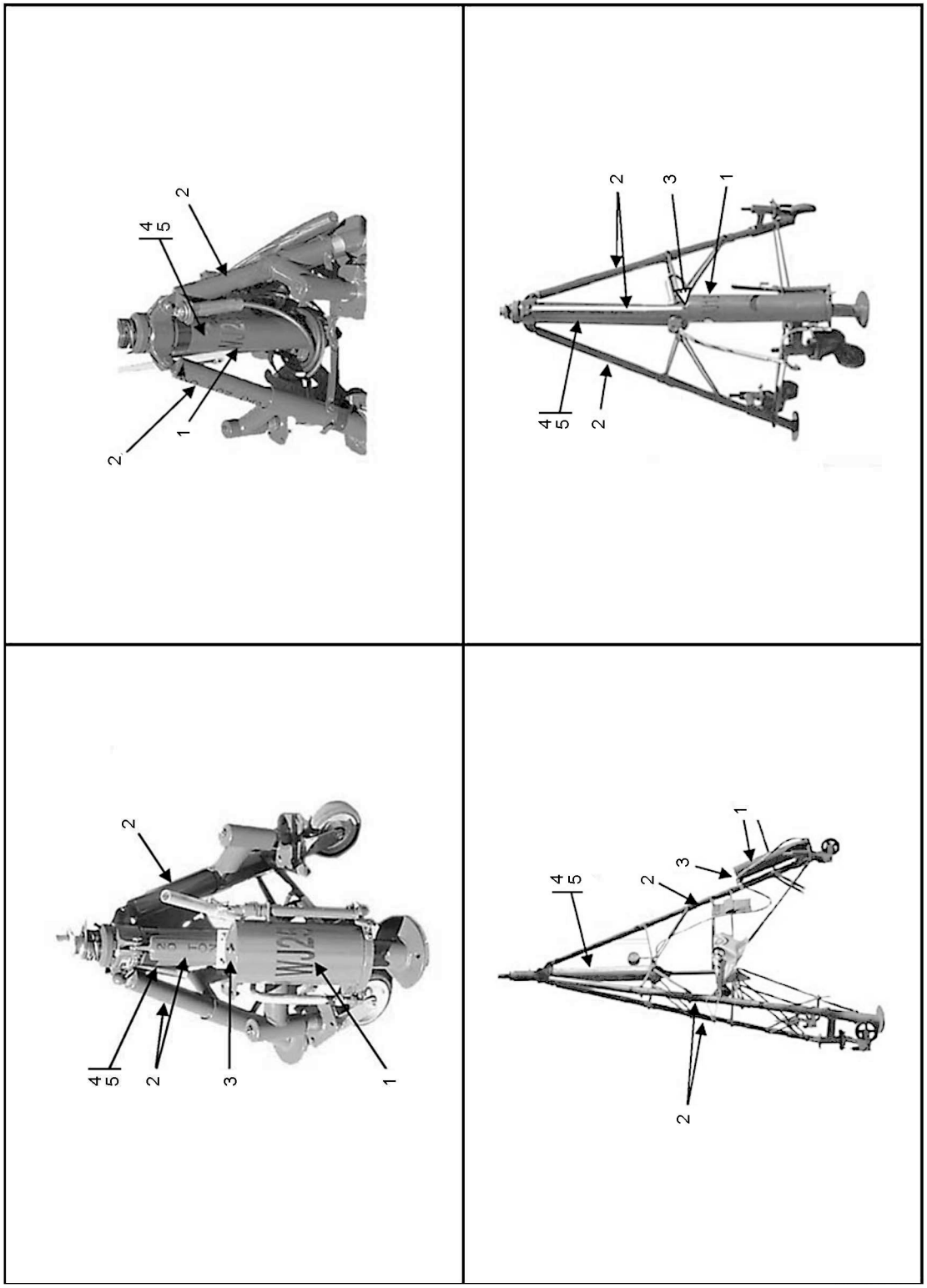

TO-35-1-18-030

Figure 2-27. Jack, Hydraulic 10 - 30 Ton

Legend for Figure 2-27			
Index No.	Markings	Size	Color*
1	Field numbers	4 inch	Black
2	Maximum capacity XX tons (See note)[1]	1 inch	Black
3	MIL-PRF-83282	1 inch	Black
4	Rise indicator (If applicable)	Decal	
5	Maximum screw extension XX inches (See note)[2]	1 inch	Black
* - Standard caution/informational marking color will be non-reflective black. Standard safety/warning marking color will be non-reflective red.			
[1] - Substitute the appropriate tonnage capacity in place of the XX. [2] - Maximum 18 inches for 20 and 10 ton jacks.			

NOTE

- Figure 2-27 includes views of various models of 10-30 ton hydraulic jacks.
- Markings are typical of all 10-30 ton hydraulic jacks and apply to all of the different hydraulic jack models. Reference end item to validate capacity and extension screw height.

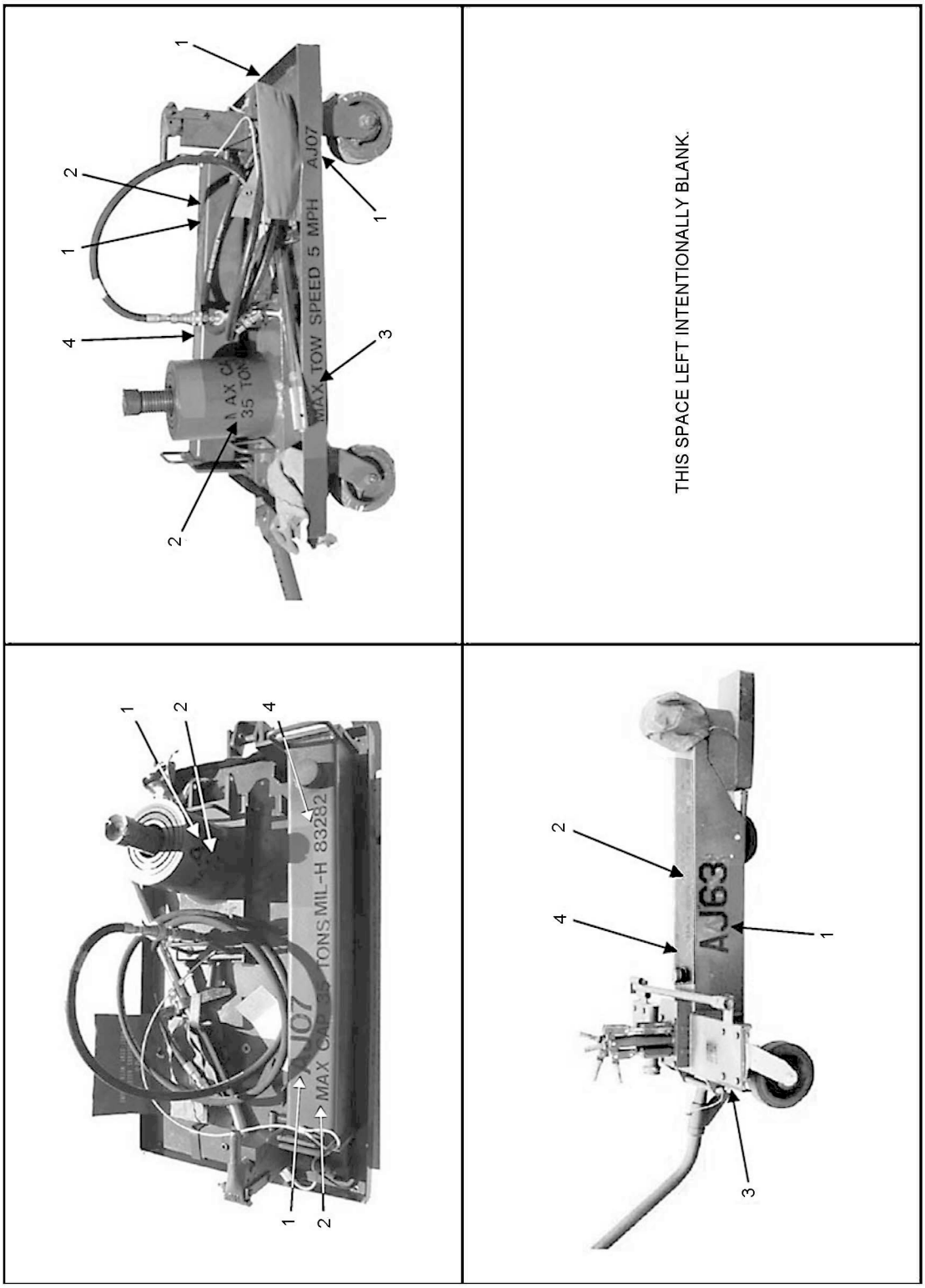

TO-35-1-18-031

Figure 2-28. Jack, 35 Ton, Axle

Legend for Figure 2-28			
Index No.	Markings	Size	Color*
1	Field numbers	2 inch	Black
2	Maximum capacity 35 tons	1 inch	Black
3	Maximum tow speed 5 MPH	1 inch	Black
4	MIL-PRF-83282	1 inch	Black
* - Standard caution/informational marking color will be non-reflective black. Standard safety/warning marking color will be non-reflective red.			

NOTE

- Figure 2-28 includes views of various models of the 35 ton axle jack.
- Markings apply to all 35 ton axle jack models. Markings shown are one side only. Apply stencil decals to like locations on each side of the unit.

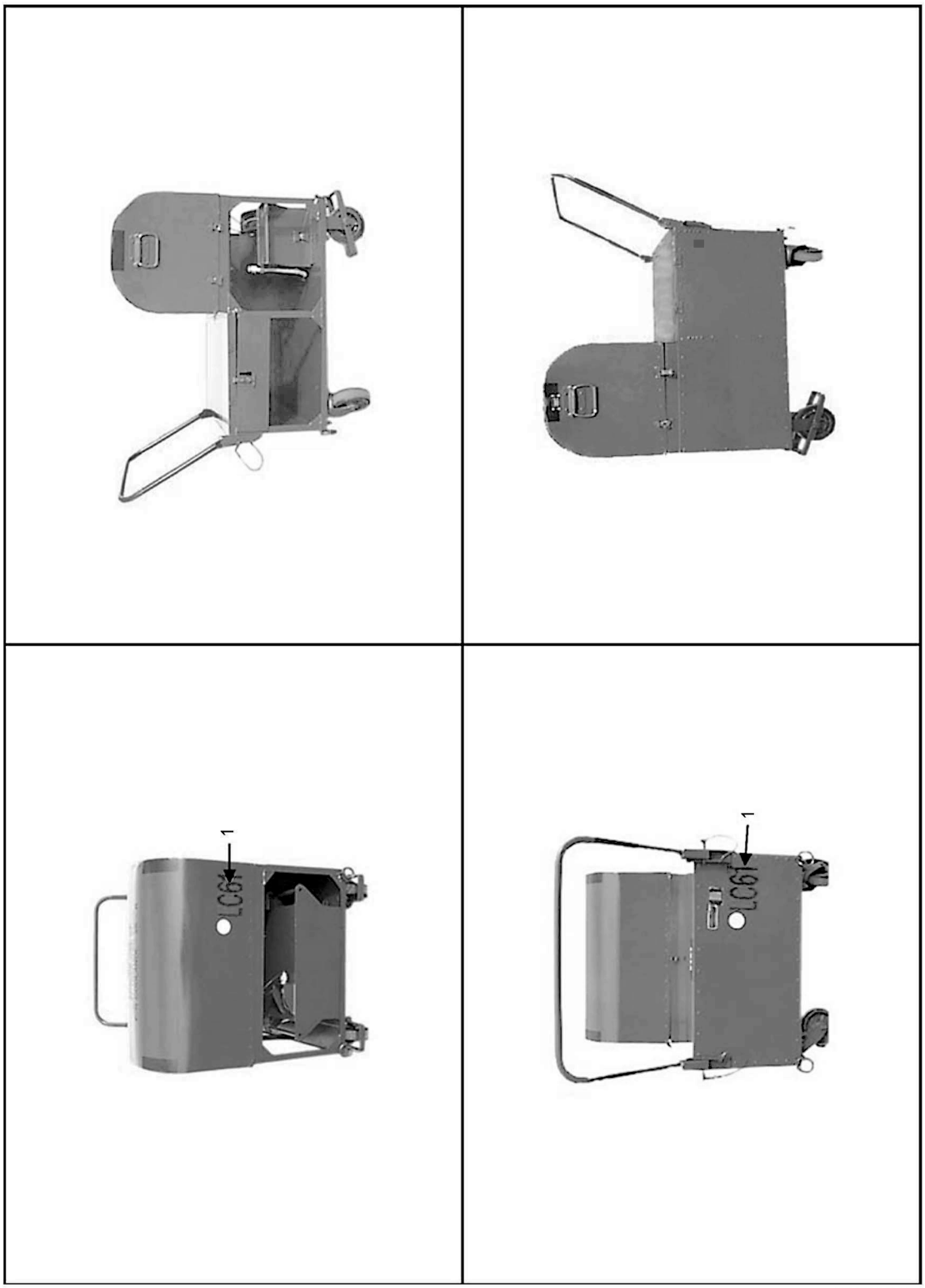

TO-35-1-18-032

Figure 2-29. Liquid Cooling Service (LCS) Cart

Legend for Figure 2-29			
Index No.	Markings	Size	Color*
1	Field numbers	4 inch	Black
* - Standard caution/informational marking color will be non-reflective black. Standard safety/warning marking color will be non-reflective red.			

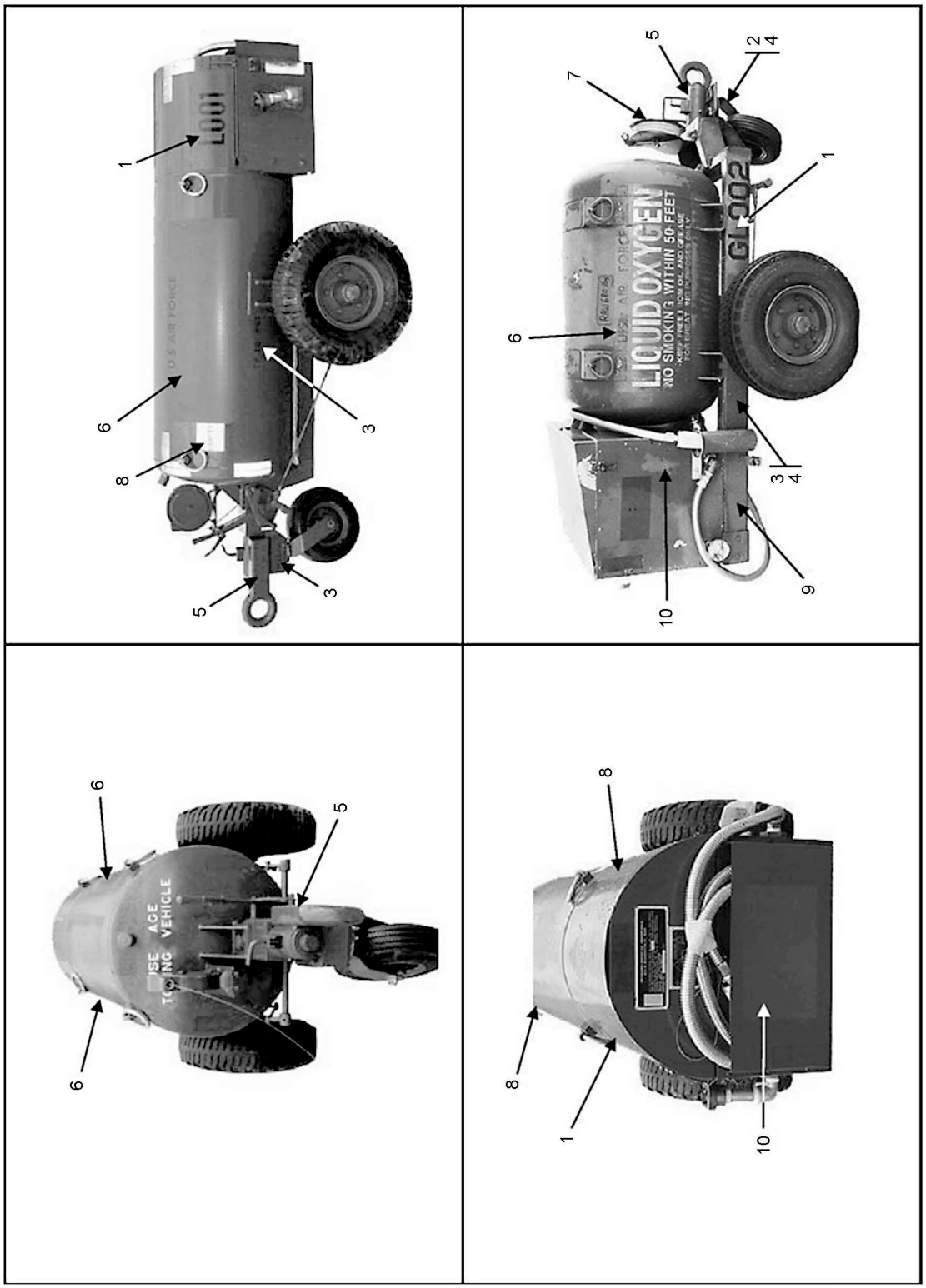

TO-35-1-18-033

Figure 2-30. Liquid Oxygen (LOX) Cart

Legend for Figure 2-30			
Index No.	Markings	Size	Color*
1	Field numbers	4 inch	Black
2	Tire pressure XX PSI	1/2 inch	Black
3	Tire pressure XX PSI maximum	1/2 inch	Black
4	Caution: Do not over inflate	1/2 inch	Black
5	Maximum tow speed 10 MPH	1/2 inch	Black
6	U.S. Air Force LOX: No smoking within 50 feet, keep free from oil and grease for breathing purposes only	1-3/4 inch 1-3/4 inch 4 inch 1 inch or decal	Black Red Red Red
7	Caution: Ground clamp plugs shall not be allowed to drag across the ramp clamps shall be clamped to reels on equipment	1/2 inch or decal	Black
8	Empty (As required)	1/2 inch	Black on white box
9	Warning: All valves must be closed and an overboard vent line attached to the vent line, disconnect fitting during air transport	Stencil or decal	Red
10	Warning: Do not fill tank through this line for servicing only	1/2 inch	Red
* - Standard caution/informational marking color will be non-reflective black. Standard safety/warning marking color will be non-reflective red.			

NOTE

- Figure 2-30 includes views of various models of the LOX cart.
- Markings apply to all LOX cart models, except as noted.

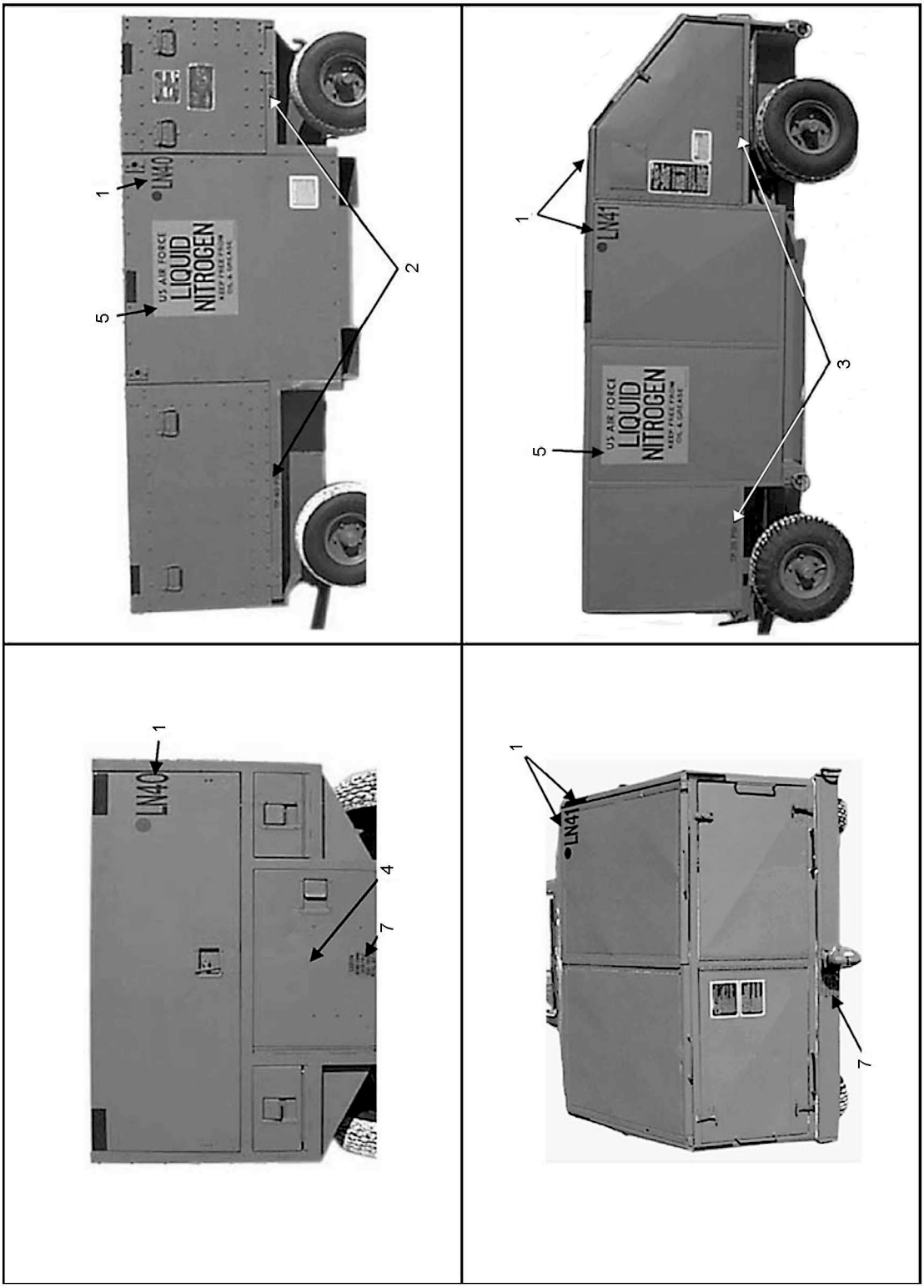

TO-35-1-18-034

Figure 2-31. LN2 Liquid Nitrogen Cart

Legend for Figure 2-31			
Index No.	Markings	Size	Color*
1	Field numbers[1]	4 inch	Black
2	Tire pressure XX PSI	1/2 inch	Black
3	Tire pressure XX PSI	1/2 inch	Black
4	Maximum tow speed 15 MPH	1/2 inch	Black
5	U.S. Air Force liquid nitrogen: Keep free from oil and grease	Decal or vinyl letters	
6**	Hydrostatic test C/W date and due date	1/2 inch	Black
7	Caution: Before towing, latch pintle, close triplock, install lockpin	1/2 inch or decal PN 3613506	Black
* - Standard caution/informational marking color will be non-reflective black. Standard safety/warning marking color will be non-reflective red.			
** - Marking location not displayed. Stencil applied on interior tank.			
[1] - LN2 cart (old style-rounded corners) - field number on front left corner of roof.			

NOTE

- Figure 2-31 includes views of various models of the LN2 liquid nitrogen cart.
- Markings apply to all LN2 liquid nitrogen cart models, except as noted.

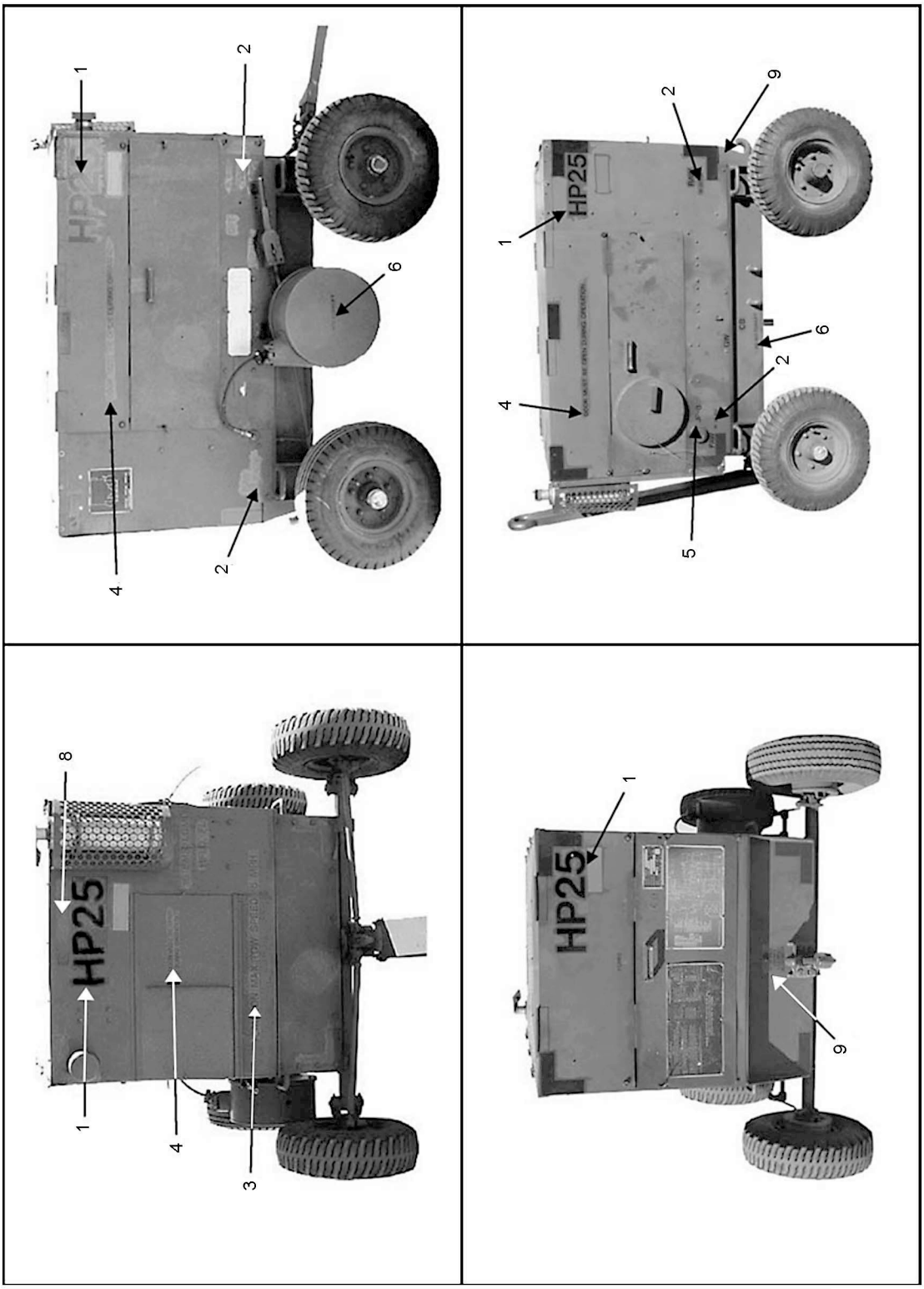

TO-35-1-18-035

Figure 2-32. MC-1A High Pack Air Compressor

Legend for Figure 2-32			
Index No.	Markings	Size	Color*
1	Field numbers	4 inch	Black
2	Tire pressure XX PSI	1/2 inch	Black
3	Maximum tow speed 15 MPH	1/2 inch	Black
4	Door must be open during operation	1/2 inch	Black
5	JP-8	1 inch	Black
6	Do not forklift	1/2 inch	Black
7**	Hydrostatic test C/W date and due date	1/2 inch	Black
8	Danger: Hot exhaust	1 inch	Red
9	Caution: Before towing, latch pintle, close triplock, install lockpin	1/2 inch or decal PN 3613506	Black
* - Standard caution/informational marking color will be non-reflective black. Standard safety/warning marking color will be non-reflective red.			
** - Marking location not displayed. Hydrostatic test date is stenciled on the rank located on the interior of the unit.			

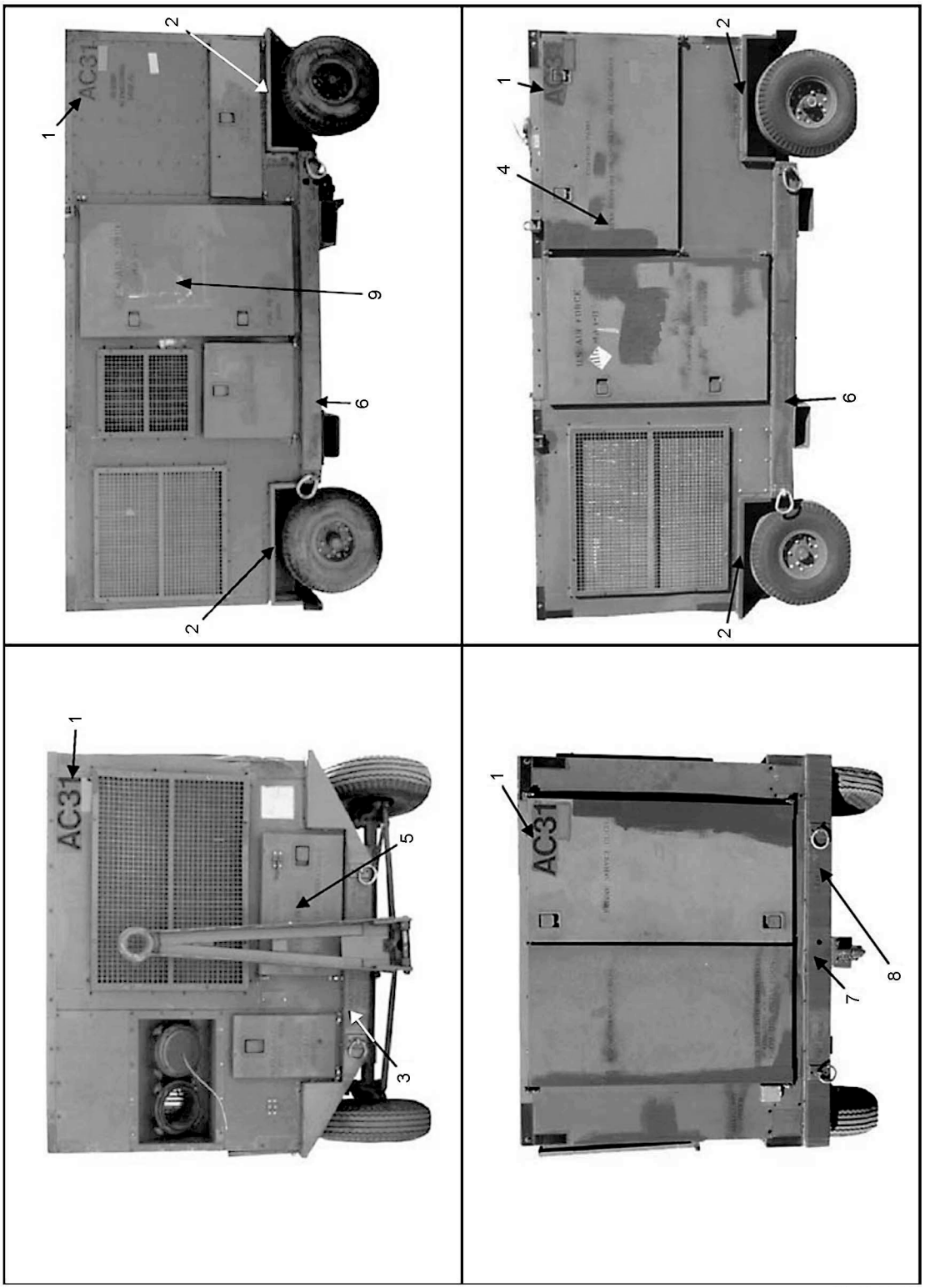

TO-35-1-18-036

Figure 2-33. MA-3D Air Conditioner

Legend for Figure 2-33			
Index No.	Markings	Size	Color*
1	Field numbers	4 inch	Black
2	Tire pressure XX PSI	1/2 inch	Black
3	Maximum tow speed 15 MPH	1/2 inch	Black
4	Open control panel door before operating	1/2 inch	Black
5	Caution: Door must be open before operating air conditioner	1/2 inch	Black
6	Caution: Use cable guides and hoist rings when hoisting	1/2 inch	Black
7	Caution: Before towing, latch pintle, close triplock, install lockpin	1/2 inch or decal PN 3613506	Black
8	Do not tow more than one similar unit from this pintle hook	1 inch	Black
9	JP-8 fuel filler inside	1 inch	Black
* - Standard caution/informational marking color will be non-reflective black. Standard safety/warning marking color will be non-reflective red.			

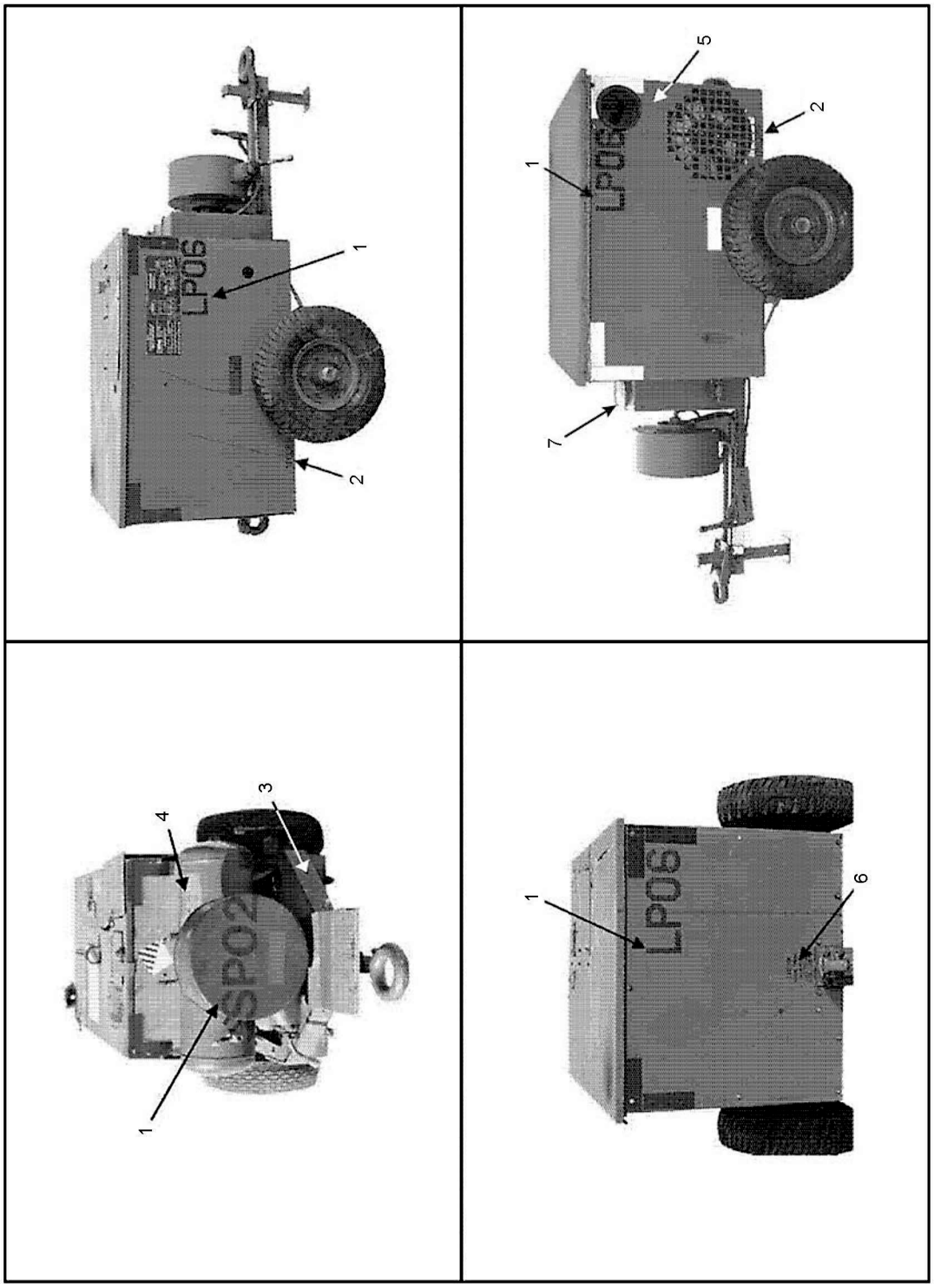

TO-35-1-18-037

Figure 2-34. MC-2A Air Compressor

Legend for Figure 2-34			
Index No.	Markings	Size	Color*
1	Field numbers	4 inch	Black
2	Tire pressure XX PSI	1/2 inch	Black
3	Maximum tow speed 15 MPH	1/2 inch	Black
4	Hydrostatic test C/W date and due date	1/2 inch	Black
5	Danger: Hot exhaust	1 inch	Red
6	Caution: Before towing, latch pintle, close triplock, install lockpin	1/2 inch or decal PN 3613506	Black
7	JP-8	1/2 inch	Black
* - Standard caution/informational marking color will be non-reflective black. Standard safety/warning marking color will be non-reflective red.			

NOTE

- Figure 2-34 includes views of various models of the MC-2A air compressor.
- Markings apply to all MC-2A air compressor models.

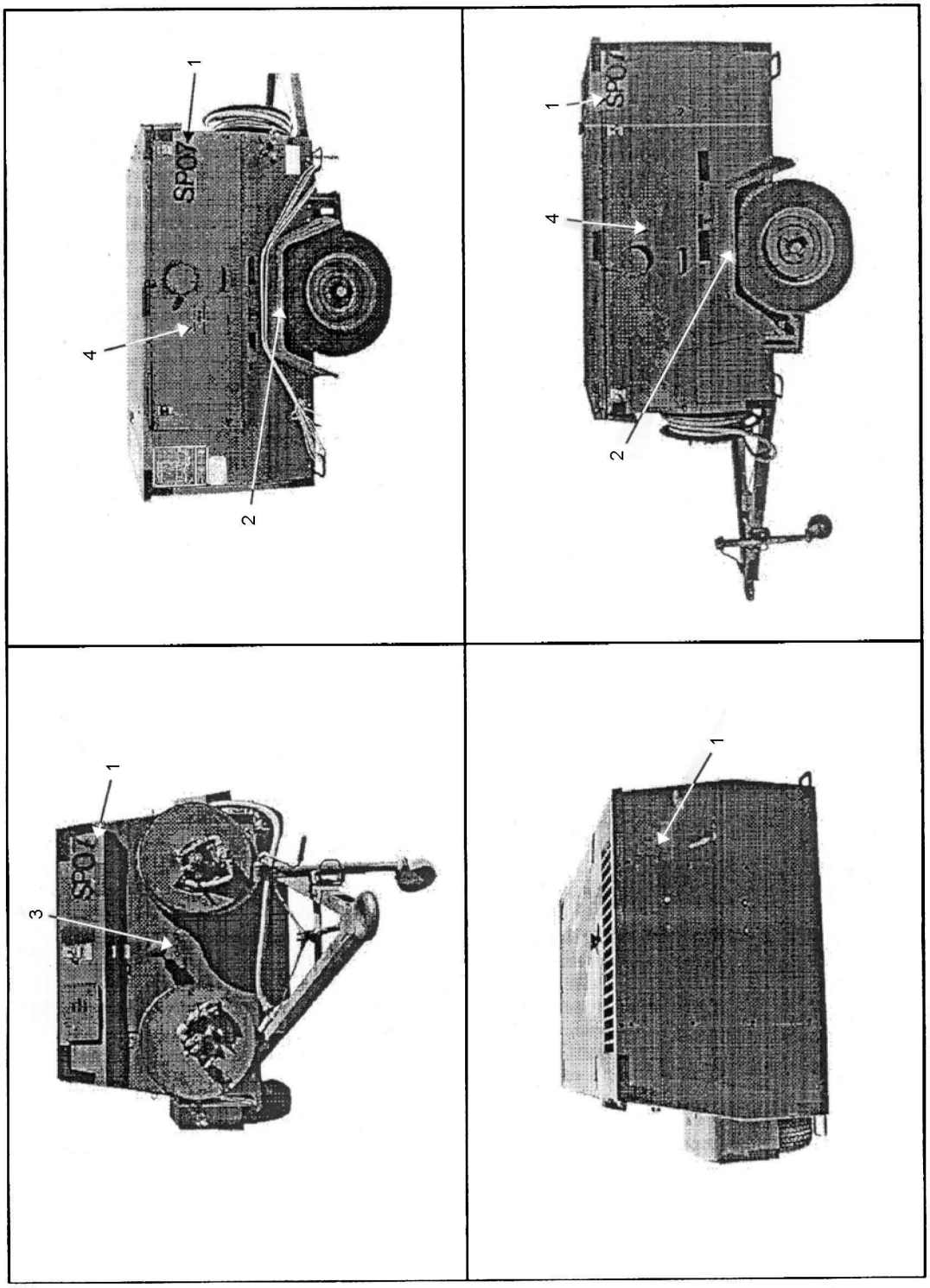

TO-35-1-18-038

Figure 2-35. MC-7 Air Compressor

Legend for Figure 2-35			
Index No.	Markings	Size	Color*
1	Field numbers	4 inch	Black
2	Tire pressure XX PSI	1/2 inch	Black
3	Maximum tow speed 15 MPH	1/2 inch	Black
4	Door must be closed during operation	1/2 inch	Black
* - Standard caution/informational marking color will be non-reflective black. Standard safety/warning marking color will be non-reflective red.			

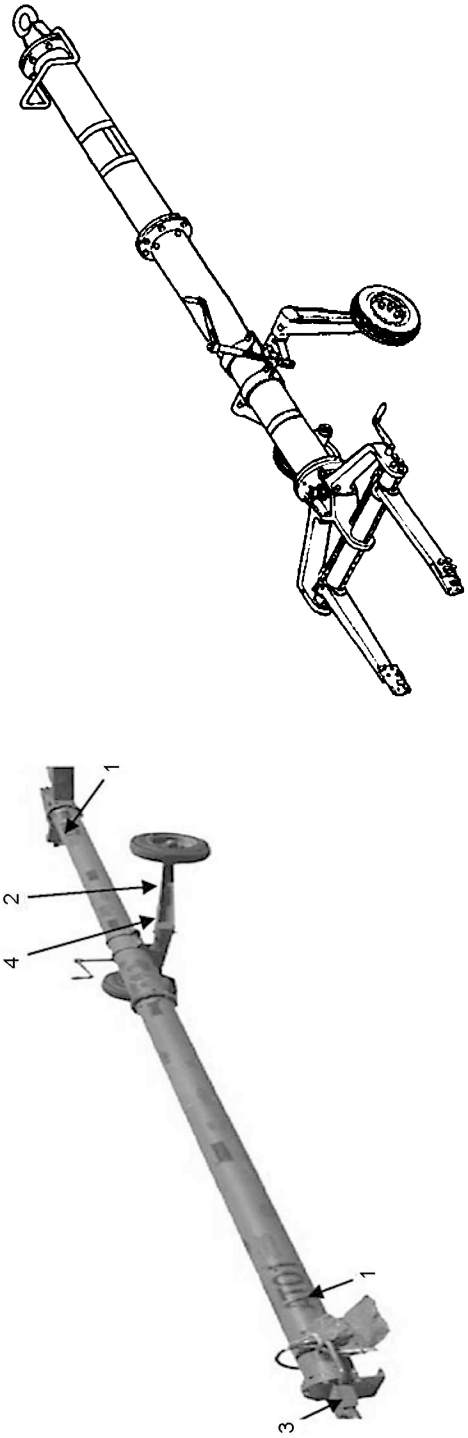

TO-35-1-18-039

Figure 2-36. MD-1 Tow bar

Legend for Figure 2-36			
Index No.	Markings	Size	Color*
1	Field numbers	4 inch	Black
2	Tire pressure XX PSI	1/2 inch	Black
3	Maximum tow speed 15 MPH Caution: Do not allow the tow bar to contact tow vehicle	1/2 inch	Black
4	Caution: Retract wheels when towing	1/2 inch	Black
* - Standard caution/informational marking color will be non-reflective black. Standard safety/warning marking color will be non-reflective red.			

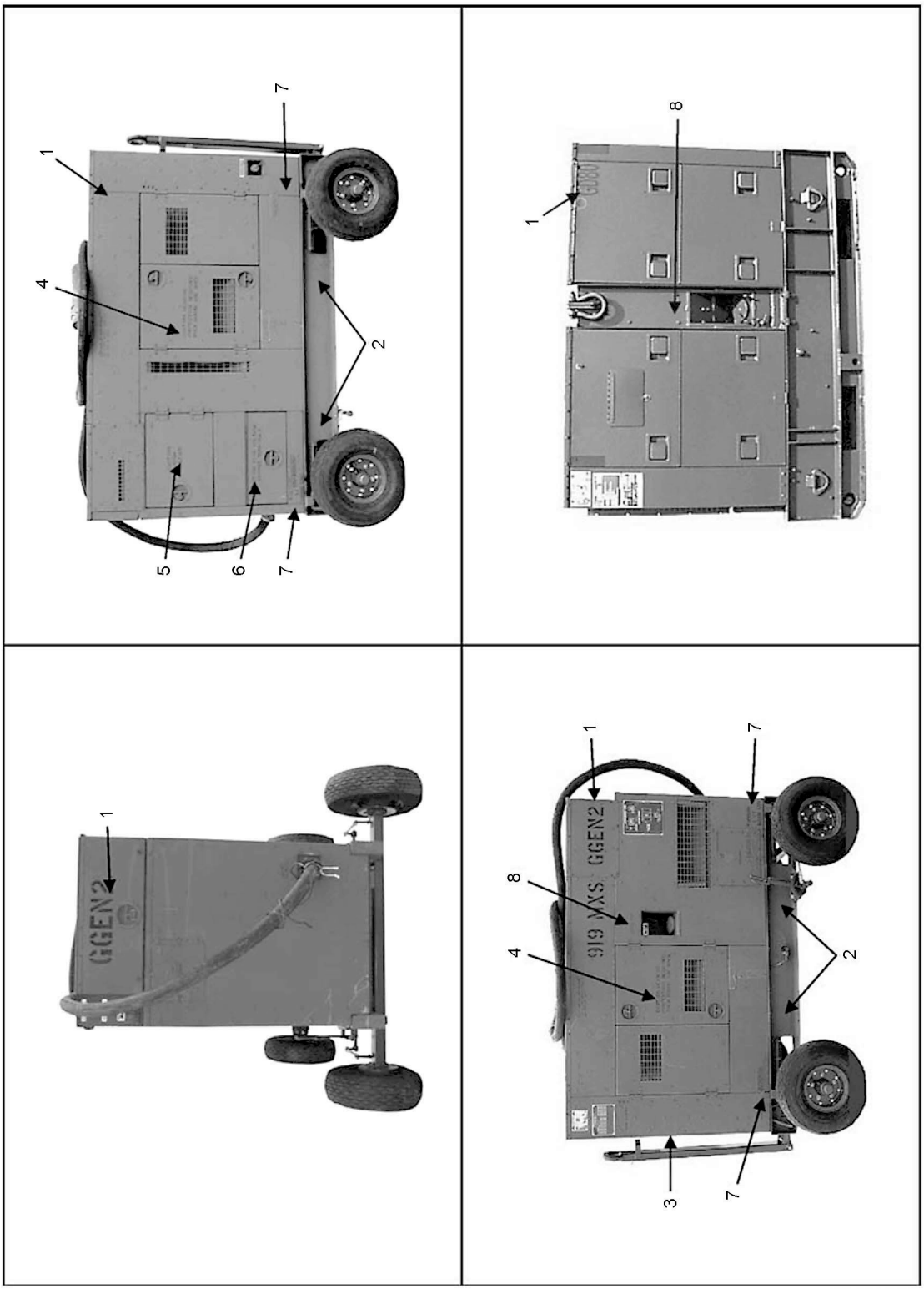

TO-35-1-18-040

Figure 2-37. MEP Generators

Legend for Figure 2-37			
Index No.	Markings	Size	Color*
1	Field numbers	4 inch	Black
2	Tire pressure XX PSI	1/2 inch	Black
3	Maximum tow speed 15 MPH	1/2 inch	Black
4	Caution: Hearing protection required	1/2 inch	Black
5	Caution: High voltage	1/2 inch	Black
6	Caution: High voltage output terminals	1/2 inch	Black
7	Tiedown lift 10,000 pounds	1/2 inch	Black
8	Diesel fuel (As applicable)	1 inch	Black
* - Standard caution/informational marking color will be non-reflective black. Standard safety/warning marking color will be non-reflective red.			

NOTE

- Figure 2-37 includes photos of various models of MEP generators.
- Markings apply to all MEP generator models, as required.

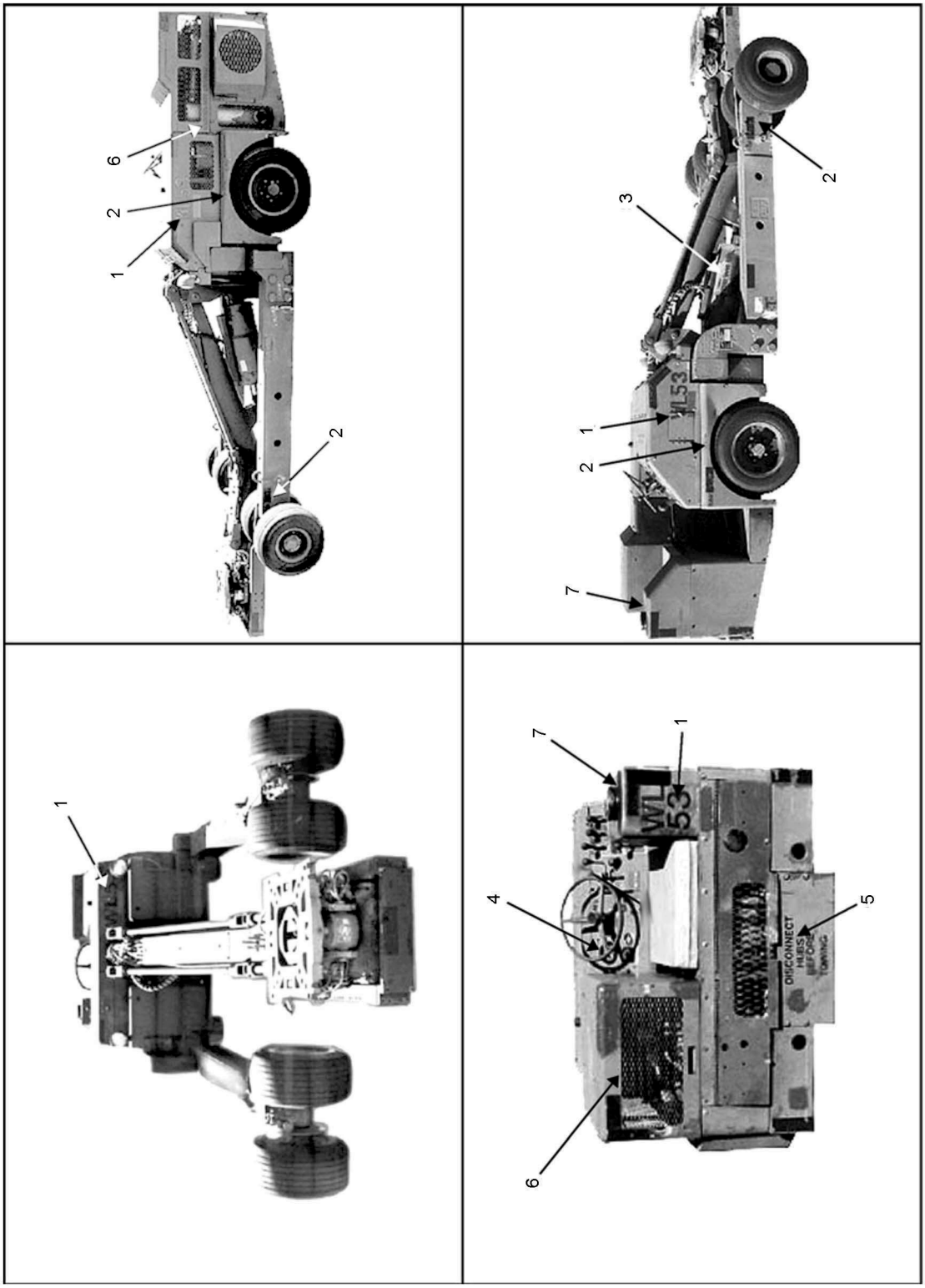

TO-35-1-18-041

Figure 2-38. MHU-83C/E Bomblift Truck (Sheet 1 of 2)

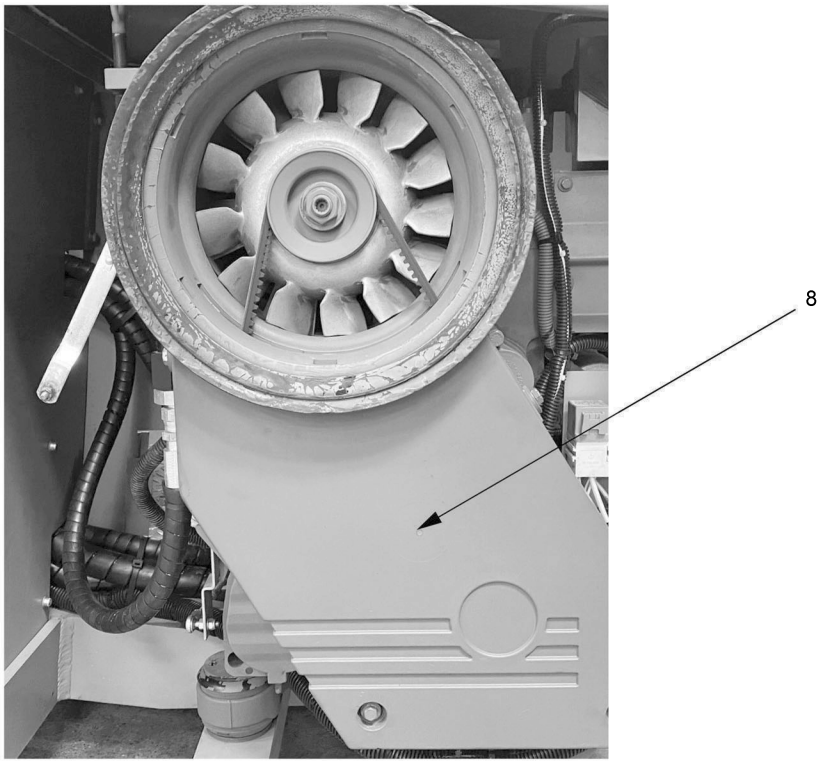

TO-35-1-18-042

Figure 2-38. MHU-83C/E Bomblift Truck (Sheet 2)

Legend for Figure 2-38			
Index No.	Markings	Size	Color*
1	Field numbers	4 inch	Black
2	Tire pressure XX PSI	1/2 inch	Black
3	6,700 pound weight capacity	1 inch	Black
4	Parking brake on/off	1/2 inch	Black
5	Disconnect hubs before towing	1/2 inch	Black
6**	Danger: Hot exhaust	1 inch	Red
7	JP-8	1 inch	Black
8***	Warning: Do not operate unit with cover removed	1/2 inch	Red
* - Standard caution/informational marking color will be non-reflective black. Standard safety/warning marking color will be non-reflective red.			
** - If unit has been modified for rear engine mounted exhaust, place stencil accordingly on engine cover over exhaust outlet.			
*** - For MHU-83 D/E and MHU-83 C/D/E models only, stencil shall be placed on engine V-belt cover.			

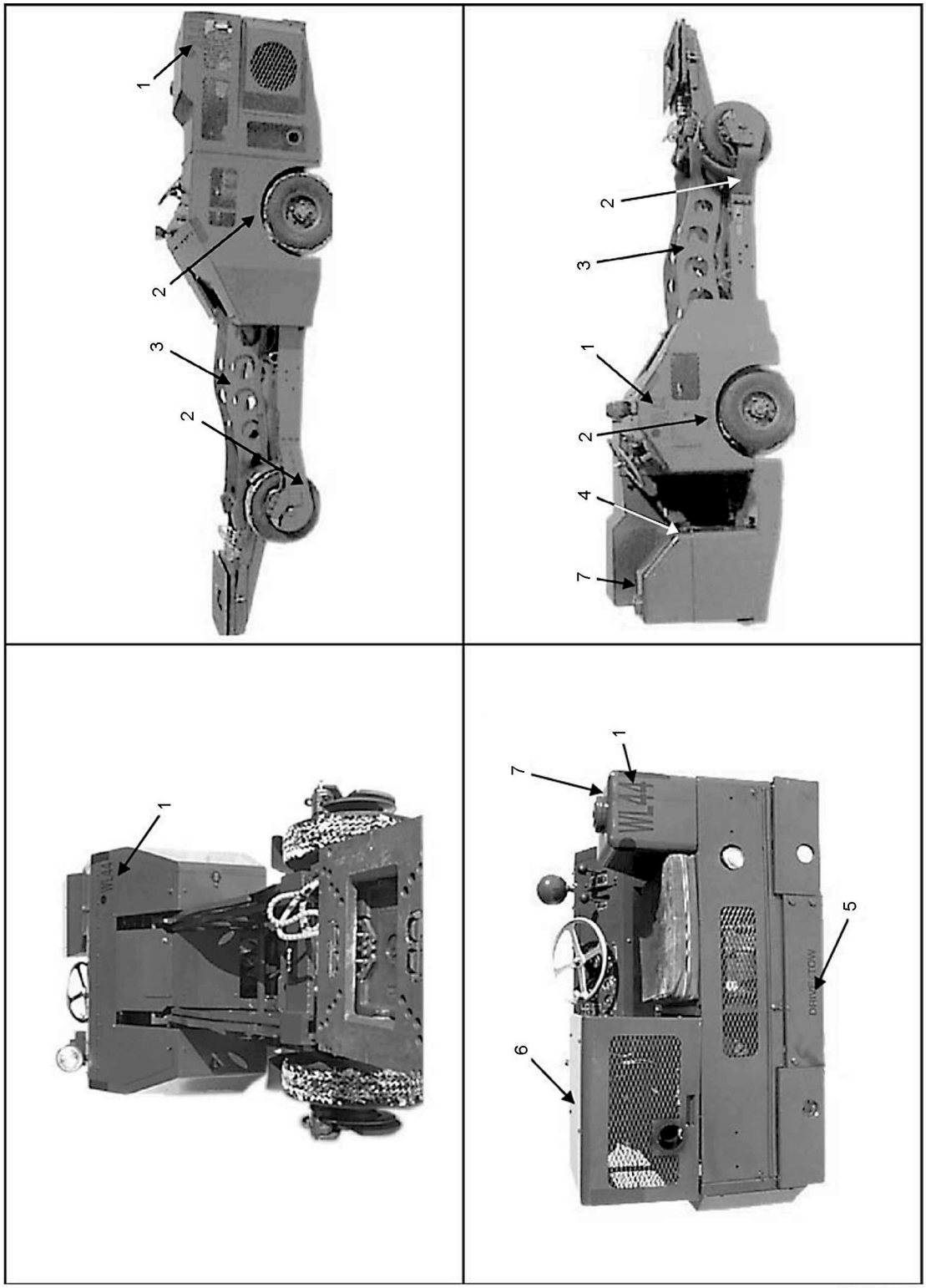

TO-35-1-18-043

Figure 2-39. MJ-1B Bomblift Truck (Sheet 1 of 2)

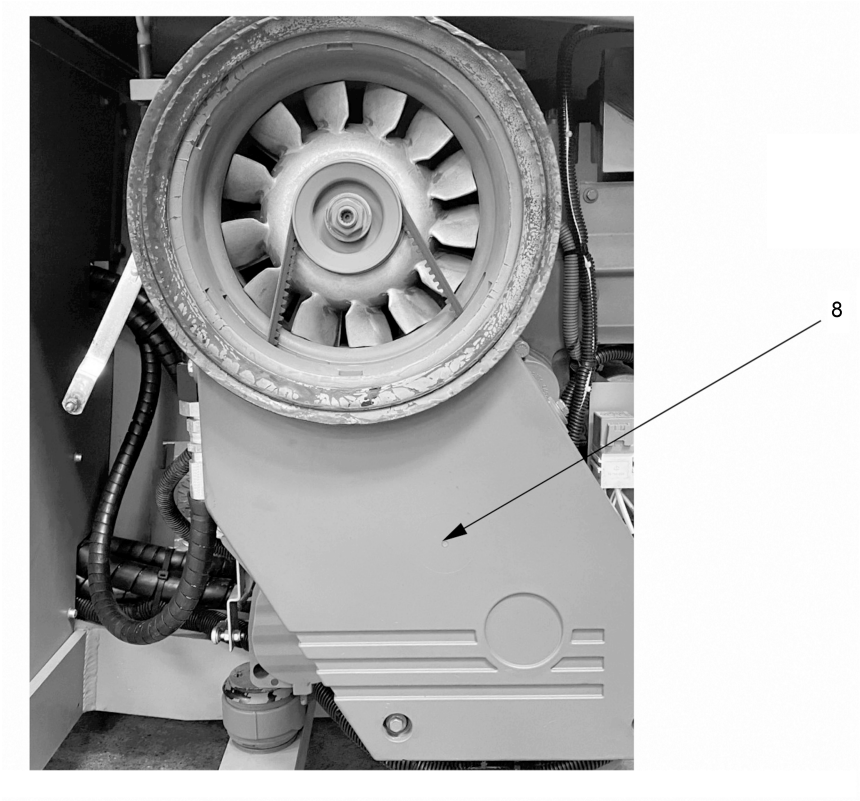

Figure 2-39. MJ-1B Bomblift Truck (Sheet 2)

Legend for Figure 2-39			
Index No.	Markings	Size	Color*
1	Field numbers	4 inch	Black
2	Tire pressure XX PSI	1/2 inch	Black
3	3,000 pound weight capacity	1 inch	Black
4	Parking brake on/off	1/2 inch	Black
5	Drive/tow	1/2 inch	Black
6**	Danger: Hot exhaust	1 inch	Red
7	JP-8	1 inch	Black
8***	Warning: Do not operate unit with cover removed	1/2 inch	Red
* - Standard caution/informational marking color will be non-reflective black. Standard safety/warning marking color will be non-reflective red.			
** - If unit has been modified for rear engine mounted exhaust, place stencil accordingly on engine cover over exhaust outlet.			
*** - For MJ-1C and MJ-1B/C models only, stencil shall be placed on engine V-belt cover.			

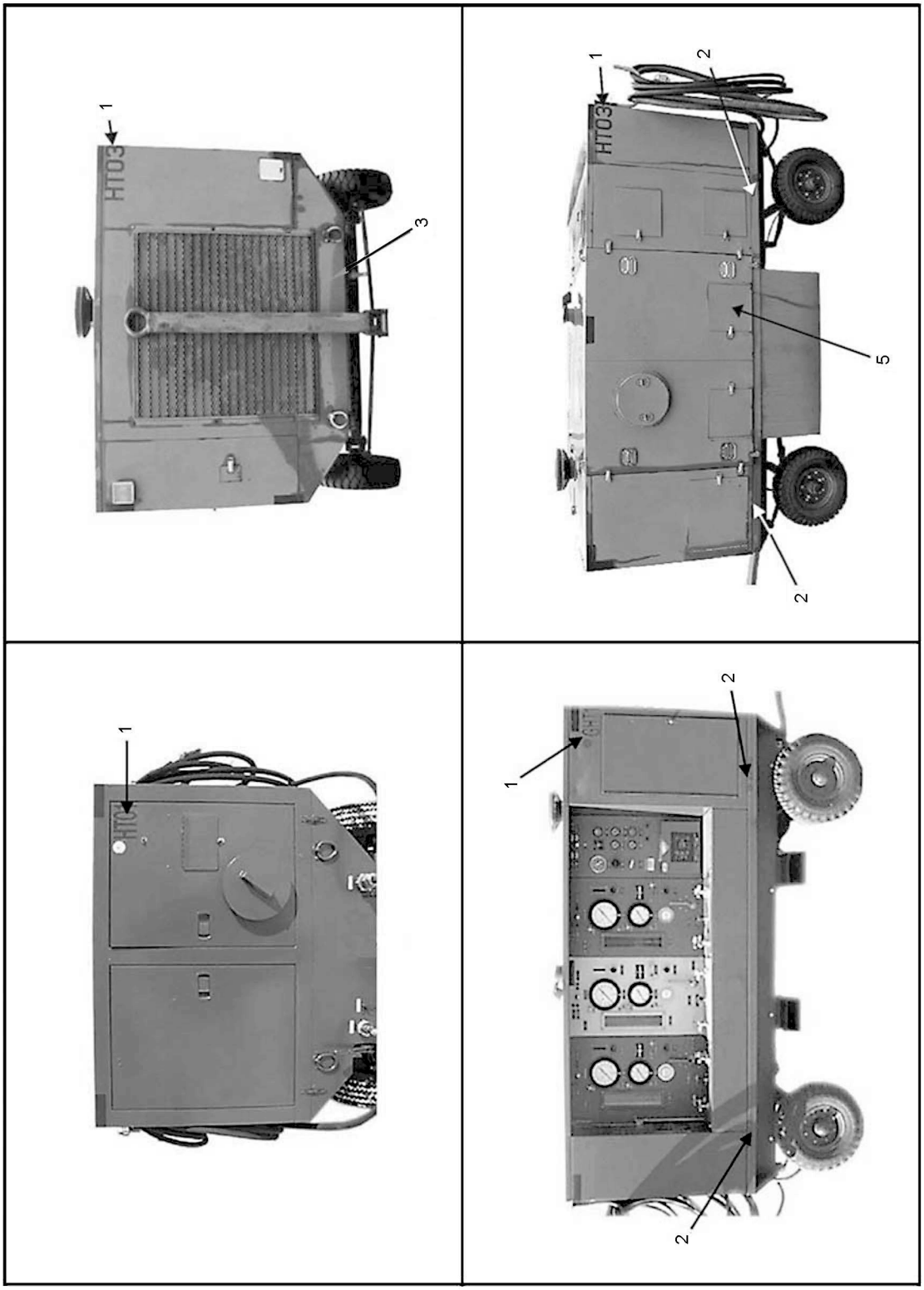

TO-35-1-18-045

Figure 2-40. Hydraulic Test Stand

Legend for Figure 2-40			
Index No.	Markings	Size	Color*
1	Field numbers	4 inch	Black
2	Tire pressure XX PSI[1]	1/2 inch	Black
3	Maximum tow speed 15 MPH	1/2 inch	Black
4**	MIL-PRF-83282 (For applicable hydraulic fluid in close proximity of filler cap)	1 inch	Black
5	JP-8 (Diesel models only)	1 inch	Black
* - Standard caution/informational marking color will be non-reflective black. Standard safety/warning marking color will be non-reflective red.			
** - Marking location not displayed.			
[1] - Verify tire pressure for different model test stands in accordance with individual TOs.			

NOTE

- Figure 2-40 includes views of various models of hydraulic test stands.
- Markings apply to all hydraulic test stand models.

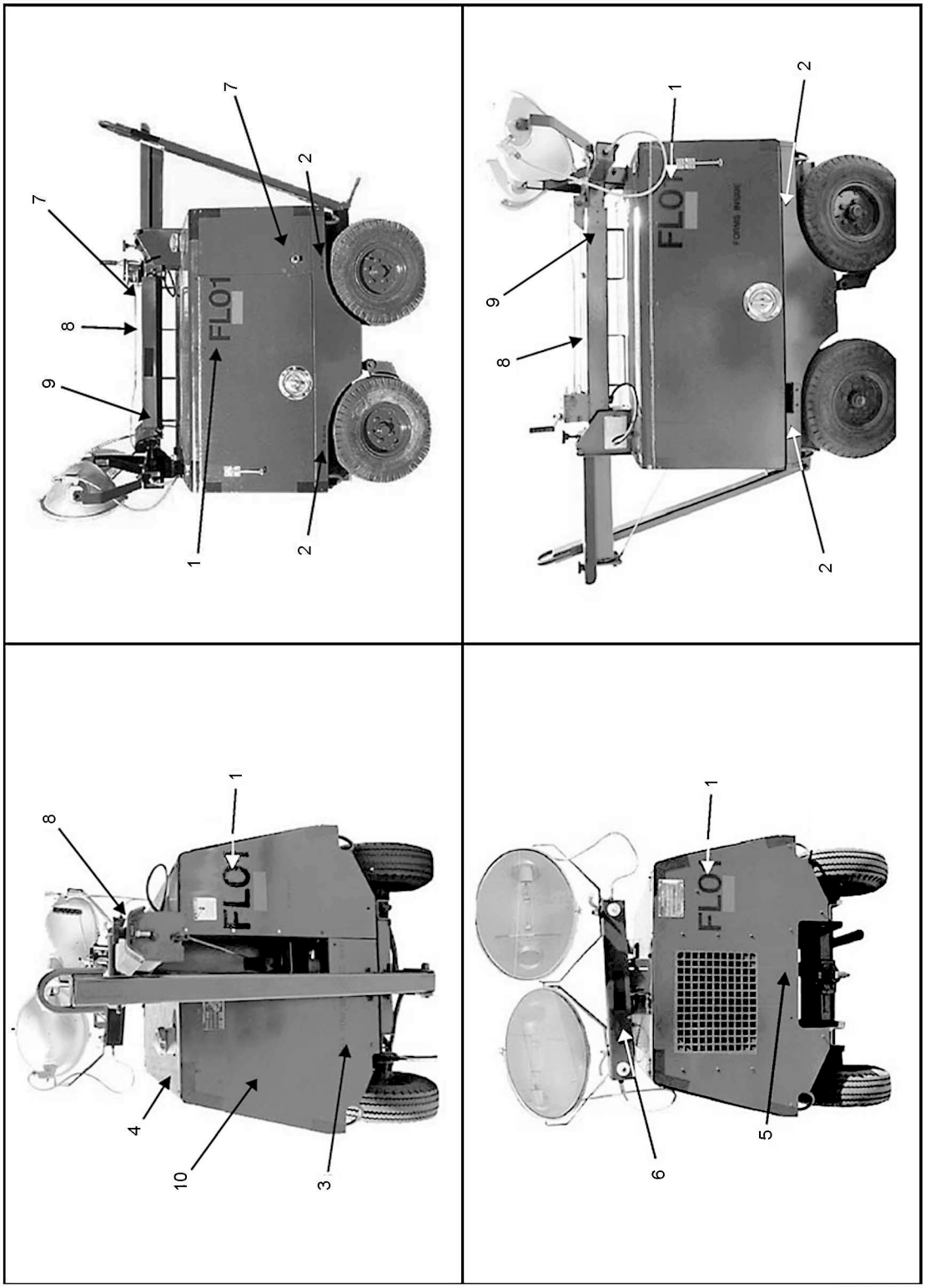

TO-35-1-18-046

Figure 2-41. Light Cart, FL-1D

Legend for Figure 2-41			
Index No.	Markings	Size	Color*
1	Field numbers	4 inch	Black
2	Tire pressure XX PSI	1/2 inch	Black
3	Maximum tow speed 15 MPH	1/2 inch	Black
4	JP-8	1 inch	Black
5	Caution: Before towing, latch pintle, close triplock, install lockpin	1/2 inch or decal PN 3613506	Black
6	Warning: Light fixtures may be hot, do not touch	1/2 inch	Red
7	Warning: Constant tension must be applied to winch cable to prevent tangling	1/2 inch	Red
8	Forklift	1/2 inch	Black
9	Warning: Engage mast support latch prior to forklifting	1/2 inch	Red
10	Caution: Lower mast before towing	1/2 inch	Black
* - Standard caution/informational marking color will be non-reflective black. Standard safety/warning marking color will be non-reflective red.			

Table 2-1. Leading Particulars, Model FL-1D Floodlight

Characteristics	Values
Complete Unit:	
Dimensions:	
Length (Tow bar lowered)	118 inches
(Tow bar raised)	80 inches
Width	48 inches
Height (Mast lower)	65.5 inches
(Mast raised)	144 inches
Shipping weight	1,545 pounds (dry)
Shipping cubage	145.6 cubic feet
Performance:	
Illumination:	
Lamps:	(2) 1,000 Watts (W), clear BT-37 Metal Halide
Illumination (per lamp)	110,000 lumens per lamp
Fuel consumption - W2 lamps on (JP-8)	36 hours
Equipment:	
Engine:	
Manufacturer	Kubota
Model	D905-EBG1
Type	Vertical, water cooled, naturally aspirated, 4 cycle diesel
Cylinders	3
Displacement	54.86 cubic inches
Power at Revolutions Per Minute (RPM)	10.5 at 1,800 RPM
Fuel system	Direct injection diesel
Fuel tank capacity	13.5 gallons
Starting system	12 Volts Direct Current (VDC)
Compression ratio	22:1
Oil capacity	5.39 quarts
Lubrication	Forced circulation with paper element filter
Cooling system capacity	1.3 gallons
Cooling system	Forced circulation, pressurized radiator

Table 2-1. Leading Particulars, Model FL-1D Floodlight - Continued

Characteristics	Values
Safety systems: High coolant temperature and low oil pressure shutdown standard equipment.	
Fuel requirements:	
Number (No.) 2 Diesel Fuel Oil (SAE J313 Jun 87) according to ASTM D975, DF-1, DF-2, DF-A, JP-5, JP-8, Jet A and/or Jet A1. Refer to Kubota Operators Manual for more detailed information.	
Battery charging system:	
Alternator type	Internal Integrated Circuit (IC) voltage regulator
Charging range	13.3-14.7 VDC
Generator:	
Model	(Continuous Duty) 6 kilowatt (kW)
Manufacturer	Unicor Federal Prison Industries, Inc.
Construction	Brushless Excitation
Speed: 60 Hertz (Hz)	1,800 RPM
Cooling	Air cooled
Insulation	Class F
Voltage response	0.1 second
Insulation class:	
Rotor	Class H
Stator	Class F
Flood light assembly:	
Fixture	SHO 1,000
Lamps	BT-37
Lumen rating	110,000 (per fixture)
Warm-up time	2-4 minutes
Restart time	10-15 minutes
Trailer assembly:	
Frame	Welded steel
Front axle	Solid mounted, steerable wheels with hinged tow bar
Rear axle	Solid mounted
Brakes	Lever operated, friction parking brake acting on rear wheels
Tires	6.00 x 9 inch, tube type, load range C, maximum load 1120 pounds
Inflation pressure cold	30±5 Pounds-force per Square Inch (PSI)

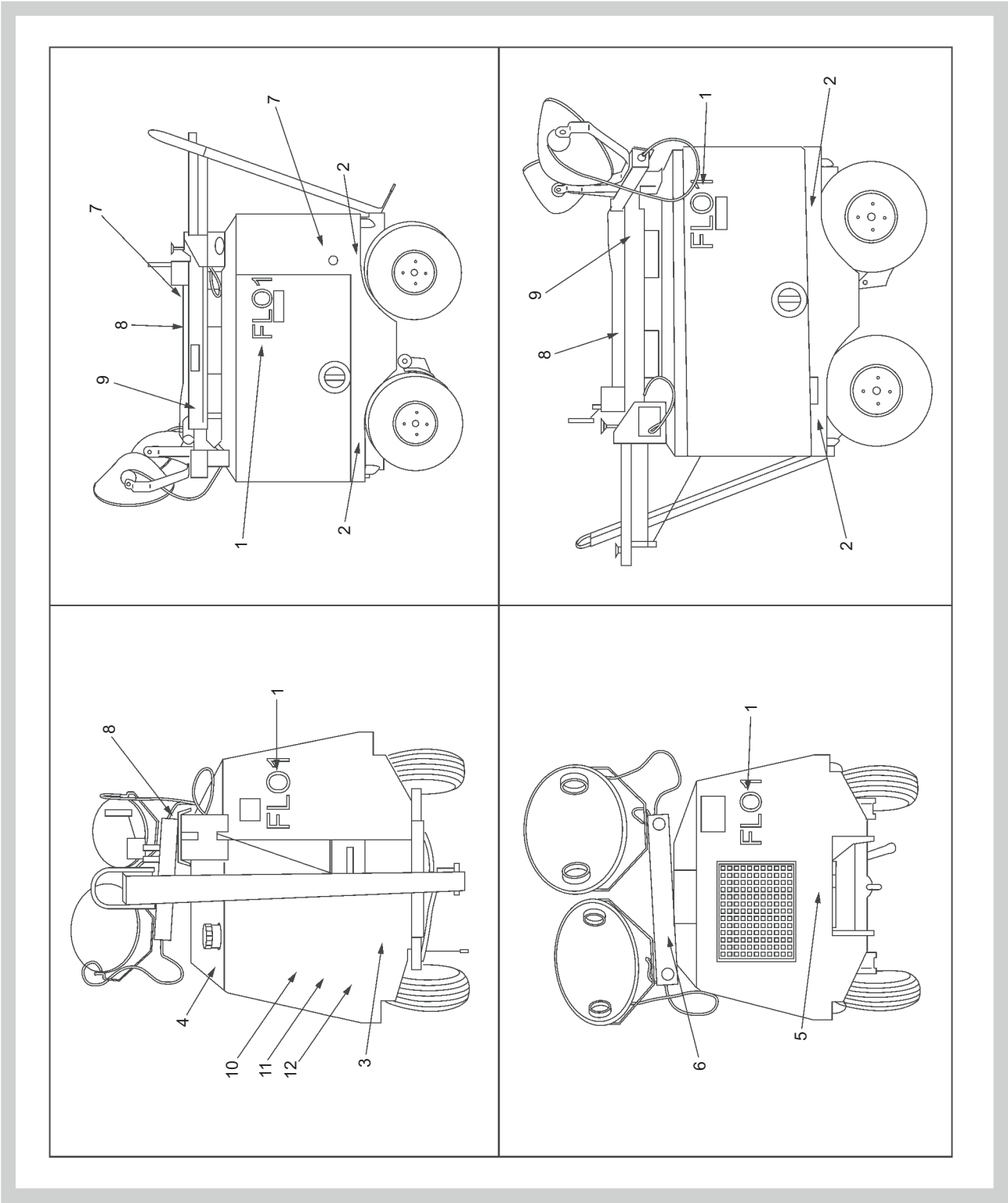

TO-35-1-18-057

Figure 2-42. Light Cart, FL-1D

Legend for Figure 2-42			
Index No.	Markings	Size	Color*
1	Field numbers	4 inch	Black
2	Tire pressure XX PSI	1/2 inch	Black
3	Max tow speed 15 Miles Per Hour (MPH)	1/2 inch	Black
4	JP-8	1 inch	Black
5	Caution Before towing latch pintale close triplock install lock pin	1/2 inch or decal, Part Number (PN) 3613506	Black
6	Warning Light fixtures may be hot do not touch	1/2 inch	Red
7	Warning Constant tension must be applied to winch cable to prevent tangling	1/2 inch	Red
8	Forklift	1/2 inch	Black
9	Warning Engage mast support latch prior to fork lifting	1/2 inch	Red
10	Caution Lower mast before towing	1/2 inch	Black
11	Mast will only be supported by lifting cable for raising and lowering	1/2 inch	Red
12	Position drawbar to the left or the right prior to raising or lowering the mast	1/2 inch	Red
* - Standard caution/informational marking color will be non-reflective black. Standard safety/warning color will be nonreflective red.			

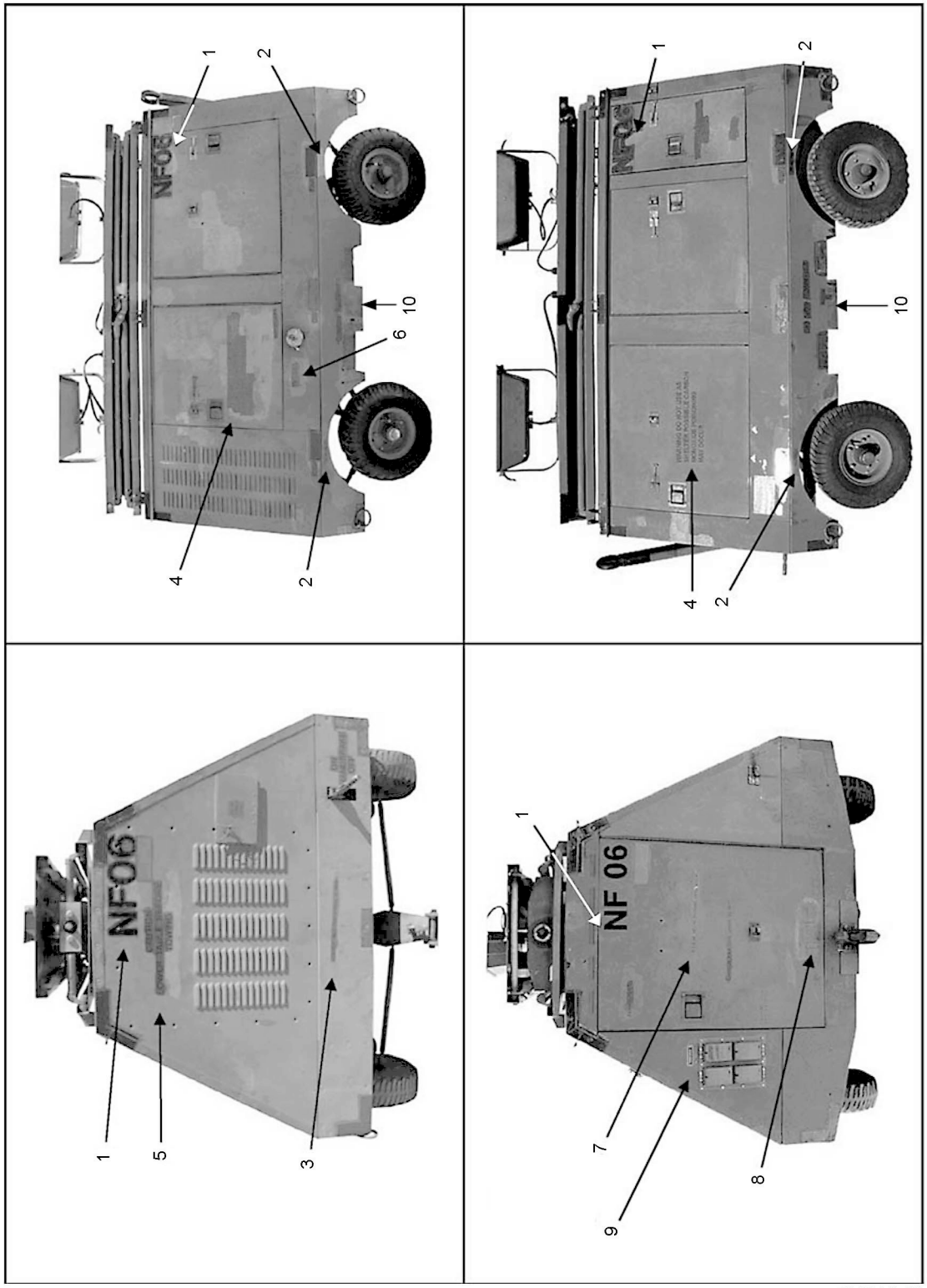

TO-35-1-18-047

Figure 2-43. NF-2D Light Cart, Diesel

Legend for Figure 2-43			
Index No.	Markings	Size	Color*
1	Field numbers	4 inch	Black
2	Tire pressure XX PSI	1/2 inch	Black
3	Maximum tow speed 15 MPH	1/2 inch	Black
4	Warning: Do not use as a shelter, possible carbon monoxide poisoning may occur	1 inch	Red
5	Caution: Lower table before towing	1/2 inch	Black
6	JP-8	1 inch	Black
7	Door must be open during operation	1/2 inch	Black
8	Caution: Before towing, latch pintle, close triplock, install lockpin	1/2 inch or decal PN 3613506	Black
9	Caution: Non-GFCI protected outlet, do not use for hand tools	1/2 inch	Black
10	Warning: Do not fork lift here	1 inch	Red
* - Standard caution/informational marking color will be non-reflective black. Standard safety/warning marking color will be non-reflective red.			

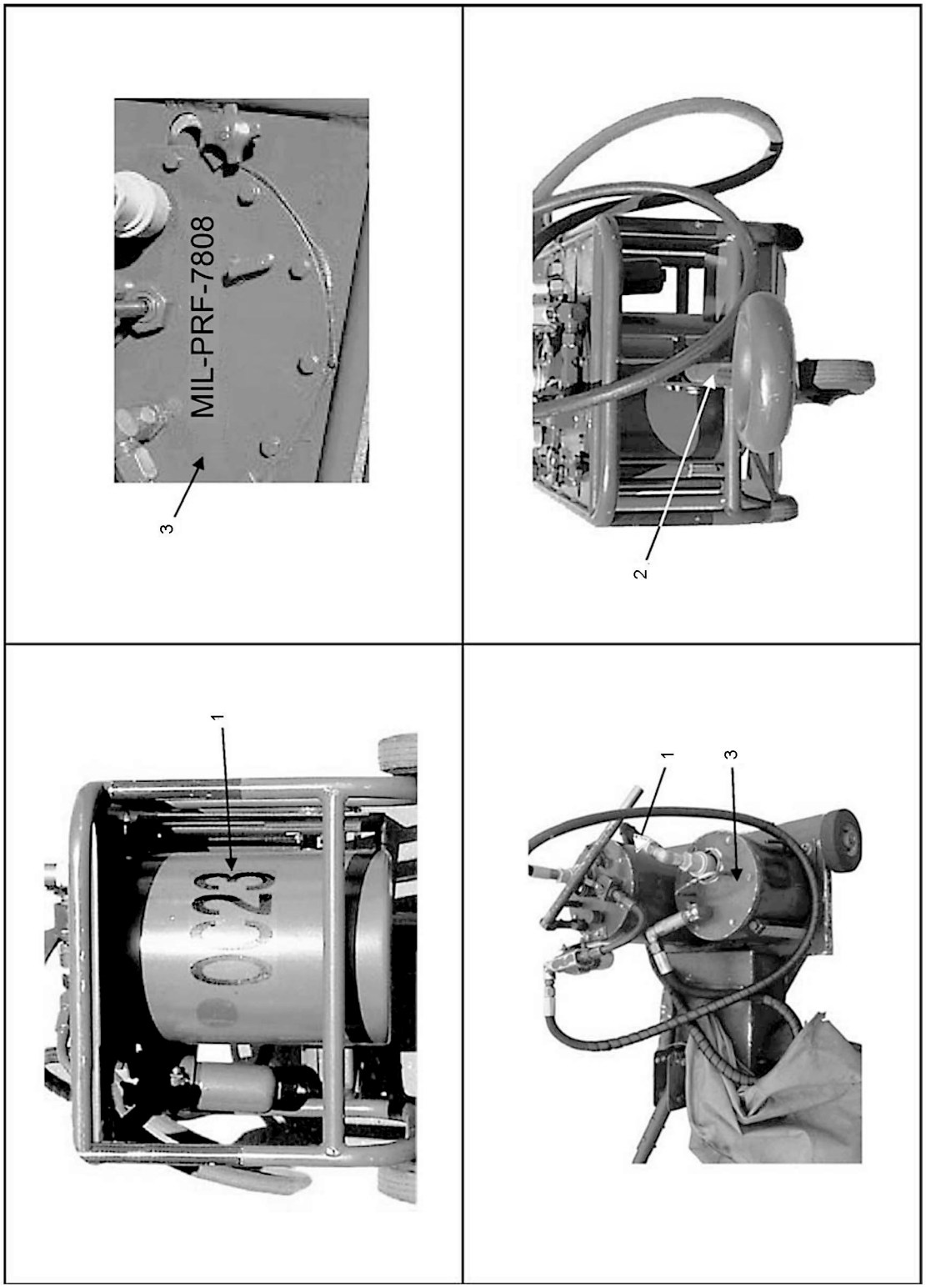

TO-35-1-18-048

Figure 2-44. Oil Cart

Legend for Figure 2-44			
Index No.	Markings	Size	Color*
1	Field numbers	4 inch	Black
2	Maximum tow speed 5 MPH	1/2 inch	Black
3	MIL-PRF-7808 (or applicable oil)	1/2 inch	Black
* - Standard caution/informational marking color will be non-reflective black. Standard safety/warning marking color will be non-reflective red.			

NOTE

- Figure 2-44 includes views of various models of the oil cart.
- Markings apply to all oil cart models.

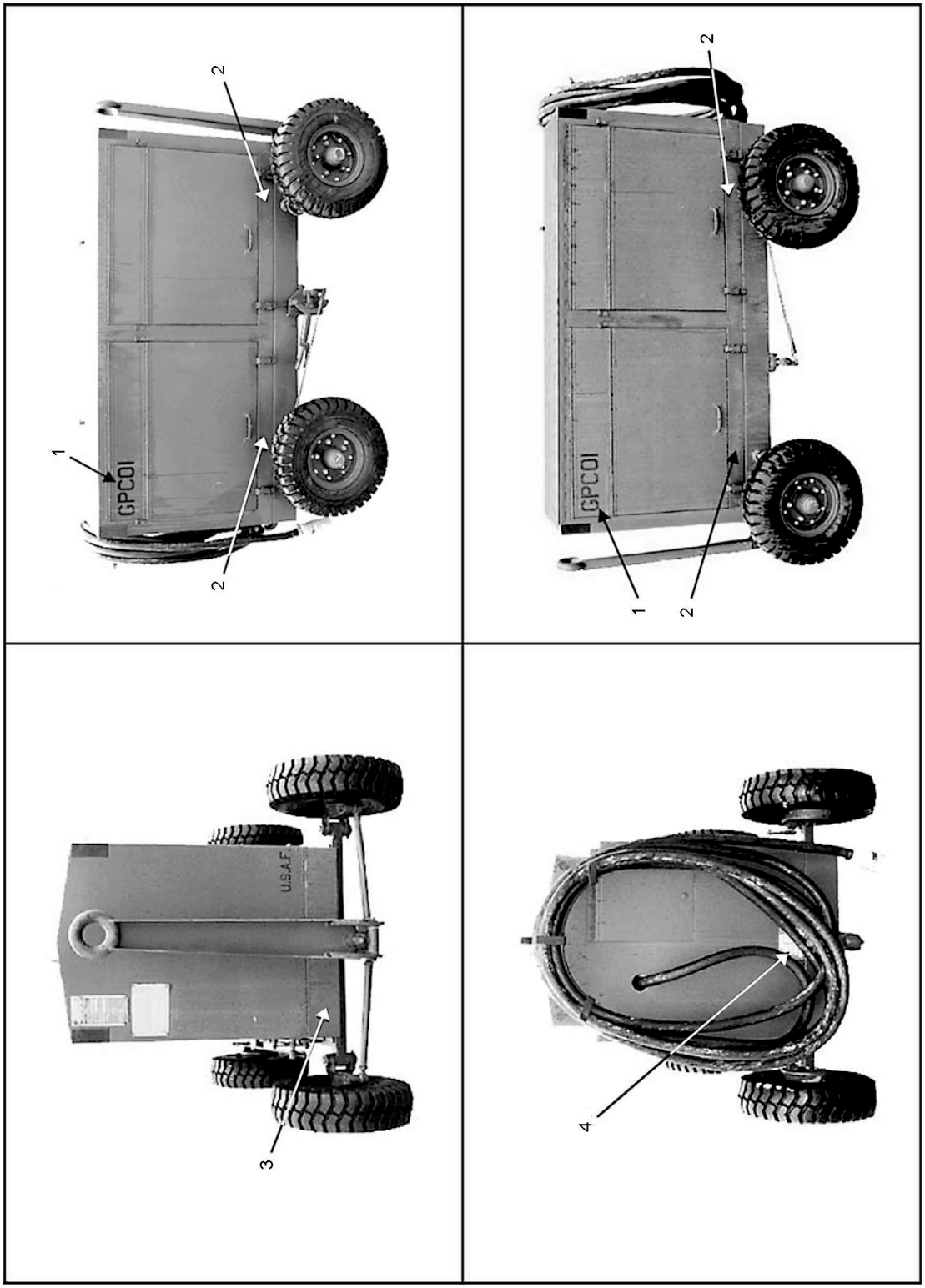

TO-35-1-18-049

Figure 2-45. Purging Unit GSU-62M LOX Storage

Legend for Figure 2-45			
Index No.	Markings	Size	Color*
1	Field numbers	4 inch	Black
2	Tire pressure XX PSI	1/2 inch	Black
3	Maximum tow speed 15 MPH	1/2 inch	Black
4	Caution: Before towing, latch pintle, close triplock, install lockpin	1/2 inch or decal PN 3613506	Black
* - Standard caution/informational marking color will be non-reflective black. Standard safety/warning marking color will be non-reflective red.			

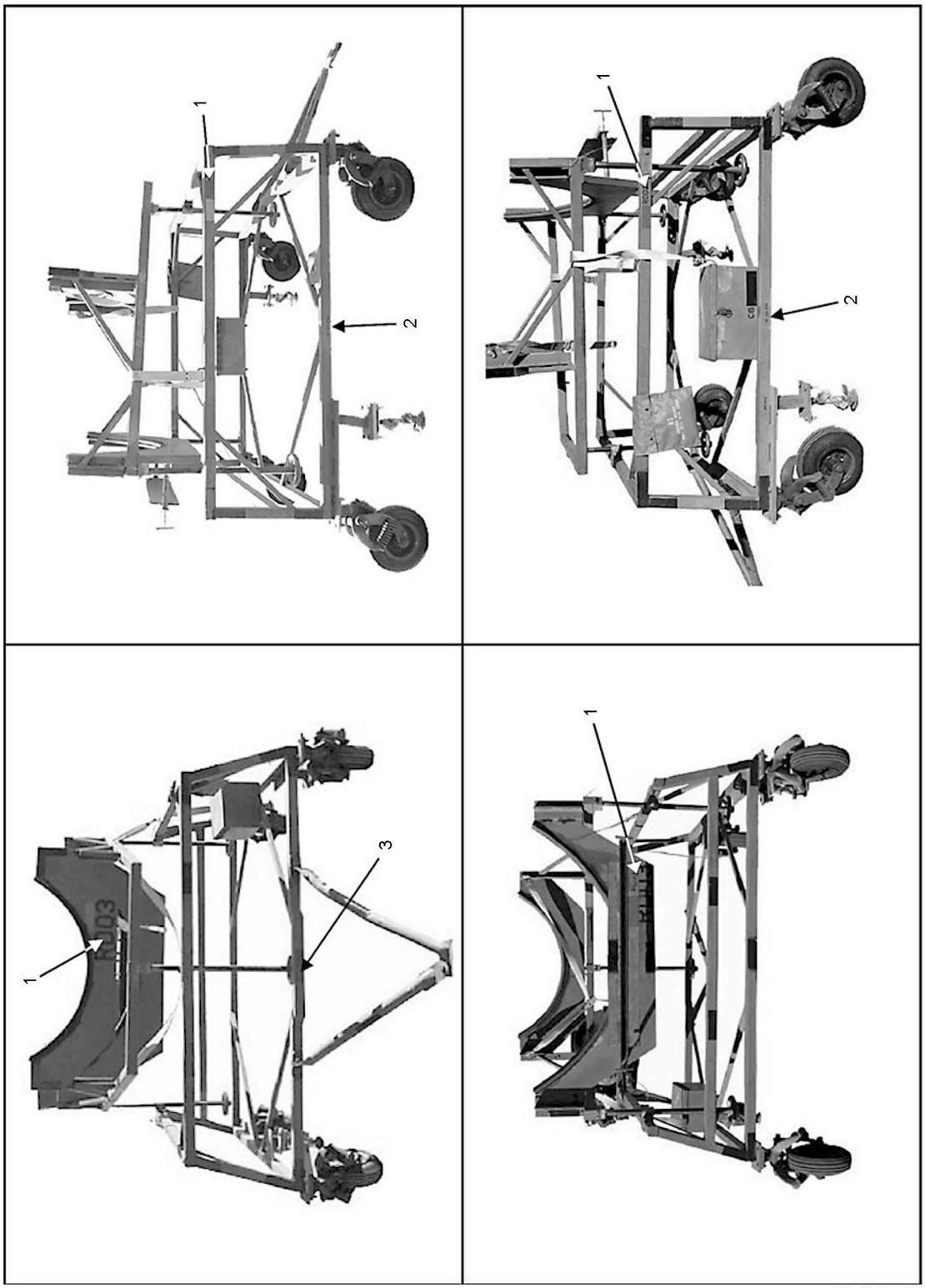

TO-35-1-18-050

Figure 2-46. Radome Dolly

Legend for Figure 2-46			
Index No.	Markings	Size	Color*
1	Field numbers	4 inch	Black
2	Tire pressure XX PSI	1/2 inch	Black
3	Maximum tow speed 5 MPH	1/2 inch	Black
* - Standard caution/informational marking color will be non-reflective black. Standard safety/warning marking color will be non-reflective red.			

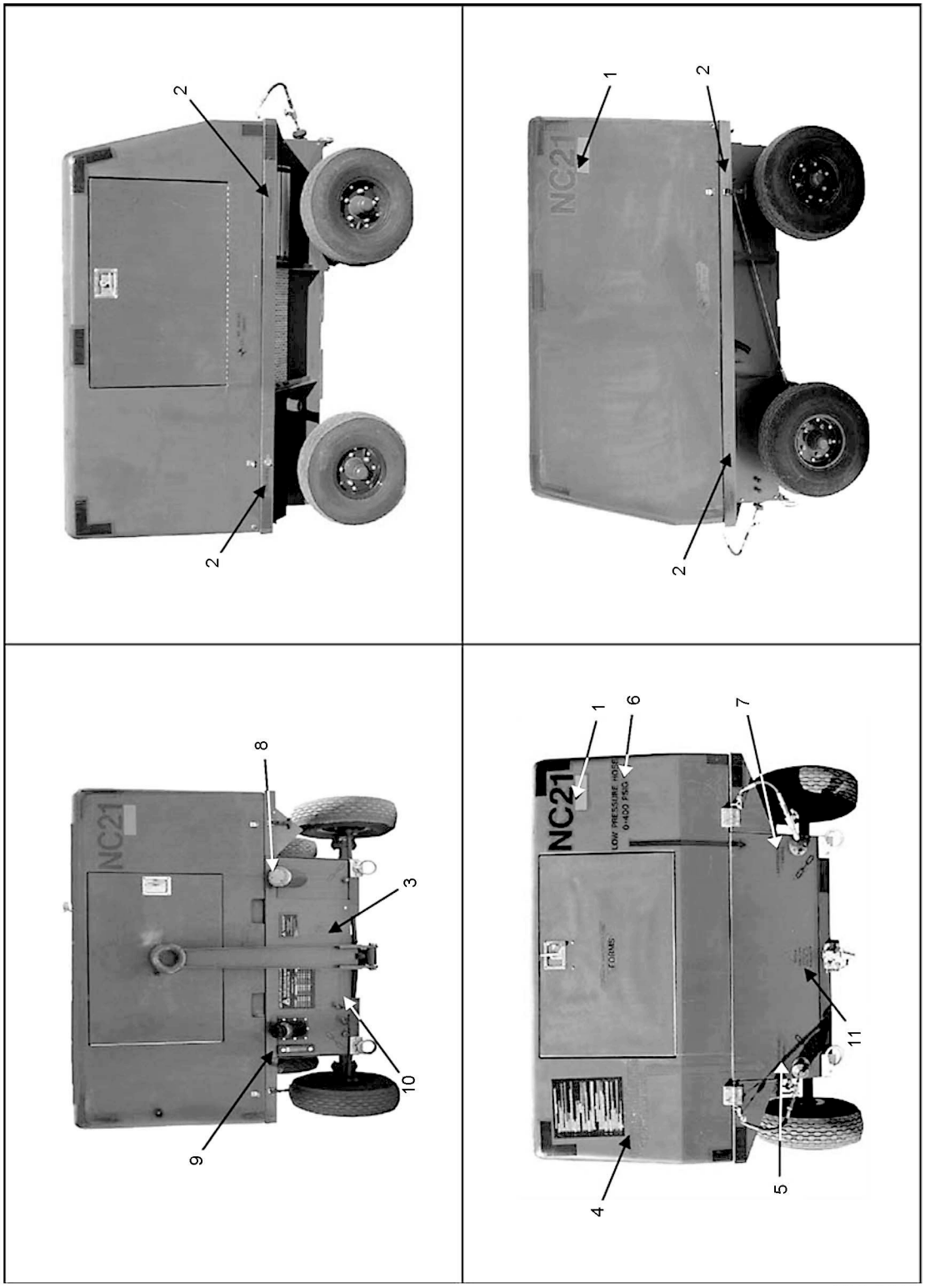

TO-35-1-18-051

Figure 2-47. Self-Generating Nitrogen Cart

Legend for Figure 2-47			
Index No.	Markings	Size	Color*
1	Field numbers	4 inch	Black
2	Tire pressure XX PSI	1/2 inch	Black
3	Maximum tow speed 15 MPH	1/2 inch	Black
4	Warning: High pressure hose 400 - 4000 Pounds-force per Square Inch, Gauge (PSIG)	1 inch	Red
5	High pressure hose 400 - 4000 PSIG	1/2 inch	Black
6	Low pressure hose 0 - 400 PSIG	1 inch	Black
7	Low pressure hose 0 - 400 PSIG	1/2 inch	Black
8	JP-8	1 inch	Black
9	Hydraulic fluid only	1/2 inch	Black
10	Condensate drain	1/2 inch	Black
11	Caution: Before towing, latch pintle, close triplock, install lockpin	1/2 inch or decal PN 3613506	Black
* - Standard caution/informational marking color will be non-reflective black. Standard safety/warning marking color will be non-reflective red.			

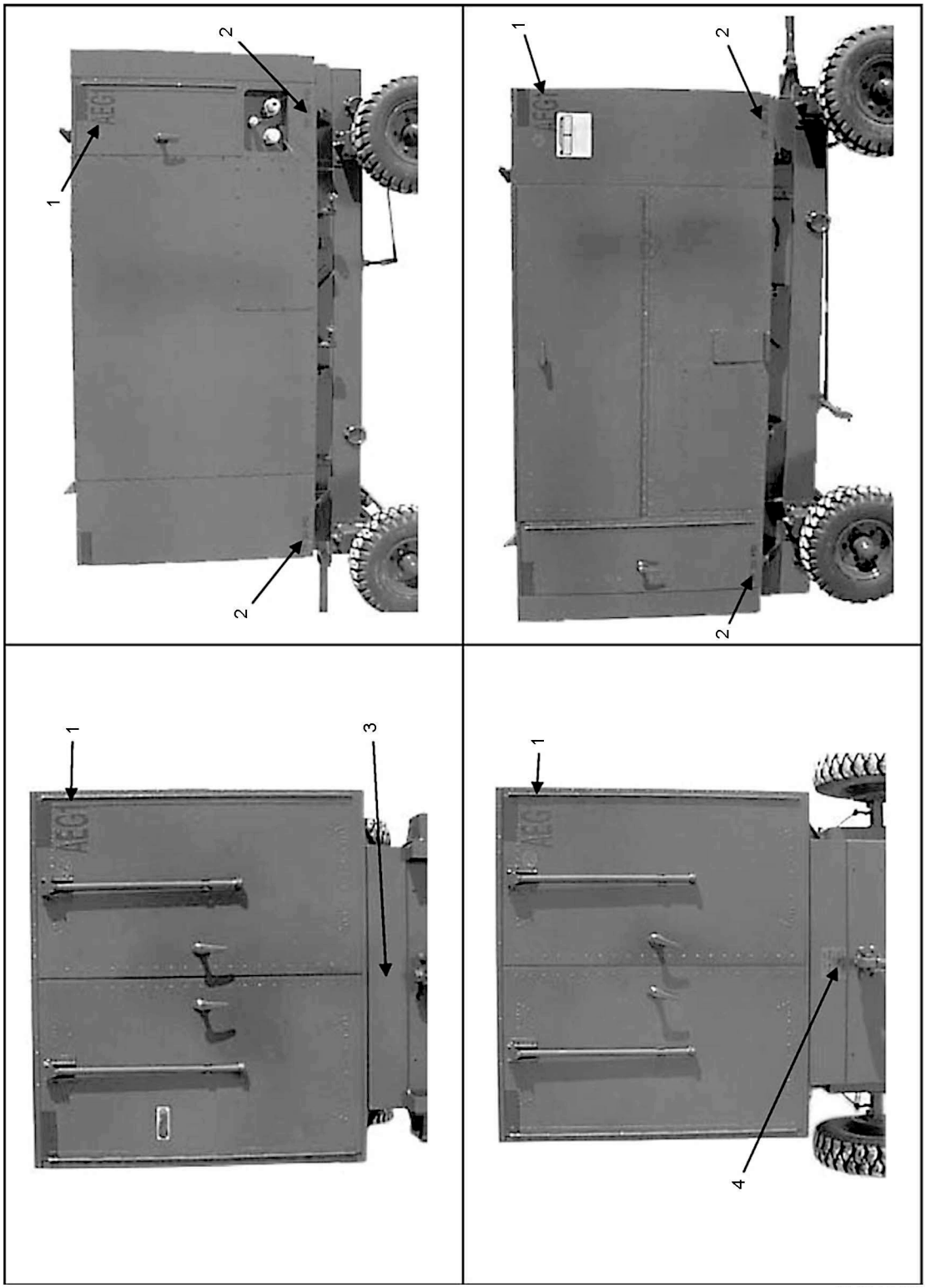

TO-35-1-18-052

Figure 2-48. Service Cart

Legend for Figure 2-48			
Index No.	Markings	Size	Color*
1	Field numbers	4 inch	Black
2	Tire pressure XX PSI	1/2 inch	Black
3	Maximum tow speed 15 MPH	1/2 inch	Black
4	Caution: Before towing, latch pintle, close triplock, install lockpin	1/2 inch or decal PN 3613506	Black
* - Standard caution/informational marking color will be non-reflective black. Standard safety/warning marking color will be non-reflective red.			

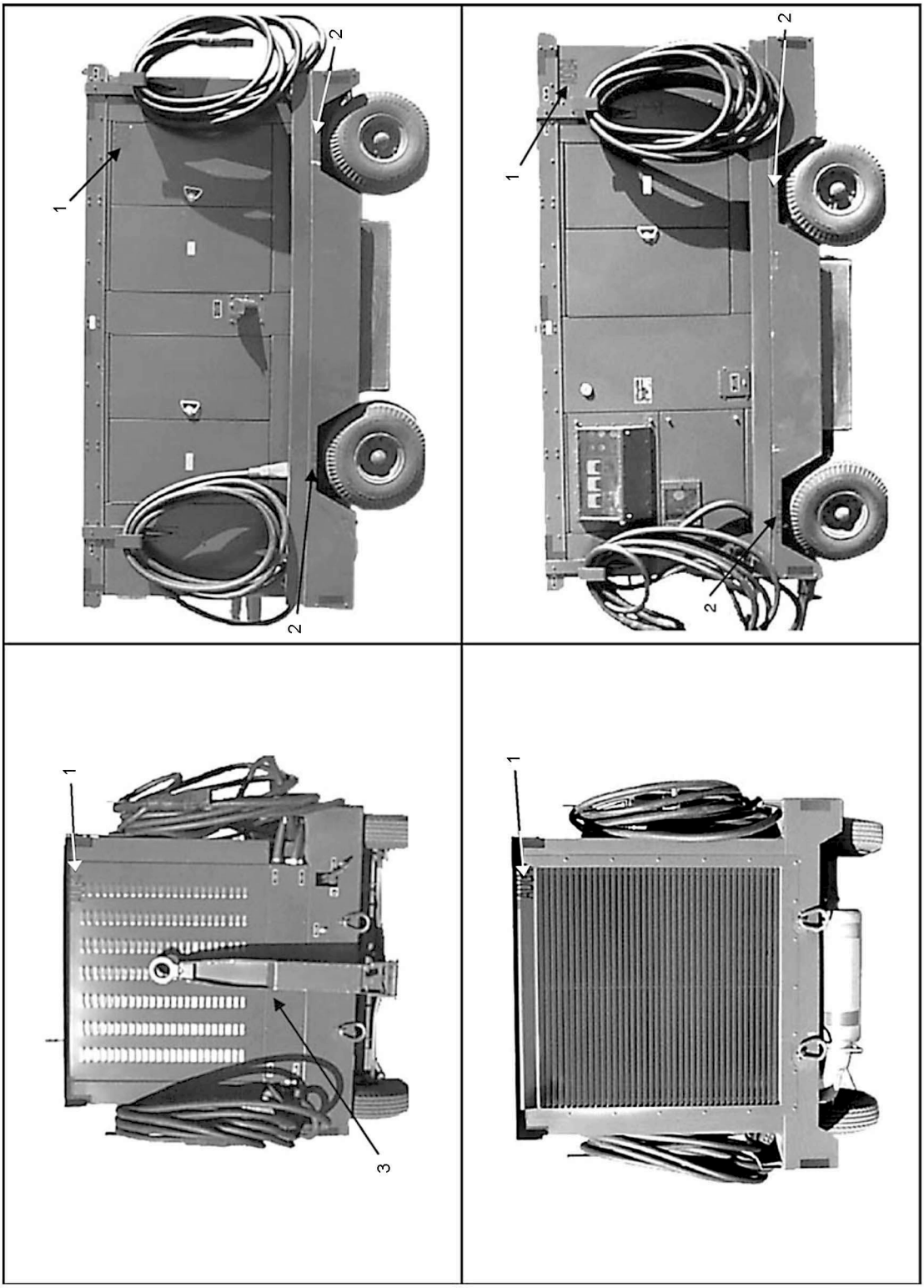

TO-35-1-18-053

Figure 2-49. Trielectron Generator

Legend for Figure 2-49			
Index No.	Markings	Size	Color*
1	Field numbers	4 inch	Black
2	Tire pressure XX PSI	1/2 inch	Black
3	Maximum tow speed 15 MPH	1/2 inch	Black
* - Standard caution/informational marking color will be non-reflective black. Standard safety/warning marking color will be non-reflective red.			

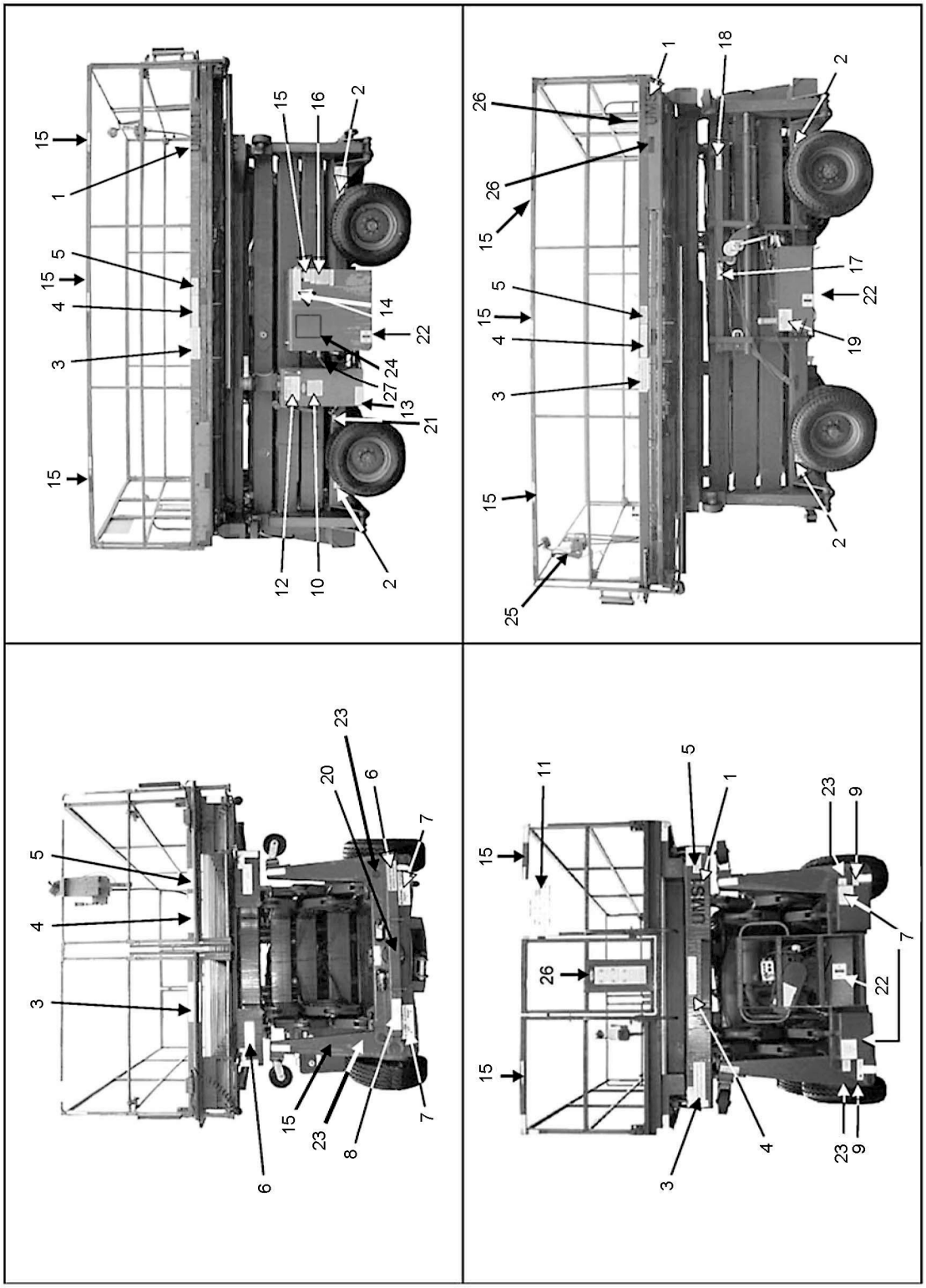

TO-35-1-18-054

Figure 2-50. Universal Maintenance Stand

Legend for Figure 2-50			
Index No.	Markings	Size	Color*
1	Field numbers	4 inch	Black
2	Tire pressure XX PSI	1/2 inch	Black
3	Maximum distributed platform load 2,000 pounds	1/2 inch	Black
4	Maximum load per rolling panel 250 pounds not to exceed 1,250 pounds overall	1/2 inch	Black
5	Warning: This platform not electrically insulated	1/2 inch	Red
6	Maximum towing speed 15 MPH	1/2 inch	Black
7	Caution: Always block frame before tying down Blocking point ↓ Tiedown point ↓	1/2 inch	Black
8	Towing instructions: 1. Check brake accumulator pressure 2. Chock wheels and turn emergency brake valve on 3. Install tongue and disengage drive line 4. Turn emergency brake valve off and remove chocks 5. Release hand brake 6. Tow, 15 MPH maximum 7. Reverse steps when towing is complete	1/2 inch	Black
9	Caution: Always use spreader bar when lifting (Black)	1/2 inch	Black
10	Danger: Lower platform completely when servicing machine. Never elevate platform unless machine is on firm level ground	1/2 inch	Red
11	Warning: Check hydraulic emergency brake valve for off position prior to operation	1/2 inch	Red
12	Hydraulic fluid level must be within sight gage when platform is fully lowered MIL-H-XXXX (As applicable)	1 inch	Black
13	Warning: Valve must remain open to operate unit (Stencil required only if reservoir has a shut-off valve)	1/2 inch	Black
14	Operating instructions: Manual lowered retract, emergency platform retract: 1. Move retract switch to retract 2. Release switch when platform is fully retracted Manual platform lower: 1. Check lower accumulator pressure 2. Move manual lower lever to lower 3. Return lever to off when lowering is complete	1/2 inch	Black
15	Danger: Guardrails must be raised to 42 inch height for normal operation	1/2 inch	Red
16	Emergency lowering: To lower: 1. Open valve ① by pushing knurled knob in and turning counterclockwise to position shown 2. Open valve ② by turning knob counterclockwise Note: Valves must be closed before raising platform Decal 10730-00-02 Emergency lowering controls inside Decal 10700-00-02	1/2 inch	Black
17	Maximum load 500 pounds	1/2 inch	Black
18	Maximum load 250 pounds	1/2 inch	Black
19	Fuel JP-8	1 inch 1/2 inch	Black Black
20	Caution: Do not exceed turning radius	1/2 inch	Black
21	Driveline disconnect	1/2 inch	Black
22	C | G GVW 14,660 pounds	1/2 inch	Black
23	Lift point	1/2 inch	Black
24	Caution: Set speed switch to low speed position within 15 feet of aircraft	1 inch	Black
25	Caution: Do not extend or retract platform with the stand in the fully lowered position. Raise stand to at least 2-1/2 feet before extending or retracting the platform	1/2 inch	Black
26	Danger: Decal mounted on both sides of gate PN 40450-000-02 1. Lanyard attachment point above the D-rings 2. Manual lowering valve and emergency retract switch inside on access door	 1/2 inch 1 inch	 Black Black

Legend for Figure 2-50			
Index No.	Markings	Size	Color*
	3. “Davit mount inside” both access doors	1 inch	Black
27	Hi/low speed	1/2 inch	Black
* - Standard caution/informational marking color will be non-reflective black. Standard safety/warning marking color will be non-reflective red.			

NOTE

- Verify correct stencils and placement in accordance with individual TOs.
- Reference individual TOs for decal package information.

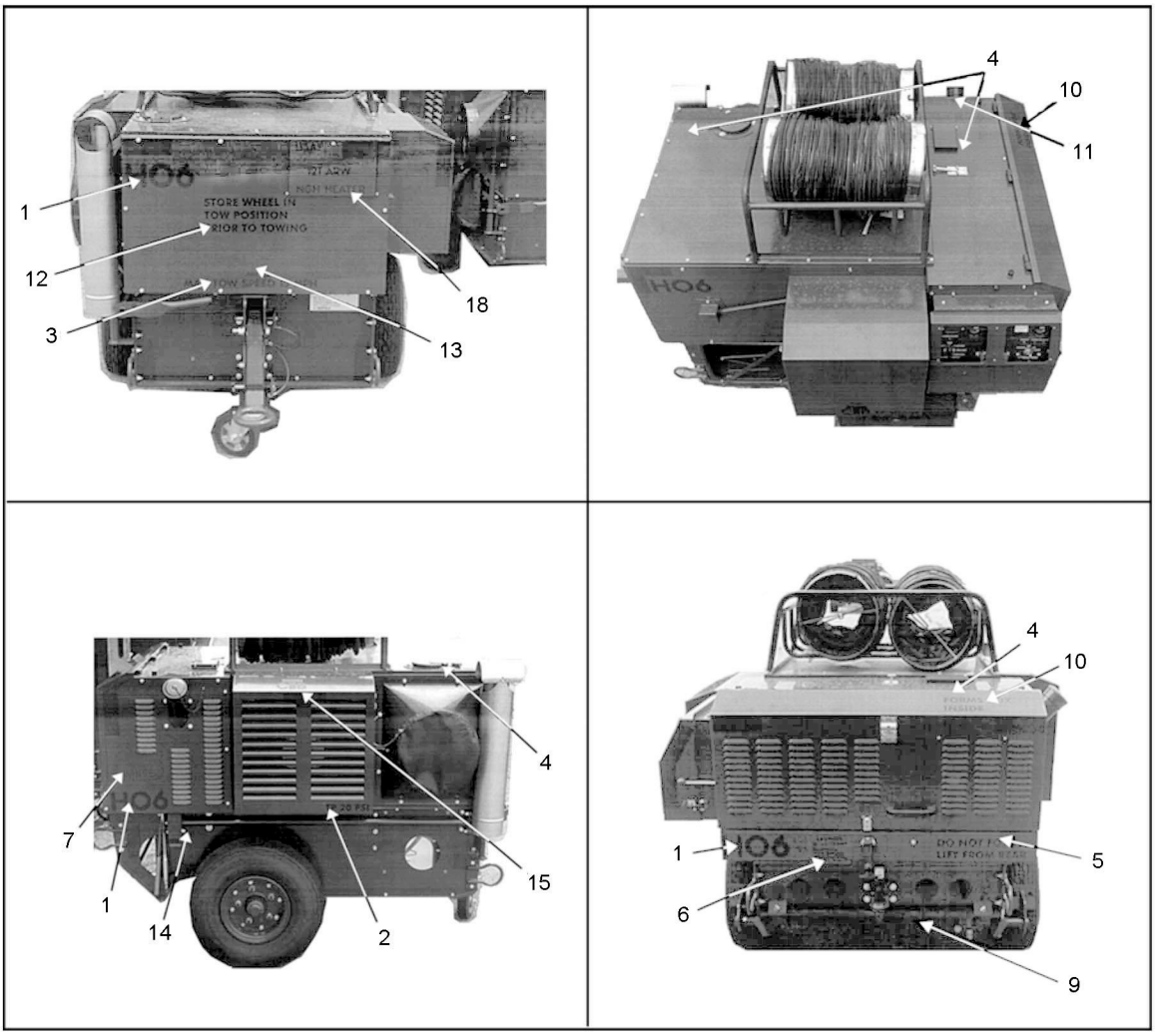

TO-35-1-18-055

Figure 2-51. New Generation Heater (Sheet 1 of 2)

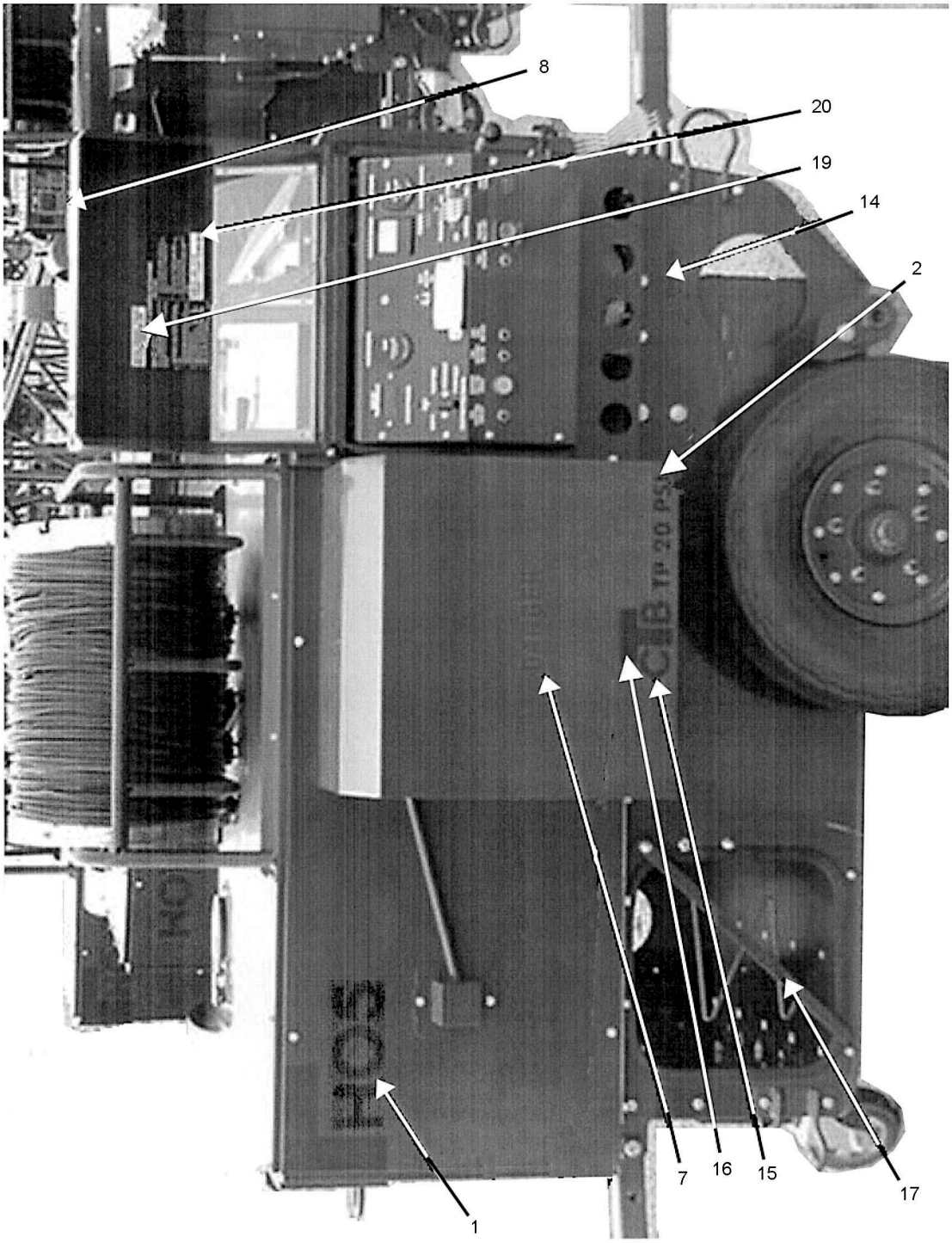

TO-35-1-18-056

Figure 2-51. New Generation Heater (Sheet 2)

Legend for Figure 2-51			
Index No.	Markings	Size	Color*
1	Field markings	3 inch	Black
2	Tire pressure XX PSI	1 inch	Black
3	Maximum tow speed 15 MPH	1 inch	Black
4	Danger: Hot exhaust	1 inch	Red
5	Do not forklift from rear	1 inch	Black
6	Caution: Before towing, latch pintle, close triplock and install lockpin	1/2 inch	Black
7	Danger: Unit unsafe in fuel vapor area	1 inch 1/2 inch	Red
8	Control panel	1 inch	Black
9	Fuel drain	1 inch	Black
10	Forms inside	1 inch	Black
11	JP-8	1 inch	Black
12	Store wheel in tow position prior to towing	1 inch	Black
13	FAW 100	1/2 inch	Black
14	RAW 900	1/2 inch	Black
15	CB	2 inch	Black
16	GW 1000	1/2 inch	Black
17	Duct storage	1/2 inch	Black
18	Mobility placard	1 inch	Black
19	Install exhaust ducts before starting	1/2 inch	Black
20	Remove exhaust ducts after shutdown	1/2 inch	Black
* - Standard caution/informational marking color will be non-reflective black. Standard safety/warning marking color will be non-reflective red.			