T.O. 00-25-203

TECHNICAL MANUAL

CONTAMINATION CONTROL OF AEROSPACE FACILITIES, U.S. AIR FORCE

F09603-72-D-1406-0167
F09603-89-C-2904
(ATOS)

BASIC AND ALL CHANGES HAVE BEEN MERGED TO MAKE THIS A COMPLETE PUBLICATION

DISTRIBUTION STATEMENT - Approved for public release; distribution is unlimited. Other request for this document should be referred to WR-ALC/LKC, Robins AFB GA 31098. Questions concerning technical content should be referred to WR-ALC/LKJTC, Robins AFB GA 31098.

Published under authority of the Secretary of the Air Force

1 DECEMBER 1972

CHANGE 15 - 24 OCTOBER 1992

INSERT LATEST CHANGED PAGES. DESTROY SUPERSEDED PAGES.

LIST OF EFFECTIVE PAGES

NOTE: The portion of the text affected by the changes is indicated by a vertical line in the outer margins of the page. Changes to illustrations are indicated by miniature pointing hands. Changes to wiring diagrams are indicated by shaded areas.

Dates of issue for original and changed pages are:

Original	0	1 December 1972	Change	8	3 December 1981
Change	1	1 October 1974	Change	9	20 January 1983
Change	2	15 November 1976	Change	10	26 January 1984
Change	3	4 October 1977	Change	11	21 March 1985
Change	4	11 December 1978	Change	12	30 December 1989
Change	5	28 November 1979	Change	13	20 August 1990
Change	6	8 July 1980	Change	14	1 March 1992
Change	7	31 March 1981	Change	15	24 October 1992

TOTAL NUMBER OF PAGES IN THIS PUBLICATION IS 82, CONSISTING OF THE FOLLOWING:

Page No.	*Change No.	Page No.	*Change No.	Page No.	*Change No.
Title	**15**	7-7	0		
A	**15**	7-8	1		
i - ii	0	7-8A	4		
iii	1	7-8B Blank	1		
iv Blank	1	8-1 - 8-2	1		
1-1	1	8-2A	4		
1-2 - 1-3	0	8-2B Blank	1		
1-4	7	8-3	5		
1-5	0	8-4	9		
1-6 Blank	0	8-5 - 8-6	4		
2-1	14	9-1 - 9-2	13		
2-2	**15**	9-3	1		
2-2A Deleted	14	9-4	0		
2-2B Blank Deleted	14	1A-1 - 1A-6	0		
2-3 - 2-4	**15**	2A-1 - 2A-5	0		
3-1	1	2A-6 Blank	0		
3-2	8				
3-2A	10				
3-2B Blank	4				
3-3	4				
3-4	8				
4-1 - 4-2	8				
5-1 - 5-5	0				
5-6	4				
5-7 - 5-8	0				
6-1 - 6-4	0				
6-5	4				
6-6	1				
6-6A	1				
6-6B Blank	1				
6-7 - 6-9	0				
6-10	4				
7-1	7				
7-2	5				
7-2A	1				
7-2B Blank	1				
7-3 - 7-5	0				
7-6	8				

*Zero in this column indicates an original page

TABLE OF CONTENTS

Section		Page
I	INTRODUCTION AND BACKGROUND	1-1
	1-1. Purpose	1-1
	1-2. Scope	1-1
	1-3. Nature and Characteristics of Particulate Contamination	1-1
	1-4. Selection of Environmentally Controlled Facilities	1-1
	1-5. Other Environmental Documents	1-1
	1-6. Relationship to Other Publications	1-3
	1-7. Definitions	1-4
II	RESPONSIBILITIES	2-1
	2-1. AFLC	2-1
	2-2. AFSC	2-2
	2-3. Other Commands	2-2
	2-4. Base Civil Engineering	2-2
	2-5. Environmental Officer	2-2
	2-6. Certification/ Decertification Procedures	2-3
III	TYPES OF ENVIRONMENTALLY CONTROLLED FACILITIES	3-1
	3-1. General	3-1
	3-2. Design and Construction	3-1
	3-3. Environmental Control Requirements	3-1
IV	CONTROLLED AREAS (CLASS 300,000)	4-1
	4-1. General	4-1
	4-2. Operation and Maintenance	4-1
	4-3. Monitoring	4-2
V	CONVENTIONAL CLEAN ROOMS (CLASS 100,000)	5-1
	5-1. General	5-1
	5-2. Design and Construction	5-1
	5-3. Furniture and Fixtures	5-4
	5-4. Clothing Requirements	5-4
	5-5. Operation	5-4
	5-6. Room Maintenance	5-6
	5-7. Monitoring	5-6
VI	LAMINAR FLOW CLEAN ROOMS CROSS FLOW (CLASS 10,000) AND DOWN FLOW (CLASS 1,000)	6-1
	6-1. General	6-1
	6-2. Design and Construction	6-1
	6-3. Clothing Requirements	6-3
	6-4. Operation	6-3
	6-5. Room Maintenance	6-10
	6-6. Monitoring	6-10
VII	LAMINAR FLOW CLEAN WORK STATIONS (CLASS 100 AND CLASS 1,000)	7-1
	7-1. Description	7-1
	7-2. Design	7-1
	7-3. Operation	7-4
	7-4. Maintenance	7-8
	7-5. Monitoring	7-8
VIII	GENERAL CLEAN ROOM PRACTICES	8-1
	8-1. Personnel Requirements	8-1

TABLE OF CONTENTS (Cont)

Section		Page
8-2.	Cleaning Practices	8-4
8-3.	Garments	8-4
IX	MONITORING PRACTICES.	9-1
9-1.	Introduction . . .	9-1
9-2.	Particulate Monitoring - Automatic . . .	9-1
9-3.	Particulate Monitoring - Manual.	9-2
9-4.	Temperature Monitoring . . .	9-2
9-5.	Humidity Monitoring . . .	9-2
9-6.	Pressure/Air Flow Monitoring	9-2
9-7.	Garment Monitoring	9-2
9-8.	Other Procedures	9-3
9-9.	Troubleshooting Clean Rooms . .	9-3
APPENDIX I -	MANUAL METHOD FOR SIZING AND CLEANING AIRBORNE PARTICULATE CONTAMINATION IN CLEAN ROOMS AND OTHER DUST CONTROLLED AREAS	1A-1
II -	MANUAL MONITORING PROCEDURES (COUNTING PARTICULATE CONTAMINANTS IN AND ON CLEAN ROOM GARMENTS.	2A-1

LIST OF ILLUSTRATIONS

Figure		Page
1-1	Characteristics of Particles and Particle Disperoids	1-2
1-2	System Environmental Facility Selection Chart	1-3
5-1	Typical Class 100,000 Clean Room Air Patterns	-2
5-2	Conventional Clean Room Class 100,000 Layout	5-3
5-3	Typical Conventional Clean Room (Class 100,000) Contamination Levels	5-8
6-1	Laminar Cross-Flow Room	6-2
6-2	Laminar Down-Flow Room	6-2
6-3	Twin Cross-Flow Room	6-3
6-4	Down-Flow Curtain Unit (Portable)	6-4
6-5	Tunnel Clean Room (Prefab Module)	6-4
6-6	Emission Pattern Cross-Flow Room	6-6A
6-7	Air Pattern Created In a Cross-Flow Clean Room	6-7
6-8	Cross-Flow Clean Room Layout With Various Bench and Console Operations	6-8
6-9	Emission Pattern Down-Flow Clean Room	6-8
6-10	Down-Flow Clean Room Layout	6-9
7-1	Horizontal Clean Workbench	7-2
7-2	Vertical Clean Workbench	7-3
7-3	Reverse Flow Workbench	7-3
7-4	Down-Flow Clean Booth (Portable)	7-4
7-5	Dual Laminar Flow Devices	7-5
7-6	Air Conditioned Clean Workbench	7-6
1A-1	Clean Room Sampling Plan	1A-2
1A-2	Double Diameter Counting Plan	1A-4
1A-3	Alternate Unit Areas	1A-4
2A-1	Filter Assembly and Adapter	2A-2
2A-2	Typical Counting and Sizing Microscope and Illuminator	2A-2
2A-3	Clean Room Garment Sampling Locations	2A-2

LIST OF TABLES

Table		Page
3-1	Environmental Standards (Guidelines for Clean Room Classes)	3-2

SECTION I

INTRODUCTION AND BACKGROUND

1-1. PURPOSE.

To specify environmental control OPERATING STANDARDS to be used as minimum criteria for work on items requiring environmental control. This Technical Order lists guidelines for selecting environmental facilities and for achieving the operating standards necessary for contamination control during overhaul or repair of critical Air Force system hardware, and lists quality control measures to assure compliance.

1-2. SCOPE.

This Technical Order shall be adhered to for environmental control by all Air Force activities having maintenance and overhaul responsibilities. PMEL facilities and computer facilities are not included. Responsible activities shall make appropriate reference to this document.

1-3. NATURE AND CHARACTERISTICS OF PARTICULATE CONTAMINATION.

Contamination is any substance, material or energy, that adversely affects Air Force system hardware. Contamination is primarily the product of man's activity and secondarily the product of nature. Figure 1-1, "Characteristics of Particles and Particle Dispensoids" is reprinted by permission of Stanford Research Institute. It illustrates typical characteristics of particulate contamination. In view of today's technological developments and manufacturing advances in the area of mechanical, electronic, electro-mechanical, optical, electro-optic, computer, photographic, hydraulic, and pneumatic systems, the need for contamination control is unquestioned. Contamination is the single cause of many Air Force system and component failures daily. Whether it be "dirty" bearings or fungi on micro circuits, the effects are costly in terms of mission failure and tax dollars.

1-4. SELECTION OF ENVIRONMENTALLY CONTROLLED FACILITIES.

In general, system hardware with working tolerances less than one thousandth (.001) of an inch requires environmental control for overhaul. Figure 1-2 illustrates recommended selection criteria to be utilized by system managers and item managers to designate the type of facility to be used for overhaul and repair of the equipment for which he is responsible (see 2-1 b). In selecting the proper facility it should be kept in mind that "Clean" is that contamination level just below that which affects the operation or reliability of the product, and specifying cleanliness above necessary levels is costly.

1-5. OTHER ENVIRONMENTAL DOCUMENTS.

a. AF Manual 88-4, Chapter 5. This manual prescribes criteria for design and construction of Air Force clean room facilities. It specifies the real property standards for meeting the requirements of this technical order.

b. FED-STD-209 refers to the classes of environmental areas and certain air conditioning requirements. This standard establishes a common ground of understanding between Governmental and non-Governmental agencies.

c. MIL-STD-1246 is to be used by all branches of the military services when specifying product cleanliness. It requires non-Governmental agencies involved in repair or design contracts to submit quality control plans for approval. In addition, it

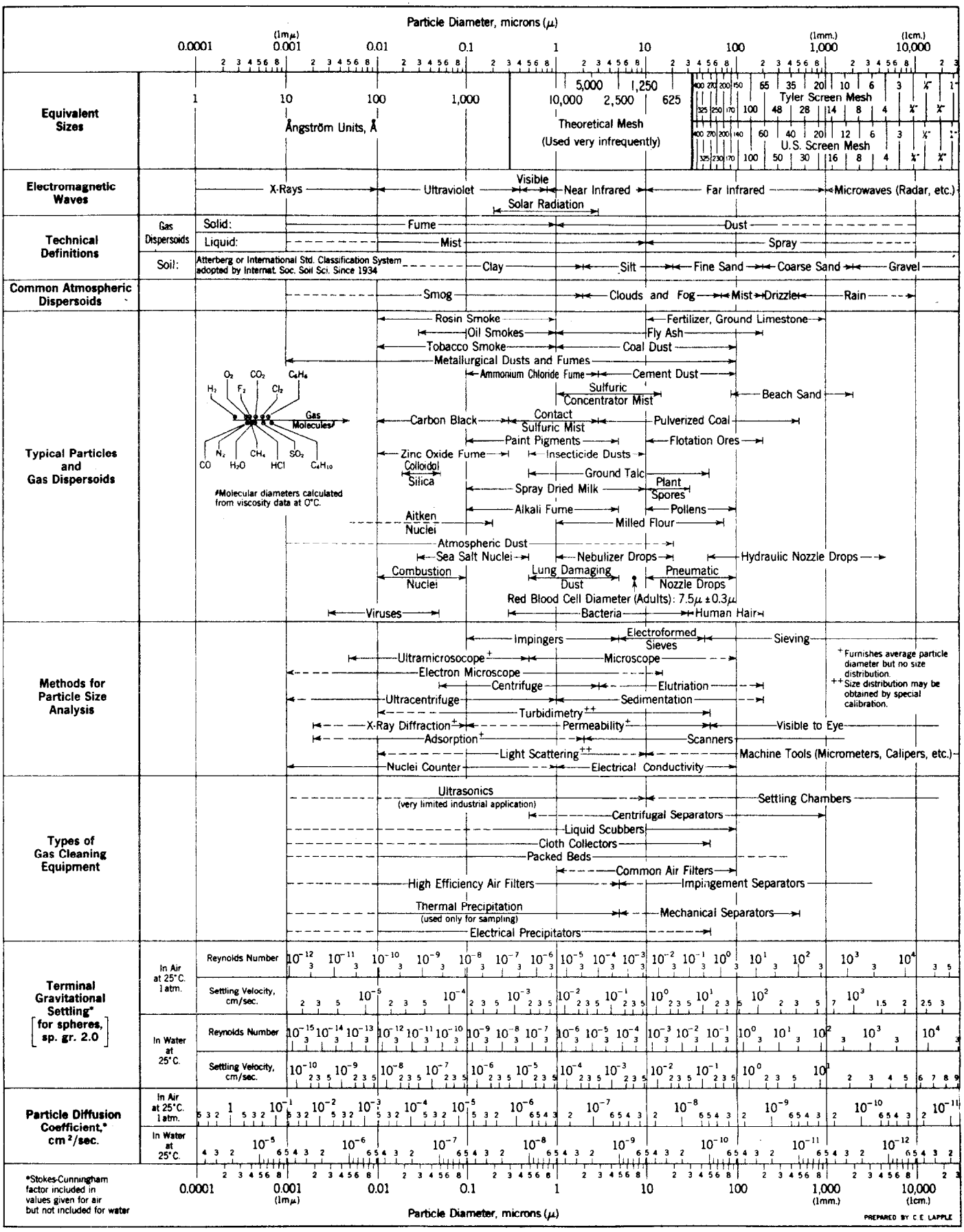

Figure 1-1. Characteristics of Particles and Particle Dispersoids

MINIMUM MECHANICAL SYSTEM TOLERANCES	TYPE OF ENVIRONMENTAL FACILITY RECOMMENDED*
Greater than .001 in.	Air Conditioned Space (not covered by this Technical Order)
.001 In. 25 Microns	Controlled Area (Class 300,000)
.0005 In. 12. 5 Microns	Conventional Clean Room (Class 100,000)
.0001 In. 2.5 Microns	Laminar Flow Clean Room (Class 10,000 or Class 1,000)
.00004 In. 1.0 Microns	Laminar Flow Device (Class 1,000 or Class 100)
.00001 In. .3 Microns	Laminar Flow Device (Class 1,000 or Class 100)

*The types of environmentally controlled facilities are described in Section III.

CHART REFERENCE DATA

1 Meter = 39.37 Inches	.3 Micron = .000,011,81 Inches
1 = 1 Inch	.5 Micron = .000,019,68 Inches
.1 = 1/10 (One tenth inch)	1 Micron = .000,039,37 Inches
.01 = 1/100 (One hundredth inch)	2 Micron = .000,078,74 Inches
.001 = 1/1000 (One thousandth inch)	5 Micron = .000,196,85 Inches
.0001 = 1/10,000 (One ten-thousandth inch)	10 Micron = .000,393,70 Inches
.000,01 = 1/1000,000 (One hundred-thousandth inch)	25 Micron = .000,984,30 Inches
.000,001 = 1/1,000,000 (One millionth inch)	50 Micron = .001,968,50 Inches

Figure 1-2. System Environmental Facility Selection Chart

stipulates when designing an end item, the contractor shall establish environmental standards, which shall also be approved by the contracting organization. This document should be used when preparing contracts on end item repair or design.

1-6. RELATIONSHIP TO OTHER PUBLICATIONS.

a. This publication takes precedence over environmental operating standards set forth in existing Air Force technical

publications which apply to clean rooms (except controlled areas) and clean work stations.

NOTE

Particular environmental controls required for specific components may be necessary in addition to the operational standards specified herein. If this is the case, these particular controls will be maintained for the components in question.

1-7. DEFINITIONS.

a. Air Conditioning - A general term to describe the control and conditioning of the air in an environmentally controlled facility to maintain specified standards of temperature and humidity.

b. Air Lock - An area between the entrance to the clean room and the entry from an outside area. The air lock receives the same clean, filtered air as the clean room, and is designed to prevent the contaminated air in the outside area from flowing into the clean room.

c. Clean Room - An enclosed area employing control over the particulate matter in air with temperature, humidity, and pressure control as required. Clean rooms must not exceed the particle count specified in table 3-1 for a conventional clean room.

d. Clean Room Garments - Any part or complete uniform of special clothing that must be worn in environmentally controlled areas as specified in this Technical Order. The garments may include overalls, boot type shoe covers, clean shirts, caps or hoods, and other garments necessary to satisfy local requirements.

e. Clean Work Station - A workbench or similar working enclosure characterized by having its own filtered air supply.

f. Contamination - The presence of any substance, material or energy, that is unwanted and adversely affects the operation of system hardware.

g. Contamination Control - The process of eliminating or minimizing contamination in the work area by using environmentally controlled facilities. (See Environmental Control.)

h. Controlled Area - An air conditioned work space or room in which the particle concentration is lower than normal air conditioned spaces. A controlled area is not to be classified as a clean room, but some special filtration is required as specified in this Technical Order. Such an area is required for overhaul of items which do not require the strict environmental controls of a clean room, but which should be segregated from excessive dirt generation operation.

i. Environmental Control - A collective term for the positive control of the atmospheric conditions within a designated area whereby the particulate contamination temperature, pressure, and humidity can be established and measured.

j. HEPA (High Efficiency Particulate Air) Filter - A throw-away extended media dry-type filter in a rigid frame having a minimum particle collection efficiency of 99.97% for 0.3 micron particles. Reference American Association CS-IT, “Standards for HEPA Filters”.

k. Laminar Flow - An airflow pattern in which the entire body of air within a confined area moves with uniform velocity along parallel lines. The flow is essentially unidirectional and is non-turbulent.

l. Laminar Flow Clean Room - A clean room in which the laminar airflow characteristics predominate throughout the entire room, with a minimum of eddies.

m. Laminar Flow Clean Work Station - A clean work station in which the laminar

airflow characteristics predominate throughout the entire airspace, with a minimum of eddies.

n. Limited Linting - Applies to towels, garments, wiping cloth, or other fabric materials which have been tested and proven to exhibit limited shedding of lint particles.

o. Micron - A unit of measurement equal to one-millionth of a meter or approximately 0.00003937 inch. (25 microns are approximately 0.001 inch.)

p. Particle - A very small discrete mass of solid or liquid matter. Particles are usually measured in microns.

q. Particle Concentration or Particle Count - Concentration expressed in terms of the number of particles per unit volume of air or other gas.

r. Particle Size - An expression for the size of liquid or solid particles expressed as the apparent maximum linear dimension or diameter of the particle.

s. Particulate Matter - A general term applied to miniature particles of material suspended in gases or liquids.

t. System Hardware - Any item or component that requires environmental control for disassembly, repair, cleaning, and reassembly. They are normally components that make up a particular weapon system.

SECTION II

RESPONSIBILITIES

2-1. AFLC.

a. The Space and Special Systems Program Management Directorate, Warner Robins Air Logistics Center.

(1) Be the Office of Primary Responsibility (OPR) for this Technical Order (in accordance with AFLC Regulation 66-21).

(2) Be the Office of Interest for Federal Standard 209, "Clean Room and Work Station Requirements, Controlled Environment," and MIL-STD-1246, "Product Cleanliness Levels and Contamination Control Program."

(3) Provide all Air Force activities with technical assistance, upon request, to resolve problems regarding clean room operation and equipment.

(4) Review and verify environmental requirements when requested by TRC.

(5) Provide consulting assistance for selection of equipment necessary for the operation of clean rooms.

(6) Determine requirement for, convene, and provide the chairmanship of periodic clean room operation conferences for all Air Force activities. The purpose of conferences will be the discussion and resolution of problems relative to clean room functions, clean room equipment and clean room product requirements.

(7) Establish and maintain a team of clean room experts within AFLC consisting of a clean room officer for each ALC or Air Force Station (where applicable) for the purpose of certifying and monitoring all environmentally controlled areas as defined by this Technical Order.

b. Systems Manager/Inventory Managers (SM/IM), in conjunction with AF support engineering groups, shall furnish to appropriate clean room management the following specific environmental requirements for overhaul of equipment:*

(1) Airborne dust level requirements. (Class 100, 1,000, 10,000, 100,000, or Controlled Area.)

(2) Temperature requirements.

(3) Humidity requirements.

(4) Decertification procedure requirements, if required, see 2-6d.

(5) Other special requirements (if any).

c. The organization performing maintenance in Contamination Controlled Facilities at the TRC, Air Logistics Center or other

*See paragraph 1-4 and figure 1-2 for guidelines of clean room class selection. If the SM/IM is uncertain of the specific environmental requirements, then he shall consult the Air Force engineering group responsible for the equipment, the manufacturer, or other technically qualified people to determine the above. When determined, the SM/IM shall take action to incorporate the information in the particular item's technical order. Air Force activity shall implement and enforce the operational standards and practices in this technical order and shall also:

(1) Submit environmental control requirements to the Base Civil Engineers (BCES) to program for the design of new or modification of existing clean rooms and/or controlled areas. Review BCE proposals for compliance with Fed-Std-209 and AFM 88-4 Chapter 5, before implementation.

(2) Initiate necessary action through established authorization and supply channels to obtain required clean room equipment in sufficient time to support projected repair schedules and allied modifications or construction programs.

(3) Request technical assistance as required from the Space and Special Systems Program Management Directorate, Warner Robins Air Logistics Center regarding the design and operation of clean rooms.

(4) Deleted

(5) Develop a procedure or take the necessary action for Production Management, or an equivalent organization, upon receipt of any item for overhaul/repair in an environmentally controlled area, and whose accompanying technical order does not reflect the specific environmental criteria required by paragraph 2-1b of this technical order, to intitiate an AFTO Form 22 against that technical order requesting that it be revised to specify the specific environmental criteria.

(6) Prepare a decertification procedure as specified in paragraph 2-6d to determine what action is necessary in the event a facility is decertified by the clean room officer.

(7) Maintenance Engineering support groups shall review/coordinate efforts with Base Civil Engineers to assure facilities comply with Fed-Std-209 and AFM 88-4. Chapter 5.

(8) Develop procedures for periodically reviewing both existing and changing work processes and equipment to assure compliance with this Technical Order. Maintenance Engineering support groups shall review work processes and equipment, and then coordinate efforts with the clean room officer for acceptability. All work processes and equipment that do not comply shall not be allowed in the environmentally controlled areas. Reviews shall be given at least once annually, and engineering groups shall maintain records in accordance with standard Air Force practices.

2-2. AFSC.

a. Weapon System Program Directors shall insure that system development includes identification of components requiring environmentally controlled conditions during maintenance operations. These components shall be identified and documented in the appropriate repair technical order and shall specifically designate the class environment needed as outlined in paragraph 1-4 of this Technical Order. All of these requirements will be satisfied prior to transition to AFLC.

2-3. OTHER COMMANDS.

a. Other Air Force commands that operate/maintain facilities as described in this technical order shall comply with the provisions presented. Each base or activity shall:

(1) Appoint a clean room officer to meet the requirements of paragraph 2-5. His responsibilities shall be implemented by local regulations supplementing the peculiar operation.

(2) Develop a procedure or similar action to initiate, upon receipt of any item for overhaul/repair in an environmentally controlled area and whose accompanying technical order does not reflect the specific environmental criteria required by paragraph 2-lb of this Technical Order, an AFTO Form 22 against that technical order requesting that it be revised to specify the specific environmental criteria.

(3) Prepare a decertification procedure as specified in paragraph 2-6d to determine what action is necessary in the event a facility is decertified by the clean room officer.

2-4. BASE CIVIL ENGINEERING.

a. Base Civil Engineering shall:

(1) Initiate, develop and coordinate with the Production/Maintenance Organization and the Clean Room Officer, a preventative maintenance program for all environmentally controlled facilities as described in Section III of this Technical Order.

(2) Advise and coordinate with Production/Maintenance Organization and the Clean Room Officer, all efforts concerning environmentally controlled facilities to assure proposals comply with Fed-Std-209 and AFM 88-4, Chapter 5.

(3) Advise the clean room officer when new environmental facilities are ready for inspection and certification as specified in paragraph 2-6. Certification of the new facilities must be made prior to start-up.

(4) Advise the clean room officer following HEPA filter changes and repair and/or rework on filter banks when they are accomplished on existing facilities. This is required to assure that the room is decertified, tested and recertified prior to the commencement of production center work.

(5) Perform periodic inspections and maintain records of all air handling systems to determine if equipment and HEPA filters are functioning properly. The inspection shall be made at least once annually.

2-5. CLEAN ROOM OFFICER.

Each Air Force Base or Activity that maintains and operates environmentally controlled area(s), as-defined herein and by Fed-Std-209, shall appoint a clean room officer to meet the following requirements:

(1) The clean room officer at each AFMC Air Logistics Center and AGMC (Newark AFB, OH) shall be appointed from the Physical Sciences Laboratory, and shall have a minimum bachelor's degree in engineering or a related physical science. He shall also be a member of the team of clean room experts as described in paragraph 2-1a(7).

(2) The clean room officer at all other Air Force activities should have a minimum bachelor's degree in engineering or a related physical science, but may be a qualified technician trained in contamination control. Determination of qualifications and appointment shall be made at base level by management responsible for the work being done.

b. The responsibilities of the clean room officer shall include the following:

(1) Perform unannounced diagnostic investigations of all classes of controlled environments and clean work stations, as defined and covered by this Technical Order, to determine if they meet established standards. The investigation shall be

performed at least once each calendar month* for controlled areas and all classes of clean rooms, and at least once every six months for clean work stations. Certification or decertification shall be made on the basis of this investigation and in accordance with paragraph 2-6. Investigations shall also be made following HEPA filter changes and repair and/or rework on filter banks to ensure that requirements are met. Records shall be maintained of data taken during the investigations.

NOTE

*If automatic monitoring and recording of particle count, temperature and humidity is used, the investigation can be performed once every six months.

(2) Provide follow-up on all corrective recommendations for the purpose of determining their fulfillments and results.

(3) Review repair and cleaning procedures/ processes upon request, and advise Production Management and/or the SM/IM of any deficiencies noted.

(4) Maintain contact with the T.O. 00-25-203 Manager at Warner Robins ALC/ LKJTC for the purpose of obtaining current clean room information and provide information as required.

(5) Provide liaison between the Civil Engineer representative and Director of Maintenance representative on all matters pertaining to clean room design and maintenance, including new facilities.

(6) Coordinate for the purpose of advising management on matters concerning acceptance or rejection of all changes in clean room layout,

2-6. CERTIFICATION/DECERTIFICATION PROCEDURES.

a. Certification/decertification shall be determined by the clean room officer and shall be based on his diagnostic investigation as specified in 2-5b(1).

b. The local management, as designated in 2-1c(6) and 2-3a(3), shall prepare the certification/ decertification procedures for the work assigned to them. Because of the many types of hardware and the various types of work being done in Air Force environmentally controlled areas, a specific certification/decertification procedure cannot be prepared to apply to all activities. The procedures can best be prepared by those knowledgeable of the equipment and facilities and those responsible for the work being done.

c. Certification procedures shall include the following:

(1) Methods of maintaining records of airborne dust counts, temperature, humidity, and other data as required for each environmentally controlled area. These records shall be maintained by the clean room officer.

(2) A chart showing room identification, the class of airborne contamination, date of certification, and signature of environmental officer. The chart may be kept by the clean room supervisor or displayed at the entrance to the clean room.

(3) A chart or decal to be affixed to each clean work station or laminar flow device. The chart or decal shall show the class of airborne contamination, expiration date of certification, air velocity, and signature of clean room office

d. Decertification procedures shall include the following:

(1) Conditions and procedure for decertification. The clean room officer shall verbally advise the clean room supervisor immediately upon completion of the diagnostic investigation if any of the specified environmental control conditions are not met. Unless the cause of the deficiency is temporary as noted*, and cannot reasonably be expected to be corrected within 24 hours, the facility shall be decertified. Laminar flow clean work stations shall be decertified immediately if the airborne contamination is too high or air velocity is too low.

*It should be recognized that airborne contamination levels, temperature, and humidity will peak during extremely hot or cold weather, rainy days, or during shift changes or similar breaks. The clean room officer shall use judgement based on the requirements of the work in process, past records, and experience in deciding to decertify a facility.

(2) Written notification. The clean room officer shall give written notice of decertification to the appropriate division level of management within 24 hours after completion of the diagnostic investigation if any of the specified environmental control conditions are not met and the condition is not temporary. Upon decertification all work in the area must stop or contingency plans must be put into effect.

(3) Disposition of work in process if a temporary environmental deficiency is noted or if a facility is decertified. Disposition will depend on the end item requirements and may include complete or partial rework, work stoppage without rework, special inspections, or use of a contingency plan. Disposition should be determined in advance

of possible decertification so that prompt action can be taken.

(4) Contingency plan, if used. If the end item is a critical item or has a critical schedule and if work is to continue, a contingency plan must be used. A contingency plan may include transfer of the work to another adequate clean area, transfer of work to an area that is cleaner than normally required (such as to a clean work station), use of alternate work procedures requiring more frequent cleaning and/or closer inspection than normally required for quality control, or other special procedures depending on the end item requirements. Contingency plans should be prepared in advance so that prompt action can be taken if an environmentally controlled facility is decertified.

SECTION III

TYPES OF ENVIRONMENTALLY CONTROLLED FACILITIES

3-1. GENERAL.

a. There are three basic types of permanent environmentally controlled facilities that are utilized by the Air Force to achieve contamination control while working on systems hardware. The permanent facilities (real property) are under the cognizance of Civil Engineering. They are, in order of cleanness;

(1) Controlled areas (Class 300,000) - Section IV.

(2) Conventional Clean Rooms (Class 100,000) - Section V.

(3) Laminar Flow Rooms - Section VI.

(a) Cross Flow (Class 10,000).

(b) Down Flow (Class 1,000).

b. The fourth type of environmentally controlled facilities consists of the various types of portable and semi-portable laminar flow devices. The laminar flow devices are equipment items and are managed by the Inventory Manager for FSC 3694 at Warner Robins Air Logistics Center.

Laminar Flow Devices Section VII

(1) Class 1,000

(2) Class 100

3-2. DESIGN AND CONSTRUCTION.

Design and construction criteria for each type of environmentally controlled facility is contained in AF Manual 88-4, Chapter 5, "Criteria for Air Force Clean Facility Design and Constructions." The construction of new conventional type (Class 100,000) clean rooms has been discontinued by the Air Force. For the same initial cost, contamination control can better be achieved by constructing a laminar flow room. The laminar flow clean rooms have proven their worth in both economy of operation and positive environmental control, and every effort should be made toward this type of design. Where laminar flow clean rooms are not practical, consideration should be given to using laminar flow devices within a controlled area (Class 300,000).

3-3. ENVIRONMENTAL CONTROL REQUIREMENTS.

Table 3-1 specifies the minimum standards required for each type of environmentally controlled facility. All four types are illustrated.

Table 3-1. Environmental Standards (Guidelines for Clean Room Classes)

	CONTROLLED AREA CLASS 300,000 *See Note 1	CONVENTIONAL CLEAN ROOM CLASS 100,000	LAMINAR CROSS FLOW ROOM CLASS 10,000	LAMINAR DOWN FLOW ROOM CLASS 1,000	LAMINAR FLOW WORK STATIONS CLASS 100
PARTICLE COUNT (0.5 Micron and larger per cubic ft. of air - Max.)	300,000 (0.5 Micron) or 700 (5.0 Micron - Manual)	100,000	10,000	1,000	100 or 1,000 as specified
PARTICLE MONITORING Equipment Requirements	Automatic Counters for 0.5 micron or manual method for 5.0 micron (Section IX). Environmental Officer shall check (para 2-5b)	Automatic Counters (Section IX) Environmental Officer shall check (para 2-5b)	Same as Conventional Clean Room	Same as Conventional Clean Room	Same as Conventional Clean Room
AIR CONDITIONING (Systems will be run 24 hours per day except as Provided in Paragraph 4-2.b.1 (1).)	Temperature: 80°F Maximum Humidity: 50% or less	Temperature: 72°F ±5° Humidity: 30% min, 50% max	Same as Conventional Clean Room	Same as Conventional Clean Room	Controlled by the room in which device is located
AIR FILTRATION Entire clean area	Stage No. 1: Rough Filter 50%-60% (NBS) (Cottrell Dust) Stage No. 2: Medium efficiency filter 80%-85% (NBS) (atmospheric dust)	Stage No. 1: Rough Filter 50%-60% (NBS) (Cottrell Dust) Stage No. 2: Medium efficiency filter 80%-85% (NBS) (atmospheric dust) Stage No. 3: HEPA Filter MIL-F-51068	Same as Conventional Clean Room	Same as Conventional Clean Room	HEPA Filters MIL-F-51068 Self Contained
PRESSURE DIFFERENTIAL (Highest pressure within cleanest area and progress down in relation to cleanliness requirements)	Positive pressure to eliminate or minimize the infiltration of contaminated outside air.	Positive pressure (minimum of .05 inches of water) between the clean room and the outside atmosphere.	Positive pressure (minimum of .05 inches of water) between the clean room and the outside atmosphere.	Positive pressure (minimum of .05 inches of water) between the clean room and the outside atmosphere.	Not applicable

Table 3-1. Environmental Standards (Guidelines for Clean Room Classes)

	CONTROLLED AREA CLASS 300,000 *See Note 1	CONVENTIONAL CLEAN ROOM CLASS 100,000	LAMINAR CROSS FLOW ROOM CLASS 10,000	LAMINAR DOWN FLOW ROOM CLASS 1,000	LAMINAR FLOW WORK STATIONS CLASS 100
AIR FLOW Room air changes per hour or velocity	Minimum of 10 air changes per hour	15-20 air changes per hour	Air velocity 100 ft. per minute at filter face and shall not vary more than 20 fpm throughout entire facility. Velocity will not drop below 75 fpm at any work station or operation being performed (isolated deviations, if warranted, may be approved by the clean room officer).	Air velocity 50 ft. per minute (minimum) over entire facility.	An average velocity shall be between 72 and 200 ft. per minute at any point. No single reading shall be less than 72 ft. per minute at any point.

Table 3-1. Environmental Standards (Guidelines for Clean Room Classes) (Cont)

	CONTROLLED AREA CLASS 300,000 *See Note 1	CONVENTIONAL CLEAN ROOM CLASS 100,000	LAMINAR CROSS FLOW ROOM CLASS 10,000	LAMINAR DOWN FLOW ROOM CLASS 1,000	LAMINAR FLOW WORK STATIONS CLASS 100
ENVIRONMENTAL CONTROLS Temperature Humidity	Temperature and humidity control located within the facility and no manual control within the room.	Temperature and humidity control located outside room and no manual control within the room.	Same as Conventional Clean Room	Same as Conventional Clean Room	Controlled by the room in which the device is located.
ENVIRONMENTAL MONITORING Temperature Humidity Pressure Air Velocity	Clean room Officer shall check (para 2-5b and Section IX)	Clean room Officer shall check (para 2-5b and Section IX)	Clean room Officer shall check (para 2-5b and Section IX)	Clean room Officer shall check (para 2-5b and Section IX)	Clean room Officer shall check (para 2-5b and Section IX)
VACUUM CLEANING SYSTEM	Central vacuum system or portable vacuum cleaner with filtered air output. Vacuum will be furnished at each bench for parts cleaning.	Central vacuum system will be furnished. Vacuum will be supplied to air locks, each workbench, and by each pass through window.	Same as Conventional Clean Room	Same as Conventional Clean Room	Utilize an external vacuum system as required.
AIR LOCKS	Desirable	Air locks are required at all entrances and exits, both for personnel and equipment. One air lock will be large enough to clean end items within the confines of the air lock before entry into the clean room.	Air locks are required and must be made available at the downstream side of the room for personnel and equipment being brought into the clean room.	Not required	Not required
COMMUNICATIONS SYSTEM	A two-way communications system will be installed between the controlled area and outside area at each pass through windows.	A central communications system will be installed for addressing personnel within the clean room. A two-way system will also be installed at each pass-through window.	Same as Conventional Clean Room	Same as Conventional Clean Room	Not applicable

Table 3-1. Environmental Standards (Guidelines for Clean Room Classes) (Cont)

	CONTROLLED AREA CLASS 300,000 *See Note 1	CONVENTIONAL CLEAN ROOM CLASS 100,000	LAMINAR CROSS FLOW ROOM CLASS 10,000	LAMINAR DOWN FLOW ROOM CLASS 1,000	LAMINAR FLOW WORK STATIONS CLASS 100
GARMENT REQUIREMENTS	Determine locally.	Complete clean room uniform consisting of: a. Coveralls b. Cap/hood/snood c. Clean room shoes/covers d. Additional clothing as required.	Partial clean room uniform consisting of: a. Smock/frock b. Cap/hood/snood c. Additional clothing as required.	Partial clean room uniform consisting of: a. Smock/frock b. Cap/hood/snood c. Additional clothing as required.	Special considerations.
SHOE CLEANERS	Walk-off mats at all entrances. Vacuum Shoe cleaners (Brushes) are a local option.	Vacuum shoe cleaners (brushes) required at all entrances to clean room; and tacky mats just before entering clean room.	Same as Conventional Clean Room	Same as Conventional Clean Room	Not applicable
CONTAMINATING OPERATIONS Soldering Grinding Cutting Unsealing Spraying Paper work	Exhaust as required to maintain room integrity.	Exhaust as required to maintain room integrity or use reverse flow clean work station.	Confine to the exhaust end of the room.	Confine to an isolated portion of the room. Use reverse flow clean work stations.	Not applicable
DESIGN AND CONSTRUCTION Walls Ceiling Floor Electric Power Lighting Noise and Vibration Static Electricity	Design considerations, AFM 88-4, Chapter 5	Design considerations, AFM 88-4, Chapter 5	Design considerations, AFM 88-4, Chapter 5	Design considerations, AFM 88-4, Chapter 5	Special considerations.

*NOTE 1: For Controlled Areas only - When temperature, humidity and particulate requirements specified herein conflict with that specified in an end item overhaul technical order, then the item overhaul technical order shall take precedence. See paragraph 4-2b.

SECTION IV

CONTROLLED AREAS (CLASS 300,000)

4-1. GENERAL.

a. A controlled area is intended to provide a semi-clean atmosphere somewhat better than ambient conditions of an air conditioned space. Equipment and hardware that require some degree of contamination control, but do not require a high degree of temperature and humidity controls, are normally worked in this type of facility. Most existing shops can be converted to controlled areas with minor modifications when compared to the extensive modifications that would be required to establish the various classes of clean rooms as further defined in this technical order.

b. Compliance with the following sections is required:

Section II	RESPONSIBILITIES
Section VII	LAMINAR FLOW CLEAN WORK STATIONS (as applicable)
Section VIII	GENERAL PRACTICES WITHIN ENVIRONMENTALLY CONTROLLED FACILITIES.

c. Facility design. See Section III for reference to Air Force design and construction manuals.

4-2. OPERATION AND MAINTENANCE.

a. The operation of a controlled area is not as critical as other types of clean facilities. Complete clean room uniforms or special clothing are usually not required unless needed to maintain the integrity of the room. Special clothing may also be required for work on special items, but in most cases, a frock/smock and cap will be sufficient. Exact clothing requirements will be determined by local management and the environmental officer. Special entering and exiting procedures are not required, but good housekeeping practices are essential. Frequent cleaning is required to prevent dirt accumulation that could cause concentrations of particulate contamination to exceed the particle count specified in table 3-1. Utilities, fixtures, or any other equipment to be used in the controlled area should be selected with cleaning in mind. In maintaining the room, the floor, walls, and ceiling shall be painted or covered with materials that can withstand constant cleaning.

b. Specific environmental conditions, particle count, and other requirements for controlled areas are specified in table 3-1. Comments on some of the requirements are as follows:

(1) Air Conditioning - Air Conditioning will be standard commercial design except that the filtration system shall be rated 80-85% efficient (NBS) for 1.0 micron and larger particles. The air handling unit will be designed to provide at least 10 air changes per hour. Where feasible, thought should be given to installing equipment with sufficient capacity (static pressure and CFM) whereby HEPA filters could be installed if required. Air handling equipment will run continuously. However, in the interest of energy conservation, air handling equipment may be routinely turned off during periods when rooms served by that equipment are not being used provided that the following conditions have been satisfied.

a. Precautions have been taken to remove and/or protect the items or materials being worked in the rooms to be shut down.

b. Permanently installed equipment has been prepaired so as not to be adversely affected or damaged by the loss of the controlled environment.

c. Before operations can be resumed in the shut down cleaned rooms and controlled areas, the air handling system will have to have been functioning a sufficient length of time for the particle count to be below the specified limits and the temperature and humidity to have stabilized within preserved limits.

(2) Particle Count Tolerance - The operation tolerance for Controlled Areas Shall be no more than 300,000 particles 0.5 micron and larger per cubic foot of air or no more than 1000 particles 5.0 microns and larger per cubic foot of air when measured with automatic particle counters. The tolerance shall be no more than 700 particles 5.0 microns and larger per cubic foot of air when measured by the manual method.

The manual method shall not be used if an automatic particle counter is available.

(3) Pressure differential - A sufficient pressure differential will be maintained at all times to prevent contaminated air from flowing into the controlled area. An air lock is desirable, but is not required if room integrity can be maintained without it.

(4) Environmental Conditions - In general, normal shop areas will not exceed 80° Fahrenheit and the relative humidity will be 50% or less, but actually, controlled areas may be very flexible in certain cases. If laminar flow clean work stations are not used in the area, and if the environmental conditions specified in table 3-1 conflict with that specified in an end item overhaul technical order, then the end item technical order shall take precedence. If a controlled area incorporates laminar flow clean work stations (class 100 or 1,000) for the purpose of critical work, then the temperature and humidity shall meet the requirements of a class 100,000 clean room as specified in table 3-1.

4-3. MONITORING.

The clean room officer shall monitor at least once a month all controlled areas for the particle count and environmental conditions specified in table 3-1. Certification/decertification shall be in accordance with paragraph 2-6. If laminar flow clean work stations are incorporated as stated above, then the temperature and humidity of the controlled area shall be monitored and certified or decertified as meeting the same requirements as a class 100,000 clean room. Monitoring procedures are outlined in Section IX.

SECTION V

CONVENTIONAL CLEAN ROOM (CLASS 100,000)

5-1. GENERAL.

a. The majority of the existing clean rooms in the Air Force are conventional clean rooms. These rooms require special construction materials, air conditioning, and filtration systems. As shown in figure 5-1, turbulent air flow conditions are inherent in conventional clean rooms, and personnel are required to wear complete coverage uniforms in order to isolate human generated contamination from critical systems. Air locks are required at entrances and exits, and positive internal pressure is required to prevent contaminated air from flowing into the room. Conventional clean rooms are utilized to repair sensitive electromechanical, electronic, and optical systems such as gyros, velocity meters, and reconnaissance cameras, etc., where the items of hardware are susceptible to failure by particulate contaminants, humidity, or temperature, any of which exceed those specified in table 3-1.

b. Compliance with the following sections is required:

Section II	RESPONSIBILITIES
Section VII	LAMINAR FLOW CLEAN WORK STATIONS (as applicable)
Section VIII	GENERALCLEANROOM PRACTICES

5-2. DESIGN AND CONSTRUCTIONS.

a. Facility Design. See Section III for reference to Air Force design and construction manuals.

b. Layout. A sample layout of a conventional clean room is presented in figure 5-2. The illustration is used here solely to facilitate the presentation of procedures and not to define the exact shape of clean rooms. The following should be considered in the layout:

(1) Change/Locker Room. Change/Locker rooms provide employees or visitors with a place to prepare themselves for entry into the clean room. A sample change/locker room is shown as a part of figure 5-2. These rooms are connected to the clean room by air locks. Change rooms shall receive clean filtered air equal to that supplied to the clean room. In most cases they are supplied by the same air conditioning system. The locker room need not be a separate room but only a place where overcoats, inclement weather garments, etc., can be stored prior to donning clean room garments. The locker room is considered an uncontrolled area. An effective shoe cleaner will be provided at the entrance to the change/locker room, and an effective sole cleaner, tacky or sticky mat will be located between the change room and the entrance to the clean room.

(2) Wash Rooms. Wash rooms, including toilet facilities, are normally provided. The washing facilities incorporate lavatories, liquid soap dispensers, and warm air hand driers. Air hand driers may be a source of contamination and those used should be specifically designed to produce a warm but relatively particle free air stream. A vacuum drier may be used as a substitute.

(3) Equipment Air Locks. An equipment air lock is provided to accommodate most equipment which must be moved in or out of the clean room. The air lock also serves as an area where final cleaning operations can be performed on

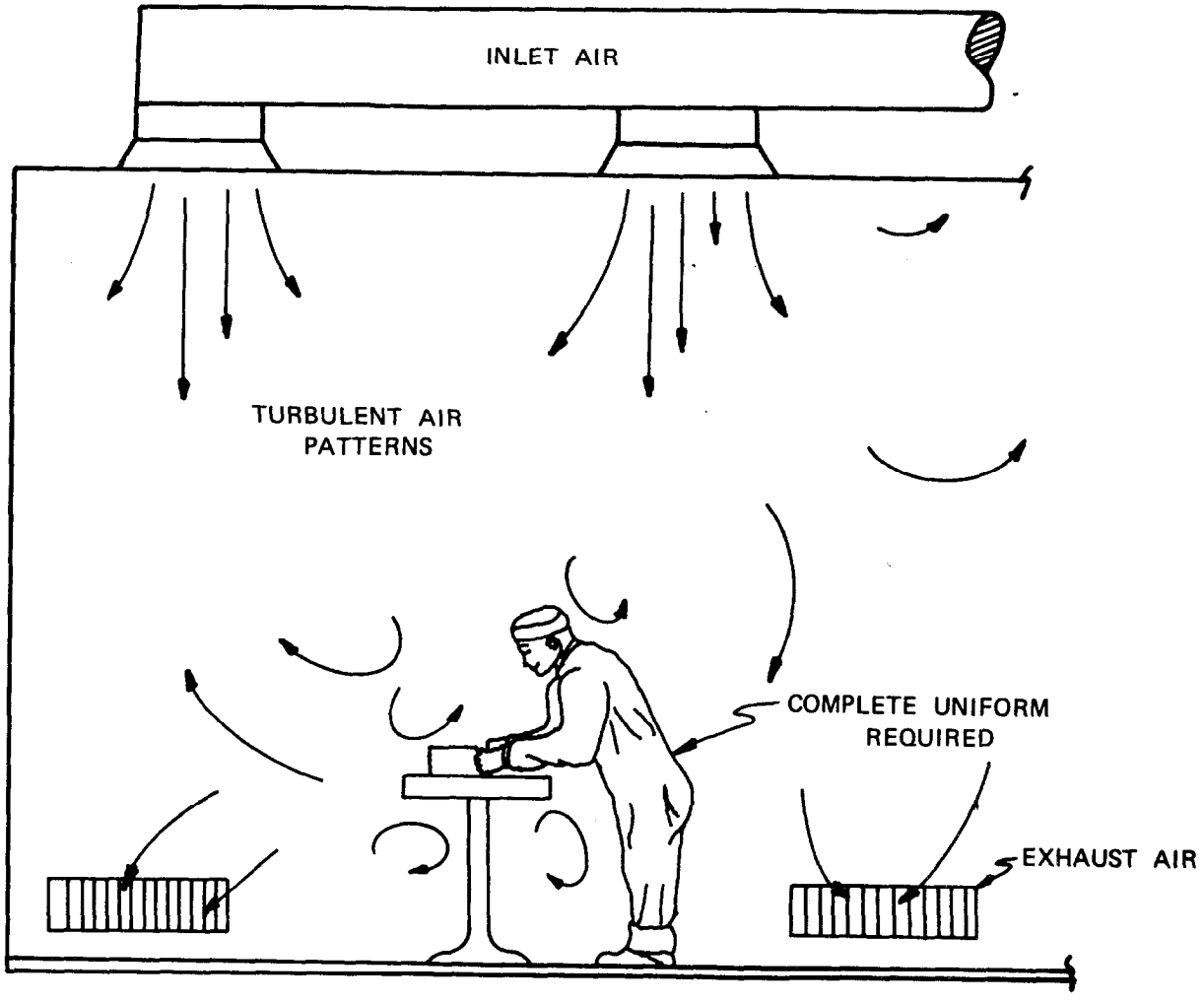

Figure 5-1. Typical Class 100,000, Clean Room Air Patterns

equipment prior to entry into the clean room. This air lock is not used during normal operation of the clean room. For large infrequently moved items, temporary air locks may be constructed of polyethylene or similar plastic sheet.

(4) Pass Through Windows. Pass through windows or pass through boxes are small air locks through which hand tools or small parts can be transferred in or out of the clean room without carrying them through the larger air locks. They are for use during operating hours and will help minimize personnel traffic in and out of the clean room, and thus minimize the spread of contamination.

(5) Clean Room. Clean rooms are restricted areas with limited access in which critical work is performed. Uniforms are required for all individuals entering. The rooms are for the most part self-contained in that they incorporate all necessary power wiring, plumbing, vacuum systems, workbenches, vapor hoods, cleaning chambers, test equipment, furniture, part delivery systems, lighting and fixtures.

(6) Office Space. Office space is provided as an uncontrolled area outside the clean room for routine paperwork. The supervisor's office is generally in the space, and windows are used to review the clean room.

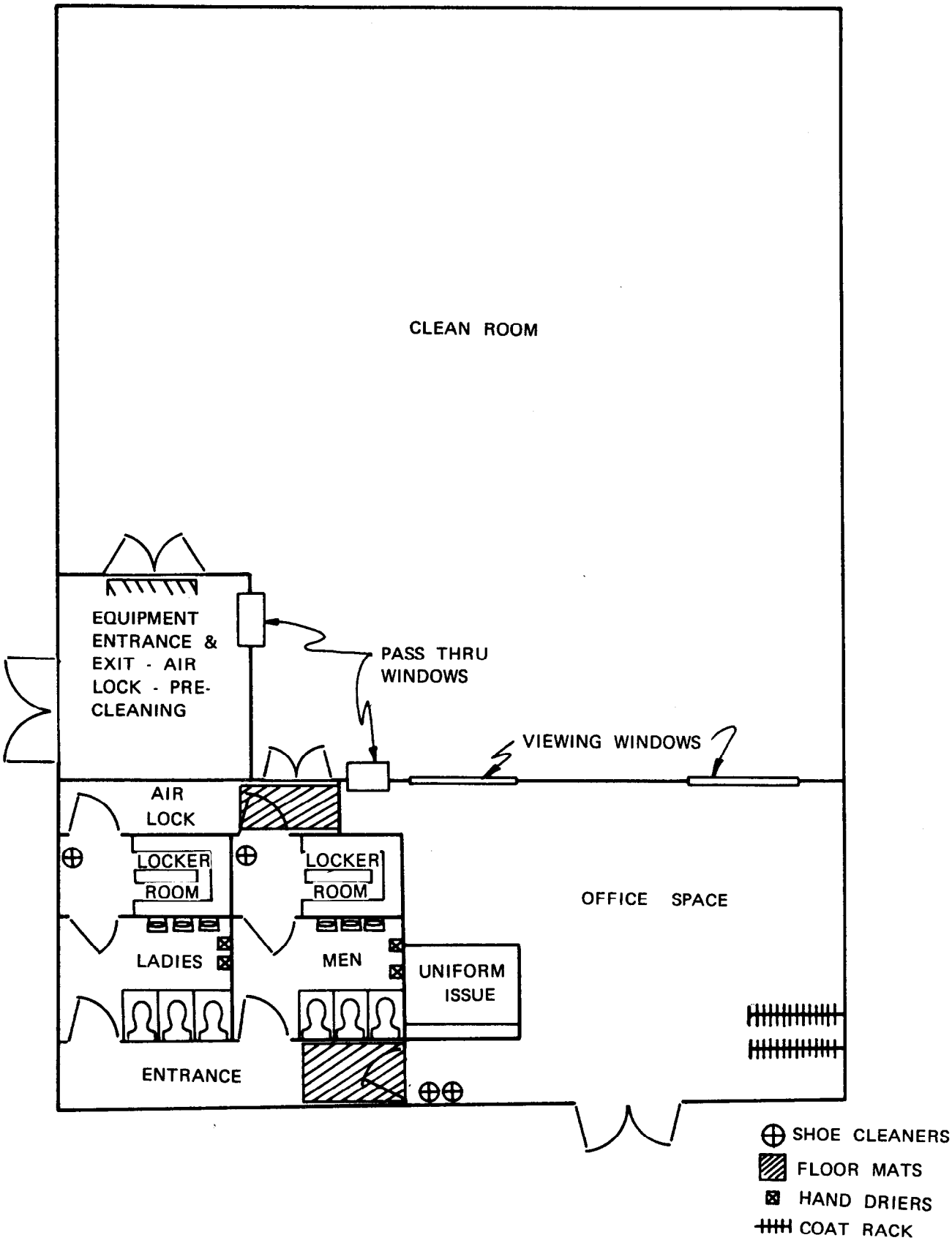

Figure 5-2. Conventional Clean Room, Class 100,000 Layout

5-3. FURNITURE AND FIXTURES.

a. Furniture and fixtures for clean room use must be selected with care. Materials will be chosen to resist the generation of particles by chipping, flaking, oxidizing, or other deterioration. Normal paint will not be used in areas which are subject to repeated contact with personnel or other objects in the clean room (such as workbench legs). Should such surfaces require painting, an epoxy, polyester or similar surface coating will be used. (Note: Instructions for the preparation and application of these coatings must be followed exactly in order to obtain desired results. Surfaces must be prepared properly.) Contemplated usage will dictate the choice of materials for clean room furniture and fixtures. Items which can expect to be bumped, hocked, abraded, etc., by personnel, will possess a tough, resilient, low particle generating surface such as stainless steel, a formica type material, or material of equivalent surface qualities. If not subject to such treatment, the items may be of conventional design. Sound engineering economy principles should prevail. Commercial food handling or restaurant type equipment is usually acceptable for clean room use.

b. Benches or tables selected for use in a clean room may have varied shapes and sizes depending on the workload. These units will have large radius bullnoses on all edges which will come in contact with employee arms. Formica type surface tops are preferred. The bottom of the bench will be sealed so it can be easily cleaned.

c. Chairs used in clean rooms will not contribute to particle generation. Most cushioned chairs are undesirable unless completely sealed. Metal, fiberglass, or similar type chairs are preferred. Those portions of chairs which will come in contact with the body during use, such as the seat and back rest, if made of metal, will be cool to the feel.

5-4. CLOTHING REQUIREMENTS.

a. The minimum clothing required in the conventional clean room are coveralls, caps, and clean room shoes. Shoe covers may be substituted for clean room shoes if shoes are not available, Additional clean room clothing such as frocks, hoods, and gloves may be required, depending on the end item requirements and the type of work being done.

b. Clothing specifications, laundry requirements, and general practices are described in paragraph 8-3.

5-5. OPERATION.

a. Entering procedures. The following shall apply:

(1) Before entering the change/locker room from an environmentally uncontrolled area, the employee removes his weather protective clothing such as raincoat, overcoat, boots, rubbers, etc., and puts them into his locker or place provided for their storage (see figure 5-2, ‘Sample Clean Room”). He then cleans his shoes with a shoe cleaner using the procedure prescribed by the shoe cleaner manufacturer. The cleaning procedure will prevent the cleaned shoe from becoming re-contaminated upon removal from the unit. A cleaner will effectively clean the sole of the shoe, including the indented area in front of the heel. A visual check will be made to insure that caked contaminants such as mud, dirt, sand, salt, cement, etc., have been moved from shoes and clothes. He shall then obtain a complete packaged uniform from the issue room and proceed to the change room. In the change room, if necessary, the employee washes his face and hands, using liquid detergent and a warm air drier.

(2) He shall then open the plastic bag and inspect the uniform for holes or tears. Any portion damaged shall be turned in for

repair and replaced with an undamaged garment. He will then don his uniform using care to minimize contamination. When donning shoes or shoe covers, personnel will not place the clean room shoe or shoe cover in the area previously occupied by the street shoe. Care shall be taken to wear the uniform properly and the following shall be checked prior to entering the clean room.

(a) All snaps/buttons/zippers shall be fastened snugly.

(b) Caps shall cover all hair possible, particularly above the forehead. Only a small portion of sideburns and the tuft at the back of the neck are allowed to be exposed.

(c) Hoods and snoods shall cover all hair possible, particularly above the forehead, and the hood/snood skirts shall be tucked inside the uniform collars.

(d) Coverall pants legs shall be tucked inside boot type shoe covers.

(e) If small shoe covers or clean room shoes are used, then the coverall pants leg shall fit snugly.

NOTE

Clean room shoe covers or shoes shall be donned last. Prior to entering the clean room the employee shall walk over a sole cleaner, gelatin, sticky or tacky mat in the air lock.

b. Exiting procedure. Upon leaving the clean room, the employee shall remove his clean room uniform and store it in a shielded area. If the lockers or shelves provided are not shielded, then he shall fold the uniform and place it in a plastic bag and place it on a shelf. The clean room shoes or shoe covers shall be handled similarly in a separate plastic bag. The employee may then leave the premises.

c. Employee Disciplines. Personnel requirements and employee disciplines are described in paragraph 8-1 of this Technical Order.

d. Parts, Tools, Equipment, and Material Cleaning. Cleaning practices for clean room work are described in paragraph 8-2 of this Technical Order.

(1) Prior to entry into the clean room, all parts, tools, equipment and material shall be cleaned. The selection of-cleaning methods is dependent on the type of contaminant, the materials of construction of the items to be cleaned, and the degree of cleanliness required.

(2) Large items of equipment being moved into the clean room will be thoroughly vacuumed prior to entry. Rough cleaning will be accomplished in an uncontrolled area; however, the final cleaning operation must be done in an air lock. This equipment will be moved into the clean room when operations in the room are “shut down” or at a minimum.

(3) Small hand tools used in the clean room will be cleaned (ultrasonically when possible) prior to entry and at scheduled intervals. The exact schedule will be determined by local management on an individual basis.

(4) General cleaning of parts will occur outside of the clean room. Pass-through boxes are used to transfer clean parts into the clean room. Where cleaning operations must be conducted inside the clean room, adequate ventilation for the cleaning equipment must be provided or the work shall be done in a reverse flow booth.

(5) All tools used in clean rooms shall be of approved types and meet the required specifications for material, hardness, corrosion resistance, particle generation, and overall acceptability of plating when tools are plated.

e. Material and Parts Handling.

(1) Material and parts shall be handled in "tote boxes" or plastic bags. The surface of the containers will be smooth to reduce the generation of particulate matter. Cleanliness is of utmost importance. The care exercised in cleaning of the container must be as thorough as that given the part to be carried.

(2) Parts which are sensitive to human contact shall never be handled by unprotected hands. Such precision components shall always be handled by tools or gloved hands. In most applications clean plastic, surgical gloves, or finger cots approved by the Physical Sciences Laboratory or the environmental officer will be suitable.

(3) Tools shall be stored in such a manner that they cannot pick up or transfer contaminants.

(4) Storage racks shall be easily cleaned, accumulate little dust, and be constructed of material which resists deterioration. It has been found that meat racks consisting of open bar or mesh grill are excellent storage racks in clean rooms.

5-6. ROOM MAINTENANCE.

a. Housekeeping. Good housekeeping practices are of prime importance in clean rooms. When cleaning a room, it must be kept in mind that the mere addition of cleaning personnel to the environment will increase the contamination level in the room. Therefore, the times the rooms are cleaned must be chosen with care. An important point to remember is that it will take some period of time for the increased contamination level caused by the cleaning operation to decrease. This length of time is dependent upon the number of air changes per hour. As the number of air changes increases, the length of time for the contamination level to reach operational standards decreases. With this in mind, cleaning will be scheduled locally.

b. Mopping. Cellulose mops and sponges shall be used with clean water. High grade plastic buckets which are not subject to flaking should be used, and if it is necessary that a detergent be used, a careful investigation by the clean room officer should be made to determine the "residue-producing" properties of the detergent. No standard test for this is available, therefore, the clean room officer shall judge detergents on a relative basis.

c. A central vacuum cleaning system or a portable vacuum cleaner with a filtered exhaust shall be employed for vacuum cleaning. This type of cleaning should be scheduled after the shift ends. Minor dry floor and bench vacuuming can be performed, if necessary, during room operation if the equipment and procedures used will insure a minimum of disturbance to settled particles.

d. Floors shall not be waxed.

e. Housekeeping equipment, utensils, and similar equipment are sources of contamination. Care shall be exercised while using the equipment so that room integrity is not harmed. Whenever these items are to be taken into the clean room, they will be thoroughly cleaned and vacuumed prior to their entry.

f. Each worker should be responsible for cleaning his assigned work station at periodic assigned intervals during the work shift. This prevents improper handling of the workpiece by room maintenance personnel.

5-7. MONITORING.

a. General. The clean room officer shall monitor at least once a month all conventional class 100,000 clean rooms at his base/activity for the particulate, pressure, temperature and humidity standards prescribed in table 3-1. Detailed monitoring procedures are described in Section IX. The purpose of this monitoring is for certification/decertification

of the facilities in accordance with paragraph 2-6. An occasional peaking of contamination is permissible for a few minutes time. However, continuing out-of-tolerance conditions indicate a serious problem with the clean room systems. These conditions are unacceptable and may be cause for decertification whereupon Management shall be informed as outlined in paragraph 2-6.

NOTE

When a statistical analysis is used to determine the reliability of a clean room remaining in control, a computer program is available in CREATE on the AFLC time sharing computer.

b. Particulate contamination. The contamination level varies throughout a conventional clean room but should always remain below the standards during work shifts. Figure 5-3 represents contamination at a particular location for a 24 hour period. The contamination variation is caused by turbulent air conditions and the varying amounts of particles being generated throughout the room. The highest level of contamination is not necessarily near the exhaust air ducts. The important portions of any class 100,000 clean room are the workbenches and the areas surrounding the products being worked. A qualitative identification of airborne contaminants may be requested where room contamination levels remain above operational standards. Identification will help trace and eliminate the cause of contamination. Identification of most airborne particles may be made by using the following techniques: A standard microscope, a polarizing microscope, an electron microprobe or micro-chemical analysis.

c. Temperature. The temperature within a room varies from point to point. This temperature variance is sometimes referred to as the temperature gradient within the room. Since cool air is entering the room from the air conditioner and heat is being liberated to the air from people and equipment, different level and regions of temperature are to be expected through the room. The three to five foot elevation is of prime importance, and temperature control must be maintained in this zone. No reading should be taken within two feet of a heat producing unit. Unless a product is very sensitive to the rate of temperature change, temperature can be monitored at any convenient spot. If necessary, an alarm system may be placed within the supply air duct to warn of any sudden malfunction of the air conditioning system.

d. Humidity. Humidity can become troublesome if it is allowed to reach a low level where static charges are generated by clean room personnel or a high level where metallic oxidation may be a problem. Generally speaking, a relative humidity level of no less than 30% and no more than 50% is desired. There are many clean rooms that are functioning at humidity levels of less than 30%. This is possible only because the ambient humidity is very low and they are experiencing no difficulty with static electricity. Relatively few products are supersensitive to humidity tolerance; therefore, close humidity tolerances are usually not necessary.. For those items where humidity tolerance is critical, special control measures should be employed.

e. Pressure. Positive pressure shall be maintained in conventional clean rooms in order that contaminated air will not flow toward the clean area. The air flow is always from the clean space outward to a contaminated area.

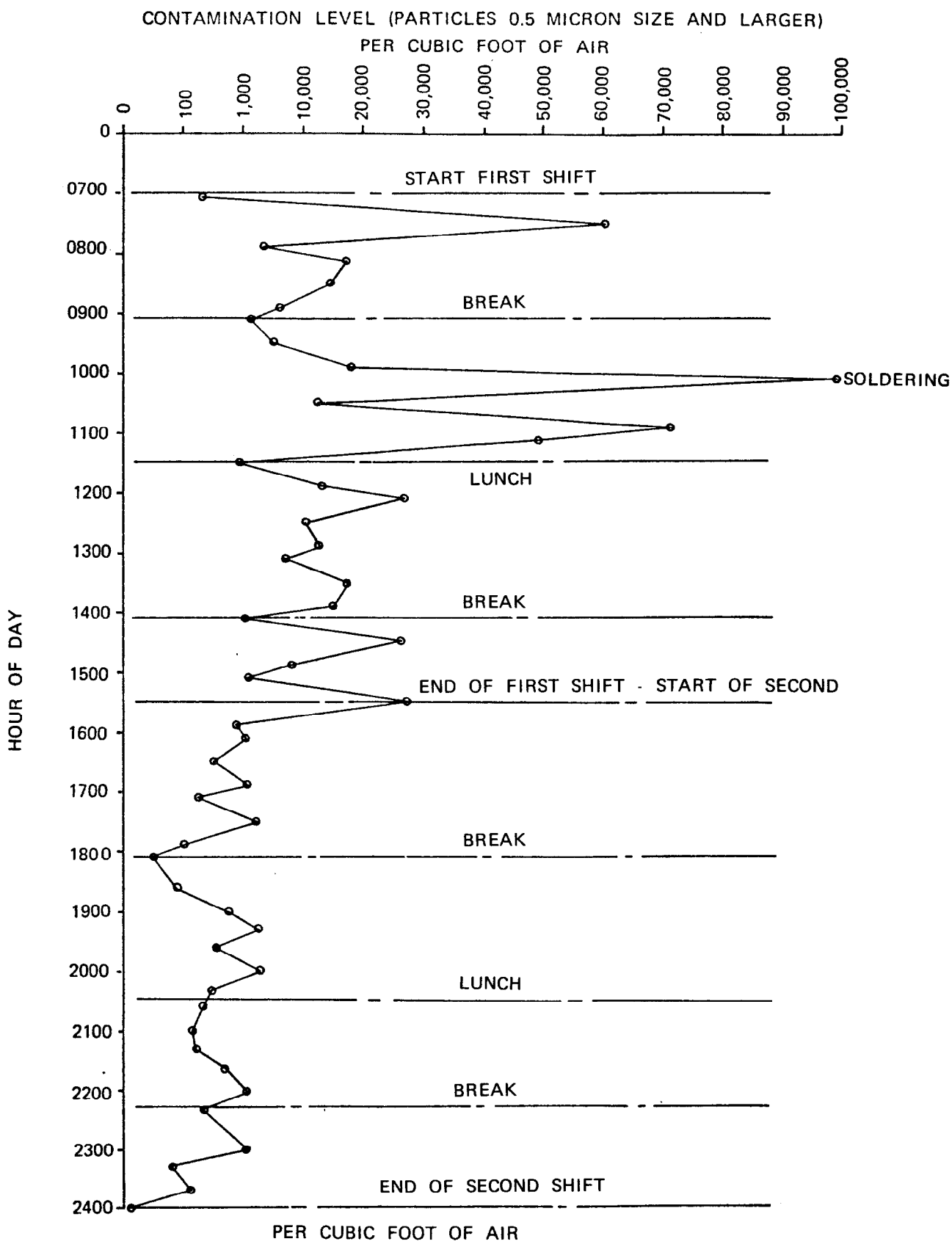

Figure 5-3. Typical Conventional Clean Room (Class 100,000) Contamination Levels

SECTION VI

LAMINAR FLOW CLEAN ROOMS

CROSS FLOW (CLASS 10,000) AND DOWN FLOW (CLASS 1,000)

6-1. GENERAL.

a. Laminar flow clean rooms are the latest in clean room design and are second generation to conventional clean rooms. A higher level of cleanliness can be maintained in these type facilities because of the nature of laminar air flow patterns. Turbulent air flow patterns, which are characteristic of conventional clean rooms, tend to stir up and keep internally generated contamination in the air mass that lingers within the room. Laminar air flow patterns, which are essentially unidirectional as the air flows from the air supply to the exhaust, eliminate or substantially reduce the turbulent flow, and produce a cleaner air mass within the room. These types of clean rooms are generally classified as cross-flow (class 10,000) and down-flow (class 1,000), but are capable of being maintained at class 100. Laminar flow clean rooms have proven their worth in terms of economy and positive contamination control, and will be the only types constructed by the Air Force in the future.

b. Compliance with the following sections is required:

Section II	RESPONSIBILITIES
Section VIII	GENERAL CLEAN ROOM PRACTICES

6-2. DESIGN AND CONSTRUCTION.

a. Facility design. See Section III for reference to Air Force design and construction manuals.

b. Types. Although the cross-flow and the down-flow laminar flow clean rooms are generally considered the two basic configurations, other variations should be noted. The following types are used in the Air Force.

(1) Cross-flow. When the air flow is essentially horizontal, flowing from one wall to an opposite exit wall, the clean room is called a cross-flow or horizontal laminar flow clean room. A typical cross-flow room is shown in figure 6-1. Some degree of air cleanliness will be sacrificed toward the exhaust end of the room.

(2) Down-flow. When the air moves from ceiling to floor with the floor serving as the return air grille, the room is called a down-flow or vertical laminar flow clean room. The down-flow design provides the greatest contamination control over the entire working area because airborne contamination is immediately carried down and out of the room as soon as it is generated. Down-flow rooms also take advantage of the force of gravity on larger particles for removal; therefore, the air velocity can be less in a down-flow room (50 ft per min) than the cross-flow room (100 ft per min). A typical down-flow room is shown in figure 6-2. It will be possible to maintain a down-flow room at class 100 if required.

(3) Twin cross-flow clean room. This type of facility is actually two cross-flow clean rooms placed side by side as shown in figure 6-3. One room returns the air for the other room. This design allows for some dollar savings over one large cross-flow clean room. It allows small workloads to be handled in individual rooms, usually resulting in better layout.

(4) Down flow curtain unit. The down flow curtain unit is portable and is a

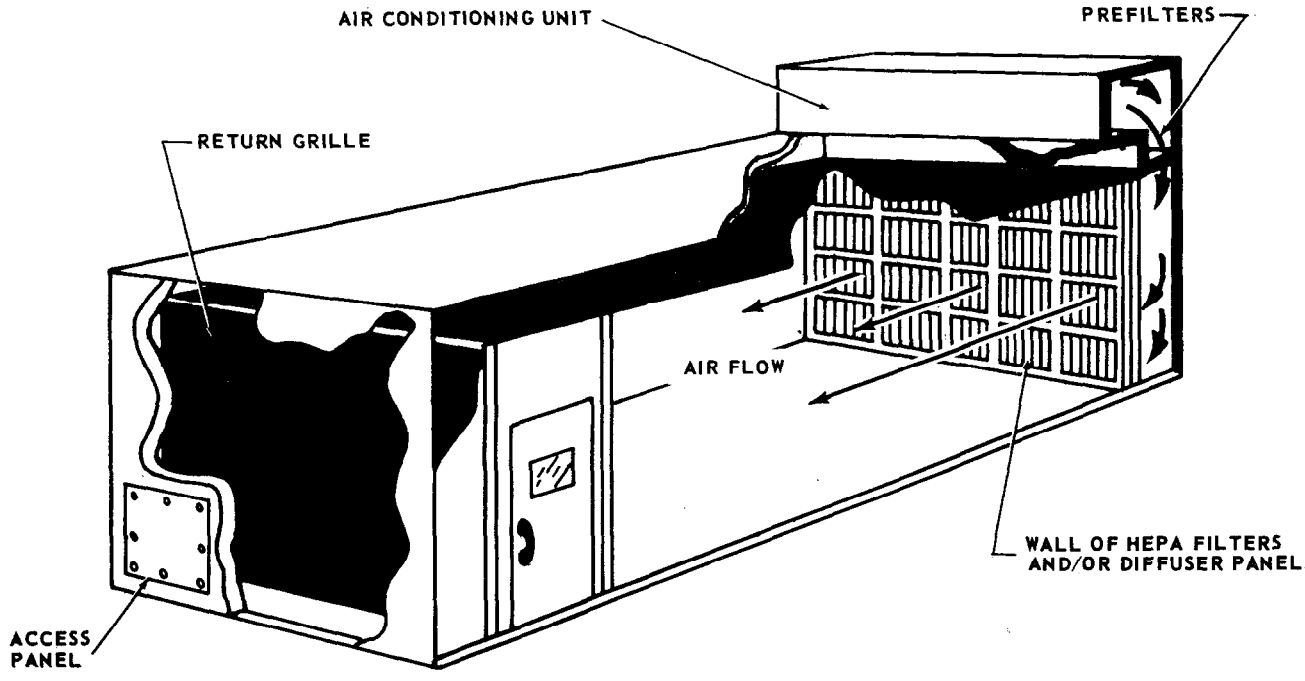

Figure 6-1. Laminar Cross-Flow Room

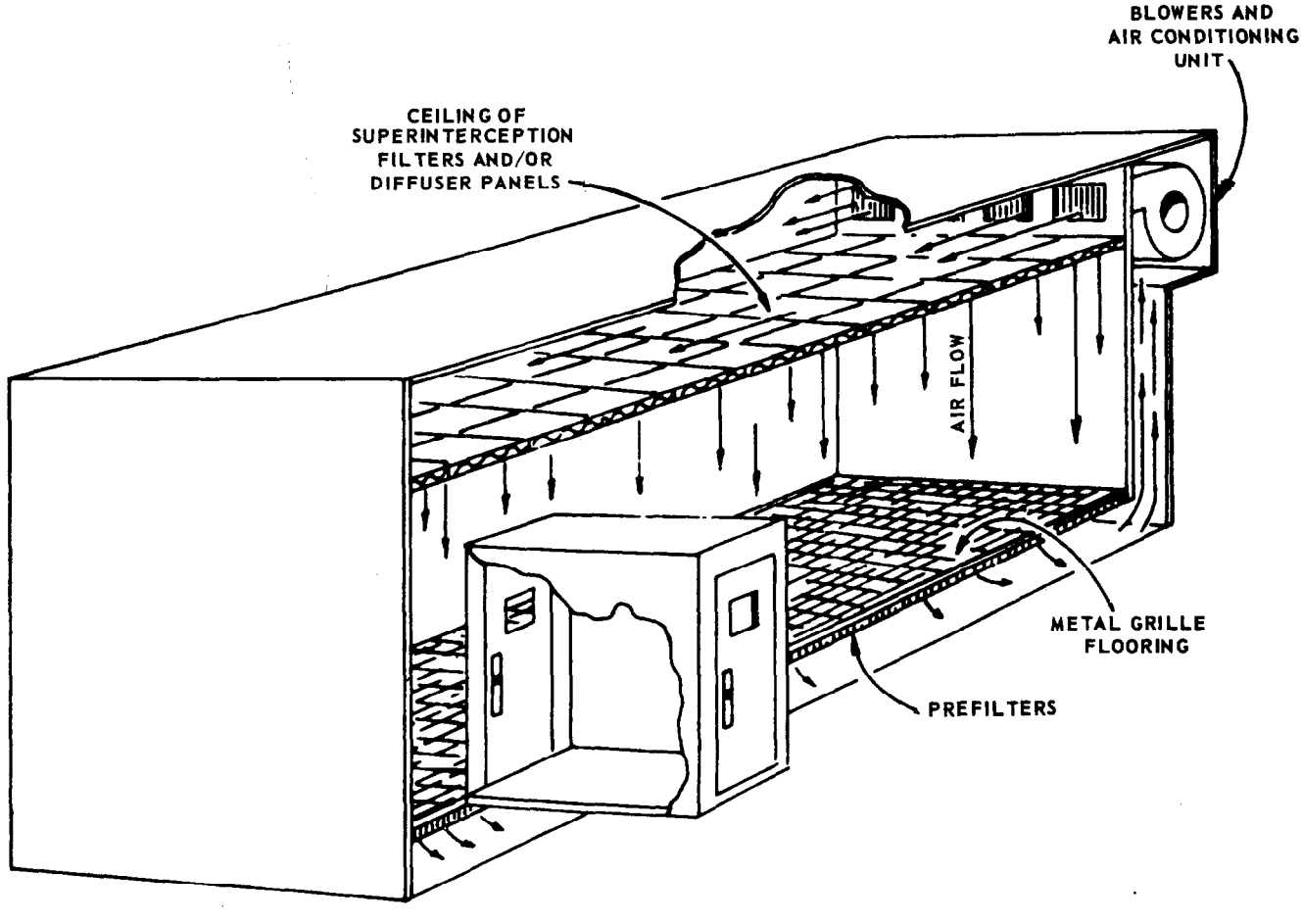

Figure 6-2. Laminar Down-Flow Room

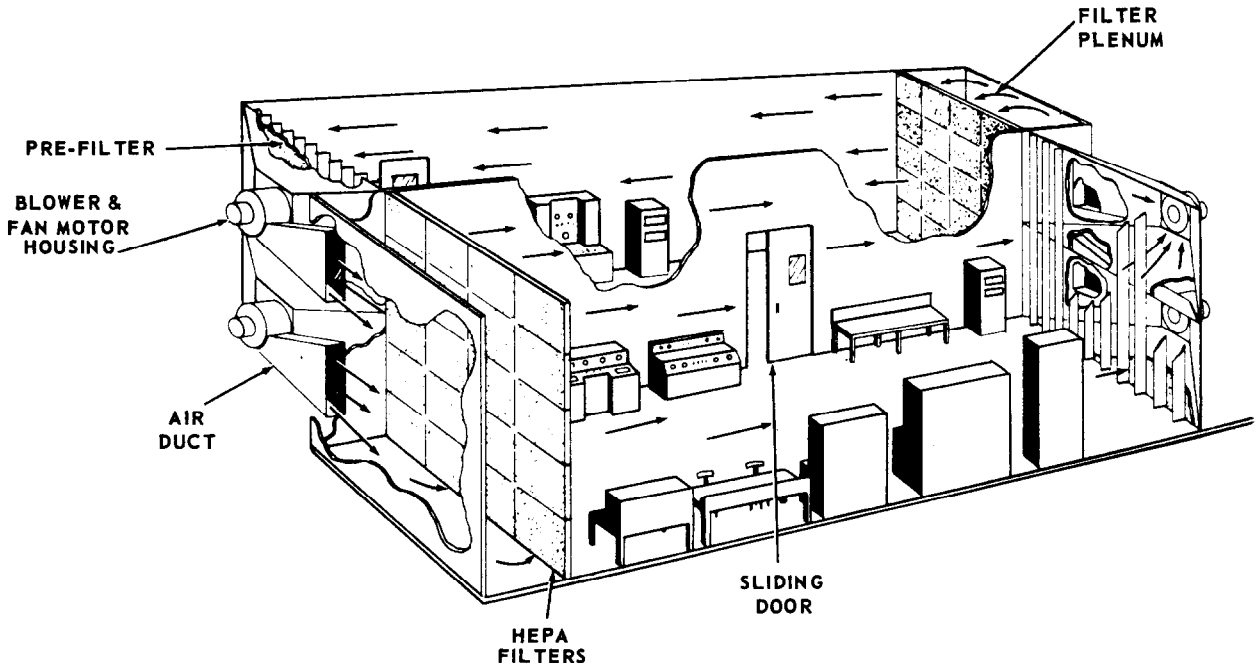

Figure 6-3. Twin Cross-Flow Room

compromise between a laminar down flow room and an individual down flow clean work station. The air handling equipment and HE PA filters are located on an overhead framework supported by legs as shown in figure 6-4. The filtered air flows downward and exits under the plastic curtain sidewalls. The unit can be mounted on casters and rolled into any position with ease.

(5) Tunnel clean room. The tunnel clean room combines features of the cross flow room and the down flow curtain unit. The tunnel is made of prefabricated modules which can be assembled and disassembled with relative ease, giving a high degree of portability. The air handling equipment and HEPA filter bank are located at one end while the opposite end is open. The tunnel can be extended to 70 feet in length and made to any width. A typical unit is shown in figure 6-5. The unit will provide cleanliness approaching that of a cross flow room.

c. Air handling equipment. The air handling system for a horizontal laminar flow clean room will be designed for an air velocity of 100 feet per minute at the filter face. HEPA filters must be placed to fill the entire cross section of one wall or a good laminar air flow pattern will not develop. The air handling system for a vertical laminar flow clean room will be designed for an air velocity of 50 feet per minute at the filter face, The entire ceiling will be filled with HEPA filters or diffuser panels (after filtration) in order to obtain a good laminar flow pattern (see figure 6 -2).

6-3. CLOTHING REQUIREMENTS.

Clean room clothing, such as a smock/frock and cap/hood/snood, is required in a lammar flow clean room. Additional clothing, as determined by the operating management, may be necessary to prevent contamination of the work by skin oil, hair, dandruff, etc.

6-4. OPERATION.

a. The operation of laminar flow clean rooms is similar to that of conventional clean rooms in many respects but different in others. The main difference is the importance of locating equipment within laminar flow rooms to minimize eddy

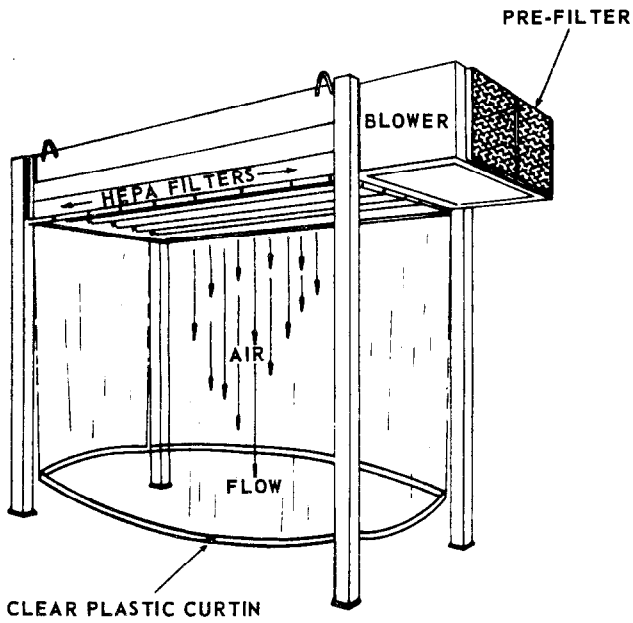

Figure 6-4. Down-Flow Curtain Unit (Portable)

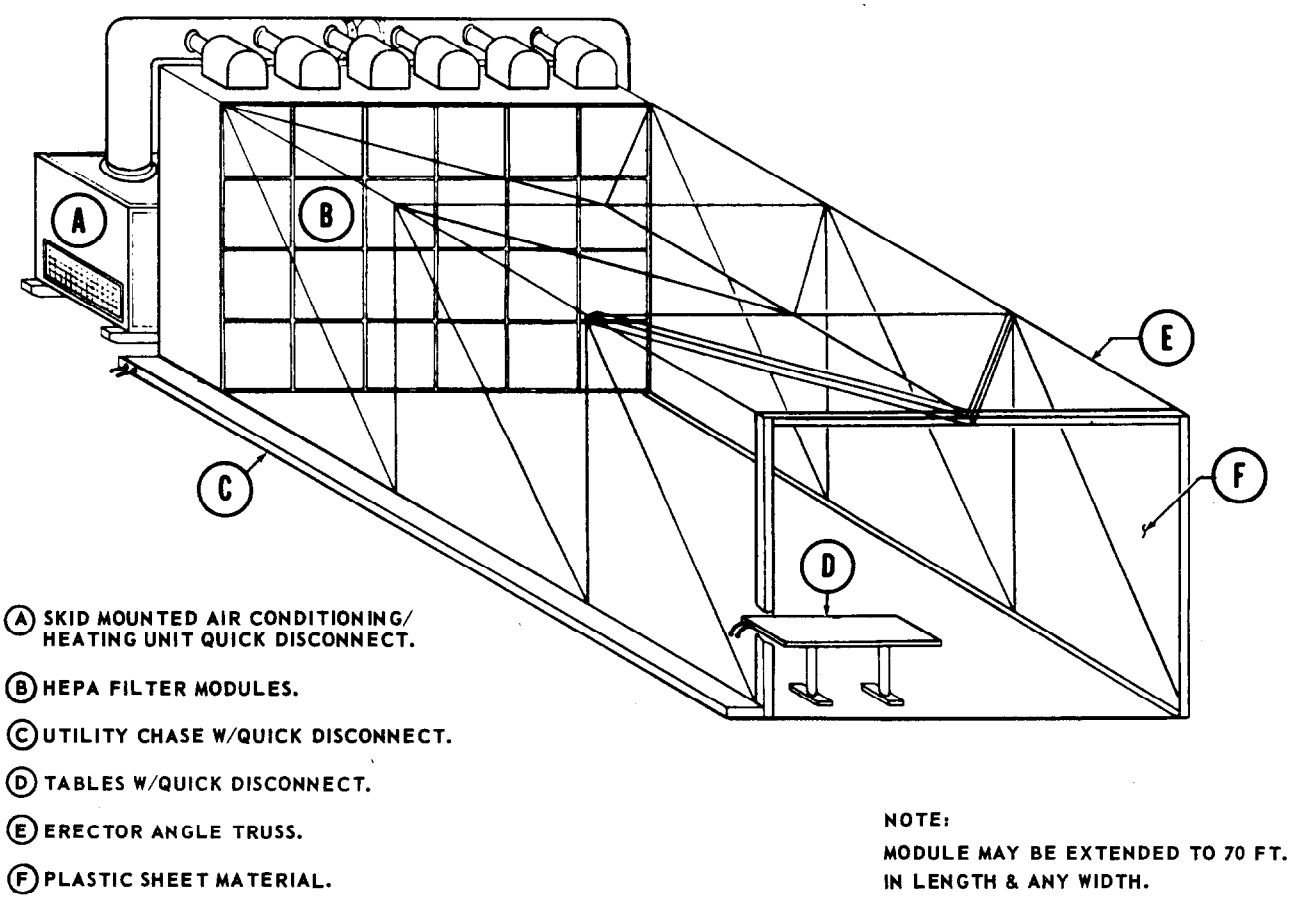

Figure 6-5. Tunnel Clean Room (Prefab Module)

currents or turbulent air flow patterns. Equipment layout requirements are described in paragraph 5-3b. Similarity in operation will require adherence to the following paragraphs in Section V:

(1) Use of proper furniture and fixtures (5-3).

(2) Parts, tools, equipment, and material cleaning (5-5d).

(3) Material and parts handling (5-5e).

b. Equipment layout. Equipment layout is important in laminar flow rooms and many things must be considered in order to minimize turbulent air flow patterns. It is imperative that equipment is spaced and located in such a manner that interferences with the laminar air flow patterns will be minimized. If laminar air flow patterns are not maintained and eddy currents are formed, then the design integrity of the clean room will be destroyed. The type of work being done, end item flow, personnel flow, equipment sizes, emission patterns, etc. are all important and must be analyzed in detail in order to obtain the optimum air flow patterns.

(1) Cross-flow rooms layout. Figures 6-6 and 6-7 illustrate the emission patterns when personnel or objects are located in the air stream of cross-flow rooms. The size of dead air spaces and eddy currents depends on the size of objects deflecting the air stream. For utmost utilization of a facility, steps should be taken to determine the length, width and depth of these patterns. Equipment in a cross-flow room shall have the widest side parallel to the air stream. The only exceptions will be those reviewed and approved by the clean room officer. Operations requiring the highest environmental control shall be located closest to the inlet air filter bank, and operations that require less stringent control of the environment and those that produce contamination should be located on the exhaust side of the room. No equipment shall be placed within 2 feet of the inlet air filter bank wall without review and approval of the clean room officer and only open equipment such as plain tables, wire storage racks, etc., may he placed within 2 to 5 feet of the inlet air filter bank. Open equipment such as plain tables, wire storage racks, etc. may be placed within 2 to 5 feet of the inlet air filter bank. Enclosed equipment up to 2 feet wide such as test consoles, cabinets, etc. should not be closer than 5 feet to the filter bank. Care should he exercised in placement of this type equipment because small eddy currents are likely to occur. Location of enclosed equipment more than 2 feet wide requires special consideration because eddy currents will be formed. It is desirable to locate large equipment near the exhaust end of the room. Figure 6-8 shows a typical layout where workbenches are placed upstream and the larger consoles are located at the exhaust end of the room, thus minimizing the disruption of laminar air flow patterns. Staggering equipment and personnel may also help in minimizing the disruption of air flows. After all layouts are complete and equipment located, the air flow pattern must be checked by the environmental officer, and if necessary, equipment and personnel will be relocated to eliminate dead air space or poor flow patterns.

(2) Down-flow rooms layout. In a down-flow room, less concern need be given to equipment layout since contamination will exit through the floor as it is generated at any work station. At least 2 feet shall be maintained between large items of equipment and between all equipment and all walls. This arrangement is necessary for the air flow patterns to "wash" contamination down and around equipment. Smaller equipment, narrow tables and workbenches may be placed end to end to form rows if aisles are maintained on each side of the row. Figure 6-9 illustrates the emission pattern and figure 6-10 illustrates the proper equipment layout in a down-flow clean room

After all layouts are complete and equipment located, the air flow pattern must be checked by the environmental officer and if necessary, equipment and personnel will be relocated to eliminate poor flow patterns.

c. Entering and exiting: Some laminar flow clean rooms have the same locker/change room support facilities as conventional clean rooms and others do not. For those laminar flow clean rooms that have similar facilities, the entering and exiting procedure shall be the same as for conventional clean rooms as described in paragraphs 5-5a and 5-5b. For those laminar flow clean rooms that do not have locker/change room support facilities, the following entering and exiting procedures shall be adhered to:

(1) Cross-flow rooms. Personnel entering shall stow all over garments outside the room. They shall clean their shoes with a shoe cleaner prior to entering the clean room and proceed directly to a portion of the downstream side of the room specifically designated as the change area. They shall don a smock or frock and a cap or hood. Wall mirrors shall be provided in the change area so that personnel may check their clean room dress prior to proceeding to their work area. Exiting personnel shall proceed to the change area and remove their clean room garments, stow them in a place provided in the area and proceed directly to the exit.

(2) Down-flow rooms. Personnel entering shall stow all over garments outside the room. They shall clean their shoes with a shoe cleaner prior to entering the clean room and proceed directly to a portion of the room near the entrance specifically designated as the change area. They shall don a smock or frock and a cap or hood. Wall mirrors shall be provided in the change area so that personnel may check their clean room dress prior to proceeding to their work area. Exiting personnel shall proceed to the change area and remove their clean room garments, stow them in a place provided in the area, and proceed directly to the exit.

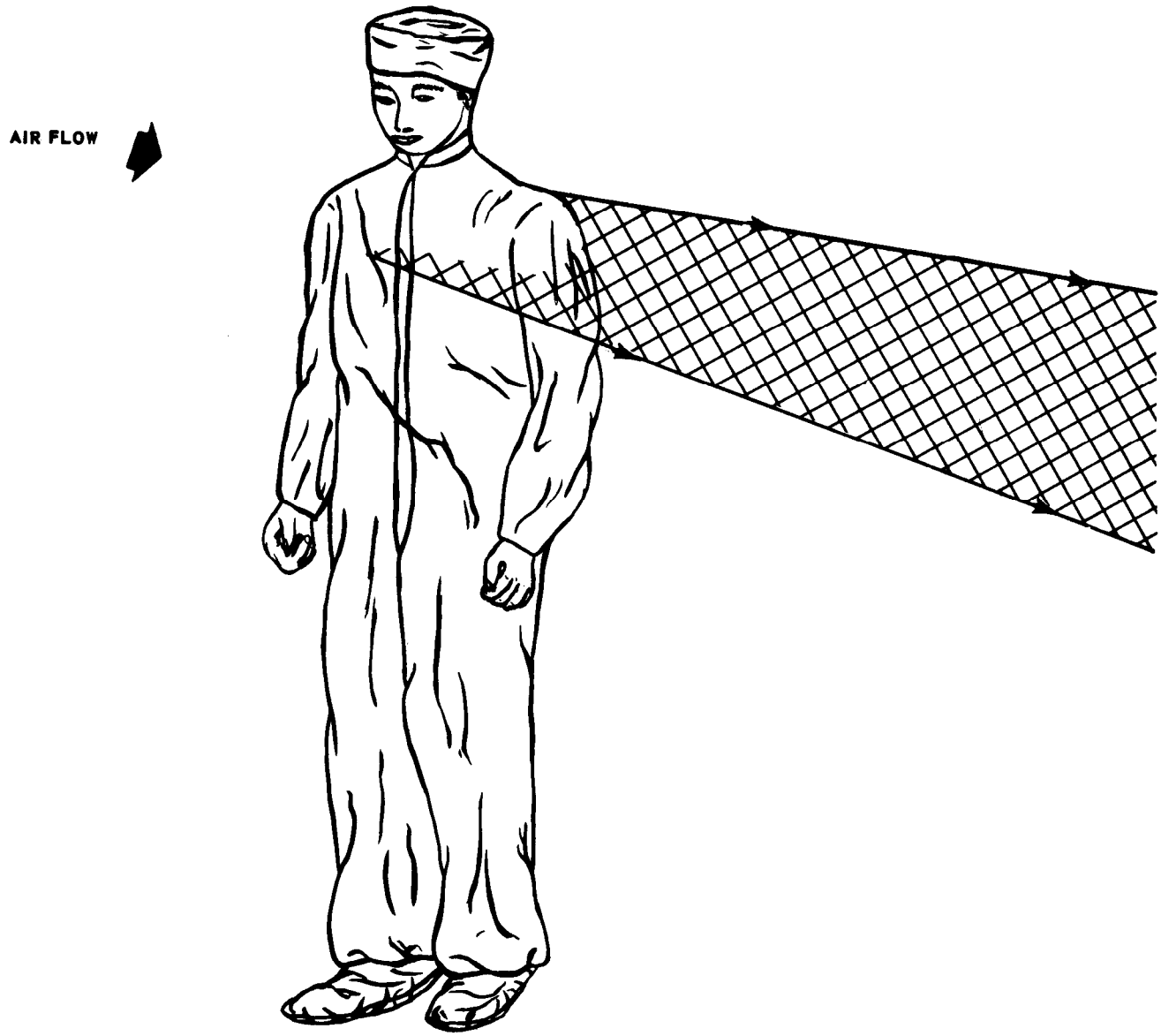

Figure 6-6. Emission Pattern Cross-Flow Room

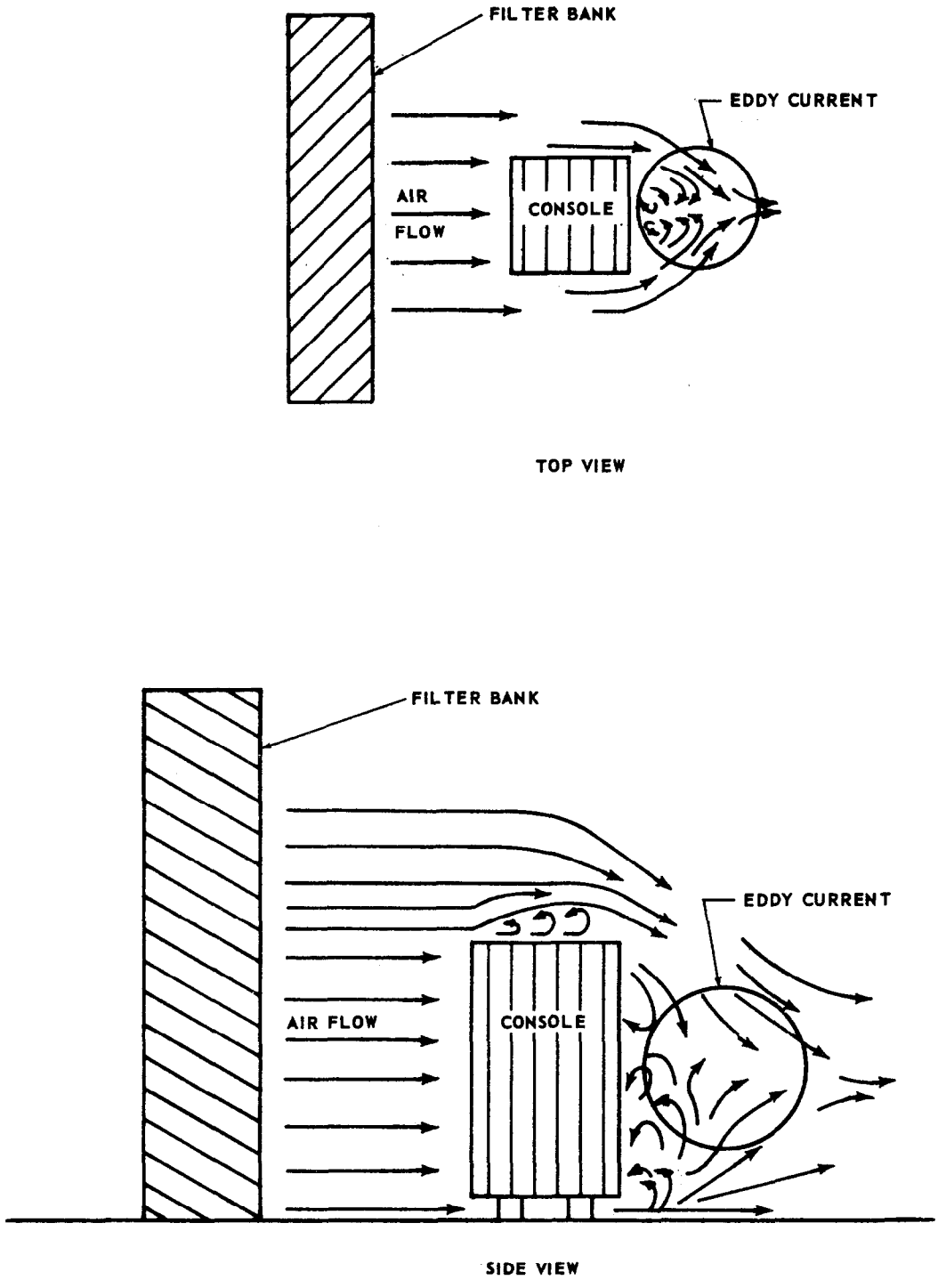

Figure 6-7. Air Pattern Created in a Cross-Flow Clean Room

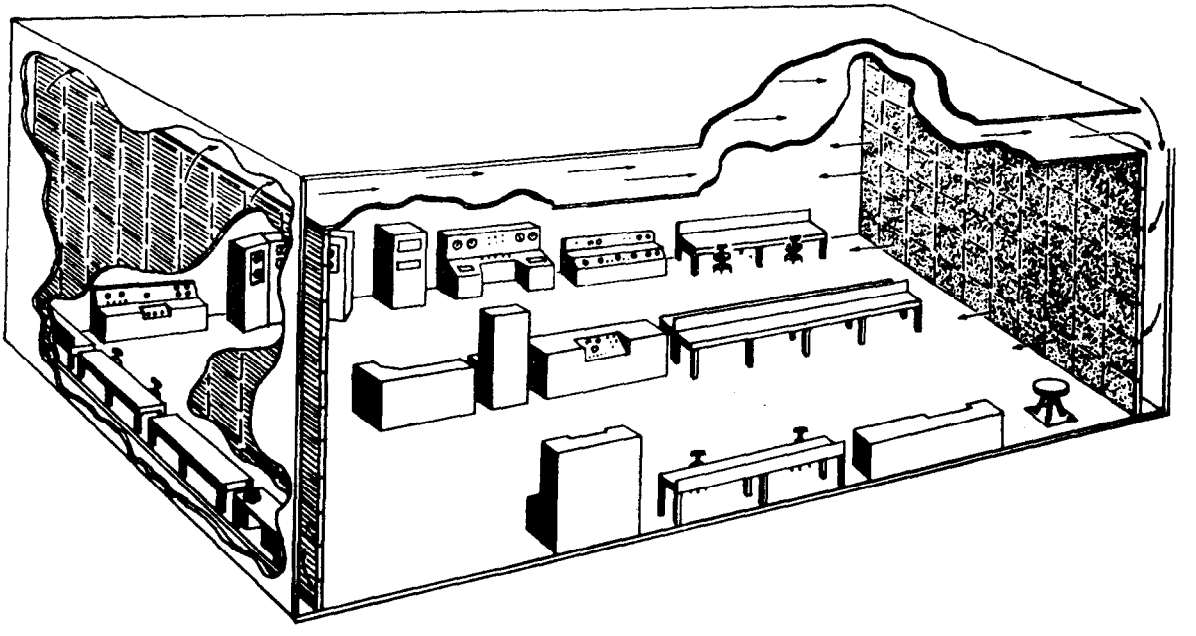

Figure 6-8. Cross-Flow Clean Room Layout with Various Bench and Console Operations

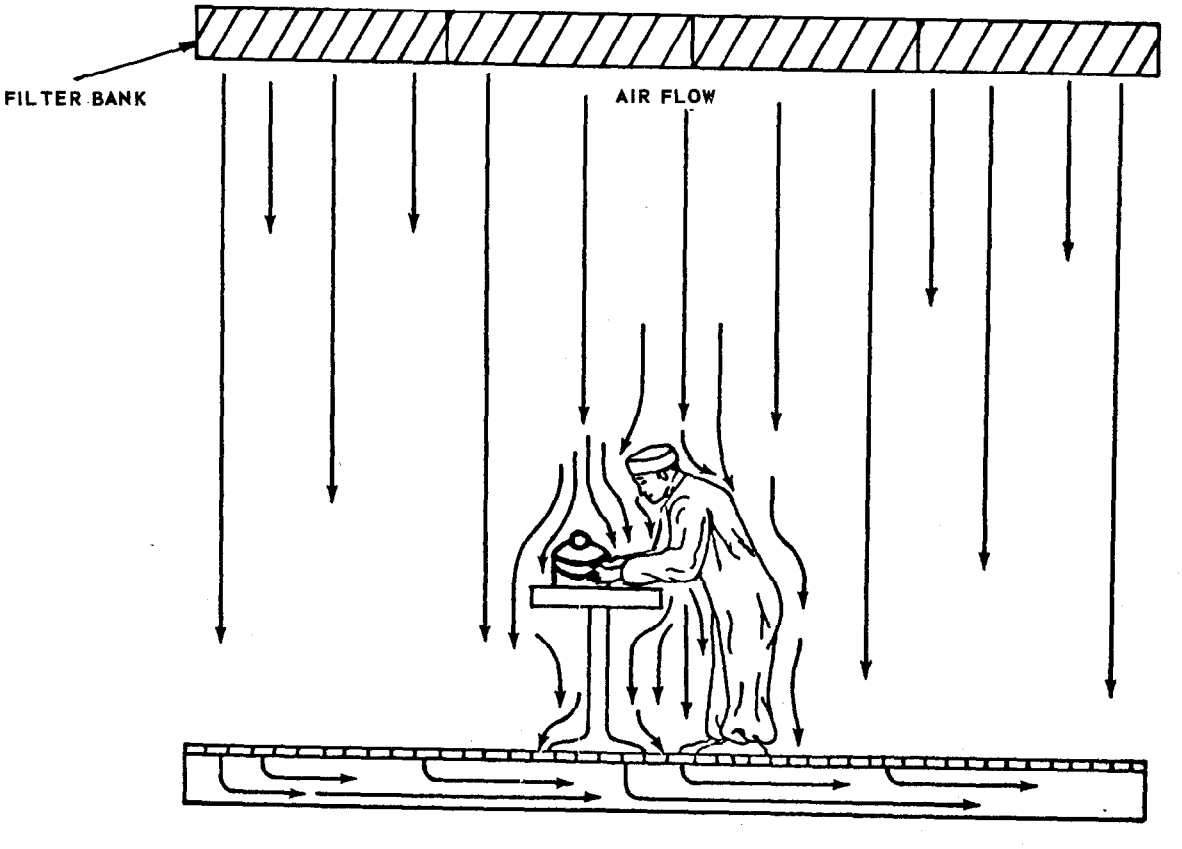

Figure 6-9. Emission Pattern Down-Flow Clean Room

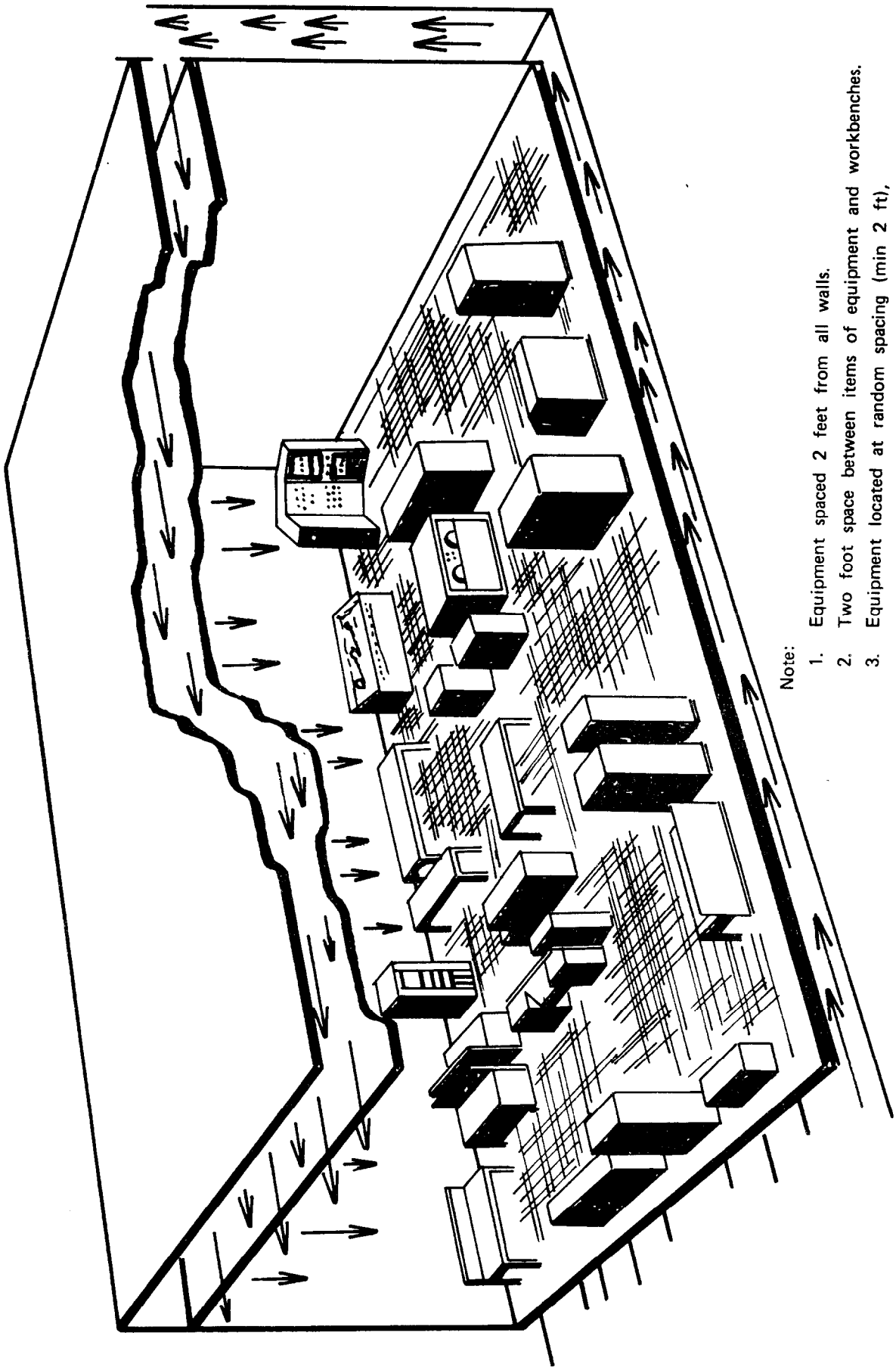

Note:

1. Equipment spaced 2 feet from all walls.
2. Two foot space between items of equipment and workbenches.
3. Equipment located at random spacing (min 2 ft).

Figure 6-10. Down-Flow Clean Room Layout

6-5. ROOM MAINTENANCE.

Good housekeeping practices are of prime importance in laminar flow clean rooms. The presence of people within the rooms adds significantly to the contamination level. Rooms shall be cleaned in accordance with local schedules established to be consistent with the class of clean room. The clean up time of the air within the room will be rapid due to the laminar flow characteristics of the air.

6-6. MONITORING.

a. General. The clean room officer shall monitor at least once a month all laminar flow rooms at his base/facility for the particulate contamination, pressure, temperature, air velocity, and humidity standards prescribed in table 3-1. Detailed monitoring procedures are described in Section IX. The purpose of this monitoring is for certification/decertification of the facilities in accordance withparagraph 2-6. An occasional peaking of contamination is permissible for a few minutes time. However, continuing out of tolerance conditions indicate a serious problem with the air filtration system. These conditions are unacceptable and may be cause for decertification whereupon Management shall be informed as outlined in paragraph 2-6.

b. Particulate contamination. Since turbulent conditions do not prevail in laminar flow rooms, particulate monitoring presents some problems. In cross flow rooms, levels of particulate contamination will vary in proportion to the distance from the filter bank wall. Work areas that are downstream of other work areas are susceptible to higher contamination levels. Contamination levels may be higher around particular workbench operations, and are highest during peak operations when the room is fully manned. Levels of particulate contamination in down-flow rooms are generally consistent throughout the room. In either case, the workbenches and areas surrounding the work area are critical, and particle counts should be made in these areas.

c. For comments on temperature, humidity, and pressure monitoring, refer to paragraphs 5-7c, 5-7d, and 5-7e.

d. Air velocity shall be checked for compliance with the requirements specified in table 3-1. In cross-flow rooms the air velocity shall not vary more than 20 ft per minute throughout the facility, and shall not drop below 75 ft per minute at any work station or operation being performed (isolated deviations, if warranted, may be approved by the clean room officer). In down-flow rooms, the air velocity should not drop below 50 ft per minute at any work station.

SECTION VII

LAMINAR FLOW CLEAN WORK STATIONS (CLASS 100 AND CLASS 1,000)

7-1. DESCRIPTION.

a. Laminar flow clean work stations offer a high degree of flexibility to operations which must be performed where clean rooms are not available or practical. In such situations the ambient contamination level of the room will be very high in comparison to the environment within the laminar flow work stations. Laminar flow work stations operate on the principle of removing contamination from the work space as soon as it is generated. It accomplishes this by blowing clean air from HEPA filters over the work area at a velocity of 100 ft per minute. The laminar air flow is unidirectional and carries contamination away from the work. Laminar flow work stations are available as modular units and are likened to building blocks which can be arranged in various configurations to handle many different product lines. Increased clean room flexibility can be achieved by using modular units that permit various arrangements within the room. The size and shape of the workbenches may vary, depending on the type of work being performed.

b. Laminar flow clean work stations are designed to achieve the highest class cleanness (Class 100) specified in this Technical Order, but they may also be used to achieve Class 1,000. If a laminar flow work station is used to achieve a lesser clean condition than class 100, then it shall be labeled for that class and be monitored for the higher particulate count. Class 100 laminar flow clean work stations are normally located in conventional clean rooms, controlled areas, or laminar flow clean rooms as defined by this Technical Order. Class 1,000 or higher clean work stations are normally located in controlled areas or air conditioned rooms. If clean work stations are placed in air conditioned spaces, care must be exercised to assure that air flow patterns within the work station are not disturbed by turbulent air flow from outside areas when doors are opened and closed.

7-2. DESIGN.

a. Laminar flow clean work stations are standard commercial equipment items and are federally stock listed under FSC 3694 which is managed by Warner Robins Air Logistics Center, Directorate of Material Management. The following design considerations are mandatory:

(1) Material. A smooth, durable material not susceptible to flaking must be used such as glass, plexiglass, laminated panels, stainless steel, or equivalent material.

(2) Particle Count. Air filtration must meet the particle count of class 100 (Fed-Std-209) with no more than 100 particles per cubic foot of atmosphere 0.5 micron and larger. This condition must be met throughout the entire workbench upstream of the work piece unless the workbench is labeled for a lesser cleanliness level (class 1,000).

(3) Filters. The final filters shall be high efficiency of 99.97% rated by D.O.P.* Test. The filters shall conform to MIL-F-51068 and shall be tested before installation. The prefilters can be disposable or of a material capable of being cleaned and reused. The HEPA filters shall be absolutely sealed.

(4) Air Flow, An average velocity shall be between 72 and 200 ft per minute at any point. No single reading shall be less than 72 feet per minute at any point. It is very important that the air flow be essentially laminar. The clean work station is enclosed on the sides and top to insure laminar flow and prevent air currents from causing contamination of the workbench.

*Dioctyl-phthalate smoke test. This test measures the amount of three tenths micron chemical smoke that the filter will pass. This size is the most difficult to remove since it tends to follow the air stream through the filter.

(5) Illumination. Shadowless illumination with a minimum intensity of 100 foot candles will be provided at bench level. Precautions will be taken to avoid glare and excessive illumination.

b. Types. The size or shape of the clean work station may vary depending on the type of work being performed. The flow of air may be horizontal or vertical as long as the flow is essentially laminar and achieves the cleanliness level desired. Various configurations of clean work stations are available to adapt to most any requirement. Some of the units are floor mounted while others can be placed directly on top of standard workbenches. Basic configurations are as follows:

(1) Horizontal Clean Work Station. This bench brings the air in from underneath and exhausts in a horizontal direction across the workbench as illustrated in figure 7-1.

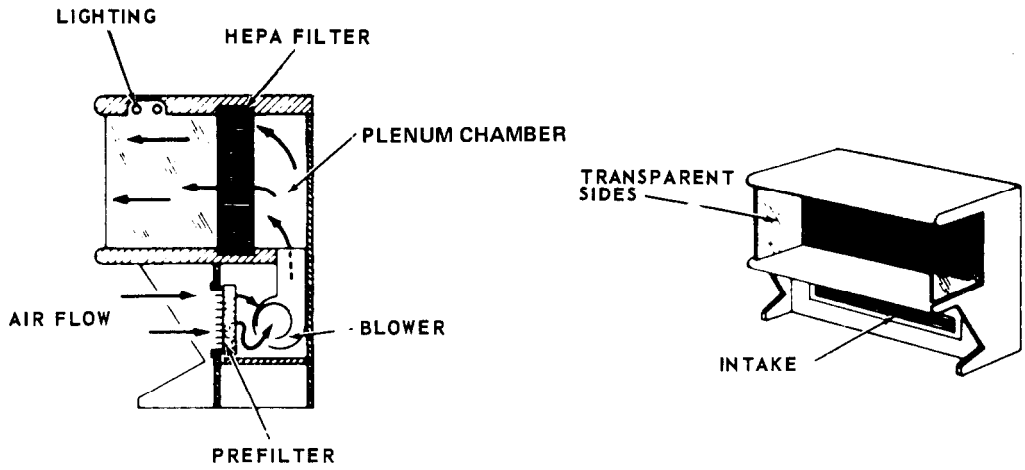

Figure 7-1. Horizontal Clean Workbench

(2) Vertical Clean Work Station. This bench brings the air from the front lower side and exhausts in a downward vertical fashion as illustrated in figure 7-2.

(3) Reverse Flow Work Station. This bench contains the same accessories as the other types except the filters and air flows are reversed as illustrated in figure 7-3. This bench can be used for soldering operations and to disassemble components that would otherwise contaminate the room. It is important to note that all work accomplished within reverse flow benches must be strictly controlled. All reverse flow benches will be provided with adequate vacuum attachments which will be used to clean bench surfaces and prefilters as work progresses. If the reverse flow work station exhausts back into the clean environmentally controlled area, then the work station shall be certified as specified by the environmental officer (for the exhaust air) in accordance with paragraph 2-5b(1).

(4) Portable Down Flow Clean Work Station. This work station has a self-contained blower and filter system and is used primarily to isolate large items of system hardware that require environmental classes 1,000 or 100. Figure 7-4 illustrates a typical portable clean work station.

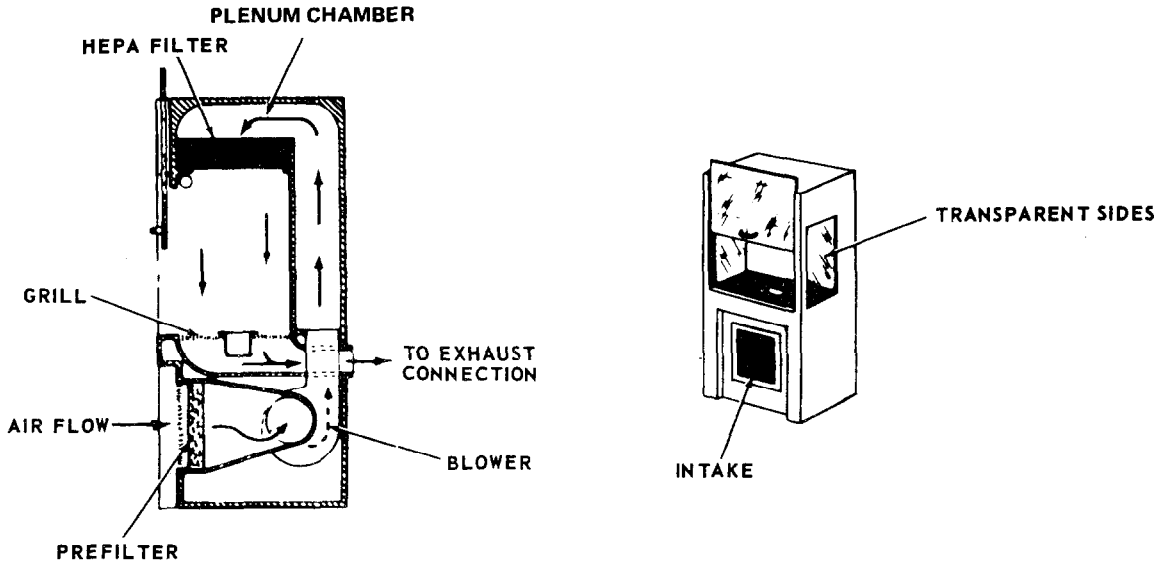

Figure 7-2. Vertical Clean Workbench

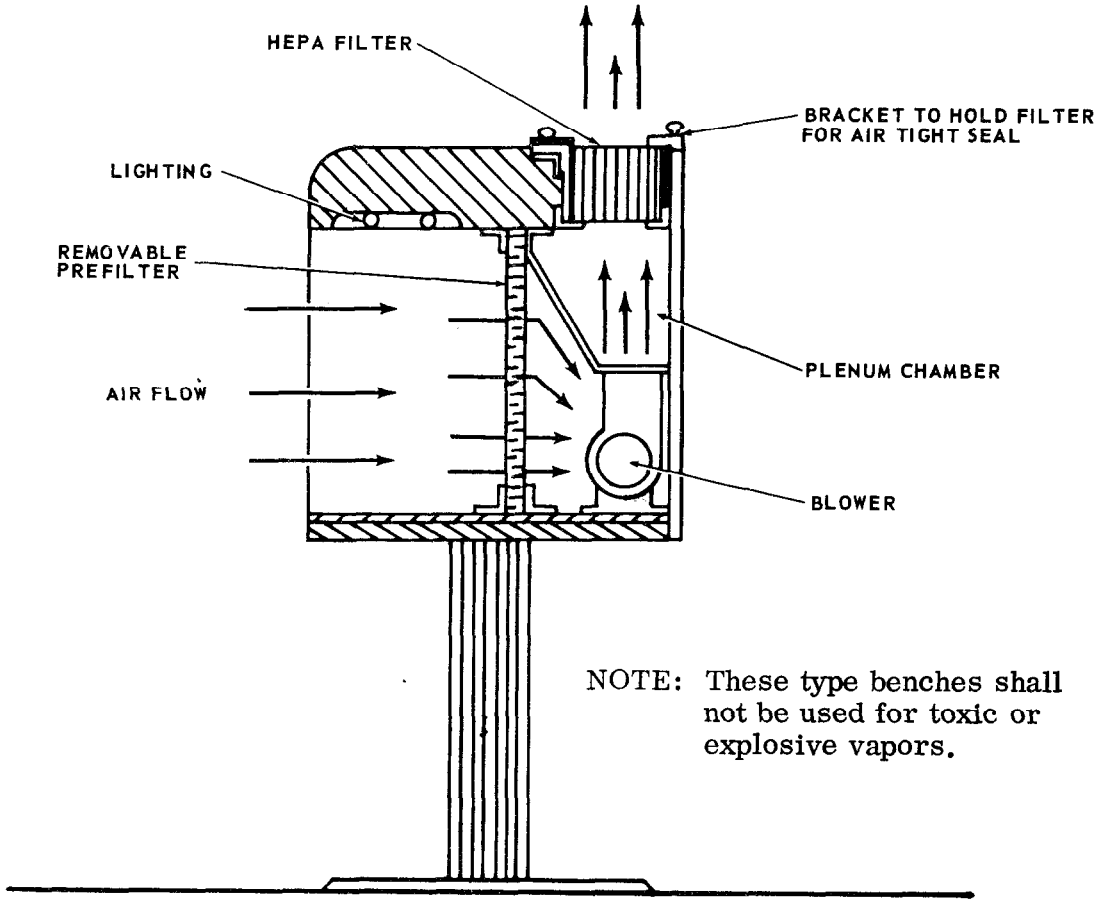

NOTE: These type benches shall not be used for toxic or explosive vapors.

Figure 7-3. Reverse Flow Workbench

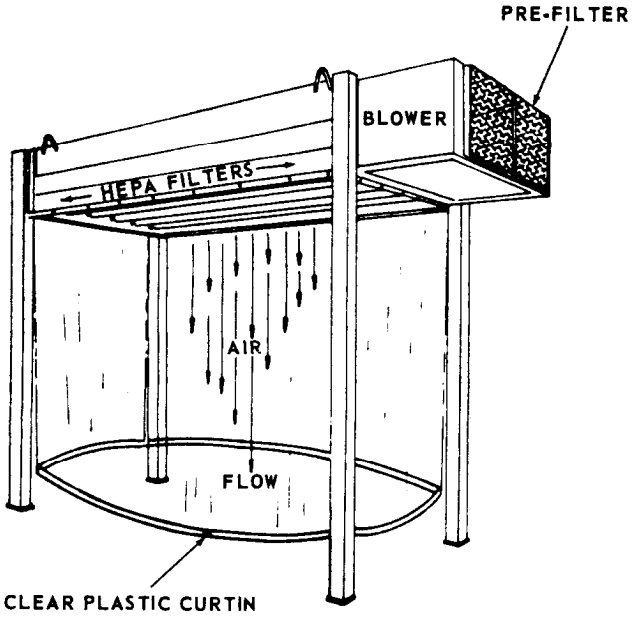

Figure 7-4. Down-Flow Clean Booth (Portable)

(5) Dual Laminar Flow Clean Work Station. This bench operates similar to the horizontal bench except air is brought in from the top and exhausted through two banks of HEPA filters horizontally in opposite directions as illustrated in figure 7-5.

(6) Air Conditioned Clean Work Station. This bench is the only clean work station that can be used in spaces that are not air conditioned. The air conditioning unit and HEPA filters are integral parts of the unit as illustrated in figure 7-6, and the environmental conditions within the hood can be controlled independent of the surrounding atmosphere. The air flow through the work area may be horizontal or vertical. The use of air conditioned clean work stations should be limited because of their high cost.

c. Group application to achieve room cleanness. Laminar flow clean work stations may be placed as a group in an existing conventional clean room, a controlled area, or an air conditioned room. Such a layout will use the recirculation capacity of the clean workbenches to clean the room. A room utilizing 20% of its floor area with clean work stations can expect approximately 100 room air changes per hour through the HEPA filters of the clean work stations. If the supply air to the room also passes through HEPA filters, such recirculation and filtration of air through clean work stations will cause the room contamination level to approach the contamination level of the clean work station. If the supply air to the room does not pass through HEPA filters, the contamination level will approach that of a conventional clean room or better.

7-3. OPERATION.

a. General. Clean work stations are designed to filter contamination from the surrounding air of the environment in which they are placed. The recovery rate (time for the first input air to reach the last work station exit point) of the clean work station will be only a matter of minutes. It is not necessary to operate these units 24 hours a day unless required for supplemental help in the control of the contamination level within the room. Operation during normal operating hours will usually be sufficient. Of prime importance is the education of the worker on the

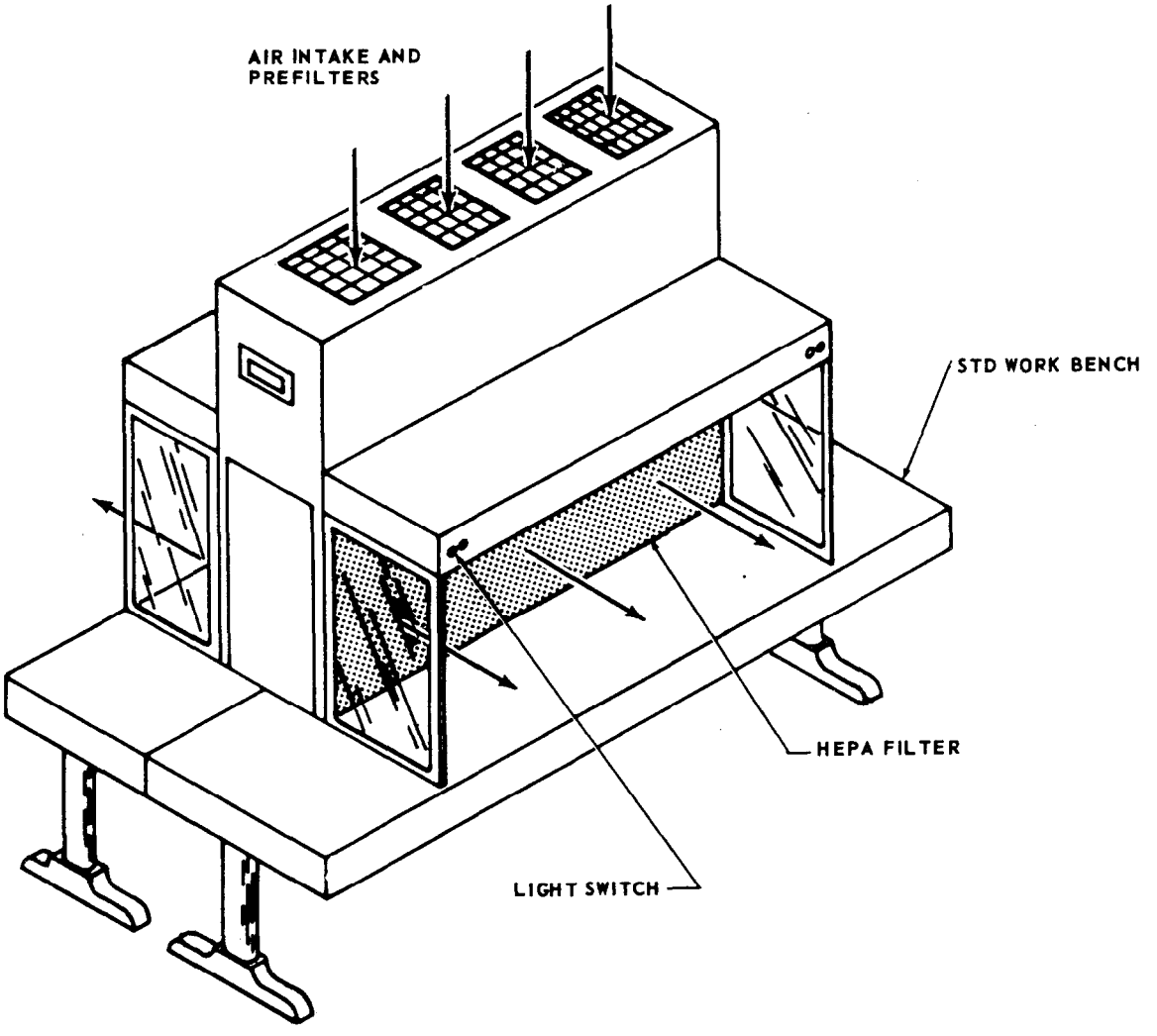

Figure 7-5. Dual Laminar Flow Devices

possible sources of contamination and the techniques for its control. Proper personnel operating techniques are required to control contaminants that are carried into the bench on hands, tools, fixtures, etc. This is even more critical for benches located in uncontrolled areas because there is greater susceptibility of all items transported in and out of the work station to carry more contamination.

b. Evaluation of the Work Area. Although some clean work stations are designated to operate in uncontrolled areas, the immediate area around the bench should be surveyed to determine if heavy particles are being generated above the bench. Heavy particles may penetrate the air stream or follow the workers arms into the clean work station and degrade its effectiveness. The top of the bench should extend to or beyond the edge of the bench to protect the working area from sources that produce heavy fallout. The work area will also be checked for any operations producing high velocity particles which could penetrate the air stream and get into the clean work area. Such conditions will be avoided or corrected.

c. Station Control. If a protective screen is provided in front of the filters, it should be cleaned to remove any captured particles before work begins. A vacuum device with a plastic intake nozzle is recommended for this cleaning. All sensitive material must be removed from the station or properly covered during this

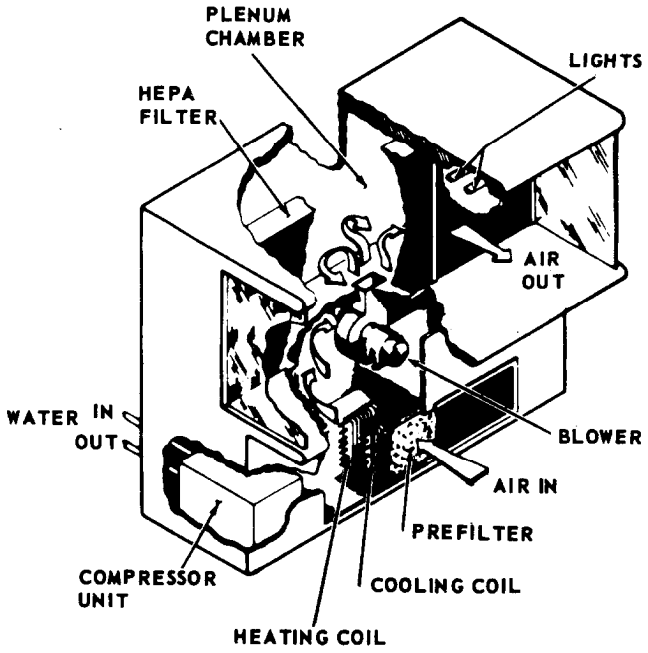

Figure 7-6. Air Conditioned Clean Workbench

operation. After the screen has been cleaned and the air supply is operating, the work surface shall be wiped thoroughly with approved materials at least once per shift. More frequent wiping may be required if such material is carried in and out of the station.

d. Work Piece and Equipment Control. It should be recognized that, although the atmosphere inside the work station is clean, the air around the work station may be heavily contaminated. Care must be taken to prevent this contamination from reaching critical work parts.

(1) All critical operations will be accomplished within the confines of the clean work stations (particularly reverse flow benches).

(2) At no time will there be any work accomplished within the clean work station without the bench being operational.

(3) All material (work pieces, tools, containers, jigs, etc) shall be cleaned to remove particulate matter before being placed inside the clean work station.

(4) In bench type work devices, the bench section will be kept as free as possible of any material not being used immediately. Any material that must be kept inside the station will be stored along the sides of the work station. Nothing is to be placed along the back edge of the workbench nor between the work piece and the filters. Positioning of objects between the filter and work piece will disturb the laminar air flow pattern and may contribute particulate matter to the air flow.

(5) Papers and paper products are not allowed inside a clean workbench with the exception of a reverse flow bench (figure 7-3).

(6) Lead pencils are not allowed inside the clean work station.

(7) Nothing will be placed or stored on the top or canopy of a bench type clean work station. In work benches where eye hazardous solvents or chemicals are being used, eye wash bottles may be stored on the top of the workbench canopy in the front and center part. When such objects are removed, particles large enough to penetrate the air stream would be brushed off the top of the cabinet or the bottom of these objects.

(8) The clean work station must be turned on at least 10 minutes before any shop operation is accomplished within its confines.

(9) Additional cleaning will be necessary to keep the working surfaces of the clean work station, work pieces, tools, etc. free of particulate contamination if they are unprotected when the bench is turned off.

e. Personnel controls. Personnel requirements shall be in accordance with paragraph 8-1. Proper personnel operating techniques are required to control the transfer of contamination into the clean work station on hands, tools, fixtures, etc. Workers must be educated on the possible sources of contamination and the techniques for its control. Care will be taken to assure that hands, forearms, etc., are clean and free of loose dirt and lint before placing them inside the clean work station. Smocks or frocks with snug fitting wristbands are recommended when laminar flow clean work stations are used outside of the clean room confines. Gloves, finger cots, or other hand coverings will be used when added control is necessary due to close proximity or direct contact with critical parts. Clean finger cots or gloves used to handle parts must not be used to handle material outside the clean workbench and then returned to the station to handle the part. Care must also be taken not to use the finger cots to rub face or hair. If close inspection of the work piece is required where the worker must lean over the part, a properly worn head covering is essential.

f. Operational techniques and procedures.

(1) Clean parts shall be placed in the unobstructed clean air flow from the filters. Work on the critical part will be performed with the hands downstream from the part itself as much as possible.

(2) Clean parts transported in protective containers are to be removed from containers only inside the bench or in the unobstructed airstream directly outside of the station. Containers are to be kept inside the clean work station or in the unobstructed airstream directly outside of the station until the part is replaced and the container re-closed. Containers may be removed and stored elsewhere if precautions are taken to maintain their cleanliness.

(3) Clean parts containers are to be placed to one side and downstream from the work piece.

(4) Parts containers carry a certain amount of contamination which can be transferred to horizontal surfaces in the clean work station. Critical parts are not to be placed on the same surfaces on which parts containers are placed.

(5) To eliminate the problem of carrying contamination onto horizontal surfaces of the bench by parts containers, a small shelf may be located downstream of the work piece.

(6) Another solution for keeping the critical parts away from the contamination on horizontal work surfaces is to use a jig, fixture, or work stand on which to place the parts. This will keep the part in the clean airstream.

(7) Storage for tools not in use will be provided. A separate tray or wire mesh container is recommended.

(8) Objects brought into the clean workbench from the outside carry a shadow of contaminated air behind them into the devices. Care must be taken that critical parts are not exposed to this contamination.

(9) The transfer of material, including the worker's hands, in and out of the bench section, is to be kept at a minimum.

(10) Transfer of contaminants directly to the part from hands or misused finger cots due to poor technique may be many times greater than that resulting from airborne contamination.

(11) The working area and all surfaces shall be kept clean and orderly.

g. Special considerations.

(1) Laminar flow devices will offer a high degree of flexibility to operations which must be performed in locations where a standard clean room is neither available or practical. In such locations it will be realized that the ambient contamination level of the room will be very high in comparison to the environment within the laminar flow device. Therefore, any work performed within this device outside of clean room confines will be opened, worked upon, and sealed within this device. Failure to follow such a procedure will result in contamination of the work.

(2) Laminar flow devices operate on the principle of removing contamination from the work space as soon as it is generated. It accomplishes this by 100 feet per minute velocity (a little more than 1 mile an hour) exiting from superinterception filters. If a clean workbench with an open front is placed in the outdoors in a wind condition of 50 feet per minute or more, windborne contamination will be forced into the device, defeating the design purpose. Therefore, unless a temporary effective wind shelter is provided for the laminar flow device, it will not be able to control airborne contaminants.

7-4. MAINTENANCE.

a. General. The use of proper techniques for operating and maintaining the clean work station is necessary to obtain maximum benefits. These procedures, which include initial checkout, clean operation, and proper maintenance, should be understood by all personnel concerned with its operation. Of prime importance are inspections to determine that the HEPA filters are properly sealed and the air velocity meets the requirements of table 3-1.

b. Air velocity inspection. The air velocity across the work area will be checked periodically to determine that the proper air flow is being maintained across the filter face (see paragraph 7-5). If air flow is below 75 FPM or extremely uneven (25 FPM variation), check blowers and/or filters to determine the cause of the trouble. Extremely high localized readings indicate leaks.

c. Filter inspection. The filters can be inspected for leaks by measuring the particle contamination level of the air passing through the filters (see paragraph 7-5). A few pinhole leaks will contritube a high percentage of contamination to the work station. If a leak is detected, determine by closer inspection if leak is coming around the filter (indicating a poor seal) or if leak is in the filter itself (indicating a ruptured filter). Replace filter or tighten pressure on seal as necessary.

d. Filter replacement. When the air velocity across the work area in the bench falls below an average of 90 ft per minute or below 75 ft per minute at any point, the prefilters should be inspected prior to changing the HEPA filters. The prefilter will accumulate dirt faster than the HEPA filters and in most cases changing or cleaning the prefilter will bring the outlet air velocity to an average of 90 ft per minute or greater. HEPA filters will only be changed when damaged or when air velocity remains below an average of 90 ft per minute or below 75 ft per minute at any point after new prefilters have been installed and the HEPA filters have been cleaned on the upstream side. Inspection of the prefilters approximately once every two months is recommended, but this interval may vary as determined by local management.

(1) When replacing HEPA filters, it is important that care be taken to assure that the filters are properly sealed in the supporting frames and are not passing contaminated air.

(2) After a HEPA filter is replaced, it shall be inspected by the environmental officer as specified in 2-5b(2).

7-5. MONITORING.

The clean room officer shall monitor all laminar flow clean work stations at least once every six months for the particle count, air velocity, and other environmental conditions as specified in table 3-1 (see 2-5b). Detailed monitoring procedures are described in Section IX. Certification/decertification shall be in accordance with paragraph 2-6.

SECTION VIII

GENERAL PRACTICES WITHIN ENVIRONMENTALLY CONTROLLED FACILITIES

8-1. PERSONNEL REQUIREMENTS.

a. General practices. When operating any type of environmentally controlled facility, the greatest source of particulate contamination comes directly from the personnel within the area as well as that contributed by personnel procedures involving various clean room paraphernalia. All personnel associated with the operation should be thoroughly indoctrinated in the purpose and practices of clean room operations. The objective is to obtain maximum cooperation and self-discipline on the part of each individual in following the prescribed procedures. All the elaborate equipment installed to provide a microscopically clean or controlled atmosphere will be to no avail if the working personnel do not cooperate to maintain these conditions. Environmentally controlled facilities are restricted areas and access shall be limited to authorized personnel. All personnel entering environmentally controlled areas shall use prescribed clean room garments at all times.

VISITORS TO THE CLEAN ROOM MUST OBSERVE ALL THE RULES WHICH THE CLEAN ROOM EMPLOYEES ARE FORCED TO OBSERVE. THIS INCLUDES TOP MANAGEMENT AS WELL AS SUPERVISORS.

The implemention and enforcement of the general practices described in this section shall be the responsibility of local management.

b. Personnel practices. Personnel with skin or upper respiratory diseases (as determined by the Base Medical Officer) shall not be allowed to work in environmentally controlled areas. Examples of physiological problems that are detrimental to clean atmospheres are as follows:

(1) Allergies to synthetic fabric.

(2) Allergies to solvents or other cleaning materials being used.

(3) Profuse nasal discharge.

(4) Skin conditions which result in above-normal skin shedding, dandruff or skin flaking.

(5) High amounts of acid found in the moisture of the hands.

(6) Severe nervous conditions, itching, scratching or claustrophobia.

(7) Emphysema.

c. Personal hygiene. All personnel will receive periodic indoctrination and review on the importance of personal hygiene in the operation of environmentally controlled facilities. Personnel with colds, temporary sneezing and coughing, and severe sunburns will be assigned to temporary jobs outside the environmentally controlled facilities until they have recovered. The high degree of cleanliness required necessitates the development of the following habits:

(1) Bathe frequently.

(2) Shampoo hair weekly or more often if necessary and take action to control dandruff.

(3) Wear clean under and outer garments.

(4) Keep hands, fingernails and face clean.

(5) Male personnel are to shave daily.

(6) Mustaches should be neatly trimmed and sideburns should not extend below the ear lobe. The condition shall be determined by and be the responsibility of local management.

d. Personnel disciplines. Supervisor and employee disciplines determine the quality of products processed in environmentally controlled areas. All employees will develop and practice good clean room habits to assist in the successful operation of environmentally controlled facilities. The following disciplines are mandatory within all classes of environmentally controlled areas defined by this Technical Order, except those marked with an asterisk (*) apply only to class 100,000 or better clean rooms.

(1) Always wear the prescribed protective clothing in the specified manner.

(2) Prescribed protective clothing shall be worn only within the specified clean environmentally controlled areas, and not outside the clean areas nor in the contaminated section of change rooms.

(3) Wear finger cots or gloves if required. Gloves shall be worn at all times if hands are severely chapped or if fingernail polish is worn.

(4) Do not wear soiled, dirty or lint-producing street clothes within environmentally controlled areas.

(5) Avoid scratching or rubbing of head or exposed skin areas.

(6) Never comb or brush hair within environmentally controlled areas.

(7) Do not wear or apply cosmetics within the clean areas (except lipstick may be worn).

(8) No eating, drinking (except water), chewing or smoking shall be allowed in environmentally controlled areas.

(9) Personal items such as combs, cigarettes, matches, tissues and similar particle-shedding products shall not be carried into class 100,000 or better clean rooms. Such items may be carried into controlled areas in street clothes pockets, provided they are not removed from the pockets within the clean area.

*(10) Do not wear jewelry (except plain wedding bands, watches and pierced ear studs).

*(11) Hair shall be confined under a cap hood or snood. Exposure of the tuft of hair on the back of the neck which cannot be covered by a head piece (when properly worn) is acceptable. However, hair that is not covered on the front of the head at the foreline is not acceptable. If difficulty is encountered, a combination cap, hood or snood may be used.

*(12) All mustaches (except those that are neat and trim, and not bushy or past the edge of one's mouth) must be covered or removed.

*(13) Personnel having sideburns below the ear lobe or beards will be required to wear a cover of some type; either face mask or hood with eye opening.

(14) Report adverse changes in environmental conditions (particle generation or accumulation, marked changes in humidity or temperature) and/or changes in physical condition (profuse nasal discharge, skin conditions, etc) to the supervisor.

e. Operation disciplines. Supervisors will enforce good housekeeping practices and the following disciplines to assist in the successful operation of environmentally controlled facilities:

(1) Do not walk around unnecessarily and be cautious in approaching another work area. Personnel movement is to be restricted to minimize the stirring up of settled particulate matter.

(2) At no time will paper in any form be torn or mutilated within an environmentally controlled area. Paper materials of any type will not be allowed in class 100,000 or better clean rooms unless approved by the clean room officer.

(3) Pencils and erasers shall not be used within environmentally controlled are as. Ball point pens are approved for writing purposes (non-retractable and without pocket clips only for class 100,000 or better clean rooms).

(4) Do not use pass-through boxes for communications.

(5) Do not leave doors open.

(6) Maintain air locks in proper operating condition. Do not bypass or disconnect the door interlock system.

(7) Keep parts and tools at the work station as clean and orderly as possible. Use provided tool racks where possible.

(8) Any work or tools dropped on the floor shall be considered contaminated.

(9) Never leave exposed critical parts on the workbench.

(10) Work on a clean surface - never on cloth or paper towels which can transfer contaminants to the work piece.

(11) Excess storage in environmentally controlled areas will not be permitted.

(12) Operations such as lapping, filing, deburring, and heavy soldering are prohibited in environmentally controlled areas unless all contamination is isolated and exhausted from the clean areas. Exhausting for some operations may be accomplished through the central vacuum system.

f. Personnel training and attitudes. It is imperative that all personnel associated with the operation of environmentally controlled areas, including supervisors, technicians and maintenance personnel, receive a thorough indoctrination in the purpose and practices of clean room operation. Employee's attitudes are of prime importance. They must be prepared to meet the challenges of clean room work before they are allowed to work in environmentally controlled areas. They are to be instructed to consider everything except their immediate work area as being contaminated, and they are to be taught to recognize contamination and the common generators of contamination. Local training programs shall be developed by local management. The following outline may be helpful;

(1) Indoctrination

(a) Define contamination and other clean room terms as necessary (see paragraph 1-7).

(b) Discuss how to recognize contamination and the common generators of contamination.

(c) Discuss effects of airborne contamination.

(d) Discuss how contamination is transferred.

(e) Discuss human induced contamination and its importance.

(f) Discuss how contamination is controlled within environmentally controlled areas.

(2) Types of environmentally controlled areas.

(a) Controlled area (Section IV).,

(b) Conventional clean room (Section V).

(c) Laminar flow clean rooms (Section VI).

(d) Laminar flow clean work stations (Section VII).

(3) Requirements for working in environmentally controlled areas.

(a) Discuss personnel requirements (paragraph 8-1a through paragraph 8-1e).

(b) Discuss the role of the clean room worker.

(c) Discuss procedures for entering clean rooms.

(d) Discuss procedures for exiting clean rooms.

(e) Discuss the care and proper wearing of clean room garments.

(f) Discuss do's and don'ts within the clean room.

(g) Discuss importance of housekeeping and other cleaning methods.

(h) Discuss the flow of personnel, parts, tools and other related equipment in and out of environmentally controlled areas.

(i) Discuss material handling within environmentally controlled areas.

(4) Miscellaneous procedures.

(a) Cleaning practices (paragraph 8-2).

(b) Clean room garments (paragraph 8-3).

(c) Special equipment - shoe cleaners, tacky mats, etc.

(d) Packaging of clean parts.

(e) Special work procedures as required.

8-2. CLEANING PRACTICES.

a. General. MIL-HDBK-406, "Cleaning Materials for Precision Precleaning and use in Clean Rooms and Clean Work Stations" and MIL-HDBK-407, "Precision Cleaning Methods and Procedures" will be helpful in determining clean materials and/or procedures when specific instructions are not given in the end item technical order.

b. Tools and hardware. Various tools and other hardware items used in processing critical components require special cleaning techniques to maintain their cleanliness. Various solvents are used in cleaning tools, parts and equipment. To be effective a final rinse solution must be constantly filtered to insure that particulates do not remain on the items after they are immersed in the initial solution. Cleaning tanks should be covered when not in use to prevent airborne dust from falling into the solution.

WARNING

- Provide adequate ventilation when using Trichlorotrifluoroethane (Freon TF). Avoid prolonged breathing of vapors and minimize skin contact.
- 1,1,1 Trichloroethane (O-T-620) is toxic to skin, eyes, and respiratory tract. Skin and eye protection required. Avoid repeated or prolonged contact. Good general ventilation is normally adequate.

c. Workbench surfaces, Working areas shall be cleaned periodically to insure that, all particulates are removed. Filtered solvents and a clean lint free cloth shall be used to wipe working surfaces. Fold the dirty side to the inside for repeated wiping. Cleaning Compound, Solvent, Trichlorotrifluoroethane per MIL-C-81302, 1,1,1-Trichloroethane, Technical, Inhibited (Methyl Chloroform) per O-T-620, or their equivalent may he used to clean the working surfaces.

d. Wiping cloth. Only approved materials shall be used to wipe working surfaces. These materials shall be limited linting type and should be evaluated and approved by the clean room officer. There are no standard test procedures, but a limited linting test similar to that specified for garments may be used in some cases. In other cases the clean room officer may be able to determine the acceptability of the material by using MIL-HDBK-406 as a guide.

8-3. GARMENTS.

a. Specifications. Garments required to be worn in environmentally controlled facilities shall be functional and job oriented. They should be made of woven polyster fabrics and designed to minimize contamination from the garment. All uniforms shall form barriers between the human contaminator and his work. All apparel shall be designed with a minimum of seams, no pockets, pleats, raw edges or dust collection features. Seams shall be double stitched with continuous filament polyester thread. General type garments are coveralls, smocks, frocks, hoods, snoods, caps, shoe covers, boots, gloves and wiping cloths. All new garments purchased shall meet the requirements of this technical order. A sample of all new garments purchased shall be submitted to the clean room officer for tests to insure that requirements are met before acceptance. The clean room officer shall determine the sample size. All garments shall be permanently marked by the manufacturers as follows:

(1) Manufacturers name

(2) Date of manufacture

(3) Materials

(4) Size (small, medium, large)

b. Garment changes. The following change criteria are recommended.

(1) Class 300,000 Room (uniforms not required). If smocks, frocks, shirts, caps or snoods are used, they shall be changed once per week.

(2) Class 100,000 Room - One change every five days.

(3) Class 10,000 Room - One change every three days.

(4) Class 1,000 Room - One change every three days.

(5) Class 100 devices - One change every day.

c. The following applies for all class clean rooms:

(1) If a garment becomes soiled at any time while performing clean room duties, it shall be changed immediately (determined by clean room management).

(2) During inactive periods all garments shall be stored in facilities consistent with the class of cleanliness.

(3) Soiled garments shall be placed in containers to eliminate damage and abuse.

(4) Damaged garments shall be placed in separate containers. Subsequent inspection shall be made to determine if repair or disposal is required.

d. Clothing cleanliness requirements. Frequent laundering of clean room garments is required to minimize the spread of contamination. The clean room officer will be responsible to insure that 'clean room garments are clean, and meet limited linting requirements after washing. Sampling and monitoring procedures shall be used as described in paragraph 8-3f. Facilities for washing clean room garments shall meet the following criteria:

(1) The facility shall not exceed particle contamination requirements for a class 100,000 clean room (see table 3-1). A contamination check of the facility shall be made utilizing an automatic light scattering particle counter as specified in Section IX. Pressure and temperature controls are not required.

(2) All cleaning, washing, drying and packaging shall be accomplished with the clean environment.

(3) The washing and rinsing fluids shall be filtered with 5.0 micron or better filters.

(4) The water shall have not more than 18 ppm hardness.

(5) Steps may be taken to eliminate static electricity on garments if static is a problem as determined on a local basis. If static electricity is a problem, garments having a surface resistivity approaching 11.0 log R units (log of resistivity per square unit of surface) can be obtained by adding anti-static agents.

(6) Repairs to all garments will be made outside the clean room and prior to laundering. Repairs must be made to secure fraying.

(7) Spot and stain removing will be accomplished outside the clean room prior to laundering.

(8) Inorganic sequesterants and suitable detergents shall be used.

(9) After laundering, a final inspection will be individually made of garments for damage, loose fibers, or lint bearing seams. These garments will be separated for repair or disposal.

e. Packaging of garments. After cleaning, the laundry shall package and deliver all clean 'room garments in numbered lots which can be traced to a known wash load. The size of the lot should be carefully chosen since the entire lot may be rejected and returned to the laundry for reprocessing. Specific packaging shall be as follows:

(1) All clean room garments and accessories shall be hermetically sealed in clean polyethylene bags having two mil minimum thickness.

(2) Each garment will be packaged individually except shoe covers may be packaged in pairs.

(3) Each apparel package shall be marked as to size S-M-L, or packed such that garment size marking is clearly visible.

(4) Wiping cloths shall be packaged in multiples of 10 per package.

f. Monitoring and quality control. Based upon the laundry procedures described in 8-3e, the clean room officer shall determine a sample size and monitor garments to insure that they meet specifications. A garment exhibits proper cleanliness and limited linting properties if it has less than 2,000 particles per square foot 5.0 micron and larger. Sampling will be performed in accordance with MIL-STD-105, Level II, using a 10% AQL for a given lot. Any one lot which does not meet the acceptance criteria of the sampling plan will result in rejection of all garments in the log. Garments will be monitored using one of the procedures described in Section IX.

NOTE

If the particle count of a garment exceeds the allowable limit, tests may be made to determine if the garment is at fault or if it has been laundered improperly. This test should be as quick and simple as possible, Microscopy and/or microchemical methods may be employed. If the garment itself is faulty and is shedding its fabric, it should be discarded. If it has been improperly laundered, other garments from the same wash are also likely to be unacceptable and the entire lot from that wash should be rejected and returned to the laundry.

SECTION IX

MONITORING PRACTICES

9-1. INTRODUCTION.

a. Monitoring of a clean room can present many problems if those performing the monitoring lack an understanding of the factors influencing the clean room environment. These factors must be considered in order to properly interpret the monitoring data. This section presents or references some of the more detailed procedures for monitoring environmental conditions and other procedures as follows:

9-2. PARTICULATE MONITORING - AUTOMATIC

9-3. PARTICULATE MONITORING - MANUAL

9-4. TEMPERATURE MONITORING

9-5. HUMIDITY MONITORING

9-6. PRESSURE/AIR FLOW MONITORING

9-7. GARMENT MONITORING

9-8. OTHER PROCEDURES

b. The clean room officer, with responsibilities defined in paragraph 2-5b, shall monitor all environmentally controlled facilities, as defined by this technical order, to determine if they meet specified standards.

9-2. PARTICULATE MONITORING - AUTOMATIC.

a. Particulate monitoring for the purpose of certification/decertification of the clean rooms shall be accomplished with an automatic particle counter whose calibration is performed in accordance with TO 00-20-14 or manufacturer's specifications. Automatic counters are presently manufactured in two basic types. One system uses light scattering devices to count dust entrapped in an air stream that is bombarded by intense lights and the other uses automated counting of air samples taken by filter techniques. These counters are the best tools available for rapid counting and sizing of particles. In general, they are effective in the range of 0.3 to 5.0 micron size particles. The automatic light scattering particle counters are the preferred type for use in the Air Force.

b. The automatic method is the only approved method for counting particles smaller than 5.0 micron. This means that automatic particle counters are required for all class 100,000 or cleaner facilities. Since there are many models available on the market, the manufacturer's instructions should be followed in using the instrument.

c. The following comments apply to all particulate monitoring procedures.

(1) Contamination levels will vary throughout a clean room.

(2) The highest level of contamination is not necessarily at the air exhaust area since air from a highly contaminated area may be diluted with cleaner air prior to exiting the room.

(3) The areas that are of most concern are those immediately surrounding the work area.

(4) It would be almost impossible to monitor all work areas continously. The levels of contamination can he determined by statistically sampling the room. The exact procedure for sample monitoring can be determined locally.

9-3. PARTICULATE MONITORING - MANUAL.

The manual method of particulate monitoring for the purpose of certification/decertification is approved only for controlled areas (Class 300,000) where particles with a measurable length of 5.0 micron and larger are to be counted. The manual method is abstracted from ASTM F25-63T and is presented in Appendix I.

9-4. TEMPERATURE MONITORING.

a. Temperature monitoring for the purpose of certification/decertification may be achieved by using a standard mercury-filled thermometer or a similar portable measuring device. More automated devices may be used to supplement or replace the thermometer, but these devices should be checked periodically to assure accuracy.

b. Temperature readings will also be made by the shop quality control personnel with records kept for the environmental officer's monthly examination. Frequency of readings will be determined locally. If the product being worked upon is extremely sensitive to temperature, it may be necessary to monitor with a continuous temperature recorder. In such cases the temperature probe shall be placed in close proximity to the product.

c. The following comments apply to all temperature monitoring procedures:

(1) The temperature will vary from point to point throughout a conventional clean room, particularly at different elevations. Temperature variations are practically non-existent in laminar flow rooms.

(2) The temperature at the three to five foot elevation and the are a surrounding the work is of prime importance and must be maintained within established limits.

(3) No readings should be taken within two feet of a heat producing unit.

9-5. HUMIDITY MONITORING. Humidity monitoring for the purpose of certification/decertification may be achieved by using conventional wet and dry bulb thermometers. If automated devices are used, they should be periodically calibrated with a wet and dry bulb thermometer. Humidity readings will also be made by shop quality control personnel with records kept for the clean room officer's monthly examination. Frequency of readings will be determined locally.

9-6. 9-6. PRESSURE/AIR FLOW MONITORING.

a. Pressure monitoring. Pressure monitoring may he achieved by using a "U" - tube manometer with each opening vented in such a manner that the pressure differential is measured between the clean room and its outside surroundings. The instrument shall be capable of reading 0.01 inches of water pressure clearly. A gage that indicates pressure differential in increments of 0.01 inches of water may be substituted for the manometer. Failure of a room to meet minimum pressure specifications shall not in itself be cause for decertification. It indicates a potential problem and the cause should be investigated to determine if corrective action is necessary.

b. Air flow monitoring. The air velocity in laminar flow rooms and laminar flow clean work stations shall be measured with an air velocity meter. The meter should be small and easily handled with approximate velocity ranges of 30-300 and 100-1000 feet per minute. The meter shall be used in accordance with the manufacturer's instruction.

9-7. GARMENT MONITORING.

a. General. Garment monitoring shall be used to determine if the garment has been laundered properly or if the garment is faulty and shedding its fabric (see paragraph 8-3f). A garment is acceptable if it exhibits limited linting properties of not more than 2000 particles per square foot 5.0 micron and larger in size.

b. Manual procedure. The detailed manual procedure for monitoring clean room garments is presented in Appendix II.

c. Automatic procedure. Faster and better results will be obtained by using automatic light scattering particle counters to measure particulate contamination on clean room garments. Monitoring will be accomplished in a laminar flow work station or equivalent. The filter assembly and adapter pictured in figure 2A-1 of Appendix II is fitted to the air intake of an automatic counter with a short length of tygon tubing. The flow rate will be set as determined by the operator and recorded for calculation purposes. The garment areas to be tested will be selected as illustrated in figure 2A-3 of Appendix II. The area to be tested is placed in the assembly while the automatic counter is operating, The sampling time for each area should be determined by the operator for the best combination of accuracy and speed. At least one minute should be allowed for each area. Close observation will acquaint the operator with the sampling time in which more than 95 percent of the total count is recorded. The results must be computed using appropriate factors and expressed as particles per square foot of garment.

NOTE

If the particle count of a garment exceeds the allowable limit using either of the above procedures, tests will be made to determine if the garment is at fault or if it has been laundered improperly. This test should be as quick and simple as possible. Microscopy and/or microchemical methods may be used. If the garment itself is faulty and is shedding its fabric, it should be discarded. If it has been improperly laundered, other garments from the same wash are also likely to be unacceptable and the entire lot from that wash should be rejected and returned to the laundry.

9-8. OTHER PROCEDURES.

a. General. It is often desirable to test or monitor various materials to determine their shedding properties before they are approved for clean room use. There are no standard procedures for general use, but a suggested test for clean room paper is presented in paragraph 9-8b. Similar procedures for other materials may be developed by the Physical Sciences Laboratory for local use.

b. Paper test. The following test procedure is suggested to evaluate paper for use in clean rooms.

(1) Equipment: Standard abrasion tester, Model 503, manufactured by Taber Instrument Corporation, or equivalent.

(2) The instrument shall be set up as follows:

Load: 250 grams

Vacuum: 50

Cycles: 600

Wheel: Type CS-10

(3) Both sides of the paper should be analyzed since one side usually has higher shedding properties than the reverse side.

(4) Results should be expressed in percent weight loss.

(5) If the weight loss exceeds 0.24 percent, the paper should not be approved for clean room use.

9-9. TROUBLESHOOTING CLEAN ROOMS.

The following procedure is suggested:

a. Check contamination level of incoming air and the number of air exchanges per unit of time. This will reveal problems related directly to air filtration.

b. Determine the air pattern within the problem area, as there could be poor circulation within this particular area. The problem could be upstream of the sample area. To determine the exact location, dust counts must be taken until problem area is pinpointed.

c. To determine the location or reason for a dust problem within an environmentally controlled area, certain steps should be taken.

(1) Check the equipment to insure that its location is not disrupting the flow.

(2) Insure the equipment interior as well as the exterior is clean, as many test consoles have fans to keep tubes and resistors at a certain temperature.

(3) Work area should be checked to insure that bench area is clean as well as area around it.

(4) If storage area is within air pattern, all end items should be checked for cleanliness.

(5) Check for personnel loading within the clean room. (All standard clean rooms have a saturation point based on the air flow and number of air changes per hour).

(6) Determine the end item flow and personnel flow within the area.

(7) Individuals within the area should be checked for personal hygiene as well as work habits.

(8) Look for localized areas of high contamination such as open soldering or other unvented fumes.

(9) Evaluate the housekeeping procedures.

(10) Check prefilters for overloading. Clean or replace.

(11) Check HEPA filter system for damaged or improperly sealed filters.

(12) If possible, air supply ducts should be checked for leaks or separation in duct work.

(13) Evaluate the shop layout to insure that air flow is not being obstructed by large consoles, test equipment, etc.

APPENDIX I

MANUAL METHOD FOR SIZING AND COUNTING AIRBORNE PARTICULATE CONTAMINATION IN CLEAN ROOMS AND OTHER DUST-CONTROLLED AREAS*

1A-1 SCOPE. This method covers a procedure for counting and sizing airborne particulate matter 5.0 microns and larger. The sampling areas are specifically those with contamination levels typical of clean rooms and dust-controlled areas designed for electronic and aerospace work. It is not a method for dust counting where iso-kinetic sampling is a factor.

1A-2. OUTLINE OF METHOD. The method is based on the microscopic examination of particles impinged upon a membrane filter with the aid of a vacuum. The number of sampling points is proportional to the floor area of the enclosure to be checked. The apparatus and facilities required are typical of a laboratory for the study of micro-particle contamination. The operator must have adequate basic training in microscopy and the techniques of particle sizing and counting.

1A-3. DEFINITIONS.

a. The major projected dimension of a particle is designated as the particle size.

b. The standard unit of length for sizing purposes is the micron (u), which is 0.001 mm or 0.00004 IN.

c. Only particles with a measurable length greater than 5u are to be counted.

d. A fiber is considered a particle, no distinction being made with respect to length/width ratios.

*Abstracted from Proposed Tentative method for Sizing and Counting Airborne Particulate Contamination in Clean Rooms and Other Dust-Controlled Areas, F25-63T Method.

1A-4. APPARATUS.

a. Aerosol open type filter holder.

b. Vacuum pump or aspirator capable of producing a vacuum of 500 torr (500 mm-Hg).

c. Flowmeter with 10 liters per min capacity or 10 liters per min orifice.

d. Membrane filters, contrasting, 0.80u or smaller pore size, with imprinted grid.

e. Glass microscope slides, 50 x 75 mm, or 47 mm plastic disposable Petri dishes.

f. Forceps with unserrated tips.

Binocular microscope with ocular-objective combinations to obtain 40/45 X and 90/150 X magnifications. Latter objective shall have numerical aperture of 0.15 mm.

h. Manual counter (2 gang).

i. Microscope lamp.

j. Micrometer eyepiece with movable scale or ocular micrometer reticle.

k. Stage micrometer, standard 0.01 to 0.1 mm scale.

1A-5. SAMPLING.

a. The sample shall be collected by impinging airborne particles on a membrane filter which has a known effective filtering area. The filter surface is to be vertical (filter holder horizontal) with respect to the floor.

b. Standard sample for this procedure shall be 10 ft^3 (283 liters). However, the sample size may be adjusted for specific conditions. (See paragraph 4A-7f(4).)

c. Sample shall be taken at waist level (36 to 40 IN. from the floor) or at bench level unless area is limited. General sampling points are as designated on the sampling plan in figure 1A-1. The number of samples for averaging is a function of the floor area of the space being sampled. (See paragraph 1A-5d.)

d. Samples can be taken at the respective locations illustrated on the sampling plan in figure 1A-1. (Also see paragraph 1A-5f.) Sample at 1 for areas of cabinet size. Sample at 1' and 2' for areas less than 150 ft^2. Sample at 1, 2, 3, 4 and 5 for areas to 1000 ft^2. For areas larger than 1000 ft^2 increase sampling by 4 locations per 1000 ft^2. If desired, for an average room dust count, a single sample may be taken for 5-1/2 min at each of the 5 designated sampling points.

e. Locations are approximate. Location 1 is area center, 1' and 2' are centers of triangles on respective bases. Locations 2, 3, 4 and 5 are half distances from center to respective corners on area diagonals, as shown in sampling plan.

f. Operating conditions should dictate number and location of samples. Each critical work position within a clean room should be monitored. Past experience has shown that these work positions should be checked daily, or more often, and during periods of most activity.

1A-6. PREPARATION OF APPARATUS.

a. Prior to sampling, dirt and dust are to be removed from the filter holder by washing in a free-rinsing detergent, ketone-free isopropyl alcohol and reagent grade petroleum ether (30-60°C boiling range).

b. The laboratory equipment and area used for counting and sizing the airborne

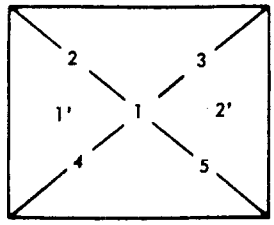

SAMPLE AT 1' AND 2' FOR AREAS LESS THAN 150 FT^2 LARGER AREAS TO 1000 FT^2 USE 1, 2, 3, 4 & 5 AVERAGE READINGS.

Figure 1A-1. Clean Room Sampling Plan

particulate are to be maintained in a condition of cleanliness paralleling or superior to the area sampled.

c. Personnel performing sizing and counting operations are to be equipped with garments consistent with good practice.

d. Microscope slides and Petri dishes are to be cleaned and prepared before samples are taken. Lens tissue or rinsing with .3 micron cleaning fluids is satisfactory for this purpose.

e. Hazardous chemicals employed in the method are to be handled with recognized precautions.

f. A background count will be made of each membrane filter which is to be used in the certification of a clean room facility. Examination at 40 - 50X through bench or stereo microscope will reveal low or high background count.

g. For routine work, an average background count may be used by counting 4 filters per box of 100. However, if the background count approximates 10%, or greater, of the sample count, each individual filter should have a background count established. * This background count should be subtracted from the sample count.

*If the background count is estimated to be greater than 10 percent of the total count from a 10 ft^3 specimen, a larger sample (15 or 20 ft^3 volume) may be used.

h. Acceptable filters shall be placed in clean and identified Petri dishes for test use and covered.

1A-7. PROCEDURE.

a. With aid of laboratory pressure rubber or plastic tubing, connect the filter holder to the vacuum train which includes the filter holder, 10 liters per min limiting orifice or (and) 10 liters per min, flowmeter and source of vacuum (vented outside sampling area). *

b. With clean unserrated forceps, carefully remove membrane filter from Petri dish and place, with grid side up, on screen support of filter holder. Twist locking ring in place to secure filter.

c. When in the sampling area, place the filter holder in a horizontal position, filter surface vertical, 36 to 40 IN. from floor level for purposes of sampling. Apply vacuum and adjust to flow of 10 liters per min or other desired flow. A standard vacuum gauge will not suffice for maintaining correct flow. Either a rotometer (flow meter) or limiting orifice with manometer is required. When using the orifice, no adjustment is necessary. However, the pump should be checked with the manometer to assure its ability to maintain a vacuum of 500 torr or better while sampling.

d. The filter should be removed from the holder with forceps and placed on a clean glass slide in preparation for counting. If the filter cannot be counted immediately, it should be placed in a clean Petri dish for transport to the microscope counting area.

e. Microscopic Analysis Procedure:

(1) Place the ocular micrometer in one eyepiece. Using a stage micrometer, calibrate the measuring eyepiece (ocular micrometer) for each magnification.

*For low contaminated areas, a flowmeter with a one CFM capacity may prove more satisfactory for taking a larger sample in less time.

(2) Place the microscope slide or Petri dish containing the specimen under the microscope. The Petri dish cover must be removed.

(3) Adjust the microscope lamp intensity and direct it on the specimen from an oblique position to obtain maximum definition for sizing and counting. High intensity illumination is a critical requirement. The angle of the light beam is very significant for defining different types of contamination.

(4) Knowing the subdivisions of the stage micrometer, the divisions of the measuring eyepiece may be sized from it.

(5) A magnification of approximately 100X will be required for counting particles 5.0 microns and larger. Greater magnification may be advantageous for identification of particles.

(6) Particles are to be counted and tabulated in three size ranges:

All particles between 5 - 15 microns
All particles between 15 - 25 microns
All particles greater than 25 microns
Number of fibers**

Particles smaller than 5.0 microns are not to be counted by this method. The size of a particle is determined by its greatest projected dimension. Fibers are counted as particles.

f. Method of Counting Particles.

(1) Adjust microscope focus and lamp position so that maximum clarity of filter surface and particle definition is obtained.

(2) The largest projected dimension of the particle determines the size category of the particle.

(3) Use the counting plan as shown in figure 1A-2. Count 10 grid squares or

**Fibers will be included in their particle size range for computing the particles per cubic foot.

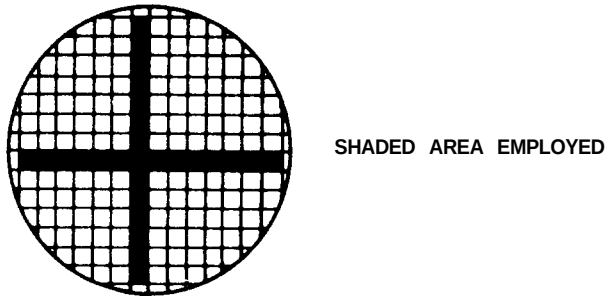

Figure 1A-2. Double Diameter Counting Plan

unit areas within different grid squares as indicated in the counting plan of figure 1A-3.

(4) After counting 10 squares or unit areas, if the total number of particles in each size range does not equal or exceed 50, count additional squares or unit areas until the following statistical requirement is met: $F_n \times N_t \geqq 500$, where F_n is the number of grid squares or unit areas counted and N_t is the total number of particles counted in F_n areas. If this requirement is not met for all size ranges after counting 50 areas, or 50 percent of the total effective filtering area, it will be necessary to increase the sample volume. Extreme caution must be maintained when examining the effective filter area due to no visual evidence of boundaries.

NOTE

The equation $F_n \times N_t \geqq 500$ must be met for each size range. It may, therefore, be necessary to tabulate the three separate ranges (5-15u, 15-25u> 25u) in the first 10 areas to satisfy the equation for each range, and then count only the particles greater than 25u in additional areas to get valid results for the third range. A lower magnification may be used to count the greater than 25u particles but is not recommended.

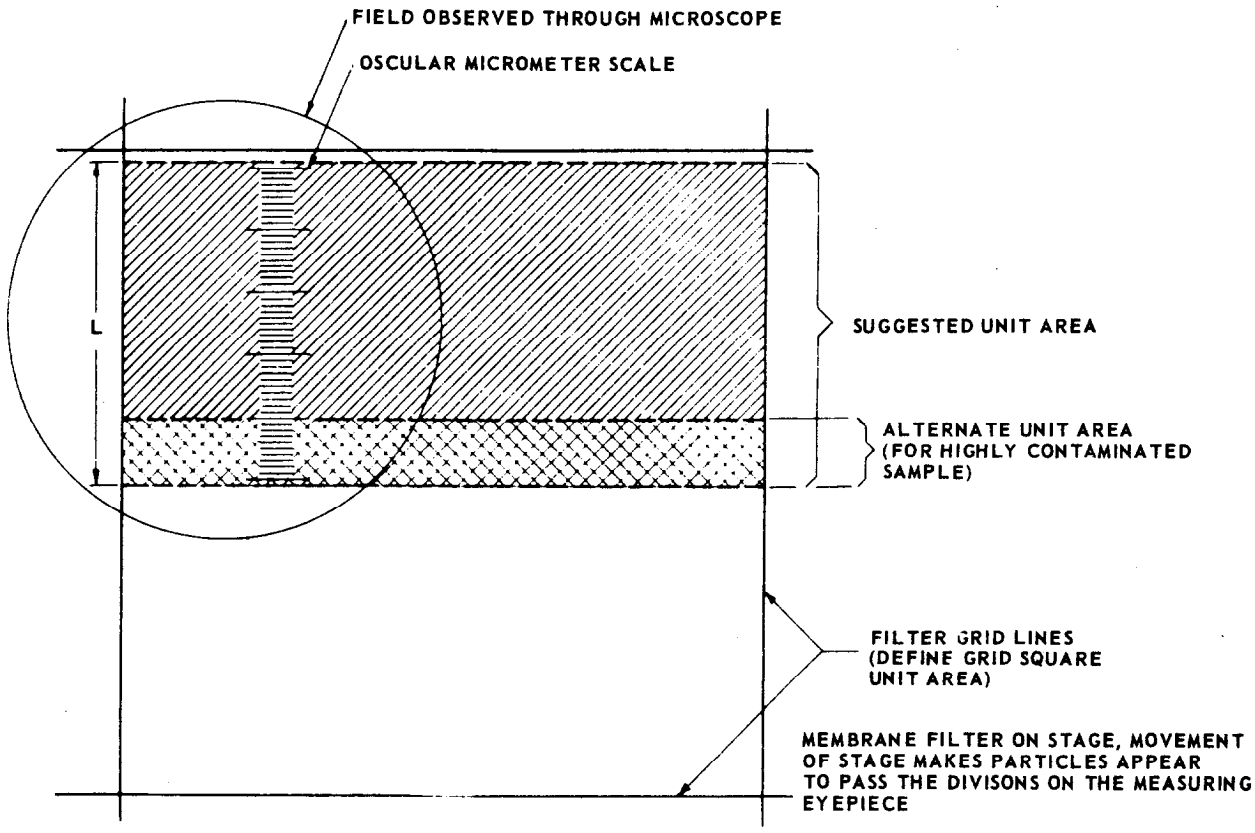

Figure 1A-3. Alternate Unit Areas

(5) In obtaining the total number of particles, 10 or more grid squares or unit areas on the filter disc are counted. From this count, the total number of particles, which would be present on the total effective filtration area of grid squares, is calculated.

(6) Unit areas for counting shall be selected so that the average total number of particles in a unit area does not exceed 50-60 particles. See figure 1A-3 for alternate unit areas.

(7) If a particle lies on the upper or left boundary line of a counting area, count this particle as if it were within the boundaries of the counting area.

(8) Start and finish a selected grid square or unit area sizing and counting from the left edge of a grid line, scanning exactly 1 grid square width as the operation continues from left to right. Optional unit areas are:

(a) A grid square.

(b) A rectangle defined by the width of a grid square and by the calibrated length of the ocular micrometer scale.

(c) A unit defined by the width of a grid square and a portion of the length of the ocular micrometer scale.

(9) Scan the unit area for particles by manipulating the stage so that particles to be counted pass under the ocular micrometer scale. Only the maximum dimension of the particle is regarded as significant, and for particles improperly oriented relative to the ocular micrometer scale, an estimate of maximum dimension is made. The eyepiece containing the ocular micrometer should not be rotated to size specific particles. Using a manual counter, count all particles in the selected areas which are in the 5.0 micron and greater range as indicated by the ocular micrometer scale. Record the number of particles in each size range in each unit area counted, in order to have a record of the number of unit areas and the particles counted to meet requirements of paragraph 1A-7f(4).

1A-8. CALCULATIONS.

Calculate the total number of particles in a given size range on the filter, in accordance with the formula:

$$P_t = N_t \times \frac{E}{n \times Af}$$

Where:

P_t is the total number of particles of a size range on the filter N_t is the total number of particles counted in n unit areas n is the number of unit areas counted

A_f is the unit area in mm^2

E is the effective total filter area in mm^2

Results should be expressed for each size range in particles per cubic foot of sample by dividing the P_t by the sample size (10 ft^3 standard)

$$P/ft^3 = \frac{P_t}{10}$$

Final results are in particles per ft^3 of sampled atmosphere, in size ranges determined.

1A-9. PRECISION AND ACCURACY.

a. The precision and accuracy of this method can be no higher than the sum total of the variables. In order to minimize the variables attributable to an operator, a trained microscopist technician is required. Variables of equipment are recognized by the experienced operator, thus further reducing possible error.

b. A periodic check of the microscopist with a check-slide* should be

*A commercially available pre-counted membrane filter mounted in a glass slide.

accomplished by individual laboratories to obtain quality results.

c. For training personnel, low to medium concentration specimens may be prepared on a grid filter and preserved between micro slides as standard for a given laboratory.

d. This method can be adapted for projection microscopic analysis by the use of white filter, transmitted light, and a properly marked projection screen. The projection techniques should be checked against a direct microscope count, because the optics of projection equipment are sometimes inadequate for resolution of small particles.

APPENDIX II

MANUAL MONITORING PROCEDURE
(COUNTING PARTICULATE CONTAMINANTS IN AND ON CLEAN ROOM GARMENTS*)

2A-1. SCOPE.

This method is used for determining the detachable particulate contaminant five microns or larger, in and on the fabric of clean room garments. It may also be used to determine if a fabric exhibits limited linting characteristics. The greatest number of particles allowed is 2000 per square foot of garment.

2A-2. SUMMARY OF METHOD.

Filtered air is drawn through five designated 0.01 square foot areas of a single thickness of the garment fabric at a rate of 14 1pm for one minute per area. The air drawn through the garment subsequently passes through a membrane filter disk, impinging the entrained particles upon the filter surface. The filter disk is then examined microscopically to determine the number of particles larger than five microns removed from the garment.

2A-3. DEFINITIONS.

a. The major projected dimension of a particle is designated as the particle size.

b. The standard unit of length for sizing purposes is the micron (m), which is 0.001 mm or 0.00004 in.

c. Only particles with a measurable length greater than 5u are to be counted.

d. Fiber is a particle longer than 100 microns with a length to width ratio exceeding 10 to 1.

*Abstracted from ASTM F51-65T titles "Tentative Method for Sizing and Counting Particulate Contaminant in and on Clean Room Garments".

2A-4. APPARATUS.

a. Filter Assembly and Adapter, figure 2A-1.

b. Vacuum Pump or Aspirator, capable of producing a vacuum of 500 torr (500 mm Hg.

c. Flowmeter or orifice having a capacity of 14 liters per minute.

d. Membrane filters (black, blue, or green), 0.80 micron pore size, 47 mm diameter with 3.08 mm imprinted grid (for fabric particles), and white, 5.0 micron pore size, 47 mm diameter (air prefilter).

Microscope and counting apparatus - Refer to Appendix I and figure 2A-2.

2A-5. SAMPLING REQUIREMENTS.

a. The sample shall be collected by drawing five-micron filtered air through the test garment, impinging the garment borne particles on the membrane filter. The gridded filter surface mounted in the open-type aerosol filter holder shall be placed on the outer surface of the test garment. The garment is firmly clamped to the filter holder by means of the air filter adapter. During sampling, the garment shall be hung or carefully positioned to minimize extraneous contamination.

b. The standard sample for this method is secured with the passage of 14 liters of air through the test fabric during a one minute period at each of five sampling areas as shown in figure 2A-3. One sampling area is adequate for caps, helmets, towels, wipers, and booties with

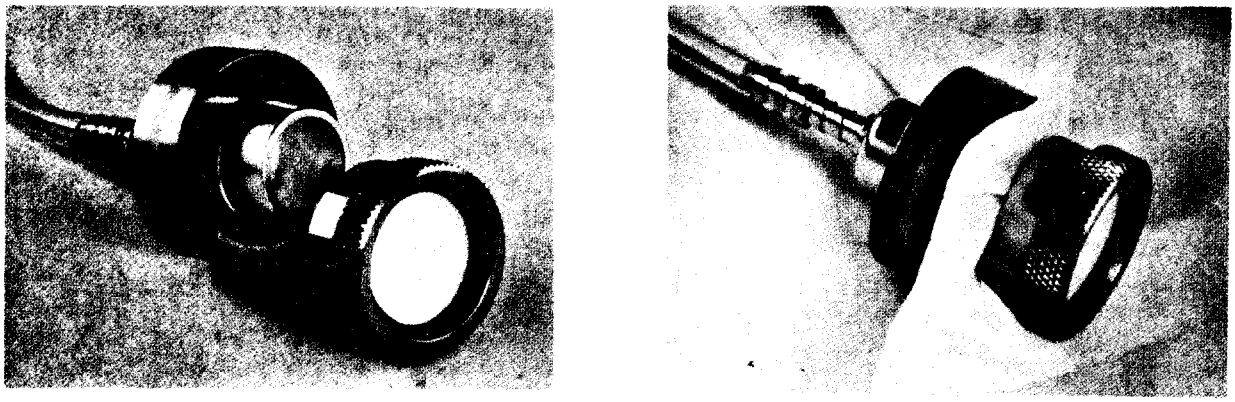

Figure 2A-1. Filter Assembly and Adapter

Figure 2A-2. Typical Counting and Sizing Microscope and Illuminator

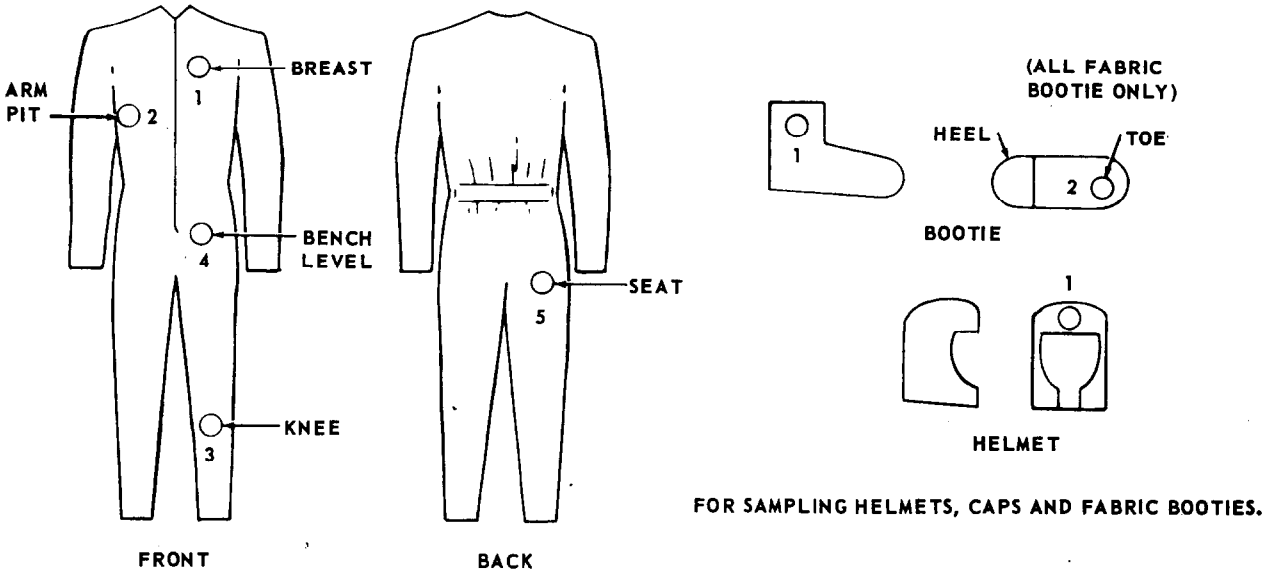

FOR SAMPLING FROCKS AND SMOCKS
EMPLOY SAME (APPROXIMATE) SAMPLING LOCATIONS.

Figure 2A-3. Clean Room Garment Sampling Locations

plastic soles. Two areas are suggested for all-fabric booties.

c. Locations are approximate and may by agreement be modified to suit a specific design factor.

2A-6. PREPARATION OF APPARATUS,

a. Prior to sampling, dirt and dust are to be removed from the filter holder by washing in a free-rinsing detergent, ketone-free isopropyl alcohol and reagent grade petroleum ether (30-60°C boiling range).

b. The laboratory equipment and area used for counting and sizing the airborne particulate are to be maintained in a condition of cleanliness paralleling or superior to the area sampled.

C. Personnel performing sizing and counting operations are to be equipped with garments consistent with good practice.

d. Microscope slides and Petri dishes are to be cleaned and prepared before samples are taken. Lens tissue or rinsing with .3 micron cleaning fluids is satisfactory for this purpose.

e. Hazardous chemicals employed in the method are to be handled with recognized precautions.

f. A background count will be made of each membrane filter which is to be used in the certification of a clean room facility. Examination at 40 - 50X through bench or stereo microscope will reveal low or high background count.

For routine work, an average background count may be used by counting 4 filters per box of 100. However, if the background count approximates 10% or greater, of the sample count, each individual filter should have a background count established. * This background count should be subtracted from the sample count.

*If the background count is estimated to be greater than 10 percent of the total count from a 10 ft^3 specimen, a larger sample (15 to 20 ft^3 volume) may be used.

h. Acceptable filters shall be placed in clean and identified Petri dishes for test use and covered.

2A-7. SAMPLING PROCEDURE.

a. With the aid of laboratory pressure tubing, connect the filter holder to a source of vacuum established adequate to produce a flow rate of 14 liters per minute, at vacuum conditions of test (350 torr). Holder may be open, may contain a limiting orifice, or may be connected to flowmeter. If flowmeter is used between filter holder and vacuum source, correction to standard temperature and pressure must be made to determine actual standard temperature and pressure flow.

b. With clean forceps, carefully remove the 0.8 micron, dark background, membrane filter from the container and place - with grid side up - on the screen support of the filter holder. Twist the locking ring in place after placing the tapered adapter in position (figure 2A-1). Similarly, place 5.0 micron air filter in top portion of adapter by removing “0” ring from adapter top, placing white filter on the support screen and replacing “0” ring. (This filter may be used for many tests.)

c. When ready to sample, place the outer surface of test garment over the tapered (male) adapter. Firmly lock into test position by placing air filter tapered (female) adapter over test portion of fabric.

d. Apply vacuum at predetermined 14 liters per minute for a period of one minute for each area. Sample required areas (figure 2A-3) by repeating preceding paragraph c.

e. Remove the filter from the holder with forceps and place it between clean microscope slides or in a clean Petri dish for transport to the microscope counting area.

f. The garment to be tested must be sampled in an area having a contaminant level equal to or less than a conventional clean room. The sample should not be removed from the sealed plastic package

until the test is ready to be performed. Care must be taken to insure that limited handling of sample is maintained after removal from sealed bag. The sampling apparatus should be thoroughly cleaned before experiment is performed.

2A-8. MICROSCOPE ANALYSIS PROCEDURE.

a. Calibration of Ocular Micrometer Scale - Using a stage micrometer, determine the micron spacing of the ocular micrometer scale. Using 10X eyepieces and 10X objective, the minor divisions (100 in scale) should equal approximately five microns.

b. Remove filter from Petri dish and place it, with filtering surface up, on a 2" x 3" microscope slide. Greasing the slide lightly with silicone stop-cock lubricant, prior to mounting filter, will assist in holding the filter flat in place.

c. Adjust external light source to obtain maximum particle definition, with an illumination angle of approximately 45°.

d. By means of the mechanical stage, scan individual grid squares. With a gating technique, count and tabulate particles in two categories :

(1) Particles with major dimension greater than five microns. *

(2) Fibers (see Definitions, paragraph 2A-3,d).

e. Count the particles in a number of grid squares selected at random until meeting the statistical requirements :

$F_N \times N_T > 500$, where

F_N is the number of grid squares counted, and N_T is the total number of particles counted in F_N squares.

*Particles smaller than five microns are not to be counted by this method.

f. A background count will be run on a new filter from the same box from which the sample filter was obtained. This background count should be subtracted from the sample count. For best results, the exact filter used for testing purposes should have the background count established. If the background count is 10% of the estimated sample count, a larger sample volume must be established.

2A-9. CALCULATIONS.

a. To calculate the total number of particles > 5 microns and fibers on the filter, multiply the count of each category by $100/F_N$, where F_N is the number of grid squares counted. (There are 100 grid squares on the effective filtering area of the filter.) To compute the number of particles per square foot of fabric, multiply the total filter count obtained above by 20, * * providing that five areas of garment were sampled. (Let the total number of areas samples be F_A.)

b. Report results in terms of total particles per square foot in the two categories:

(1) Particles > 5 microns.

(2) Fibers.

These represent the particles and fibers per square foot of fabric removed from representative areas of the garment.

2A-10. FACTORS AFFECTING PRECISION AND ACCURACY.

a. The precision and accuracy of this method can be no higher than the sum total of the variables. In order to minimize the variables attributable to an operator, a trained microscopist technician is required. Variables of equipment are

**Each garment sample area is 1/100 square foot designed into Assembly and Adapter (figure 2A-1). Five sampling areas provide a garment sample of 1/20 square foot.

recognized by the experienced microscopist, thus further reducing possible error.

b. The 500 count method has been determined to have merit. Since the possibility of having from 2 to 5 specimens per referee investigation exists, the fatigue factor is less than that for more time-consuming methods of counting.

c. For training personnel, low to medium concentration specimens may be prepared on a grid filter and preserved between microscope slides as standards for a given laboratory. Standard specimens are commercially available.

2A-11. EXAMPLE.

Sixty particles 5.0 microns and larger were collected on 30 grid squares when five 0.01 square-foot areas were sampled on a clean room garment.

F_N = 30 grid squares

N_T = 60 particles

F_A = 5 areas sampled

$F_N \times N_T = 30 \times 60 = 1800 > 500$

$$\text{Total particles} \times \frac{100}{F_N} \times \frac{1.00}{F_A \times .01} = \text{Particles/Ft}^2$$

$$60 \times \frac{100}{30} \times \frac{1.00}{(5)\,(.01)} = \frac{6000}{1.5} = 4000 \text{ Part/Ft}^2$$