WELCOME TO TECHNICAL ORDER 00-105E-9.

THIS IS SEGMENT 15 COVERING CHAPTER 28.

IF YOU WOULD LIKE TO GO DIRECTLY TO THE TECHNICAL ORDER, CLICK ON THE CONTINUE BUTTON.

TO SEE THE SEGMENT INFORMATION CHANGE NOTICE, CLICK ON THE NOTICE BUTTON.

CONTINUE

NOTICE

CONTACT

IF YOU NEED TO CONTACT THE TECHNICAL CONTENT MANAGER FOR THIS TECHNICAL ORDER, CLICK ON THE CONTACT BUTTON.

TECHNICAL ORDER 00-105E-9 TECHNICAL CONTENT MANAGER

WRITTEN CORRESPONDENCE:

HQ AFCESA/CEXF
ATTN: Fire Protection Egress Manager
139 Barnes Drive Suite 1
Tyndall AFB, Florida 32403-5319

E-MAIL: Tom.Stemphoski@tyndall.af.mil

INTERNET: HQ AFCESA Fire Protection PUBLIC WEB PAGE:
http://www.afcesa.af.mil/Directorate/CEX/Fire/default.html

PHONE: (850) 283-6150
DSN 523-6150

FAX: (850) 283-6390
DSN 523-6390

For technical order improvements, correcting procedures, and other inquiries, please use the above media most convenient.

SEGMENT 15 INFORMATION CHANGE NOTICE

This page is provided to notifiy the user of any informational changes made to Technical Order 00-105E-9 in this Segment and the current Revision. Informational changes will be referenced in the Adobe Reader's Bookmark tool as a designator symbol illustrated as a <[C]> for quick reference to the right of the affected aircraft. The user shall insure the most current information contained in this TO is used for his operation. Retaining out of date rescue information can negatively affect the user's operability and outcome of emergencies. If the user prints out pages his unit requires, the user shall print the affected page(s), remove and destroy the existing page(s), and insert the newly printed page(s) in the binder provided for that purpose. A Master of this TO shall be retained in the unit's library for reference, future printing requirements and inspections.

CHAPTER	AIRCRAFT	PAGE	EXPLANATION OF CHANGE
28	Eurofighter 2000	ALL	Aircraft added to inventory.
28	JA 37	ALL	Aircraft added to inventory.
28	JAS 39	ALL	Aircraft added to inventory.
28	Rafale	ALL	Aircraft added to inventory.

NOTE

Chapter 28 contains emergency rescue and
mishap response information for the following NATO aircraft:

BE	**CM-170**
UK, GE, IT, SP	**EUROFIGHTER 2000**
SP	**E-25 CASA 101**
GE, TU, SP	**F-4/RF-4E**
US, NO, TU	**F-5**
US, BE, DE, NO, PO, NL	**F-16**
US, CA, SP	**F-18/CF-188/C-15/CE-15**
TU	**F-100**
GE, IT, NO, TU	**F-104**
IT	**G-91Y**
SW	**JA 37**
SW	**JAS39**
GE	**MIG 29**
GE	**PA 200 TORNADO**
FR	**RAFALE**
FR	**SUPER ENTENDARD**
US, CA, UK	**T-45/CT-155/HAWK TI & T1A**

*** Aircraft information pending**

CHAPTER 28

NATO

FIGHTER

AEROSPACE EMERGENCY RESCUE AND MISHAP RESPONSE INFORMATION

28-1. INTRODUCTION AND USE.

28-2. This section contains emergency rescue and mishap response information illustrations in alphanumerical order relative to type and model of aircraft. This arrangement of illustrations is maintained from Chapter 4 throughout the remainder of the publication.

28-3. GENERAL ARRANGEMENT.

28-4. Aircraft type designation has been positioned in the upper right corner of the horizontal illustration for rapid identification. Additional aids to rapid orientation are:

a. Recent technological advances in aviation have caused concern for the modern firefighter. Aircraft hazards, cabin configurations, airframe materials, and any other information that would be helpful in fighting fires, the locating and rescue of personnel will be added as the information becomes available.

b. Suggested special tools/equipment are listed in the upper left corner, on the Aircraft/Entry page of each listed aircraft.

c. Procedural steps covering emergency/normal entrances, cut-ins, engine/APU shutdown, safetying ejection/escape systems, and aircrew extraction are outlined on the left side of each page with coordinated illustrations on the right.

d. Illustrations located on right side of pages are coordinated with text by numerals and small letters depicting both paragraph and subparagraph on the page.

e. Each illustration is consistently colored and/or pattern keyed to highlight essential emergency rescue information.

f. Details are pulled directly from the illustration to highlight an area, thus eliminating unnecessary searching for desired information.

CM-170

SPECIAL TOOLS/EQUIPMENT
Power Rescue Saw
Crash Ax

AIRCRAFT ENTRY

1. NORMAL ENTRY

a. Entry procedures pending.

2. EMERGENCY ENTRY

NOTE:
Aircraft is not equipped with ejection seats.

a. Break canopy glass on right or left side of aircraft.

b. Pull canopy jettison handle, located on left side of fuselage. Do not pull handle if canopies are damaged.

3. CUT-IN

a. Cut-in as required.

OTHER HAZARDS:

Acids - Batteries
Asbestos - Brakes
Lithium - Batteries
Polytetrafluoroethylene (PTFE)
Fuel: JP-8
Hydraulic Oil: H-515
High Pressure Gases: Nitrogen
Engine Oil: O-156
Oxygen: Gaseous

NOTE:
External armament possible.

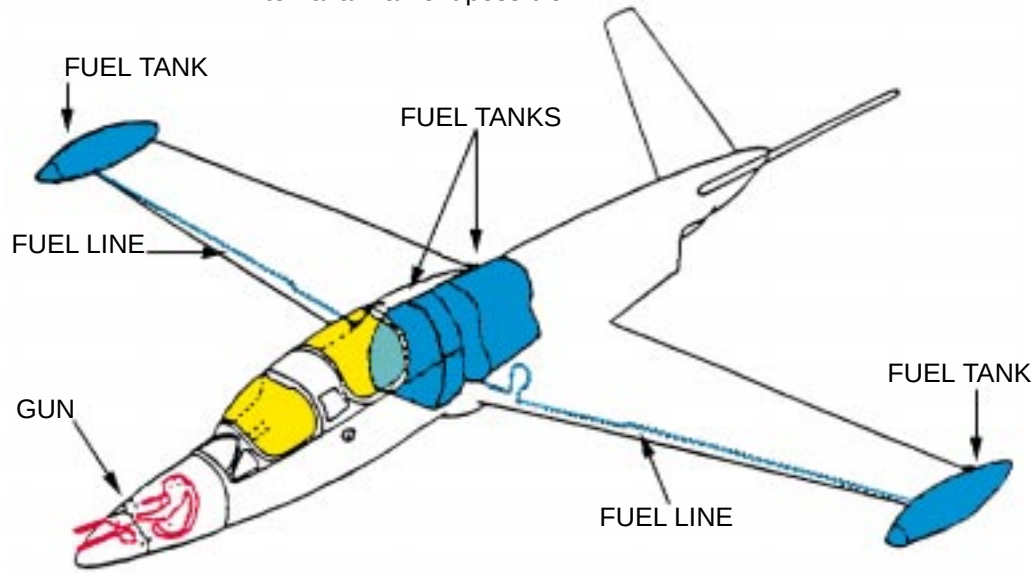

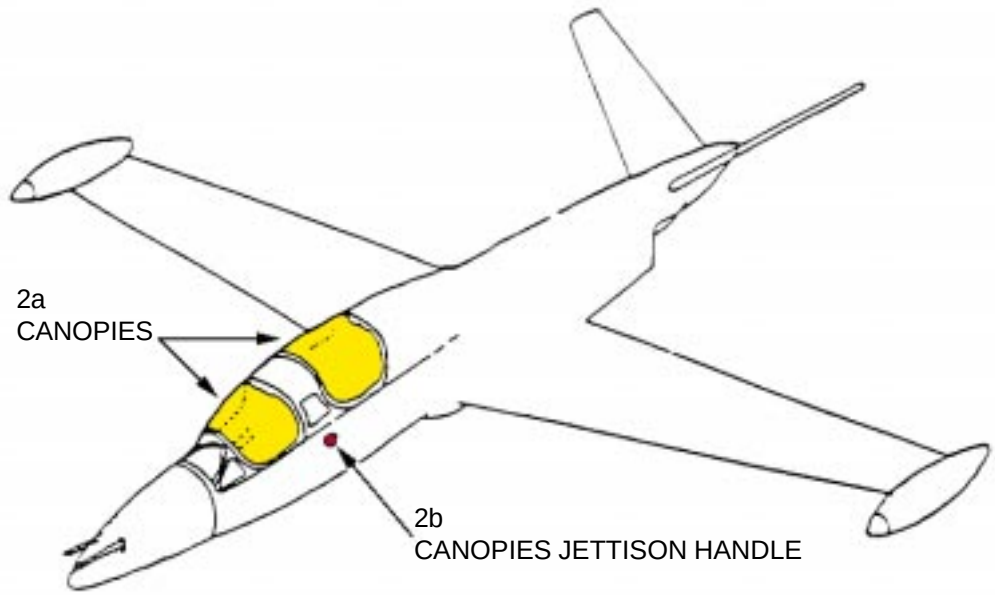

ENGINE SHUTDOWN AND AIRCREW EXTRACTION

1. ENGINE SHUTDOWN

a. Pull fuel cocks, located on center console right side, to the full AFT position.

b. Pull throttle, located on center console, to the full AFT position.

c. Place battery switch, located on lower right forward instrument panel, to the OFF (DOWN) position.

2. AIRCREW EXTRACTION

a. Disconnect crewmember restraints and any other equipped connected to crew-members that would impede extraction.

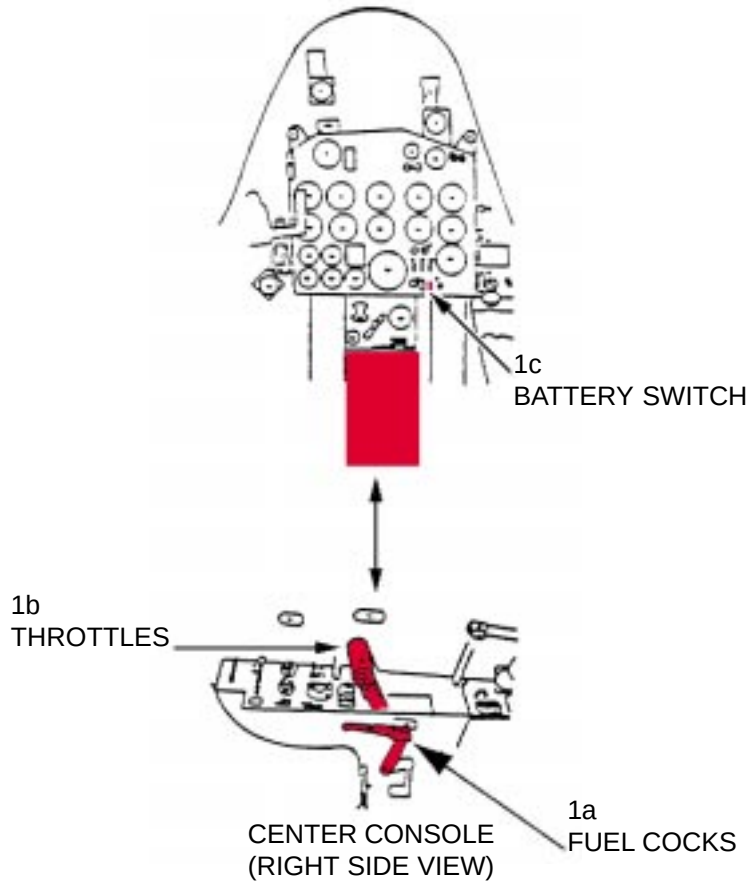

AIRCRAFT PAINT SCHEME

EUROFIGHTER 2000

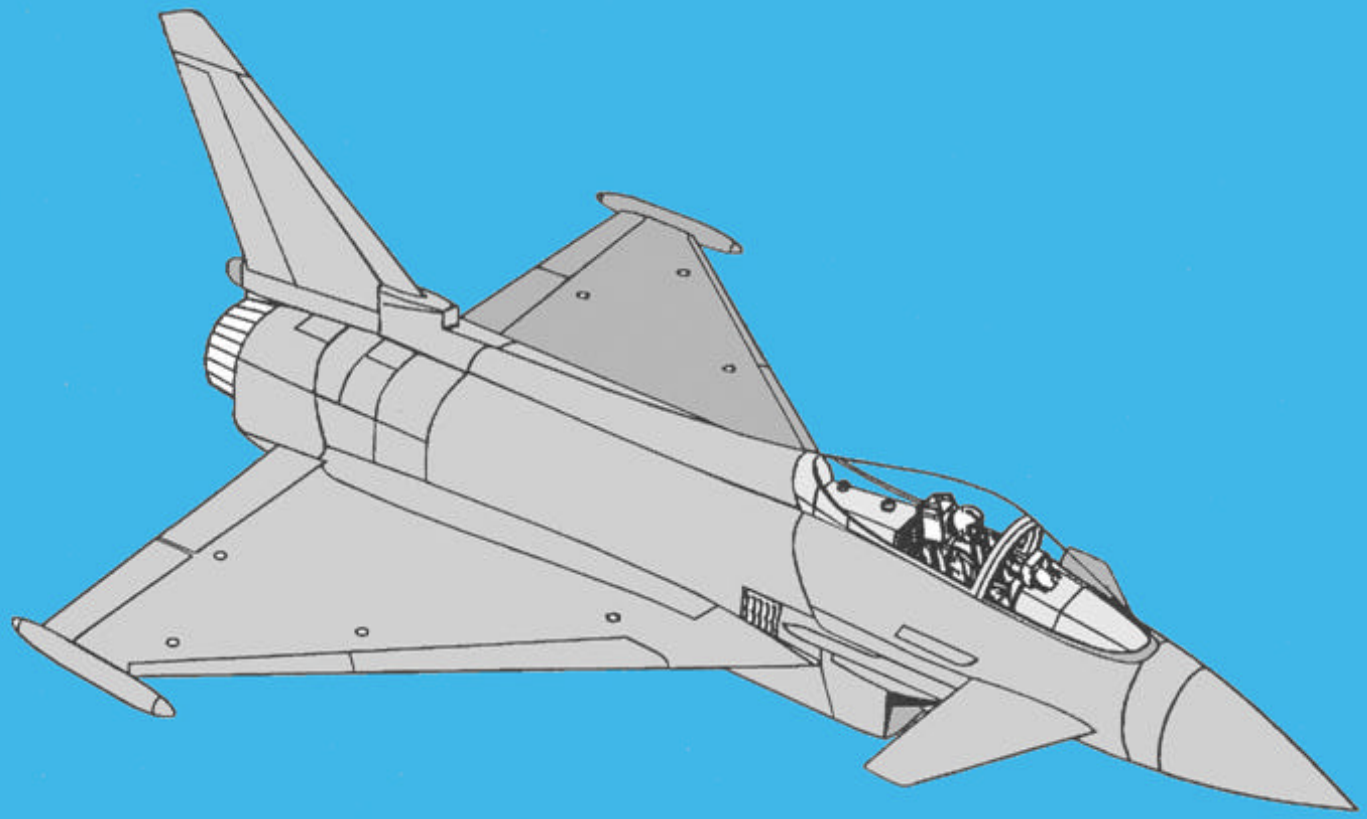

AIRCRAFT DIMENSIONS

EUROFIGHTER 2000

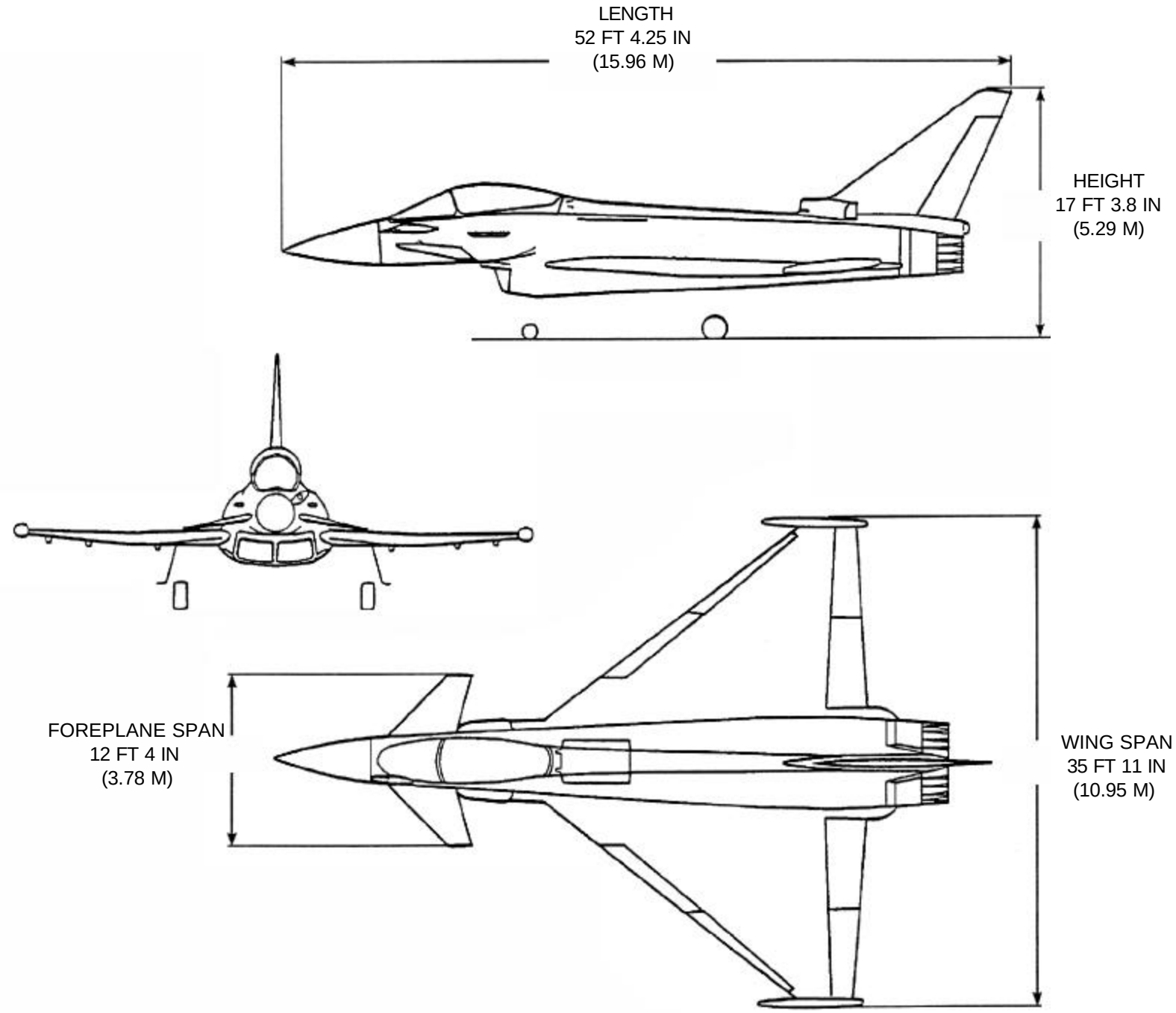

AIRFRAME MATERIALS

1. AIRFRAME MATERIALS

GRP

CFRP

NOTE:

Many parts, such as doors, panels, edges, profiles and radome, are made of glass fiber-reinforced (GRP) or carbon fiber-reinforced (CFRP) composite materials. Not all of these, however, are externally visible. Almost 30% of the structure are made of CFRP and so is most of the skin which is approximately 70%.

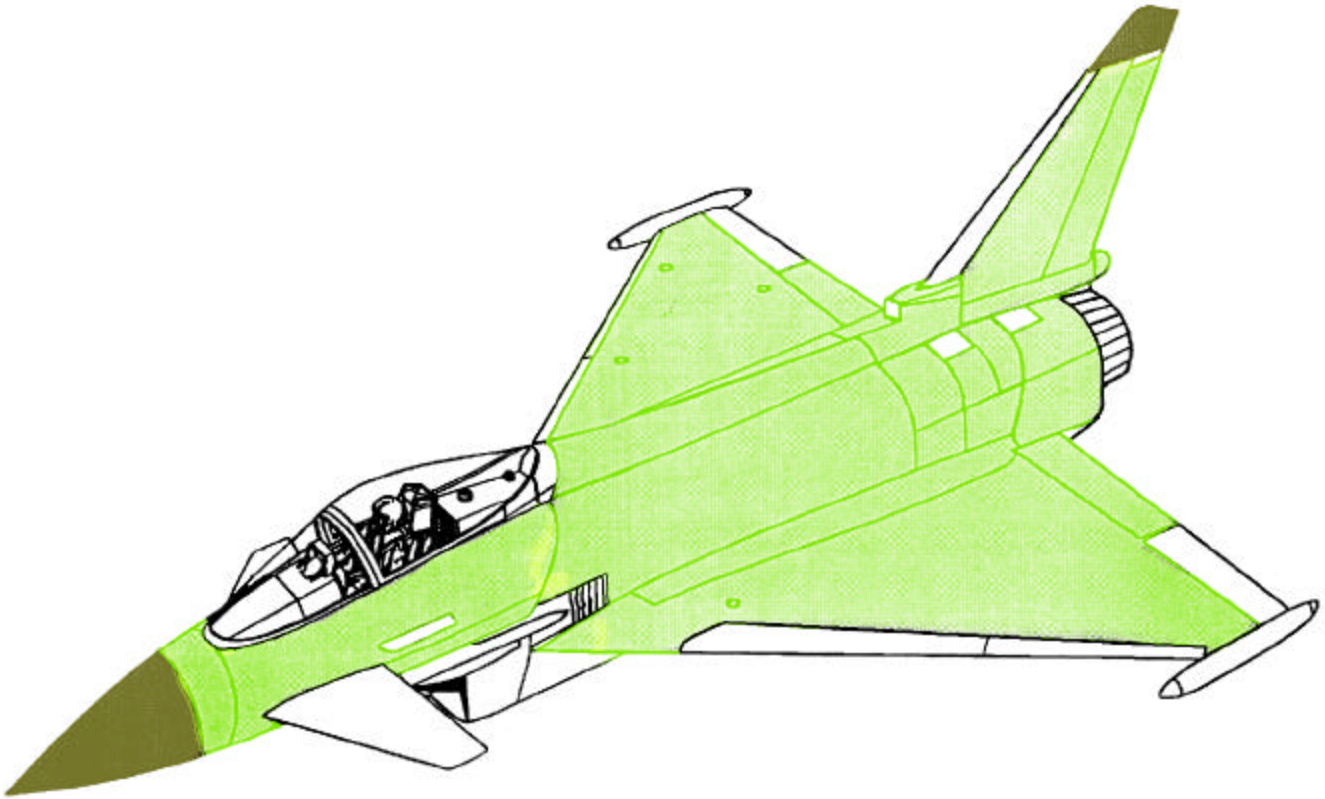

AIRCRAFT HAZARDS

1. RADAR, ENGINE INTAKE AND EXHAUST HAZARD AREAS

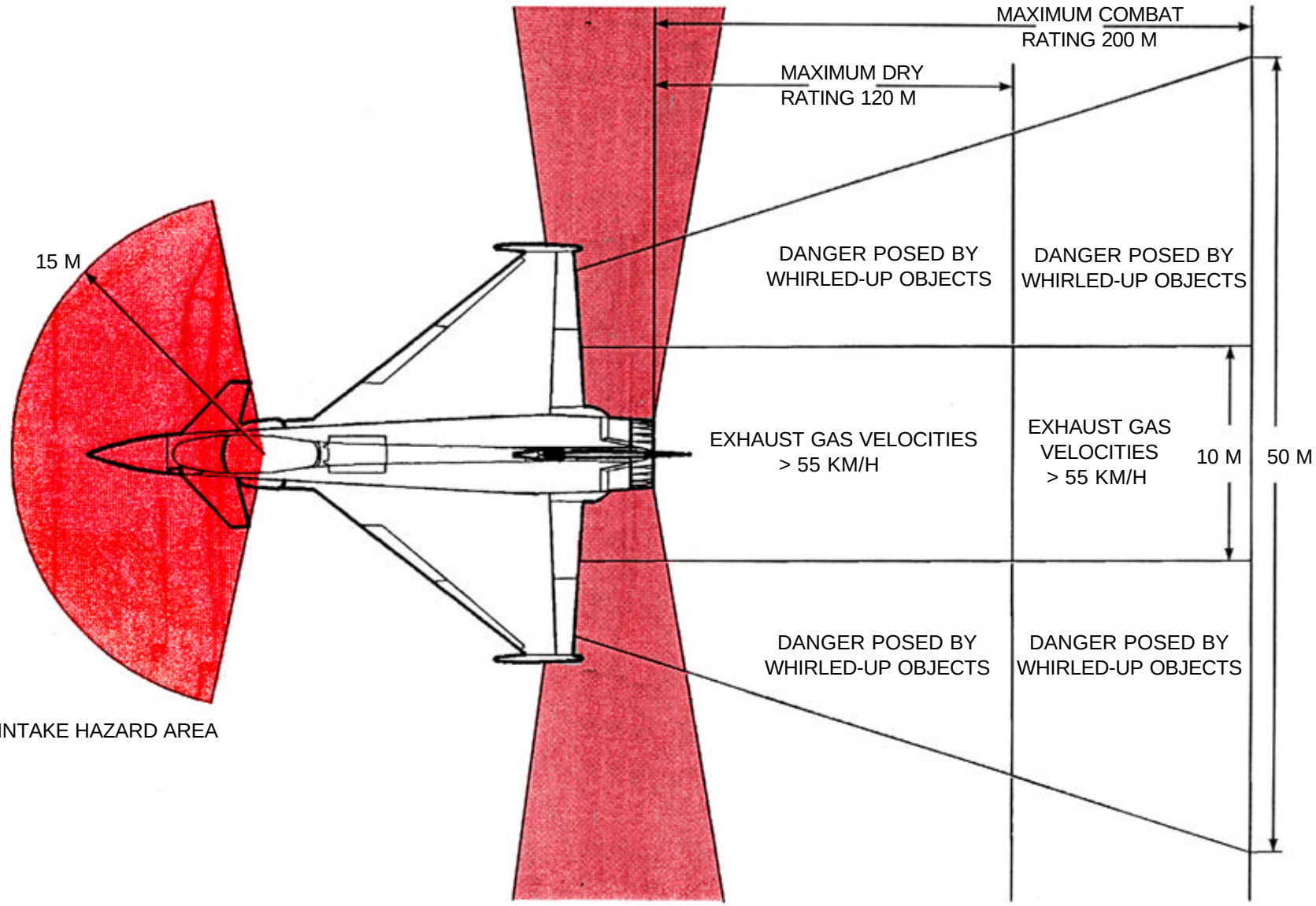

AIRCRAFT HAZARDS - Continued

1. WEAPONS LOCATIONS AND HAZARDS

a. Guided missiles and airdropped ammunition can be carried on 13 external load stations.

b. For self-protection purposes, the aircraft may be equipped with chaff and/or flare dispenser cartridges. The location for the dispensers are at the rear of installed integrated wing tip stations.

c. A 27mm Mauser gun with a maximum of 150 rounds of linkless live or exercise ammunition which is contained in the ammunition box and partly in the guns and feed system. The gun is located at the forward right wing root.

d. External loads are mounted on ejector release units (ERU) installed in the pylons. Depending on the load carried, the pylons are equipped with either a light-duty or a heavy-duty ERU. If necessary, the loads are ejected by means of two cartridges. Three ejector cartridges each are installed in the four missile ejection launchers, the multifunction rail launchers comprise two cartridges each. To increase capacity, twin store carriers and twin missile carriers can be mounted.

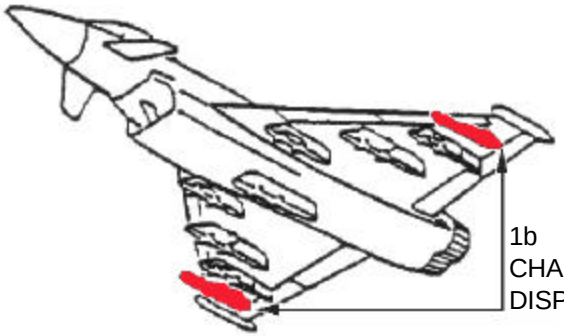

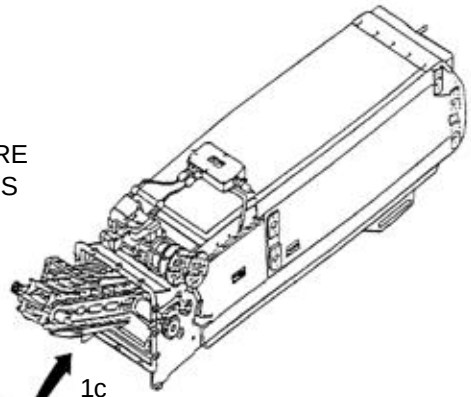

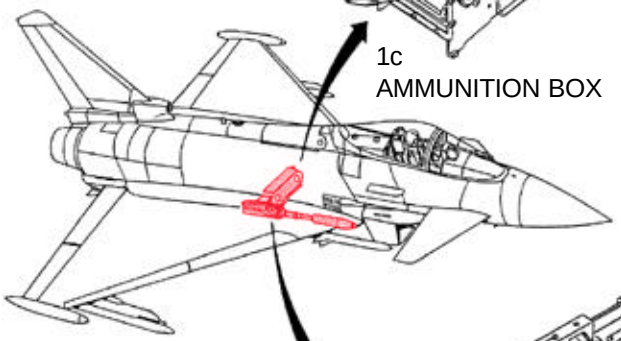

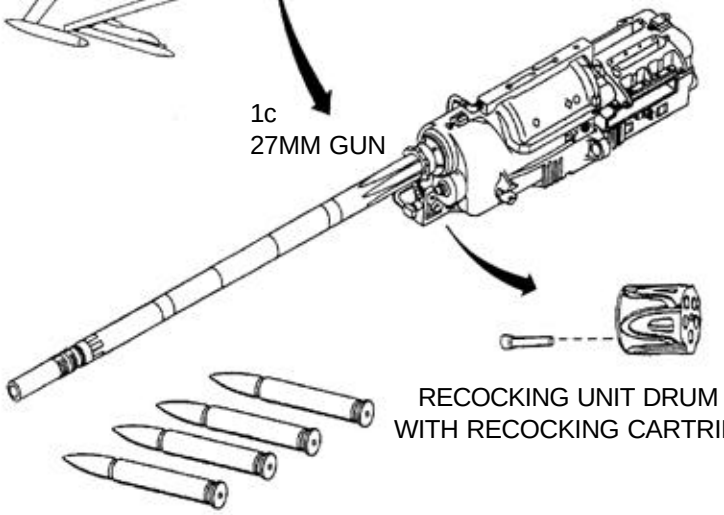

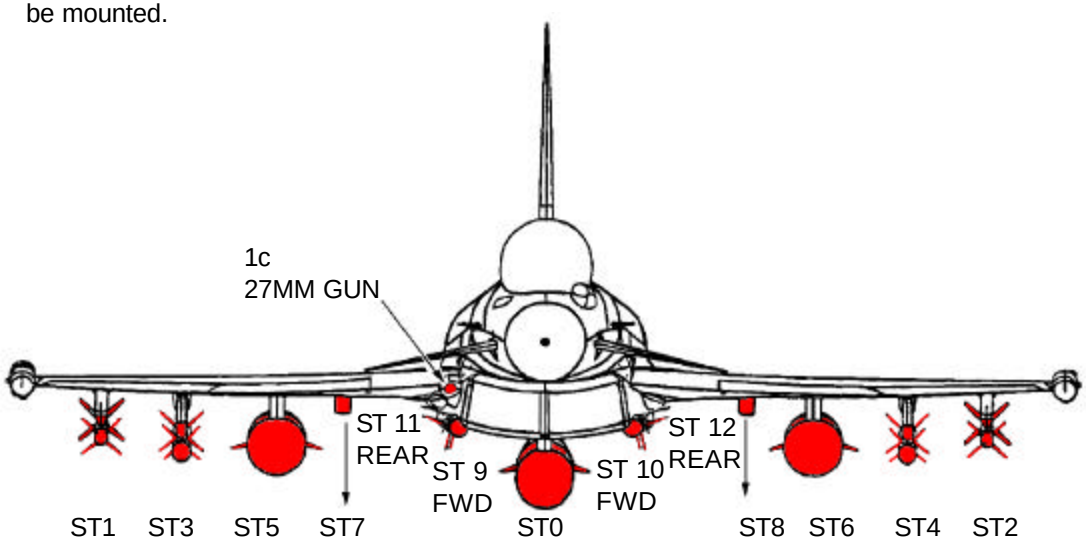

1a
EXTERNAL LOAD STATIONS

AIRCRAFT HAZARDS - Continued

1. FUEL SYSTEM

a. The fuel system is comprised of several internal fuselage and wing tanks which are interconnected by tubing and flanges. These are structural tanks, the metallic airframe structure serving as tank walls. There are a maximum of three external tanks.

b. The pylons contain special ERUs to eject the external fuel tanks. These units contain two ejector cartridges. Single and dual seat models can carry these fuel tanks.

c. Internal fuel capacity: CLASSIFIED

SINGLE SEAT AIRCRAFT

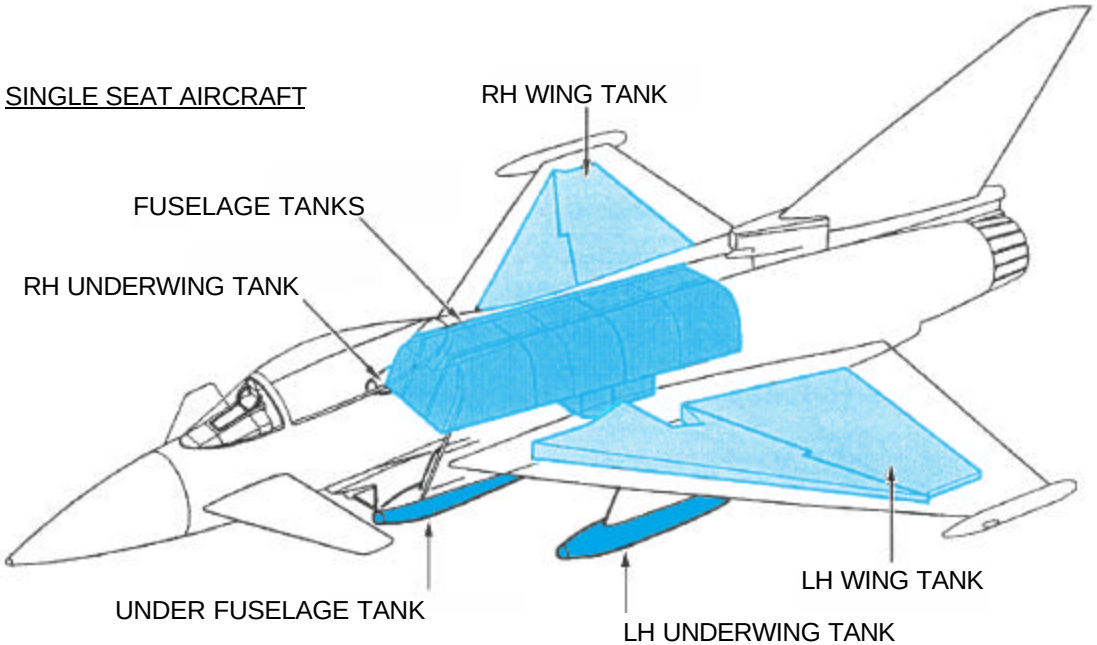

DUAL SEAT AIRCRAFT

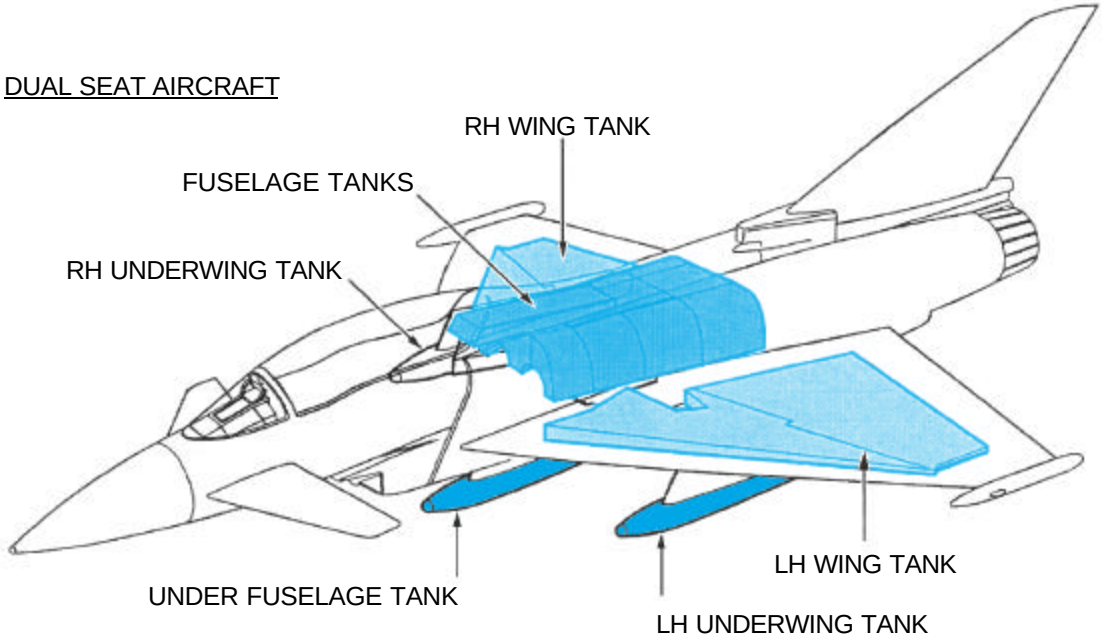

1b
UNDER FUSELAGE TANKS

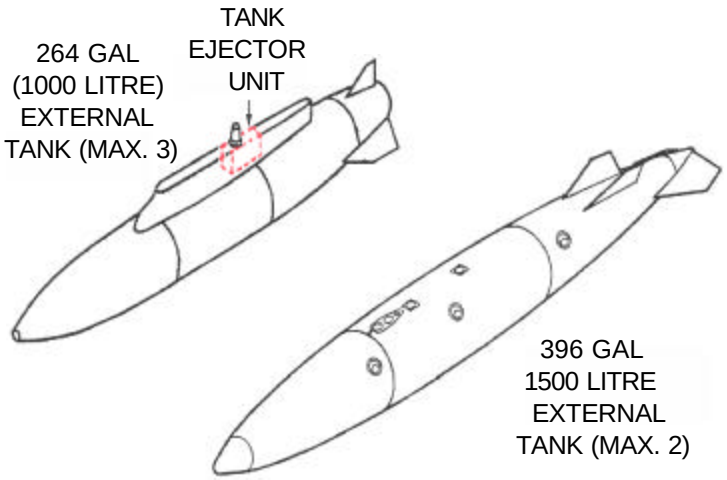

AIRCRAFT HAZARDS - Continued

EUROFIGHTER 2000

1. MISCELLANEOUS SYSTEMS HAZARDS

a. The escape system consists of one or two Martin-Baker Mk 16 zero/zero seats and a canopy jettison system incorporating pyrotechnical devices for both areas.

b. The aircraft is equipped with two hydraulic systems which is maintained at a maximum operating pressure of 270 bar. It is primarily contained in the existing two accumulators, two reservoirs, the associated tubing and two nitrogen bottles. Engines are also equipped with a hydraulic system. (NATO H-515 (H-537))

c. The engine oil has its own tank fixed to the accessories drive gearbox under the engine. (NATO O-160)

d. The Secondary Power System (SPS) is installed forward of the engines and serves the purpose of driving generators, hydraulic pumps and the engines during start-up. The SPS comprises an APU, control elements, accessories and two accessory drive gearboxes. The APU uses compressed air to operate an air turbine starter motor and the accessories drive gearboxes. The APU and the accessory drive gearboxes have integrated oil systems containing lubricating oil. APU exhaust leaves the airframe rearward above the wing. (NATO O-160) (Gearbox 2.5 L (each): NATO O-156)

e. The oxygen system consists of an oxygen generator and provides the aircrew with pure oxygen. No liquid or gaseous oxygen is stored in the main oxygen system.

f. DA 05 and 07aircraft are equipped with a nickel-cadmium battery consisting of 20 cells and filled with potassium hydroxide. For DA 01, an additional battery is located on under side of radome. Lithium batteries are used in the Crash Survivable Memory Unit located at the left side of tail base. Two thermal batteries are used on each ejection seat.

g. Beryllium is used, e.g. for coating switching contact surfaces. Quantities are rather small. If general safety regulations are observed, no hazards to personnel should exist.

L=LITRES

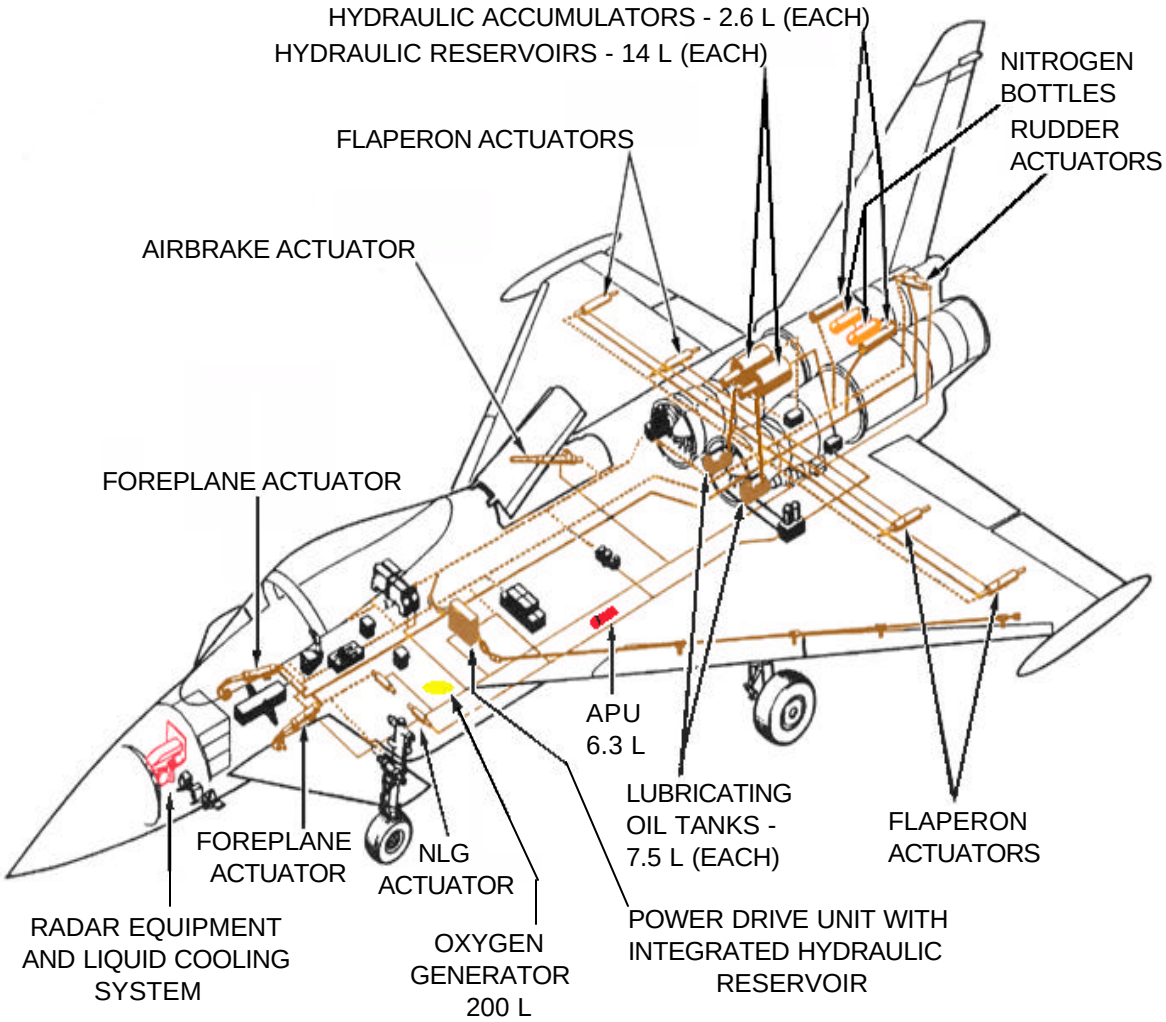

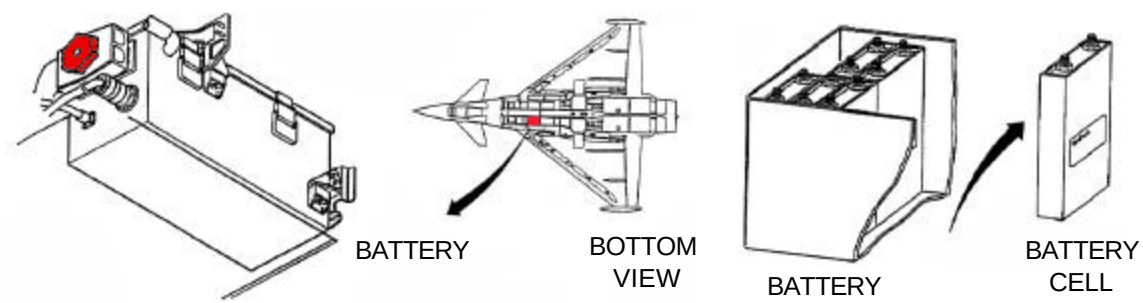

AIRCRAFT HAZARDS - Continued

LEGEND OF AIRFRAME HAZARDS

1 FLIGHT REFUELING PROBE
2 CANOPY (TWO ROCKET MOTORS AT FWD CORNERS AND TWO EMERGENCY UNLOCK CYLINDERS AT AFT)
3 EJECTION SEAT (MULTIPLE PYROTECHNICS)
4 LEADING EDGE SLATS
5 AIR BRAKE
6 FLAPERONS
7 RUDDER
8 APU EXHAUST
9 FOREPLANES
10 APU INTAKE
11 ARRESTER HOOK
12 ACFC OUTLET
13 COMBINED ENGINE FUEL DRAIN
14 ENGINE GEARBOX BREATHER EXHAUST
15 NOZZLE AIR MOTOR EXHAUST
16 REHEAT PURGE EXHAUST
17 EPU EXHAUST (DA2 ONLY)

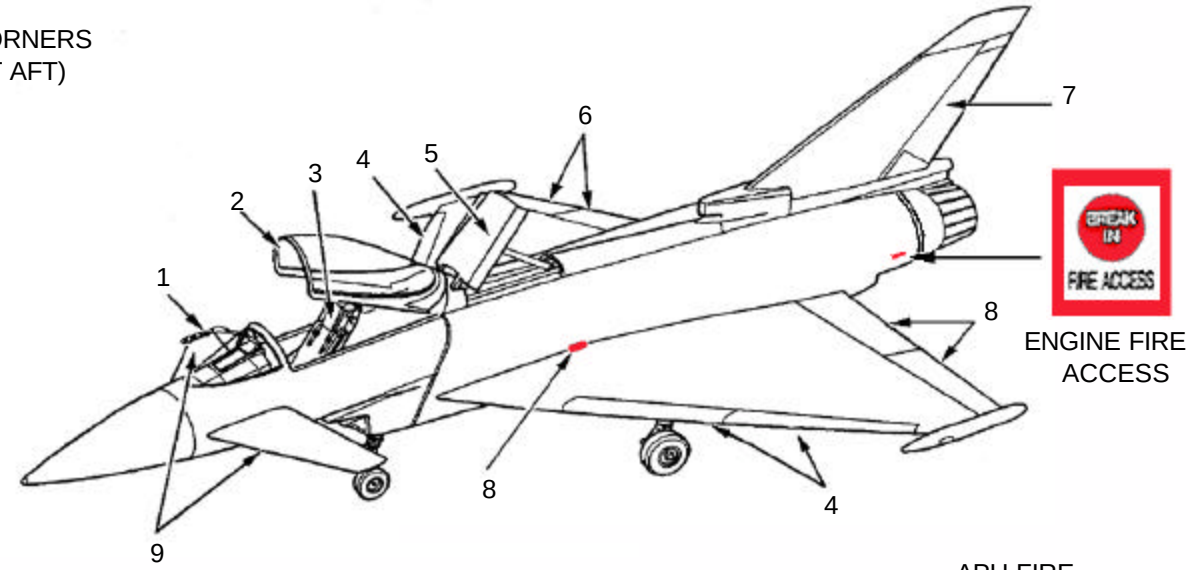

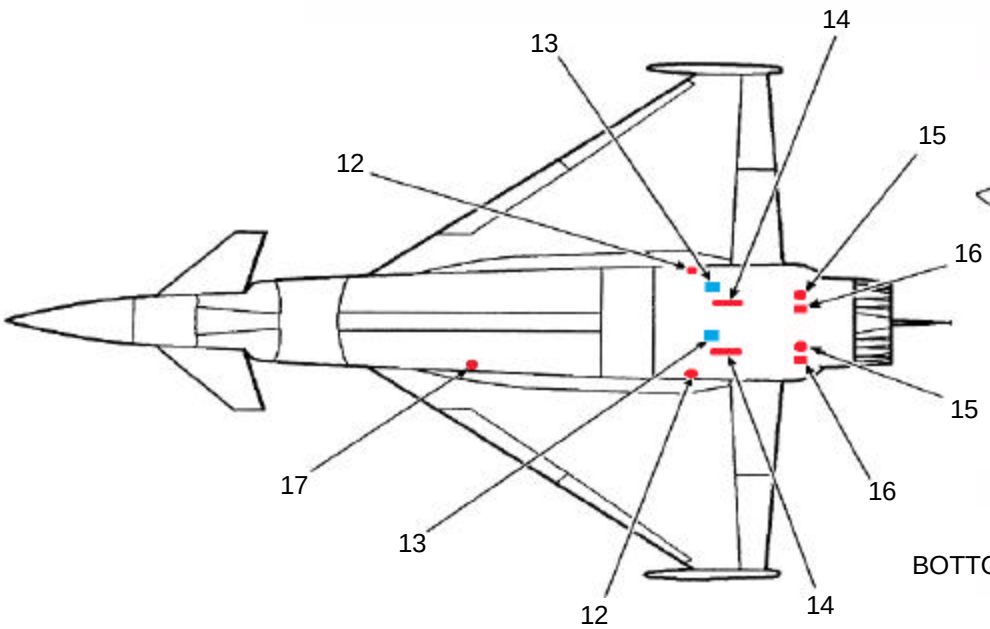

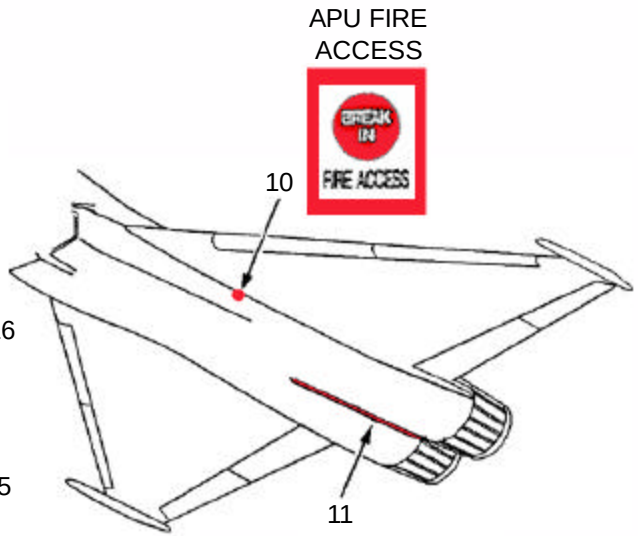

BOTTOM VIEWS

SPECIAL TOOLS/EQUIPMENT
Power Rescue Saw Fire Drill II Puller
Common Screwdriver Canopy Actuator Sleeve
Canopy Support Strut Canopy Safety Pin

AIRCRAFT ENTRY

1. NORMAL ENTRY - ELECTRICAL/HYDRAULIC

WARNING

When approaching aircraft with engines running, always observe danger areas.

a. At forward underside of left wing, locate and open access panel with snaps.

b. Place exposed canopy actuator switch to the OPEN position until canopy is fully opened.

NOTE:
If canopy does not open when switch is actuated, the canopy pressure accumulator can be charged with the on board hydraulic hand pump. After accumulator is charged, opening procedure must be repeated.

2. CHARGING HYDRAULIC ACCUMULATOR

a. Open access panel, located behind left main landing gear well with two snaps, to expose hydraulic hand pump for use.

b. Remove quick-release pin from pump lever.

c. Remove handle from inside access panel, attach handle to pump lever and install quick-release pin.

d. Operate hydraulic hand pump by back and forth cycles.

e. If canopy remains open for a longer period, a safety sleeve must be installed around the canopy actuator cylinder, to prevent inadvertant closing.

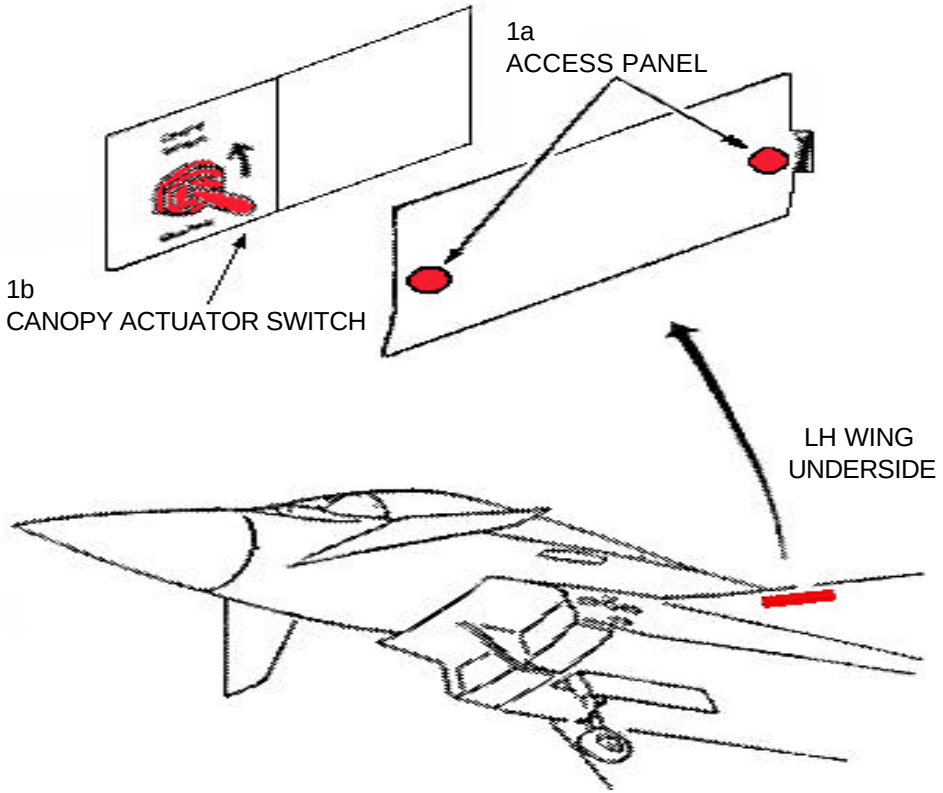

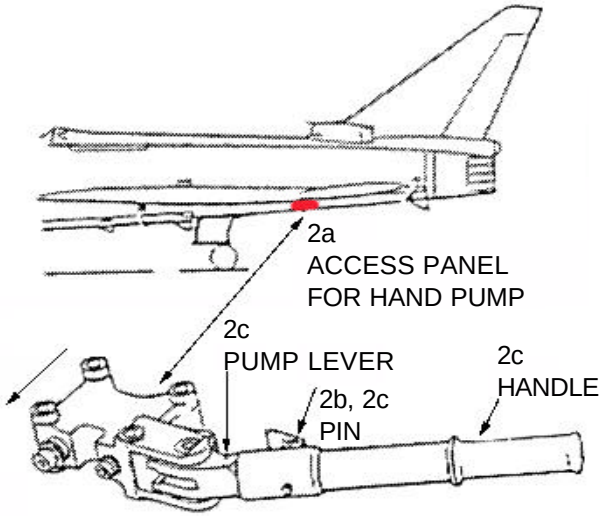

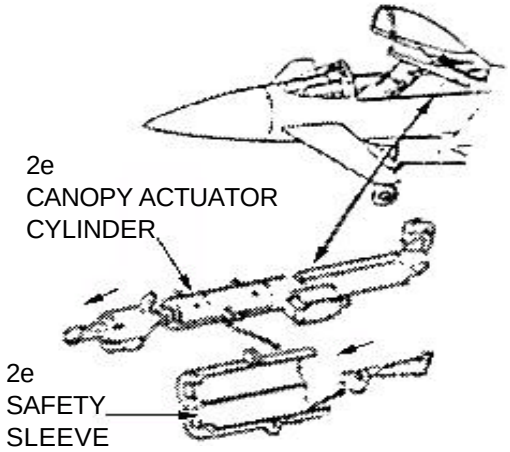

AIRCRAFT ENTRY - Continued

2. MANUAL ENTRY

NOTE:
If the canopy can not be opened electrically/ hydraulically and the situation does not demand an emergency opening, it can be unlocked and manually opened.

a. Canopy unlocking is accomplished by an unlocking red screw, located on the left canopy frame.

b. Turn unlocking screw 90 degrees to right using thump or common screwdriver (screw pups out 2cm).

c. After screw is turned, pull out screw all the way by using a puller. The puller is absolutely required for unlocking.

d. Make sure that the two locking bolts are completely unlocked. Canopy is now unlocked.

e. Push in access “BREAK IN” panel and pull out handle. Disengagement mechanism for piston rod head is activated via a lever.

f. Canopy can now be lifted manually by two people or by crane.

g. Install canopy support strut at canopy and canopy sill attach points.

WARNING

To avoid accidents, the canopy jettison system has to be made safe immediately after normal opening (electrically/hydraulic or manually) with the canopy jettison safety pin.

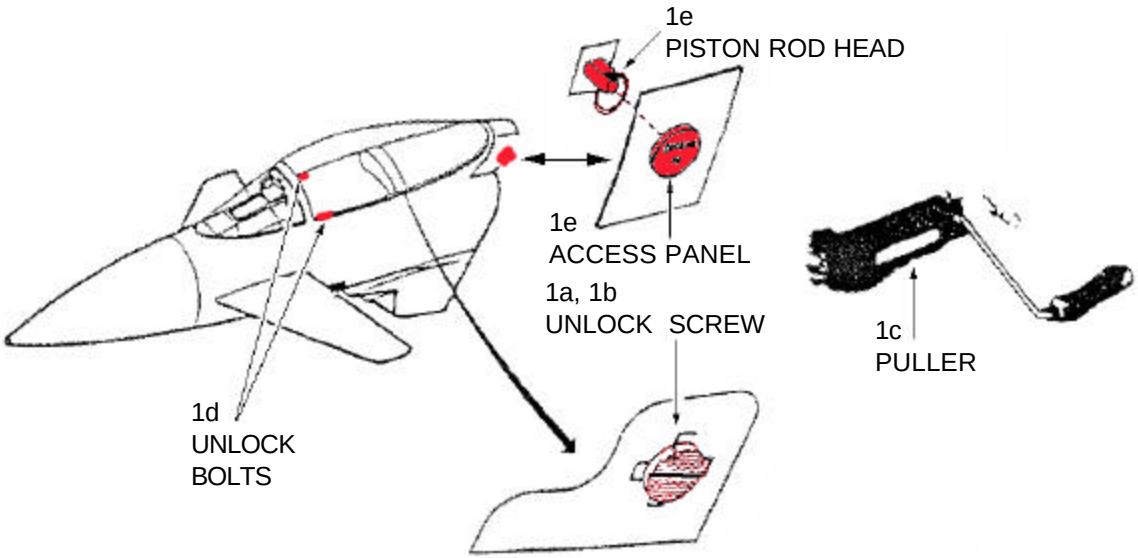

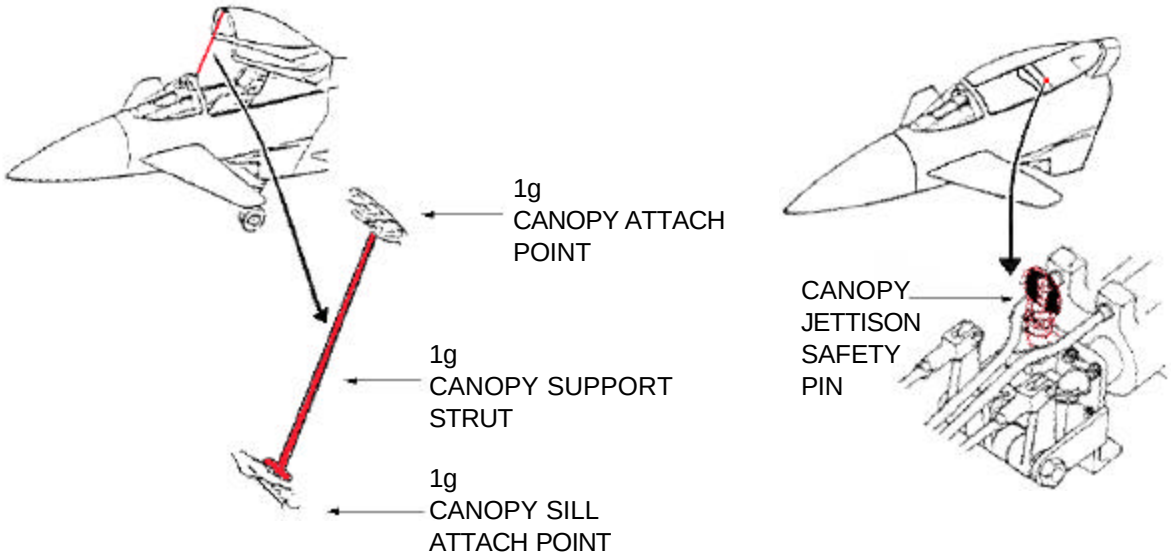

AIRCRAFT ENTRY - Continued

3. EMERGENCY ENTRY

NOTE:
Emergency opening of the canopy is only to be accomplished under dangerous situations (fire, explosion due to damage of aircraft, injury of pilot) dictates a rapid and unhindered rescue. The canopy can be pyrotechnically jettisoned with the canopy jettison handle (black/yellow), located behind the plexiglass disc on the left intake.

a. Break plexiglass disc to expose external canopy jettison handle.

b. Remove canopy jettison handle from retainer, extend cable 3 meters and pull handle hard. Canopy is jettisoned to the rear of the aircraft.

NOTE:
The canopy jettison dual initiator is used for jettisoning the canopy either by using the external or internal canopy jettison handles.

WARNING

The internal canopy jettison handle is NOT to be used for jettisoning the canopy during rescue due rescue personnel being too close to the canopy jettison rocket motors blast. Rockets are located at RH and LH forward corners of canopy. Death or injury can result from this ill advised action.

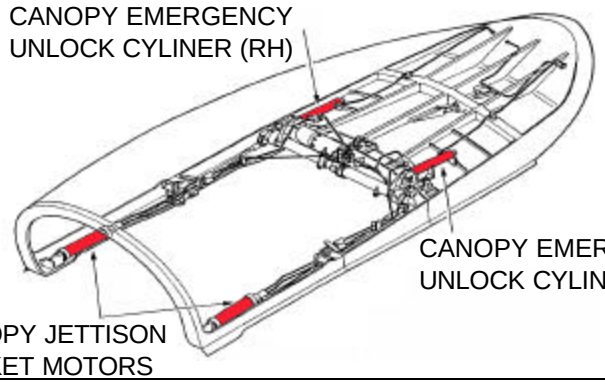

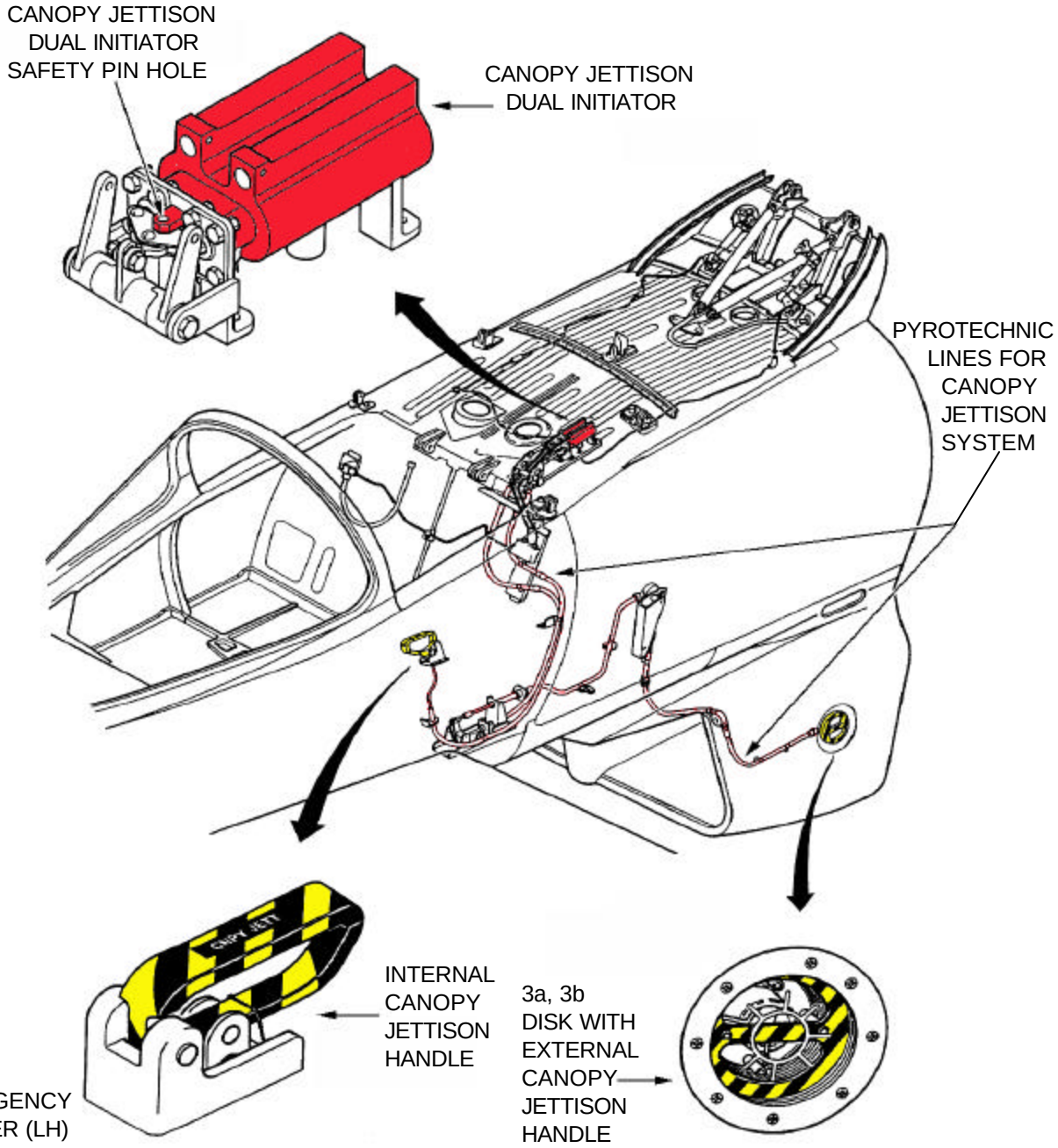

ENGINE SHUTDOWN

1. ENGINE SHUTDOWN

NOTE:
Engines can only be shutdown with electrical power available. Switch off battery only after engines have stopped.

a. Retard both throttles, located on left console, to IDLE position.

b. Raise idle release latches, located aft of throttles, and retard throttles to SHUT (final) position.

c. Position left and right fuel main shut-off valve switch, located on the right console, LP-COCKS each under red protective cover, to SHUT position.

d. If throttles are inoperative, engines must be shut down using the fuel main shut-off valve switches (LP COCKS).

e. After engines have stopped, place battery switches, located on right console, to OFF position.

NOTE:
DA 05 and DA 07 have only one battery switch.

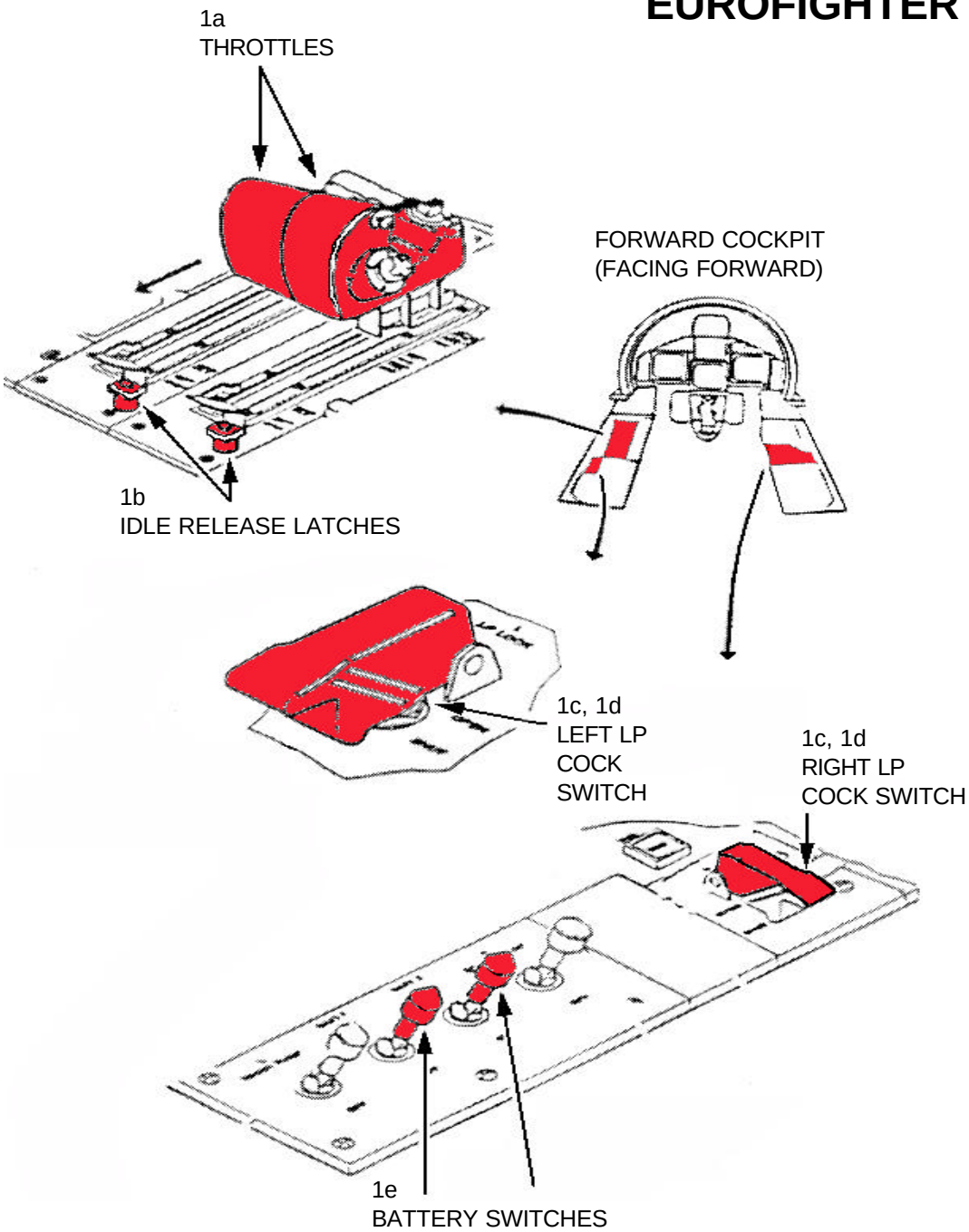

AIRCREW EXTRACTION

1. AIRCREW EXTRACTION

a. Receptacles for safety pins carried in flight are located at the right side console.

b. Safe the ejection seat using the safety handle, located on the right side of seat.

NOTE:
There are three positions for the safety handle. (1) ARMED (red/white striped), (2) SAFE (white) and (3) EGRESS (yellow).

c. Using right hand, push spring loaded lever in safety handle (handle is unlocked).

d. Move handle forward until it engages.

e. Visible part of handle is white labeled “SAFE”. Seat is now safe.

NOTE:
Safety pin for ejection handle will not be required in an emergency.

g. Install safety pin in the bottom left side of the ejection handle.

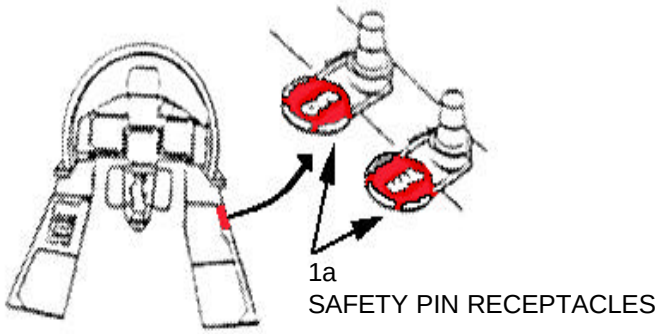

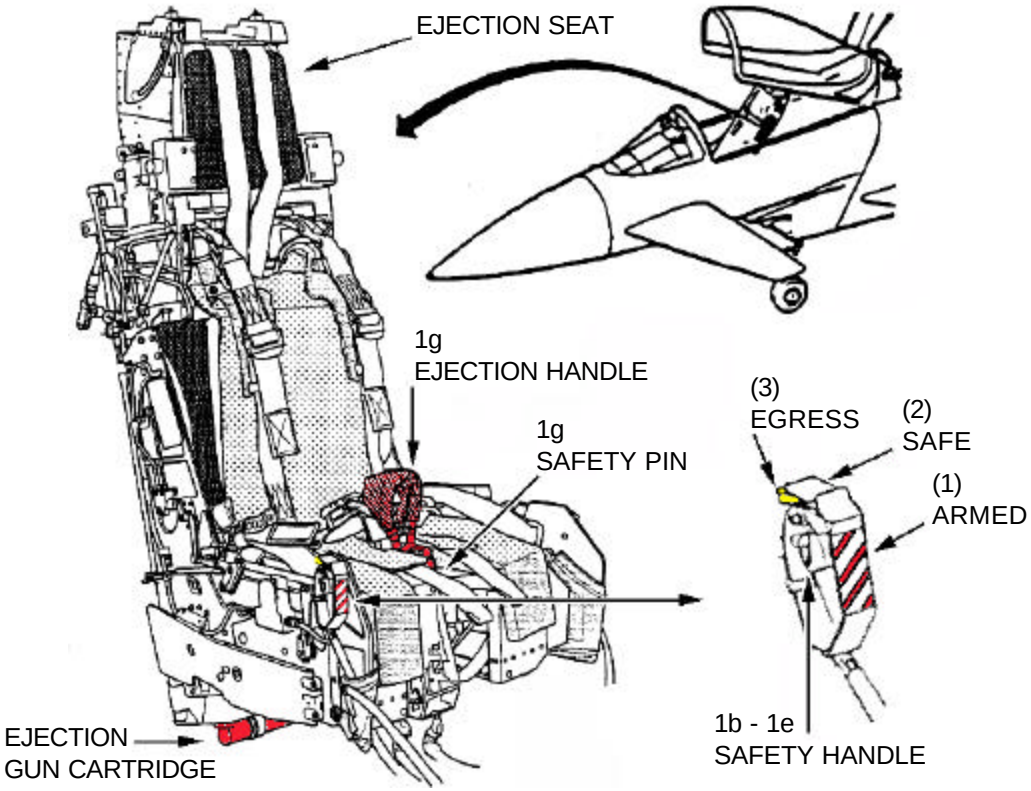

AIRCREW EXTRACTION - Continued

1. AIRCREW EXTRACTION - Continued

h. Disconnect oxygen mask from helmet, by using the left or right bayonet connectors, located at either side of lower mask.

WARNING

If oxygen mask is disconnected on left side of helmet, also disconnect MIC/TEL connection to helmet or pull mask sufficiently away from face.

NOTE:
The crewmember portion is connected at the handle to the crewmember's vest with a connecting line (on the left side of the seat pan).

i. There are two possibilities to disconnect the crewmember portion: (1) grip handle on pilot portion and pull forward strongly (2) automatically by connection line when pulling the crewmember from the aircraft.

NOTE:
During the rescue operation, the disconnected crewmember portion remains with the crewmember with all its supply lines. Leg restraints do not have to be disconnected.

j. Disconnect liferaft connecting line, located on left side in front of crewmember portion. There are two possibilities releasing the line from the connector: (1) Push springloaded lever in safety handle of ejection seat on right side and move yellow part labeled EGRESS forward to yellow mark on seat pan (2) connector is opened, line is released. Afterwards, move safety handle back again to its final position "SAFE".

k. Press both buttons on connector. Connector is opened and line is released.

l. Turn disc of quick release fitting, located at crewmember's mid section, clockwise to detent position and release by hitting or pressing disc. Eyelets of safety belt, shoulder harnesses and arm restraints are released.

WARNING

When lifting and extracting aircrew out of aircraft, make sure that crew's legs do not get caught between seat and airframe.

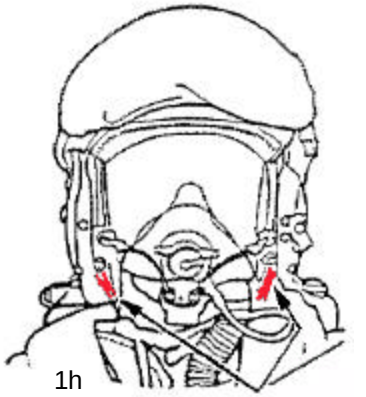

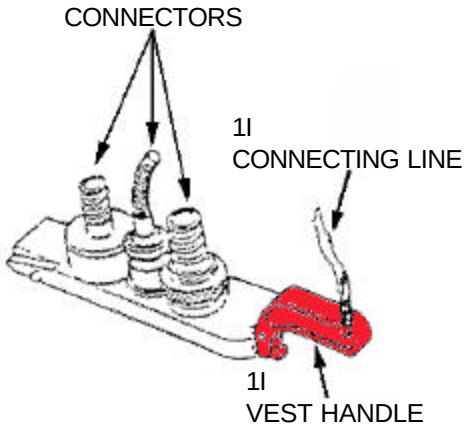

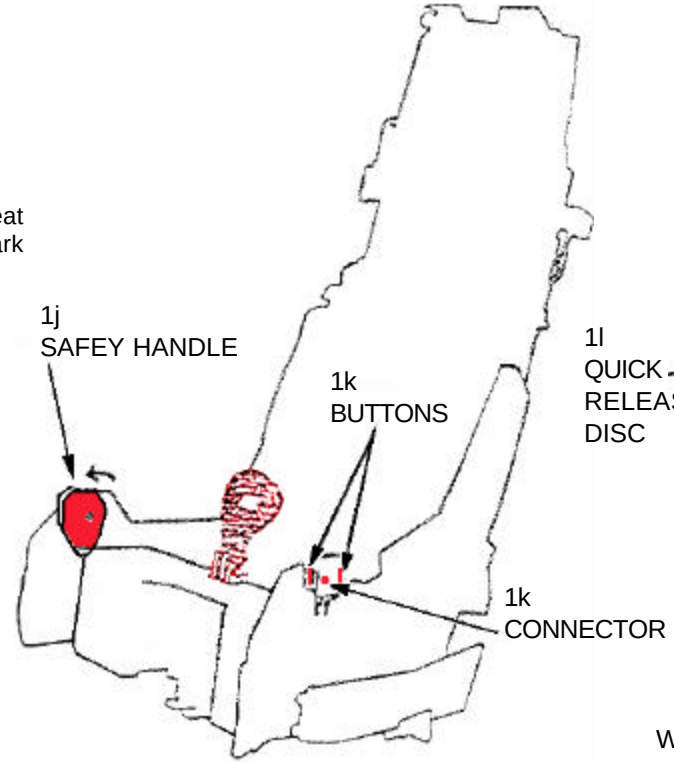

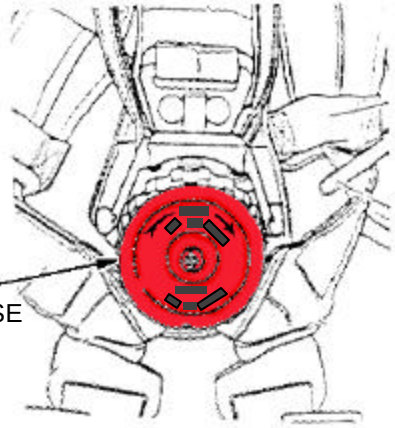

When lifting and extracting aircrew out of aircraft, make sure that crew's legs do not get caught between seat and airframe.

EJECTION SEAT COMPONENTS

A MULTIPURPOSE INITIATOR CARTRIDGE (2)
B SEAT INITIATOR CARTRIDGE (2)
C COMMAND BOOSTER CARTRIDGE (2, TWIN SEAT ONLY)
D BAROSTATIC BACK-UP UNIT CARTRIDGE
E HEADBOX DEPLOYMENT UNIT CARTRIDGE
F BRIDLE RELEASE CARTRIDGE
G HARNESS RELEASE CARTRIDGE
H HARNESS REEL CARTRIDGE
I DROGUE DEPLOYMENT UNIT CARTRIDGE
J TRIP ROD MECHANISM (2)
K EJECTION GUN AUXILIARY CARTRIDGE (2)
L AEROSURFACE DEPLOYMENT CARTRIDGE
M EJECTION GUN CARTRIDGE
N UNDERSEAT ROCKET MOTOR
O THERMAL BATTERIES (2)

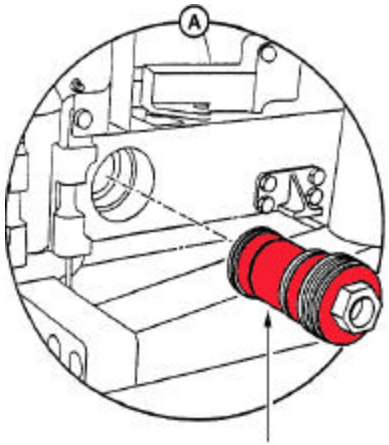

MULTIPURPOSE INITIATOR CARTRIDGE

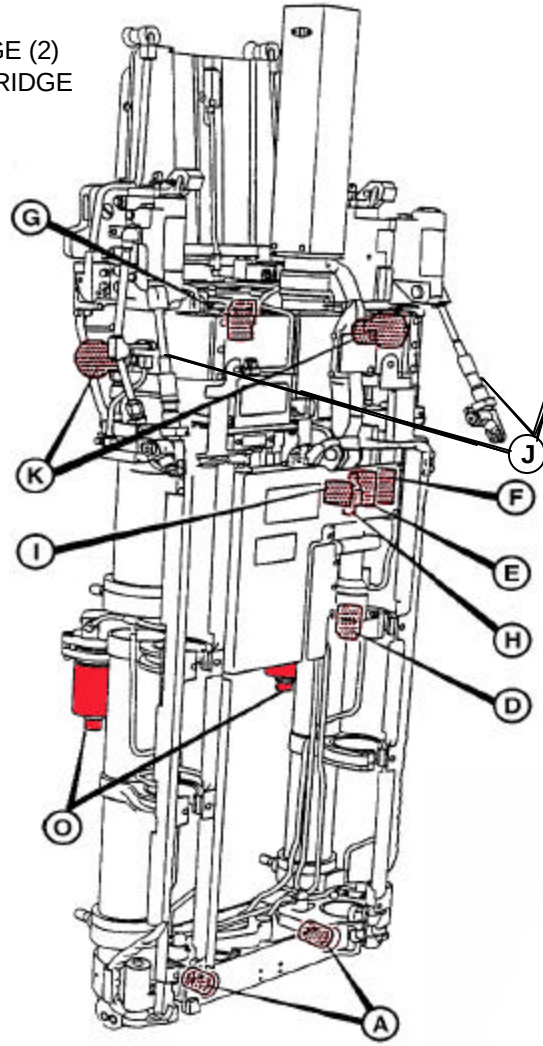

REAR VIEW

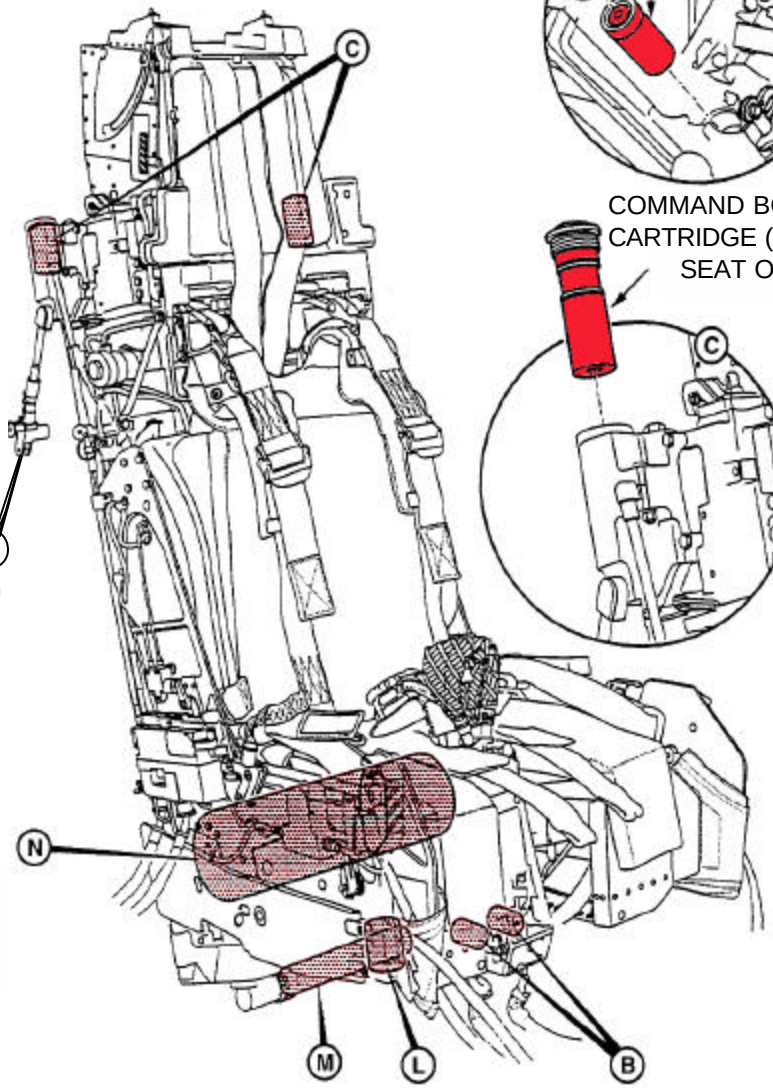

SEAT INITIATOR CARTRIDGE

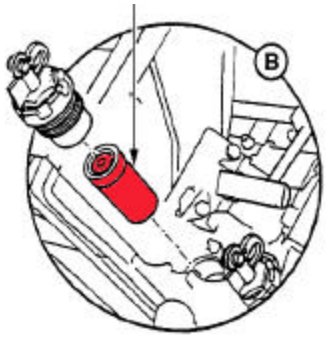

COMMAND BOOSTER CARTRIDGE (2, TWIN SEAT ONLY)

AIRCRAFT INTEGRATED MONITORING AND RECORDING SYSTEM

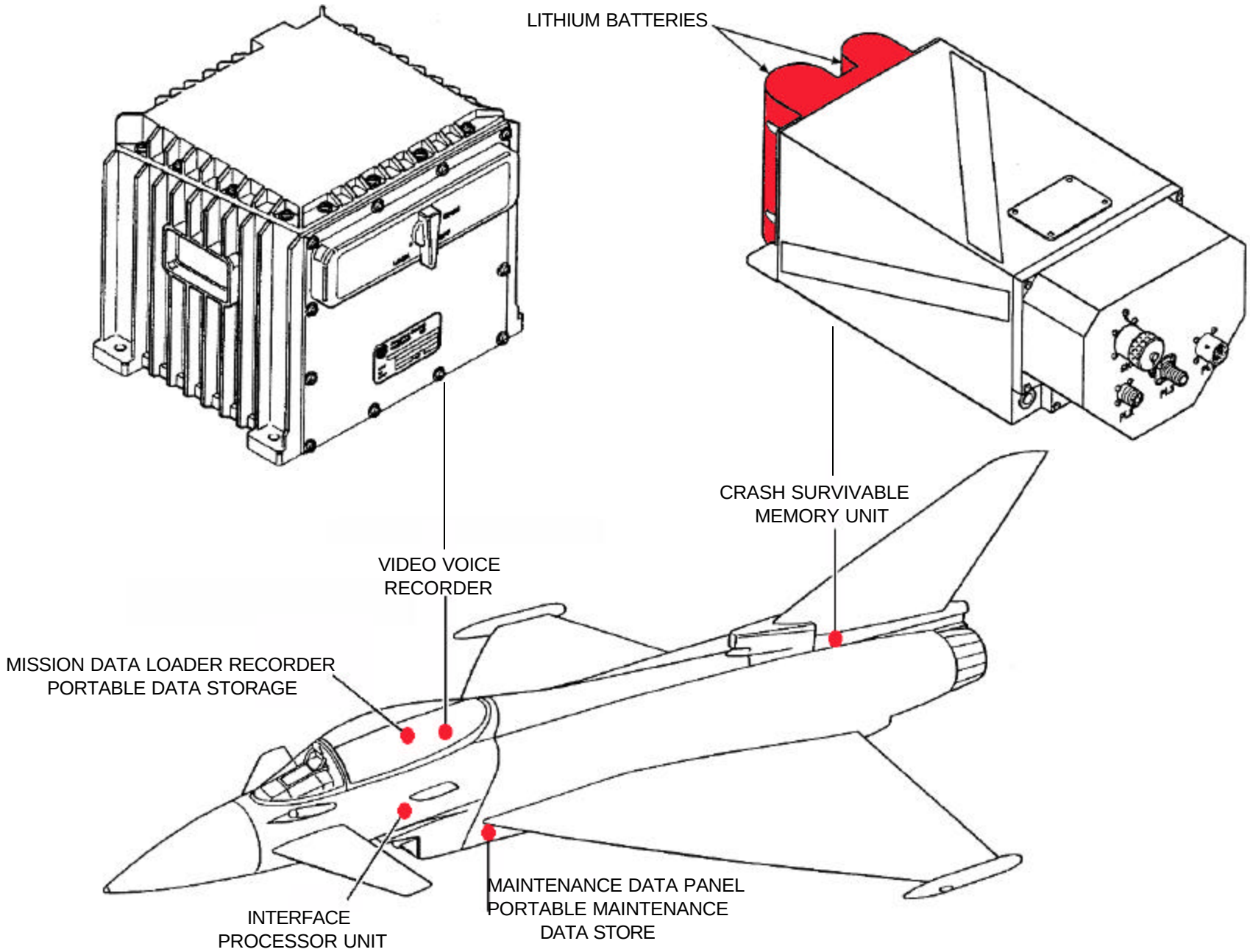

AIRCRAFT RECOVERY INFORMATION

EUROFIGHTER 2000

1. SAFETY MEASURES AFTER RESCUE OPERATION

a. For the DA 01 model, access the two batteries through the respective access panels. Panels are installed with screws. The location of the batteries are (1) under the radome and (2) lower center fuselage near to left wing root. To disconnect battery, turn (red) knob counterclockwise until separated.

b. For the DA 05 and 07 models, access the single battery through the respective access panel. Panel is installed with screws. The battery location is at the lower center fuselage near to left wing root. To disconnect battery, turn (red) knob counterclockwise until separated.

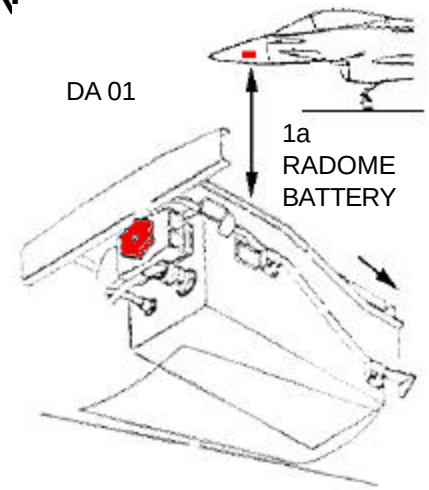

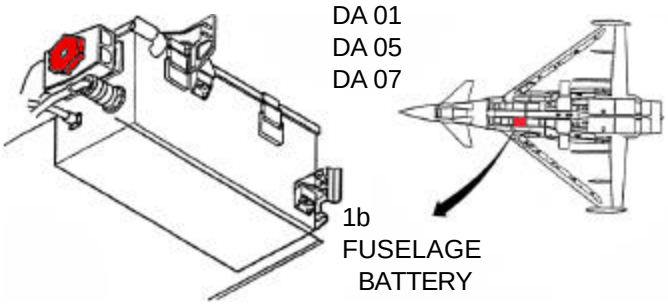

2. SAFE LANDING GEARS

NOTE:
Safety pins are not carried during flight.

a. Insert safety pin for nose landing gear (NLG)into opening from aircraft right to left.

b. Insert safety pins for RH and LH main landing gear (MLG) into openings from aircraft right to left.

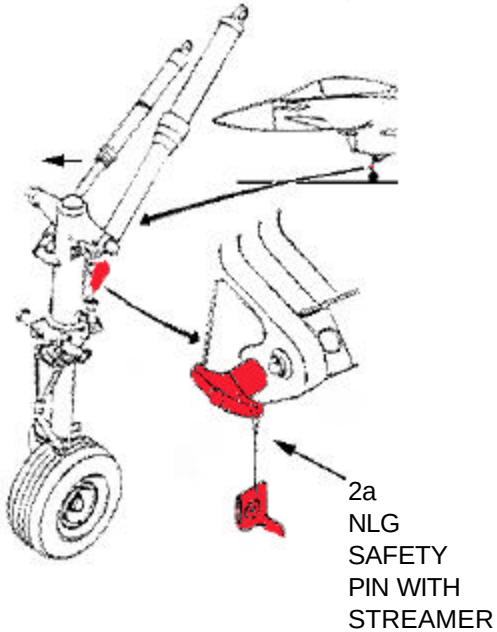

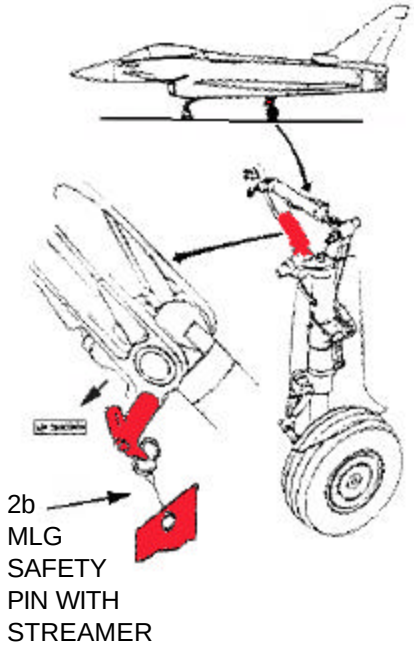

AIRCRAFT RECOVERY INFORMATION - Continued

3. TOWING

a. Aircraft can be towed using a Tornado tow bar.

WARNING

During aircraft lifting/hoisting, pay attention to the aircraft pitch attitude, it must be horizontal. Avoid all manoeuvres that may cause external damage to the aircraft or its moveable parts.

4. RECOVERING WITH HOISTING TOOL

a. In case of failure at one or more landing gear, or when towing manoeuvre is not possible, a lift/hoist tool has to be used to handle the aircraft.

b. After removal of covers and dedicated adapters are installed in the four lifting/hoisting points, hoist the tool by a suitable hook and lift the aircraft up to a dedicated area. In order to maintain the aircraft in a levelled condition, the length of the cable can be optimized.

5. RECOVERING WITH A GENERIC TOOL

a. As an alternative to the dedicated/prescribed hoisting tool, a generic tool can be used. It consists of two strips of synthetic material and it has to be located at the root of the wing near to the fuselage in both front and rear position.

b. Then the four strip ends have to be connected together by a ring where the lifter hook will be inserted to move the aircraft where necessary.

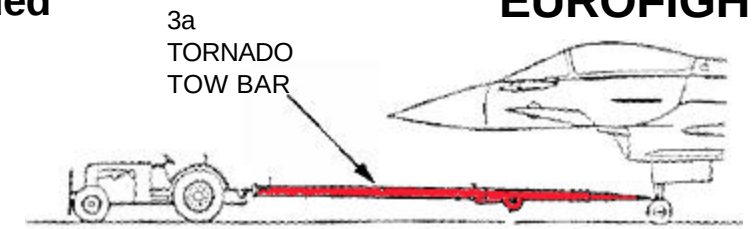

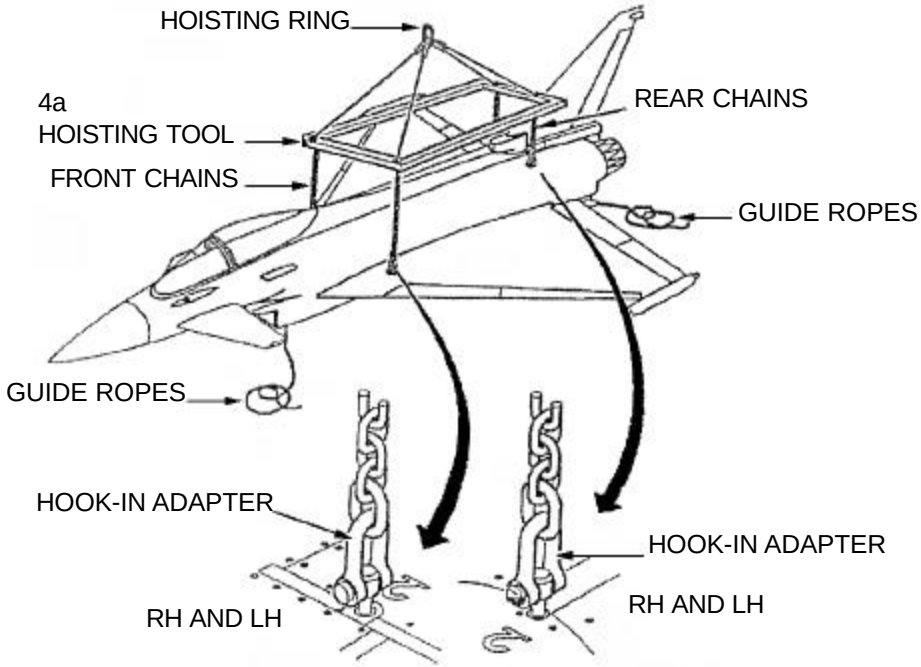

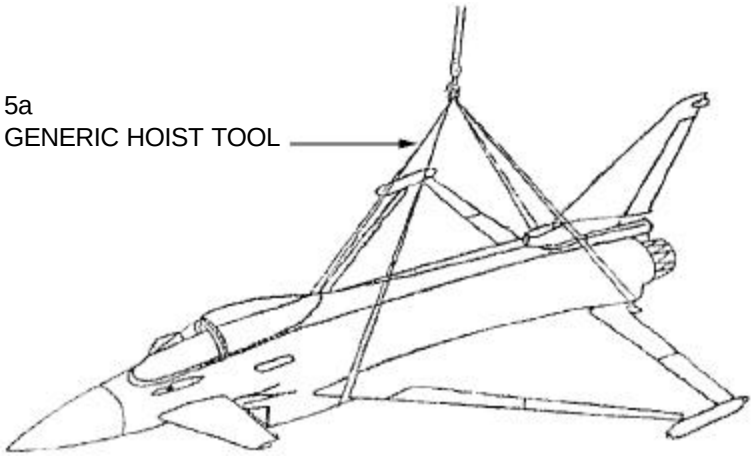

AIRCRAFT HAZARDS

OTHER HAZARDS:
Aircraft Assisted Escape System
Asbestos
Cartridge operated equipment
Composite Materials (Man-made mineral fibers)
Ejector release units
Fluorolastomers (Burnt seals)
Ground Illuminating Flare Dispenser
Miniature Detonating Cord (MDC)
Niemonic Steel (Heat shields)
Polytetrafluoroethylene
Potasium Hydroxide
Sonar locator beacon(s) (2-Lithium battery)
Strotium Chromates
Windshield Wash Fluid AL-36
Fuel: JP-8
Hydraulic oil: MIL-H-5606
High pressure gases: Nitrogen/Air
Engine oil: O-156
Oxygen: Gaseous
Oxygen: Cylinders mounted on ejection seats

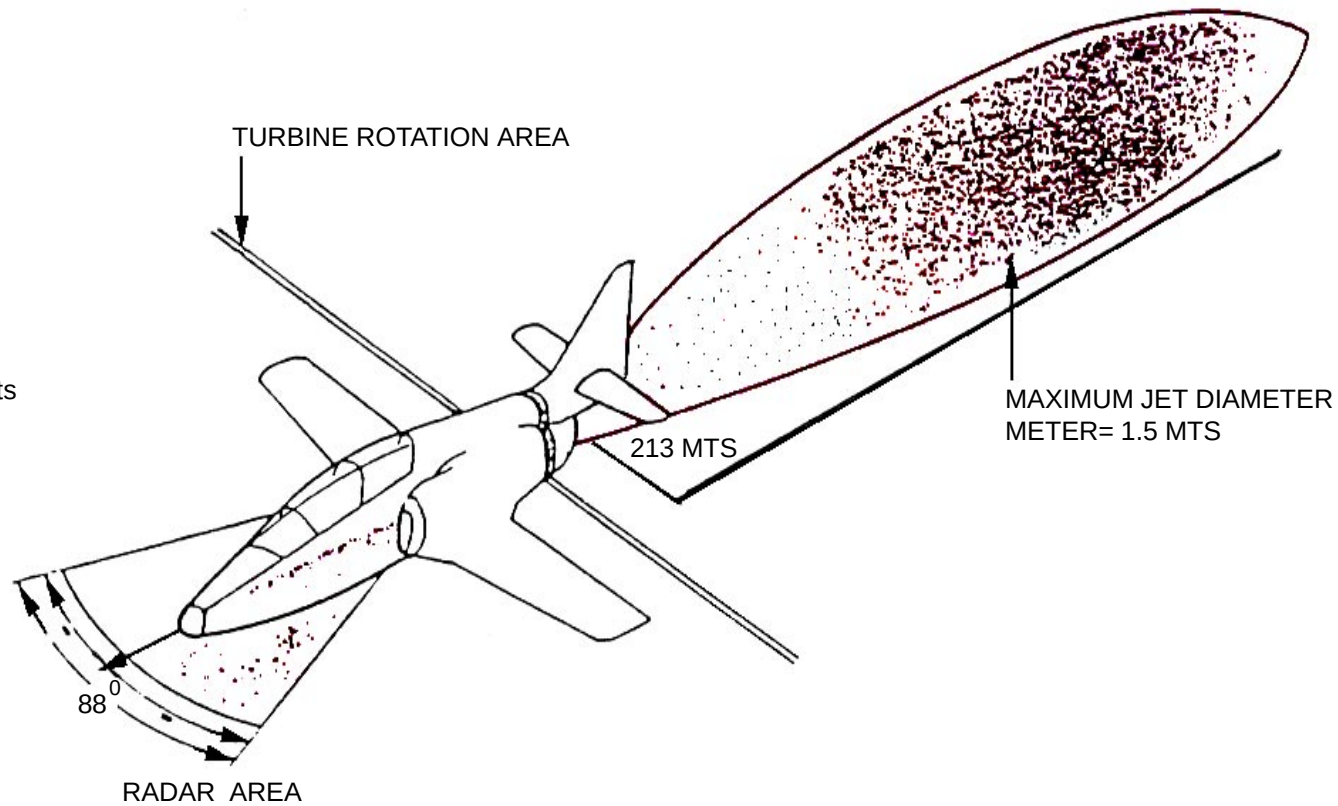

DANGEROUS AREAS WHEN
ENGINE IS IN OPERATION

E-25 CASA 101

SPECIAL TOOLS/EQUIPMENT
Power Rescue Saw
Crash Ax

AIRCRAFT ENTRY

1. NORMAL ENTRY

a. Press external canopy opening controls for forward and aft canopies.

b. When levers protrude, turn levers counterclockwise to unlock and open canopies.

c. Actuate internal canopy open control levers to release overpass locker and pull backwards.

2. EMERGENCY ENTRY

a. Access emergency canopy controls by breaking canopy control glass panel.

b. Press latch and open emergency canopy control door to expose emergency canopy handle.

c. Pull emergency control handle 2 meters (6 feet) out to break canopy glass frame.

3. CUT-IN

a. Cut-in canopy glass as required.

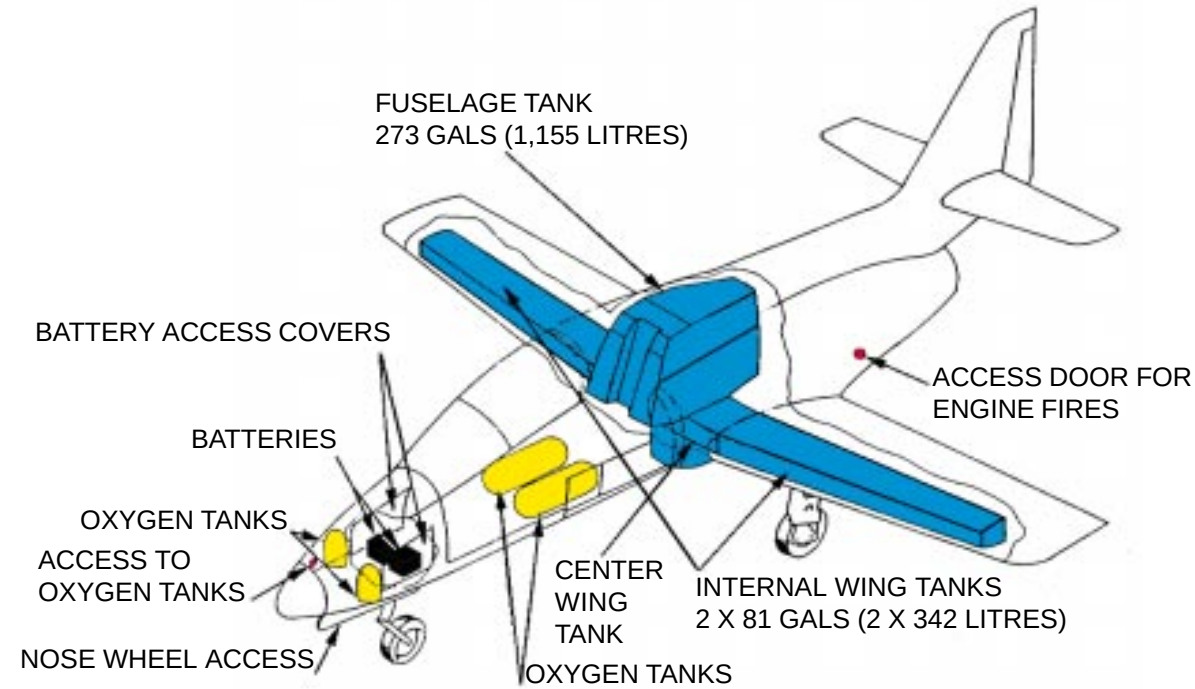

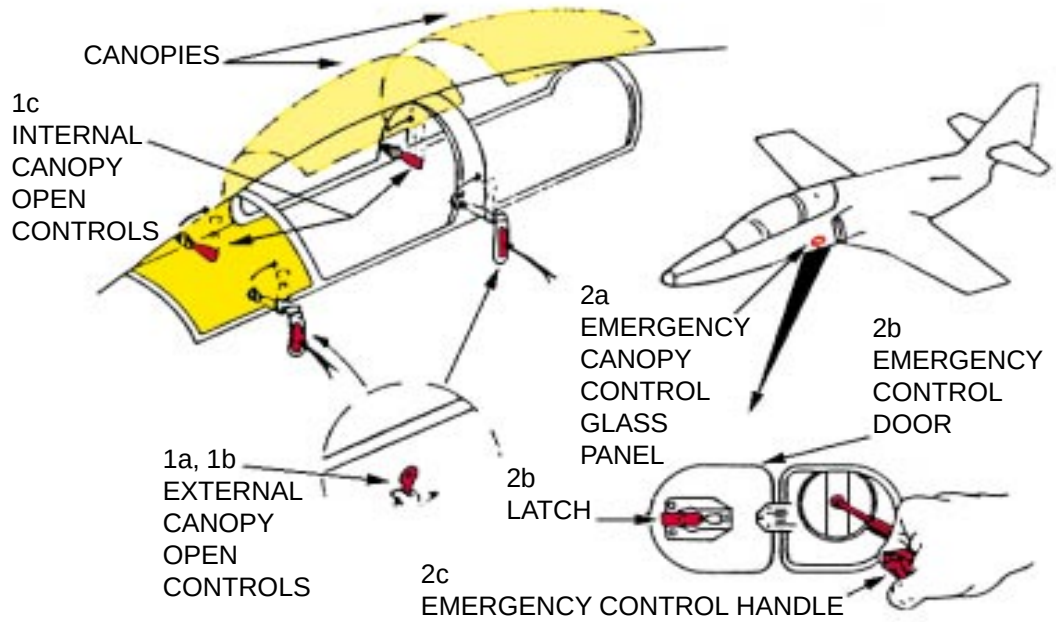

ENGINE SHUTDOWN

1. ENGINE SHUTDOWN

a. Set throttle, located in forward cockpit on left console, to SHUT DOWN position.

b. Push fuel switch, located in forward cockpit forward of throttle on left console, to OFF position. Fuel light will come illuminate.

c. Set battery toggle switch, located in forward cockpit forward right console, down to OFF position.

d. Close oxygen levers, located on right console in both cockpits, by pulling aft.

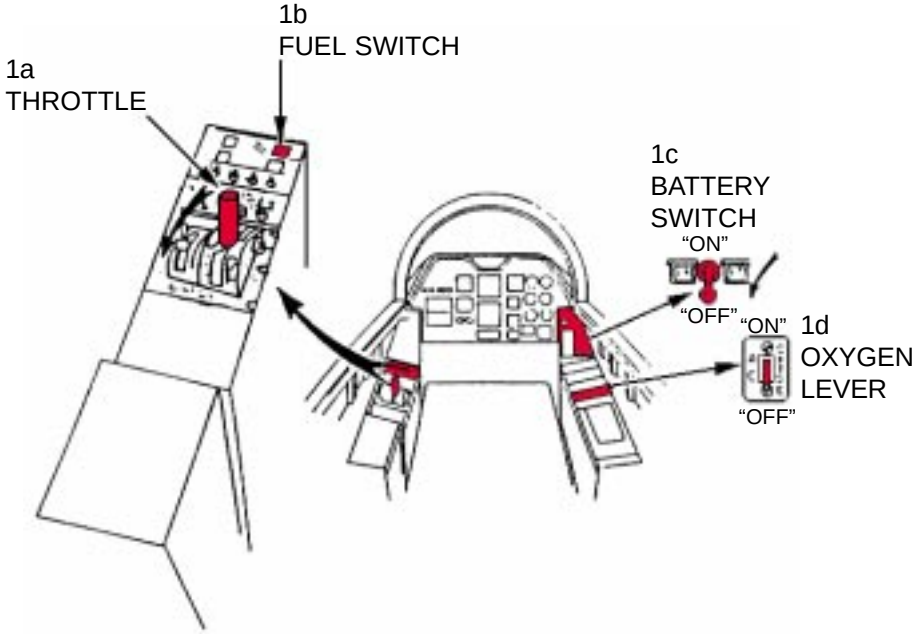

AIRCREW EXTRACTION

1. AIRCREW EXTRACTION

a. Insert safety pin in safety pin hole, located on forward edge of seat pan, to safety the ejection control handle.

b. Turn lock and press to release lap belt and harness restraints. Set harnesses aside to prevent entanglement during extraction.

c. Disconnect personal equipment and leg restraint garters by pressing top side of control, located at lower left corner of seat bucket, and pulling upwards.

d. Disconnect survival kit from pilot's equipment by pressing side tabs in left side strap buckle.

e. Extract pilot by armpits and hand him over the left side of the fuselage carefully to rescue personnel.

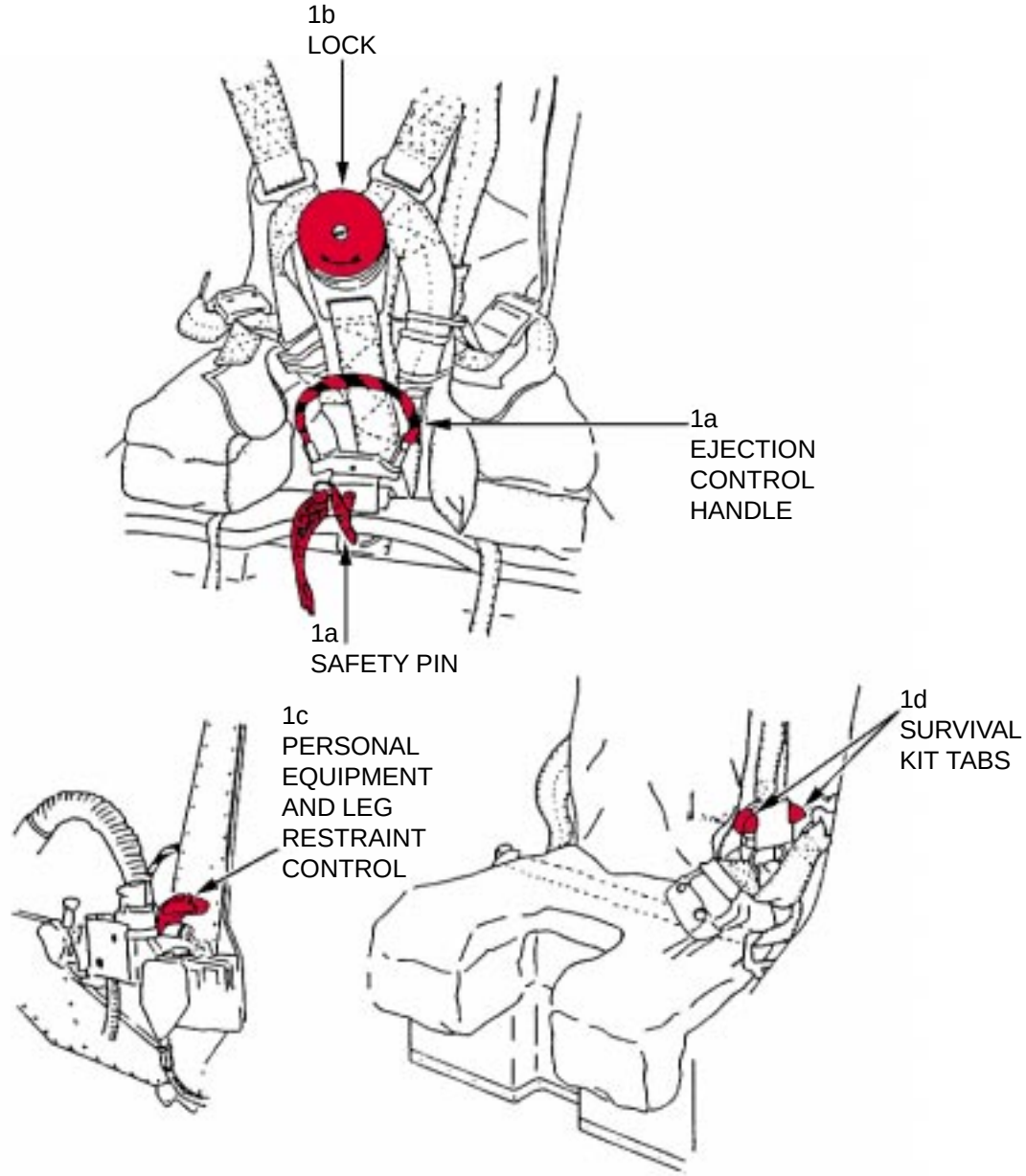

The aircraft information is located in Chapter 8
containing US Air Force aircraft.

F-5

The aircraft information is located in Chapter 8
containing US Air Force aircraft.

The aircraft information is located in Chapter 8
containing US Air Force aircraft.

The aircraft information is located in Chapter 19
containing US Navy aircraft.

AIRCRAFT SKIN PENETRATION POINTS

WARNING

In the drone configuration (unmanned), do not attempt to use the skin penetrator agent applicator or Fire Drill II. In the unmanned configuration, the aircraft is equipped with a self-distruction mechanism.

Avoid penetrating the right engine bay due to the concentration of electrical wiring and hazardous substances.

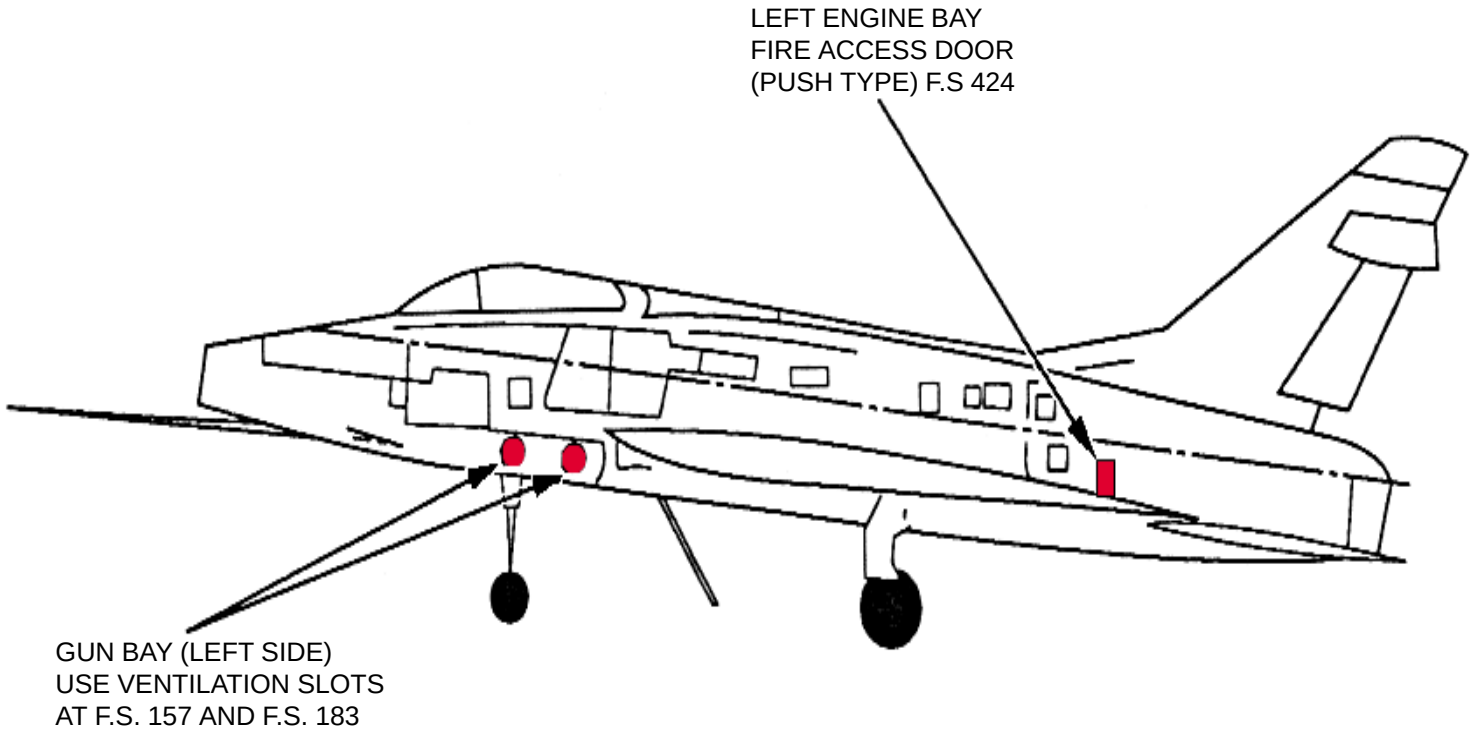

SPECIAL TOOLS/EQUIPMENT
Power Rescue Saw
Dearming Tool
Fire Drill II

AIRCRAFT ENTRY

1. NORMAL ENTRY

a. Press canopy external switch open, located on left side of fuselage forward of canopy, then raise canopy to FULL OPEN position.

2. MANUAL ENTRY

a. Unlatch canopy manual release handle, located on both sides of canopy, and move canopy aft approximately one inch to release canopy locks.

b. Lift canopy at forward end, push up and aft until canopy has locked in OPEN position.

3. EMERGENCY ENTRY

a. On some F-100D and F models, pull external canopy jettison T-handle, located on left side below canopy, approximately 6 feet to jettison canopy.

NOTE:
F-100A, C, and early D models not equipped with canopy jettison device.

WARNING

When access to cockpit has been gained, check position of ejection seat handgrips.

4. CUT-IN

a. Cut canopy along canopy frame on all four sides.

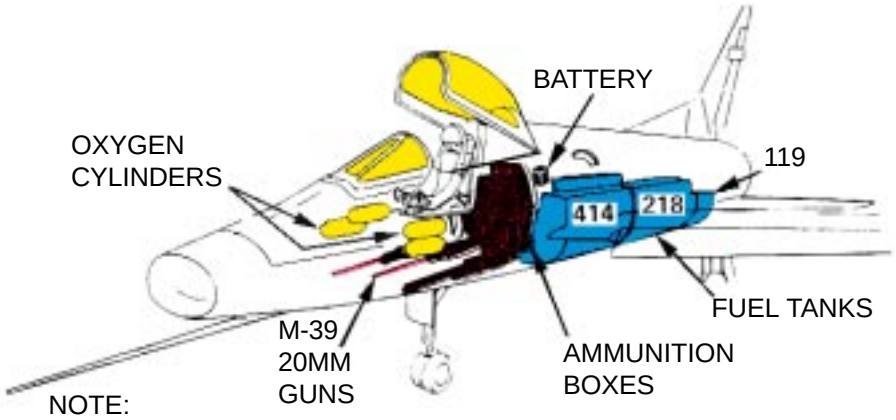

NOTE:
All models have 4 20MM guns except F model which has only 2.

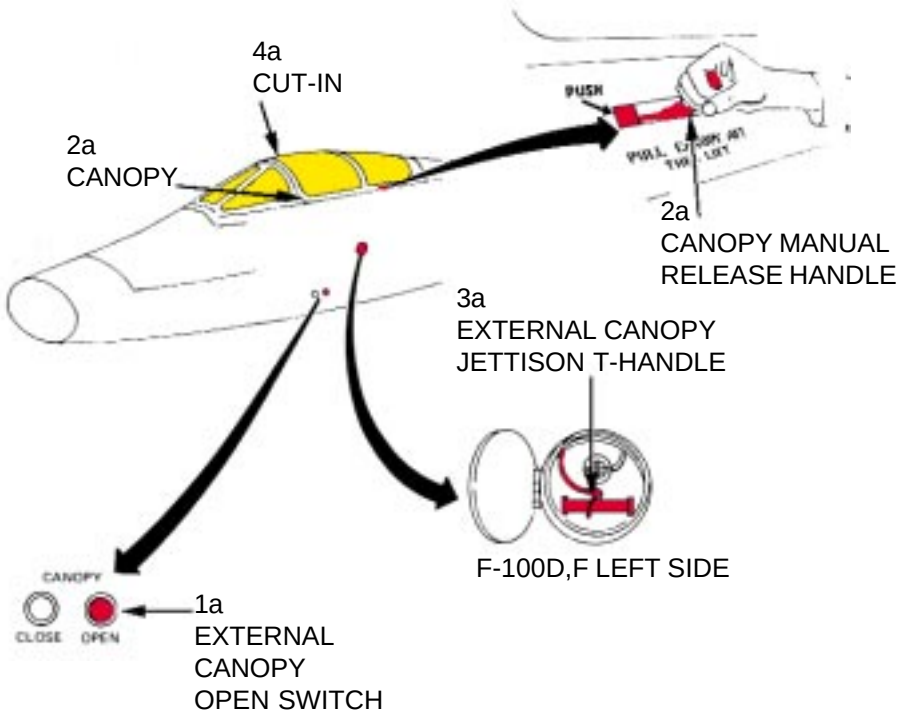

ENGINE SHUTDOWN

1. ENGINE SHUTDOWN

a. Retard throttle, located center of left console to IDLE, then move outboard and aft to OFF position.

b. Place engine master switch, located on engine and flight control panel, left console, to OFF position. (Either cockpit on F models.)

c. Place fuel shutoff valve switch in OFF position. (Either cockpit on F models.)

d. Place battery switch, located on electrical panel, right forward console, to OFF position.

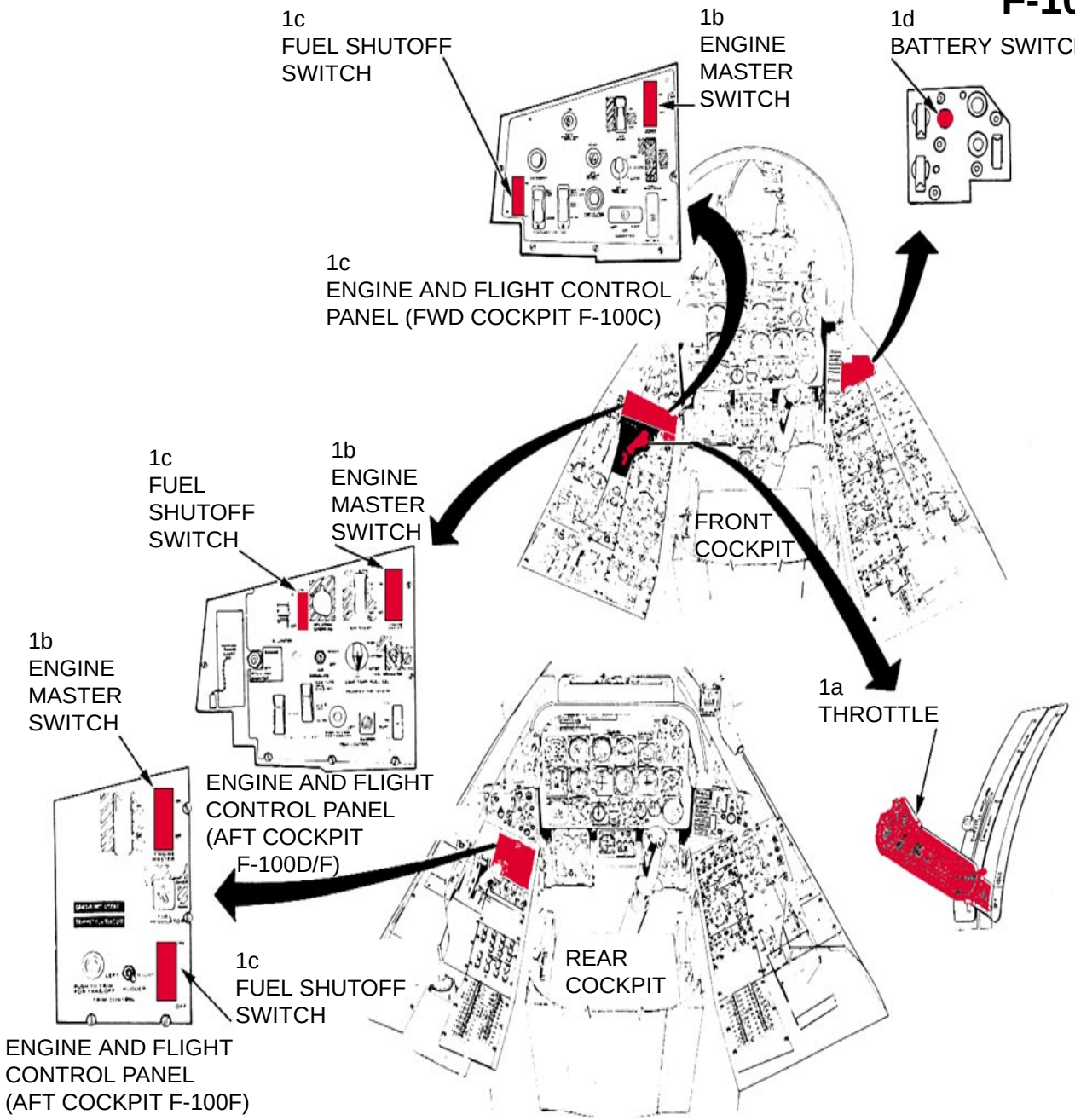

EJECTION SEAT SAFETYING AND AIRCREW EXTRACTION

1. EJECTION SEAT SAFETYING

a. Insert ground safety pin in right handgrip.

WARNING

Safety pins installed in the aft crewmember's seat will not prevent the seat from being ejected if an ejection sequence has been initiated from the pilot's seat.

2. EMERGENCY EJECTION SEAT SAFETYING

a. Cut ballistic hoses, located top right side of seat, on F model both seats.

b. Cut ballistic hose, located on top left side of seat, on D model seat.

3. AIRCREW EXTRACTION

a. Rotate lap belt release and remove shoulder harness from crewmember.

b. On HBU-12/A lap belt, squeeze together the black and silver grips of the handle and lift up.

c. Separate lap belt and remove the gold key.

d. Remove shoulder harness/negative "G" restraint strap loop ends.

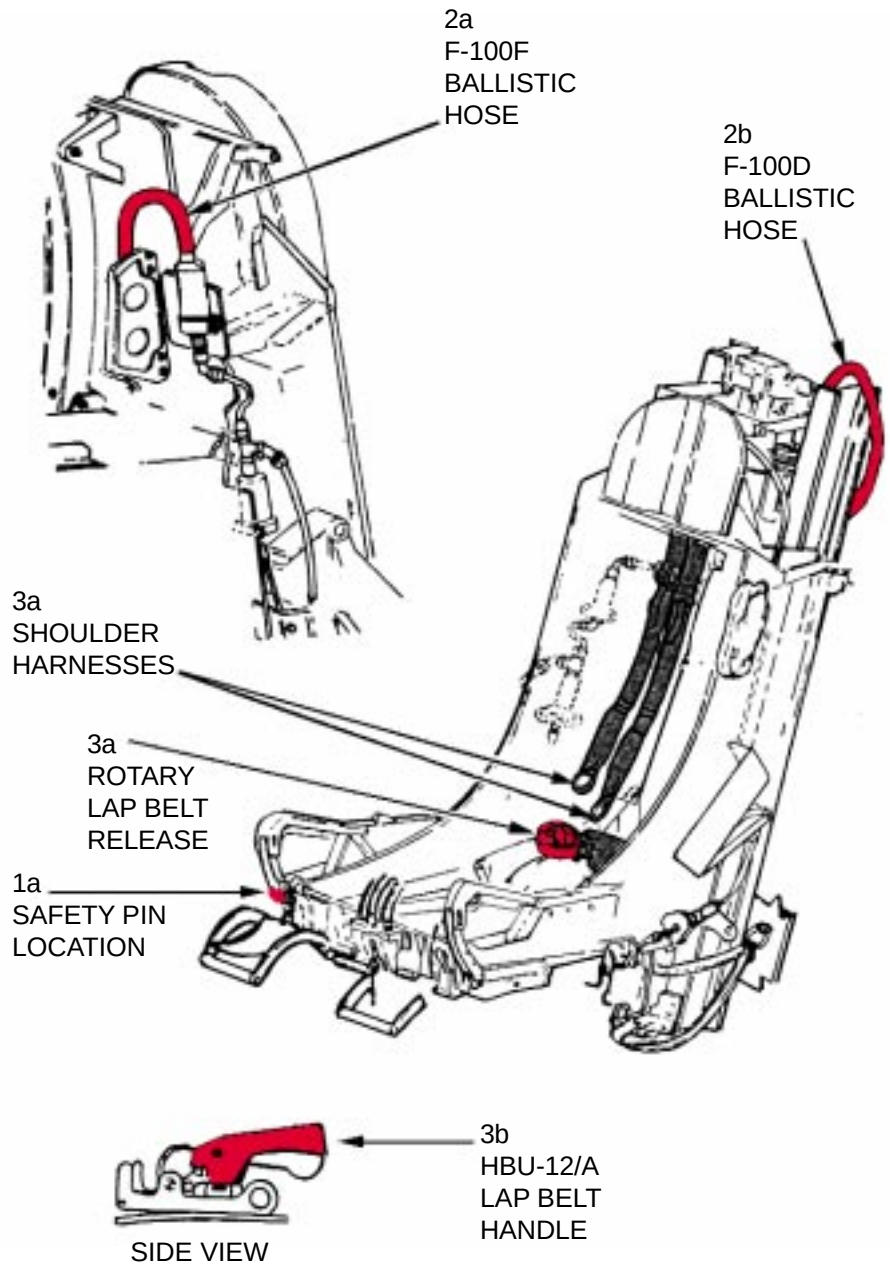

SPECIAL TOOLS/EQUIPMENT
Power Rescue Saw
Dearming Tool

AIRCRAFT ENTRY

1. NORMAL ENTRY

a. Push on release at lower end of external locking lever located on right side of fuselage below windshield.

b. Rotate locking lever clockwise to open canopy.

2. EMERGENCY ENTRY

a. Push button on access door, located left side of fuselage below forward canop.

b. Pull canopy jettison T-handle out approximately 6 feet to jettison canopy.

WARNING

On TF-104 aircraft when canopy jettison T-handle is pulled, the forward canopy will jettison instantaneously and the aft canopy, three seconds later.

3. CUT-IN

a. Cut canopy along canopy frame on all four sides.

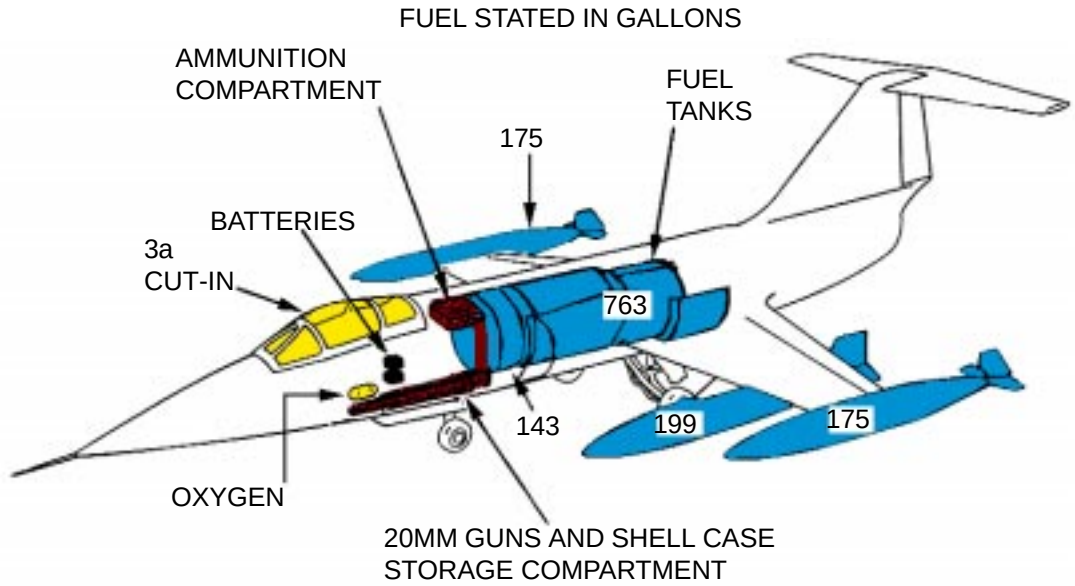

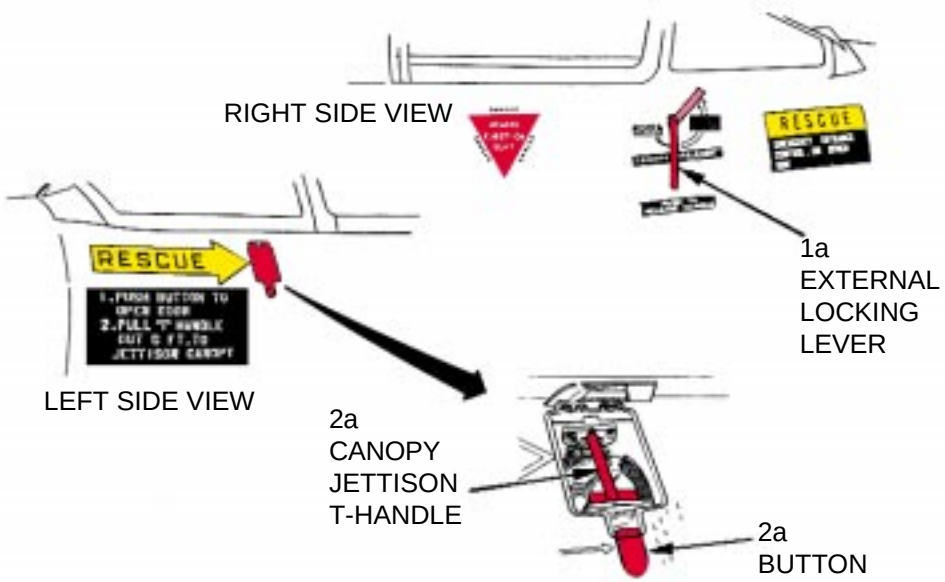

ENGINE SHUTDOWN

1. ENGINE SHUTDOWN

a. Retard throttle, located on left console to IDLE, then move throttle outboard to CUT-OFF position.

b. Place fuel shutoff switch, located on left side console, to OFF position.

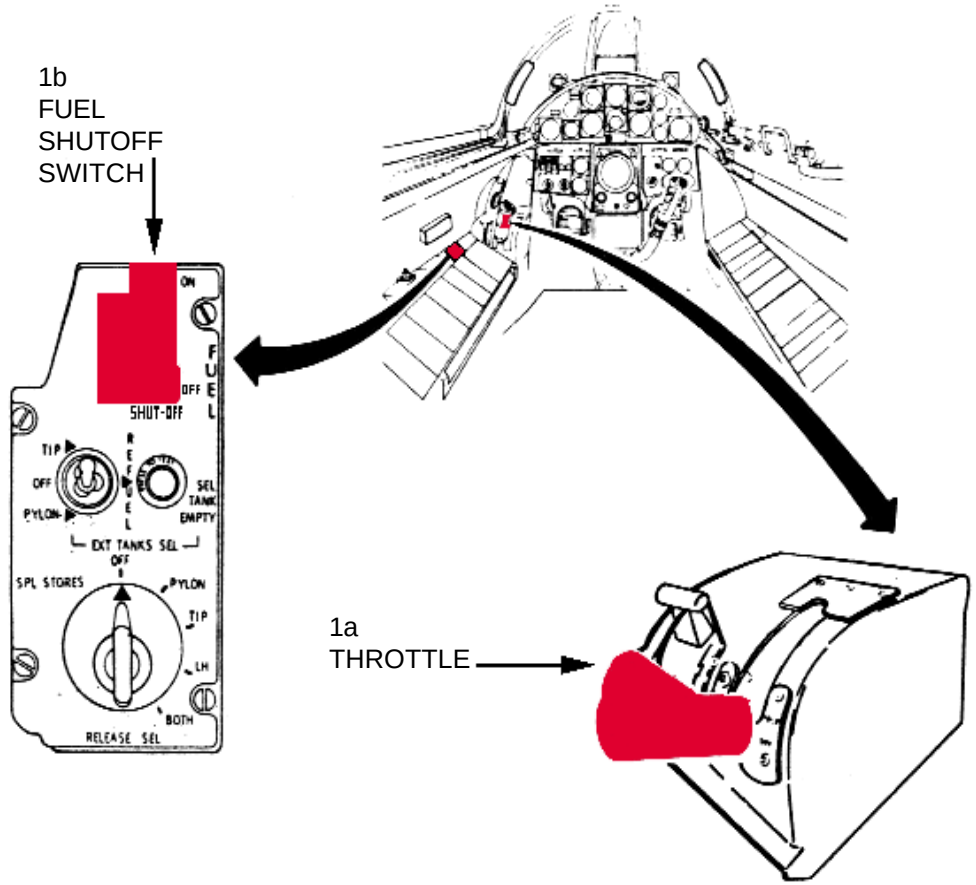

EJECTION SEAT SAFETYING AND AIRCREW EXTRACTION

1. EJECTION SEAT SAFETYING FOR F, RF, AND TF-104G

WARNING

If crewmember(s) are equipped with force deployment type parachute, pull quick disconnects located on right side of seat to safety the parachute.

a. Insert safety pin into sear of the ejection gun, located on top aft of seat, to safe top charge mechanism.

WARNING

Be sure NOT to rotate banana links when installing safety pin. Death or injury will result.

b. Insert safety pin in primary firing handle located above headrest.

c. Raise lower or secondary ejection handle guard to safe secondary ejection handle.

2. AIRCREW EXTRACTION

a. Pull safety snap from harness quick release box. Rotate outer assembly 1/4 turn clockwise and strike firmly to open.

b. Squeeze release device on pilot's sash, located lower left side to release the dinghy line.

c. Lift up on release handle, located lower left side of ejection seat to release pilot's half of PEC disconnect.

d. Rotate leg line release lever, located on lower left side of seat, aft to release leg restraint lanyards.

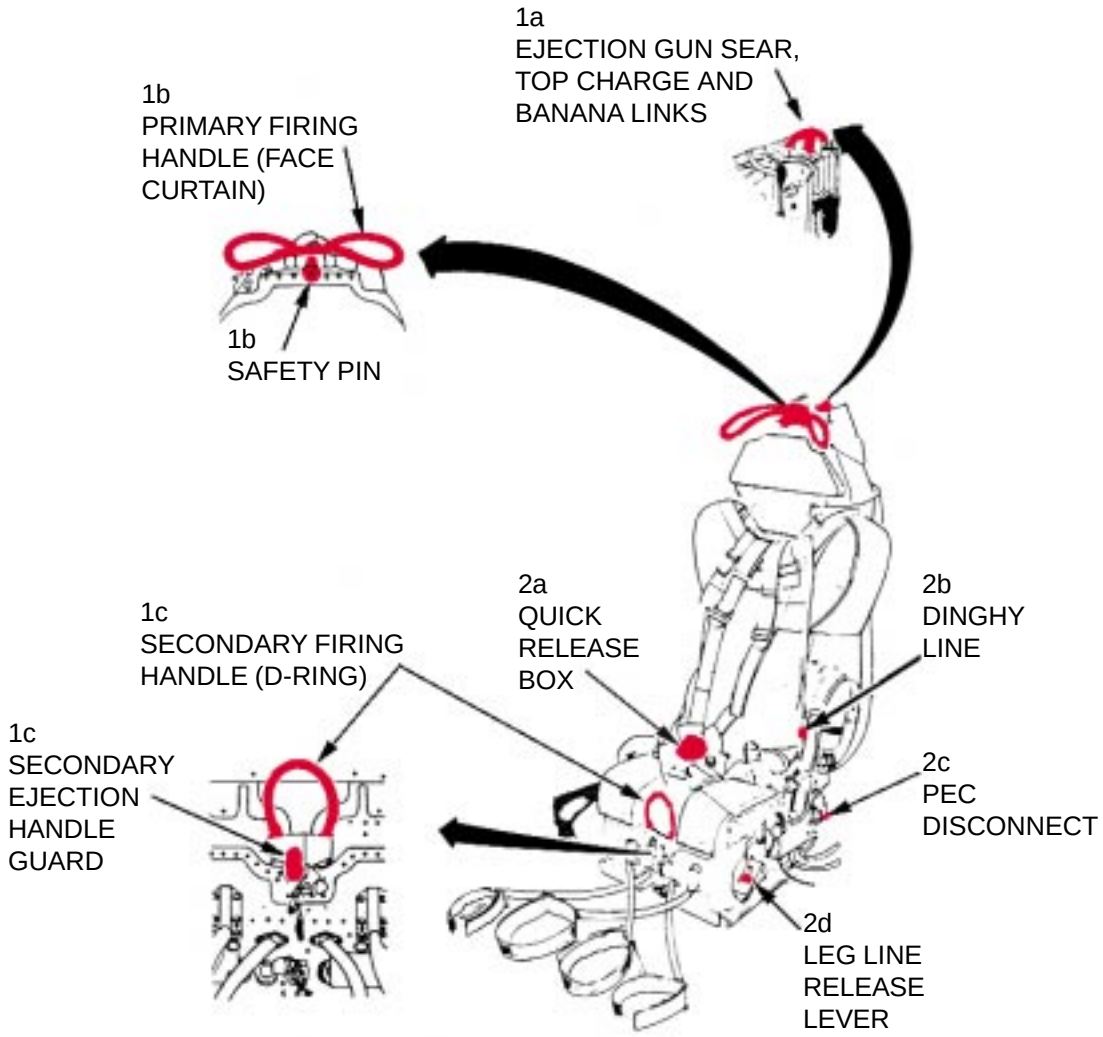

AIRCRAFT HAZARDS

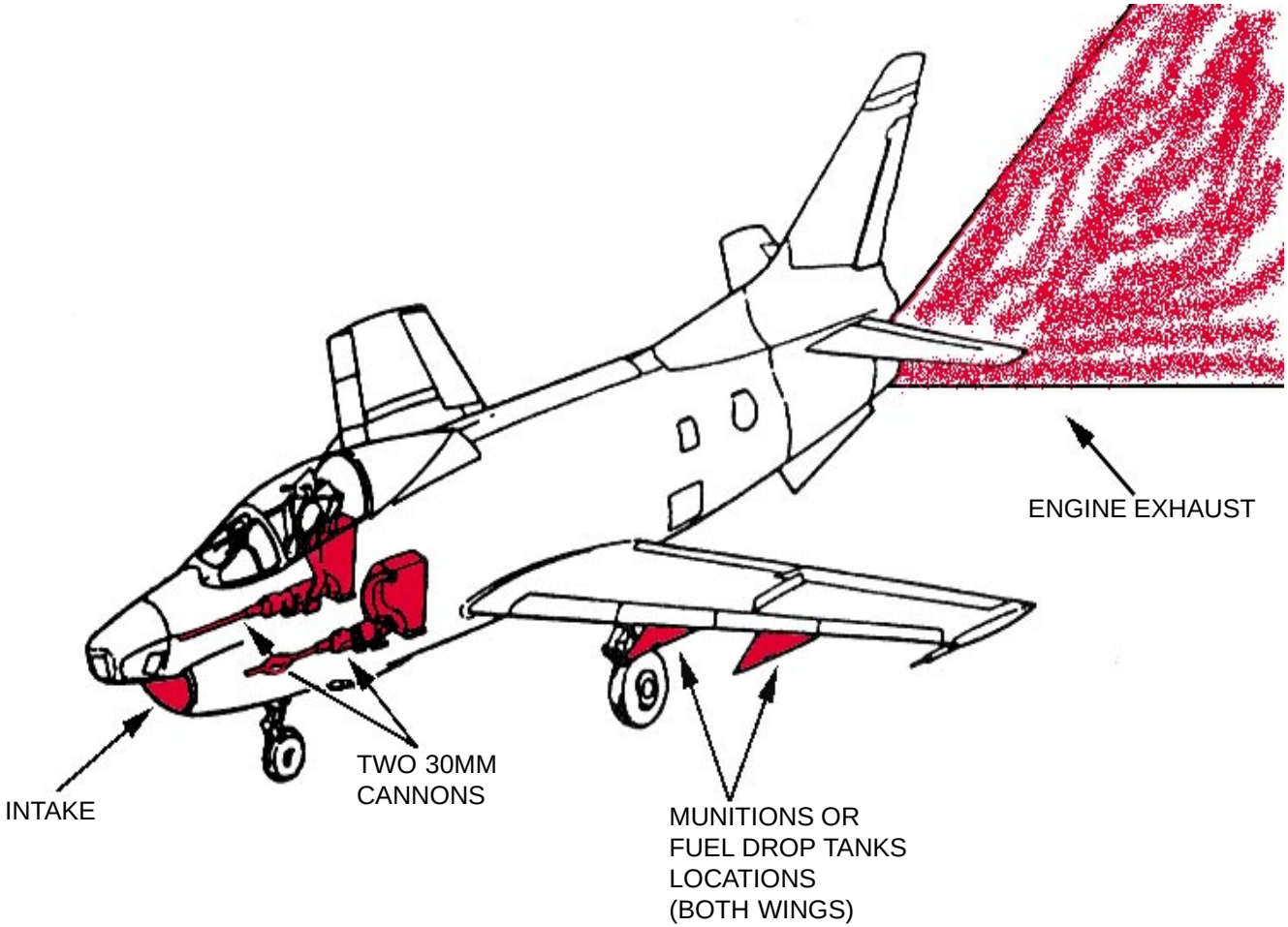

SPECIAL TOOLS/EQUIPMENT
Power Rescue Saw
Crash Ax

AIRCRAFT ENTRY

1. NORMAL ENTRY

a. Push external canopy switch, located on left side of fuselage, to OPEN position.

2. EMERGENCY ENTRY

a. Manually - Push button on canopy release handle, located on left side of fuselage and pull handle full length.

b. Lift canopy and remove it.

3. EMERGENCY CANOPY JETTISON

a. Push button to open rescue door, located on left side of fuselage.

b. Pull emergency canopy jettison T-handle, located on left side of fuselage, 6 feet (2 meters) out to jettison canopy.

WARNING

Avoid canopy jettison when it is already partially open or in presence of gas vapors.

4. CUT-IN

a. Cut-in canopy behind pilot's head.

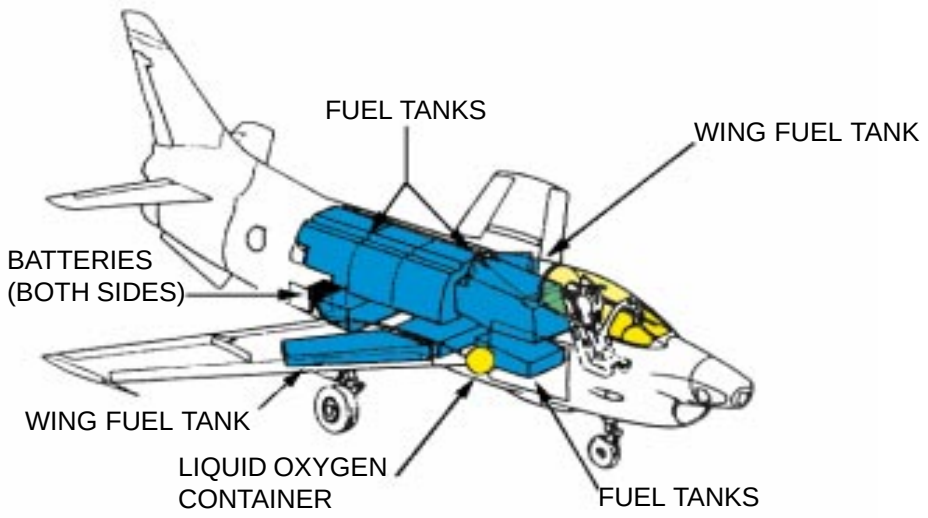

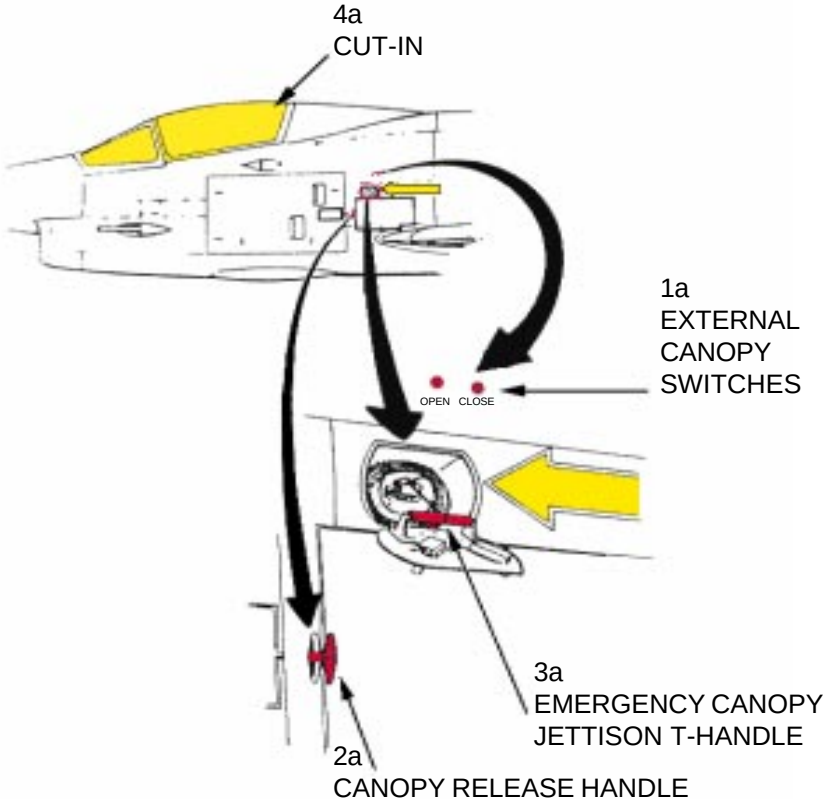

ENGINE SHUTDOWN

1. ENGINE SHUTDOWN

a. Pull throttle, located on left console, aft to OFF position, then raising IDLE detents.

b. Place fuel shutoff switches and fuel booster pumps, located on left side console, to OFF position.

c. Place battery and generator switches, located on right side console, to OFF position.

d. All armament selector switches, located on left side of forward instrument panel, to OFF position.

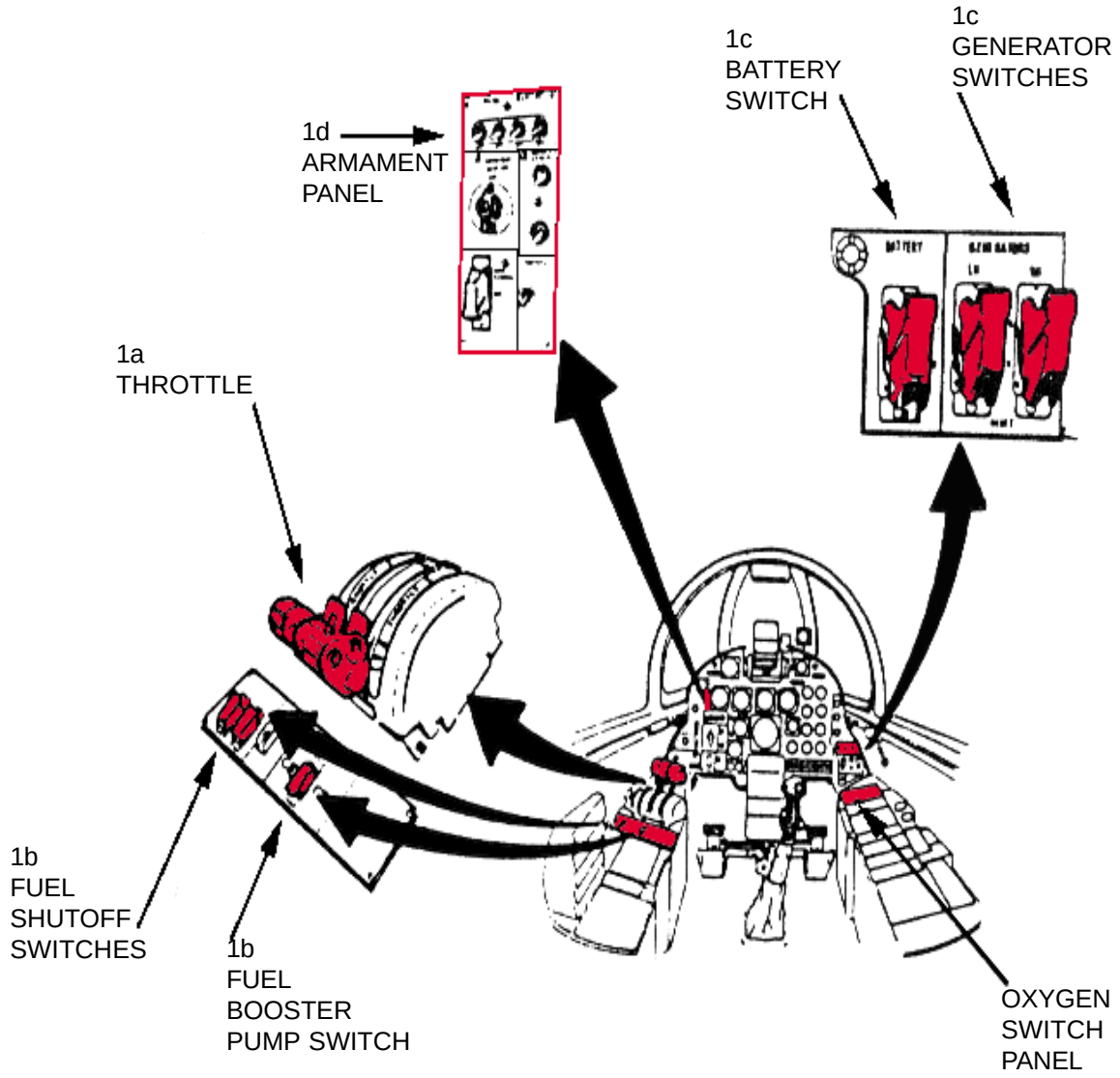

EJECTION SEAT SAFETYING AND AIRCREW EXTRACTION

1. EJECTION SEAT SAFETYING (MARTIN-BAKER)

a. Insert safety pin in ejection gun sear located on top aft of seat to safety main gun charge.

b. Insert safety pin in rocket initiator sear located on upper left side of seat.

c. Insert safety pin in canopy jettison sear (behind armour plate), if canopy has been removed manually or broken.

2. AIRCREW EXTRACTION

a. Remove safety fork from harness quick release box.

b. Rotate outer assembly of quick release box 90 degrees clockwise and strike it to open and unlock belts.

c. Release or cut leg restraints and any further connections restricting the removal of crewmember.

d. Remove crewmember oxygen mask and shut off oxygen switch.

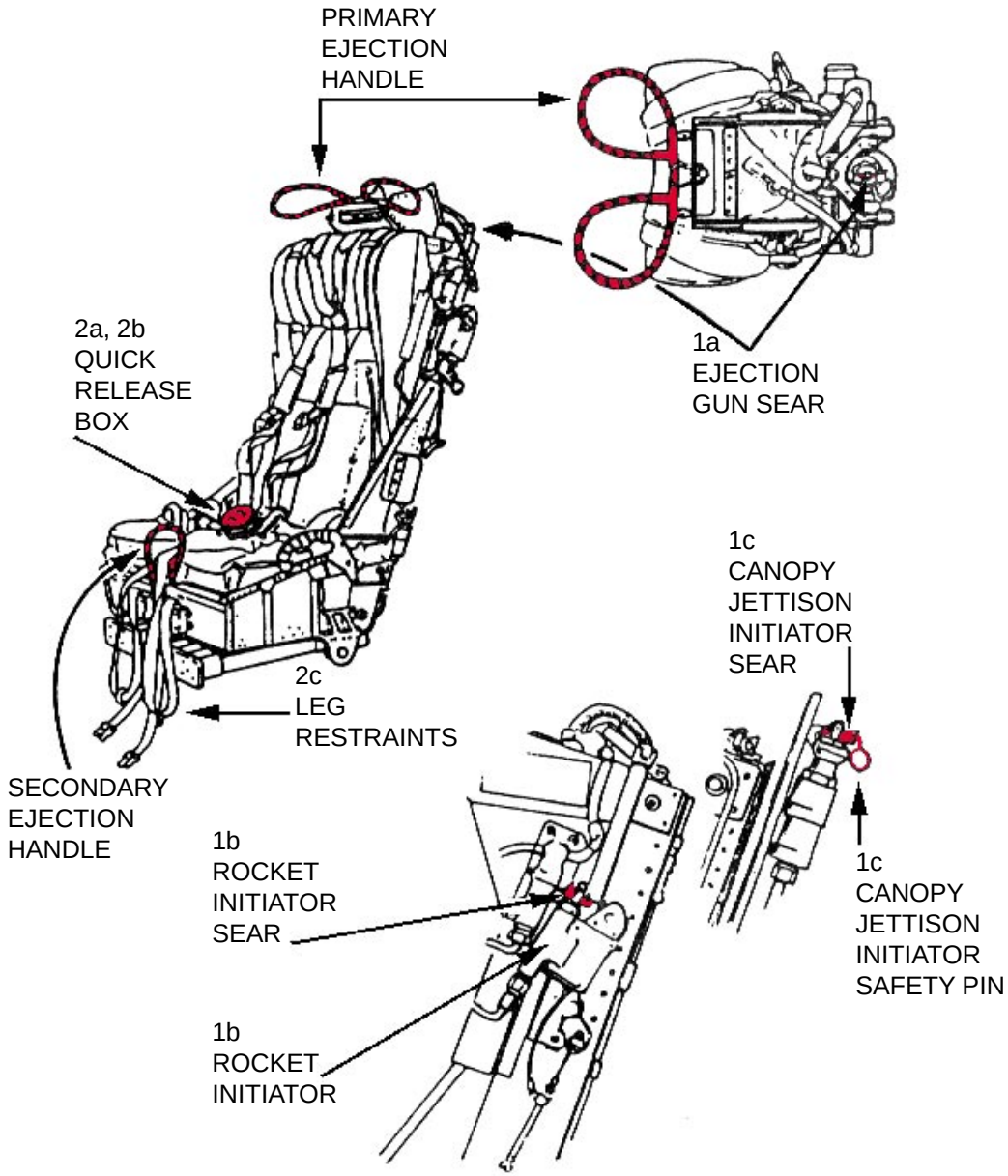

AIRCRAFT GENERAL INFORMATION

The JA 37 is a single engined jet aircraft of light-metal construction with reversed, thrust-assisted braking.

The aircraft is available in five versions: attack, fighter, reconnaissance (2 versions) and trainer.

The attack (AJS 37) and fighter (JA 37, JA 37D) versions are single-seaters, equipped with sophisticated weapon systems.

The reconnaissance versions (AJSH 37 and AJSF 37) are also single-seaters, equipped with a sophisticated reconnaissance systems, (radar and photo).

The training version (SK 37) is a two-seater, fitted with equipment for dual control.

The fuel tanks are of integral type, (sealed sheet-metal compartments).

The engine is a dual-spool turbofan engine, designated RM8 and equipped withan afterburner (Ebk).

The anti G-suit installation uses an oxygen gas media.

The instructions deal with differences between aircraft versions only when they affect rescue activities.

Beta-fluorescent light tubes, containing tritium gas, are embedded and glued into some of the panel switches/knobs in the cockpit.

The antenna units, PS-37/A and PS-46/A, must be handled with care.

The radar unit includes TR-tubes containing tritium.

The aircraft contains carbon-fibre composite components. These parts are identified by labels with the word COMPOSITE. Carbon-fibre com-posites demand special precautions in the event of fire and recovery opera-tions with respect to health risks and damage.

Always regard remaining stores as being armed and potentially dangerous upon accidental firing or uncommanded release. See AIRCRAFT HAZARDS page with regard to identification of ammunition.

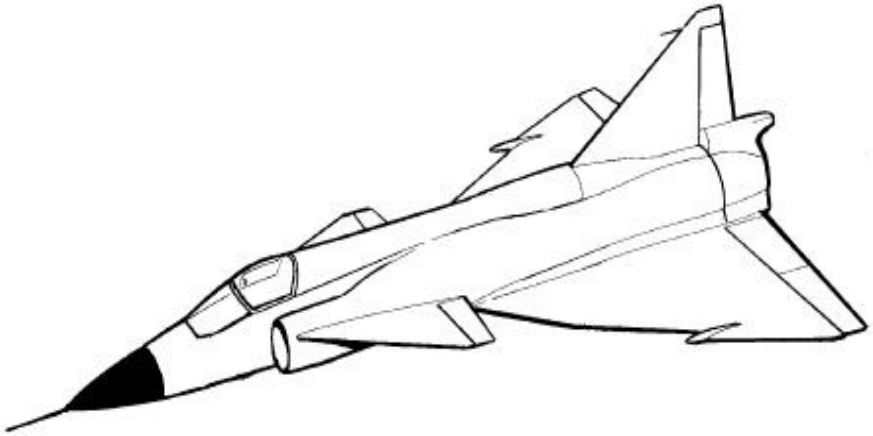

AIRCRAFT HAZARDS

AIRCRAFT VERSION / PYLON CODES (Applicable to all versions) / EXTERNAL STORES	AJS 37	SK 37	AJSH 37	AJSF 37	JA 37
30 MM GUN M/55	■ ■ ■ ■ ■ ■	■ ■	■ ■ ■ ■		■ ■
30 MM GUN M/75					■
12.7 MM GUN M/39 PRACTICE	■ ■ ■ ■	■ ■			
RB04/ASM 04	■ ■ ■ ■		■ ■ ■ ■		
RB05/AGM 05	■ ■ ■ ■				
RB15F/ASM 15F	■ ■ ■ ■		■ ■ ■ ■		
RB24/RB24J/AIM 9/9B	■ ■ ■ ■ ■ ■ ■ ■		■ ■ ■ ■ ■ ■ ■ ■	■ ■ ■ ■ ■ ■ ■ ■	■ ■ ■ ■ ■ ■ ■ ■
RB71/AIM SKYFLASH					■ ■
RB99/AIM 120 AMRAAM					■ ■ ■ ■
RB74/AIM 9J SIDEWINDER	■ ■ ■ ■ ■ ■		■ ■ ■ ■ ■ ■	■ ■ ■ ■ ■ ■ ■ ■	■ ■ ■ ■ ■ ■ ■ ■
RB75/AGM MAVERICK	■ ■ ■ ■ ■ ■				
ROCKET POD 6PC OF 13.5CM ROCKETS IN EACH POD	■ ■ ■ ■ ■ ■	■ ■	■ ■ ■ ■ ■ ■		■ ■ ■ ■ ■ ■
PRACTICE ROCKETS 6.3 CM	■ ■ ■ ■ ■ ■		■ ■ ■ ■ ■ ■		
HE-OR FLARE BOMBS	■ ■ ■ ■ ■ ■		■ ■ ■ ■ ■ ■		
PRACTICE BOMBS 15 KG	■ ■ ■ ■ ■ ■		■ ■ ■ ■ ■ ■		
ECM	■ ■ ■ ■	■ ■ ■ ■	■ ■ ■ ■	■ ■ ■ ■	■ ■ ■ ■ ■ ■
MS POD NIGHT RECONNAISSANCE			■ ■ ■ ■	■ ■ ■ ■	
CAMERA POD			■ ■ ■ ■		
ECM POD, U95					■ ■
DROP TANK	■ ■ ■ ■	■ ■ ■ ■	■ ■ ■ ■	■ ■ ■ ■	■ ■ ■ ■
DISPENSER, BK M90	■ ■ ■ ■		■ ■ ■ ■		

EXAMPLE: (AJS 37)
MAX LOAD
16 HE BOMBS
2 AIM 9/AIM 9B

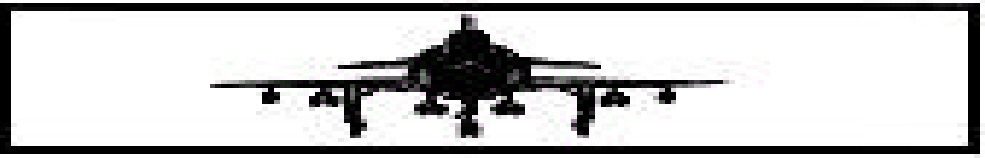

AIRCRAFT HAZARDS - Continued

1. ENGINE INTAKE, REVERSE THRUST, AND EXHAUST

WARNING

Exhaust gases cause danger of injury due to high temperature, high air velocity, moving particles flying from the ground and up etc. Avoid the danger zones, especially the engine thrust area. Also pay attention to the thrust reversers that directs the exhaust air forward.

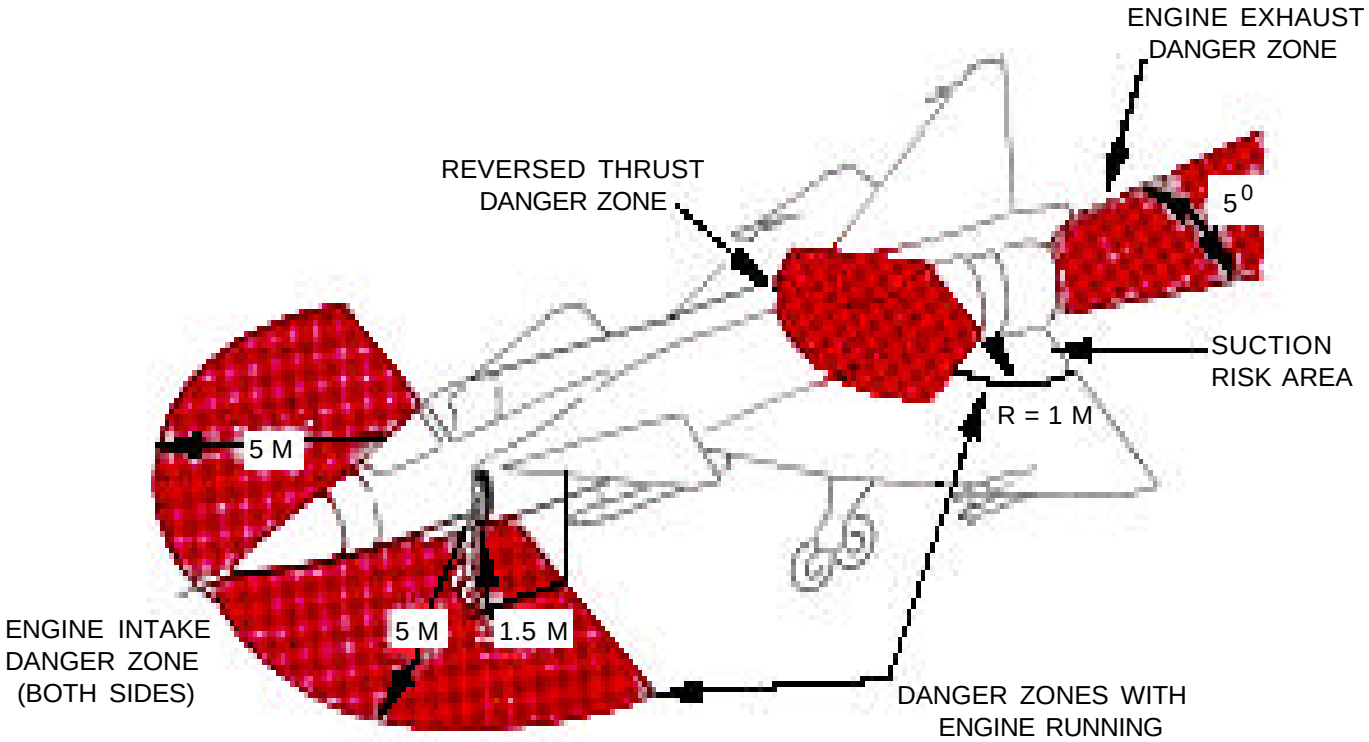

AIRCRAFT HAZARDS - Continued

APPLICABILITY: SK 37

1. FLAMMABLE MATERIALS

FUEL TANKS

OXYGEN

EXPLOSIVES

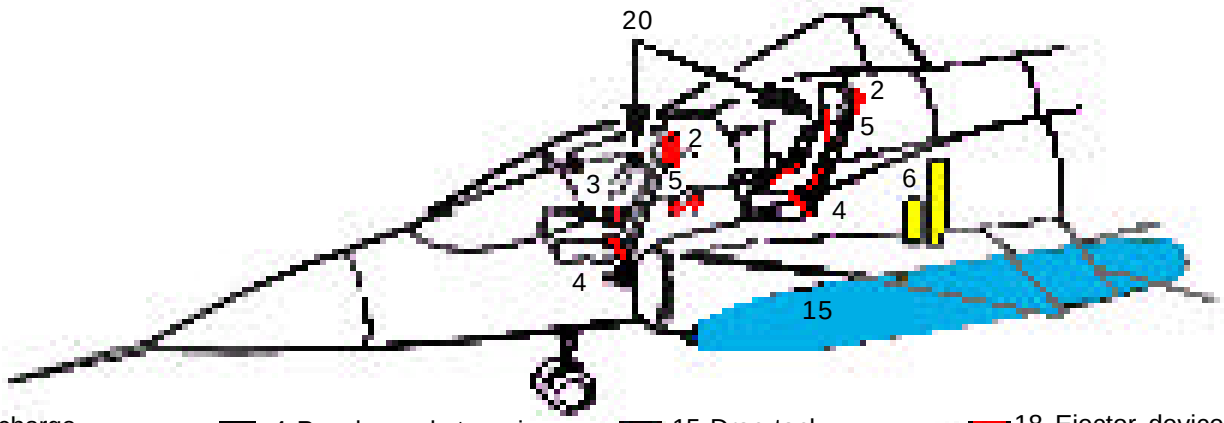

2 Propellant charge
Powder 2x6.7 oz (190 g)

4 Powder rocket engine
2x103 oz (2900 g)

15 Drop tank
(always fitted)

18 Ejector device
Powder 2x0.00102 (0.1 g)

3 Canopy ejector
Powder 4x0.16 oz (4.5 g)

5 Chute deployer
Powder 2x0.05 oz (1.4 g)

17 Mechanism opener
Powder 2x0.4 g (0.4g)

20 Position locking device
Powder 2x0.22 oz (6.2 g)

6 Oxygen (GOX) container
1x6 FT^3 (23 L)
1x1.7 FT^3 (6.6 L)
at 125 atm (12.5 MPa)

2. AERIALS (RADIO FREQUENCY RADIATION)

NOTE:

Rescue personnel should not stay inside the danger zones unnecessarily, when the aircraft is connected to an external power supply, or when the aircraft engine is running and the landing gear is retracted.

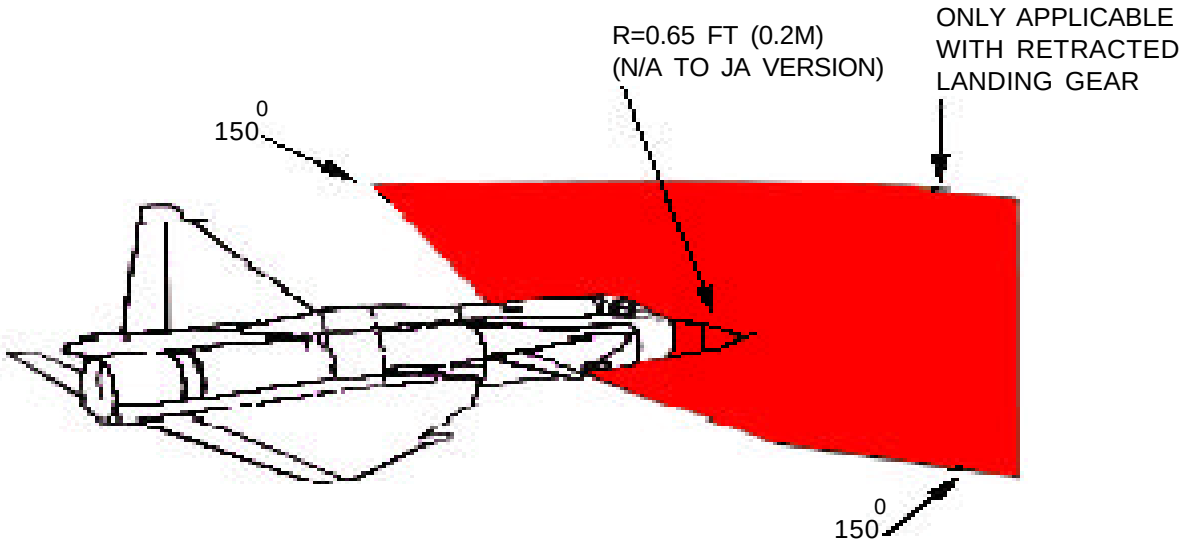

AIRCRAFT HAZARDS - Continued

AIRCRAFT DIMENSIONS
Length 58 FT (17 M)
Wing span 36 FT (11 M)
Height to wing-tips with extended landing gear 5.6 FT (1.7 M)
Height to canopy rail
· extended landing gear 8.5 FT (2.6 M)
· retracted landing gear 4.3 FT (1.3 M)
Take-off weight 33,000 LB (15 tons)
(assumes “clean” aircraft)

1. FLAMMABLE MATERIALS

FUEL
Aviation turbine fuel (JP8, JET A1)
Volume 1300 FT^3 (5000 L)
9900 LB (4500 KG)

HYDRAULICS
Hydraulic fluid 021
Tank capacity 15 FT^3 (55 L)
Pressure accumulator 3 pcs

AIR
Compressed-air container 2 FT^3 (7 L) 1 pc
Gas container mounting AIM 74 (0.6 FT^3 (2.27 L)

OXYGEN
Oxygen (GOX) container (6 FT^3 (23 L) 1 pc
SK 37 (trainer):
Oxygen (GOX) container (6 FT^3 (23 L) 1 pc
Oxygen (GOX) container (2 FT^3 (7 L) 1 pc

EXPLOSIVES
Powder charges (for the trainer 2 pcs) for:
· mechanism opener
· canopy ejector
· powder rocket engine
· chute deployer
· armament pylons
· back seat ejection device
· position locking device

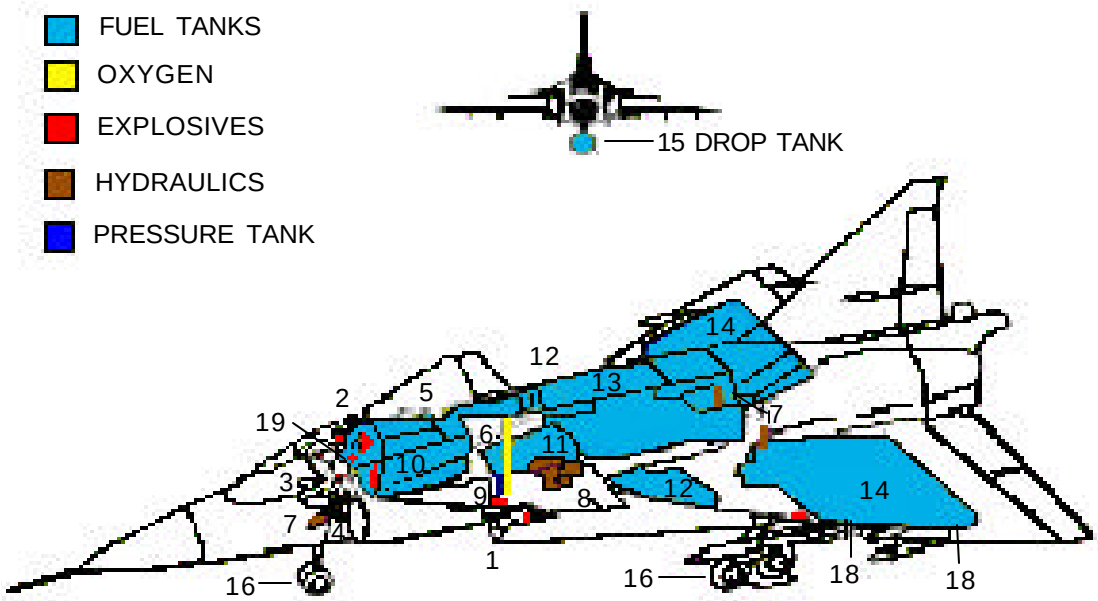

1 Release mechanism
Armament pylons
Powder 2x0.44 oz (12.5 g) each pylon

2 Propellant charge
Powder 1x6.7 oz (190 g)

3 Canopy ejector
Powder 2x4.5 g
Powder 2x0.16 oz (4.5 g)

4 Powder rocker engine
Powder 1x103 oz (2900 g)

5 Chute deployer
Powder 1x0.05 oz (1.4 g)

6 Oxygen (GOX) container
1x6 FT^3 (23 L)

7 Pressure accumulator (3)

8 Pressurized fluid system
Syst 1 & 2 13.2 FT (50 L)
206 atm (20.6 MPa)

9 Compressed-air cylinder
1x2 FT^3 (7 L) at 125 atm (12.5 MPa)

10 Integral tank (not SK 37)

11 Integral tanks

12 Integral tanks

13 Integral tank

14 Integral tanks

15 Drop tank

16 Wheels 15 atm (1.5 MPa)

17 Mechanism opener
Powder 2x0.02 oz (4 g)

18 Gas bottle mounting 0.6 FT^3 (2.27 L) x mountings
207 atm (20.7 MPa) at (only JA 37) +27 °F (15 °C)

19 Position locking device
Powder 1x0.22 oz (6.2 g)

FIRE ACCESS ZONES

WARNING

Exercise extreme caution. There is a risk of damage to the fuel tanks and main fuel lines if accessing is outside the marked zones. Damage to fuel tanks and lines can cause death of injury to personnel.

1. FIRE ZONE 0

a. Located on top of aircraft.

2. FIRE ZONE 1

a. Cut a hole in the fuselage, (0.8 inches or 2mm) within the marking on the left and right side.

b. There is an access zone at the engine exhaust area.

c. For AJS, SK, AJSF, and AJSH models: Cut a hole in the fuselage (0.4 inches or 2mm) or open the door by pressing the three snap action locks.

NOTE:
There is no depiction for Zones 2 and 3.

3. FIRE ZONE 4

a. For AJS, SK, AJSF, and AJSH models: Force open the door using a tool or similar object. The door is difficult to reach with external armament on the pylons. The door is supported in the middle and drops off when opened.

4. SP ACCESS DOOR TO ENGINE FIRE ZONE 1
APPLICABILITY: JA 37

a. Press on the forward end of the door, located on the forward underside of the aircraft.

b. Pull out handle (stowed inside door) to locked position.

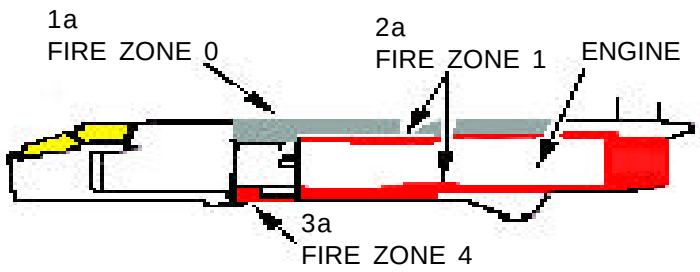

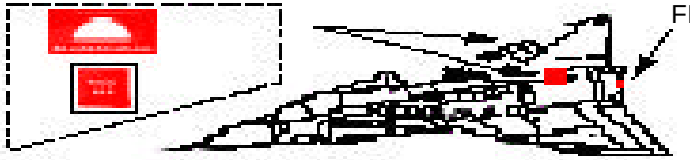

FIRE ZONE 1 MARKINGS

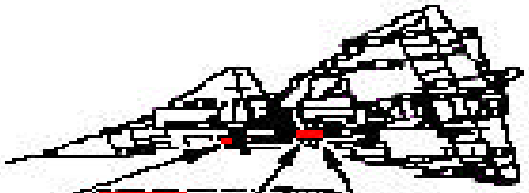

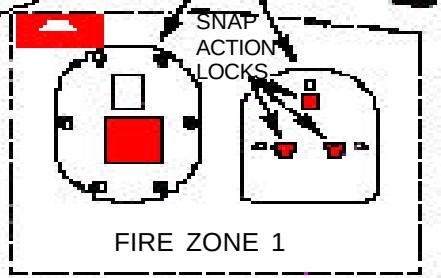

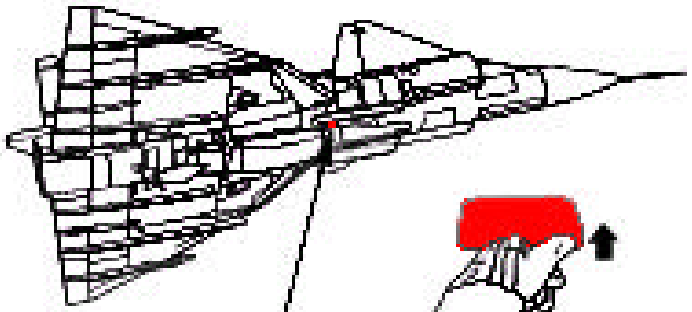

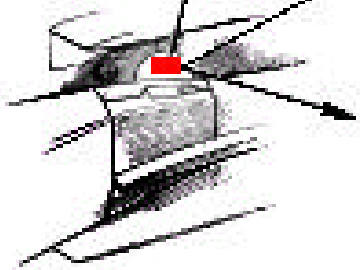

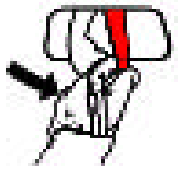

4a, 4b
JA 37 FIRE ZONE 1 DOOR
WITH INTERNAL HANDLE

SPECIAL TOOLS/EQUIPMENT
Power Rescue Saw
Canopy Open Tool

AIRCRAFT ENTRY

1. NORMAL ENTRY

a. To operate the main operating handle, depress the locking catch to release the handle and handle catch.

b. Pull the handle backwards until it stops while avoiding the handle catch.

c. Press the handle catch and push the handle forward until the locking hooks open. Remove hand from the handle catch.

d. Push the handle into its forward position. The canopy now opens automatically.

2. EMERGENCY ENTRY

a. If the canopy does not open automatically as in Step 1d, insert a tool between the canopy and the canopy rail and force the canopy upward.

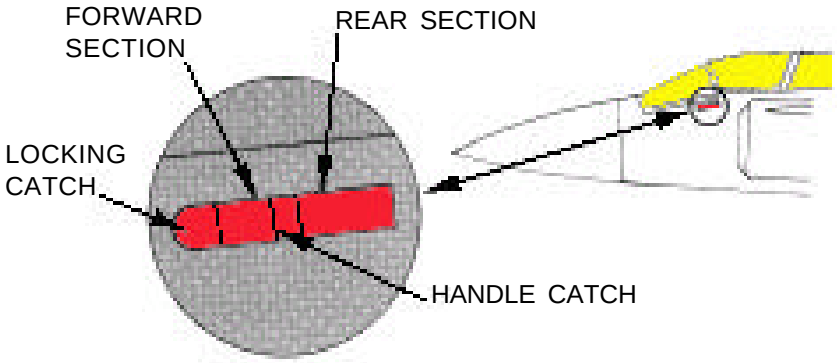

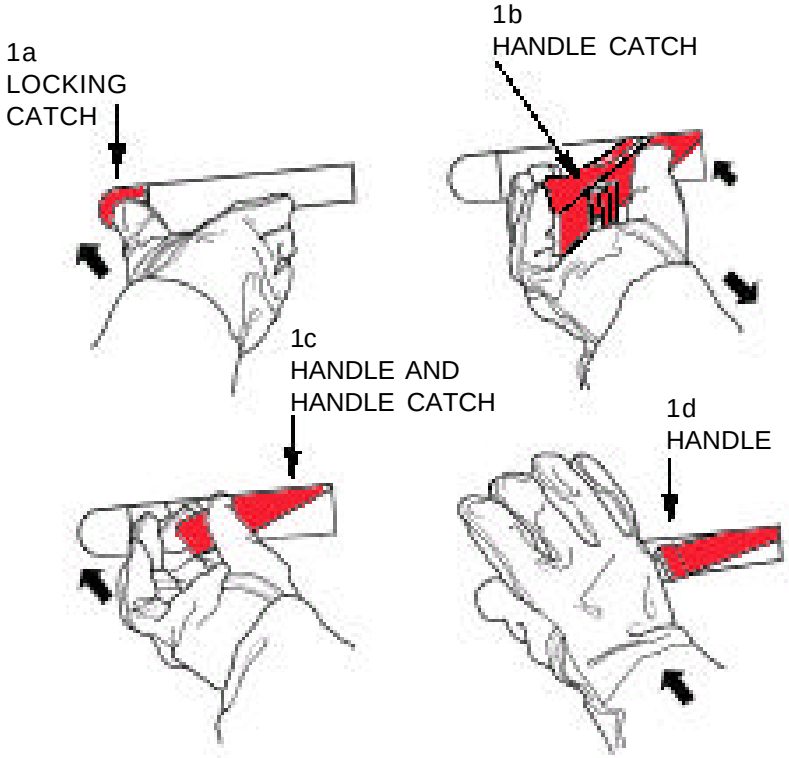

ENGINE SHUTDOWN

ENGINE SHUTDOWN

1. EXTERNAL ENGINE SHUTDOWN

a. Climb over left wing to left side fuselage engine area to access the external engine shutdown panel.

b. Reach inside the external engine shutdown panel, pull the emergency shutdown wire loop handle recessed inside the panel outward.

c. Pull the wire loop handle which is connected to the engine shutdown wire to the extended position by bending the wire forward over the edge of the panel recess.

d. Continue to maintain extended bent position, the engine will stop after 40 to 70 seconds.

2. INTERNAL ENGINE SHUTDOWN

NOTE:
All switch maneuvres are executed from the forward cockpit.

NOTE:
Alternative throttle applies to JA 37 version.

a. Ensure the safety catch, located on the control stick, is in the SAFE (down) position.

b. Lift throttle locking catch, located on the front end of the throttle lever, and move the throttle lever back to the “O” (maximum reverse) position.

c. Turn off the main fuel switch marker “LT-KRAN”. Wait about 3 seconds before proceeding to next step.

d. Turn off the main power switch, marked “HUVUDSTROM”. (This secures the external stores against accidental firing.)

e. Set the oxygen cock, located on inside canopy railing, marked “SYRGAS”, to the OFF (FRAN) position, indicated in red paint.

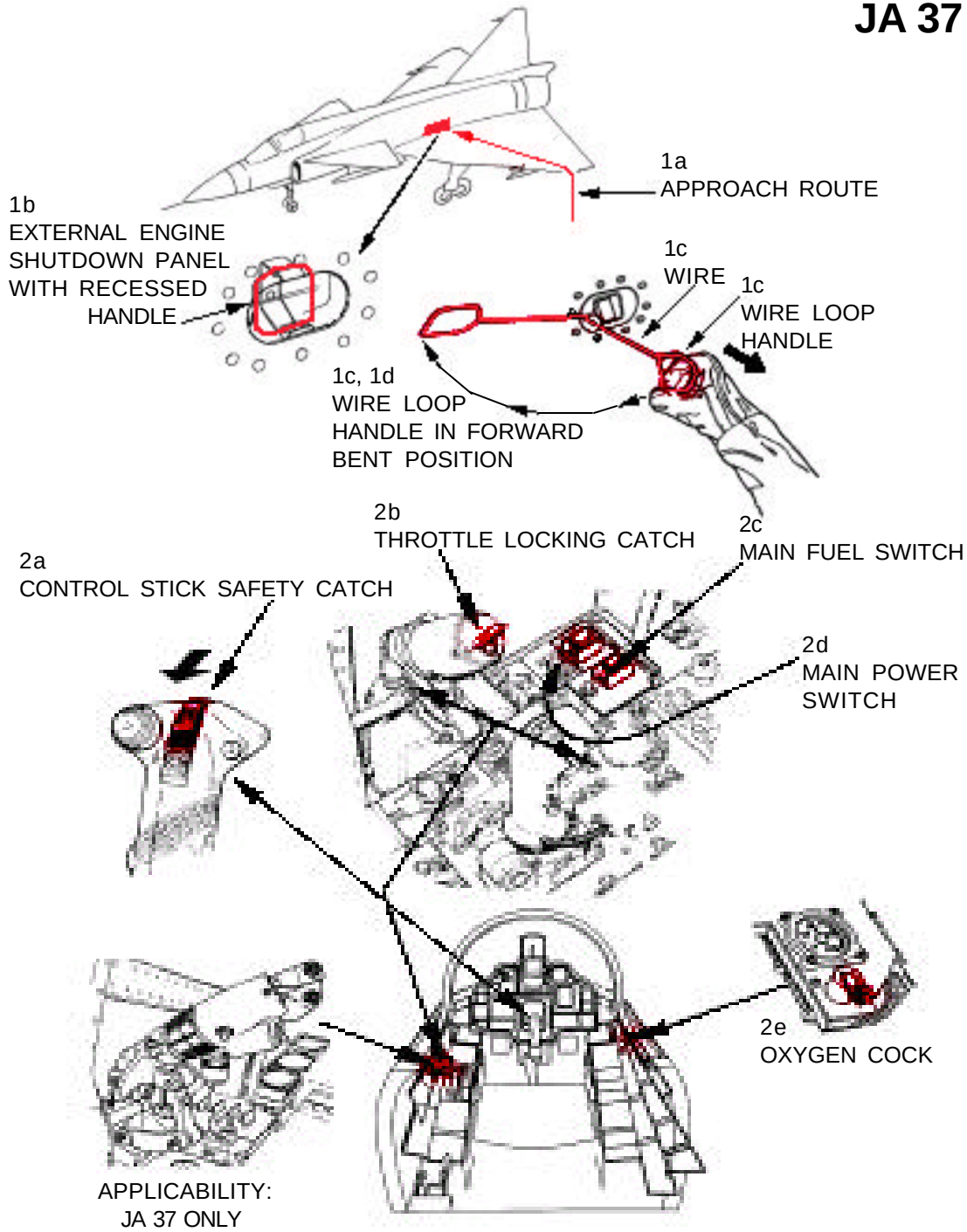

AIRCREW EXTRACTION

1. AIRCREW EXTRACTION

WARNING

If seat damage occurs after an accident, e.g. if the aircraft has somersaulted, damage may render the ejection seat impossible to safe. Be extremely careful not to touch or rotate ejection seat handles located on the forward armrest portions of the seat. Injury or death to personnel may result if ejection handles are moved in this condition.

a. To safe the ejection seat, pull the ejection seat safe handle, located on the top right portion of the seat, outward to the SAFE position.

b. For SK 37 versions, two seats are installed in the aircraft. Both seats are safetied by pulling the ejection seat safe handles outward to the SAFE position.

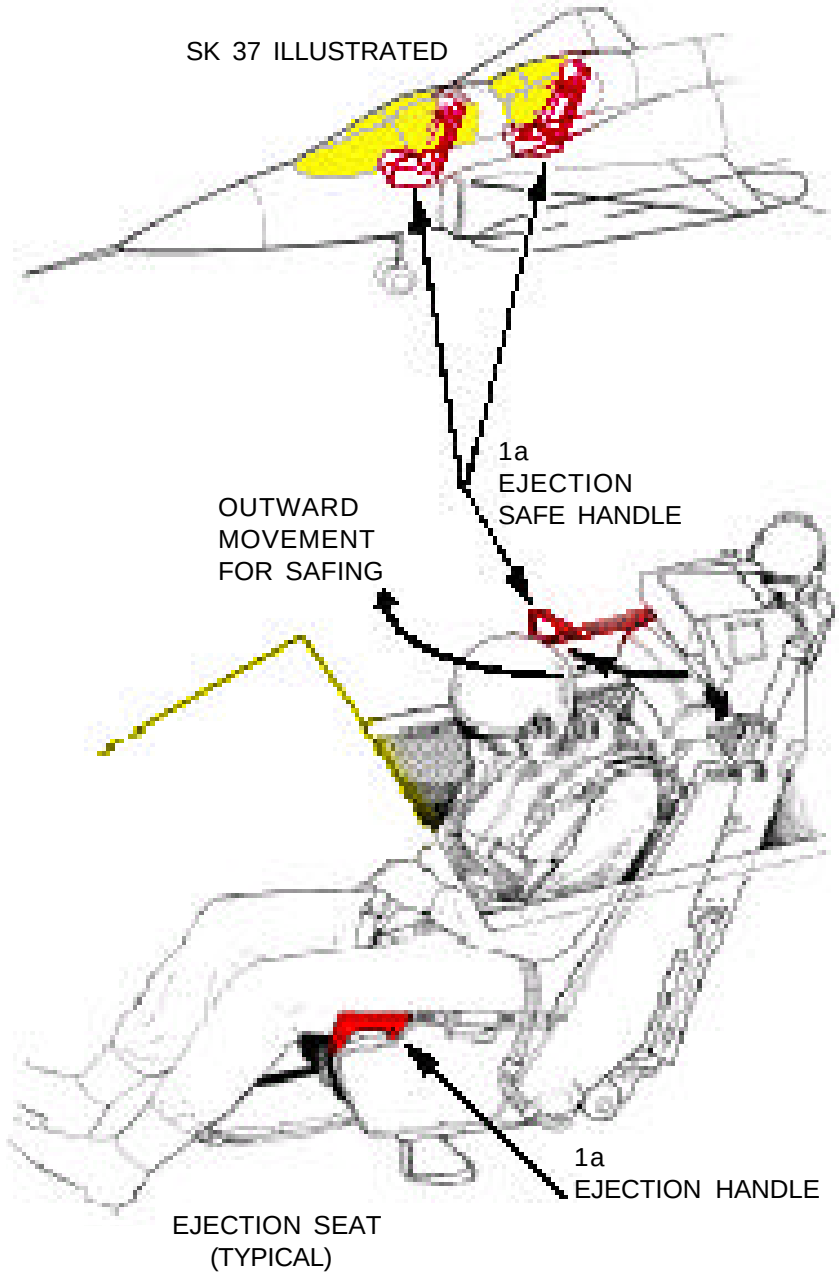

AIRCREW EXTRACTION - Continued

2. DISCONNECTING AIRCREW MEMBER FROM EJECTION SEAT

NOTE:
The procedures are the same for SK 37.

a. Remove the crewmember's oxygen mask by squeezing the mask tabs inward. Check for breathing. Raise visor if necessary to determine crewmember's breathing.

b. Open the main lock by depressing the yellow button and turning the knob to its stop position. Disconnect the oxygen and G-suit hoses.

c. Lift the release plate and open the chest harness catch.

d. Disconnect the life raft line by opening the catch at the lower left corner of the life vest.

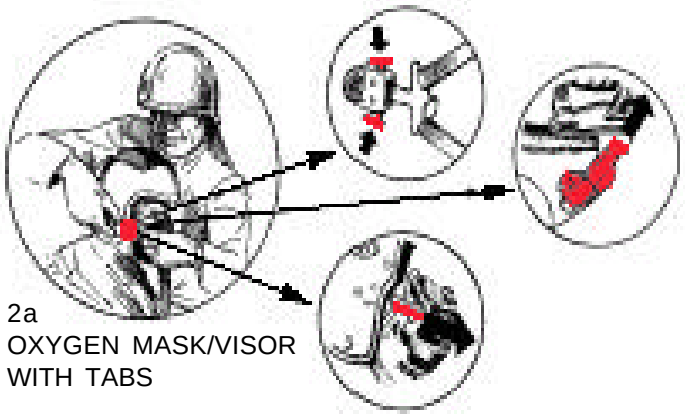

2a
OXYGEN MASK/VISOR WITH TABS

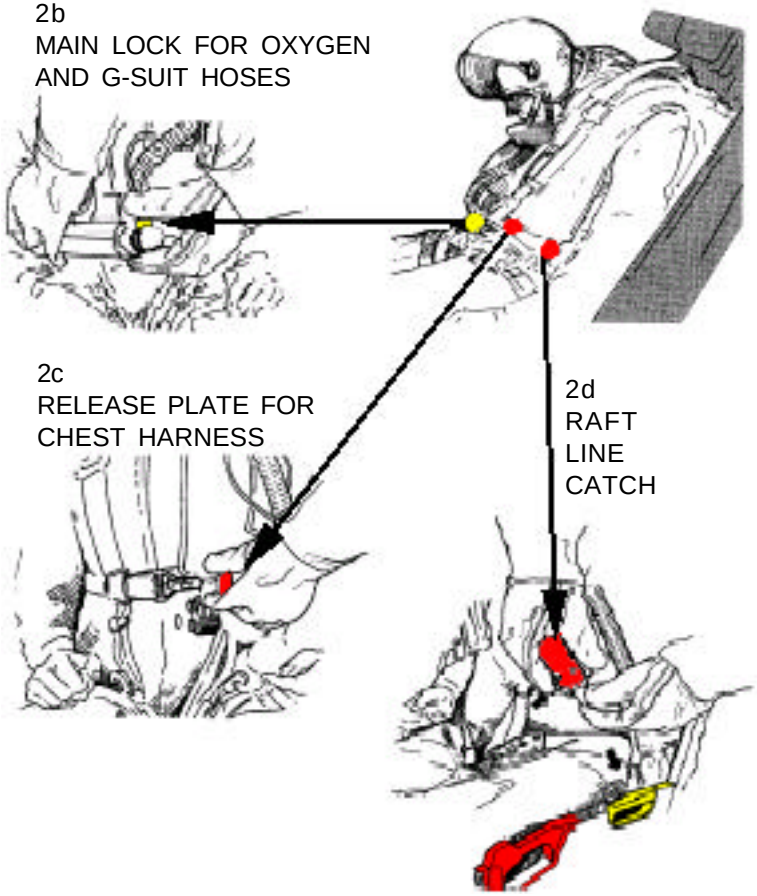

AIRCREW EXTRACTION - Continued

2. DISCONNECTING AIRCREW MEMBER FROM EJECTION SEAT - CONTINUED

NOTE:
The procedures are the same for SK 37.

e. Stretch the shoulder harness straps up and out of place while placing the crewmember's arms inside the straps.

f. Release the leg restraining straps. Lift the yellow handle, located on the aft left portion of the seat.

NOTE:
During aircrew extraction training, the leg restraining straps shall be released at the crewmember's boots.

g. Disconnect the anti G-suit hose by applying a required force of approximately 20 N (2kp).

h. Open the left and right leg harness by lifting the release plates.

3. LIFTING OUT THE CREWMEMBER

NOTE:
During training involving operational aircraft, extraction is not to be practised due to the risk of damaging instruments, etc. Lifting the crewmember from the aircaft should be carried out as care fully as possible taking into account any injuries the crewmember might have.

a. Grasp the crewmember under the arms and lift upwards.

b. Change grip by using knees to hold the crewmember, and lift the crewmember out of the cockpit. Hand the crewmember over to another rescueman on the ground.

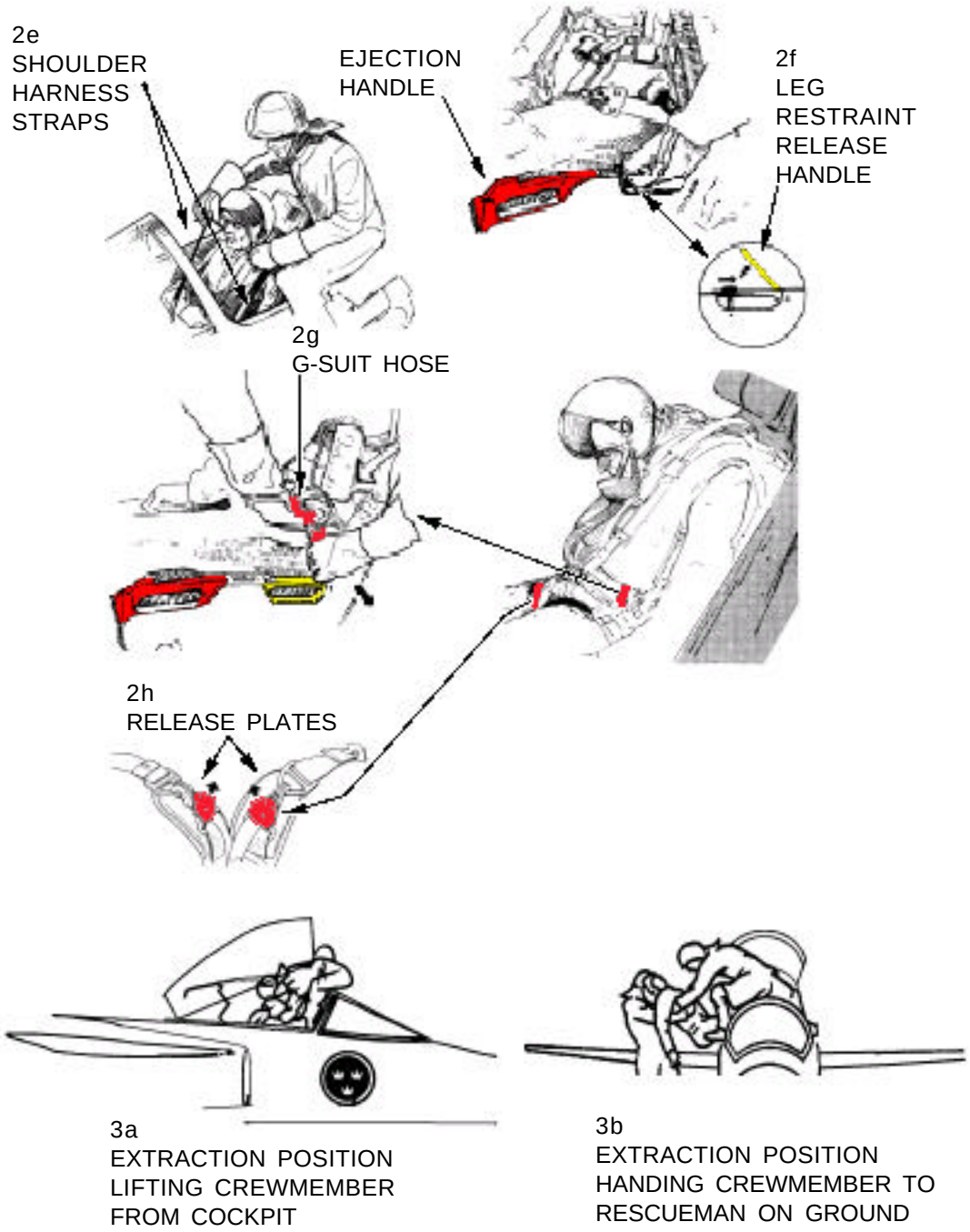

AIRCRAFT TOWING AND WINCHING

1. AIRCRAFT TOWING AND WINCHING

a. To tow and winch backward, attach routings around both intakes. Tow: winches (four). Couplings (two).

b. To tow and winch forward, attach routings around open cockpit and under nose of aircraft. Tow: winches (four). Couplings (two). Harness (two).

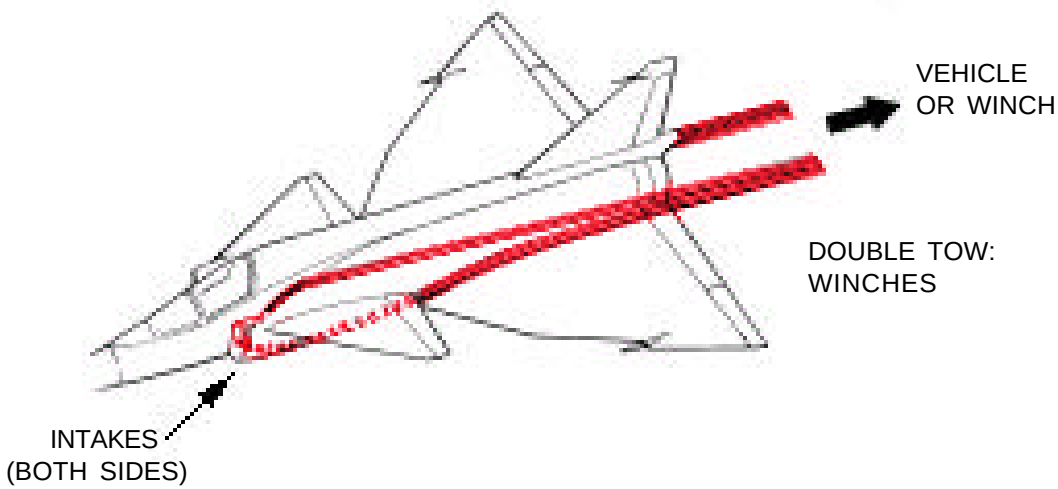

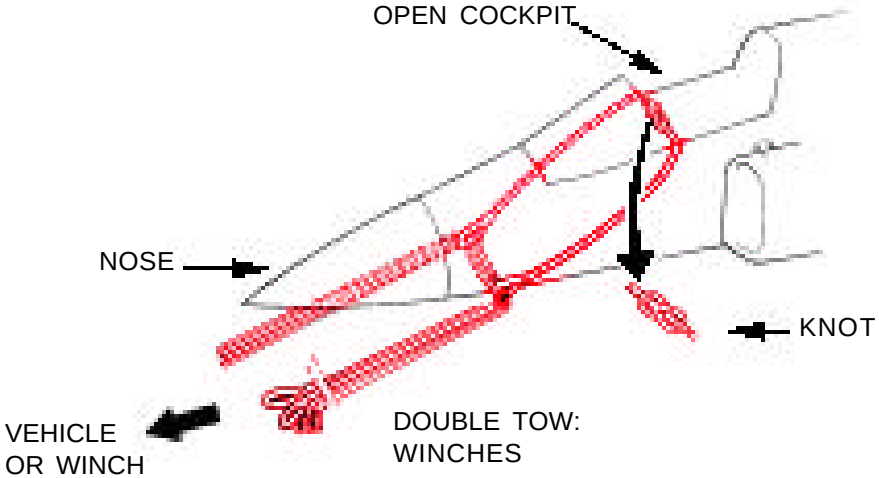

NOTE:
Removal of a belly-landed aircraft with the landing gear retracted.

AIRCRAFT GENERAL INFORMATION

JAS 39 is available in two versions, JAS 39A and JAS 39B.

39A is a single-seater, 39B a two-seater. It is a single-engined centerwinged aircraft with moveable canards, side air-intaktes and fuselage mounted landing gear. It has a turbo-fan engine with and an after burner.

The fuel tanks are primarily sealed spaces (integral tanks) in the fuselage and the wings.

The canopy is opened to the left with an electro mechanical actuator and can be opened manually upon emergency from both the inside and outside.

The aircraft is equipped with ejection seat/s and a canopy fracturing system. The canopy fracturing system consists of an ignition system in the aircraft and detonating cable on the inside of the canopy glass. The 39B also has such on the protective pad. Safe status is automatic when the canopy is open. Rescue equipment allows both quick exiting and emergency exiting from stationary ground aircraft.

The anti-G suit installation uses a pure oxygen gas media.

Instructions deal with differences between aircraft versions only in so far as they affect rescue activities.

The aircraft contains a large amount of carbon-fibre composites e.g. in the wings. Carbon-fibre composites demand special precautions in the event of fire and recovery operations with respect to health risks and injuries.

Some units included in the electronics system for primary data, navigation, target acquisition (wave conductor) and identification have components which contains beryllium copperoxide ceramics.

Beryllium copperoxide ceramics, which is poisonous, is incapsulated in the components and can not normally be spread out in the environment.

In the event of a unit containing beryllium copperoxide ceramics being damaged, then the same actions shall be taken to a requisite degree as those for radioactive components.

Always regard remaining stores as being armed and potentially dangerous upon uncommanded firing or release. Check the safety distance and identification of ammunition before approaching stores.

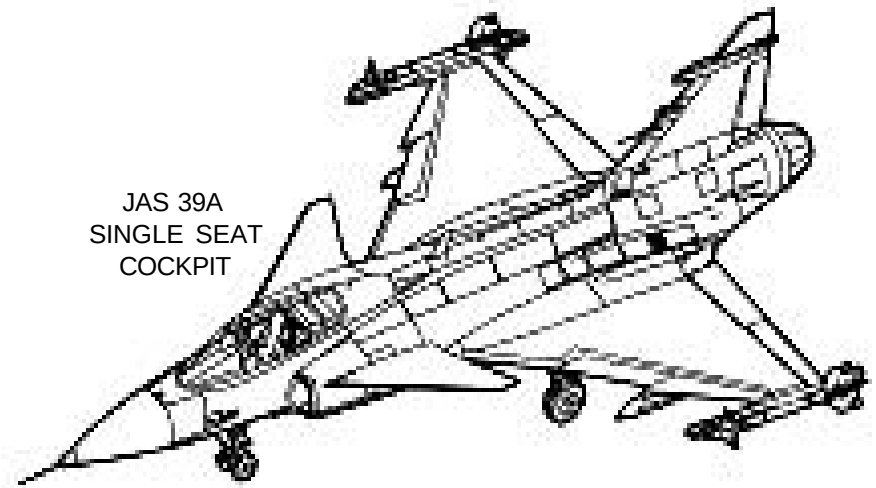

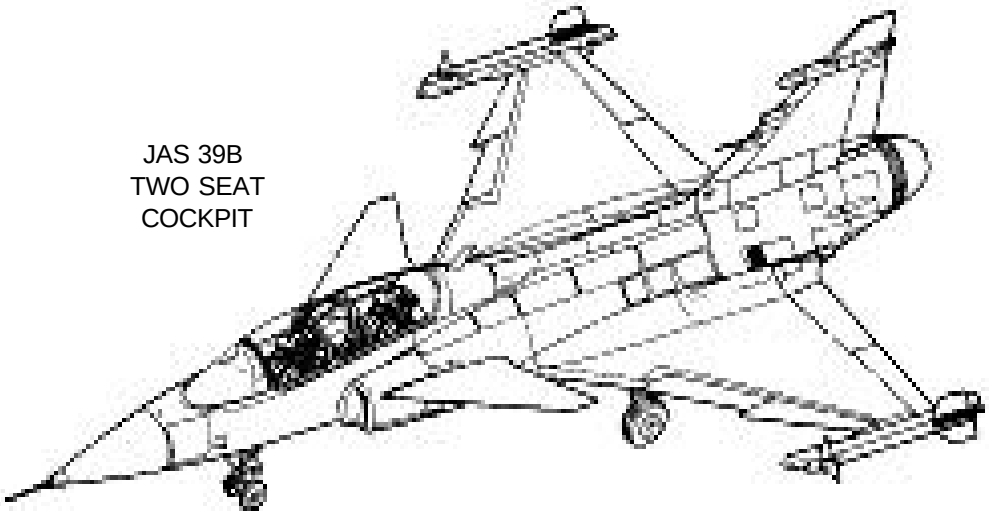

AIRCRAFT HAZARDS

AIRCRAFT TYPE / TYPE OF STORES (PYLON CODES)	JAS 39A	JAS 39B
27 MM INTERNAL GUN M/85	●	
Rb 15F / ASM 15F	● ●	● ●
Rb 24 J / ASM 9P	● ● ● ● ● ●	● ● ● ● ● ●
Rb 99 / AIM 120 AMRAAM	● ● ● ●	● ● ● ●
Rb 74 / AIM 9L	● ● ● ● ● ●	● ● ● ● ● ●
Rb 75 / AGM 65 MAVERICK	● ● ● ●	● ● ● ●
BK 90 / DISPENSER WEAPON	● ●	● ●
COUNTERMEASURE BOY 402 BOY 403	● ●	
DROP TANK	● ● ●	● ● ●

EXAMPLE: (JAS 39B) WEAPON LOAD
2 BK 90 DISPENSERS
2 Rb 75 / AGM 65
2 RB 74 / AIM 9L
1 DROP TANK

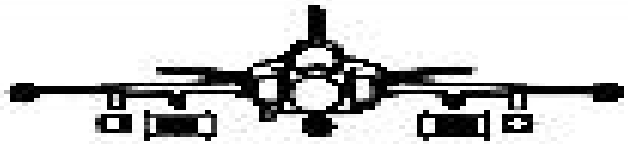

AIRCRAFT HAZARDS - Continued

1. CANOPY FRACTURING AND EXTERNAL STORES DANGER ZONES

WARNING

Red shaded area depicts danger zones applicable to JAS 39A and JAS 39B versions. These zones are for uncommanded release, not firing. Release can occur upon fire, rescue or removal. Injury to personnel may occur under these circumstances in these danger zones.

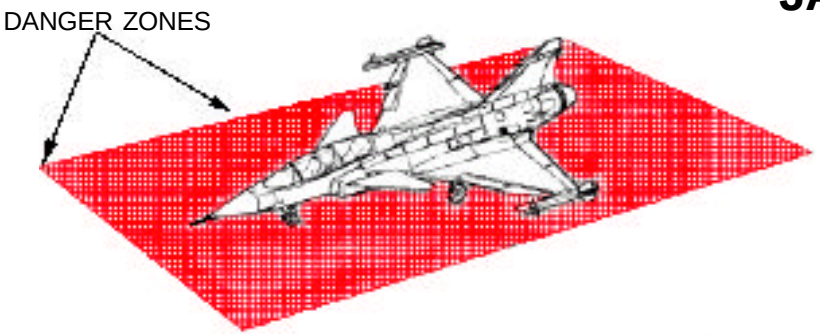

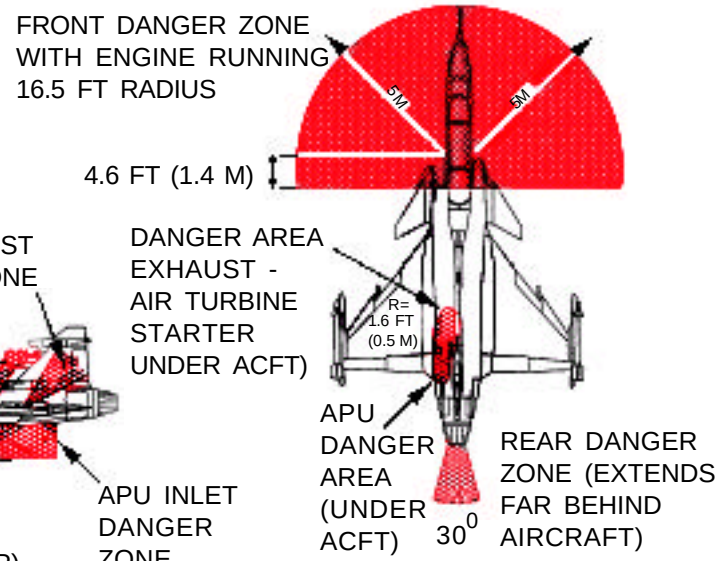

2. INTAKE AND ENGINE EXHAUST DANGER ZONES

WARNING

Underpressure (air intake) high air velocity, heat or flying stones can cause serious injury.

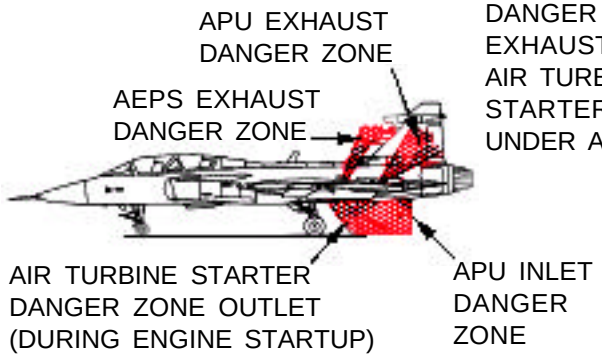

3. FLIGHT CONTROL SYSTEM DANGER ZONES

WARNING

Activated flight control system may make the steering surfaces move. This movement can cause serious injury to personnel.

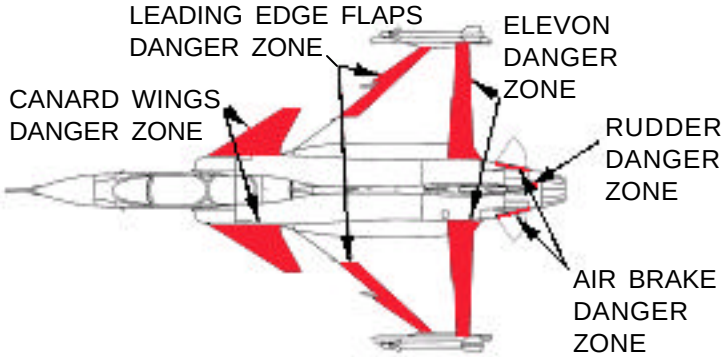

AIRCRAFT HAZARDS - Continued

JAS 39

DIMENSIONS	JAS 39A
Length	46 FT (14 M)
Wing span	29.5 FT (9 M)
Height to wing-tips with extended landing gear	7 FT (2 M)
Height to canopy rail	
· extended landing gear	7 FT (2 M)
· retracted landing gear	4.3 FT (1.3 M)
Take-off weight (assumes "clean" aircraft)	17600 LB (8 tons)"

FUEL	
Aviation turbine fuel	(JP8)
Capacity	1055 FT^3 (4000 L)
	7700 LB (3500 KG)

HYDRAULICS	
Hydraulic fluid	021
Tank volume	7.9 FT^3 (30 L)
Pressure accumulator	2 pcs

HALON	
Fire extinguisher	0.08 FT^3 (0.3 L)

OXYGEN	
Oxygen (GOX) container	1 x 3.7 FT^3 (14 L)
Emergency oxygen (GOX) container	1 x 0.11 FT^3 (0.4 L)

EXPLOSIVES	
Propellant charges (powder effects) for:	
· armament pylons	
· ejection seat/s	
· canopy transparency bursting	
· fire extinguisher	
. thermal batteries	3 pcs

BATTERIES	
Aircraft battery	NiCd 27 Ah

CRYOGENIC GAS INSTALLATION RB74 (AIM-9L)	
-Compressed-air container	2x0.7 FT^3 (2.5L)
-Loading pressure	152 - 210 atm (15.2 -21.0 MPa)

POWER AND EXPLOSIVE AGENTS

FUEL TANKS

HYDRAULICS

OXYGEN

PRESSURE TANK

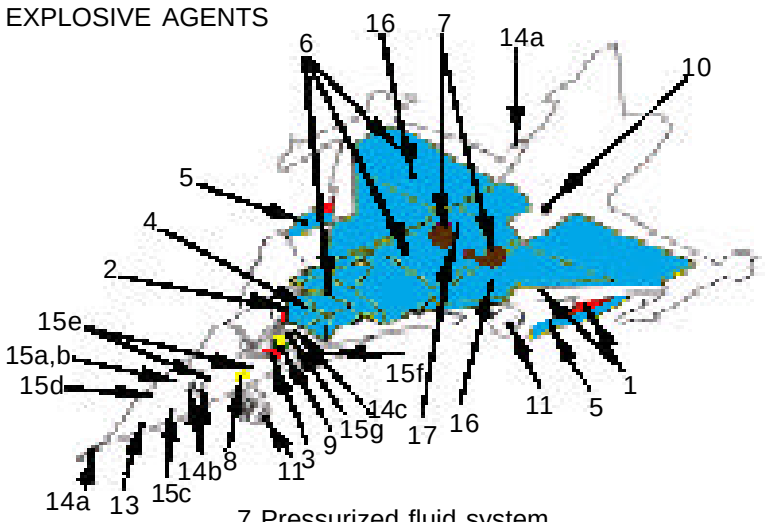

1 Ejector release unit pylons 2, 3 and 5 Powder 2 x 0.44 oz (12.5g)

2 Powder charges, seat, (chute deployer, body fixtures etc, 12 pcs) Powder 7 oz (200g)

3 Powder rocket engine Powder 1x97 oz (2750g)

4 Canopy fracturing syst. Explosive agent 0.8 oz (23g) (of which 0.7 oz (20g) in the canopy)

5 Drop tanks Aviation turbine fuel (JP8)

6 Fuel tanks: Aviation turbine fuel (JP8)

7 Pressurized fluid system Norm op: 280 atm (28 MPa) Reserve and emergency-supply pressure 200 atm (20 MPa) Return system pressure 6.5 atm (0.65 MPa)

8 Oxygen container: 1x3.7 FT^3 (14 L), 150 atm (15 MPa) at + 27 °F (+15 °C)

9 Emergency oxygen unit: 1x 0.11 FT^3 (0.4 L) 175 atm (17.5 MPa) at +27 °F (+15 °C)

10 Fire extingusher: Halon 1301, 0.1 FT^3 (0.3 L) 40 atm (4 MPa) at +36 °F (+20 °C) Explosive agent 0.02 oz (0.5 g)

11 Fusible plugs: Melting temp: 360 °F (200 °C)

12 Pressurized fluid system: landing gear 280 atm (28 MPa) and landing gear shock absorbers Main landing gear 9.5 atm (0.95 MPa) resp 76 atm (7.6 MPa) Nose gear 12 atm (1.2 MPa)

13 Evacuation indicator Oxygen 180 °F (100 °C)

14 Primary data sensors
- a Pitot 720 °F (400 °C)
- b alfa, beta sensors (360 °F, 200 °C)
- c Temp sensor (450 °F, 250 °C)

15 Beryllium copperoxide ceramics
- a Transceiver RHM
- b Receiver TILS
- c Power amplifier
- d Waveguide/Wave-guide unit
- e DC/DC transducer
- f Identification system

16 Air cylinders Rb 74/ AIM 9L 2x0.7 FT^3 (2.5 L) 152 - 210 atm (15.2 - 21MPa)

17 Thermal batteries,3 pcs (Activated batteries approx: 540 °F, 300 °C) Explosive agent 0.02 oz (0.5 g)

AIRCRAFT HAZARDS - Continued

DIMENSIONS	JAS 39B
Length	49 FT (15 M)
Wing span	29.5 FT (9 M)
Height to wing-tips with extended landing gear	7 FT (2 M)
Height to canopy rail	
· extended landing gear	7 FT (2 M)
· retracted landing gear	4.3 FT (1.3 M)
Take-off weight (assumes "clean" aircraft)	17600 LB (8 tons)

FUEL	
Aviation turbine fuel	(JP8)
Capacity	1055 FT^3 (4000 L)
	7700 LB (3500 KG)

HYDRAULICS	
Hydraulic fluid	021
Tank volume	7.9 FT^3 (30 L)
Pressure accumulator	2 pcs

HALON	
Fire extinguisher	0.08 FT^3 (0.3 L)

OXYGEN	
Oxygen (GOX) container	2 x 3.7 FT^3 (14 L)
Emergency oxygen (GOX) container	2 x 0.11 FT^3 (0.4 L)

EXPLOSIVES	
Propellant charges (powder effects) for:	
· armament pylons	
· ejection seat/s	
· canopy transparency bursting	
· fire extinguisher	
. thermal batteries	3 pcs

BATTERIES	
Aircraft battery	NiCd 27 Ah

CRYOGENIC GAS INSTALLATION RB74 (AIM-9L)	
-Compressed-air container	2x0.7 FT^3 (2.5L)
-Loading pressure	152 - 210 atm (15.2 -21.0 MPa)

POWER AND EXPLOSIVE AGENTS

FUEL TANKS

HYDRAULICS

OXYGEN

PRESSURE TANK

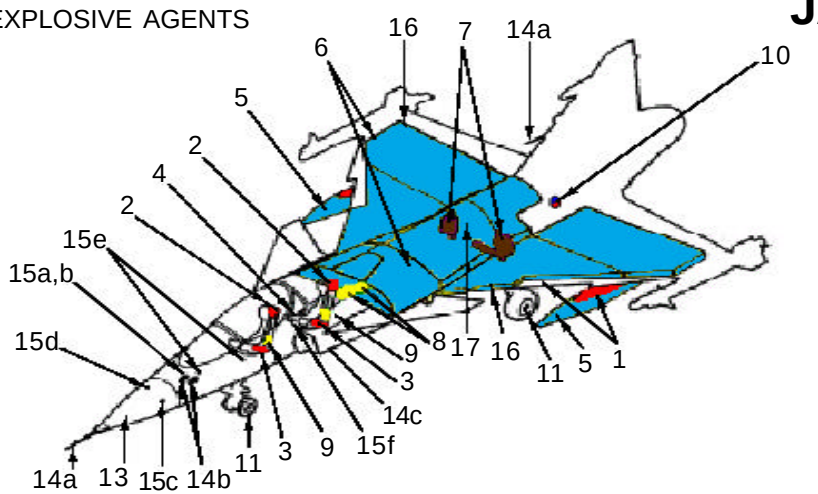

1 Ejector release unit pylons 2, 3 and 5 Powder 2 x 0.44 oz (12.5g)

2 Powder charges, seat, (chute deployer, body fixtures etc, 12 pcs) Powder 16 oz (450g) (tot 32.5 oz, 920g)

3 Powder rocket engine Powder 2x106 oz (3 kg)

4 Canopy fracturing syst. incl: Protective pad: Front: 1.6oz, 45g, of which 1.2oz, 35g in the canopy Rear: 5.3oz, 150g, of which 1.2oz, 35g in the canopy

5 Drop tanks Aviation turbine fuel (JP8)

6 Fuel tanks: Aviation turbine fuel (JP8)

7 Pressurized fluid system Norm op: 280 atm (28 MPa) Reserve and emergency-supply pressure 200 atm (20 MPa) Return system pressure 6.5 atm (0.65 MPa)

8 Oxygen (GOX) container: 2x3.7 FT^3 (14 L), 150 atm (15 MPa) at + 27 °F (+15 °C)

9 Emergency oxygen (GOX) cont: 2x 0.11 FT^3 (0.4 L) 175 atm (17.5 MPa) at +27 °F +15 °C)

10 Fire extingusher: Halon 1301, 0.1 FT^3 (0.3 L) 40 atm (4 MPa) at +36 °F +20 °C Explosive agent 0.02 oz, 0.5 g

11 Fusible plugs: Melting temp: 360 °F, 200 °C

12 Pressurized fluid system: landing gear 280 atm 28 MPa and landing gear shock absorbers Main landing gear 5 atm 0.5 MPa resp 76 atm 7.6 MPa Nose gear 12 atm 1.2 MPa

13 Evacuation indicator Oxygen (GOX) 180 °F, 100 °C

14 Primary data sensors
- a Pitot 720 °F, 400 °C
- b alfa, beta sensors (360 °F, 200 °C)
- c Temp sensor (450 °F, 250 °C)

15 Beryllium copperoxide ceramics
- a Transceiver RHM
- b Receiver TILS
- c Power amplifier
- d Waveguide/Wave-guide unit
- e DC/DC transducer
- f Identification system

16 Air containers Rb 74/ AIM 9L 2x0.7 FT^3 (2.5 L) 152 - 210 atm (15.2 - 21MPa)

17 Thermal batteries,3 pcs (Activated batteries approx: 540 °F, 300 °C) Explosive agent 0.02 oz (0.5 g)

AIRCRAFT HAZARDS - Continued

1. RADAR TRANSMISSION HAZARD

NOTE:

The aircraft contains safety functions which automatically prevent unintentional radar transmissions from the radar when the aircraft is on the ground, parked or moving. Danger areas for radar beams when the engine is running and the undercarriage retracted.

a. As soon as possible, after the crewmember is rescued, the following actions shall be taken: To prevent unintentional radar transmissions, ensure power switch RR transmit (RR SÄND) on the ground crew service panel is in the OFF (FRÅN) position.

b. Place the battery switch, (BATT.STRÖM) located on the ground service panel, in the OFF (FRÅN) position.

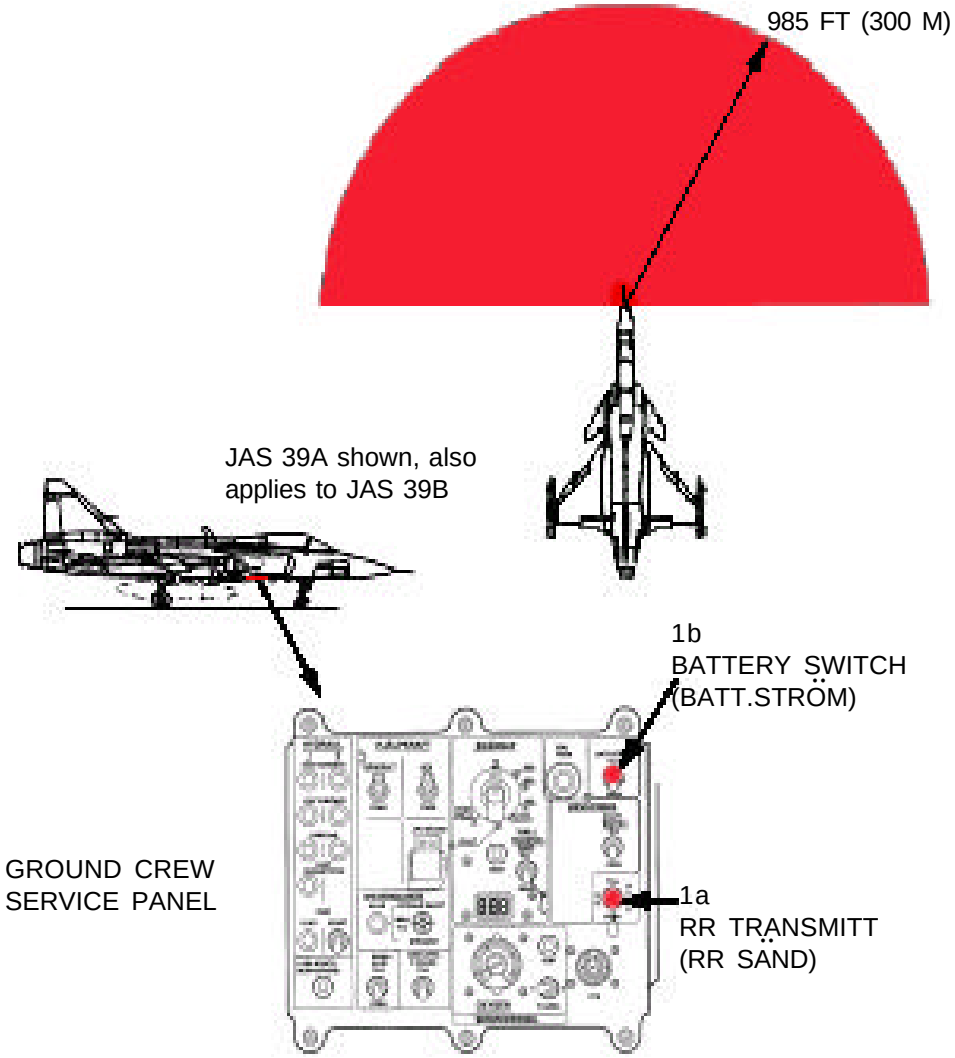

ENGINE FIRE ACCESS AREAS

1. ENGINE FIRE ACCESS AREAS

WARNING

When the green FCS OFF (ESS FRAN) lamp is not on, proceed with the utmost caution since the canards can move considerably. If the lamp is on, it can be seen from the outside even when the panel is closed. It is difficult to hear whether the engine is running or not when the APU is operating.

a. Engine fire access panels are located in the aft fuselage, at the upper and lower sections.

b. APU fire acess is located at the aft APU air intake panel under the left fuselage section.

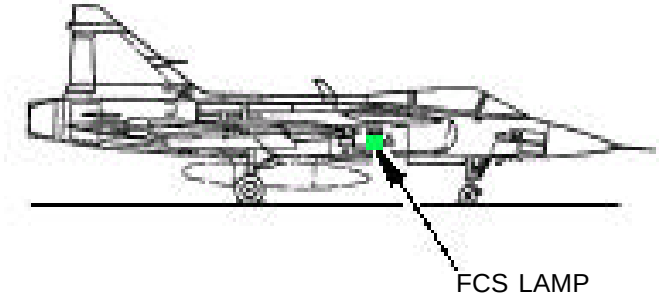

1a
ENGINE FIRE ACCESS PANELS

1b
APU AIR INTAKE PANEL

EMERGENCY ENGINE SHUTDOWN

1. EMERGENCY ENGINE SHUTDOWN

a. Access the emergency engine shutdown plexiglass shield, located on the aft right fuselage parallel to the vertical stabilizer, by walking on the right wing.

b. Break the plexiglass shield with a metal object or tool.

c. Pull out the emergency engine shutdown cable, located inside the plexiglass shield.

d. Walk back to ground level with cable in hand.

NOTE:
If the crewmember has shut the LT-cock with the switch in the cockpit, the cable will not offer any resistance upon cable removal.

e. Pull cable in the direction of flight and into the locked position by bending the cable 90 degrees over the edge of the recess. Engine will shutdown after 40 to 70 seconds.

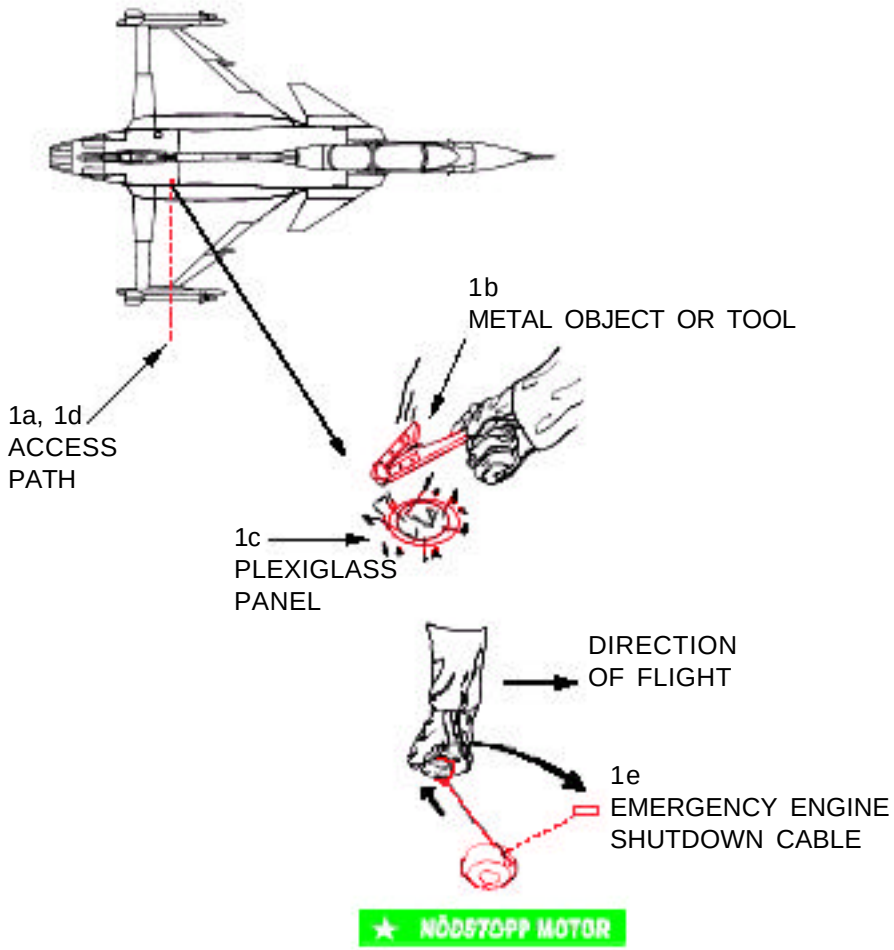

SPECIAL TOOLS/EQUIPMENT
Power Rescue Saw

AIRCRAFT ENTRY - JAS 39A/B

WARNING

Do not open canopy with engine running.

1. NORMAL ENTRY

a. Depress the thumb catch on the outer operating canopy handle release lever, marked “TRYCK” (PUSH), located on the forward right side of the fuselage under the canopy rail.

b. Pull the back-end part of the exposed handle outward approximately 90 degrees to release the canopy handle catch.

c. Pull the canopy handle obliquely outward and forward to activate canopy opening.

NOTE:
If the canopy actuator does not activate, due to a power failure, see next procedure.

WARNING

If the canopy is closed, canopy glass can be broken by the crewmember activating the manual canopy fracturing initiation handle. Fracturing can cause risk of injury from flying glass splinters. If possible, co-operation between crewmember and rescue personnel is requisite.

2. EMERGENCY ENTRY - JAS 39A

a. By using the previous procedure, the canopy will be open slightly. If the canopy can not be opened by hand, try to force canopy open with a tool in the gap between the canopy and railing. Open approximately 15 degrees.

b. Grasp the internal emergency release handle, turn handle forward and pull. The canopy will be released from the canopy actuator. Open the canopy to the left until fully open.

3. CUT-IN - JAS 39A

a. Cut-n canopy using a tool to break the canopy glass. It is not dangerous to hammer or saw through detonating cables.

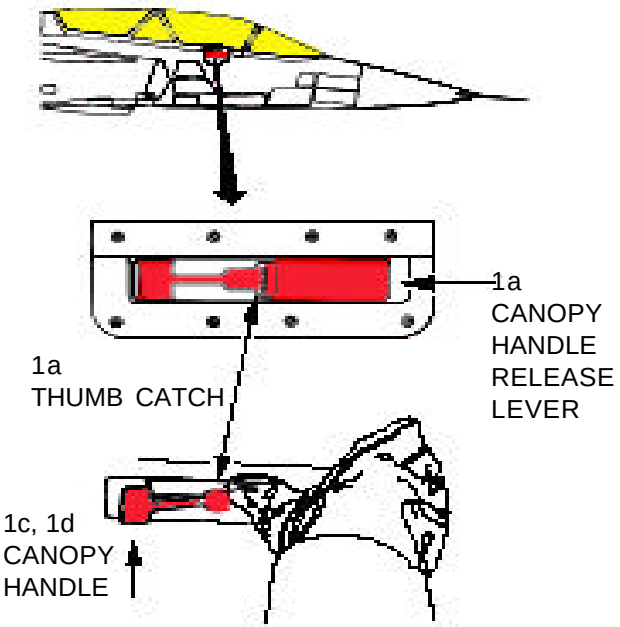

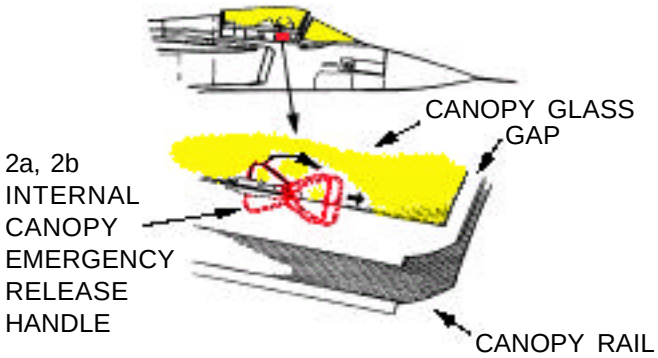

AIRCRAFT ENTRY - Continued

4. EMERGENCY ENTRY - JAS 39B

WARNING

Do not open canopy with engine running.

a. By using the NORMAL ENTRY procedure, the canopy will be open slightly. If the canopy can not be opened by hand, try to force canopy open with a tool in the gap between the canopy and railing. Open approximately 15 degrees.

NOTE:
Emergency release is not possible if the canopy is opened more than 61degrees. The canopy weighs approximately 198 LB (90 KG).

b. Grasp the internal emergency release handle, turn handle forward and pull. The canopy will be released from the canopy actuator. Open the canopy to the left until fully open.

5. CUT-IN - JAS 39B

a. Cut-n canopy using a tool to break the canopy glass. It is not dangerous to hammer or saw through detonating cables.

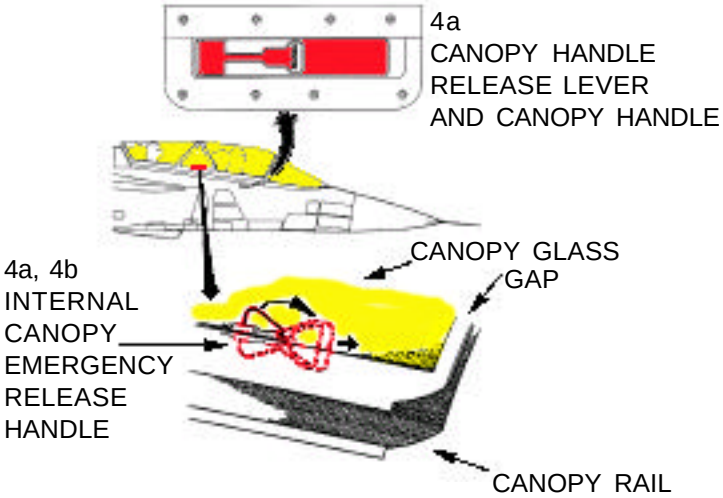

ENGINE, APU AND OXYGEN SHUTDOWN

1. ENGINE, APU AND OXYGEN SHUTDOWN

NOTE:
Placement and execution of points a, b and e are indentical in the forward and aft cockpits, while points c, d and f are only executed in the forward cockpit.

a. Place safety catch, located on the control stick, in the SAFE position.

b. Turn off the LT-COCK power switch, located on the right console under the protective lid, and keep in the OPEN position. The LT-COCK is sealed open in the JAS 39B rear cockpit.

c. Press and release the APU power switch, located on right cosole. Check the APU RUN indicator goes off. If not, check the EMERGENCY start button. Press and release the button if necessary.

d. Place the power switch, located on the right console, in the F position.

e. Place the oxygen cock, located on the right forward console, in the F (shut) position. A red indication on the cock indicates a ARMED condition.

f. Lift up and move to the F position to turn off the ESS power switch, located on the right console.

g. Check the crewmember for breathing. Loosen the face mask, if necessary, by pressing mask tabs inward.

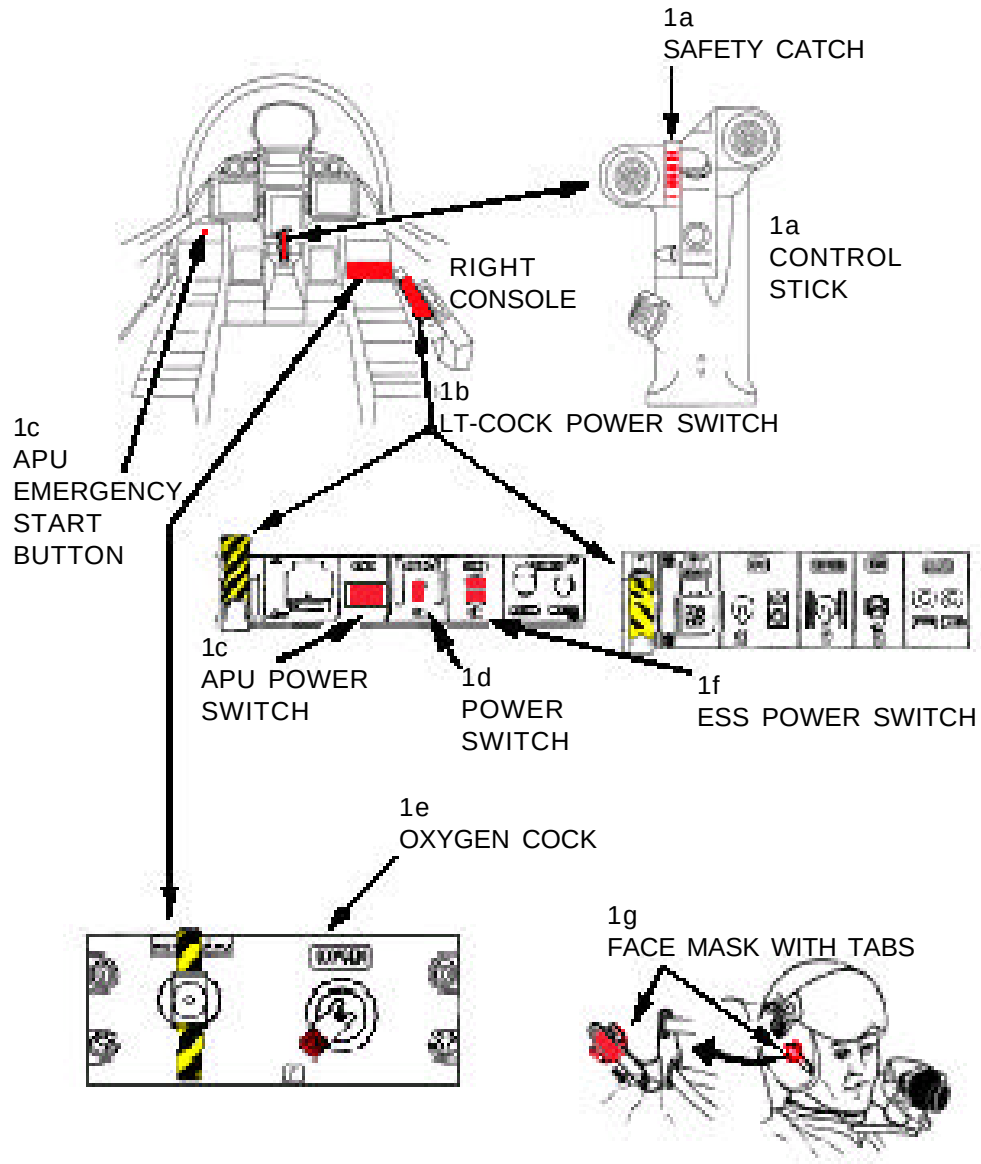

AIRCREW EXTRACTION

1. AIRCREW EXTRACTION

WARNING

The ejection seat(s) shall be safetied prior to any activity in the cockpit and maneuvering of switches or controls. This is applicable for both the forward and aft seats in JAS 39B. If the forward seat is not safetied, the aft seat can ejection even when safetied.

NOTE:
The canopy fracturing system is automatically secured when the canopy is open, but the rocket ejection seat must be safetied manually. The protective pad in the canopy fracturing system is safetied when the seats are safetied.

a. Safe the ejection seat(s) by pulling up the seat safetying handle to the LOCK position. The seat safetying handle is placed in the right side of the ejection seat and is safetied when the handle is red and indicated the text “SECURED” (SAKRAD).

b. Loosen the left and right arm restraints by pressing the lock sides.

c. Disconnect the life-raft wire by releasing the lock on the arm restraint jacket’s lower left corner.

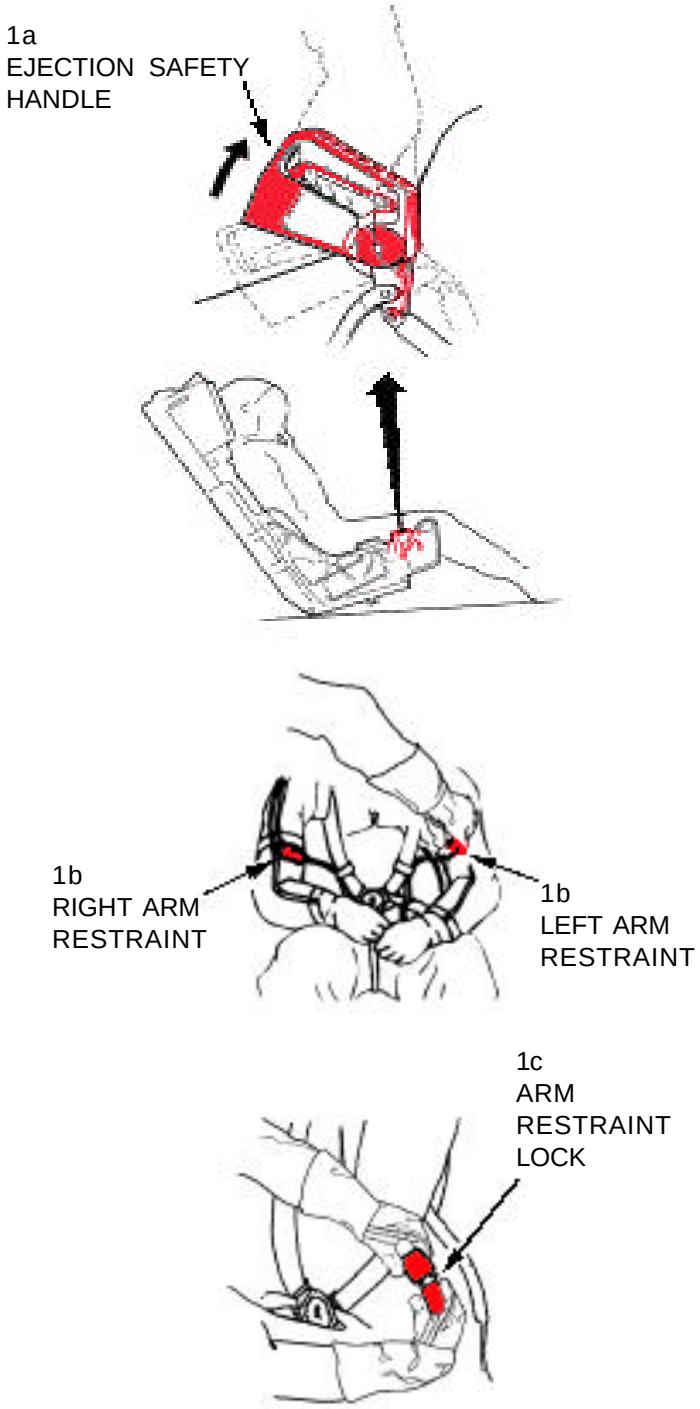

AIRCREW EXTRACTION - Continued

1. AIRCREW EXTRACTION - Continued

WARNING

The ejection seat(s) shall be safetied prior to any activity in the cockpit and maneuvering of switches or controls. This is applicable for both the forward and aft seats in JAS 39B. If the forward seat is not safetied, the aft seat can ejection even when safetied.

NOTE:

The following action(s) are not to be carried out if it is for rescue training. For training: loosen the connections manually in sequence.

d. Pull the reserve-release handle marked MANUAL SEPARATION, by depressing the latch in the reserve-release handle and pull all the way out. This action will occur automatically: (1) leg-fixtures release, (2) center fixture releases for the oxygen hose, telephony and anti-G suit connections.

e. Release the harness center-lock, to release the safety belts, shoulder harness and crotch strap, by pushing the center lock and then turning the center lock to unlock the harness assembly.

2. LIFTING OUT THE CREWMEMBER

NOTE:

During training involving operational aircraft, extraction is not to be practised due to the risk of damaging instruments, etc. Lifting the crewmember from the aircaft should be carried out as care fully as possible taking into account any injuries the crewmember might have.

a. Grasp the crewmember under the arms and lift upwards.

b. Change grip by using knees to hold the crewmember, and lift the crewmember out of the cockpit. Hand the crewmember over to another rescueman on the ground.

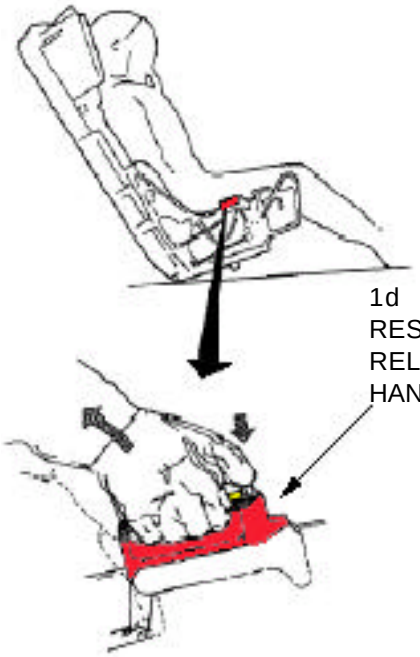

1d
RESERVE
RELEASE
HANDLE

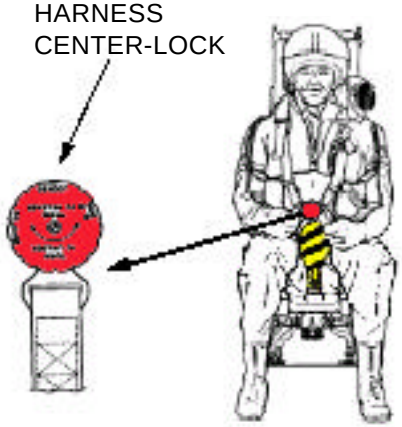

1e
HARNESS
CENTER-LOCK

2a
EXTRACTION POSITION
LIFTING CREWMEMBER
FROM COCKPIT

2b
EXTRACTION POSITION
HANDING CREWMEMBER TO
RESCUEMAN ON GROUND

AIRCRAFT TOWING AND WINCHING

1. AIRCRAFT TOWING AND WINCHING - JAS 39A/B

a. To tow and winch backward, attach routings around both intakes. Tow/winches: Straps (four). Couplings (two).

b. To tow and winch forward, attach routings around open cockpit and under nose of aircraft. Tow/winches: Couplings (two). Harnesses (two).

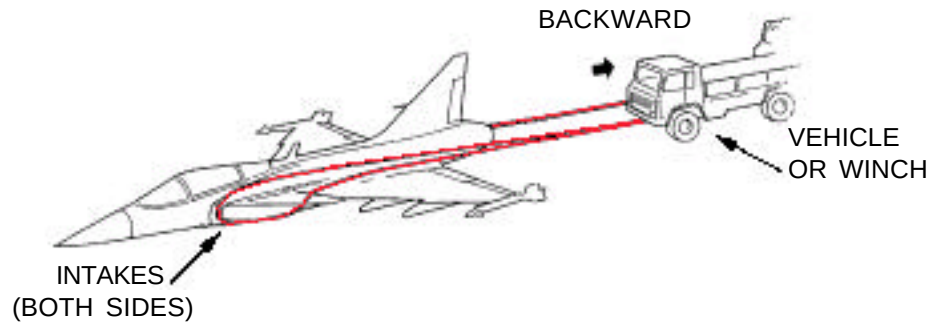

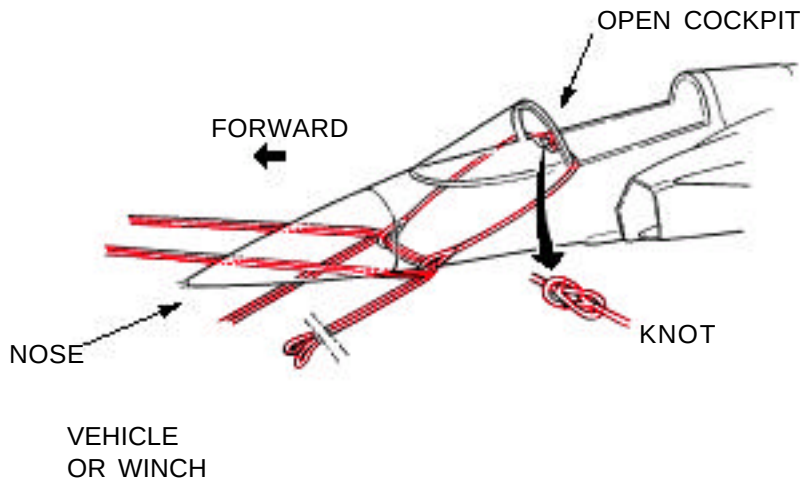

MIG 29

SPECIAL TOOLS/EQUIPMENT
Power Rescue Saw
Crash Ax

AIRCRAFT ENTRY

1. NORMAL ENTRY

WARNING

The opened canopy has to be secured with a hold open strut. Falling canopy can injure personnel during rescue, entry, or extraction procedures.

NOTE:
Normal and emergency controls are located on left side of fuselage only.

a. Push button at right end of external locking lever, located on left side of fuselage below windshield, to release.

b. Rotate external locking lever clockwise to open canopy.

2. EMERGENCY ENTRY

a. Release canopy as described in step 1a.

b. Push button from handle grip on canopy frame.

c. Take the outcoming handle grip and lift the canopy.

3. CUT-IN

a. Cut-in canopy along canopy frame on all four sides. Lift cut canopy glass and discard.

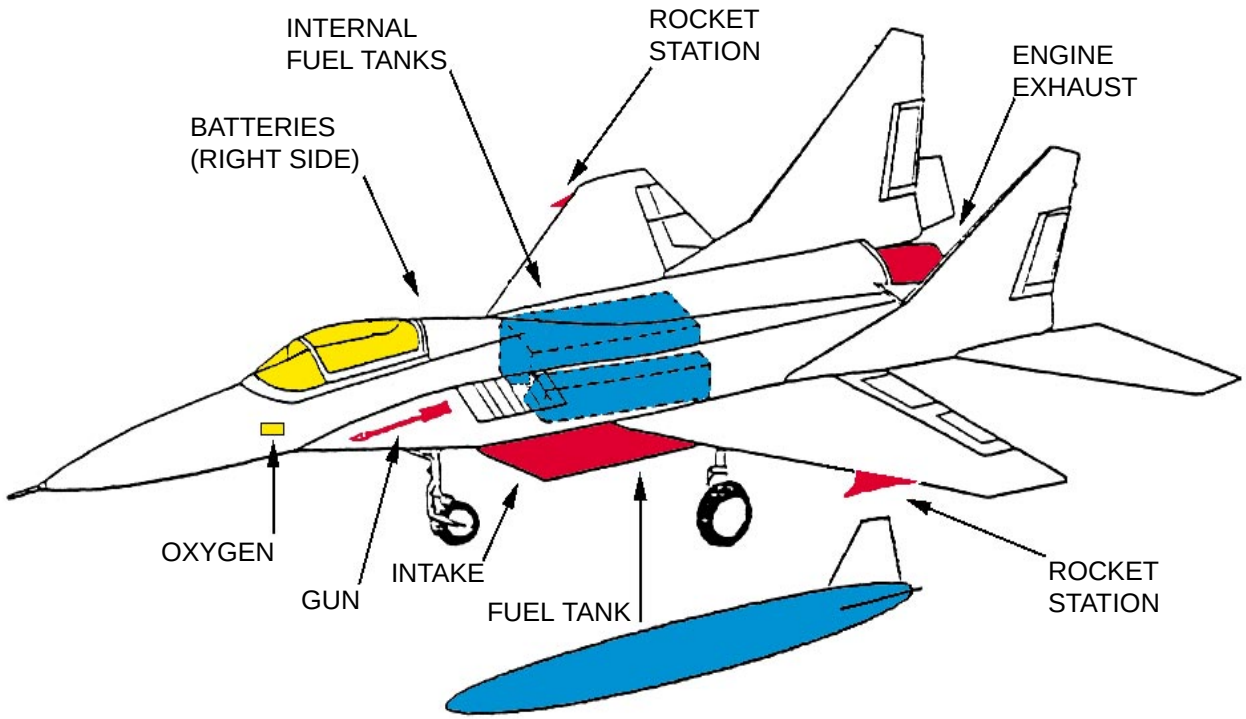

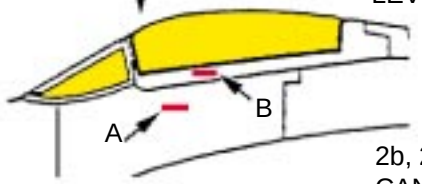

LEFT SIDE VIEW

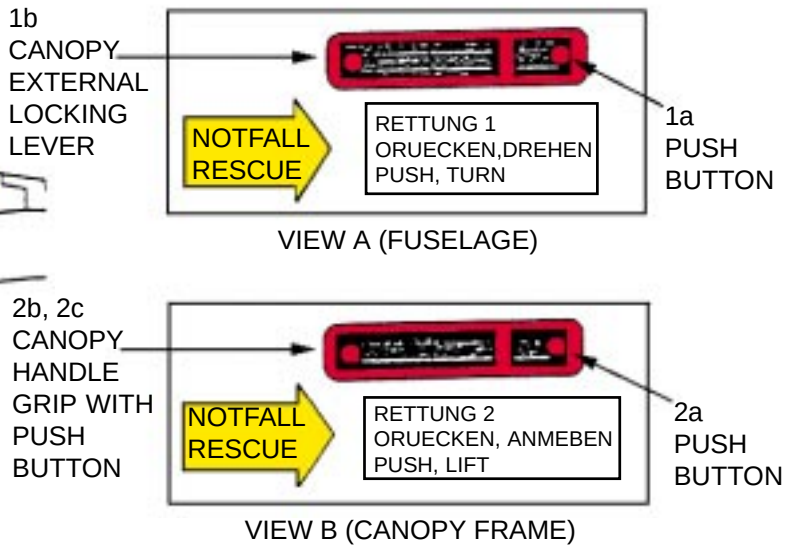

ENGINE SHUTDOWN

1. ENGINE SHUTDOWN

a. Retard throttles, located on left console to IDLE position.

b. Press IDLE-SPEED-STOP switch located on throttle.

c. Pull throttle to CUT-OFF position.

d. Place both fuel shutoff switches, located on left side console above throttle, to OFF position.

e. Turn off battery power, if required.

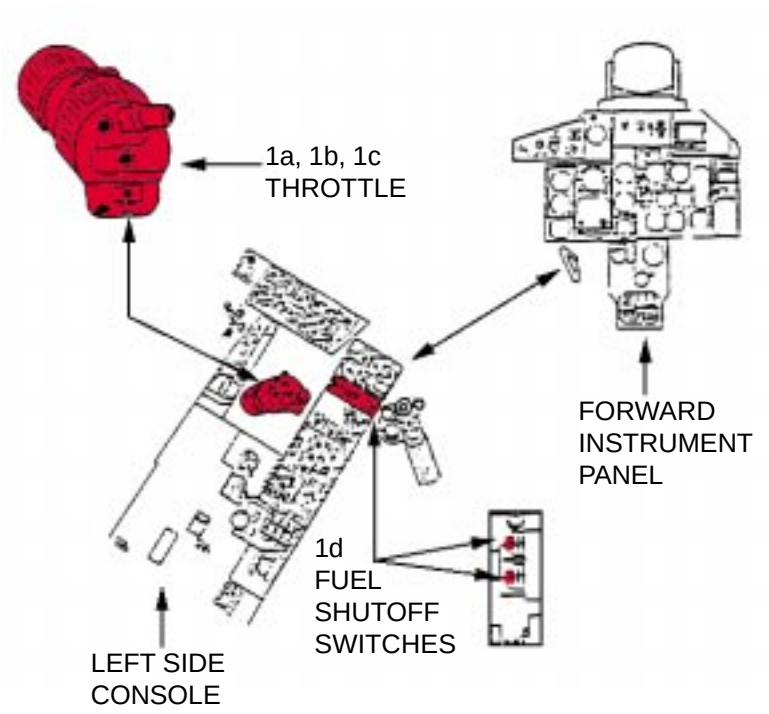

SEAT SAFETYING AND AIRCREW EXTRACTION

1. SEAT SAFETYING

NOTE:
No safety pins are required to safe the ejection seat.

WARNING

Use extreme caution when pushing catapult handle forward. DO NOT PULL UP. Death or injury will result from ejected seat.

a. Carefully push catapult handle forward, located on forward center of seat bucket between crewmember's legs, toward center console.

2. AIRCREW EXTRACTION

a. Lift up belt security from quick release box.

b. Press locking mechanism to free all belt hooks.

c. If back or neck injury is suspected, do not remove helmet. Immobilize crewmember's head prior to removal from aicraft.

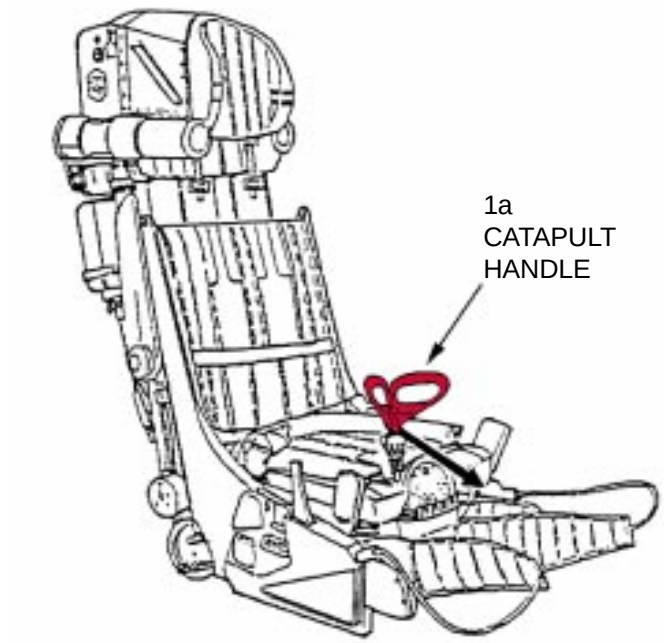

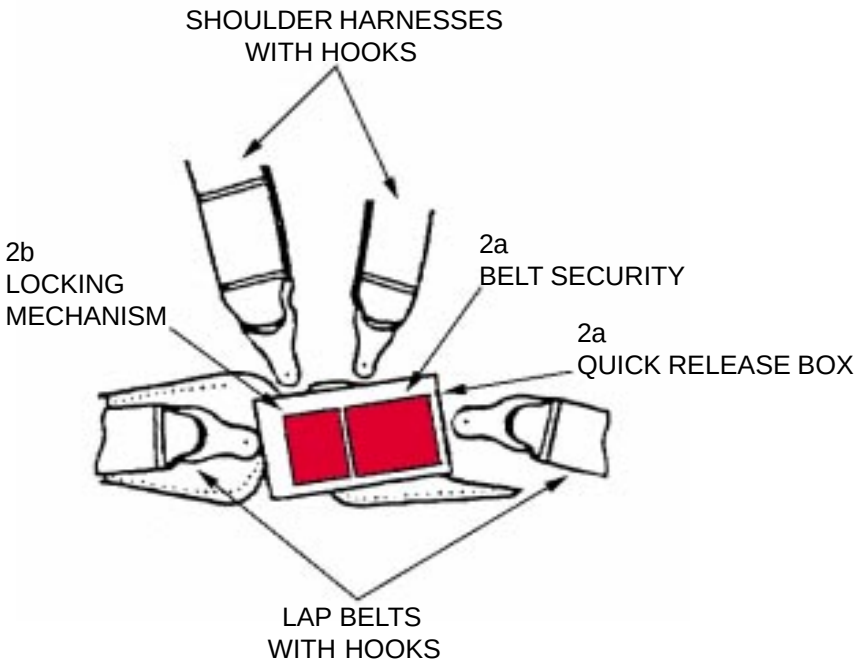

AIRCRAFT DIMENSIONS

PA 200 TORNADO

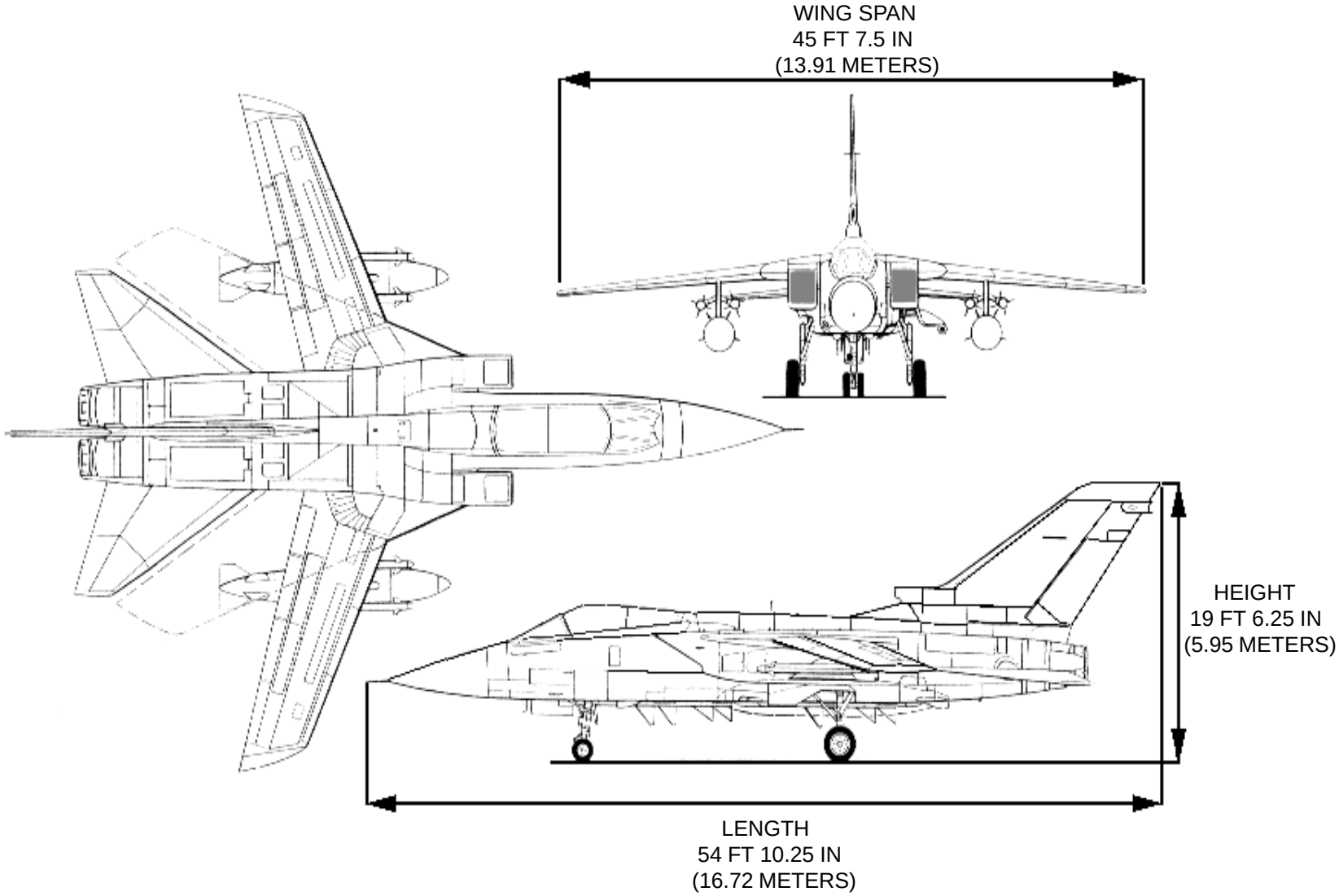

AIRCRAFT HAZARDS

PA 200 TORNADO

OTHER HAZARDS:
Battery acid
Assisted escape system
Asbestos
Beryllium + beryllium oxides
Bromochlorodifluoromethane (BCF Fire Extinguishant)
Bromotrifluoromethane (BTM Fire Extinguishant)
Cadium (Battery/Bolt protection/Steel protection
Cartridge operated equipment
Composite Materials (Man-made mineral fibres)
Coolanol
Chaff Dispenser
Dimethylformamide (Strobe power pack)
Ejector release units
Flare dispenser
Lithium (Batteries)
Mercury (Temperature bulbs)
Miniature Detonating Cord (MDC)
Polytetrafluoroethylene
Potassium Hydroxide
Radioactive sources
Sonar locator beacon(s) (1-Lithium battery)
Thallium
Thorium Fluoride
Weapon Load
Zinc Selenide
Fuel: Avtur
Hydraulic oil: OM-15
High pressure gases: Nitrogen
Engine oil: OX-26
Oxygen: LOX

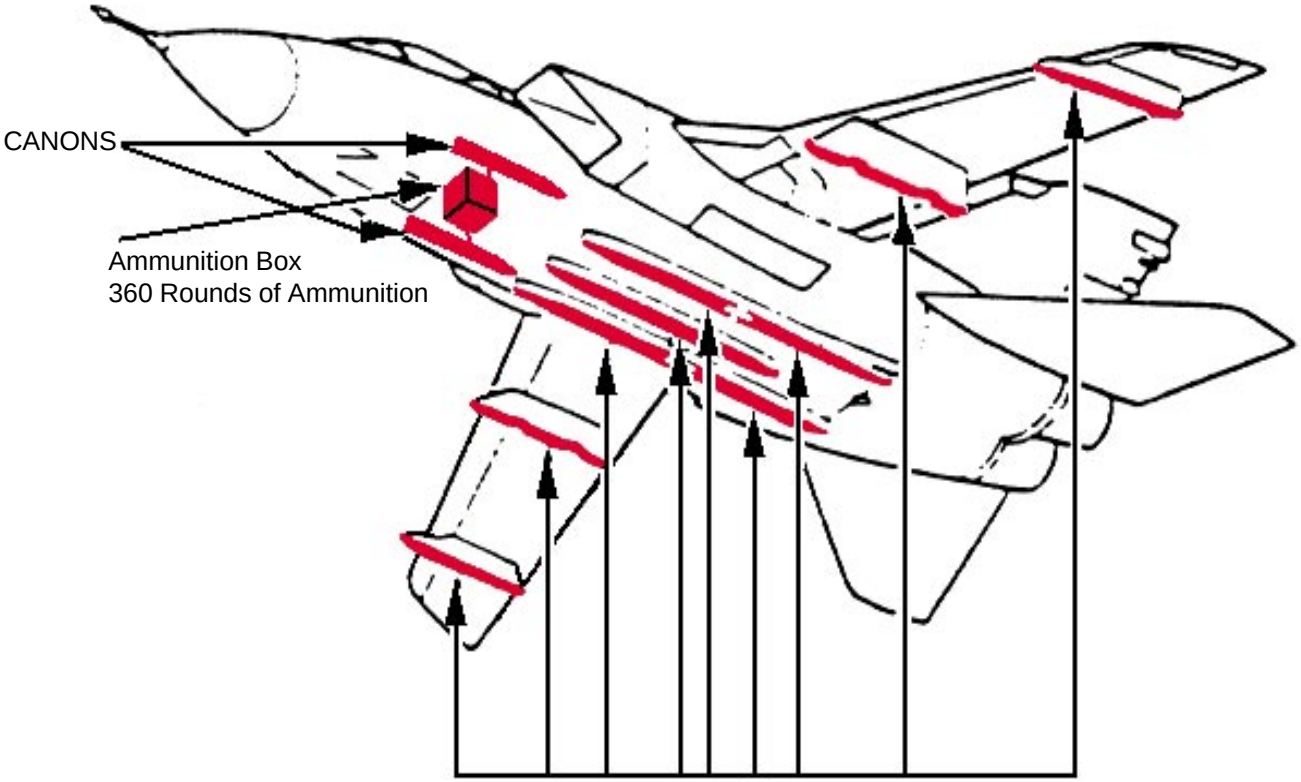

NOTE:
A variety of missles are carried externally on 9 pylons.

AIRCRAFT HAZARDS-Continued

PA 200 TORNADO

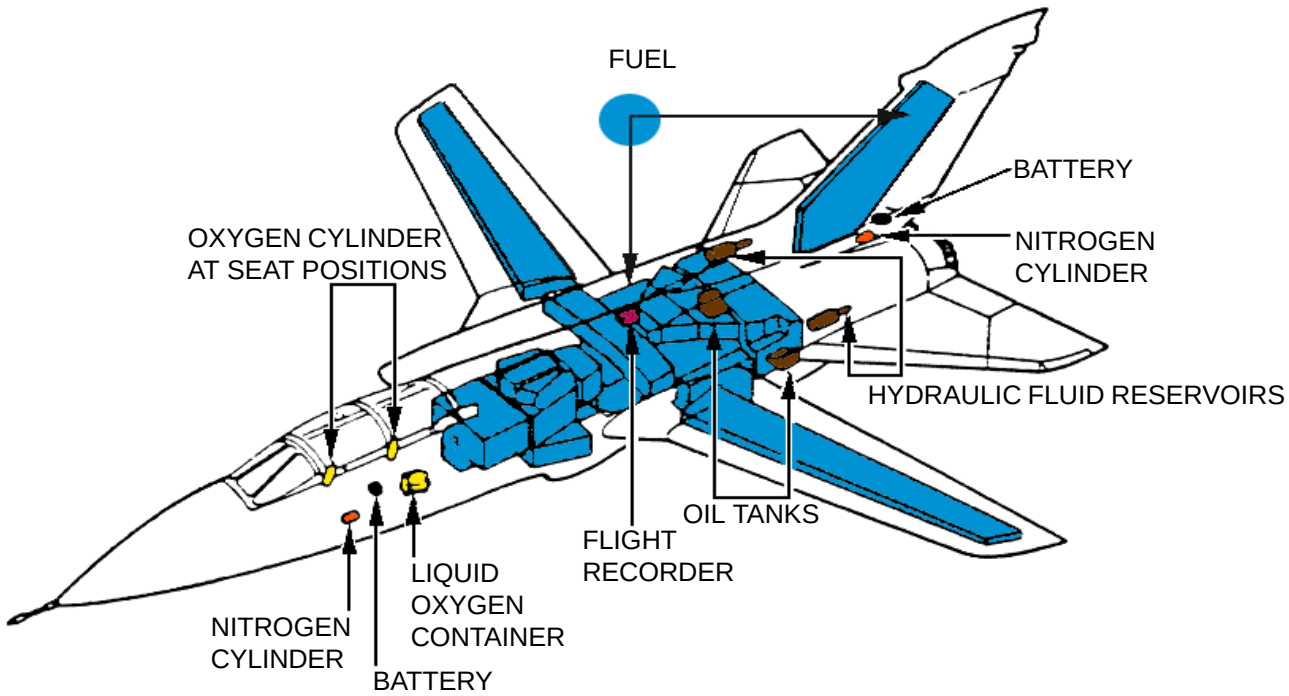

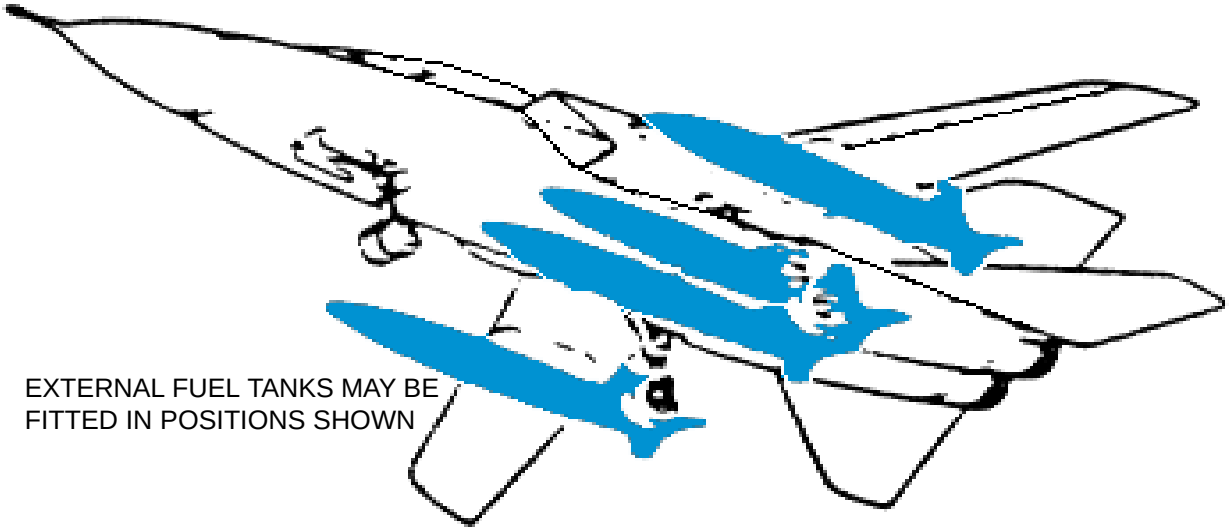

PA 200 TORNADO

SPECIAL TOOLS/EQUIPMENT
Power Rescue Saw
Crash Ax

AIRCRAFT ENTRY

1. NORMAL ENTRY

a. Press access door, located on left side of the fuselage, release lever and pull lever to STOP position.

2. MANUAL ENTRY

a. Pull yellow/black marked O-handle, located behind normal entry release lever, to STOP position. (Not illustrated.)

b. Press canopy upwards and install steadying strut.

3. EMERGENCY ENTRY

WARNING

Personnel other than the operator of the emergency release explosive canopy handle must stand well clear of the aircraft. Handle is located on port side of aircraft and has Mild Detonating Cord (MDC)installed.

a. Break the frangible panel, located on the left side of the fuselage, by striking it in the center with the heel of the hand with fist clenched, to expose emergency canopy handle.

b. Grasp the emergency canopy handle with the right hand and move forward and away along a line approximately 45 degrees to the fuselage until the cable becomes taut.

c. Facing away from the aircraft with handle in the right hand, pull the handle sharply.

4. CUT-IN

a. If emergency entry can not be accomplished, use the power rescue saw or crash ax to enter cockpit area. Cut all four sides to gain access.

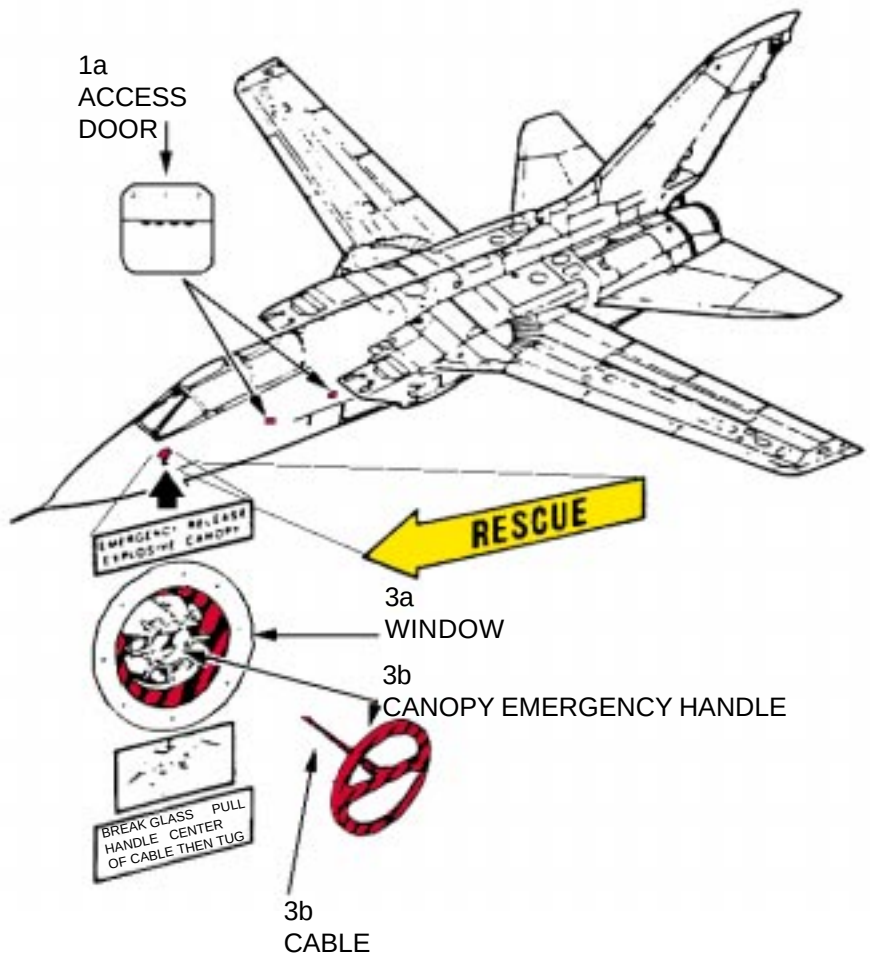

ENGINE SHUTDOWN

1. ENGINE SHUTDOWN

a. Retard throttles, located on left console to IDLE, then press idle detent stop levers and place throttles in OFF position.

b. If throttles are jammed, the engines have to be shutdown with the fuel shutoff switches, located left panel. Lift cover of fuel shutoff switches and place switches downwards to OFF position.

c. Lift up yellow/black marked “CRASH BAR”, located left console and push crash bar frontwards to STOP position.

d. Insert safety pin marked “EPS”, located in the right console, into the EPS switch, located in the yellow/black marked area of the right front panel.

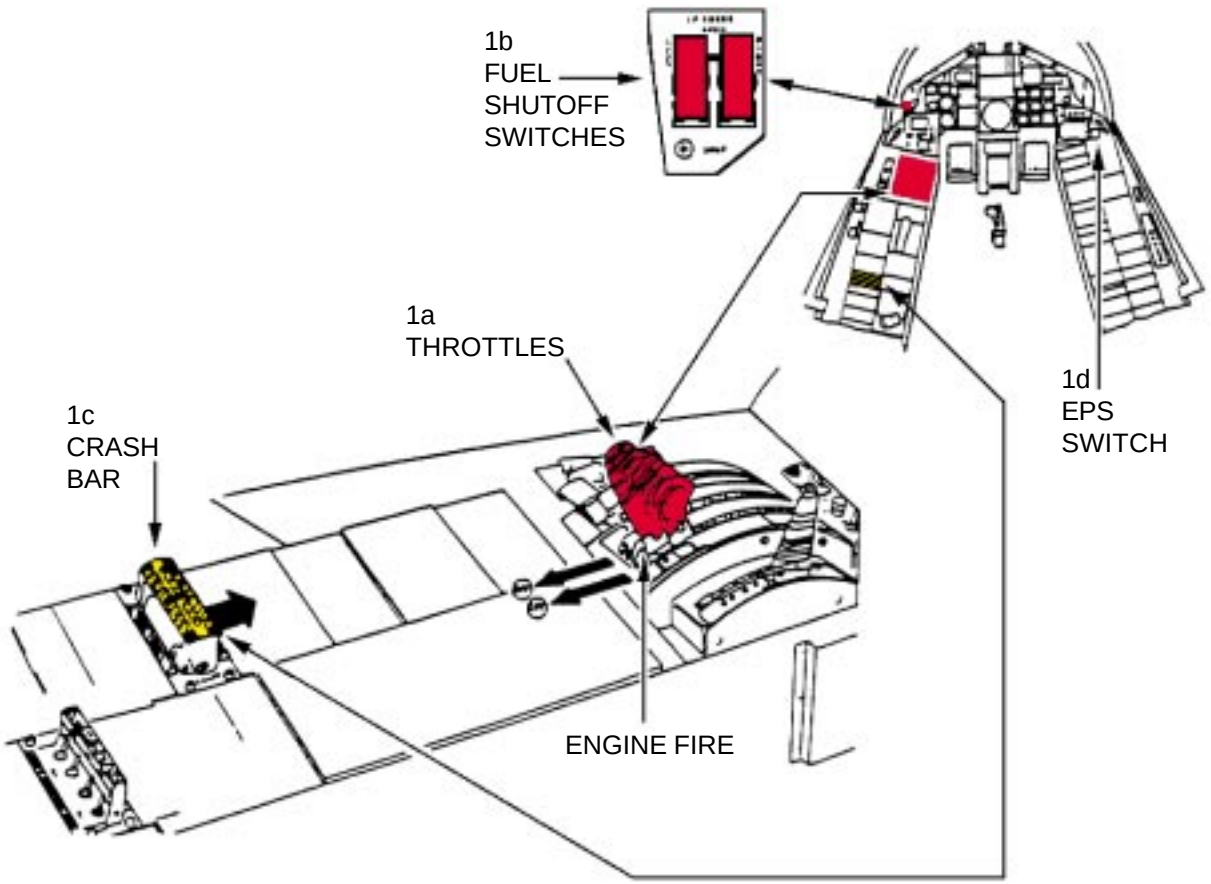

SEAT SAFETYING AND AIRCREW EXTRACTION

1. SEAT SAFETYING

a. Insert safety pins marked “SEAT”, located in sockets of right consoles in front and aft cockpits, in ground ejection D-rings, located between legs of crewmembers.

b. Press in ball locks of safety pins during insertion, then release ball locks to lock pins in place.

NOTE:
If ball lock can not be depressed, internal pin damage has occurred, replace safety pin to prevent unsafe condition.

2. AIRCREW EXTRACTION

a. Rotate outer assembly of harness release dial 1/4 turn clockwise to STOP position and strike firmly to open.

b. Lift up release handle, located lower left side of ejection seat to release crew-member’s half of PEC and leg restraint lanyards.

NOTE:
If PEC, fitted with spring detent stop is used, press release button, located inside of handle to release.

c. Press silver colored press keys of green lap belt to disconnect the dinghy line from PEC unit.

d. To release arm restraint lanyards, squeeze press keys of green lap belt.

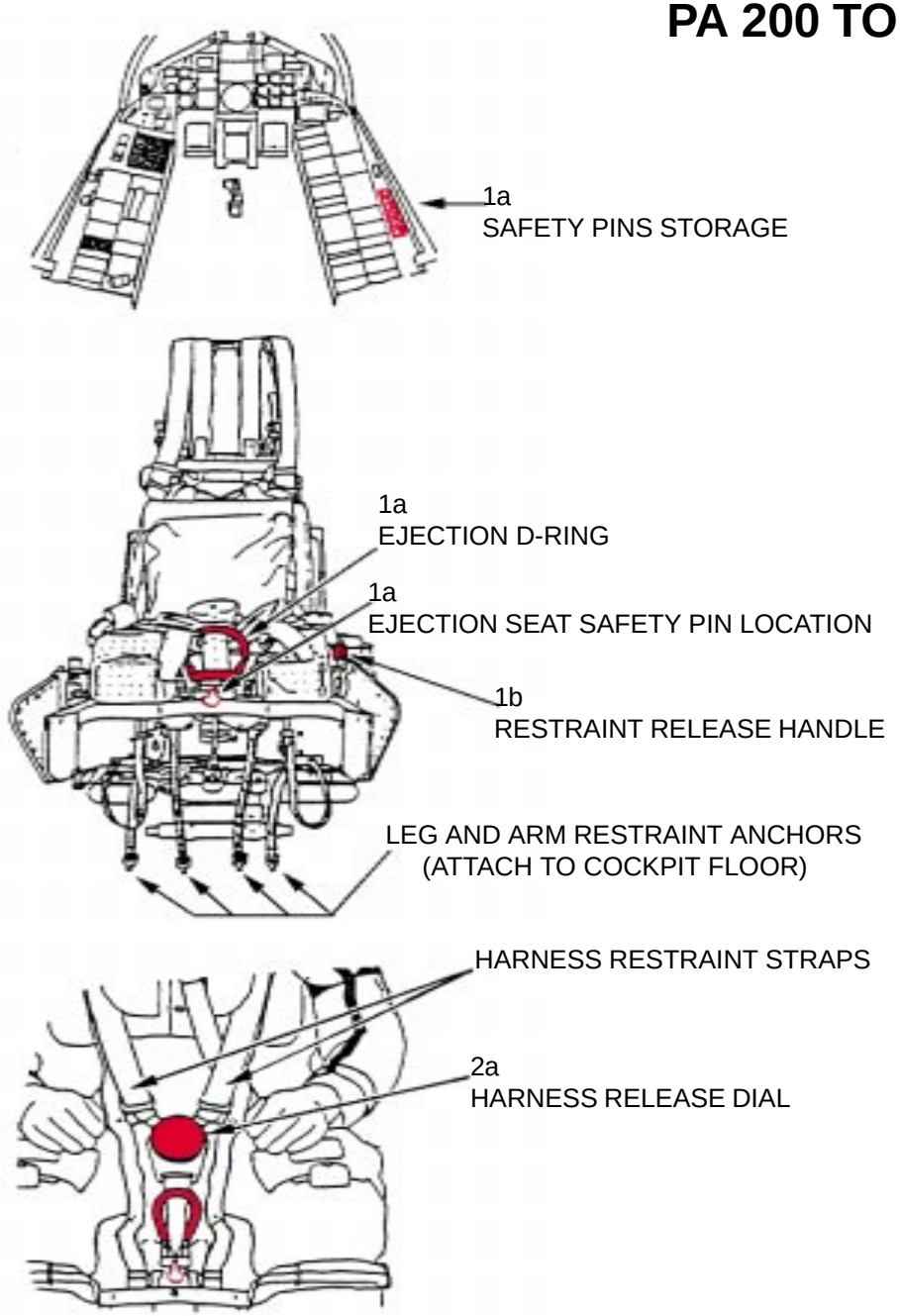

AIRCRAFT PAINT SCHEME

RAFALE A

AIRCRAFT DIMENSIONS

RAFALE A

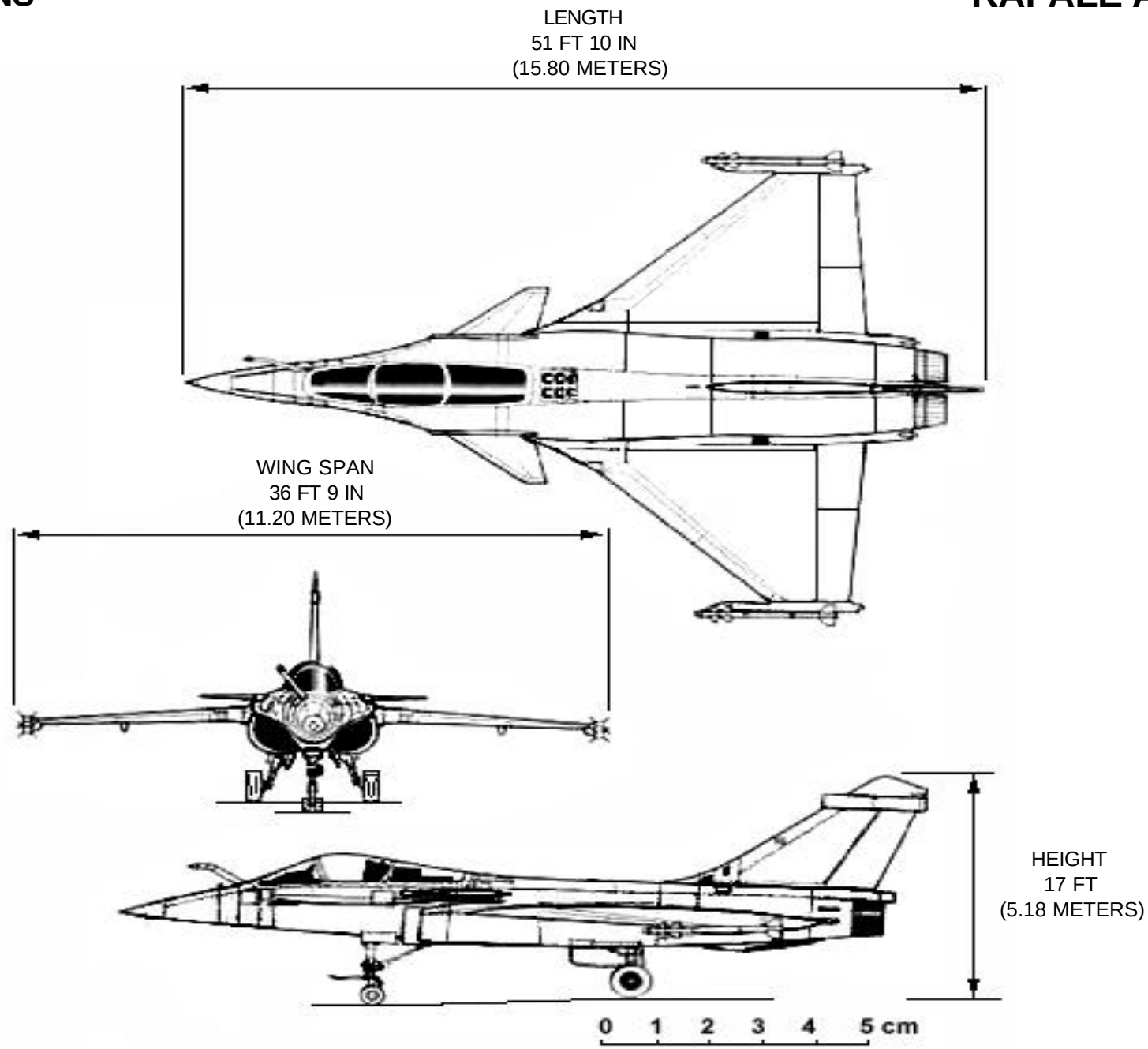

AIRFRAME MATERIALS

RAFALE A

CARBON

KEVLAR

TITANIUM

ALUMINUM LITHIUM

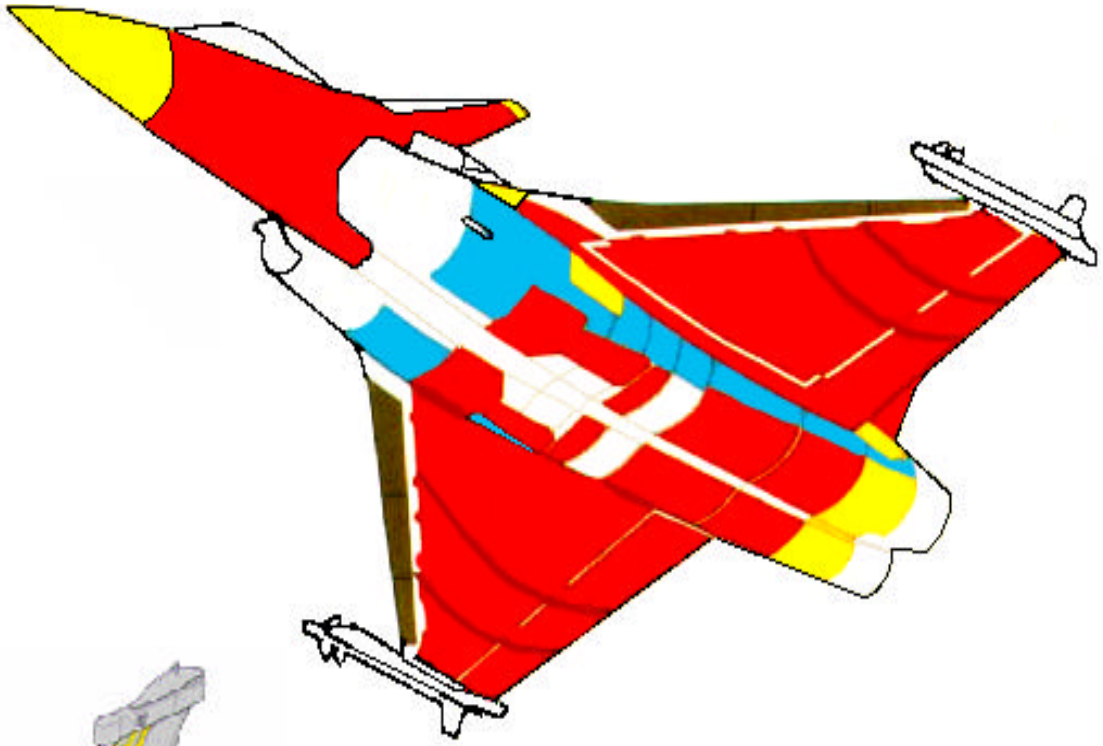

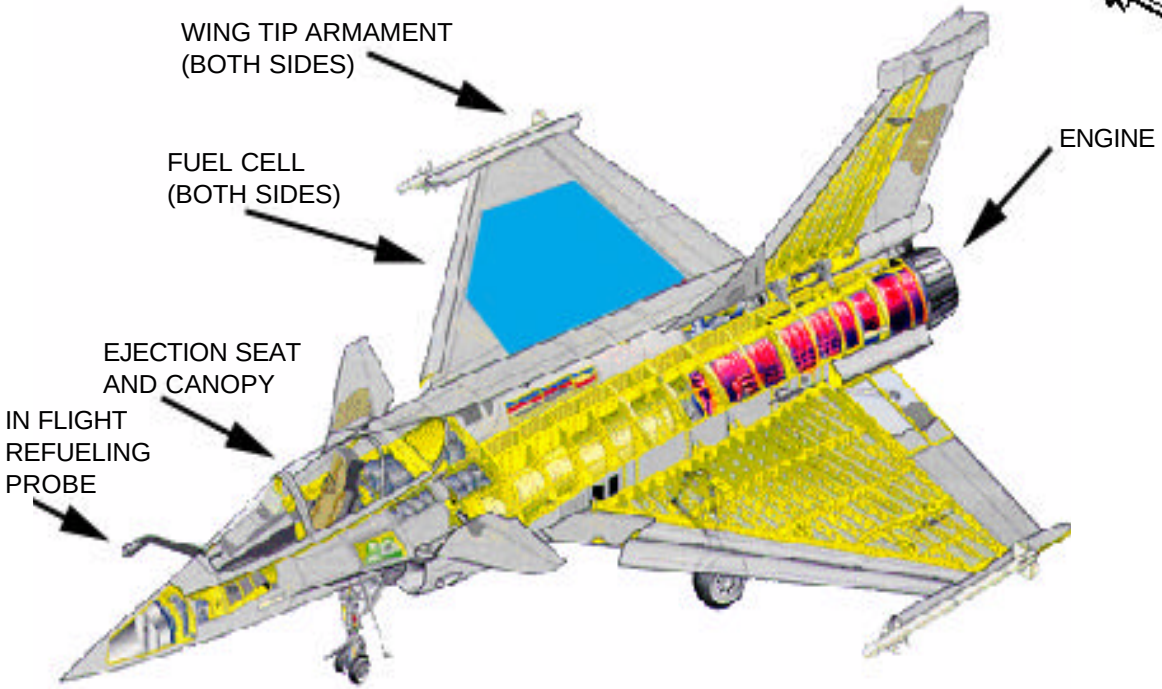

SPECIAL TOOLS/EQUIPMENT
Canopy Crank
Flat Screwdirver
Ladder
Gun Safety Pin

1. AIRCRAFT ENTRY - ELECTRICALLY

NOTE:
Engines are shut off for the four following modes.

a. Use the aircraft integrated stairs, a step ladder or the platform roof of a sufficiently high truck to gain access to the canopy control switch door, located on the left fuselage under the canopy forward left corner.

b. Open the canopy control switch door. Depress switch aft until the canopy opens. Canopy will remain open after the switch is released.

c. After canopy is opened, reclose the canopy control switch acess door.

2. AIRCRAFT ENTRY - MANUALLY

a. Obtain the mechanical crank for canopy opening and the endpiece adapters 11 and 17 in the gun compart ment, located under the RH wing apex.

b. Insert the crank with end piece adapter 17.

c. Open the two nose gear wheel well door latches with a flat screwdriver.

d. Open the nose gear wheel well door manually.

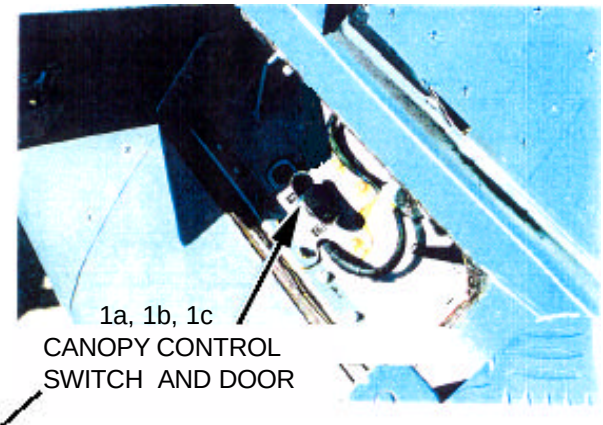

1a, 1b, 1c
CANOPY CONTROL SWITCH AND DOOR

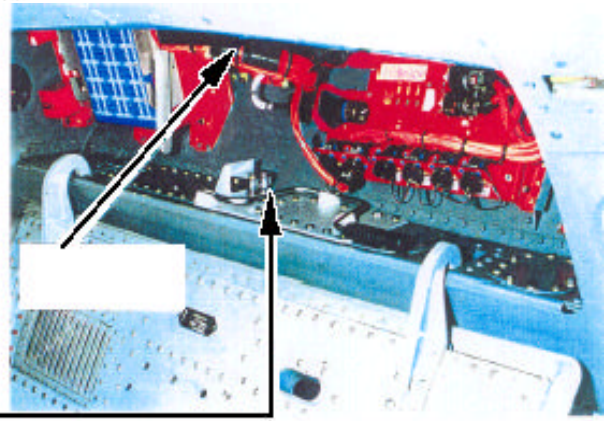

2a, 2b
CRANK AND ENDPIECE ADAPTERS IN GUN COMPARTMENT

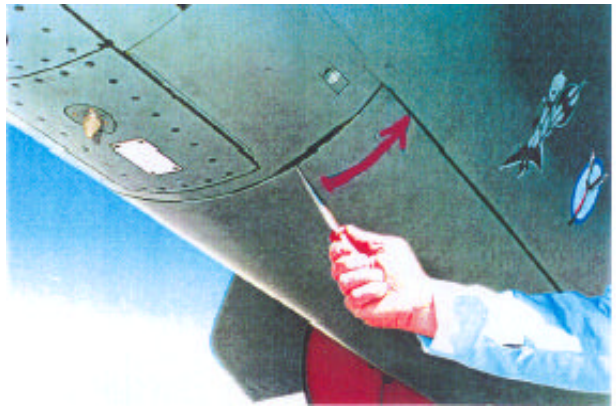

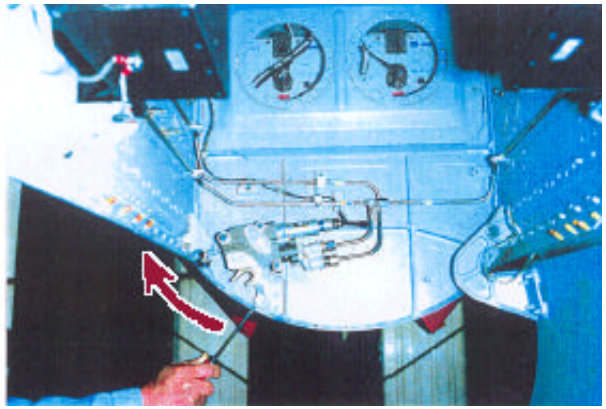

2c, 2d
NOSE GEAR WHEEL WELL DOORS AND WHEEL WELL

AIRCRAFT ENTRY - Continued

2. AIRCRAFT ENTRY - MANUALLY (Continued)

e. Unlock and tilt the chassis backwards, located in the ceiling of the nose gear well. Use the below sub-steps to accomplish tilting the chassis in graphic 2e:

(1) Remove the locking pin
(2) Rock the lever
(3) Rotate the lever by a quarter of a turn (clockwise)
(4) The chassis tilts backwards

f. Remove the yellow-black covered protection plate and by simultaneously applying pressure, turn the nut, located under the plate, clockwise (in the direction of the arrow) until reaching the mechanical stop. The canopy will move back.

g. Remove the endpiece adapter 17 from the crank.

h. Insert endpiece adapter 11by simultaneously applying pressure, turn the crank clockwise (in the direction of the arrow) driving the pick-up of the canopy control, located at the RH side of the fuselage, forward of the nose gear, 218 revolutions until reaching the mechanical stop. The canopy opens.

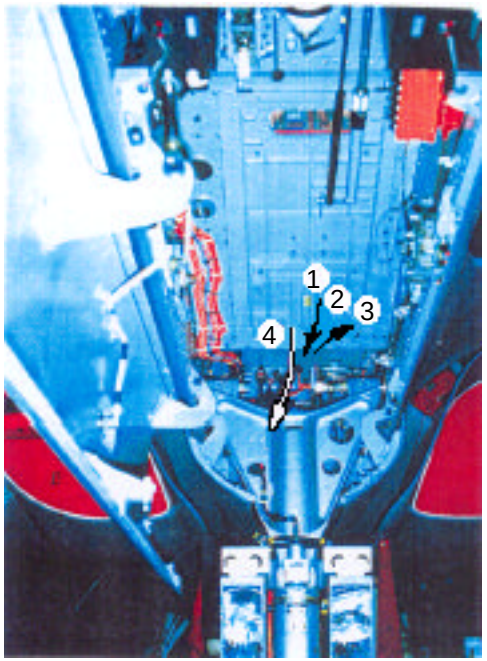

2e
NOSE LANDING GEAR CEILING

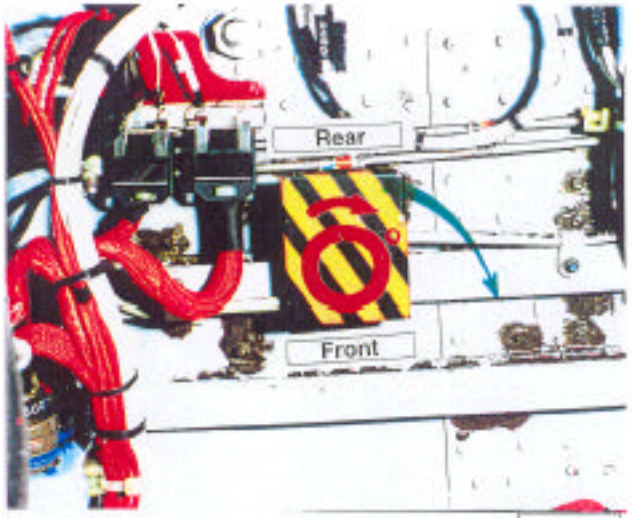

2f
YELLOW AND BLACK PROTECTION PLATE INSTALLED

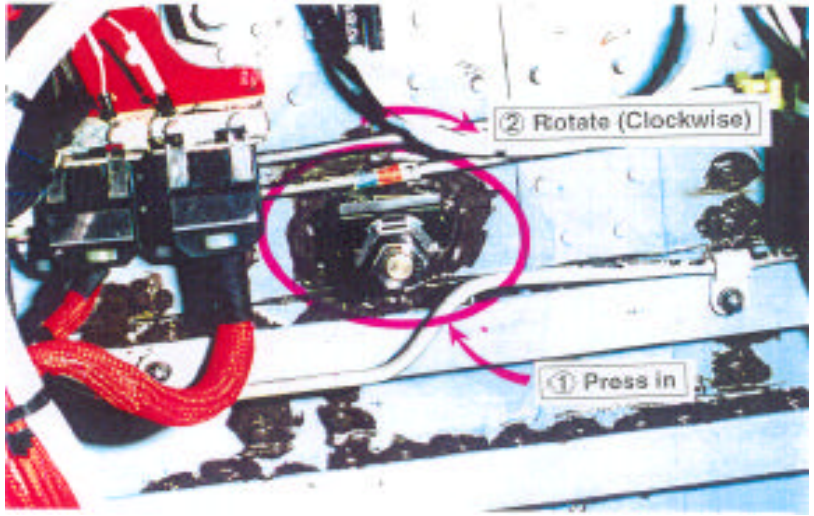

2g
ENDPIECE ADAPTER 17

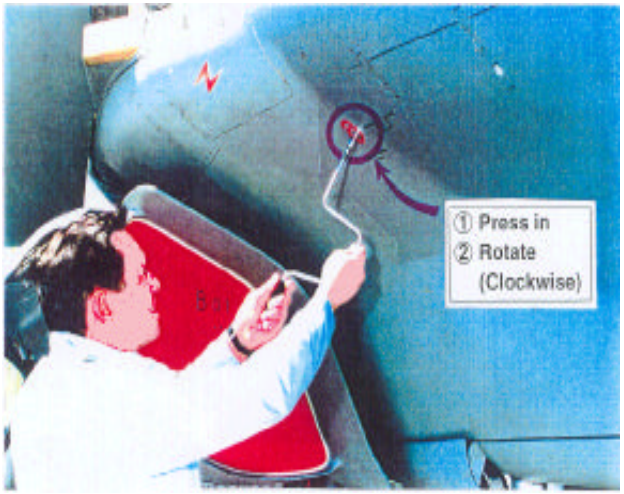

2h
END PIECE ADAPTER 11 INSTALLED IN CANOPY CONTROL

AIRCRAFT ENTRY - Continued

3. PYROTECHNICAL CANOPY FRAGILIZATION

a. Fracture either of the two fragilzation plexiglass covers on the RH or LH side of the fuselage.

WARNING

During canopy fragilization, to prevent eye damage through the projection of plexiglass particles, turn head towards the nose of the aircraft and protect face with arms.

b. Pull out one of the fragilization control handles, thereby cracking the central part of the canopy dome of both the front and rear cockpit canopies.

c. Remove and clear away the broken plexiglass parts and fragments, clearing way for safe entry.

4. CANOPY BREAKING

a. Should the above detailed operations remain ineffective, the canopy dome panels must be fractured.

b. Strike as near as possible to the central and rear canopy arches to avoid injuring the crewmember.

5. OPERATING ENGINES

WARNING

Keep off the engine air intakes at least 2 meters to prevent suction effect hazard. Death or injury can occur if personnel are injested into an operating engine.

a. Use a servicing step ladder, or an alternative platform with sufficient height to protect against the LH engine air intake suction effect, to have access to the front or rear cockpits.

b. To open the cockpit by pyrotechnical fragilization, climb on top a platform to have access to the fragilization control stowed under a yellow/black hatched bulls eye.

c. The same procedure can be used for the fragilization panel at the RH side.

3a, 3b
FRAGILIZATION PLEXIGLASS COVER (LH SHOWN) WITH ASSOCIATED PULL RING

4a
BREAKING CANOPY PANEL

4b
BREAKING CANOPY AT CENTRAL REAR

5a, 5b
FRAGILIZATION ACCESS PANEL (LH SHOWN)

ENGINE SHUTDOWN

1. ENGINE SHUTDOWN - FORWARD COCKPIT

a. Shutdown the engines by placing the mini-throttles, located on left side console, to the STOP position. This is accomplished by lifting the mini-throttles to the STOP notch. This action also closes the engine fuel starvation cocks.

b. Set the electrical power supply and start-up master switch, located just aft of the mini-throttles, to OFF by lifiting the switch and turning it clockwise. If this action is not taken, the RH engine will re-start.

2. ENGINE SHUTDOWN - REAR COCKPIT

a. If the forward cockpit is accessible, the engines can be shutdown by cutting off the fuel supply.

b. Close the left and right fuel starvation cocks by pulling out the LT and RT main cock switches on the mini-throttle position repeater panel.

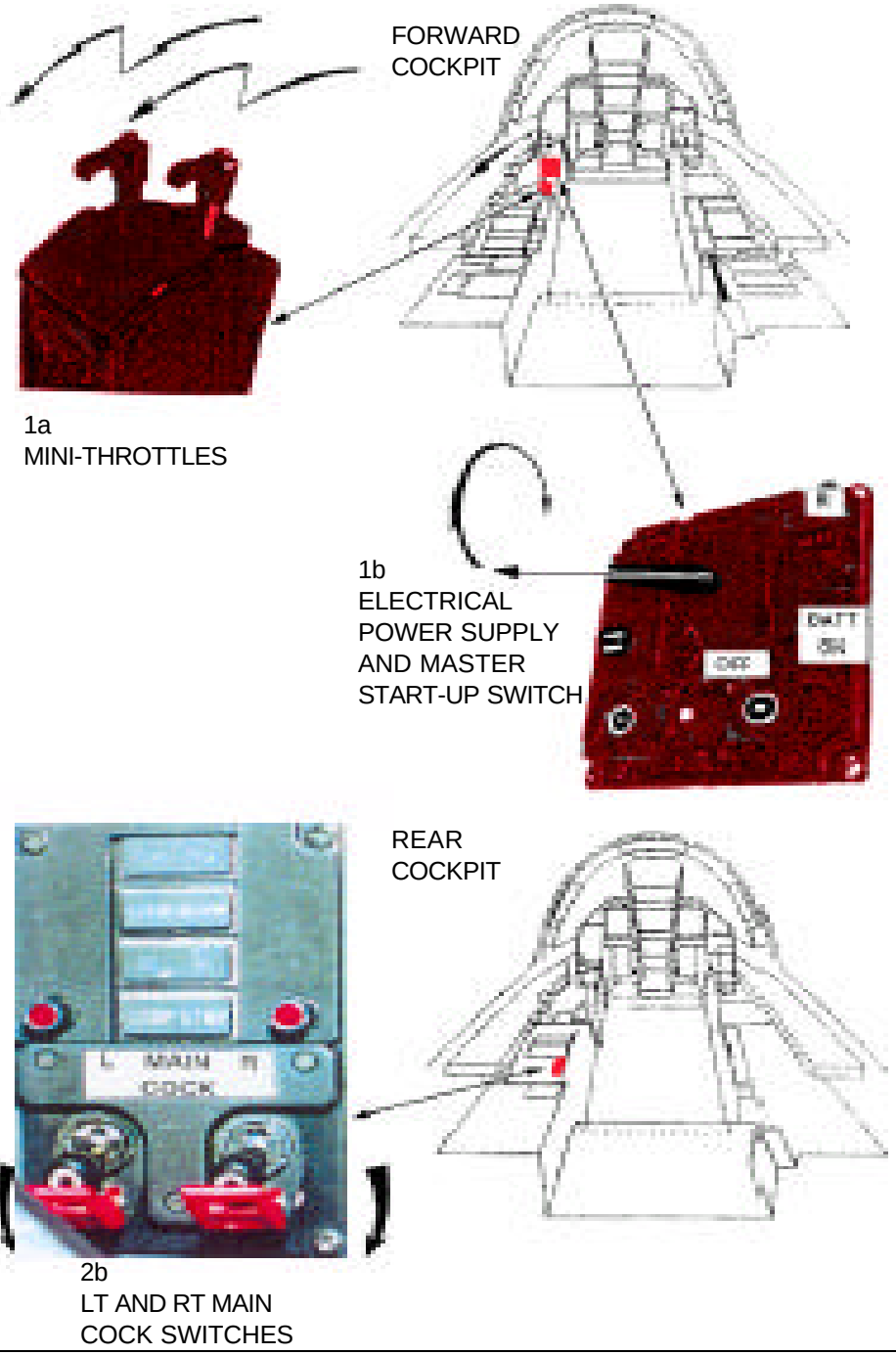

AIRCRAFT SYSTEMS SAFETYING

1. EJECTION SEATS SAFETYING

a. By simultaneously lifting RH lever, located at thigh level on the RH side of pilot's ejection seat pan, rock forward to switch from the "ARMED" to the "SAFE" position. (Do this by pressing the "S" of "SAFE" and lifting the "AFE" part, then the whole block until having completely locked it; the lateral fluorescent part must be visible).

2. CANOPY SAFETYING

WARNING

Beware of the emergency jettison control in both cockpits. Do not touch either switch. These are external stores jettison controls for aircrew actuation only. Actuation of emergency jettison controls can cause death of injury to personnel.

a. Turn off the "MASTER ARM" switch, located at the LH side of the front cockpit instrument panel, to the SAFE position.

b. Turn off the "MASTER ARM" switch, located at the LH side of the rear cockpit instrument panel, to the LCKD (locked) position.

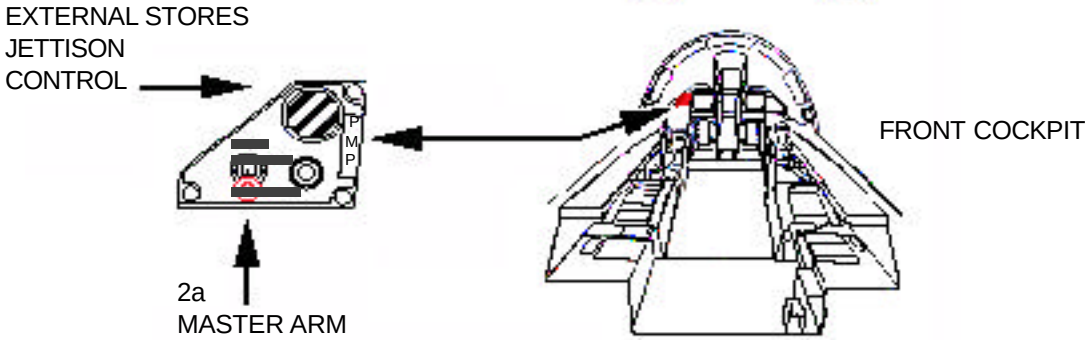

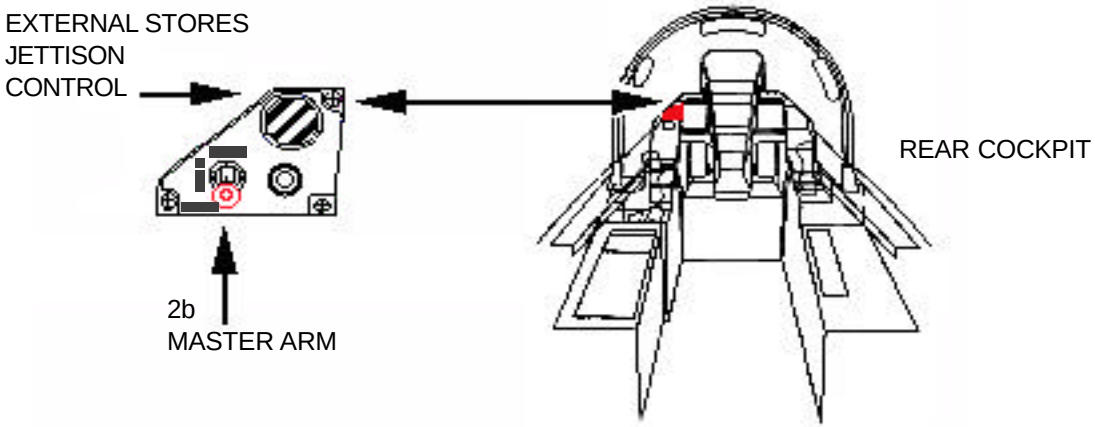

AIRCRAFT SYSTEMS SAFETYING - Continued

3. GUN SAFETYING

a. Lift the gun safety vane, located oa the LH side of the fuselage under the canard surface, up to the SAFE position.

AIRCREW EXTRACTION

1. AIRCREW EXTRACTION

a. Insure ejection seat is safe. See page Rafale 8.

b. Turn the central harness lock-unlock control buckle, located at crewmember's midsection, clockwise to unlock the harness and the arm restraint devices.

c. Set the "GREEN APPLE" oxygen control, located on LH side console, to the NORM (normal) position.

d. Pull the quick "EGRESS" control handle, located on the LH side of the ejection seat pan. This action disconnects:

(1) the oxygen junction plate

(2) the crewmember's survival pack at the opening connector

e. Extract crewmember while avoiding any entanglement of restraints and connectors.

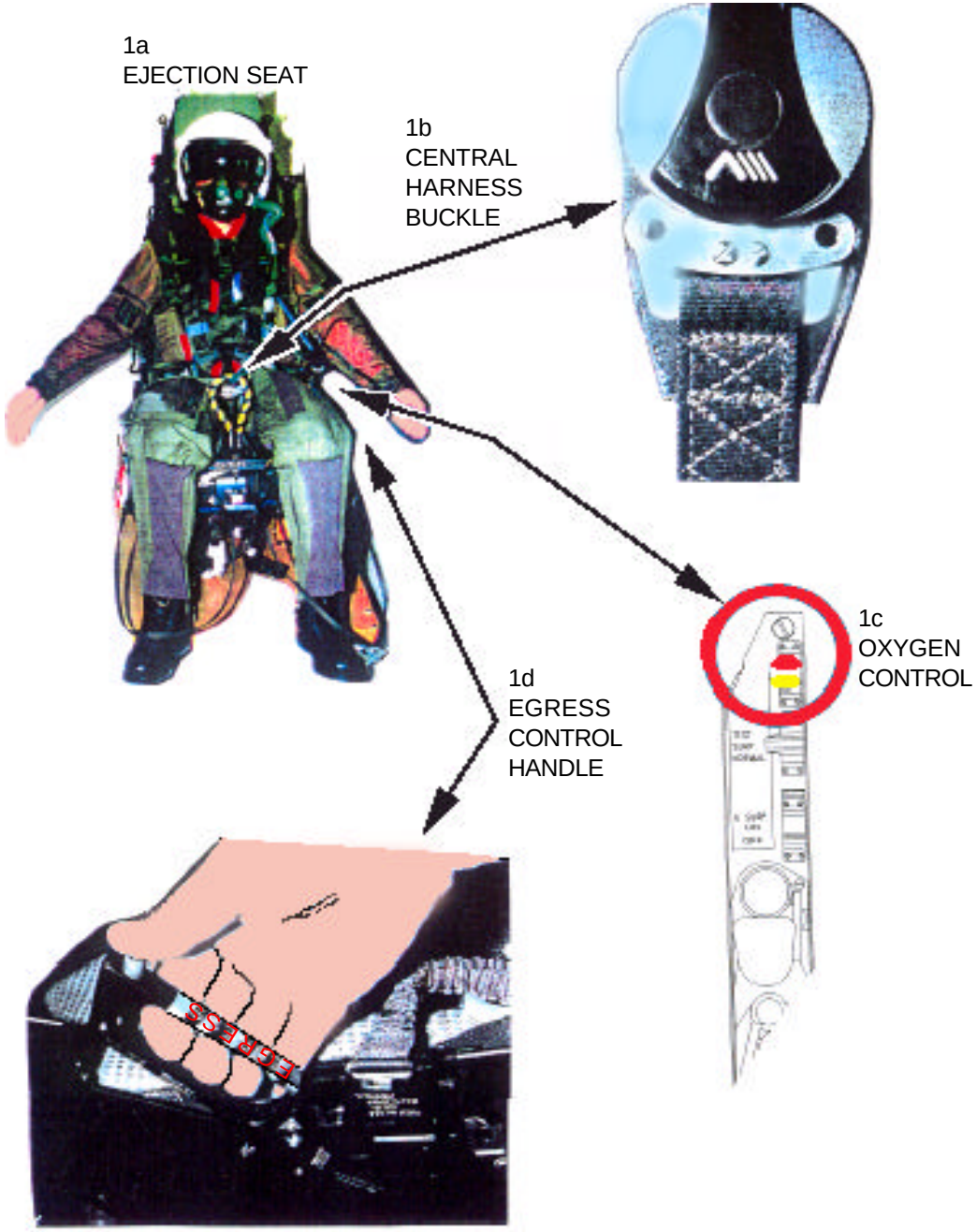

AIRCRAFT RECOVERY

1. IN CASE OF INVERTED AIRCRAFT

a. Attach a steel cable, minimum strength of 9 tons around the nose gear fitting.

b. Lift the fore part of the aircraft by means of a crane with a minimum static load capacity of 9 tons.

c. If no cable is available and if the nose-gear is retracted or broken, use the hoisting strap provided to this effect. It is possible to slide it between the fuselage and the ground, either forward of the windshield or behind the canard surfaces.

NOTE:
In the latter case, the crane beam hook load may reach 11 tons (static load) to lift the aircraft.

1a, 1b
HOISTING OF AN INVERTED AIRCRAFT

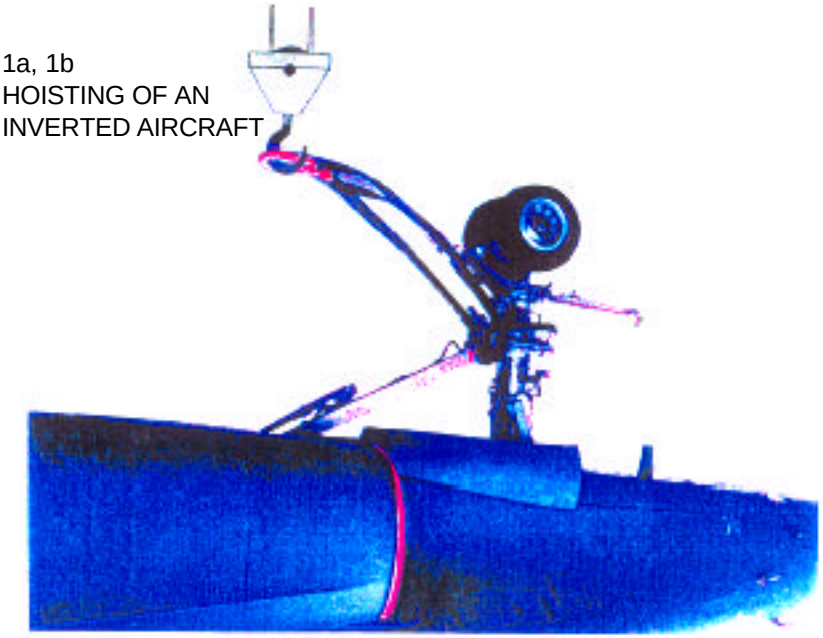

1c
HOISTING OF AN INVERTED AIRCRAFT USING A HOISTING STRAP

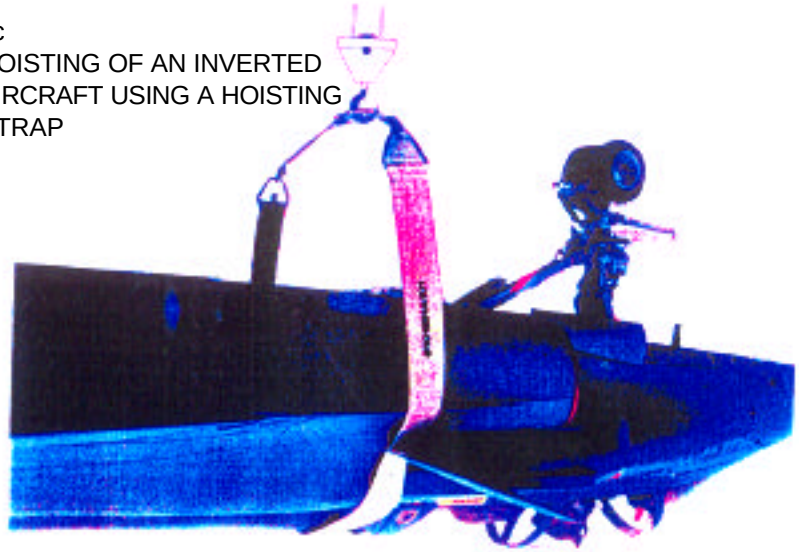

SUPER ETENDARD

SPECIAL TOOLS/EQUIPMENT
Pyrotechnic Fuse Wrench
Power Rescue Saw
Crash Ax

AIRCRAFT ENTRY

1. Unlock canopy by turning handle, located on left side of fuselage, clockwise.

b. Electrically open the canopy by turning handle counterclockwise.

2. MANUAL ENTRY

a. Unlock canopy by turning handle clockwise.

b. Unlock ball lock cylinder by turning handle counterclockwise.

c. Unplug pyrotechnic fuses.

3. EMERGENCY ENTRY

a. Break emergency canopy glass panel on right or left sides of fuselage behind canopy for access to canopy fracturing lanyard.

b. Pull canopy fracturing lanyard out to full length.

c. Pull lanyard handle sharply to actuate canopy fracturing system.

4. CUT-IN

a. If canopy fracturing system is inoperative, cut-in canopy along canopy frame on all four sides.

FUEL CAPACITY: 1263 GALS (4780 LITRES)

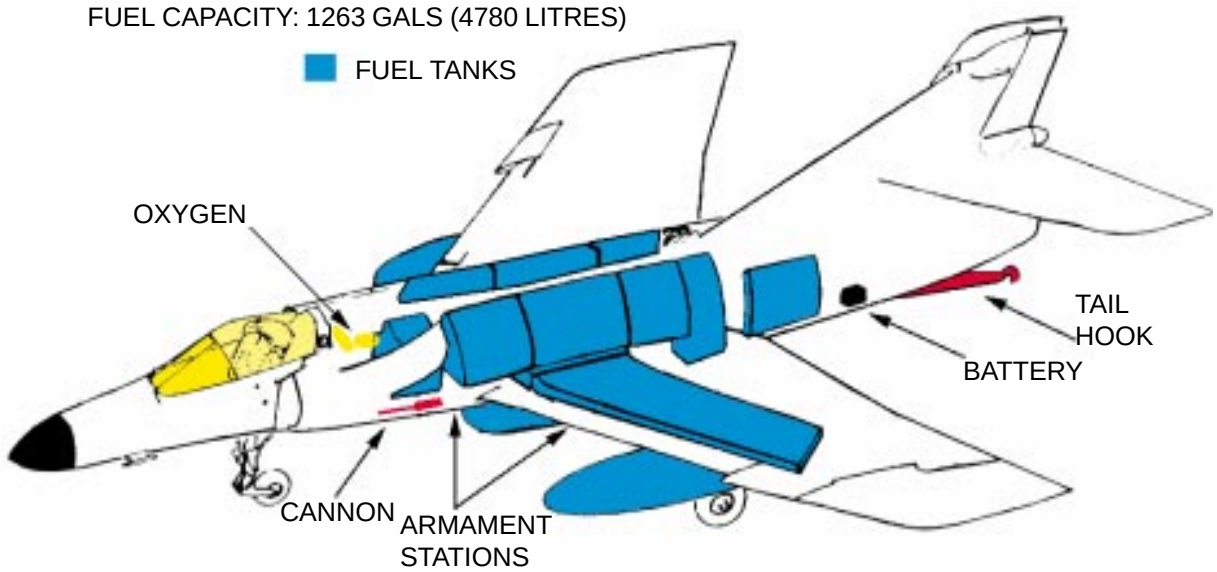

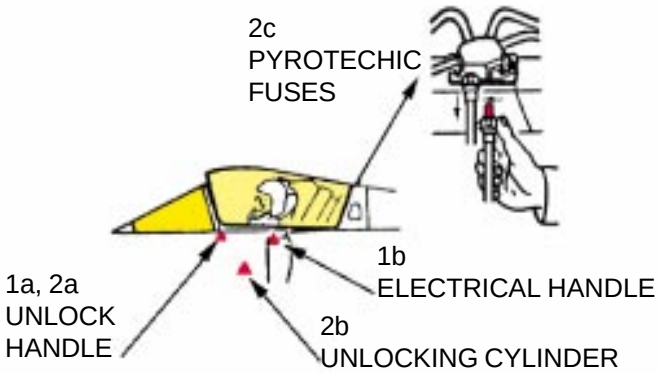

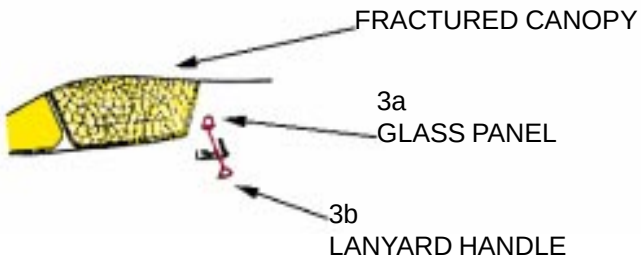

ENGINE SHUTDOWN

SUPER ETENDARD

1. ENGINE SHUTDOWN

a. Retard throttle, located on left console, aft to OFF position.

b. Close shut-off valve located on left console.

c. Place battery, generator and alternator switches, located front right and above console, down to cut off power.

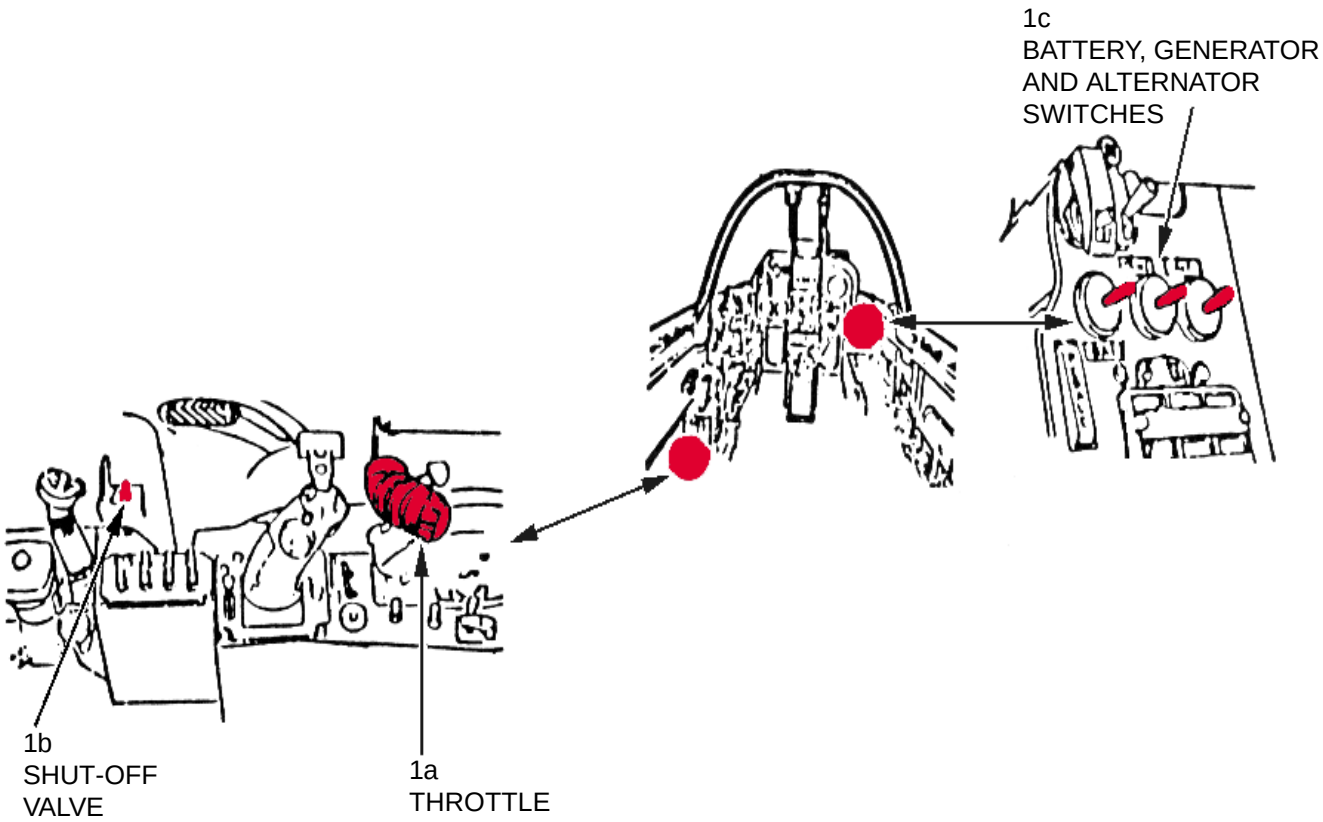

SEAT SAFETYING AND AIRCREW EXTRACTION

1. SEAT SAFETYING

a. Install safety pin in sear, located on top aft of seat, of primary firing mechanism.

b. Install safety pin in drogue gun located on top left side of seat, firing mechanism.

2. AIRCREW EXTRACTION

a. Disconnect face mask from crewmember.

b. Turn off oxygen shut-off cock, located on right side console.

c. Turn off emergency valve on regulator, located on left side console.

d. Disconnect lap belt and shoulder harness restraints, by actuating center release.

e. Lift up release handle, located lower left side of ejection seat to release crewmember's leg restraint lanyards.

f. Disconnect any remaining restraints on crewmember prior to cockpit extraction as required.

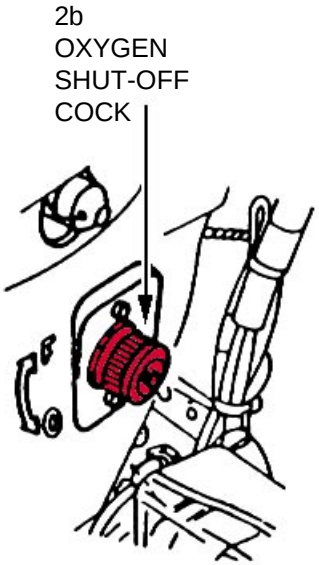

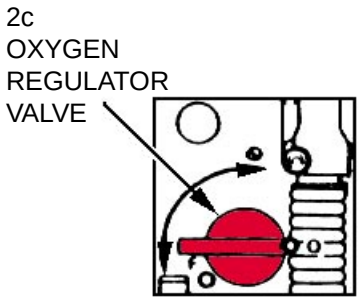

The aircraft information is located in Chapter 22
containing US Navy aircraft.