AIR FORCE TO 32-1-101
ARMY TM 9-243
NAVY M6290-AJ-MAN-1010
MARINE CORP TM 10209-10/1

TECHNICAL MANUAL

USE AND CARE OF HAND TOOLS AND MEASURING TOOLS

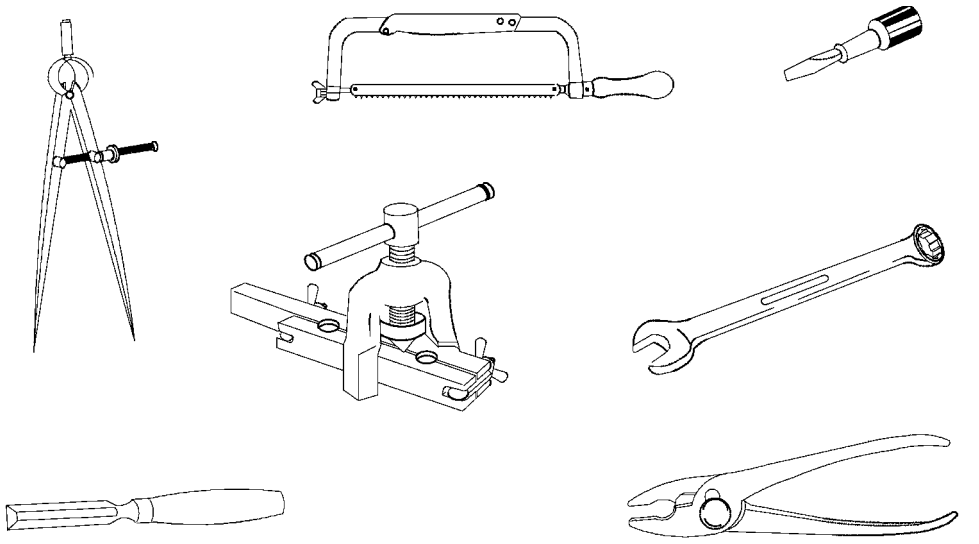

HTMT-001

BASIC AND ALL CHANGES HAVE BEEN MERGED TO MAKE THIS A COMPLETE PUBLICATION.

DISTRIBUTION STATEMENT A - Approved for public release; distribution is unlimited. PA Case Number 05-07153. Submit recommended changes or problems with this Technical Order to 406 SCMS/GUEE, Robins AFB, GA 31098. Questions concerning technical content shall be referred to 404 SCMS/GUEE.

Published Under Authority of the Secretaries of the Air Force, Army, Navy, and The Commandant, Marine Corps.

1 DECEMBER 2004 **CHANGE 11 - 26 APRIL 2017**

LIST OF EFFECTIVE PAGES

INSERT LATEST CHANGED PAGES. DESTROY SUPERSEDED PAGES.

NOTE: The portion of the text affected by the changes is indicated by a vertical line in the outer margins of the page. Changes to illustrations are indicated by shaded or screened areas, or by miniature pointing hands.

Dates of issue for original and changed pages are:

Original	0	1 December 2004	Change	6	6 October 2010
Change	1	31 August 2006	Change	7	31 July 2012
Change	2	14 September 2007	Change	8	28 June 2014
Change	3	20 August 2009	Change	9	19 September 2014
Change	4	15 March 2010	Change	10	12 November 2016
Change	5	9 August 2010	Change	11	26 April 2017

TOTAL NUMBER OF PAGES IN THIS PUBLICATION IS 310, CONSISTING OF THE FOLLOWING:

Page No.	*Change No.
Title	11
A	11
i	0
ii	4
iii	0
iv	10
v	0
vi	6
vii - xi	0
xii Blank	0
1-1	11
1-2 Blank	0
2-1	0
2-2	4
2-3 - 2-4	0
3-1 - 3-3	0
3-4 Blank	0
4-1 - 4-2	0
5-1 - 5-2	0
6-1 - 6-3	0
6-4	10
7-1 - 7-3	0
7-4	10
8-1 - 8-3	0
8-4 Blank	0
9-1	4
9-2	10
10-1 - 10-3	0
10-4 Blank	0
11-1 - 11-4	0
11-5	10
11-6 Blank	0
12-1	0
12-2	10
13-1 - 13-5	0
13-6	10
14-1 - 14-3	0
14-4	10
15-1 - 15-8	0
16-1 - 16-6	0
16-7	10
16-8 Blank	0
17-1 - 17-4	0
17-5 - 17-6	10
18-1 - 18-4	0
19-1 - 19-3	0
19-4 Blank	0
20-1 - 20-6	0
21-1 - 21-2	7
21-3 - 21-7	0
21-8	5
21-9 - 21-15	0
21-16 Blank	0
22-1 - 22-6	0
23-1 - 23-3	0
23-4 Blank	0
24-1 - 24-2	0
25-1 - 25-8	0
25-9	9
25-10 - 25-12	0
25-13	1
25-14 - 25-15	0
25-16 Blank	0
26-1 - 26-5	0
26-6 Blank	0
27-1 - 27-2	0
27-3 - 27-6	6
28-1 - 28-5	0
28-6 Blank	0
29-1 - 29-6	0
30-1 - 30-2	0
31-1	0
31-2	3
32-1 - 32-3	0
32-4 Blank	0
33-1 - 33-3	0
33-4 Blank	0
34-1 - 34-3	0
34-4 Blank	0
35-1 - 35-6	0
36-1 - 36-3	0
36-4 Blank	0
37-1 - 37-3	0
37-4 Blank	0
38-1 - 38-6	0
39-1 - 39-3	0
39-4 Blank	0
40-1 - 40-3	0
40-4 Blank	0
41-1 - 41-4	0
42-1 - 42-2	0
43-1 - 43-2	0
44-1 - 44-2	0
45-1 - 45-6	0
46-1 - 46-5	0
46-6	4
46-7 - 46-8 Deleted	2
47-1 - 47-2	0
48-1 - 48-2	0
49-1 - 49-4	0
50-1 - 50-3	0
50-4 Blank	0
51-1 - 51-4	0
52-1 - 52-17	0
52-18 Blank	0
53-1 - 53-6	0
54-1 - 54-2	0
55-1 - 55-20	0
56-1 - 56-2	0
A-1	0
A-2 Blank	0
Index 1 - Index 10	0

*Zero in this column indicates an original page.

TABLE OF CONTENTS

Chapter		Page
1	INTRODUCTION	1-1
1.1	PURPOSE	1-1
1.2	HOW TO USE THIS MANUAL	1-1
2	SAFETY	2-1
	SECTION I SAFETY RULES (GENERAL)	2-1
2.1	SAFETY AND SAFETY EQUIPMENT	2-1
2.2	TOOL HABITS	2-1
2.2.1	Keep Each Tool in its Proper Storage Place	2-2
2.2.2	Keep Your Tools in Good Condition	2-2
2.2.3	Keep Your Tool Set Complete	2-2
2.2.4	Use Each Tool Only on the Job for Which it was Designed	2-2
2.2.5	Keep Your Tools Within Easy Reach and Where They Cannot Fall on the Floor or on Machinery	2-2
2.2.6	Never Use Damaged Tools	2-2
	SECTION II SAFETY RULES (POWER TOOLS)	2-3
	SECTION III SAFETY EQUIPMENT	2-3
2.3	SAFETY SHOES	2-3
2.4	EYE PROTECTION	2-3
2.5	HELMETS	2-4
2.6	GLOVES	2-4
2.7	SAFETY BELTS AND SAFETY STRAPS	2-4
2.8	EAR PROTECTION	2-4
3	READING MEASURING SCALES	3-1
3.1	INTRODUCTION	3-1
3.2	READING THE SCALE OF A RULE OR TAPE	3-1
3.3	READING A METRIC RULE	3-2
4	TOOL BOXES	4-1
4.1	HOW TO CHOOSE AND USE THEM	4-1
4.2	TYPES AND USES	4-1
5	DIVIDERS	5-1
5.1	HOW TO CHOOSE AND USE THEM	5-1
5.2	TYPES AND USES	5-1
5.2.1	Spring Divider	5-1
5.2.2	Wing Divider	5-1
5.3	USING A DIVIDER TO SCRIBE A CIRCLE	5-2
5.4	CARE OF DIVIDERS	5-2
6	CALIPERS	6-1
6.1	HOW TO CHOOSE AND USE THEM	6-1
6.2	TYPES AND USES	6-1
6.2.1	Simple Calipers	6-1
6.2.2	Spring-Joint Calipers	6-1
6.2.3	Transfer Calipers	6-2
6.2.4	Hermaphrodite Calipers	6-2
6.2.5	Slide Calipers	6-2
6.2.6	Vernier Calipers	6-3
6.2.7	Trammels	6-3
6.3	READING A VERNIER CALIPER	6-3
6.4	READING A METRIC CALIPER	6-4
6.5	CARE OF CALIPERS	6-4
7	MICROMETERS	7-1
7.1	HOW TO CHOOSE AND USE THEM	7-1
7.2	TYPES AND USES	7-1
7.2.1	Outside Micrometers	7-1
7.2.2	Inside Micrometers	7-1
7.2.3	Depth Micrometers	7-1
7.3	SELECTING THE PROPER MICROMETER	7-1
7.4	READING A STANDARD MICROMETER	7-2
7.4.1	To Read a Measurement as Shown Above:	7-3
7.5	READING A VERNIER MICROMETER	7-3
7.5.1	To Read a Measurement as Shown Above:	7-3
7.6	READING A METRIC MICROMETER	7-4

TABLE OF CONTENTS - Continued

Chapter		Page
7.6.1	To Read a Measurement as Shown Above:	7-4
7.7	CARE OF MICROMETERS	7-4
8	RULES AND STEEL TAPES	8-1
8.1	HOW TO CHOOSE AND USE THEM	8-1
8.2	TYPES AND USES	8-1
8.2.1	Rules	8-1
8.2.2	Folding Rules	8-2
8.2.3	Steel Tapes	8-2
8.3	USING RULERS AND TAPES EXAMPLES	8-3
8.4	CARE OF RULES AND TAPES	8-3
9	MISCELLANEOUS MEASURING TOOLS	9-1
9.1	HOW TO CHOOSE AND USE THEM	9-1
9.2	TYPES AND USES	9-1
9.2.1	Adjustable Parallel	9-1
9.2.2	V-Block and Clamp	9-1
9.2.3	Angle Plates	9-1
9.2.4	Magnetic Base Indicator Holder	9-2
9.2.5	Registering Speed Indicators	9-2
9.3	USING MISCELLANEOUS MEASURING TOOLS	9-2
9.4	CARE OF MISCELLANEOUS MEASURING TOOLS	9-2
10	LEVELS	10-1
10.1	HOW TO CHOOSE AND USE THEM	10-1
10.2	TYPES AND USES	10-1
10.2.1	Master Precision Level	10-1
10.2.2	Machinist’s Level	10-1
10.2.3	Iron Bench Level	10-1
10.2.4	Striding Level	10-1
10.2.5	Carpenter’s Level	10-2
10.2.6	Line Level	10-2
10.3	USING A LEVEL	10-2
10.3.1	Horizontal Surface	10-2
10.3.2	Angled Surface	10-2
10.3.3	Vertical Surface	10-3
11	PLUMB BOBS	11-1
11.1	HOW TO CHOOSE AND USE THEM	11-1
11.2	TYPES AND USES	11-1
11.2.1	Plumb Bobs	11-1
11.2.2	Surveyor’s Polished Brass	11-1
11.2.3	Solid Steel	11-1
11.3	USING A PLUMB BOB	11-2
11.4	CARE OF PLUMB BOBS	11-5
12	SCRIBERS	12-1
12.1	HOW TO CHOOSE AND USE THEM	12-1
12.2	TYPES AND USES	12-1
12.2.1	Machinist’s Scribers	12-1
12.3	USING A MACHINIST’S SCRIBER	12-1
12.4	CARE OF SCRIBERS	12-2
13	SQUARES	13-1
13.1	HOW TO CHOOSE AND USE THEM	13-1
13.2	TYPES AND USES	13-1
13.2.1	Carpenter’s Square	13-1
13.2.2	Try Square	13-2
13.2.3	Combination Square	13-2
13.2.4	Sliding T-Bevel	13-3
13.2.5	Bevel Protractor	13-3
13.3	USING A CARPENTER'S SQUARE TO MARK A SQUARE LINE	13-3
13.4	USING A CARPENTER’S SQUARE TO LAY OUT STEPS	13-3
13.5	USING A TRY SQUARE	13-4
13.6	USING A SLIDING T-BEVEL SQUARE	13-4
13.7	USING A COMBINATION SQUARE	13-5
13.7.1	Using as a Center Head to Find the Diameter of a Cylinder:	13-5
13.7.2	Using as a Protractor Head to Determine an Angle	13-5
13.7.3	Using a Combination Square to Determine Depth	13-6
13.8	CARE OF SQUARES	13-6

TABLE OF CONTENTS - Continued

Chapter		Page
14	SURFACE, DEPTH, AND HEIGHT GAGES	14-1
14.1	HOW TO CHOOSE AND USE THEM	14-1
14.2	TYPES AND USES	14-1
14.2.1	Surface Gage	14-1
14.2.2	Rule Depth Gage	14-1
14.2.3	Micrometer Depth Gage	14-2
14.2.4	Vernier Depth Gage	14-2
14.2.5	Height Gage	14-2
14.2.6	Surface Plate	14-3
14.3	USING THE SURFACE, DEPTH, AND HEIGHT GAGES	14-3
14.3.1	Using a Surface Gage	14-3
14.3.2	Using a Rule Depth Gage	14-3
14.3.3	Using a Micrometer Depth Gage	14-3
14.3.4	Using a Vernier Depth Gage	14-3
14.3.5	Using a Height Gage	14-3
14.4	CARE OF SURFACE, HEIGHT, AND DEPTH GAGES	14-4
15	RING AND SNAP GAGES AND GAGE BLOCKS	15-1
15.1	HOW TO CHOOSE AND USE THEM	15-1
15.2	TYPES AND USES	15-1
15.2.1	Ring Gages	15-2
15.2.2	Snap Gages	15-2
15.2.3	Gage Blocks	15-3
15.3	USING A RING GAGE	15-3
15.4	USING AN ADJUSTABLE SNAP GAGE	15-4
15.5	GAGING FLAT PARTS	15-5
15.6	GAGING CYLINDRICAL PARTS	15-5
15.7	HOW TO USE PRECISION GAGE BLOCKS	15-6
15.8	FACTORS TO CONSIDER WHEN USING GAGE BLOCKS	15-7
15.9	CARE OF RING AND SNAP GAGES	15-7
15.10	CARE OF GAGE BLOCKS	15-8
16	MISCELLANEOUS MEASURING GAGES	16-1
16.1	HOW TO CHOOSE AND USE THEM	16-1
16.2	TYPES AND USES	16-1
16.2.1	Thickness (Feeler) Gages	16-1
16.2.2	Center Gage	16-2
16.2.3	Screw Pitch Gages	16-2
16.2.4	Small Hole Gage Set	16-3
16.2.5	Telescoping Gages	16-3
16.2.6	Threaded Cutting Tool Gages	16-3
16.2.7	Fillet and Radius Gages	16-3
16.2.8	Drill Point Gage	16-4
16.2.9	Wire Gages	16-4
16.2.10	Drill Gages	16-4
16.2.11	Marking Gages	16-4
16.3	USING A THICKNESS GAGE	16-5
16.4	USING A CENTER GAGE	16-5
16.5	USING A SCREW PITCH GAGE	16-5
16.6	USING A SMALL HOLE GAGE	16-5
16.7	USING A TELESCOPING GAGE	16-5
16.8	USING A THREAD CUTTING TOOL GAGE	16-6
16.9	USING A FILLET AND RADIUS GAGE	16-6
16.10	USING A DRILL POINT GAGE	16-6
16.11	USING A WIRE GAGE	16-7
16.12	USING A DRILL GAGE	16-7
16.13	USING MARKING GAGES	16-7
16.14	CARE OF GAGES	16-7
17	PLIERS AND TONGS	17-1
17.1	HOW TO CHOOSE AND USE THEM	17-1
17.2	TYPES AND USES	17-1
17.2.1	Slip-joint Pliers	17-1
17.2.2	Diagonal Cutting Pliers	17-1
17.2.3	Lineman’s Side Cutting Pliers	17-1
17.2.4	Parallel Jaw Pliers	17-2
17.2.5	Flat-nose Pliers	17-2
17.2.6	Round-nose Pliers	17-2
17.2.7	Straight-lip Flat-jaw Tongs	17-2
17.2.8	End Cutting Pliers	17-2
17.2.9	Wire Strippers (Multipurpose)	17-2

TABLE OF CONTENTS - Continued

Chapter		Page
17.2.10	Crimping Tools	17-2
17.2.11	Wire Twister	17-3
17.3	USING SLIP-JOINT PLIERS	17-3
17.4	USING DIAGONAL CUTTING PLIERS	17-4
17.5	USING LINEMAN'S SIDE CUTTING PLIERS	17-5
17.6	CARE OF PLIERS AND TONGS	17-6
18	VISES	18-1
18.1	HOW TO CHOOSE AND USE THEM	18-1
18.2	TYPES AND USES	18-1
18.2.1	Machinist's Bench Vise	18-1
18.2.2	Bench and Pipe Vise	18-1
18.2.3	Clamp Base Bench Vise	18-1
18.2.4	Pipe Vise	18-2
18.2.5	Machine Table Vise	18-2
18.2.6	Pin Vise	18-2
18.2.7	Piston Holding Vise	18-2
18.2.8	Handsaw Filing Vise	18-2
18.3	USING A MACHINIST'S BENCH VISE	18-3
18.4	USING A PIPE VISE	18-4
18.5	CARE OF VISES	18-4
19	CLAMPS	19-1
19.1	HOW TO CHOOSE AND USE THEM	19-1
19.2	TYPES AND USES	19-1
19.2.1	C-Clamps	19-1
19.2.2	Hand Screw Clamps	19-1
19.3	USING A C-CLAMP	19-1
19.4	USING A HAND SCREW CLAMP	19-2
19.5	CARE OF C-CLAMPS	19-2
19.6	CARE OF HAND SCREW CLAMPS	19-3
20	JACKS	20-1
20.1	HOW TO CHOOSE AND USE THEM	20-1
20.2	TYPES AND USES	20-1
20.2.1	Screw Jacks	20-1
20.2.2	Ratchet Lever Jacks	20-1
20.2.3	Hydraulic Jacks	20-2
20.3	SAFETY	20-3
20.4	USING A BELL BASE SCREW JACK	20-4
20.5	USING A RATCHET LEVER JACK	20-5
20.6	CARE OF JACKS	20-6
21	HAMMERS, MALLETS AND MAULS	21-1
21.1	HOW TO CHOOSE AND USE THEM	21-1
21.2	Types and Uses	21-1
21.2.1	Carpenter's Hammer	21-1
21.2.2	Machinist's Peen Hammer	21-2
21.2.3	Bumping Body Hammer	21-2
21.2.4	Blacksmith's or Sledge Hammers	21-3
21.2.5	Jeweler's Hammer	21-3
21.2.6	Mason's Hammer	21-3
21.2.7	Napping Hammer	21-4
21.2.8	Riveting Hammer	21-4
21.2.9	Sawmaker's Hammer	21-4
21.2.10	Setting Hammer	21-4
21.2.11	Soft-Faced Hammer	21-4
21.2.12	Lead or Copper Hammer	21-4
21.2.13	Inserted Soft-Faced Hammer	21-5
21.2.14	Trimmer's Hammer	21-6
21.2.15	Welder's Hammer	21-6
21.2.16	Dead Blow Hammers	21-6
21.2.17	Mallets	21-6
21.2.17.1	Carpenter's Mallet	21-6
21.2.17.2	Rawhide Mallet	21-7
21.2.17.3	Rubber Mallet	21-7
21.2.17.4	Tinner's Mallet	21-7
21.2.18	Mauls	21-7
21.2.18.1	Railroad Track Maul	21-7
21.2.18.2	Wooden Maul	21-7
21.3	SAFETY	21-7
21.3.1	Specific Steps to Take	21-8
21.4	USING HAMMERS	21-8
21.4.1	Using a Carpenter's Hammer	21-9
21.4.2	Using a Mechinist's Ball Peen Hammer	21-11
21.5	CARE OF HAMMERS	21-11

TABLE OF CONTENTS - Continued

Chapter		Page
21.5.1	Care of Inserted Face Hammers	21-12
21.6	REPLACING THE HANDLE	21-12
21.6.1	Removing Old Hammer Handle	21-13
21.6.2	Installation of New Handle	21-13
22	SCREWDRIVERS	22-1
22.1	HOW TO CHOOSE AND USE THEM	22-1
22.2	TYPES AND USES	22-1
22.2.1	Common Screwdrivers	22-1
22.2.2	Cross-Tip Screwdrivers	22-2
22.2.3	Cross-Point Screwdrivers	22-2
22.2.4	Clutch Head Screwdrivers	22-2
22.2.5	Offset Screwdrivers	22-2
22.2.6	Ratchet Screwdrivers	22-3
22.2.7	Screwdriver Bits	22-3
22.2.8	Jeweler's Screwdriver	22-3
22.2.9	Flexible Screwdrivers	22-3
22.2.10	Radio and Pocket Screwdrivers	22-3
22.2.11	Screw Starter or Gimlet	22-4
22.3	SAFETY	22-4
22.4	USING SCREWDRIVERS	22-4
22.4.1	Preparing the Work Surface	22-4
22.4.2	Using a Screwdriver	22-4
22.4.3	Using an Offset Screwdriver	22-5
22.4.4	Using an Offset Ratchet Screwdriver	22-5
22.4.5	Using a Spiral Ratchet Screwdriver	22-5
22.4.6	Using a Jeweler's Screwdriver	22-6
22.5	CARE OF SCREWDRIVERS	22-6
23	MANUAL DRILLS	23-1
23.1	HOW TO CHOOSE AND USE THEM	23-1
23.2	TYPE AND USES	23-1
23.2.1	Brace Drill	23-1
23.2.2	Breast Drill	23-1
23.2.3	Hand Drill	23-2
23.3	USING A BRACE DRILL	23-2
23.4	USING AN EXPANSIVE BIT	23-3
23.5	CARE OF MANUAL DRILLS	23-3
24	SCREW AND TAP EXTRACTORS	24-1
24.1	HOW TO CHOOSE AND USE THEM	24-1
24.2	TYPES AND USES	24-1
24.2.1	Screw Extractors	24-1
24.2.2	Tap Extractor	24-1
24.3	USING A SPIRAL TAPERED SCREW EXTRACTOR	24-2
24.4	CARE OF EXTRACTORS	24-2
25	WRENCHES	25-1
25.1	HOW TO CHOOSE AND USE THEM	25-1
25.2	TYPES AND USES	25-1
25.2.1	Open-End Wrenches	25-1
25.2.2	Box Wrenches	25-2
25.2.3	Combination Wrenches	25-3
25.2.4	Socket Wrenches	25-4
25.2.5	Socket Wrench Handles, Extensions and Adapters	25-4
25.2.6	Special Purpose Socket Wrenches	25-6
25.2.7	Crowfoot Wrench	25-7
25.2.8	Hex Key Wrench (Shorter Section)	25-7
25.2.9	Plug Wrenches	25-7
25.2.10	Adjustable Open-End Wrench	25-7
25.2.11	Clamp Pliers	25-8
25.2.12	Monkey and Auto Wrenches	25-8
25.2.13	Pipe Wrenches	25-8
25.2.14	Torque Wrenches	25-9
25.2.15	Power Torque Wrench	25-9
25.2.16	Spanner Wrenches	25-10
25.3	SAFETY	25-10
25.4	HOW TO USE A BOX WRENCH	25-11
25.5	USING A SOCKET WRENCH	25-11
25.6	USING AN ADJUSTABLE OPEN-END WRENCH	25-12
25.7	USING AN ADJUSTABLE STRAP PIPE WRENCH	25-12
25.8	USING THE TORQUE WRENCH	25-13
25.9	USING THE POWER TORQUE WRENCH	25-13
25.10	USING A SPANNER WRENCH	25-15

TABLE OF CONTENTS - Continued

Chapter		Page
25.11	CARE	25-15
26	CHISELS	26-1
26.1	HOW TO CHOOSE AND USE THEM	26-1
26.2	TYPES AND USES	26-1
26.2.1	Woodworker's Chisels	26-1
26.2.2	Machinist's Chisels	26-1
26.2.3	Track Chisel	26-2
26.2.4	Rivet Buster Chisel	26-2
26.3	USING A WOODWORKER'S CHISEL	26-2
26.4	USING A MACHINIST'S COLD CHISEL	26-3
26.5	USING A RIVET BUSTER CHISEL	26-4
26.6	CARE OF CHISELS	26-5
27	PUNCHES	27-1
27.1	HOW TO CHOOSE AND USE THEM	27-1
27.2	TYPES AND USES	27-1
27.2.1	Center Punches	27-1
27.2.2	Drift Punch.	27-1
27.2.3	Alignment Punch	27-1
27.2.4	Drive Pin Punch	27-2
27.2.5	Prick Punch	27-2
27.2.6	Starting Punch	27-2
27.2.7	Grommet-Inserting Punch	27-2
27.2.8	Catapunch	27-2
27.2.9	Metal Cutting Punch	27-2
27.2.10	Tinmen's Hollow Punch	27-3
27.2.11	Sheet Metal Punch	27-3
27.2.12	Lever Punch	27-3
27.2.13	Screw Punch	27-3
27.3	USING A CENTER PUNCH	27-3
27.4	USING A DRIFT PUNCH	27-4
27.5	USING AN ALIGNMENT PUNCH	27-5
27.6	CARE OF PUNCHES	27-6
27.7	SCREW PUNCH USAGE	27-6
28	FILES	28-1
28.1	HOW TO CHOOSE AND USE THEM	28-1
28.2	TYPES AND USES	28-1
28.2.1	American Pattern File	28-1
28.2.2	Mill File	28-1
28.2.3	Pillar File	28-1
28.2.4	Round File	28-1
28.2.5	Square File	28-2
28.2.6	Taper File	28-2
28.2.7	Three-Square File	28-2
28.2.8	Warding File	28-2
28.2.9	Curved-Tooth File	28-2
28.2.10	Swiss Pattern File	28-2
28.3	SAFETY	28-3
28.4	USING A FILE	28-3
28.4.1	Selecting Proper File	28-3
28.4.2	Method of Filing	28-3
28.4.3	Draw Filing	28-4
28.5	CARE OF FILES	28-4
28.6	REPLACING THE HANDLE	28-5
29	GRINDERS AND SHARPENING STONES	29-1
29.1	HOW TO CHOOSE AND USE THEM	29-1
29.2	TYPES AND USES	29-1
29.2.1	Bench Grinder	29-1
29.2.2	Valve Grinder	29-2
29.2.3	Sharpening Stones	29-2
29.3	USING A BENCH GRINDER	29-3
29.4	USING A SHARPENING STONE	29-5
29.5	CARE OF BENCH GRINDERS	29-5
29.6	CARE OF SHARPENING STONES	29-6
30	SCRAPERS	30-1
30.1	HOW TO CHOOSE AND USE THEM	30-1
30.2	TYPES AND USES	30-1
30.2.1	Carbon Scraper	30-1
30.2.2	Bearing Scraper	30-1
30.2.3	Box Scraper	30-1
30.2.4	Flat Blade Scraper	30-1
30.2.5	Triangular Blade Scraper	30-2
30.3	SAFETY	30-2
30.4	USING A BEARING SCRAPER	30-2
30.5	CARE OF SCRAPERS	30-2

TABLE OF CONTENTS - Continued

Chapter		Page
31	AWLS	31-1
31.1	HOW TO CHOOSE AND USE THEM	31-1
31.2	TYPES AND USES	31-1
31.2.1	Saddler's Awl	31-1
31.2.2	Scratch Awl	31-1
31.3	USING A SCRATCH AWL	31-1
31.4	CARE OF AWLS	31-2
32	BOLT AND CABLE CUTTERS	32-1
32.1	HOW TO CHOOSE AND USE THEM	32-1
32.2	TYPE AND USES	32-1
32.2.1	Center Cut Cutter	32-1
32.2.2	Clipper Cut Cutter	32-1
32.2.3	Shear Cut, Flat Bar, and Strip Cutter	32-2
32.2.4	Side Nut Splitter Cutter	32-2
32.2.5	Angular Cut Cutter	32-2
32.2.6	Shear Cut Cable Cutter	32-2
32.3	SAFETY	32-2
32.4	USING CENTER CUT CUTTERS	32-3
32.5	CARE OF BOLT AND CABLE CUTTERS	32-3
33	GLASS CUTTERS	33-1
33.1	HOW TO CHOOSE AND USE THEM	33-1
33.2	TYPES AND USES	33-1
33.2.1	Wheel Type Glass Cutter	33-1
33.2.2	Circle Glass Cutter	33-1
33.3	USING A WHEEL-TYPE GLASS CUTTER	33-1
33.4	CARE OF CUTTERS	33-3
34	KNIVES	34-1
34.1	HOW TO CHOOSE AND USE THEM	34-1
34.2	TYPES AND USES	34-1
34.2.1	Rubber Cutting Knives	34-1
34.2.2	Saddler's Knives	34-1
34.2.3	Shop Knife	34-2
34.2.4	Pocket Knife	34-2
34.2.5	Draw Knife	34-2
34.2.6	Putty Knife	34-2
34.3	SAFETY	34-2
34.4	USING A PUTTY KNIFE	34-3
34.5	CARE OF KNIVES	34-3
35	PIPE CUTTING AND THREADING TOOLS	35-1
35.1	HOW TO CHOOSE AND USE THEM	35-1
35.2	TYPES AND USES	35-1
35.2.1	Pipe Cutters	35-1
35.2.2	Pipe Threading Set	35-1
35.3	USING A PIPE CUTTER	35-1
35.4	USING A PIPE THREADING SET	35-3
35.5	CARE OF PIPE CUTTERS AND THREADING SETS	35-6
35.5.1	Pipe Cutters	35-6
35.5.2	Threading Sets	35-6
36	TUBE CUTTING AND FLARING TOOLS	36-1
36.1	HOW TO CHOOSE AND USE THEM	36-1
36.2	TYPES AND USES	36-1
36.2.1	Tube Cutters	36-1
36.2.2	Flaring Tool	36-1
36.3	Using A Flaring Tool	36-2
36.4	CARE OF TUBE CUTTERS AND FLARING TOOLS	36-3
36.4.1	Tube Cutters	36-3
36.4.2	Flaring Tool	36-3
37	SHEARS AND NIPPERS	37-1
37.1	HOW TO CHOOSE AND USE THEM	37-1
37.2	TYPES AND USES	37-1
37.2.1	Hand Shears	37-1
37.2.2	Tinner's Bench Shears	37-1
37.2.3	Metal Shearing Machine	37-1
37.2.4	Nippers	37-2
37.2.5	Cutting Nippers	37-2
37.3	SAFETY	37-2
37.4	USING CUTTING NIPPERS	37-2
37.4.1	Wire Cutting	37-2
37.4.2	Flush Cutting	37-3

TABLE OF CONTENTS - Continued

Chapter		Page
37.5	CARE OF SHEARS AND NIPPERS	37-3
38	TAPS AND DIES	38-1
38.1	HOW TO CHOOSE AND USE THEM	38-1
38.2	TYPES AND USES	38-1
38.2.1	Taps	38-1
38.2.1.1	Taper (Starting) Hand Tap	38-1
38.2.1.2	Bottoming Hand Tap	38-1
38.2.1.3	Pipe Hand Tap	38-1
38.2.1.4	Boiler Hand Taps	38-2
38.2.1.5	Staybolt Taps	38-2
38.2.1.6	Mud Hand Taps (Washout Tap)	38-2
38.2.2	Dies	38-2
38.2.2.1	Rethreading Die	38-2
38.2.2.2	Two-Piece Collet Die	38-3
38.2.2.3	Round Split Adjustable Die	38-3
38.2.2.4	Thread Cutter Set	38-3
38.3	USING A HAND TAP	38-3
38.4	USING A DIE AND DIESTOCK	38-5
38.5	CARE OF TAPS	38-6
38.6	CARE OF DIES	38-6
39	REAMERS	39-1
39.1	HOW TO CHOOSE AND USE THEM	39-1
39.2	TYPES AND USES	39-1
39.2.1	Solid Straight-Hole Reamer	39-1
39.2.2	Solid Taper-Pin Reamer	39-1
39.2.3	Expansion Reamer	39-2
39.2.4	Adjustable-Blade Reamer	39-2
39.3	USING A SOLID STRAIGHT-HOLE REAMER	39-2
39.4	CARE OF REAMERS	39-3
40	BENDERS	40-1
40.1	HOW TO CHOOSE AND USE THEM	40-1
40.2	TYPES AND USES	40-1
40.2.1	Spring Tube Benders	40-1
40.2.2	Electrical Conduit Hand Bender	40-1
40.3	USING A TUBING BENDER	40-2
40.4	USING AN ELECTRICAL CONDUIT HAND BENDER	40-3
40.5	CARE OF BENDERS	40-3
41	PULLERS	41-1
41.1	HOW TO CHOOSE AND USE THEM	41-1
41.2	TYPES AND USES	41-1
41.2.1	Universal Gear Puller	41-1
41.2.2	Gear and Bearing Puller	41-1
41.2.3	Universal Bearing and Bushing Puller	41-1
41.2.4	Electrical Unit Bearing Puller	41-1
41.2.5	Battery Terminal and Small Gear Puller	41-2
41.2.6	Steering Gear Arm Puller	41-2
41.2.7	Push and Pull Puller Set	41-2
41.2.8	Steering Wheel Puller Set	41-2
41.2.9	Wheel Puller Set	41-2
41.2.10	Cylinder Sleeve Puller	41-3
41.2.11	Slide Hammer Puller	41-3
41.2.12	Cotter Pin Puller	41-3
41.3	Using a Gear and Bearing Puller	41-3
41.4	USING A SLIDE HAMMER PULLER SET	41-4
41.5	CARE OF PULLERS	41-4
42	BARS	42-1
42.1	HOW TO CHOOSE AND USE THEM	42-1
42.2	TYPES AND USES	42-1
42.2.1	Wrecking Bar	42-1
42.2.2	Crowbar	42-1
42.2.3	Pinch Bar	42-1
42.2.4	Combination Bar	42-1
42.3	SAFETY	42-1
42.4	USING THE COMBINATION BAR	42-2
42.5	CARE OF BARS	42-2
43	MATTOCKS	43-1
43.1	HOW TO CHOOSE AND USE THEM	43-1
43.2	TYPES AND USES	43-1
43.2.1	Single-Bevel and Double-Bevel	43-1

TABLE OF CONTENTS - Continued

Chapter		Page
43.3	SAFETY	43-1
43.4	USING THE MATTOCK	43-1
43.5	CARE OF MATTOCKS	43-2
44	GASKET CUTTERS	44-1
44.1	HOW TO CHOOSE AND USE THEM	44-1
44.2	TYPES AND USES	44-1
44.2.1	Circle Gasket Cutter	44-1
44.2.2	Bit Brace Circle Gasket Cutter	44-1
44.2.3	Hollow Gasket Cutter	44-1
44.2.4	Heavy Duty Bench Mount Gasket Cutter	44-2
44.3	USING THE GASKET CUTTER	44-2
44.3.1	Using a Circle Gasket Cutter	44-2
44.3.2	Using a Bit Brace Circle Gasket Cutter	44-2
44.3.3	Using a Hollow Gasket Cutter	44-2
44.4	CARE OF GASKET CUTTERS	44-2
45	CHOPPING TOOLS	45-1
45.1	HOW TO CHOOSE AND USE THEM	45-1
45.2	TYPES AND USES	45-1
45.2.1	Axes	45-1
45.2.1.1	Single-Bit Ax	45-1
45.2.1.2	Double-Bit Ax	45-1
45.2.1.3	Crash Ax	45-1
45.2.2	Hatchets	45-1
45.2.2.1	Half-Hatchet	45-1
45.2.3	Adz	45-2
45.2.4	Timber Wedges	45-2
45.3	SAFETY	45-2
45.4	USING THE SINGLE-BIT AX	45-3
45.5	USING THE ADZ	45-4
45.6	USING THE TIMBER WEDGE	45-5
45.7	CARE OF CHOPPING TOOLS	45-5
46	SAWS	46-1
46.1	HOW TO CHOOSE AND USE THEM	46-1
46.2	TYPES AND USES	46-1
46.2.1	Handsaw	46-1
46.2.2	One-Man Crosscut Saw	46-2
46.2.3	Two-Man Crosscut Saw	46-2
46.2.4	Backsaw	46-2
46.2.5	Nested Saws	46-3
46.2.5.1	Keyhole Saw	46-3
46.2.5.2	Compass Saw	46-3
46.2.5.3	Hacksaw	46-3
46.3	SAFETY	46-4
46.4	USING THE CROSSCUT SAW	46-4
46.5	USING THE KEYHOLE SAW	46-5
46.6	USING THE HACKSAW	46-6
46.7	CARE OF SAWS	46-6
47	BRUSH-CUTTING TOOLS	47-1
47.1	HOW TO CHOOSE AND USE THEM	47-1
47.2	TYPES AND USES	47-1
47.2.1	Brush Hook	47-1
47.2.2	Machete	47-1
47.3	SAFETY	47-2
47.4	USING THE BRUSH HOOK	47-2
47.5	CARE OF BRUSH-CUTTING TOOLS	47-2
48	TIMBER HANDLING TOOLS	48-1
48.1	HOW TO CHOOSE AND USE THEM	48-1
48.2	TYPES AND USES	48-1
48.2.1	Timber Carrier	48-1
48.2.2	Peavy	48-1
48.3	SAFETY	48-1
48.4	USING TIMBER HANDLING TOOLS	48-1
48.4.1	Using a Timber Carrier	48-1
48.4.2	Using A Peavy	48-2
48.5	CARE OF TIMBER HANDLING TOOLS	48-2
49	CLIMBING TOOLS	49-1
49.1	HOW TO CHOOSE AND USE THEM	49-1
49.2	TYPES AND USES	49-1
49.2.1	Safety Belt	49-1

TABLE OF CONTENTS - Continued

Chapter		Page
49.2.2	Safety Strap	49-2
49.2.3	Leg Irons	49-2
49.3	SAFETY	49-2
49.4	USING CLIMBING TOOLS	49-2
49.5	CARE OF CLIMBING TOOLS	49-4
50	PLANES	50-1
50.1	HOW TO CHOOSE AND USE THEM	50-1
50.2	TYPES AND USES	50-1
50.2.1	Block Plane	50-1
50.2.2	Bench Plane	50-1
50.3	SAFETY	50-1
50.4	USING THE BLOCK PLANE	50-2
50.5	USING THE BENCH PLANE	50-2
50.6	CARE OF PLANES	50-3
51	DIGGING TOOLS	51-1
51.1	HOW TO CHOOSE AND USE THEM	51-1
51.2	TYPES AND USES	51-1
51.2.1	Long-Handled Shovel	51-1
51.2.2	D-Handled Shovel	51-1
51.2.3	Spade	51-1
51.2.4	Posthole Auger	51-1
51.2.5	Posthole Digger	51-2
51.3	SAFETY	51-2
51.4	USING THE LONG-HANDLED SHOVEL	51-2
51.5	USING THE SPADE	51-3
51.6	USING THE POSTHOLE DIGGER	51-3
51.7	CARE AND CLEANING OF DIGGING TOOLS	51-4
52	ELECTRICAL POWER TOOLS	52-1
52.1	HOW TO CHOOSE AND USE THEM	52-1
52.2	TYPES AND USES	52-1
52.2.1	Portable Electric Drill	52-2
52.2.2	Portable Electric Hammer	52-2
52.2.3	Portable Electric Impact Wrench	52-3
52.2.4	Portable Electric Circular Saw	52-3
52.2.5	Portable Electric Chain Saw	52-3
52.2.6	Portable Electric Disk Sander	52-3
52.2.7	Bench Grinders and Oilstones	52-4
52.3	SAFETY	52-5
52.4	USING THE PORTABLE ELECTRIC DRILL	52-6
52.5	DRILLS, REAMERS, TAPS, AND COUNTERSINKS	52-7
52.5.1	Introduction	52-7
52.5.2	Twist Drills	52-7
52.5.3	Drill Terminology	52-7
52.5.4	Drill Sizes	52-7
52.5.5	Using the Drill	52-8
52.5.5.1	Removing Rivets	52-8
52.5.5.2	Drilling Safety Practices	52-8
52.5.6	Countersinks	52-8
52.5.6.1	Using the Countersink	52-9
52.6	USING THE PORTABLE ELECTRIC HAMMER	52-11
52.7	USING THE PORTABLE ELECTRIC IMPACT WRENCH	52-12
52.8	USING THE PORTABLE ELECTRIC CIRCULAR SAW	52-13
52.9	USING THE ELECTRIC CHAIN SAW	52-15
52.10	CARE OF ELECTRIC POWER TOOLS	52-17
53	SOLDERING	53-1
53.1	INTRODUCTION	53-1
53.2	SOLDERING TOOLS	53-1
53.3	BASIC SOLDERING TECHNIQUES	53-1
53.3.1	Temperatures	53-1
53.3.2	Heating	53-5
53.3.3	Cooling	53-5
53.3.4	Copper Bit Soldering Irons	53-5
53.3.5	Flux Residue Removal	53-6
53.4	SOLDERING SAFETY PRACTICES	53-6
54	PAINT APPLICATION	54-1
54.1	INTRODUCTION	54-1
54.2	PRE-TREATMENT	54-1
54.3	BRUSH PAINTING	54-1
54.3.1	Care of Paintbrushes	54-1

TABLE OF CONTENTS - Continued

Chapter		Page
54.4	SPRAY PAINTING	54-1
54.4.1	Aerosol Can Operation	54-1
54.4.2	Using Aerosol Paint	54-2
55	MISCELLANEOUS TOOLS	55-1
55.1	HOW TO CHOOSE AND USE THEM	55-1
55.2	TYPES AND USES	55-1
55.2.1	Cement Trowel	55-1
55.2.2	Brick Trowel	55-1
55.2.3	Miner's Spoon	55-1
55.2.4	Blocks	55-1
55.2.5	Trip Wire Grapnel	55-2
55.2.6	Chain Assembly	55-2
55.2.7	Cable Jaw Grip	55-2
55.2.8	Tension Puller	55-2
55.3	SAFETY	55-2
55.4	USING THE BRICK TROWEL	55-3
55.5	USING THE BLOCK	55-4
55.6	USING THE CABLE JAW GRIP AND TENSION PULLER	55-5
55.7	CARE OF MISCELLANEOUS TOOLS	55-5
56	PNEUMATIC RATCHETS	56-1
56.1	AIR RATCHETS MODEL NUMBERS FAR70C AND 72B	56-1
APPENDIX A	REFERENCES	A-1
A.1	PUBLICATION INDEXES	A-1
A.2	SUPPLY CATALOGS	A-1
A.3	FORMS	A-1
A.4	OTHER PUBLICATIONS	A-1
INDEX		Index 1

CHAPTER 1
INTRODUCTION

NOTE

Reconditioning of Expendability, Recoverability, and Reparability Category (ERRC) "XB3" type items. Reconditioning includes virtually any minor, common sense maintenance action and is discretionary. Common sense acts of reconditioning are normally within the capability of any level of maintenance and are not to be construed as a repair (AFI 23-101).

1.1 PURPOSE.

This manual provides information on the use and care of selected hand tools and measuring tools. It will explain the types and uses of a large number of tools, a practical application of a selected group of tools, safety requirements, general care, and limited reconditioning. A user must have, choose, and use the correct tools in order to do the work quickly, accurately, and safely. Without the proper tools and knowledge of how to use them, the user wastes time, reduces efficiency, and may face injury.

1.2 HOW TO USE THIS MANUAL.

When you need information about a specific tool or operation, simply refer to the alphabetical index at the end of the manual and turn to the pages that apply. The introduction to each tools chapter will furnish information on: How to choose and use the tools covered, the various types of tools available, and an example of their use. Instructions on the care of tools and safety precautions follow.

CHAPTER 2
SAFETY

SECTION I SAFETY RULES (GENERAL)

2.1 SAFETY AND SAFETY EQUIPMENT.

No matter how small the job, safety must be practiced at all times. A tool may be efficient, essential, time-saving or even convenient; but it is also dangerous. When using any hand tool you must use it correctly, following the methods prescribed in this manual. You must also be alert for any conditions that might endanger yourself or fellow workers. Take the time necessary to acquaint yourself with the safety guidelines in this chapter. Remember, you are the most important part of safety procedures.

There will undoubtedly be a safety program to follow for the shop or area in which you will be working. The following general safety rules are furnished as a guide.

1. SUPPORT your local safety program and take an active part in safety meetings.

2. INSPECT tools and equipment for safe conditions before starting work.

3. KEEP tools in a safe place. Never carry tools in pockets or leave them lying around. Stepping on a round screwdriver, for instance, could cause a bad fall. Clean up the work area when the job is completed. Know the location of all safety equipment and be familiar with its operation.

4. ADVISE your supervisor promptly of any unsafe conditions or practices.

5. LEARN the safe way to do your job before you start.

6. THINK safety, and ACT safety at all times.

7. OBEY safety rules and regulations, they are for your protection.

8. WEAR proper clothing and protective equipment.

9. CONDUCT yourself properly at all times, horseplay is prohibited.

10. OPERATE only the equipment you are authorized to use.

11. REPORT any injury immediately to your supervisor.

In addition to the above, there are other good tools habits which will help you perform your work more efficiently as well as safely.

2.2 TOOL HABITS.

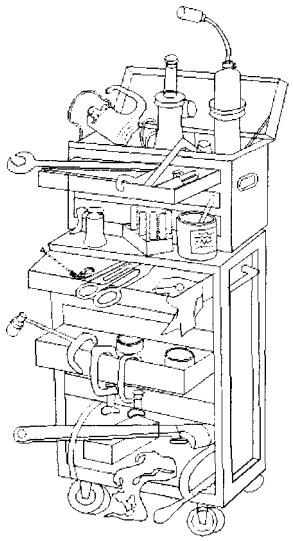

HTMT-002

“A place for everything and everything in its place” is just common sense. You cannot do an efficient, fast repair job if you have to stop and look around for each tool that you need. The following rules, if applied, will make your job easier.

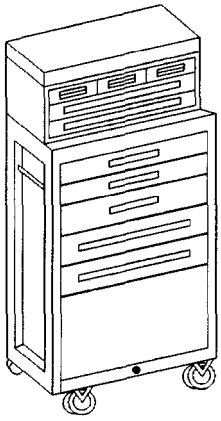

HTMT-003

2.2.1 Keep Each Tool in its Proper Storage Place. A tool is useless if you cannot find it. If you return each tool to its proper place, you will know where it is when you need it.

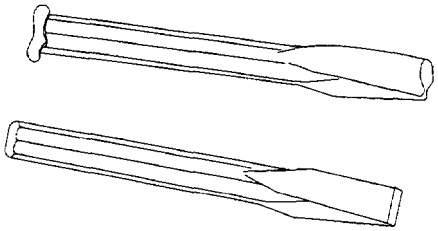

HTMT-004

2.2.2 Keep Your Tools in Good Condition. Tools will NOT be removed from service due to minor surface rust, nicks, burrs or breaks. Tools shall be deemed unserviceable only if the rust, nicks, burrs, or breaks progress to a point that impedes the functionality or proper use of the tool, or presents a safety hazard.

2.2.3 Keep Your Tool Set Complete. If you are issued a tool box, each tool should be placed in it when not in use. If possible, the box should be locked and stored in a designated area. Keep an inventory list in the box and check it after each job. This will help you to keep track of your tools.

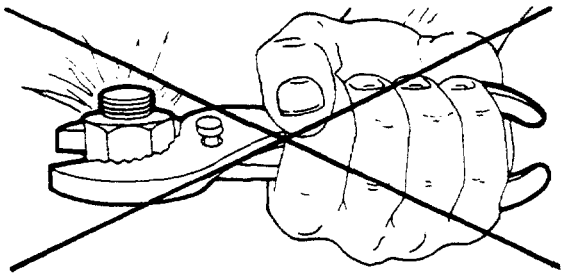

HTMT-005

2.2.4 Use Each Tool Only on the Job for Which it was Designed. If you use the wrong tool to make an adjustment, the result will probably be unsatisfactory. For example, if you use a socket wrench that is too big, you will round off the corners of the wrench or nut. If this rounded wrench or nut is not replaced immediately, the safety of your equipment may be endangered in an emergency.

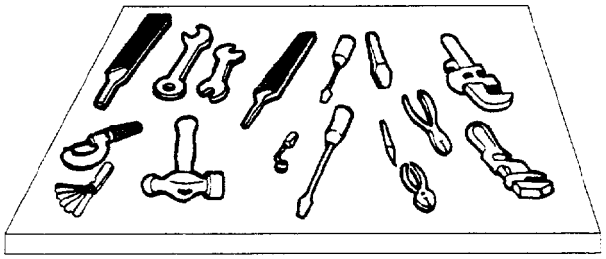

HTMT-006

2.2.5 Keep Your Tools Within Easy Reach and Where They Cannot Fall on the Floor or on Machinery. Avoid placing tools anywhere above machinery or electrical apparatus. Serious damage will result if the tool falls into the machinery after the equipment is turned on or running.

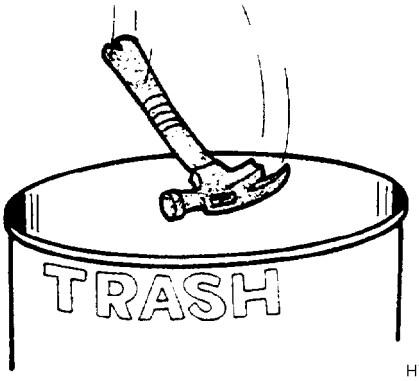

HTMT-007

2.2.6 Never Use Damaged Tools. A battered screwdriver may slip and spoil the screw slot or cause painful injury to the user. A gage strained out of shape will result in inaccurate measurements.

Remember, a worker's efficiency is often a direct result of the condition of the tools being used. Workers are often judged by the manner in which they handle and care for their tools. You should care for hand tools the same way you care for personal property. Always keep hand tools clean and free from dirt, grease, and foreign matter. After use, return tools promptly to their proper places in the tool box. Improve your own efficiency by organizing your tools so that those used most frequently can be reached easily without sorting through the entire contents of the box. Avoid accumulating unnecessary items.

SECTION II SAFETY RULES (POWER TOOLS)

Safety is a very important factor in the use of power tools and cannot be overemphasized. By observing the following safety guidelines, you can ensure maximum benefits from the tools you use and reduce to a minimum the chances of serious injury.

1. Never operate any power equipment unless you are completely familiar with its controls and features.
2. Inspect all portable power tools before using them. See that they are clean and in good condition.
3. Make sure there is plenty of light in the work area. Never work with power tools in dark areas where you cannot see clearly.
4. Before connecting a power tool to a power source, be sure the tool switch is in the “OFF” position.
5. Wear safety glasses when soldering or using power hand tools.
6. When operating a power tool, give it your FULL and UNDIVIDED ATTENTION.
7. DO NOT DISTRACT OR IN ANY WAY DISTURB another person while they are operating a power tool.
8. Never try to clear a jammed power tool until it is disconnected from the power source.
9. After using a power tool, turn off the power, disconnect the power source, wait for all movement of the tool to stop, and then remove all waste and scraps from the work area. Store the tool in its proper place.
10. Never plug the power cord of a portable electric tool into a power source before making sure that the source has the correct voltage and type of current called for on the nameplate of the tool.
11. Do not allow power cords to come in contact with sharp objects, nor should they kink or come in contact with oil, grease, hot surfaces, or chemicals.
12. Never use a damaged cord. Replace it immediately.
13. Check electrical cables and cords frequently for overheating. Use only approved extension cords, if needed.
14. See that all cables and cords are positioned carefully so they do not become tripping hazards.
15. Treat electricity with respect. If water is present in the area of electrical tool operation, be extremely cautious and if necessary, disconnect the power tool.

SECTION III SAFETY EQUIPMENT

Safety equipment is for you. It will protect you from injury and may possibly save your life. Some of the more common types of safety equipment for your personal protection follow.

2.3 SAFETY SHOES.

HTMT-008

Safety shoes protect and prevent injury or loss of toes. Some safety shoes are designed to limit damage to your toes from falling objects. A steel plate is placed in the toe area of such shoes so that your toes are not crushed if an object falls on them.

Other safety shoes are designed for use where danger from sparking could cause an explosion. Such danger is minimized by elimination of all metallic nails and eyelets and the use of soles which do not cause static electricity.

2.4 EYE PROTECTION.

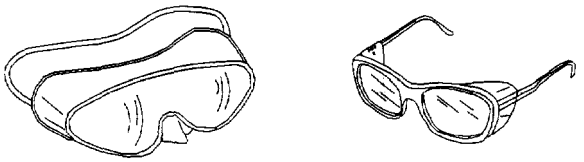

HTMT-009

Proper eye protection is of the highest importance for all personnel. Eye protection is necessary because of hazards caused by infrared and ultraviolet radiation, or by flying objects such as sparks, globules of molten metal, or chipped concrete and wood, etc. These hazards are always present during welding, cutting, soldering, chipping, grinding, and a variety of other operations. It is absolutely necessary for you to use eye protection devices such as helmets, handshields, and goggles during eye-hazard operations. Appropriate use of goggles will limit eye hazards. Some goggles have plastic windows which resist shattering upon impact. Others are designed to limit harmful infrared and ultraviolet radiation from arcs or flames by the use of appropriate filter lenses. Remember, eye damage can be extremely painful. Protect your eyes.

2.5 HELMETS.

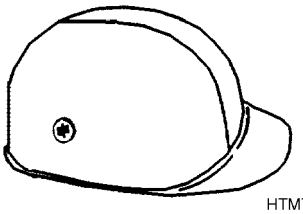

HTMT-010

Protective helmets (hard hats) come in a variety of shapes. They may be made of tough polyethylene or polycarbonate, one of the toughest hat materials yet developed. When falling objects strike the hats, the shock-absorbing suspension capabilities minimize injuries.

Regular hard hats must be insulated so that personnel may be protected from accidental head contacts with electrical circuits and equipment at comparatively low voltages (less than 2200 volts). Electrical workers requiring head protection necessary to their duties or to the working environment, must wear insulating safety helmets or all-purpose protective helmets which must be capable of withstanding 20,000 volt minimum proof-tests.

2.6 GLOVES.

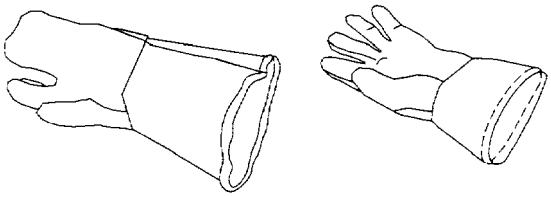

HTMT-011

Use gloves whenever you are required to handle rough, scaly, or splintery objects. Two types are shown above. Special flameproof gloves are designed for gas and electric welding in order to limit danger and damage from sparks and other hot, flying objects. Personnel working with electricity are usually required to wear insulating rubber gloves.

Be sure to follow all regulations prescribed for the use of gloves. Gloves must not be worn around rotating machinery unless sharp or rough material is being handled. If such is the case, extreme care should be used to prevent the gloves from being caught in the machinery.

2.7 SAFETY BELTS AND SAFETY STRAPS.

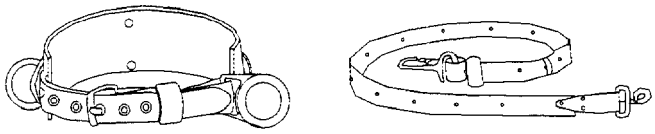

HTMT-012

The safety belt and safety strap are a must when working in high places. The safety belt, strapped around the waist, contains pockets for small tools. It also has two D-rings used to attach the safety strap. The safety strap is a nylon-reinforced leather belt that is placed around the item to be climbed. It is then attached to the two D-rings on the safety belt. Detailed use of the safety belt and safety strap is described in chapter 49 of this manual.

2.8 EAR PROTECTION.

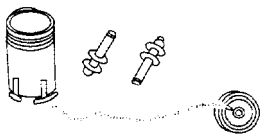

HTMT-013

Proper hearing protection is a must when working with or around certain types of power tools. Some tools are capable of producing dangerously high noise levels which, if ignored, can result in serious hearing loss or injury. Use the hearing protection regularly.

CHAPTER 3
READING MEASURING SCALES

3.1 INTRODUCTION.

The following chapter is designed to provide a basic understanding of how to read scales, dials, and gages. It will not provide any information on the actual use of the tools. Reference to this chapter will be made throughout the remainder of the manual.

3.2 READING THE SCALE OF A RULE OR TAPE.

HTMT-014

The more common type rules and tapes are divided into fractions, inches, and feet. Explained here are the scales on a 12-inch steel machinist's rule. The rule is divided into twelve inches. The inches are further divided into eighths, sixteenths, thirty-seconds, and sixty-fourths.

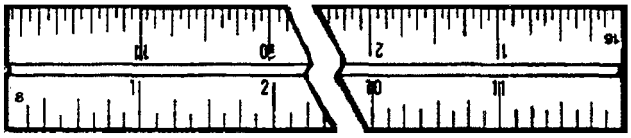

HTMT-015

Look at the rule. There is a small numeral marked on the end of the rule nearest the 1-inch mark. This numeral indicates the number of divisions per inch.

When referring to fractions, always use the reduced name. This is the smallest numerator (top number) and denominator (bottom number). For example, 3/6 can be reduced to 1/2 by dividing both the top and bottom by 3. Generally, fractions may be reduced to their lowest forms by repeated division by 2 or 3.

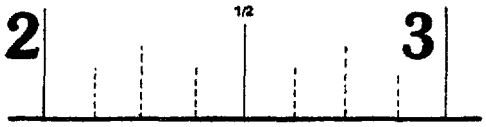

HTMT-016

Look at the section between the "2" and the "3" on the edge marked with an "8" for eighths.

There are eight equally spaced lines. The lengths of these lines differ and indicate different fractions or parts of an inch.

The longest line is in the center and is equal to 4/8 or 1/2 inch.

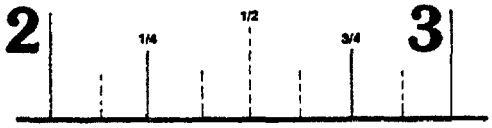

HTMT-017

Each half-inch is divided in half by a slightly shorter line indicating 2/8 or 1/4 on the left and 6/8 or 3/4 on the right.

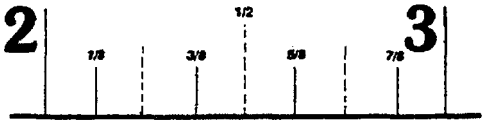

HTMT-018

Each 1/4 inch is divided in half by the shortest line which indicates 1/8 inch, and will indicate 1/8, 3/8, 5/8 and 7/8.

Now turn the rule and look at the edge with a 16 marked on it.

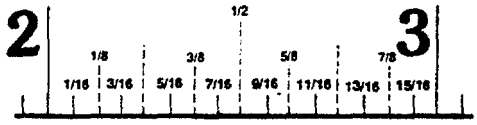

HTMT-019

There are now 16 equal divisions between each inch. Since 2/16 reduces to 1/8, divide each 1/8 into two equal parts producing 1/16, 3/16, 5/16, 7/16, 9/16, 11/16, 13/16, and 15/16.

Common tapes and rules usually are not graduated smaller than sixteenths. However, precision measurements require smaller graduations.

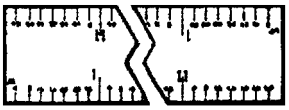

HTMT-020

Look at the back of the machinist's rule. Find the edge marked 32 and once again look between the numbers "2" and "3."

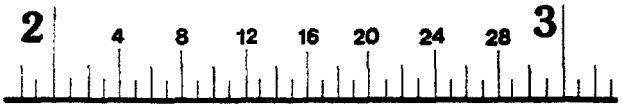

HTMT-021

To read this rule, remember:

1. Sixteen divisions (16/32) are equal to 1/2 inch.
2. Eight divisions (8/32) are equal to 1/4 inch.
3. Four divisions (4/32) are equal to 1/8 inch.
4. Two divisions (2/32) are equal to 1/16 inch.

To read 2-5/8 inches on the scale, first find the two inch mark, then determine the number of 32nds in 5/8.

To determine the number of 32nds in 5/8, remember four divisions or 4/32 are equal to 1/8 inch. If 1/8 is equal to 4/32, then 5/8 is equal to 20/32 as shown:

If 1/8 = 4/32, then 5/8 = 20/32
(4 x 5 = 20)

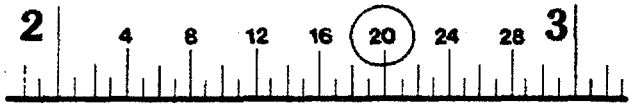

HTMT-022

1. Find the 20/32 reading on the scale as shown above.
2. Write the new fraction 2-20/32 inches.

Finally, look at the edge marked 64. Each inch is now divided into 64 equal parts.

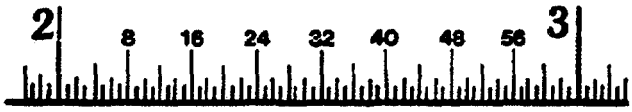

HTMT-023

To read this rule, remember:

1. Thirty-two divisions (32/64) are equal to 1/2 inch.
2. Sixteen divisions (16/64) are equal to 1/4 inch.
3. Eight divisions (8/64) are equal to 1/8 inch.
4. Four divisions (4/64) are equal to 1/16 inch.
5. Two divisions (2/64) are equal to 1/32 inch.

To read 2-3/4 inches on this scale, first find the two inch mark. Next, determine the number of 64ths in 3/4.

To determine the number of 64ths in 3/4, remember every sixteen divisions or 16/64 are equal to 1/4 inch. If 1/4 is equal to 16/64, then 3/4 is equal to 48/64 as shown:

If 1/4 = 16/64, then 3/4 = 48/64
(16 x 3 = 48)

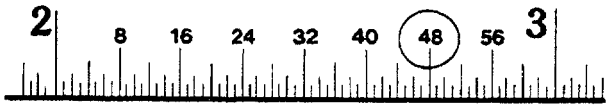

HTMT-024

1. Locate the number 48 between the 2 and 3 inch marks on the scale.
2. Write the new fraction 2-48/64.

3.3 READING A METRIC RULE.

The metric system is based upon multiples of ten. For example, there are 10 millimeters in a centimeter and 100 centimeters in a meter.

The example provided will deal only with millimeters (mm).

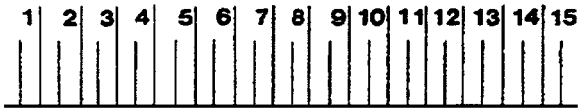

HTMT-025

The meter will become the starting point and from this, two additional scales can be developed for measuring. A meter divided by 100 equals a centimeter (cm), 1/100 or 0.01 meter.

Next divide a centimeter (cm) by 10. This will equal a millimeter (mm), 1/1000 or 0.001 meter.

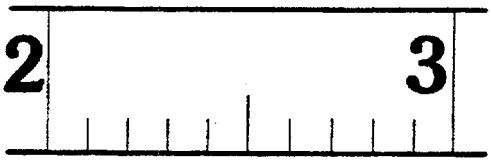

HTMT-026

Now let's look at a section of the rule between 2 cm and 3 cm.

There are 10 equal divisions which are equal to 1/10 cm or 1 mm.

To measure 26 mm, first locate the longest line designated 2 cm or 20 mm.

Next count 6 additional lines to find 26 mm.

A table for converting from US Common to metric or from metric to US Common may be found inside the back cover of this manual.

CHAPTER 4
TOOL BOXES

4.1 HOW TO CHOOSE AND USE THEM.

"Types and Uses", Paragraph 4.2, provides you with a list of some of the types of tool boxes. These pages should help you select the right tool box to do the job.

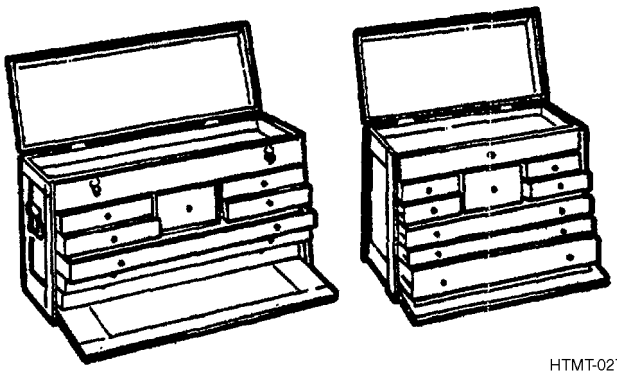

HTMT-027

4.2 TYPES AND USES.

Tool boxes are used for storing tools. They are usually made of steel, but wood and plastics are also used. Portable tool boxes are used for carrying and storing a variety of hand tools. Both special and common tools, such as mechanic's, electrician, and carpentry tools can be found in tool boxes. Chest-type tool boxes generally contain larger tools, such as specialized automotive tools or machinist's tools, requiring a more permanent location. Some larger tool boxes are mounted on wheels so they can be moved easily from place to place. Tool bags are usually made of canvas. Like the boxes, they are available in a variety of sizes and serve similar functions.

Examples of tool boxes are illustrated below.

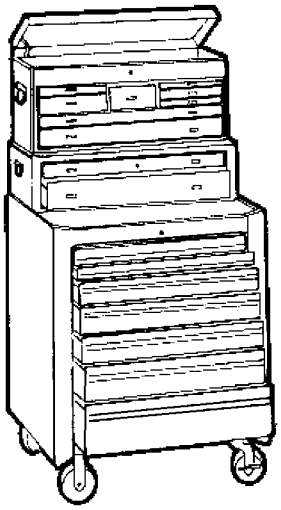

MECHANIC'S TOOL BOX (Chest Type)

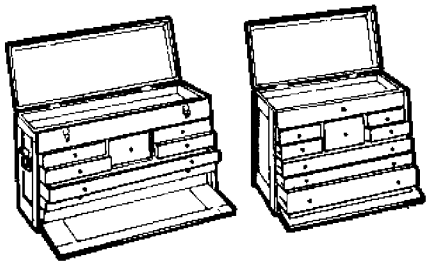

HARDWOOD MACHINIST'S TOOL BOX (Chest Type)

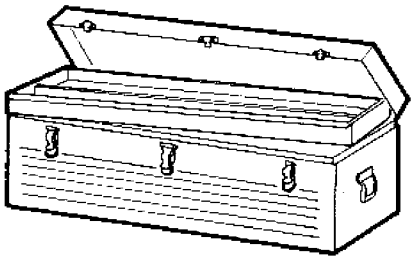

PORTABLE CARPENTER'S TOOL BOX

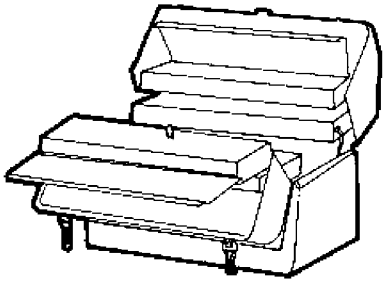

CANTILEVERED TRAY TOOL BOX

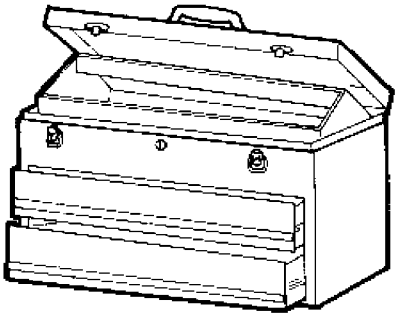

REMOVABLE TRAY TOOL BOX

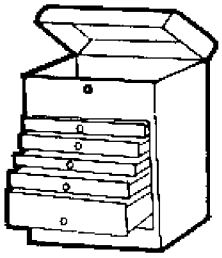

FIVE-DRAWER PORTABLE TOOL BOX

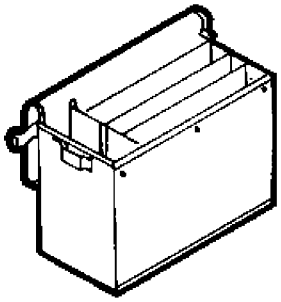

CANVAS TOOL BAG

HTMT-028

CHAPTER 5
DIVIDERS

5.1 HOW TO CHOOSE AND USE THEM.

Types and Uses, Paragraph 5.2, provides you with a list of the types of dividers. These pages should help you select the right dividers for the job. Using a Divider to Scribe a Circle, Paragraph 5.3, tells you how to use the dividers to scribe a circle of a desired radius. Care of Divider, Paragraph 5.4, tells you how to care for the dividers.

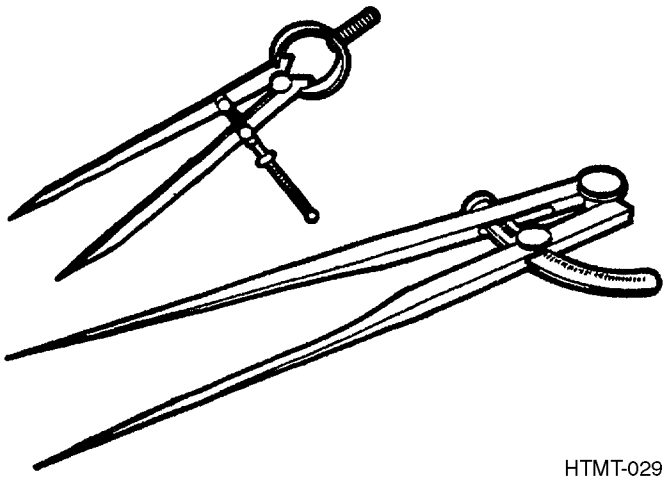

HTMT-029

5.2 TYPES AND USES.

Dividers are instruments used for measuring distances between two points, transferring or comparing measurements directly from a rule, or for scribing an arc, radius, or circle.

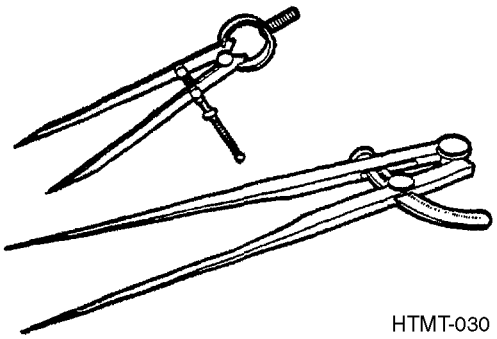

HTMT-030

5.2.1 Spring Divider.

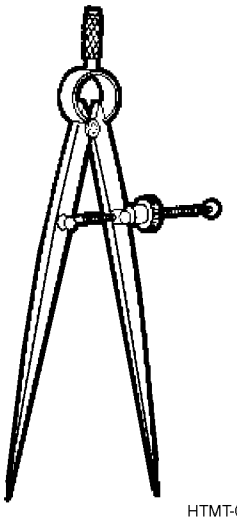

HTMT-031

A spring divider consists of two sharp points at the end of straight legs, held apart by a spring and adjusted by means of a screw and nut. The spring divider is available in sizes from 3 to 10 inches in length.

5.2.2 Wing Divider.

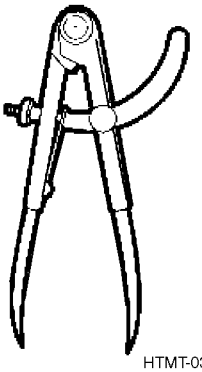

HTMT-032

A wing-type divider has a steel bar that separates the legs, a lock nut for setting a rough measurement, and an adjustment screw for fine adjustments. The wing-type divider is available in 6, 8, and 12 inch lengths. Also available is a divider with one removable leg, so that a pencil may be inserted.

5.3 USING A DIVIDER TO SCRIBE A CIRCLE.

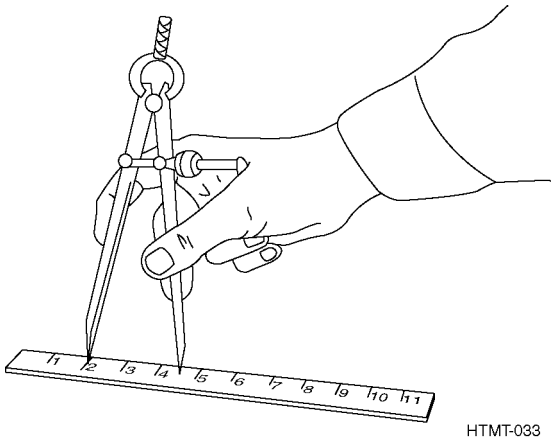

HTMT-033

1. Set the desired radius on the dividers using the appropriate graduations on a rule.

2. Place the point of one of the divider legs on the point to be used as the center.

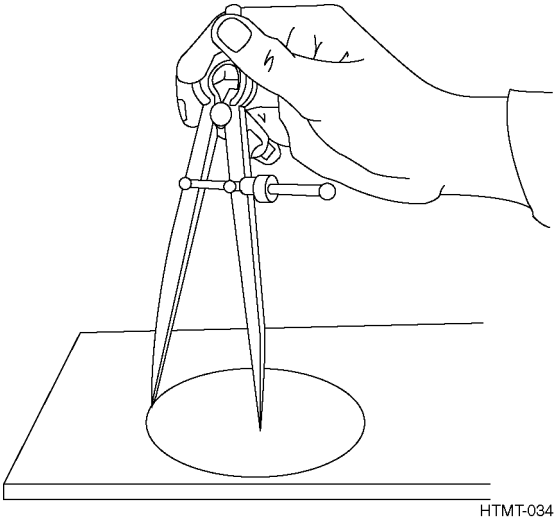

HTMT-034

3. Lean the dividers in the direction of movement and scribe the circle by revolving the dividers.

5.4 CARE OF DIVIDERS.

Keep dividers clean and dry. Protect the points against damage. Store dividers where they will not become bent or broken.

CHAPTER 6
CALIPERS

6.1 HOW TO CHOOSE AND USE THEM.

Types and Uses, Paragraph 6.2, provides you with a list of types of calipers. These pages should help you select the right calipers for the job. Reading Calipers, Paragraph 6.3, tells you how to read special calipers for accurate measurements. By becoming familiar with this procedure, you will learn to make accurate measurements. Care of Calipers, Paragraph 6.5, tells you how to keep your calipers in good condition.

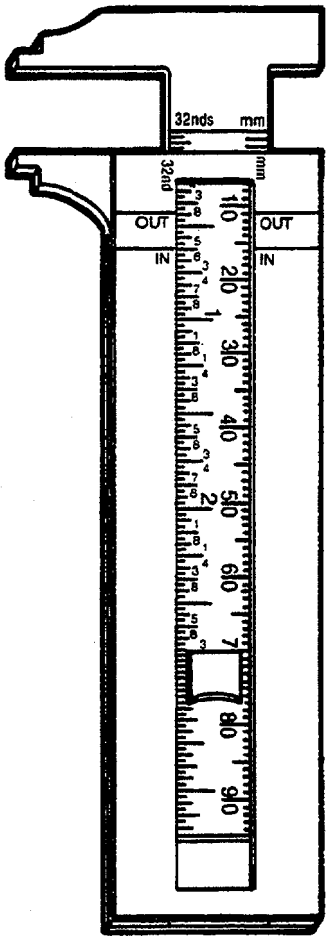

HTMT-035

6.2 TYPES AND USES.

Calipers are used to measure diameters. Outside calipers measure outside diameters. Inside calipers measure inside diameters. Simple calipers are used along with a scale to find the measurement. Slide calipers and vernier calipers have their own scales.

6.2.1 Simple Calipers.

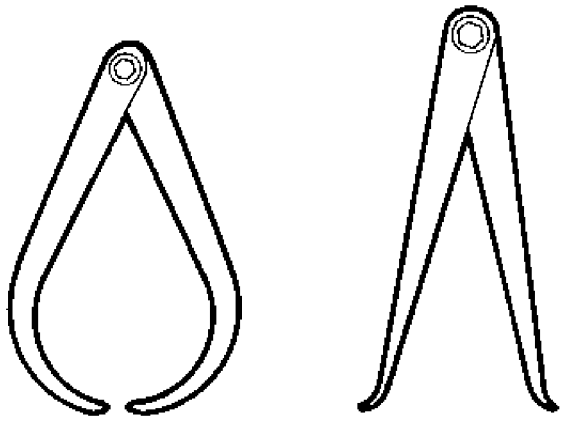

OUTSIDE CALIPERS INSIDE CALIPERS

HTMT-036

The simple outside calipers are bowlegged. Those used for inside diameters have straight legs with feet turned outward. Calipers are adjusted by pulling or pushing the legs to open or close them.

6.2.2 Spring-Joint Calipers.

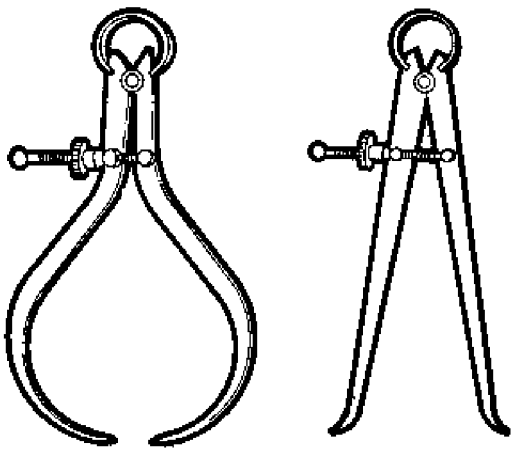

HTMT-037

The spring-joint calipers have the same type of legs, but are joined by a strong spring hinge, screw, and adjustment nut.

6.2.3 Transfer Calipers.

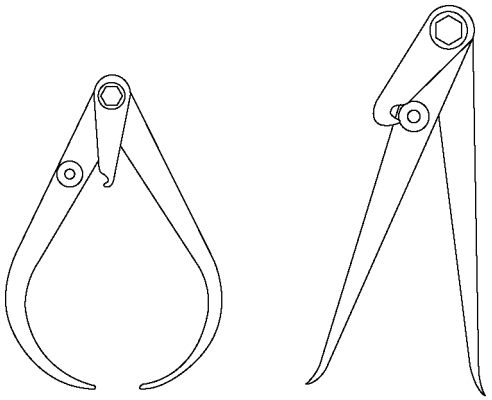

HTMT-038

Transfer calipers are used for measuring chamfered grooves or flanges. A screw attaches a small auxiliary leaf to one of the legs.

The measurement is made as with ordinary calipers. The leaf is locked to the leg. The legs may be opened or closed as needed to clear the obstruction. The legs are then brought back and locked to the leaf, restoring them to the original setting.

6.2.4 Hermaphrodite Calipers.

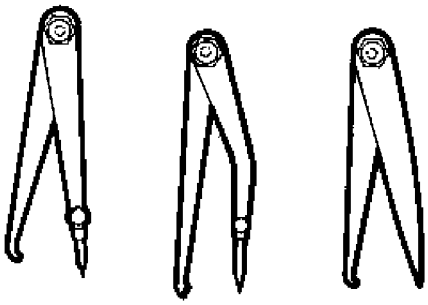

HTMT-039

The hermaphrodite calipers have one straight leg ending in a sharp point. On some models this point is removable. This leg is usually bowlegged. This caliper is used for finding shaft centers or locating shoulders.

6.2.5 Slide Calipers.

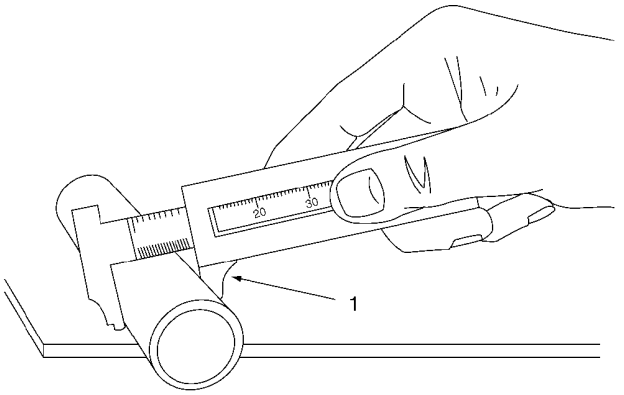

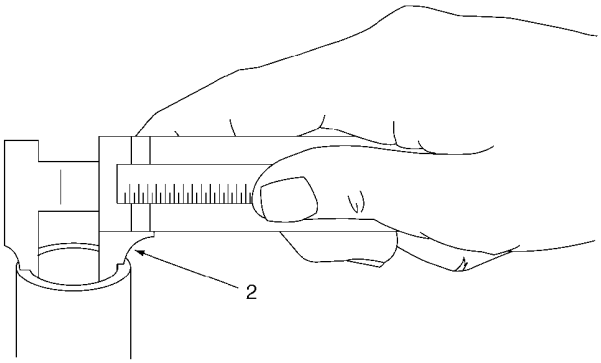

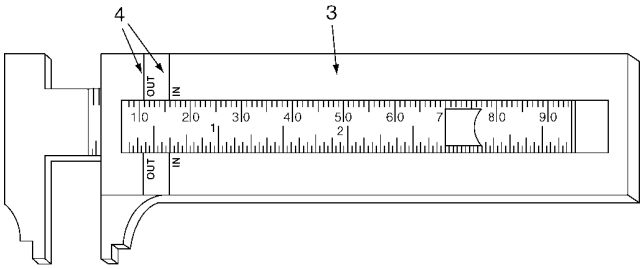

Slide calipers can be used for measuring outside and inside dimensions. Graduations are in inches, fractions, or millimeters. As shown above, one side of the caliper is used to measure outside (1) and the other side is used to measure inside (2) dimensions. Stamped on the frame (3) are the words “IN”. and “OUT” (4). You use them when taking inside and outside measurements. The other side of the caliper is used as a straight measuring rule. If necessary, see Chapter 3 of this manual for reading scales and rules.

6.2.6 Vernier Calipers.

OUTSIDE

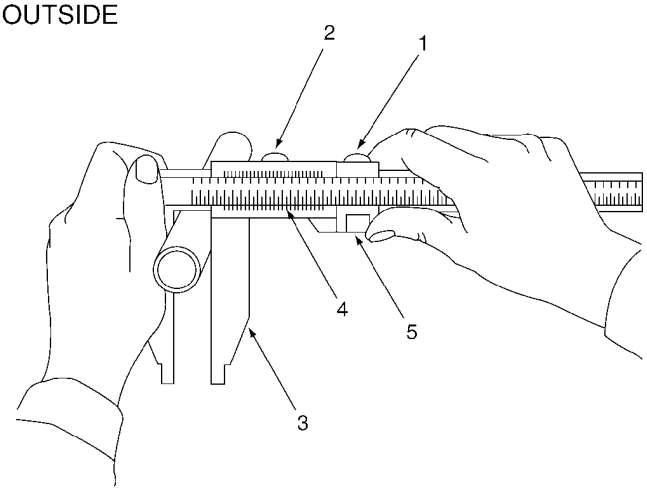

INSIDE

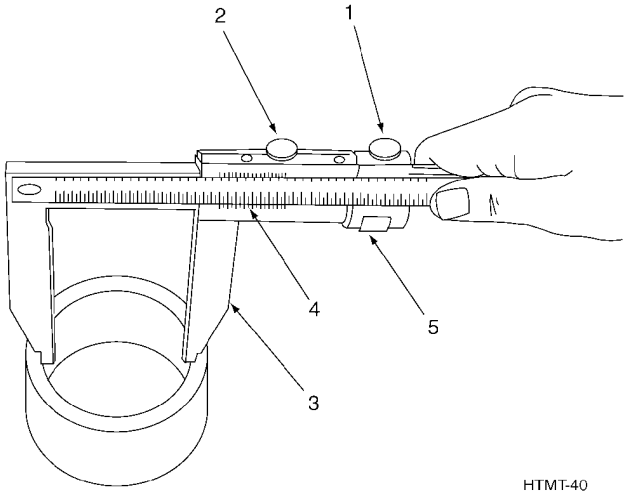

HTMT-40

Vernier calipers work like slide calipers. As shown above, vernier calipers can make very accurate outside or inside measurements. A vernier caliper is used by loosening the two locking screws (1) and (2). This allows the movable jaw (3) to move along the rule until desired position is obtained. The locking screw (1) is then retightened securing the movable jaw (3). Any fine adjustments to the vernier scale (4) are then made using adjustment control (5). Locking screw (2) is then secured and vernier caliper is ready to read.

6.2.7 Trammels.

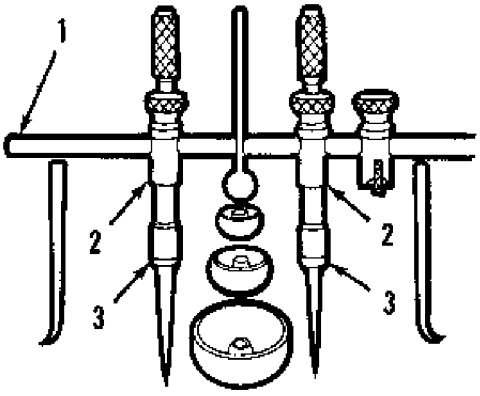

HTMT-041

The trammel measures distances beyond the range of calipers. The instrument consists of a rod or beam (1) to which trams (2) are clamped. The trams (2) carry chucks (3). The trammel can also be used as a divider by changing the points.

6.3 READING A VERNIER CALIPER.

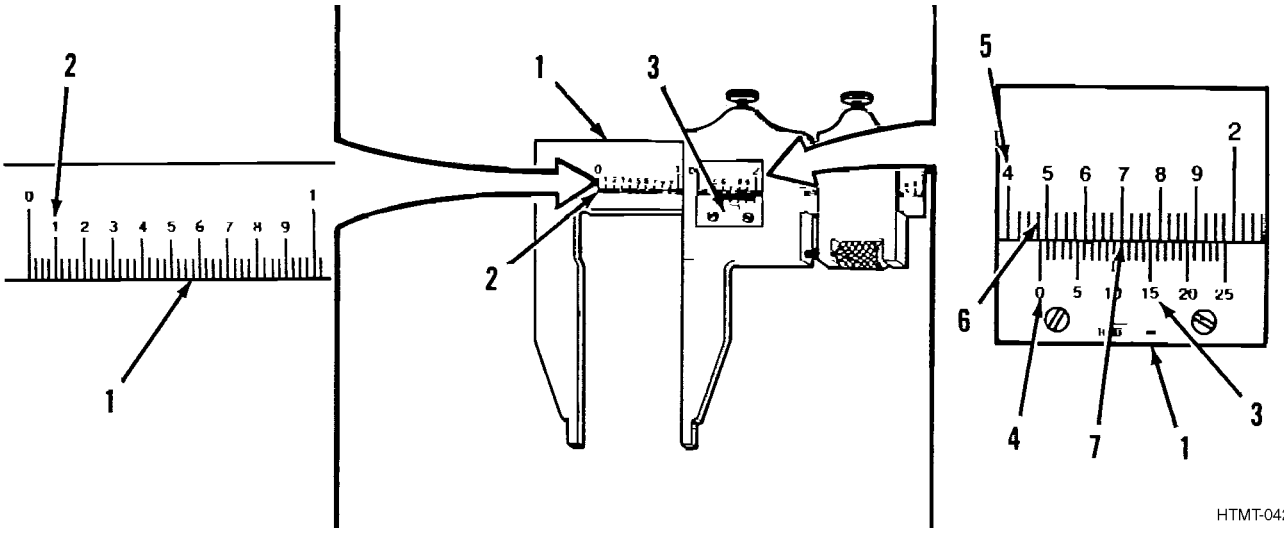

HTMT-042

To read a vernier caliper you must be able to understand both the steel rule and vernier scales. The steel rule (1) is graduated in 0.025 of an inch. Every fourth division (2) (representing a tenth of an inch) is numbered.

The vernier scale (3) is divided into 25 parts and numbered 0, 5, 10, 15, 20, and 25. These 25 parts are equal to 24 parts on the steel rule (1). The difference between the width of one of the 25 spaces on the vernier scale (3) and one of the 24 spaces on the steel rule (1) is 1/1000 of an inch.

Read the measurement as shown above.
Read the number of whole inches on the top scale (1) to the left of the vernier zero index (4) and record .....1.000 inch

Read the number of tenths (5) to the left of the vernier zero index (4) and record .....0.400 inch

Read the number of twenty-fifths (6) between the tenths mark (5) and the zero index (4) and record..... 3 x .025 = .075 inch

Read the highest line on the vernier scale (3) which lines up with the lines on the top scale (7) and record. (Remember 1/25 = 0.001 inch) ..... 11/25 or 0.011 inch

TOTAL 1.486 inches

Most vernier calipers read “OUTSIDE” on one side and “INSIDE” on the other side. If a scale isn’t marked, and you want to take an inside measurement, read the scale as you would for an outside diameter. Then add the measuring point allowance by referring to manufacturer’s instructions or the following table.

Size of Caliper	English Measure	Metric Measure
6 inch or 150 mm	Add 0.250 inch	Add 8.35 mm
12 inch or 300 mm	0.300 inch	7.62 mm
24 inch or 600 mm	0.300 inch	7.62 mm
36 inch or 600 mm	0.500 inch	12.70 mm

6.4 READING A METRIC CALIPER.

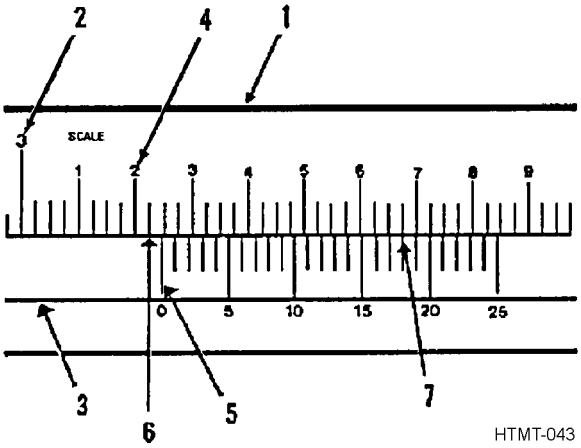

The steel rule (1) is divided into centimeters (cm) (2) and the longest lines represent 10 millimeters each. Each millimeter is divided into quarters.

The vernier scale (3) is divided into 25 parts and is numbered 0, 5, 10, 15, 20 and 25.

Read the total number of millimeters (4) to the left of the vernier zero index (5) and record .....32.00 cm

Read the number of quarters (6) between the millimeter mark and the zero index and record ..... 25 mm = (1 quarter)

Read the highest line on the vernier scale (3) which lines up with the line on the scale (7) and record..... 18 mm

TOTAL 32.43 mm

6.5 CARE OF CALIPERS.

1. As needed, coat metal parts of all calipers with a light coat of oil to prevent rust.
2. Store calipers in separate containers provided.
3. Keep graduations and markings on all calipers clean and legible.
4. Do not drop any caliper. Small nicks or scratches can cause inaccurate measurements.
5. Protect caliper points from damage.

CHAPTER 7
MICROMETERS

7.1 HOW TO CHOOSE AND USE THEM.

Types and Uses, Paragraph 7.2, provides you with a list of the types of micrometers. These pages should help you select the right micrometer for the job. Reading Micrometers, Paragraph 7.4, tells you how to read the different varieties of micrometers. By becoming familiar with the procedures you will learn to make accurate measurements.

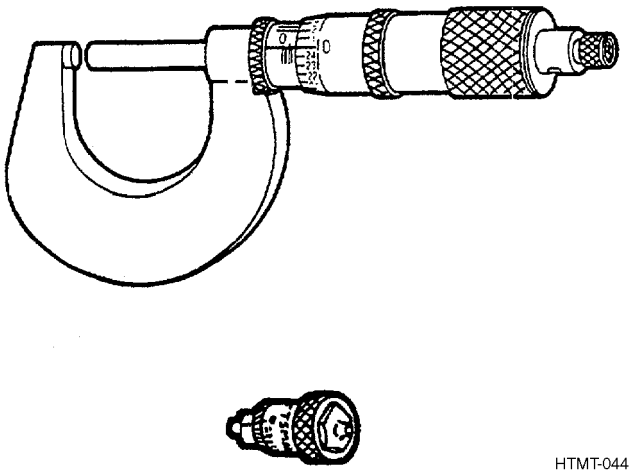

HTMT-044

7.2 TYPES AND USES.

Micrometers are instruments used to measure distances to the nearest one-thousandth of an inch. The measurement is usually expressed or written as a decimal. There are three types of micrometers which are commonly used: the outside micrometer, the inside micrometer, and the depth micrometer.

7.2.1 Outside Micrometers.

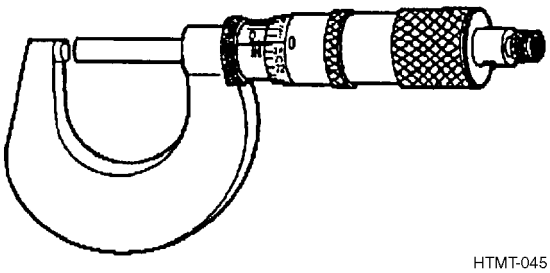

HTMT-045

Outside micrometers are used to measure an outside distance or diameter to an accuracy of 0.001 of an inch.

7.2.2 Inside Micrometers.

HTMT-046

Inside micrometers are used to measure an inside diameter to an accuracy of 0.001 of an inch. ID micrometers have a range of 0.500 when used with one-half inch spacers. (For remaining one-half inch, see page 7-3.)

7.2.3 Depth Micrometers.

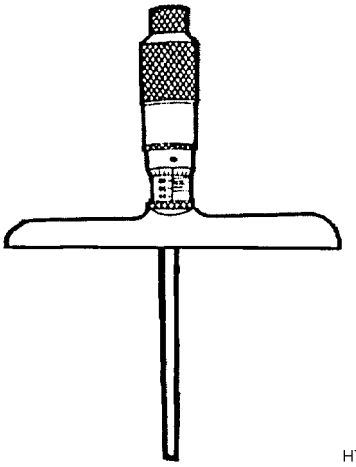

HTMT-047

Depth micrometers are used to measure depths to an accuracy of 0.001 inches.

7.3 SELECTING THE PROPER MICROMETER.

The types of micrometers commonly used are made so that the longest movement possible between the spindle and the anvil is 1 inch. This movement is called the “range.” The frames of micrometers, however, are available in a wide variety of sizes, from 1 inch up to as large as 24 inches. The range of a 1 inch micrometer is from 0 to 1 inch. In other words, it can be used to work where the part to be measured is 1 inch or less. A 2-inch micrometer has a range from 1 inch to 2 inches, and will measure only work between 1 and 2 inches thick. A 6-inch micrometer has a range from 5 to 6 inches, and will measure only work between 5 and 6 inches thick. It is necessary, therefore, that the mechanic first find the approximate size of the work to the nearest inch, and then select a micrometer that will fit it. For example, to find the exact diameter of a piece of

round stock use a rule and find the approximate diameter of the stock. If it is found to be approximately 3-1/4 inches, a micrometer with a 3- to 4-inch range would be required to measure the exact diameter. Similarly, with inside and depth micrometers, rods of suitable lengths must be fitted into the tool to get the approximate dimension within an inch, after which the exact measurement is read by turning the thimble. The size of a micrometer indicates the size of the largest work it will measure.

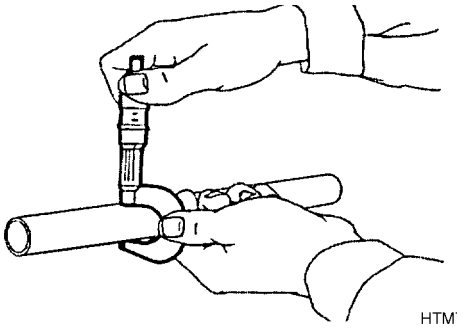

HTMT-048

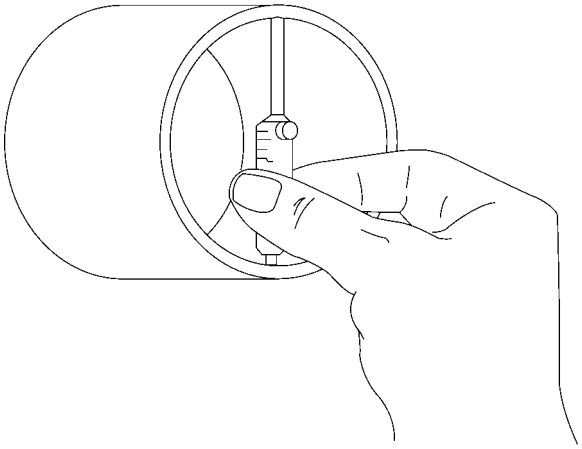

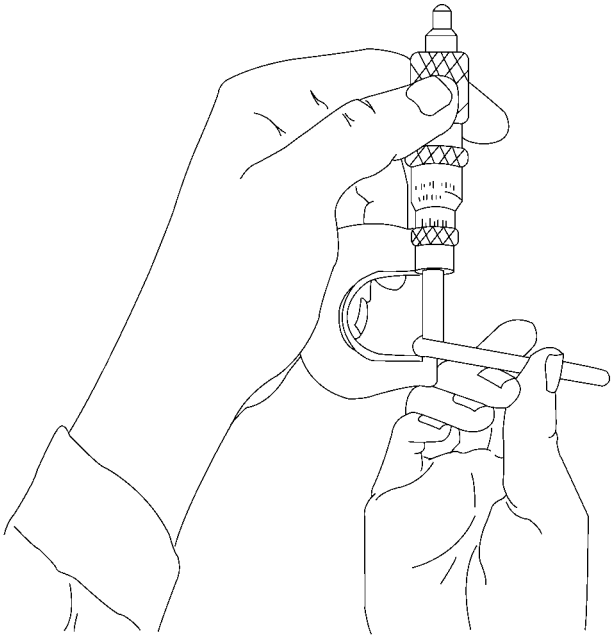

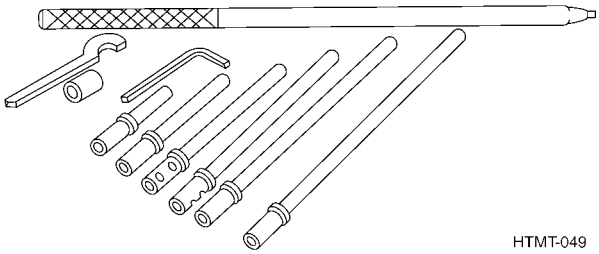

HTMT-049

7.4 READING A STANDARD MICROMETER.

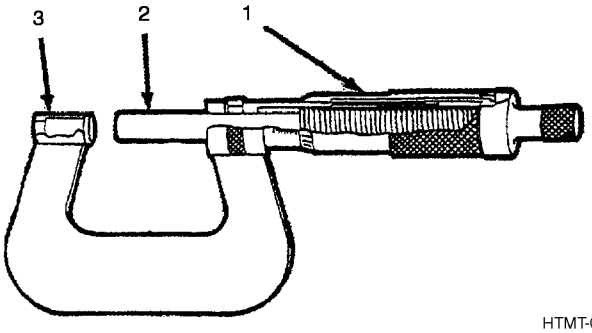

HTMT-050

Reading a micrometer is only a matter of reading the micrometer scale or counting the revolutions of the thimble and adding to this any fraction of a revolution. The micrometer screw has 40 threads per inch. This means that one complete and exact revolution of the micrometer screw (1) moves the spindle (2) away from or toward the anvil (3) exactly1/40 or 0.025 inch.

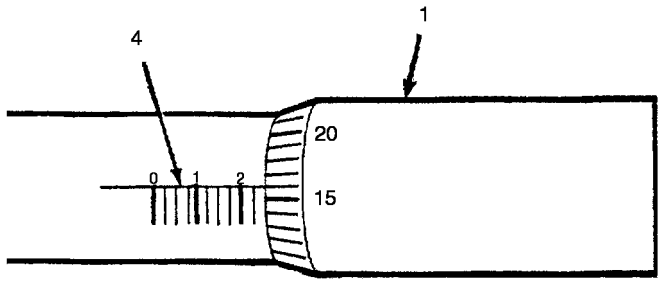

HTMT-051

The lines on the barrel (4) conform to the pitch of the micrometer screw (1), each line indicating 0.025 inch, and each fourth line being numbered 1, 2, 3, and so forth.

The beveled edge of the thimble is graduated into 25 parts, each line indicating 0.001 inch, or 0.025 inch covered by one complete and exact revolution of the thimble. Every fifth line on the thimble is numbered to read a measurement in thousandths of an inch.

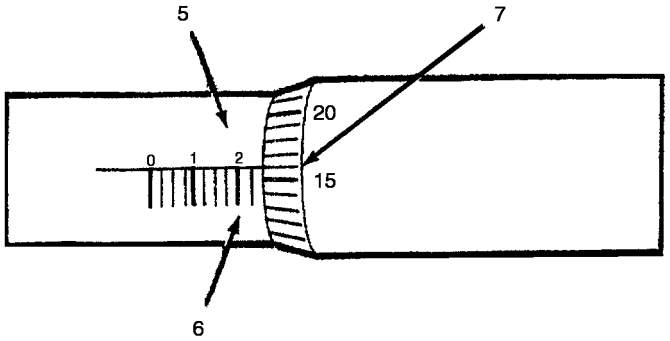

HTMT-052

7.4.1 To Read a Measurement as Shown Above:

Read highest figure visible, on barrel (5) ..... 2 = 0.200 in.

Number of lines visible between the No. 2 and thimble edge (6) ..... 1 = 0.025 in.

The line on the thimble that coincides with or has passed the revolution or long line in the barrel (7) ..... 16 = 0.016 in.

TOTAL = 0.241 in.

7.5 READING A VERNIER MICROMETER.

Reading the vernier micrometer is the same as reading the standard micrometer. An additional step must be taken, to add the vernier reading to the dimensions. This allows for precise measurements which are accurate to ten-thousandths (0.0001) of an inch. This scale furnishes the fine readings between the lines on the thimble rather than making an estimate as you would on a standard micrometer.

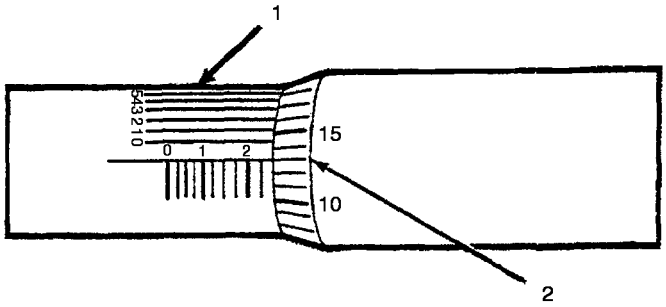

HTMT-053

The ten spaces on the vernier (1) are equivalent to 9 spaces on the thimble (2). Therefore, each unit on the vernier scale is equal to 0.0009 inch and the difference between the sizes of the units on each scale is 0.0001 inch.

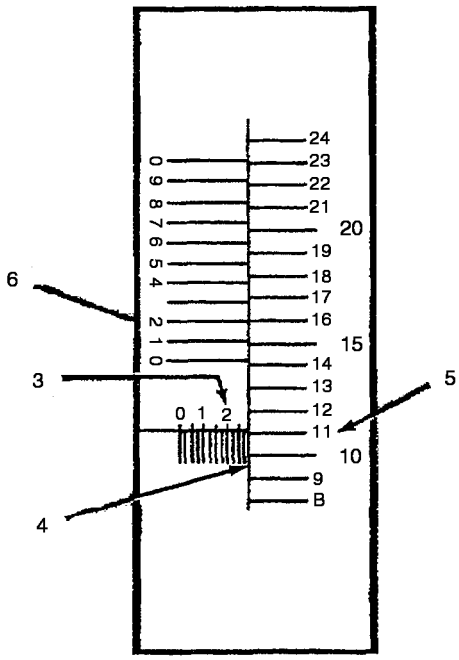

HTMT-054

7.5.1 To Read a Measurement as Shown Above:

Read highest figure visible on
barrel (3) ..... 2 = 0.200 in.

Number of lines visible between
the No. 2 and thimble edge (4) ..... 3 = 0.075 in.

The line on the thimble that
coincides with or is nearest the
revolution or long line in the barrel (5) ..... 11 = 0.011 in.

The-line on the vernier scale that
coincides with the line on the
thimble (6) ..... 2 = 0.0002 in.
TOTAL = .2862 in.

7.6 READING A METRIC MICROMETER.

The same principle is applied in reading the metric graduated micrometer, but the following changes in graduations are used:

The pitch of the micrometer screw is 0.05 mm. One revolution of the spindle advances or withdraws the screw a distance equal to 0.5 mm.

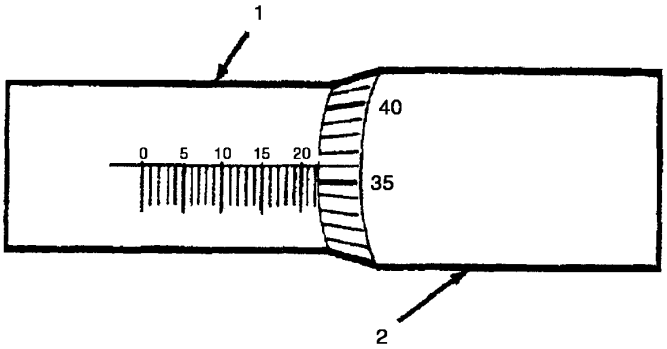

HTMT-055

The barrel (1) is graduated in millimeters from 0 to 25. It takes two revolutions of the spindle to move the barrel 1 mm.

The thimble (2) is graduated in 56 divisions with every fifth line being numbered.

Rotating the thimble from one graduation to the next moves the spindle 1/50 of 0.5 mm, or 1/100 mm. Two graduations equal 2/100 mm, and so forth.

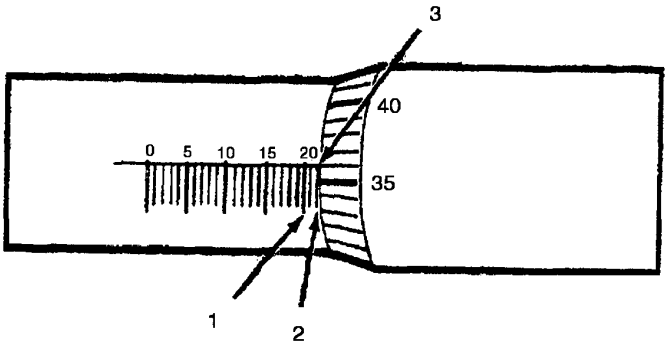

HTMT-056

7.6.1 To Read a Measurement as Shown Above:

Read highest figure visible on barrel (1) ..... 20 = 20.0 mm

Number of lines visible between
the No. 20 and thimble edge (2) ..... 2 = 2.0 mm

The line on the thimble that coincides
with or has passed the revolution
or long line in the barrel (3) ..... 36 = 36/100 (.36) mm

NOTE

Remember that 1 revolution is 0.5 mm. It takes 2 revolutions to move 1 mm.

Measurement reading ..... TOTAL 22.36 mm

7.7 CARE OF MICROMETERS.

1. As needed, coat metal parts of all micrometers with a light coat of oil to prevent rust.

2. Store micrometers in separate containers provided by manufacturer.

3. Keep graduations and markings on all micrometers clean and legible.

4. Do not drop any micrometer. Small nicks or scratches can cause inaccurate measurements.

CHAPTER 8
RULES AND STEEL TAPES

8.1 HOW TO CHOOSE AND USE THEM.

Types and Uses, Paragraph 8.2, provides you with a list of the types of rules and tapes. These pages should help you select the right rule or tape for the job. Using Rules and Tapes, Paragraph 8.3, tells you how to use the various types of measuring instruments. Care of Rules and Tapes, Paragraph 8.4, tell you how to care for rules and tapes.

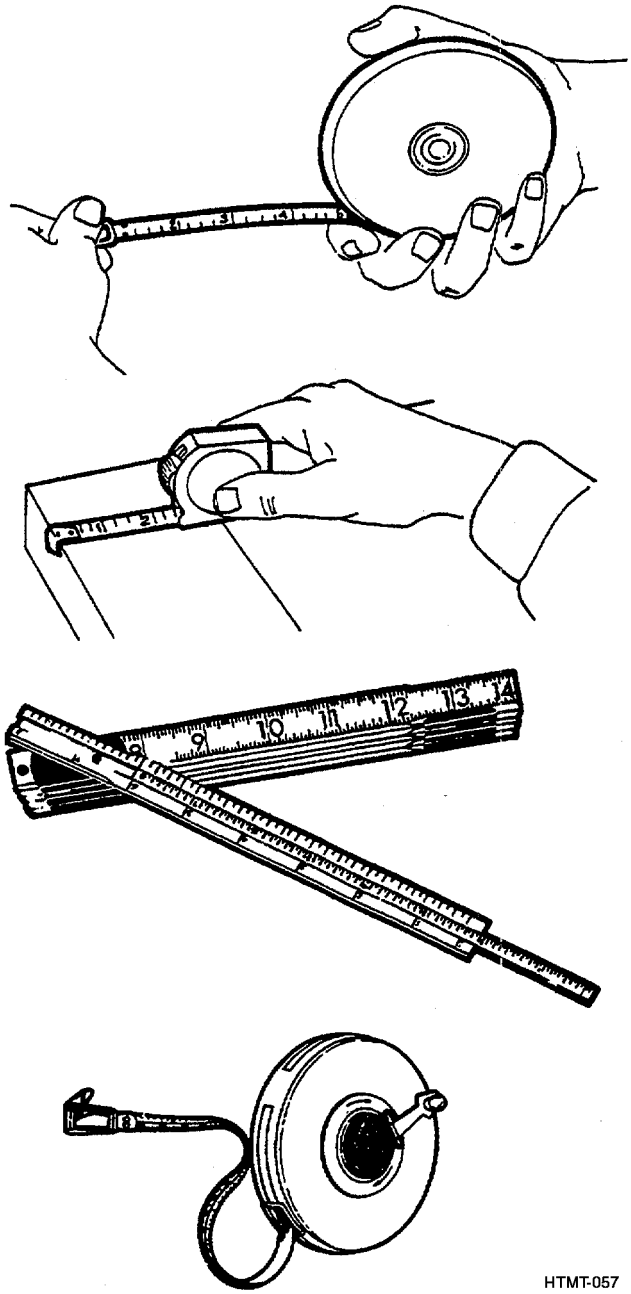

HTMT-057

8.2 TYPES AND USES.

The rule or tape is used for measuring where accuracy is not an extremely critical factor. They can be rigid or flexible, come in various lengths, and can be made of wood, metal, cloth, or fiberglass.

8.2.1 Rules.

HTMT-058

The rule is the most common of measuring tools. This rule is usually 6 or 12 inches in length, although other lengths are available. Steel rules may be flexible or nonflexible, but the thinner the rule, the easier it is to measure accurately because the division marks are closer to the work.

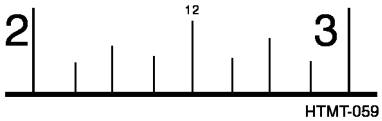

HTMT-059

A rule usually has four sets of graduations, one on each edge of each side. The longest lines represent the inch marks. On one edge each inch is divided into 8 equal spaces so each space represents 1/8-in. The other edge of this side is divided in sixteenths. The 1/4-in. and 1/2-in. marks are commonly made longer than the smaller division marks to facilitate counting, but the graduations are usually not numbered individually, as they are sufficiently far apart to be counted without difficulty. The opposite side is similarly divided into 32 and 64 spaces per inch, and it is common practice to number every fourth division for easier reading.

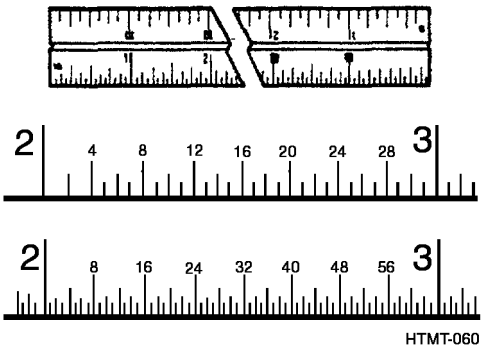

HTMT-060

There are many variations of the common rule. Sometimes the graduations are on one side only, sometimes a set of gradua-

tions is added across one end for measuring in narrow spaces, and sometimes only the first inch is divided into 64ths, with the remaining inches divided into 32nds and 16ths. A metal or wood folding rule may be used.

8.2.2 Folding Rules.

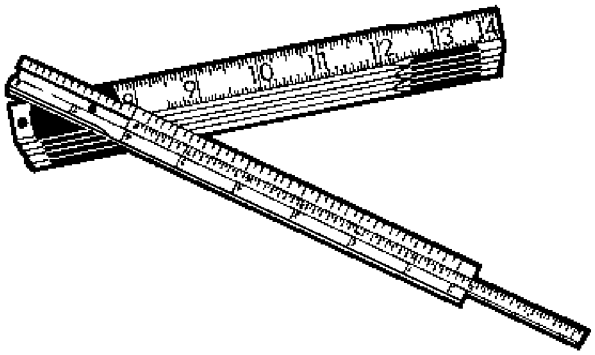

These folding rules are usually from two to six feet long. The folding rules cannot be relied on for extremely accurate measurements because a certain amount of play develops at the joints after continued use.

8.2.3 Steel Tapes.

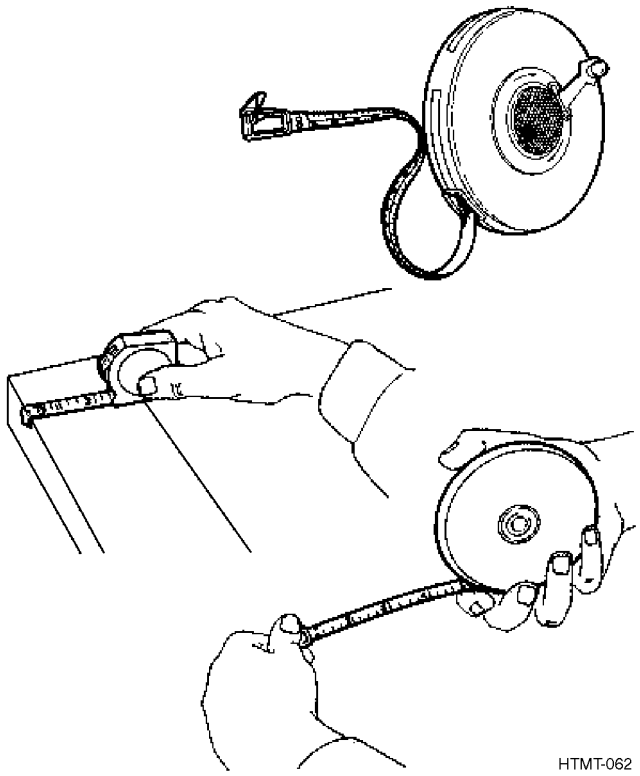

Steel tapes are made from 6 to about 300 feet in length. The shorter tapes are made with a curved, but rigid, cross section flexible enough to be rolled up. Long, flat tapes need support over their full length to avoid sagging. Lack of support can cause reading errors. The most common types of steel tapes have a hook at one end to let one person take all the readings.

8.3 USING RULERS AND TAPES EXAMPLES.

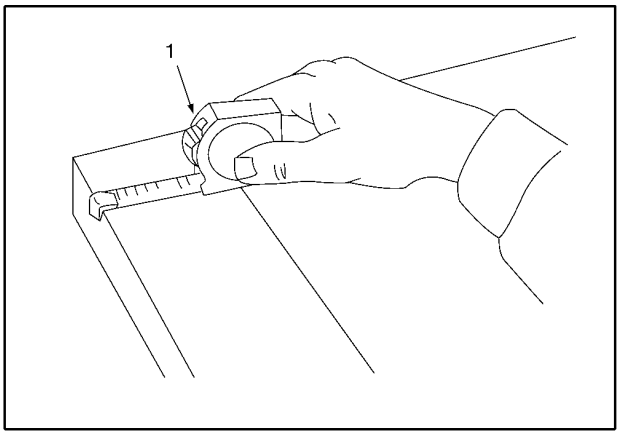

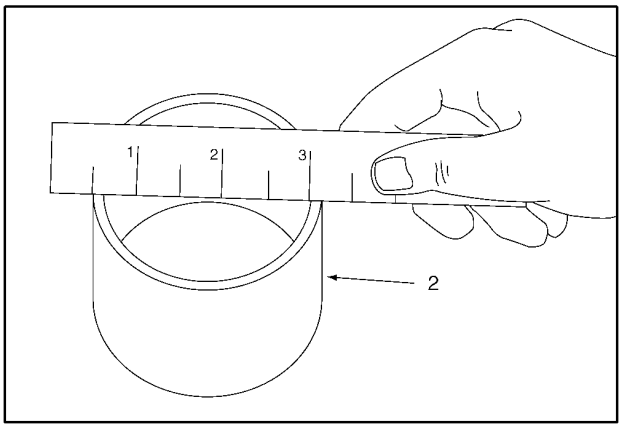

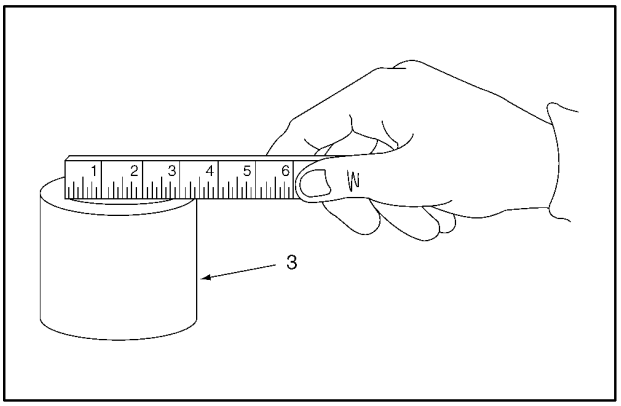

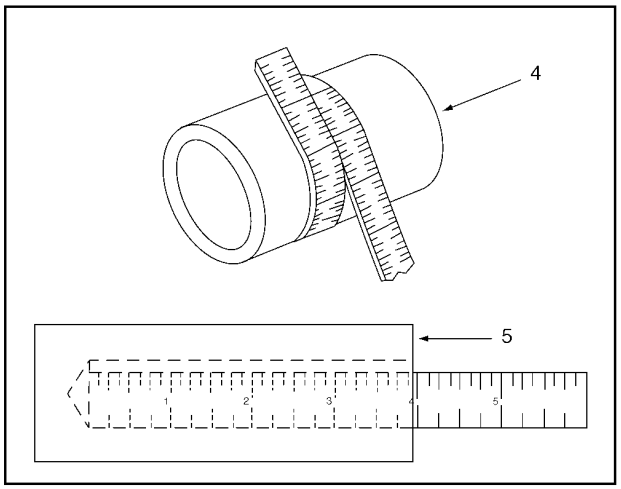

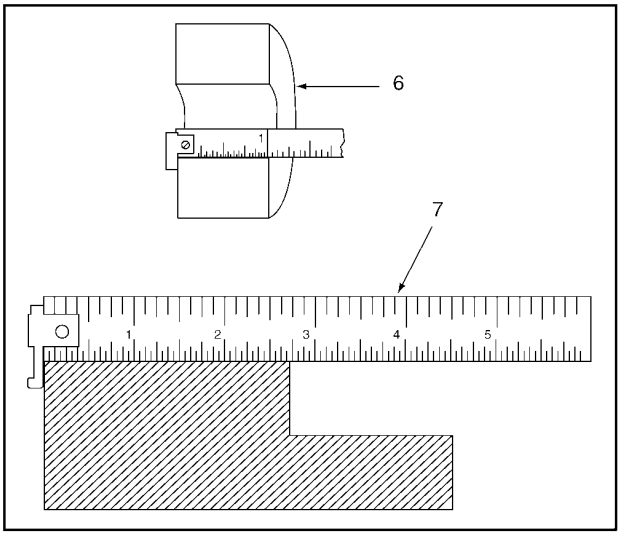

1. RULES AND TAPES USED FOR MEASURING LENGTHS.
2. MEASURING THE OUTSIDE DIAMETER OF PIPE.
3. MEASURING THE INSIDE DJIAMETER OF PIPE.
4. MEASURING THE CIRCUMFERENCE OF PIPE.
5. MEASURING INSIDE DIMENSIONS.
6. MEASURING THE THICKNESS OF STOCK THROUGH A HOLE
7. MEASURING OUTSIDE DIMENSION WITH A TAPE.

HTMT-063

8.4 CARE OF RULES AND TAPES.

1. Keep rules and tapes clean and dry.

2. Store rules and tapes where they will not become bent or damaged.

CHAPTER 9
MISCELLANEOUS MEASURING TOOLS

9.1 HOW TO CHOOSE AND USE THEM.

Types and Uses, Paragraph 9.2, provides you with a list of the more common types of miscellaneous measuring tools. These pages should help you select the right measuring tool for the job. Using, Paragraph 9.3, tells you how to use several of these tools for a certain application. Although there are many other uses for these tools, you should be able to perform most any task by becoming familiar with the procedures outlined in these pages. Care of Miscellaneous Measuring Tools, Paragraph 9.4, tells how to care for your measuring tools.

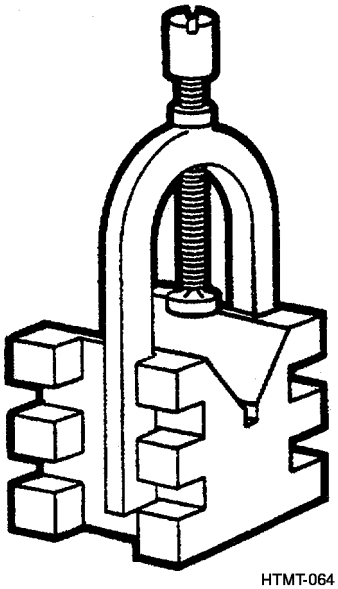

HTMT-064

9.2 TYPES AND USES.

9.2.1 Adjustable Parallel.

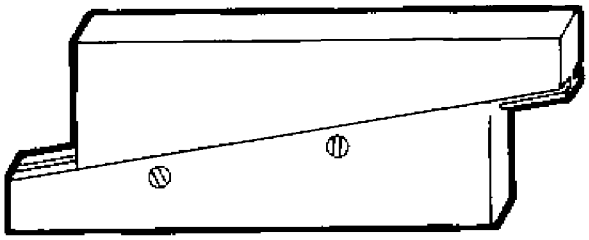

HTMT-065

Adjustable parallels consist of two tapered parts fitted together. The distance between the two outside parallel surfaces varies by moving mating parts together or apart. This distance is then measured with a micrometer. Adjustable parallels are used as gages for leveling and setup work. Adjustable parallels are available in various sizes depending on the nature of work.

9.2.2 V-Block and Clamp.

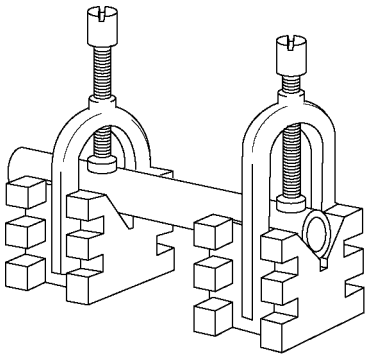

HTMT-066

The V-block and clamp assembly consists of a V-shaped, hardened steel body to support round, square, or rectangular shaped work. A clamp (or clamps) holds the work firmly in the body groove. V-blocks and clamps are especially used for grinding, milling, or drilling purposes. Various styles and designs of V-blocks and clamps are available depending on application.

9.2.3 Angle Plates.

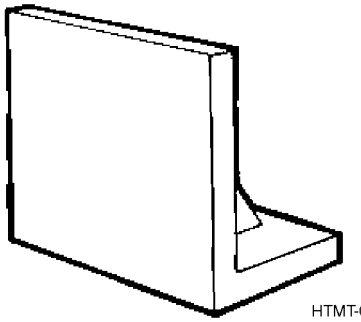

HTMT-067

Angle plates are devices consisting of two flat outside working surfaces jointed at right angles. The outside work surfaces are precision ground. The standard angle plate is permanently jointed at a right angle. However, an adjustable type with varying angle adjustments is also available. Angle plates are used for clamping or holding work vertically. They are also used for layout, inspection, or machine set-up. Various sizes and designs are available depending on the task.

9.2.4 Magnetic Base Indicator Holder.

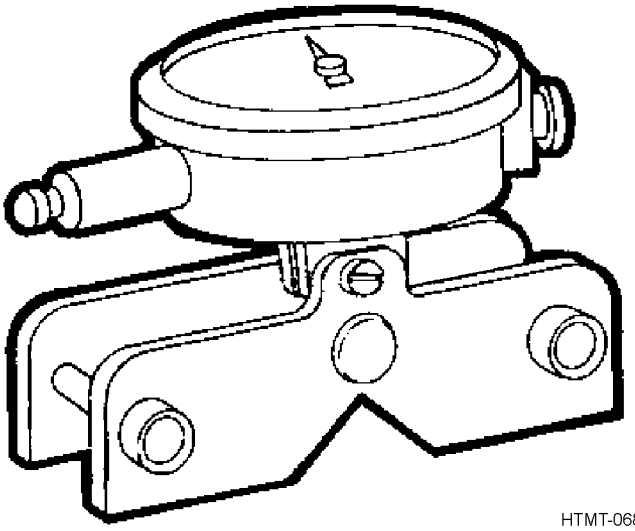

The magnetic base indicator holder is a one-piece metal assembly that attaches to the work surface magnetically. A gage or indicator attaches to the assembly. Base indicator holders are used for attaching gages to lathes, milling machines, shapers, or any machine where graduations are difficult to read. Magnetic base indicator holders are available in many sizes and designs depending on application.

9.2.5 Registering Speed Indicators.

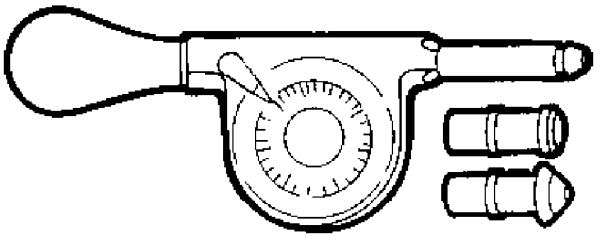

Registering speed indicators are designed to count the number of revolutions of wheels, shafts, etc. Revolutions are counted by attaching spindle of speed indicator to hub of shaft or wheel. Indicator spindle will turn in either direction counting each revolution on a circular dial. Various designs of speed indicators are available depending on nature of use.

9.3 USING MISCELLANEOUS MEASURING TOOLS.

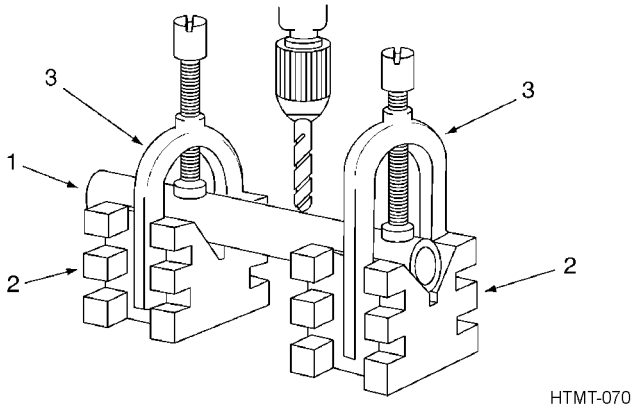

1. Place pipe (1) in V-blocks (2).
2. Secure pipe (1) in position using screw clamps (3).
3. Begin drilling at desired spot on pipe (1).

9.4 CARE OF MISCELLANEOUS MEASURING TOOLS.

1. Clean all tools thoroughly after using.
2. As needed, apply a light coat of oil to all exposed metal parts to avoid rusting.
3. To avoid possible damage to sensitive tools, store tools in proper locations.

CHAPTER 10
LEVELS

10.1 HOW TO CHOOSE AND USE THEM.

Types and Uses, Paragraph 10.2, provides you with a list of types of levels. These pages should help you select the right level for the job. Using a Level, Paragraph 10.3, tells you how to use levels for their various functions (plumbing, leveling, etc).

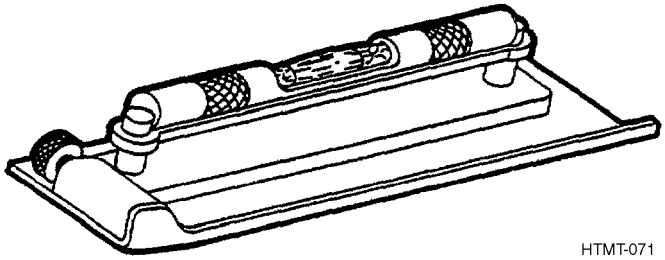

HTMT-071

10.2 TYPES AND USES.

Levels are tools designed to prove whether a plane or surface is in the true vertical or true horizontal. All levels consist of a liquid-filled glass tube or tubes supported in a frame.

10.2.1 Master Precision Level.

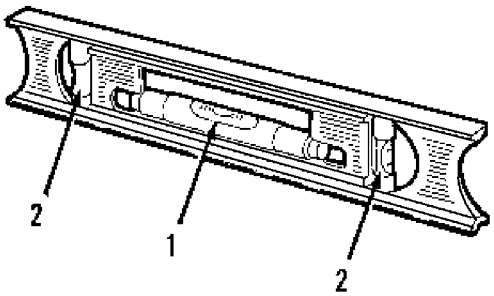

HTMT-072

The master precision level has a ground and graduated main vial (1). The top and bottom of the level are milled and ground to make sure both surfaces are absolutely parallel. This level is used to determine the true horizontal with the main vial (1). The true vertical is determined by using the two smaller vials (2).

10.2.2 Machinist's Level.

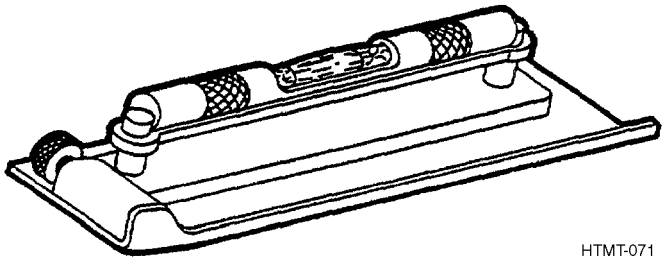

HTMT-071

The machinist's level has an extra large vial. This increases its accuracy and sensitivity. Some of these levels have grooved bottoms which fit over pipes and shafts. They are used in machine shops for leveling work and equipment.

10.2.3 Iron Bench Level.

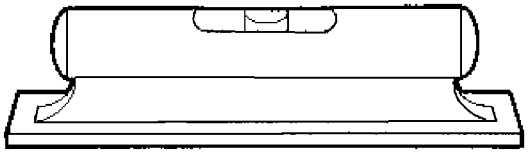

HTMT-074

The iron bench level is made of a special design casting which insures its lightness, strength, and rigidity. It is used mostly in the construction industry. It may also be used in a machine shop.

10.2.4 Striding Level.

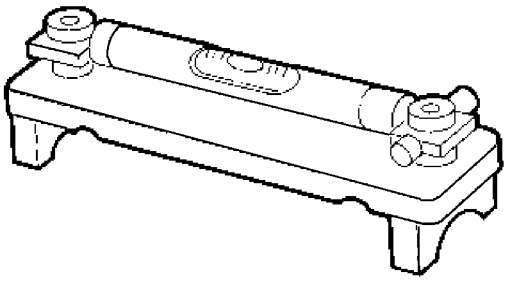

HTMT-075

The iron bench level is made of a special design casting which insures its lightness, strength, and rigidity. It is used mostly in the construction industry. It may also be used in a machine shop.

10.2.5 Carpenter's Level.

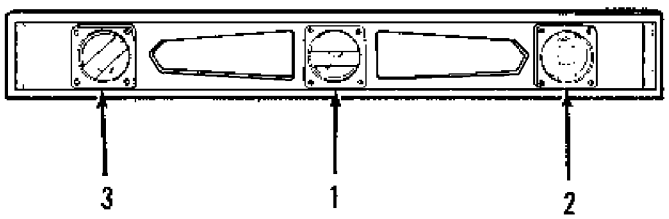

HTMT-076

The carpenter's level has three vials which are mounted horizontally (1), vertically (2), and at a 45 degree angle (3). The carpenter's level is used in construction for checking for true vertical, true horizontal, and 45 degree angles.

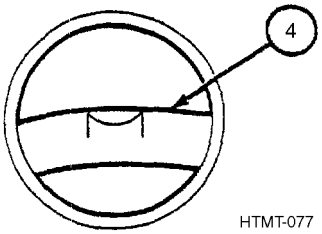

HTMT-077

Some levels have a bent tube (4) which allows the bubble to settle quickly.

10.2.6 Line Level.

The line level is a single vial in a metal case with a hook on each end for hanging on a cord. It is used to check whether two points are level, such as two points on a floor or in an elevation. It must be used with a tightly stretched cord.

10.3 USING A LEVEL.

A level may be checked for accuracy by placing it on a known level surface and noting the position of the bubble. Reverse the level end for end. Observe the position of the bubble. If the relative position of the bubble was the same for both readings, the level is accurate.

10.3.1 Horizontal Surface.

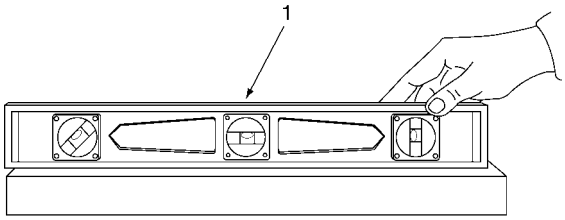

HTMT-079

Place the level on a flat horizontal surface. Check the horizontal vial (1). The bubble should be between the two etched lines on the vial. If it is not, the surface is not horizontal.

10.3.2 Angled Surface.

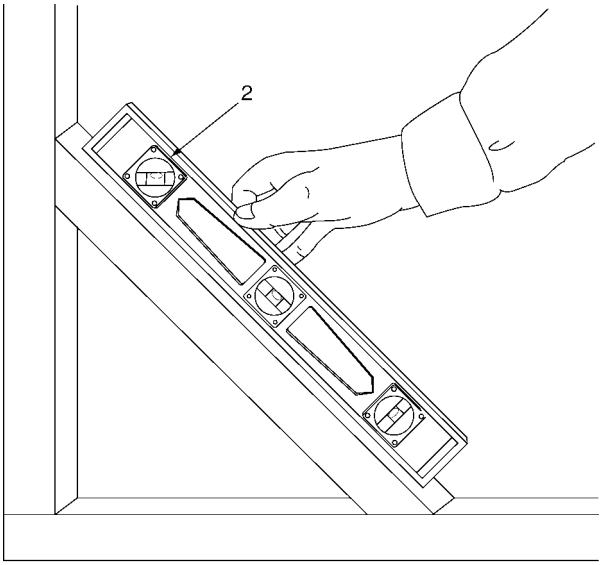

HTMT-080

Place the level on an angled surface. If the angle is 45 degrees, the bubble will appear between the notched lines on the 45 degree vial (2).

10.3.3 Vertical Surface.

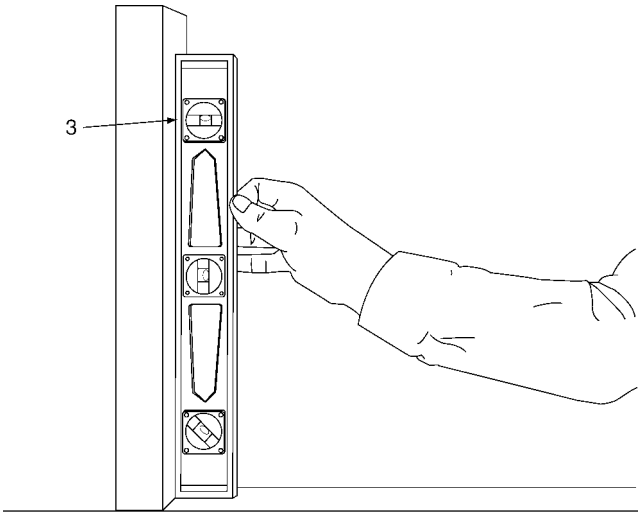

HTMT-081

Place the level against a flat vertical surface. Check the vertical vial (3). The bubble should be between the two etched lines on the vial. If it is not, the surface is not vertical.

CHAPTER 11
PLUMB BOBS

11.1 HOW TO CHOOSE AND USE THEM.

Types and Uses, Paragraph 11.2, provides you with a list of the more common types of plumb bobs. These pages should help you select the right plumb bob for the job. Using a Plumb Bob, Paragraph 11.3, tells you how to use a steel plumb bob to establish the true vertical of a square post. By becoming familiar with this procedure you will build a good background for using other plumb bobs. Care of Plumb Bobs, Paragraph 11.4, tells you how to keep your plumb bobs in proper condition.

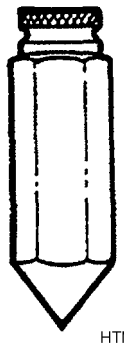

HTMT-082

11.2 TYPES AND USES.

11.2.1 Plumb Bobs. A plumb bob is a precision instrument used to establish a true vertical transfer and line-up reference point, and to take readings or soundings in tanks and voids. Plumb bobs are used by carpenters, surveyors and maintenance technicians.

11.2.2 Surveyor's Polished Brass.

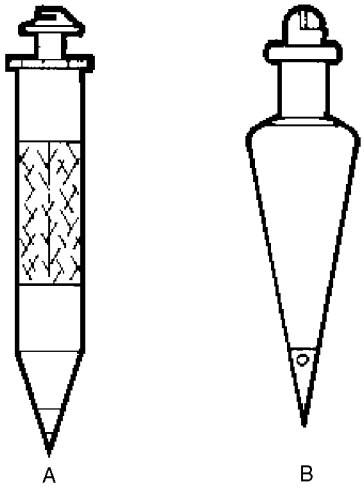

HTMT-083

The surveyor's brass plumb bob may be either a spool type (A) or an adjustable cap type (B). Both types have replaceable steel points for increased accuracy. The adjustable cap allows the operator to make minor corrections to height and rotation to make sure the bob hangs straight. The surveyor's brass plumb bob comes with a minimum of 7 feet of nylon, silk or linen cord. It comes in 6, 8, 10, and 16 ounce sizes. The heavier plumb bobs are better for use in windy areas.

11.2.3 Solid Steel.

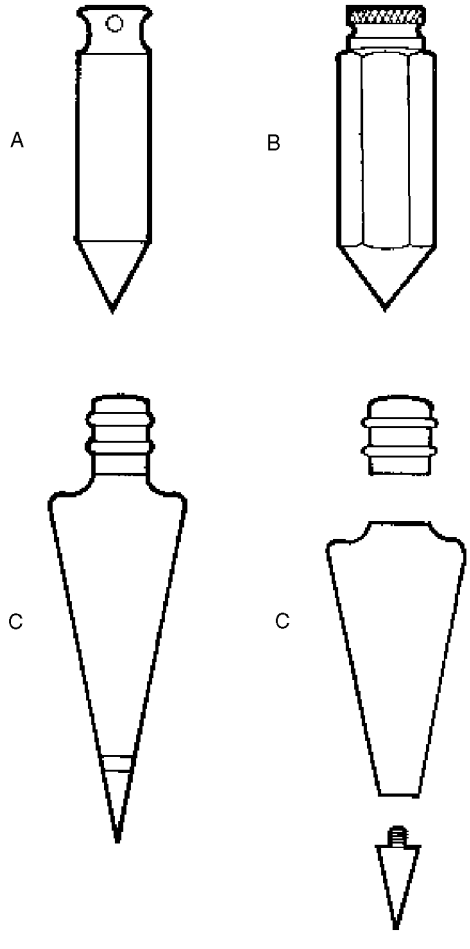

HTMT-084

The solid steel plumb bob (A) may have a machined integral head, body, and point. It may have just a removable head (B), or a removable head and a replaceable point (C). It may be round or hexagonal in shape and it comes in 3, 8, and 12 ounce sizes. Cord for the solid steel bobs must be obtained from a separate source. This type plumb bob is used when extreme accuracy is not required.

11.3 USING A PLUMB BOB.

NOTE

The practice procedure which follows (for establishing the true vertical of a post) uses a plumb bob with a removable head.

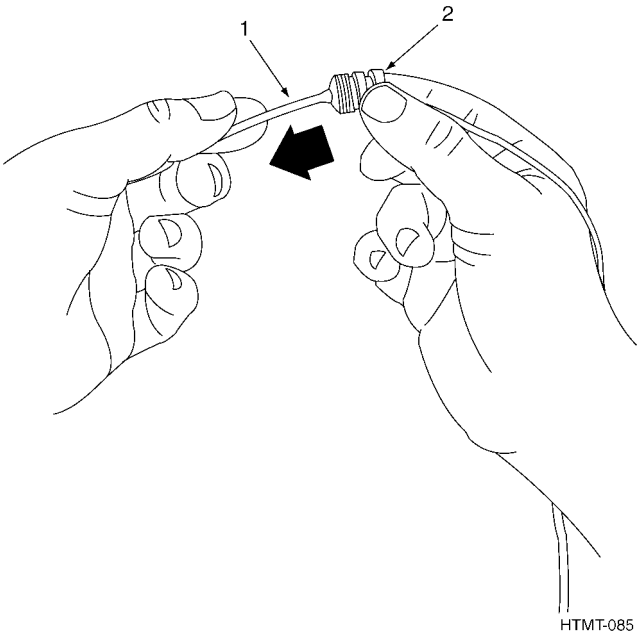

The first step is to attach the cord as follows:

1. Insert a string or cord (1) into the cap (2) of the plumb bob. Make sure the cord will support the plumb bob. Pull the cord through the cap.

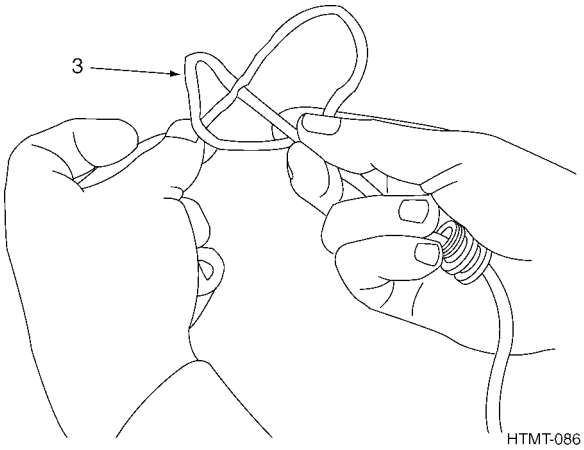

2. Place cap in the palm of your hand and tie an overhand knot (3) in the cord. Pull the cord drawing the knot against cap base. Make sure the knot is not too large or tied at an angle which would affect the hanging of the plumb bob.

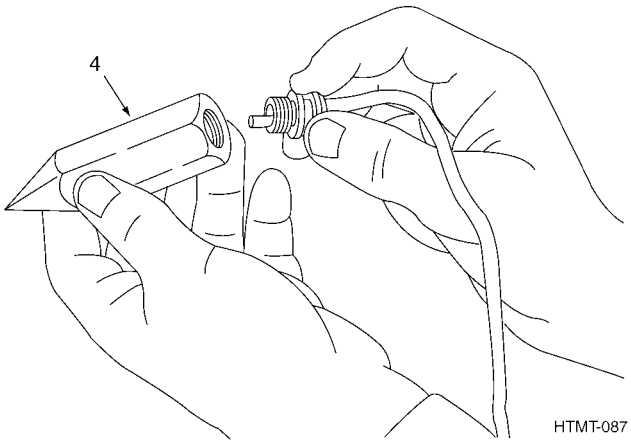

3. Install cap into plumb bob body (4).

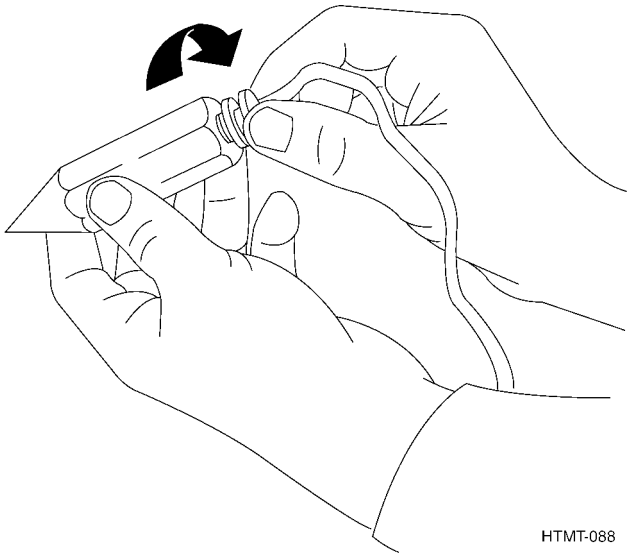

4. Tighten cap securely in the body and suspend the plumb bob by the cord only. Make sure the knot will support the plumb bob.

NOTE

- The following task is not the only use of a plumb bob.
- Post hole must be dug and an assistant is required before starting the task.

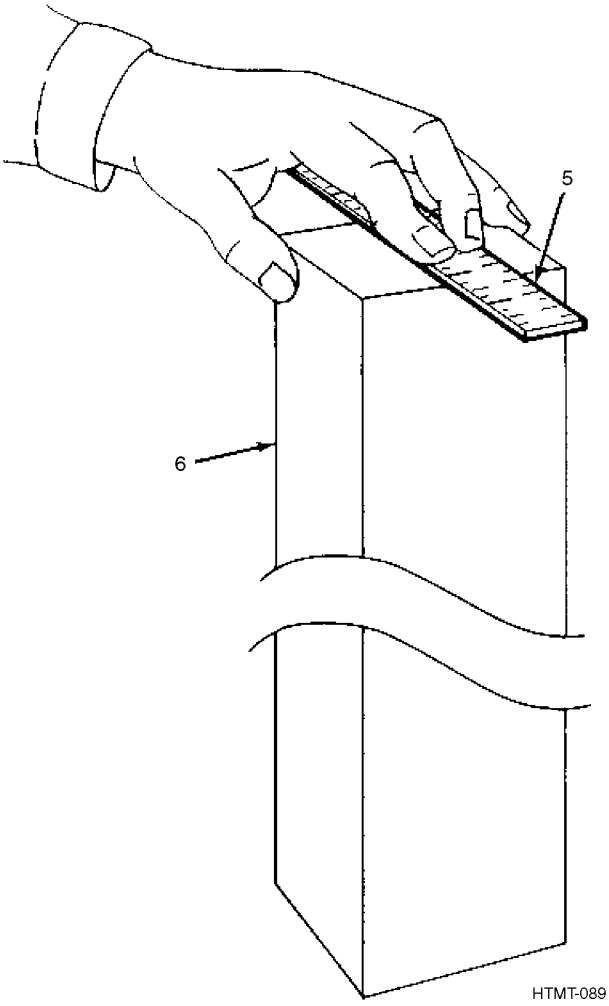

5. Place a ruler (5) on the top of the post (6) so that it extends 2 inches beyond an edge.

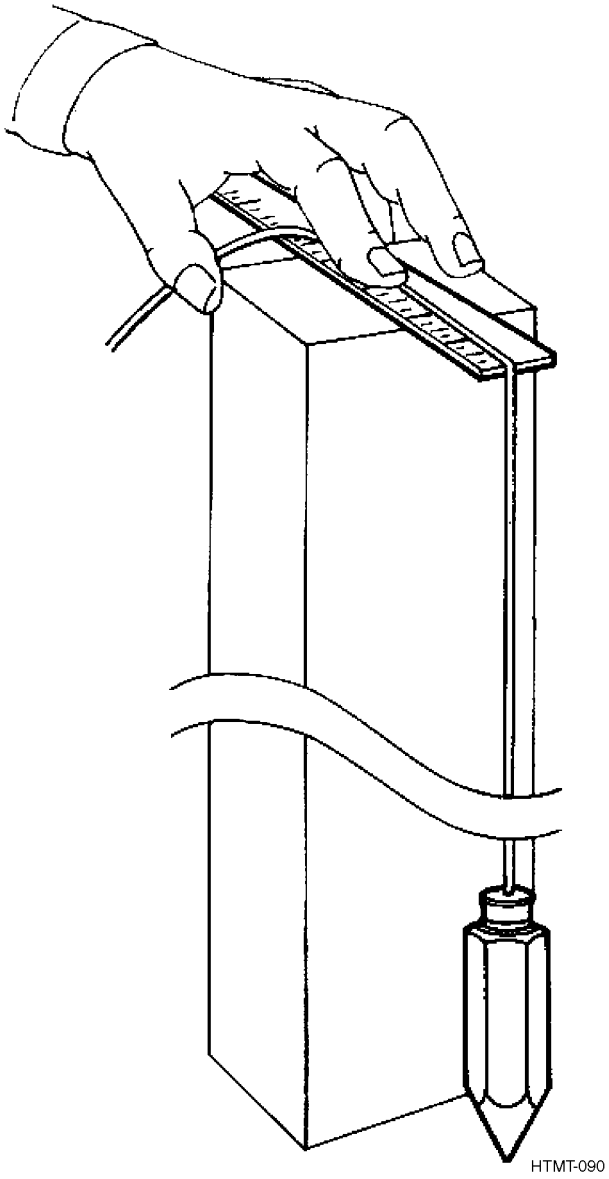

6. Hang string and plumb bob so they extend over end of ruler and the plumb bob is just above the ground surface.

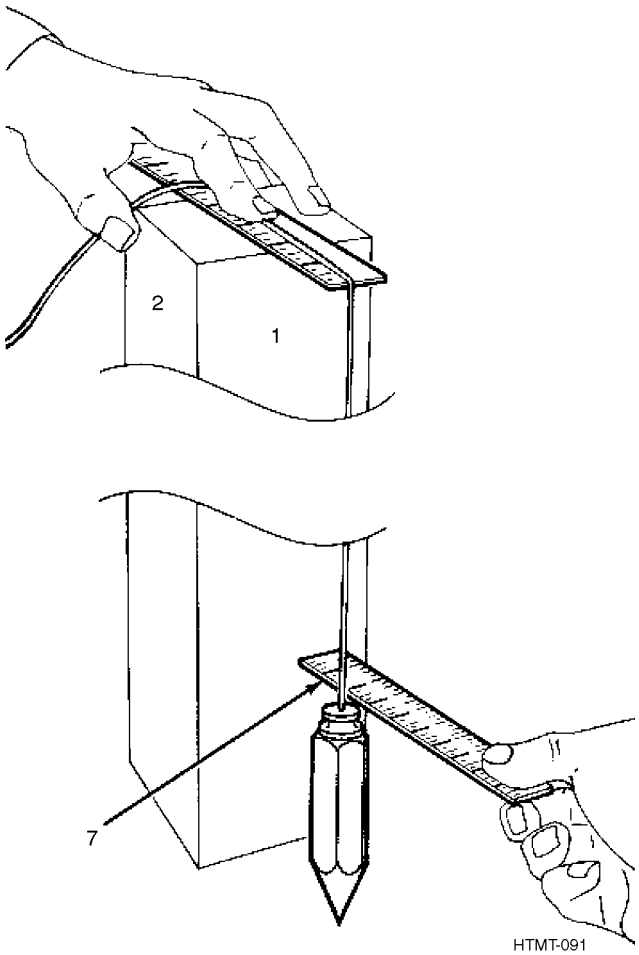

7. Have the assistant measure distance (7) from post to string just above the plumb bob. It should read 2 inches. If it doesn't, move the base or the top of the post right or left until you get a 2-inch reading on both rules.

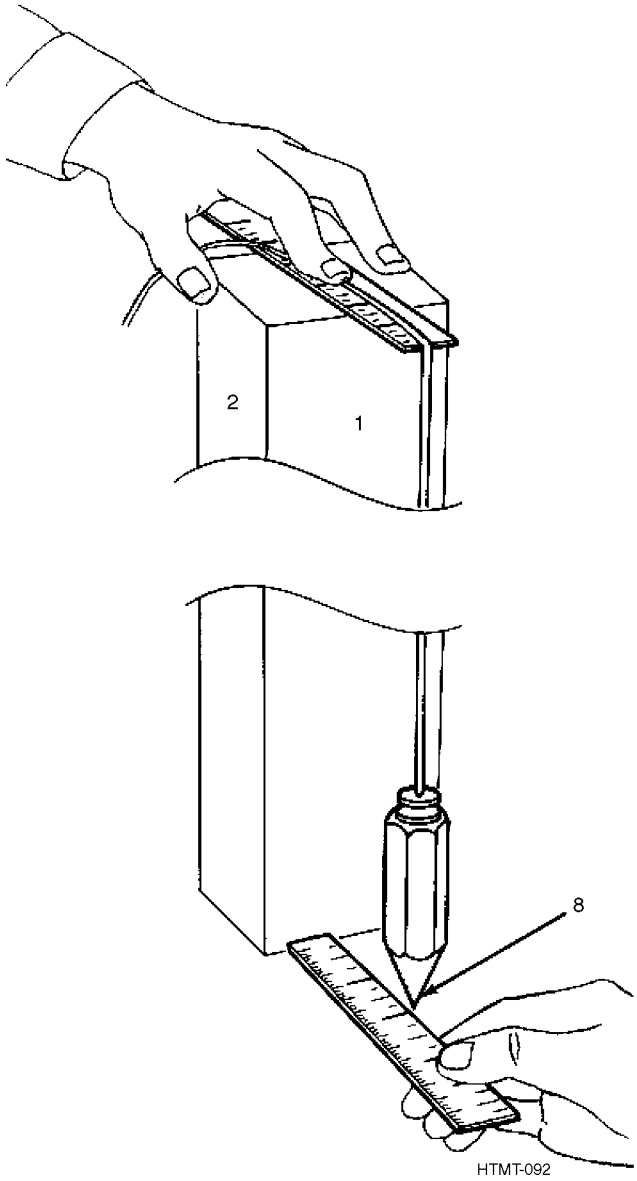

When extreme accuracy is desired, measurement would be taken to the point of the plumb bob (8). Repeat steps 5, 6, and 7 on side 2.

11.4 CARE OF PLUMB BOBS.

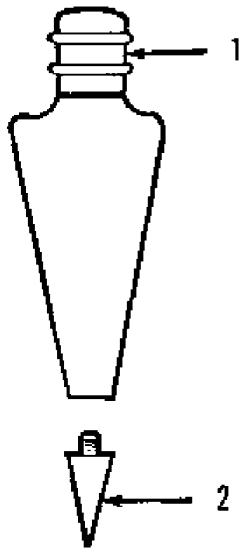

HTMT-093

1. Handle plumb bobs with care. Do not use a plumb bob as a hammer or lever. As needed, lightly coat plumb bobs with lubricating oil for short periods of storage. As needed for longterm storage, apply a heavy coat of oil and wrap the plumb bob in oil-soaked paper.

2. Store plumb bobs in a protective box in a dry place. As needed, make certain threads of removable caps (1) and points (2) are lightly coated with lubricant and placed in a protective box.

CHAPTER 12
SCRIBERS

12.1 HOW TO CHOOSE AND USE THEM.

Types and Uses, Paragraph 12.2, provides you with a list of the types of scribers. These pages should help you select the right scriber for the job. Using a Mechinist's Scriber, Paragraph 12.3, tells you how to use the scriber to scribe an orientation mark. Care of Scribers, Paragraph 12.4, tells you how to care for the scribers.

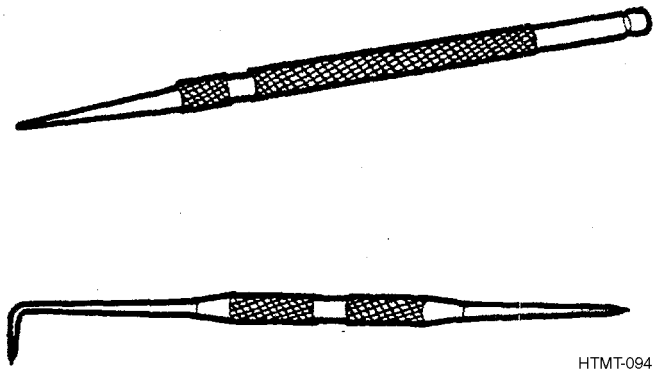

HTMT-094

12.2 TYPES AND USES.

12.2.1 Machinist's Scribers.

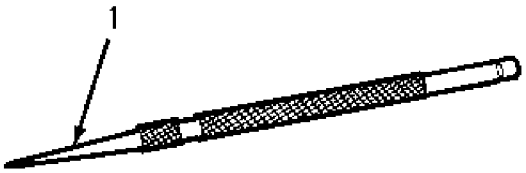

HTMT-095

The machinist's scriber is used to mark or score on steel, glass, aluminum, copper or similar surfaces. There are two basic types of machinist's scribers, single point pocket (1), and bent point-straight point (2).

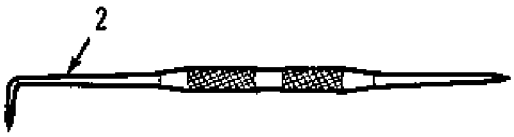

HTMT-096

Tungsten carbide tips have extremely hard points and are used on hardened steel or glass.

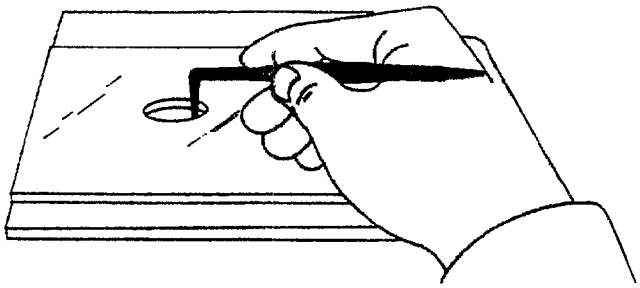

HTMT-097

The bent point is used to scribe through holes or other hard to reach places.

12.3 USING A MACHINIST'S SCRIBER.

NOTE

The following procedure for scribing an alignment mark on a telescope is not the only use of a scriber.

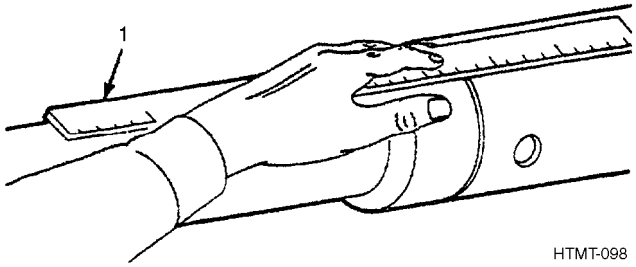

HTMT-098

1. Place material to be marked on a firm surface. Place a steel rule or straight edge (1) on the work beside the line to be scribed.

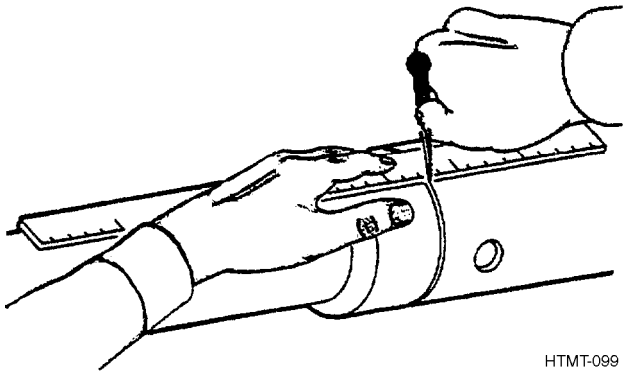

HTMT-099

2. Use finger tips of one hand to hold the straight edge securely. Hold the scriber in your hand as you would a pencil.

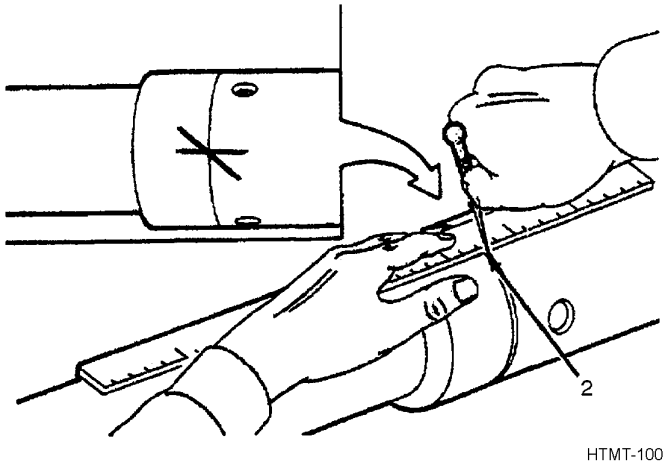

3. Scribe the line by drawing the scriber (2) along the straight edge at a 45 degree angle and tipped in the direction it is being moved.

12.4 CARE OF SCRIBERS.

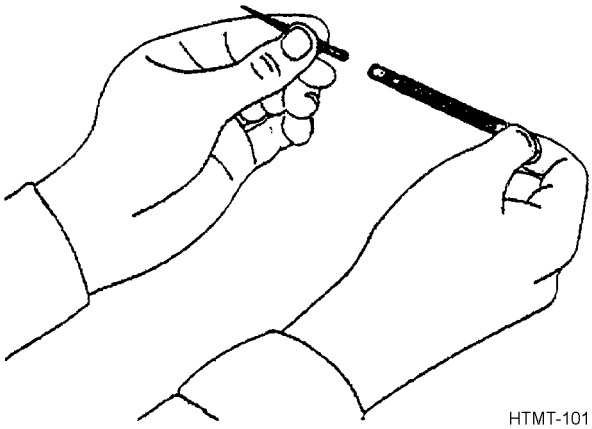

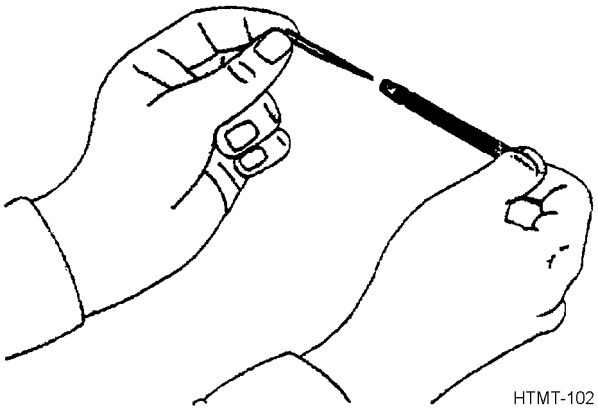

1. Protect points by reversing them in the handle or placing a cork or a piece of soft wood over point. (Optional if tool is secured with foam inlay).

2. As needed, keep the scribers clean and lightly oiled.

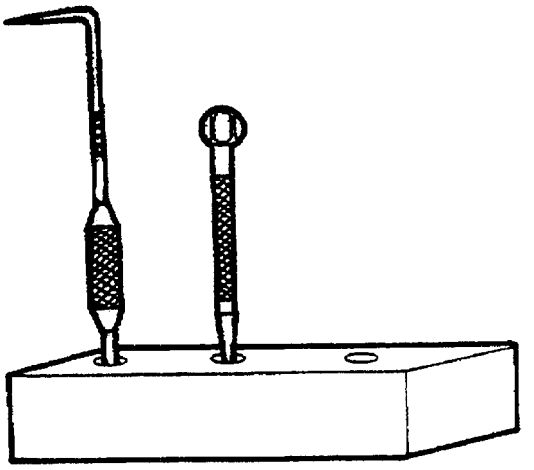

3. Stow on a rack or in a box.

4. Do not use scribers for other than intended purposes.

CHAPTER 13
SQUARES

13.1 HOW TO CHOOSE AND USE THEM.

Types and Uses, Paragraph 13.2, provides you with a list of the types of squares. These pages should help you select the right square for the job. Using Squares, Paragraph 13.3, tells you how to use a square to perform its various functions. Care of Squares, Paragraph 13.8, tells you how to care for squares.

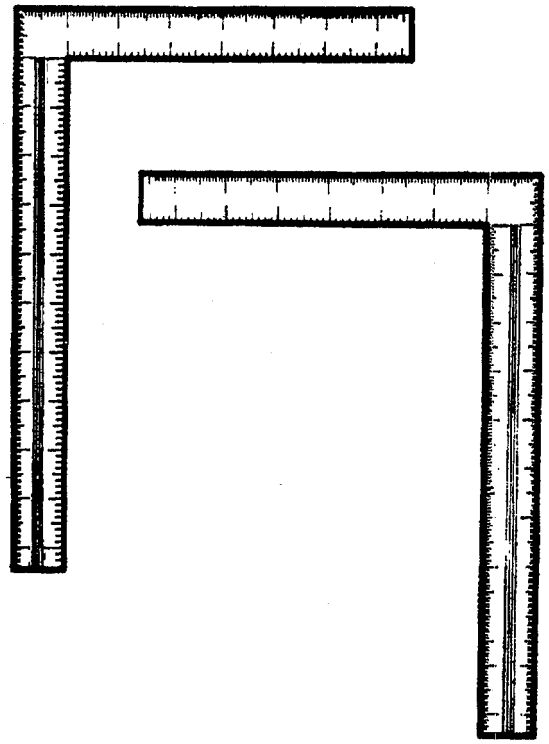

HTMT-104

13.2 TYPES AND USES.

13.2.1 Carpenter's Square.

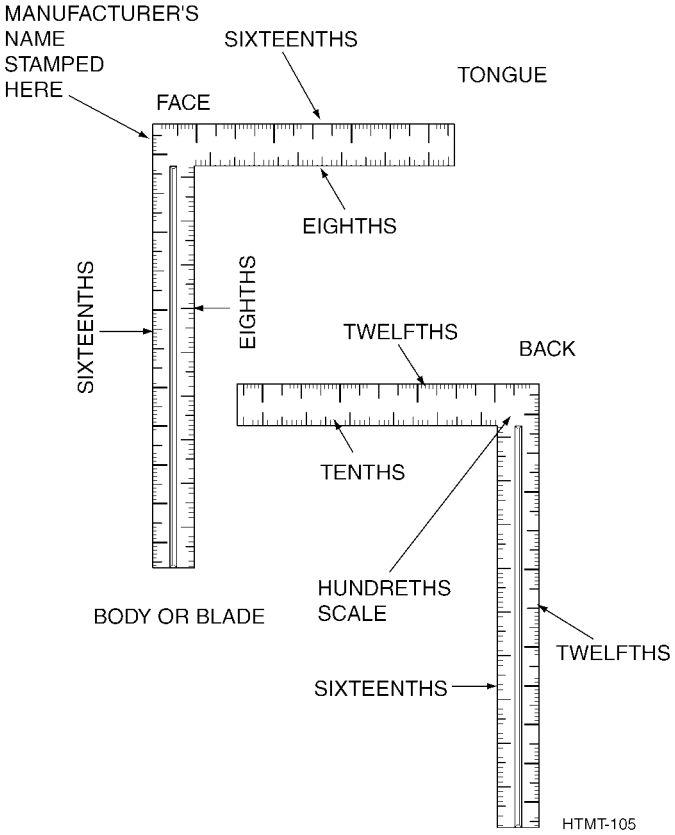

HTMT-105

The carpenter's square is made up of two parts: the body or blade, and the tongue. It has inches divided into eighths, tenths, twelfths, and sixteenths.

The face side contains the manufacturer's name and the inches are divided into eighths and sixteenths as shown. There are two tables down the center.

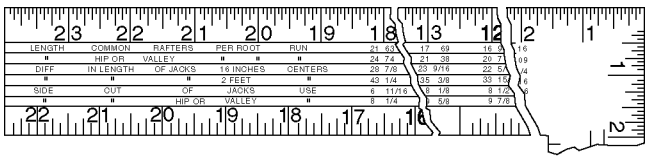

HTMT-106

The rafter table is used for determining the length and cut of rafters.

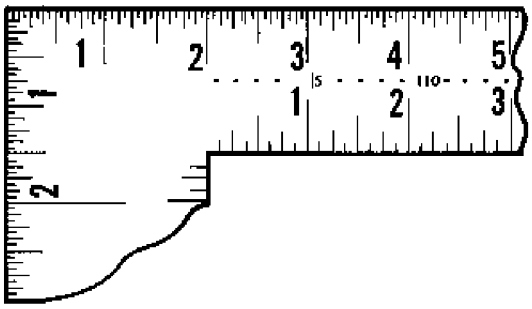

HTMT-107

The octagon or eight square scale is used for cutting an octagon from a square piece of material.

The back side contains the hundredths scale and is divided into tenths, twelfths, and sixteenths as shown. There are two tables down the center.

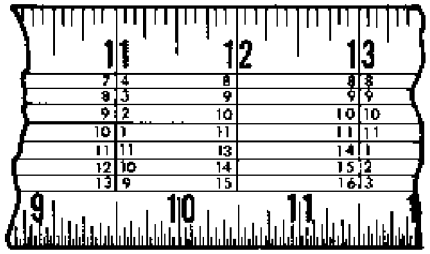

HTMT-108

The essex board measure is used to compute the number of board feet in a given piece of lumber.

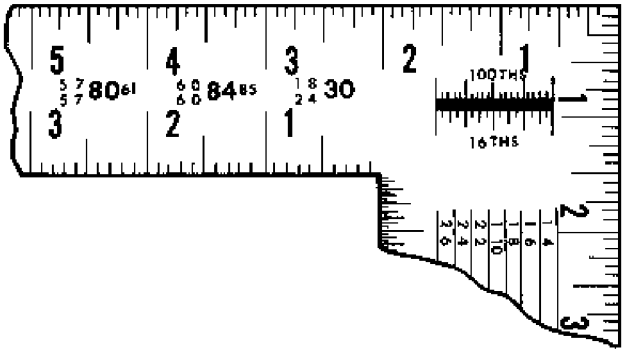

HTMT-109

The brace measure is used to find the exact lengths of common braces.

The following scales or inch divisions are found on the carpenter's square:

Face of body	outside edge	inches and sixteenths
Face of body	inside edge	inches and eighths
Face of tongue	outside edge	inches and sixteenths
Face of tongue	inside edge	inches and eighths
Back of body	outside edge	inches and twelfths
Back of body	inside edge	inches and sixteenths
Back of tongue	outside edge	inches and twelfths
Back of tongue	inside edge	inches and tenths

13.2.2 Try Square.

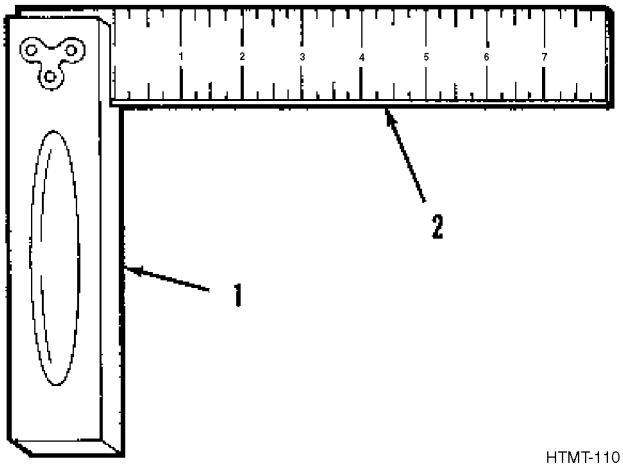

HTMT-110

The try square is made of a steel or wood stock (1) and a blade (2). The blade is from 2 to 12 inches long and is graduated in eighths. The try square is used to set or check lines which are at right angles (90 degrees) to each other.

13.2.3 Combination Square.

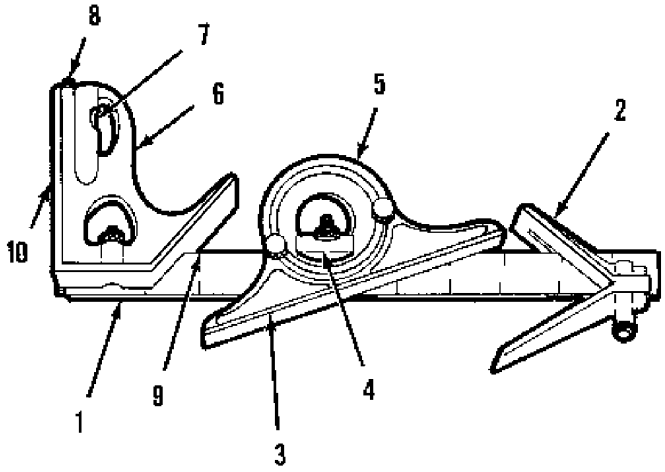

HTMT-111

The combination square is made up of the following components:

1. A slotted 12-inch stainless steel rule (1) which is graduated in eighths, sixteenths, thirty-seconds and sixty-fourths of an inch. It can be used as a measuring scale by itself or with any one of the following components.

2. The center head (2), when attached to the rule, bisects a 90 degree angle. It's used for determining the center of cylindrical work.

3. The protractor (3) has a level (4) and a revolving turret (5) which is graduated in degrees from 0 to 180 or 0 to 90 in either direction. It is used to lay out and measure angles to within one degree.

4. The square head (6) has a level (7), a scribe (8), and 45 degree (9) and 90 degree sides (10). It is used to lay out 45 and 90 degree angles and to check level. It may also be used as a height or depth gage.

13.2.4 Sliding T-Bevel.

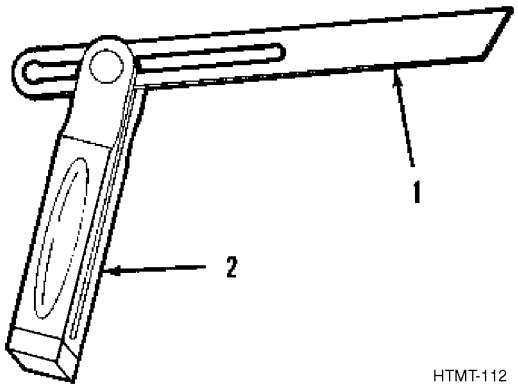

HTMT-112

The sliding T-bevel is made up of a slotted blade (1) and a solid stock (2). The blade is adjustable so it can be set to measure any angle. The T-bevel is used for testing bevels and laying out angles.

13.2.5 Bevel Protractor.

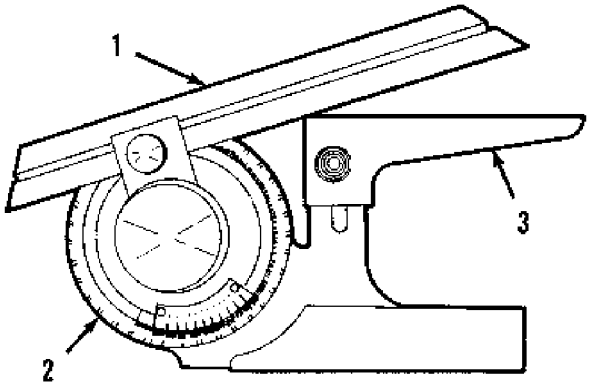

HTMT-113

The bevel protractor is made up of an adjustable blade (1) and a graduated dial (2) which contains a vernier scale. The bevel protractor is used to establish an angle and determine its relationship to other surfaces. The acute angle attachment (3) is used for measuring acute angles accurately.

13.3 USING A CARPENTER'S SQUARE TO MARK A SQUARE LINE.

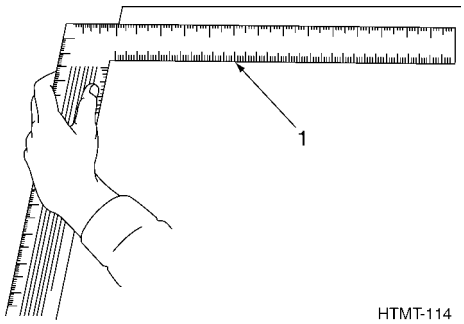

HTMT-114

1. To mark a square line, place the blade or tongue (1) of the square against the side of the material with the square tilted slightly so the blade or tongue of the square extends across the work.

2. Mark a line across the work using a pencil or marking crayon.

13.4 USING A CARPENTER'S SQUARE TO LAY OUT STEPS.

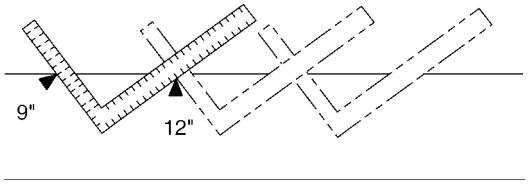

HTMT-115

1. The preceding example shows proper square position when marking cut lines for a series of steps 9” x 12.”

2. Continue the process until desired number of steps has been layed out.

13.5 USING A TRY SQUARE.

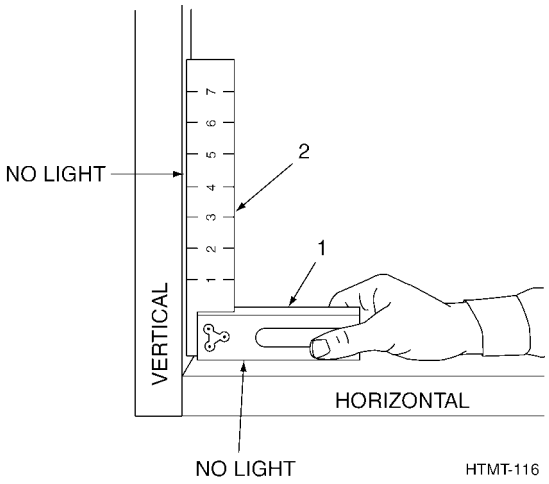

1. To check a square joint, place the stock (1) against a horizontal section and the blade (2) against a vertical section. Light must not be seen around blade edge. If light is seen, the work is not square.

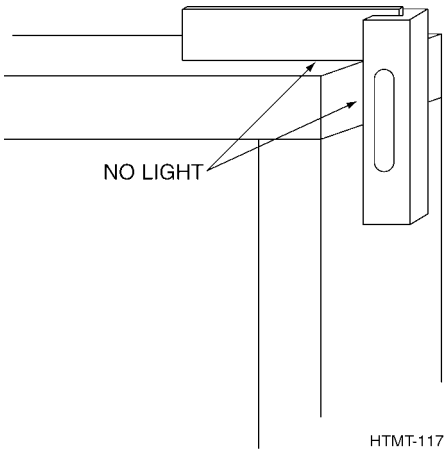

2. To check the end of a board, place stock on vertical edge and extend blade over the end. Light must not be seen around blade edge. If light is seen, the work is not square.

13.6 USING A SLIDING T-BEVEL SQUARE.

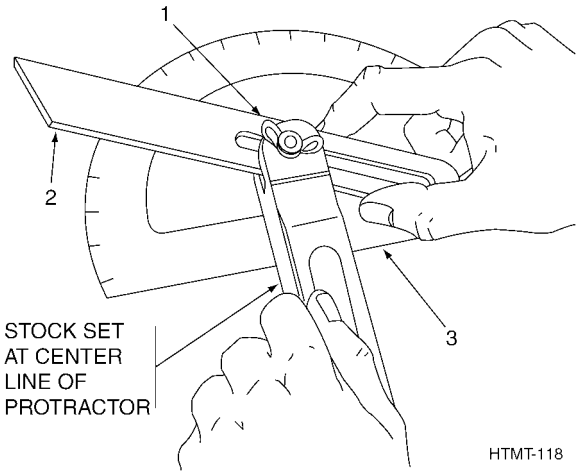

1. Loosen locking nut (1) and adjust blade (2) to measure a desired angle using protractor (3). Tighten locking nut (1).

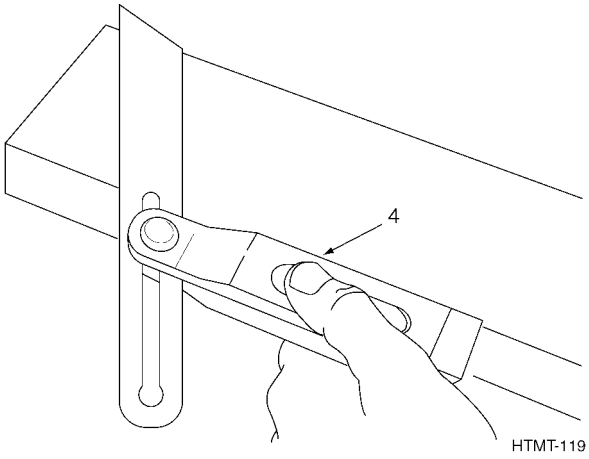

2. The angle may now be laid out by extending the blade across the board with the stock (4) held firmly against the edge.

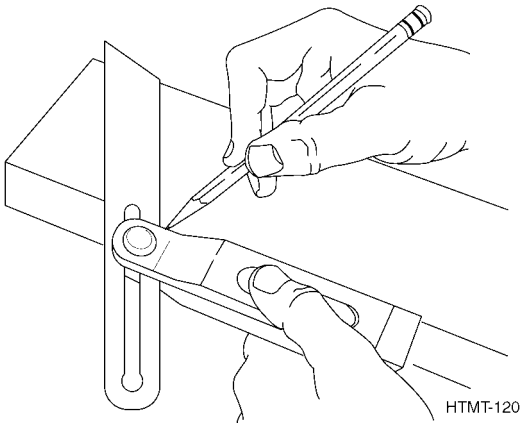

3. Mark with a pencil or marking crayon. Make sure the square does not move while marking.

13.7 USING A COMBINATION SQUARE.

13.7.1 Using as a Center Head to Find the Diameter of a Cylinder:

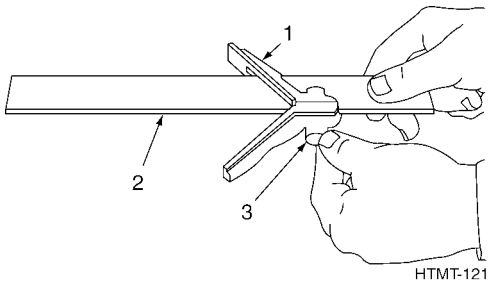

1. Slide center head (1) on rule (2) and fasten by tightening setscrew (3).

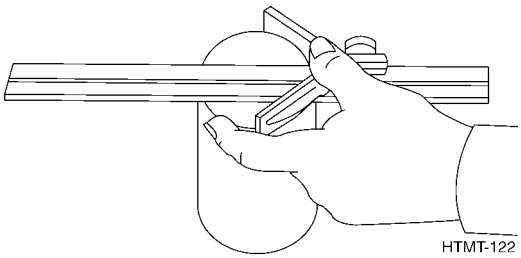

2. Put the center head flush against the cylinder.

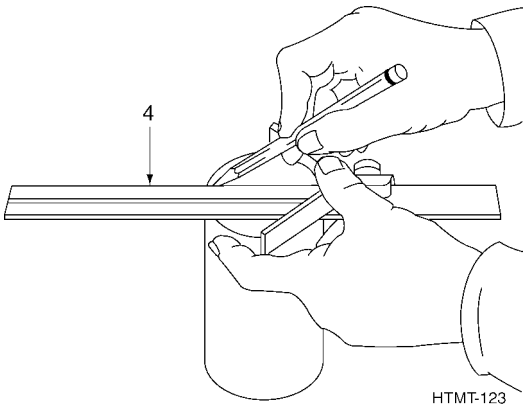

3. Mark the diameter on the cylinder using a pencil or marking crayon by drawing a straight line along the inside edge (4). Make sure the square does not slip while marking.

13.7.2 Using as a Protractor Head to Determine an Angle.

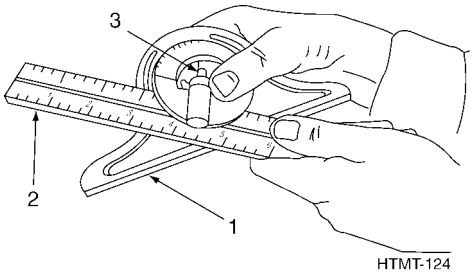

1. Slide protractor head (1) on rule (2) and fasten by tightening setscrew (3).

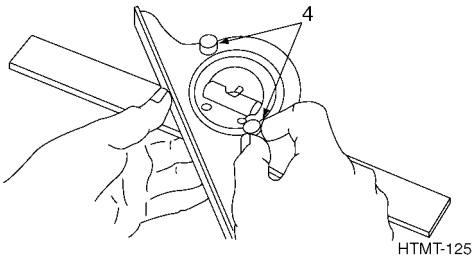

2. Loosen the protractor adjustment screws (4) so the protractor may be pivoted about the rule. Angle being measured is already marked.

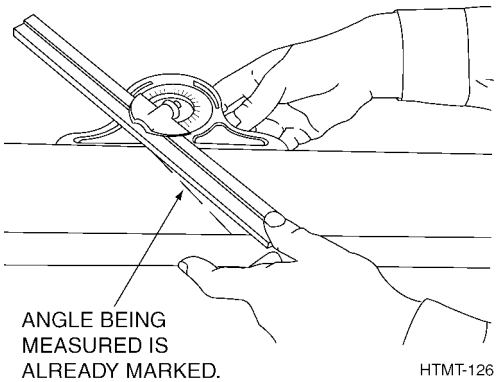

3. Place the rule on the angle being measured and pivot the protractor head against the edge. Tighten adjustment screws.

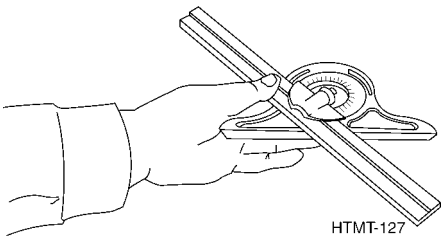

4. Remove and read measured angle on protractor scale.

13.7.3 Using a Combination Square to Determine Depth.

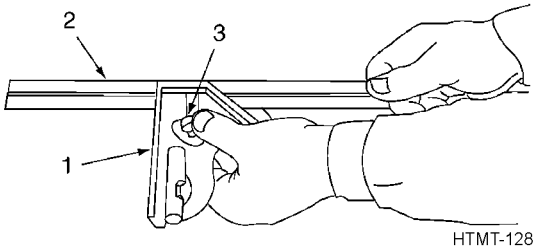

1. Slide square head (1) on rule (2) and fasten by tightening setscrew (3).

2. Loosen setscrew.

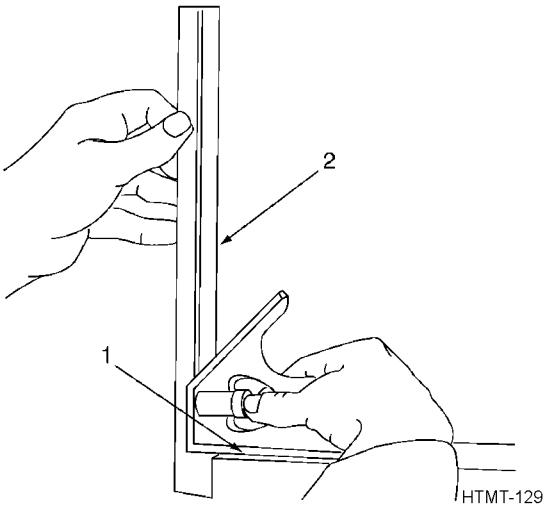

3. Set the flat surface of the square head (1) above the hole and adjust the rule (2) until it hits the bottom.

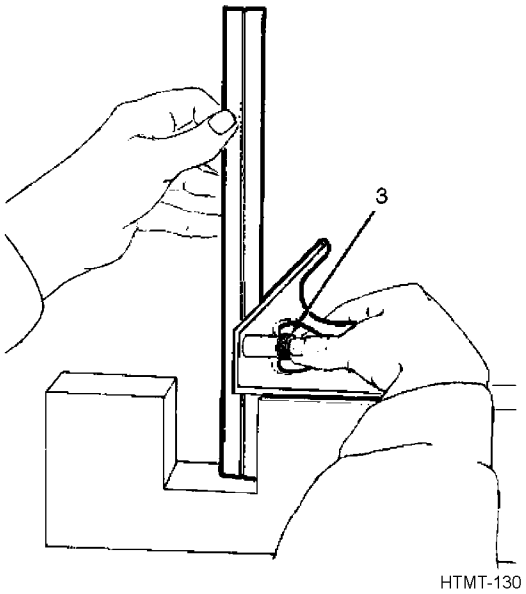

4. Tighten setscrew (3).

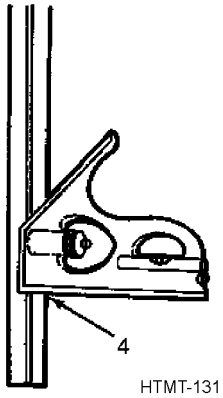

5. Remove the combination square and read the depth at the intersection of the rule and the square head (4).

13.8 CARE OF SQUARES.

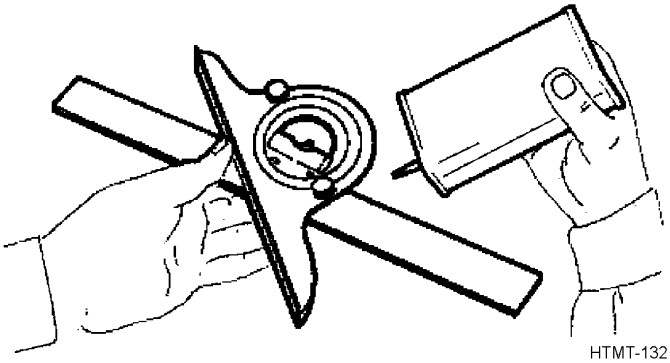

1. Make sure squares are kept clean.

2. As needed, apply a light coat of oil to all metal surfaces after using.

3. A square with a loose stock is no good. Replace the square.

CHAPTER 14
SURFACE, DEPTH, AND HEIGHT GAGES

14.1 HOW TO CHOOSE AND USE THEM.

Types and Uses, Paragraph 14.2, provides you with a list of the types of gages. These pages should help you select the right gage for the job. Using the Surface, Depth, and Height Gages, Paragraph 14.3, tells you how to use the gages for their intended purposes. Care of Surface, Height, and Depth Gages, Paragraph 14.4, tells you how to keep your gages in good condition.

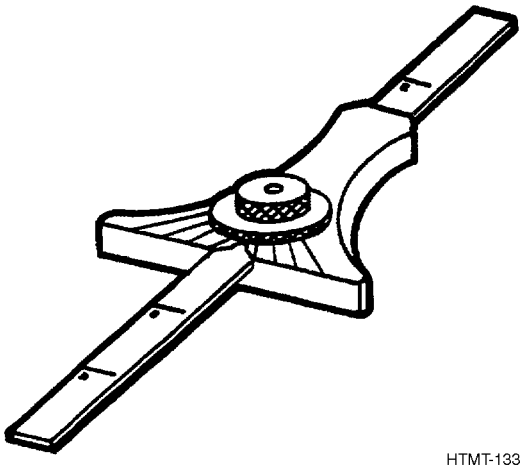

HTMT-133

14.2 TYPES AND USES.

14.2.1 Surface Gage.

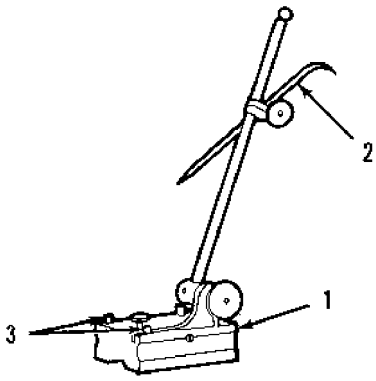

HTMT-134

A surface gage is a measuring tool used to transfer measurements to work by scribing a line, and to indicate the accuracy or parallelism of surfaces. The surface gage consists of a base with an adjustable spindle (1) to which may be clamped a scriber or an indicator (2). Surface gages are made in several sizes and are classified by the length of the spindle. The smallest spindle is 4 inches long, the average 9 to 12 inches, and the largest 18 inches. The scriber is fastened to the spindle with a clamp. The bottom and the front end of the base of the surface gage have deep V-grooves. The grooves allow the gage to measure from a cylindrical surface. The base has two gage pins (3). They are used against the edge of a surface plate or slot to prevent movement or slippage.

14.2.2 Rule Depth Gage.

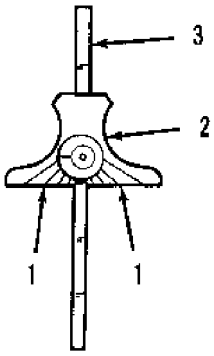

HTMT-135

A rule depth gage measures the depth of holes, slots, counterbores, and recesses. Some rule depth gages, such as the one shown above, can also be used to measure angles. This is done by using the angle marks (1) located on the sliding head (2). The rule depth gage is a graduated rule (3) with a sliding head (2) designed to bridge a hole or slot. The gage holds the rule at a right angle to the surface when taking measurements. This type has a measuring range of 0 to 5 inches. The sliding head has a clamping screw so that it may be clamped in any position. The sliding head is flat and perpendicular to the axis of the rule. It ranges in size from 2 to 2-5/8 inches wide and from 1/8 to 1/4 inch thick.

14.2.3 Micrometer Depth Gage.

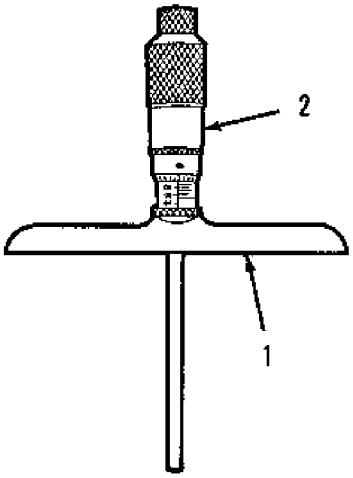

HTMT-136

The micrometer depth gage consists of a flat base (1) that is attached to the barrel of a micrometer head (2). These gages have a range from 0 to 9 inches, depending on the length of extension rod used. The hollow micrometer screw has a 1/2 or 1 inch range. Some are provided with a ratchet stop. The flat base ranges in size from 2 to 6 inches. Several extension rods are supplied with this type gage.

NOTE

For additional information on micrometers, see chapter 7 in this manual.

14.2.4 Vernier Depth Gage.

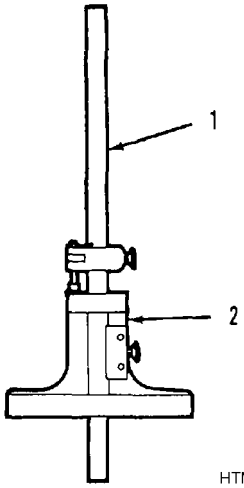

HTMT-137

The vernier depth gage consists of a graduated scale (1) either 6 or 12 inches long. It also has a sliding head (2) similar to the one on the vernier caliper. (See chapter 6, Using Vernier Caliper).

The sliding head is designed to bridge holes and slots. The vernier depth gage has the range of the rule depth gage. It does not have quite the accuracy of a micrometer depth gage. It cannot enter holes less than 1/4 inch in diameter. However, it will enter a 1/32-inch slot. The vernier scale is adjustable and may be adjusted to compensate for wear.

14.2.5 Height Gage.

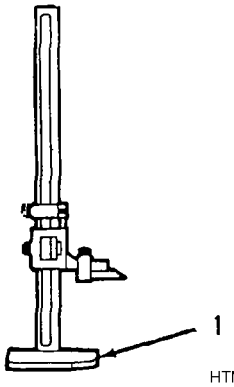

HTMT-138

A height gage is used in the layout of jigs and fixtures. On a bench, it is used to check the location of holes and surfaces. It accurately measures and marks off vertical distances from a plane surface.

The vernier height gage is a caliper with a special base (1) to adapt it for use on a surface plate. Height gages are available in several sizes. Most common are the 10, 18, and 24-inch gages in English measure. The most common metric gages are the 25 and 46-centimeter sizes. Height gages are classified by the dimension they will measure above the surface plate like the vernier caliper (see chapter 6, Reading a Vernier Caliper), height gages are graduated in divisions of 0.025 inch. Its vernier scale is divided into 25 units for reading thousandths of an inch.

14.2.6 Surface Plate.

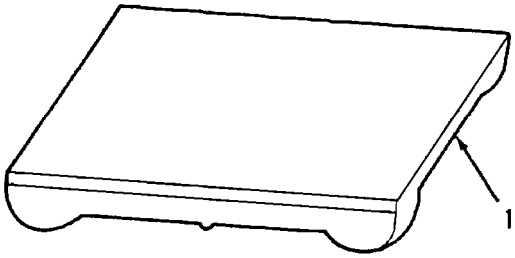

HTMT-139

A surface plate provides a true, smooth, plane surface. It is often used as a level base for surface and height gages from which to make accurate measurements. Surface plates are usually made of close grained cast iron (1), are rectangular in shape, and come in a variety of sizes.

14.3 USING THE SURFACE, DEPTH, AND HEIGHT GAGES.

Below are examples of how each of the gages mentioned in this chapter can be used.

14.3.1 Using a Surface Gage.

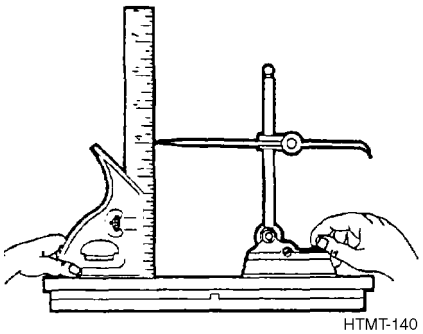

HTMT-140

Setting gage for transfer of 4-inch vertical measurement.

14.3.2 Using a Rule Depth Gage.

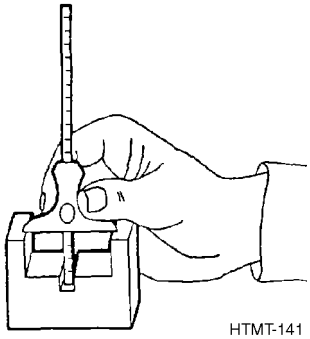

HTMT-141

Measuring the distance from a surface to a recessed point.

14.3.3 Using a Micrometer Depth Gage.

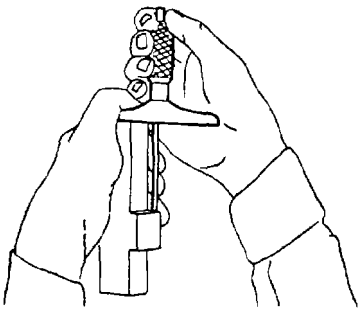

HTMT-142

Measuring projection depth with micrometer precision.

14.3.4 Using a Vernier Depth Gage.

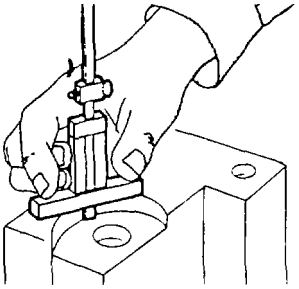

HTMT-143

Measuring hole depth of die from a given surface.

14.3.5 Using a Height Gage.

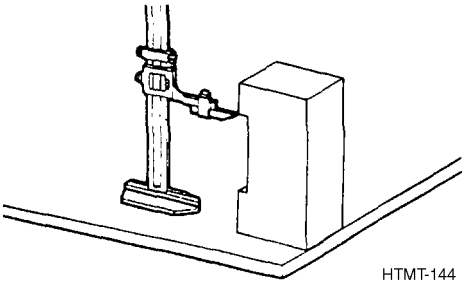

HTMT-144

Measuring vertical distance from a plane surface.

14.4 CARE OF SURFACE, HEIGHT, AND DEPTH GAGES.

1. As needed, coat all metal parts of gages with a light coat of oil to prevent rust.

2. Carefully store gages when not in use. Use separate containers if provided by manufacturer.

3. Keep graduations and markings clean and legible.

4. Do not drop any gage. Small nicks, scratches, and distortions can cause inaccurate measurements.

5. Protect all pointed gage parts from damage.

CHAPTER 15
RING AND SNAP GAGES AND GAGE BLOCKS

15.1 HOW TO CHOOSE AND USE THEM.

Types and Uses, Paragraph 15.2, provides you with a list of the types of gages. These pages should help you select the right gage for the job. Using, Paragraph 15.3, tells you how to use the gages to make a measurement. Care, Paragraph 15.9, tells you how to care for the gages.

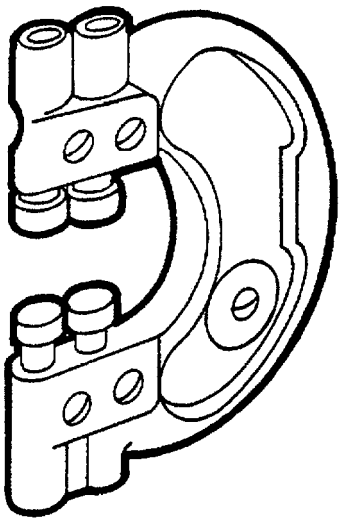

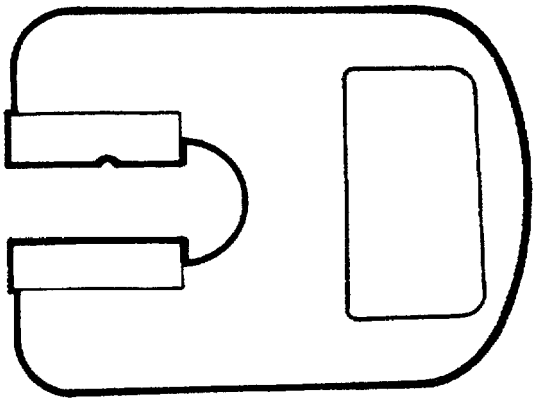

HTMT-145

15.2 TYPES AND USES.

Ring and snap gages and precision gage blocks are used as standards to determine whether or not one or more dimensions of a manufactured post are within specified limits. Their measurements are included in the construction of each gage, and they are called fixed gages. However, some snap gages are adjustable. Gages are used for a wide range of work, from rough machining to the finest tool and die making. The accuracy required of the same type of gage will be different, depending on the use.

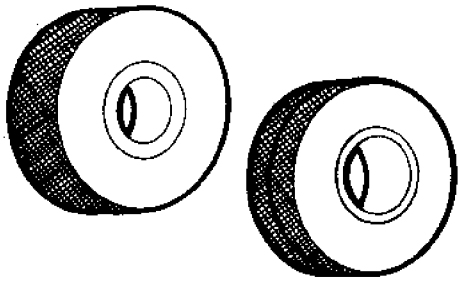

RING GAGES

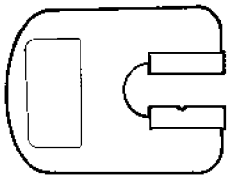

SNAP GAGE NONADJUSTABLE

HTMT-146

The following classes of gages and their limits of accuracy are standard for all makes:

Class X - Precision lapped to close tolerances for many types of masters and the highest quality working and inspection gages.

Class Y - Good lapped finish to slightly increased tolerances for inspection and working gages.

Class Z - Commercial finish (ground and polished, but not fully lapped) for a large percentage of working gages in which tolerances are fairly wide, and where production quantities are not so large.

Class ZZ - (Ring gages only). Ground only to meet the demand for an inexpensive gage, where quantities are small and tolerances liberal.

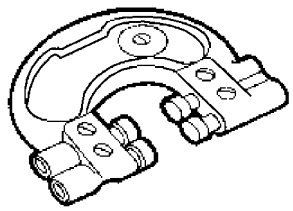

HTMT-147

The table below lists the tolerances for ring gages in each class:

ABOVE	TO AND INCL	X	Y	Z	RING GAGES ZZ
0.029	0.825	0.00004	0.00007	0.00010	0.00020
0.825	1.510	0.00006	0.00009	0.00012	0.00024
1.510	2.510	0.00008	0.00012	0.00016	0.00032
2.510	4.510	0.00010	0.00015	0.00020	0.00040
4.510	6.510	0.00013	0.00019	0.00025	0.00050
6.510	9.010	0.00016	0.00024	0.00032	0.00064
9.010	12.010	0.00020	0.00030	0.00040	0.00080

X Precision lapped
Y Lapped
Z Ground or polished (grinding marks may be in evidence)
ZZ Ground only

15.2.1 Ring Gages.

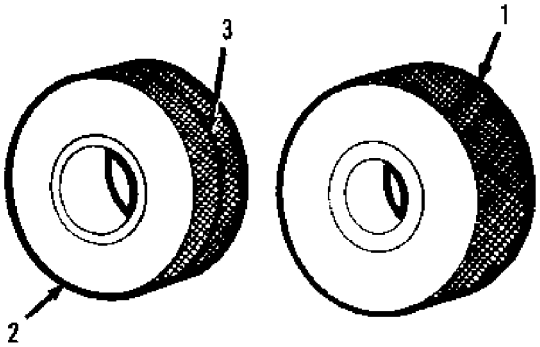

HTMT-148

The plain ring gage is an external gage of circular form. For sizes between 0.059 and 0.510 inch, ring gages are made with a hardened bushing pressed into a soft body. The thickness of the gage will range from 3/16 to 1-5/16 inches. On ring gages, the GO gage (1) is larger than the NO GO gage (2). The GO and NO GO ring gages are separate units. They can be distinguished from each other by an annular groove (3) cut in the knurled outer surface of the NO GO gage. Ring gages made for diameters of 0.510 to 1.510 inches are the same as those shown above, except there is no bushing; they are made all in one piece. Ring gages, sized from 1.510 to 5.510 inches are made with a flange (4). This design reduces the weight, making the larger sizes easier to handle.

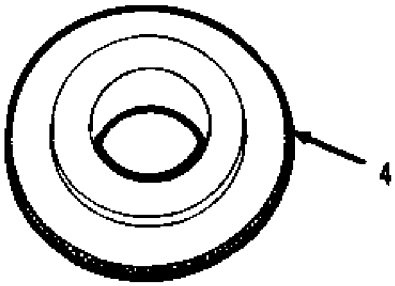

HTMT-149

Ring gages are used more often in the inspection of finished parts than parts in process. The reason for this is that the finished parts are usually readily accessible; whereas, parts in a machine that are supported at both ends would have to be removed to be checked.

15.2.2 Snap Gages.

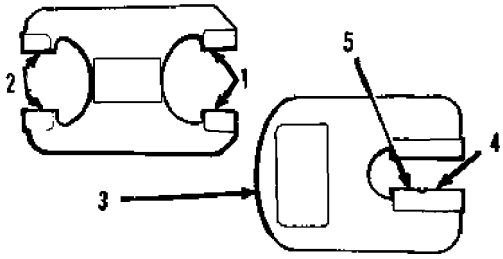

HTMT-150

The plain snap gage is made in two general types, the nonadjustable and adjustable.

The nonadjustable type is a solid construction, having two gaging members, GO (1) and NO GO (2) as shown above. The part to be inspected is first tried on the GO side and then the gage is reversed and the part tried on the NO GO side. Some solid snap gages (3) have combined gaging members in the same set of jaws as shown above, known as a progressive snap gage. The outer member (4) gages the GO dimension and the inner member (5) the NO GO dimension.

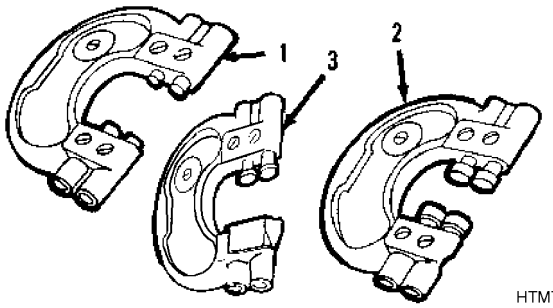

HTMT-151

Three standard designs of the adjustable type are available, consisting of a light, rigid frame with adjustable gaging pins, buttons, or anvils. These pins or buttons may be securely locked in place after adjustment, and locking screws are tightened to hold the gaging dimensions.

One type of adjustable snap gage is made in sizes that range from 1/2 to 12 inches (1). It is equipped with four gaging pins and is suitable for checking the dimension between surfaces. Another type is made in sizes that range from 1/2 to 11-1/4 inches (2). It is equipped with four gaging buttons and is suitable for checking flat or cylindrical work.

The third type is made in sizes from 1/2 to 11-5/8 inches (3). It is equipped with two gaging buttons and a single block anvil, and is especially suitable for checking the diameters of shafts, pins, studs, and hubs.

15.2.3 Gage Blocks.

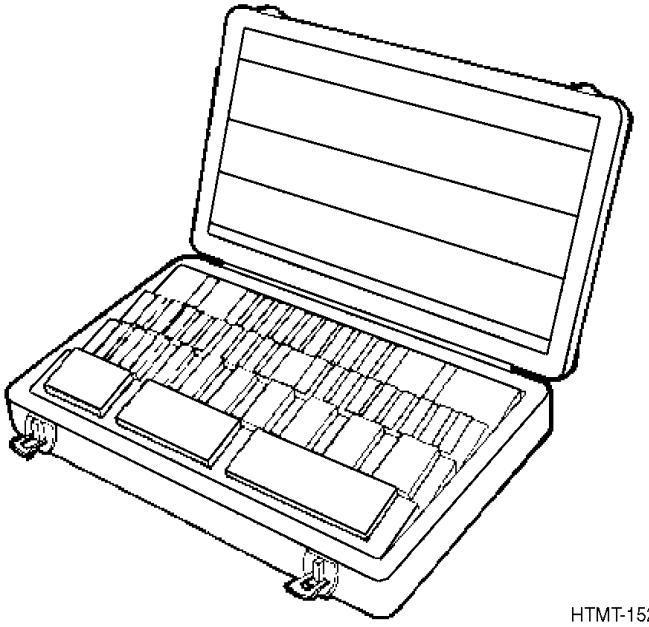

HTMT-152

Gage blocks are available in sets of from 5 to as many as 85 blocks of different dimensions. Precision gage blocks are made from a special alloy steel. They are hardened, ground, and then stabilized over a period of time to reduce subsequent waxing. They are rectangular in shape with measuring surfaces on opposite sides. The measuring surfaces are lapped and polished to an optically flat surface and the distance between them is the measuring dimension. This dimension may range from 0.010 inch up to 20 inches.

15.3 USING A RING GAGE.

To check the shank diameter of a pivot stud.

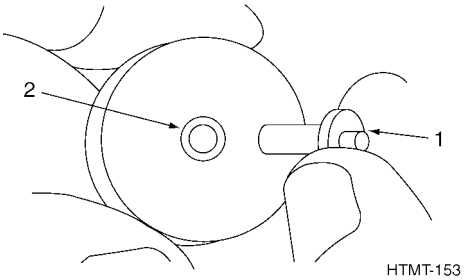

HTMT-153

1. Line the stud (1) up with the hole (2) and press in gently. If the stud will not go in, the shank is too large. If it will go in, the stud is not oversize.

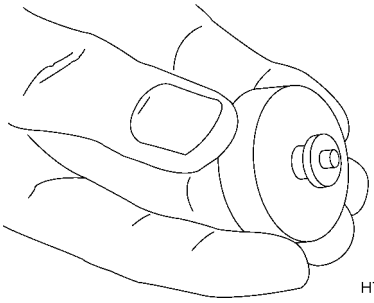

HTMT-154

2. With the stud in the hole, check the piece for taper and out-of-roundness by sensing any wobble.

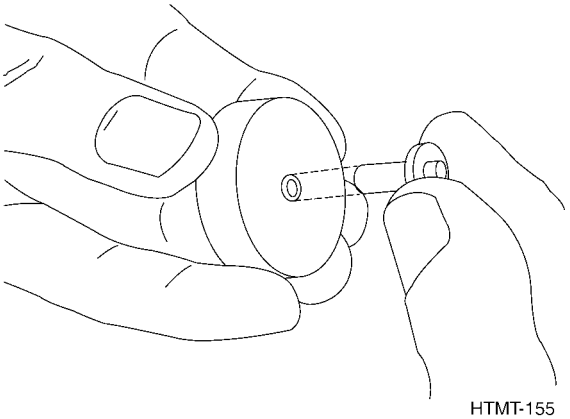

HTMT-155

3. After checking the part in the GO gage, check it in the NO GO gage. The stud must not enter this gage to establish it as being between the desired limits.

NOTE

The GO ring gage controls the maximum dimension of a part and NO GO plug gages control the minimum dimension of a hole. Therefore, GO gages control the tightness of fit of mating parts and NO GO gages control the looseness of fit of mating parts.

15.4 USING AN ADJUSTABLE SNAP GAGE.

Before an adjustable snap gage can be used to check parts, the GO and NO GO buttons, pins, or anvils must be set to the proper dimensions.

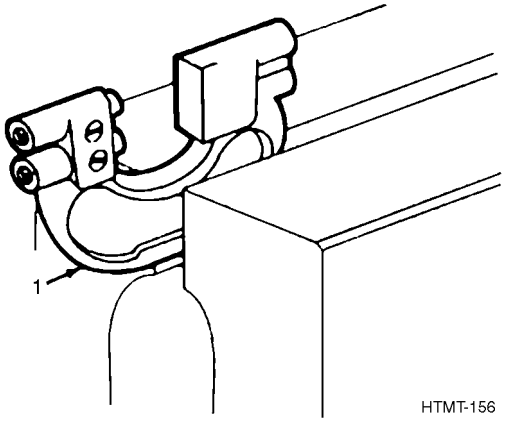

1. The snap (1) gage must first be clamped in a holder.

NOTE

Adjust the "GO" dimension first as shown in the illustration, or if desired, reverse the procedure and adjust the "NO GO" dimension first.

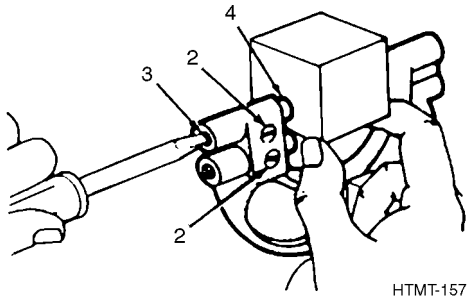

2. Loosen the locking screw (2) and turn the adjusting screws (3) until the dimensions (4) is set.

NOTE

The desired dimension may be taken from a master disk, a precision gage block, or a master plug.

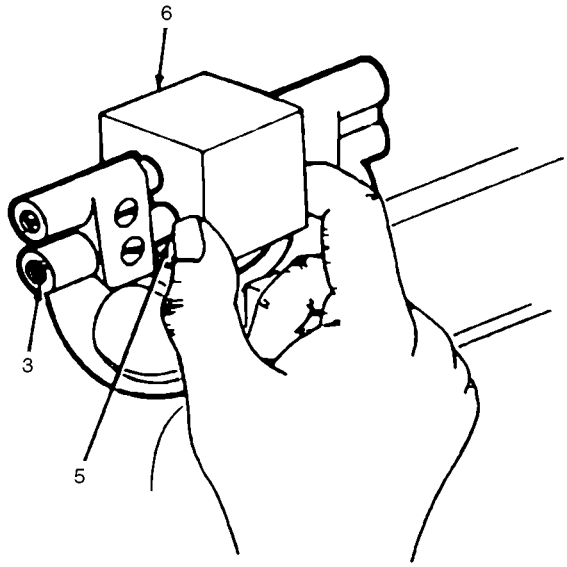

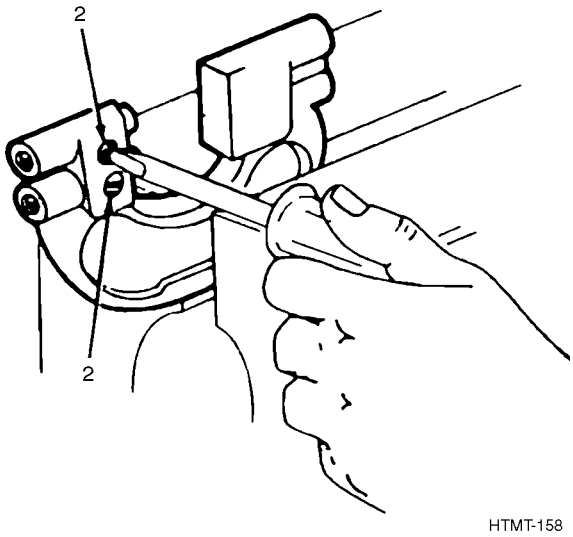

3. Turn the other adjusting screw (3) until the "NO GO" dimension (5) is set.

4. After adjusting for proper dimensions with the master precision piece (6) in place, tighten the locking screws (2).

5. Recheck to make sure the dimensions have not changed before using the gage.

15.5 GAGING FLAT PARTS.

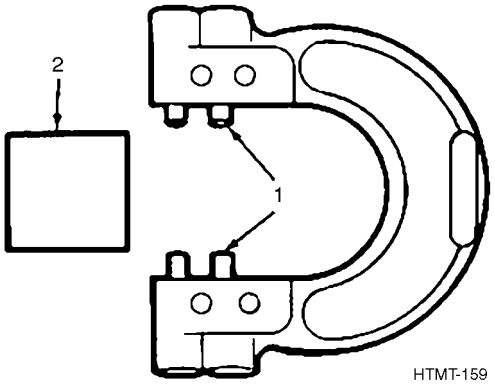

1. Position gage so that the pins or buttons (1) are square with the flat surfaces on the part (2).

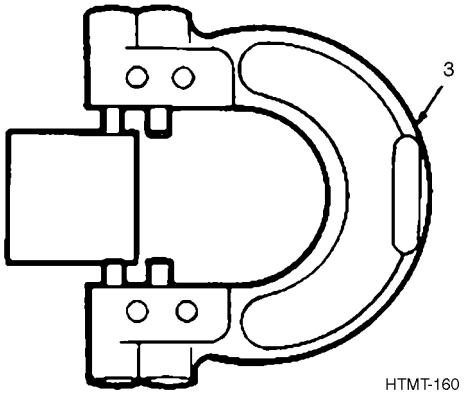

2. Using a slight hand pressure, push the gage (3) over the part.

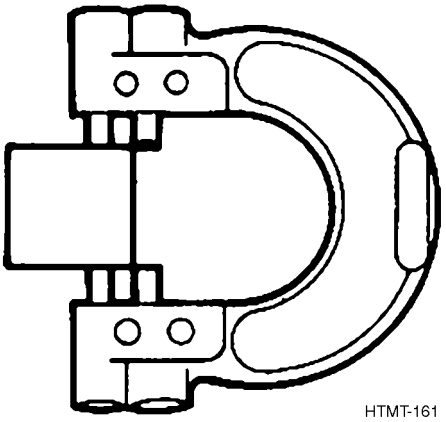

3. If the part is within limits, the NO GO pins will stop the part.

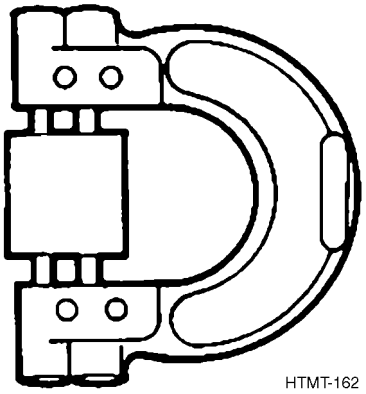

4. If the part is undersize, it will be possible to push it past the NO GO pins.

15.6 GAGING CYLINDRICAL PARTS.

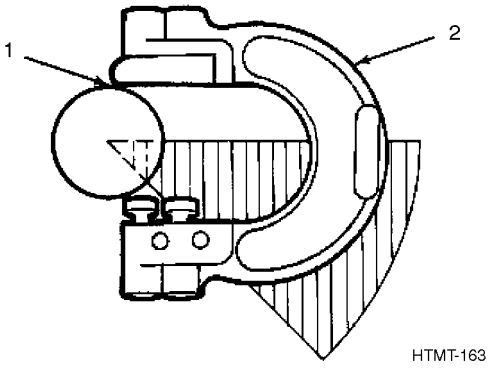

1. Locate the gage on the part with the solid anvil (1) on top. Rock the gage (2) as indicated by the shaded segment above, where the GO dimension is checked.

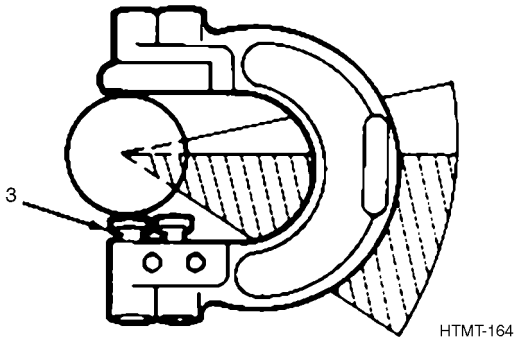

2. If the shaft is not oversized, the first button (3) will pass over it easily.

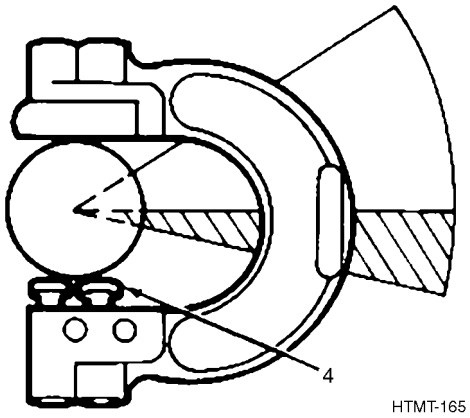

3. Move the gage to the position shown above. If the NO GO button (4) stops the gage, the shaft is within limits.

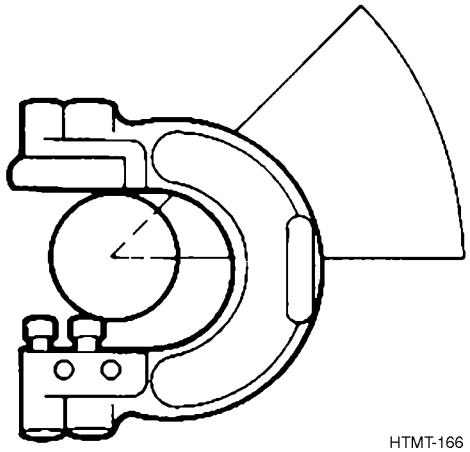

4. If the gage can be rocked further to the position, as shown, the part diameter is too small, since it has passed the NO GO button.

15.7 HOW TO USE PRECISION GAGE BLOCKS.

Before using gage blocks, remove the coat of rust-preventive compound with a chamois or a piece of cleansing tissue or by cleaning with an approved solvent. Gage blocks and any measuring tool used with them must be free of grease, oil, dirt, and other foreign matter to avoid a lapping action whenever the block is moved, and to ensure accurate measurement. When using gage blocks, take particular care when measuring hardened work to avoid scratching the measuring surfaces.

CAUTION

Do not leave blocks wrung together for long periods of time since surfaces in contact will tend to corrode.

NOTE

When building gage blocks (wringing them together) to obtain a desired dimension, care should be exercised to avoid damaging them.

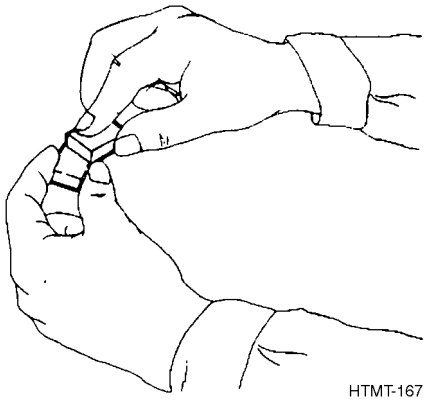

1. Bring the blocks together flat and move them slightly back and forth. This minimizes scratching, as it will detect any foreign particles between the surfaces.

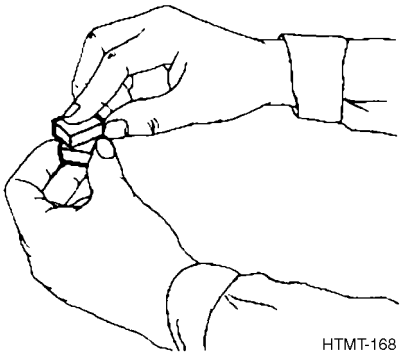

2. Shift the blocks. If the blocks are clean, they will begin to take hold.

3. Slide the two blocks together, using a slight pressure and a rotary motion.

4. Shift gage blocks so that their sides are in line. Any combination of gage blocks may be stacked together in this manner. The combination will be as solid as a single block.

NOTE

- The adhesive force that binds two gage blocks together is a combination of molecular attraction and the suction cup action due to the film of oil or moisture on the surfaces wrung together.

- Separate gage blocks by sliding them apart, using the same movement as when wringing them together.

15.8 FACTORS TO CONSIDER WHEN USING GAGE BLOCKS.

Ordinary changes in temperature have a sizable effect on measurements made with precision gage blocks. The standard measuring temperature is 68°F, which is just a little lower than the average temperature in most shops. Since the room temperature affects the work as well as the block, the expansion in the work will be matched in most cases by a similar expansion in the block. The coefficient of linear expansion of several metals and blocks is listed below:

Material	Millionths of an inch
Steel	5.5 to 7.2 per degree F
Iron	5.5 to 6.7
Phosphor bronze	9.3
Aluminum	12.8
Copper	9.4
Gage blocks	6.36 to 7.0

Handle blocks only when they must be moved and hold them between the tips of your fingers so that the area of contact is small. Hold them for short periods of time only.

NOTE

Avoid conducting body heat into the block by careless handling. Body heat may raise the temperature of the block, causing a serious error in a measurement, particularly if a long stack of blocks is being handled.

When using gage blocks consider the source of error resulting from temperature. Metals other than iron and steel (such as aluminum) have a much different coefficient of linear expansion which will result in a difference between the room temperature measurement and the standard measuring temperature measurement. Careless handling of gage blocks may produce an error of several millionths of an inch and this error increases proportionally with the dimension of the block.

The temperature of the work may be either lower or higher than the room temperature as a result of a machining operation and this difference may be sufficient to cause a sizable error.

Theoretically, the measuring pressure should increase proportionally with the area of contact. For practical purposes, it is better to use a standard measuring pressure. The most commonly used pressure is 1/2 to 2 pounds.

Gage blocks are used in the layout and in checking the accuracy of tools, dies, and fixtures. They are also used in machine setups and in checking parts in process of manufacture and finished parts.

Gage blocks are commonly used in setting adjustable instruments and indicating gages and verifying inspection gages. Gage blocks are used to verify the accuracy and wear of ring and snap gages and many other special-purpose gages. The classification of blocks depends largely on the accuracy required. Typical classification is shown on the following page.

Class	Work	Error range millionths of an inch
I	Verifying gages, setting instruments, and tool inspection.	5 to 20
II	Layout of jigs, fixtures and dies, setting instruments, and tool inspection.	20 to 40
III	Setup of grinding, milling and drill machines, and parts inspection.	40 to 100

15.9 CARE OF RING AND SNAP GAGES.

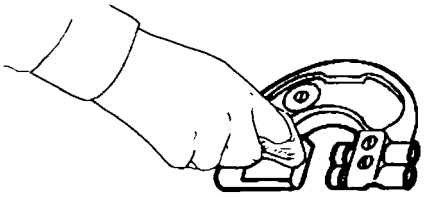

1. Always make certain that the surfaces of the parts gaged and the gage itself are kept free from abrasives, dirt, grit, chips, and all foreign matter.

2. Always consider the abrasive action of the part on the gage. Cast iron, steel, and cast aluminum are more abrasive than brass, bronze, and nonmetals such as plastics. Use particular care when gaging cast iron, steel, and cast aluminum.

3. When gages are stored, arrange them neatly in a drawer or case so that they do not contact other tools or each other.

4. Always hold the gages in your hands when checking. Never clamp them in a vise.

5. At frequent intervals, check all gages for accuracy and wear with gage blocks or master gages.

15.10 CARE OF GAGE BLOCKS.

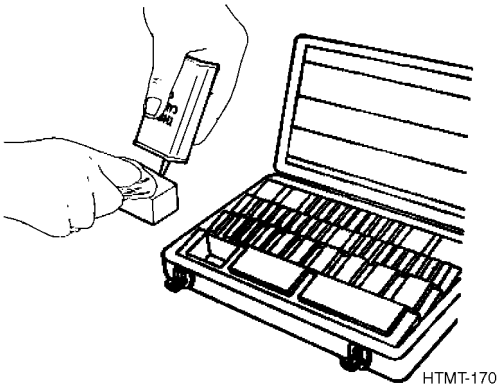

1. Observe particular care when using gage blocks to measure hardened work. The danger of scratching is increased when the work is as hard as the block, or harder.

2. Never touch the measuring surfaces of blocks any more than necessary. The moisture from your hands contains an acid which, if not removed, will eventually stain the blocks.

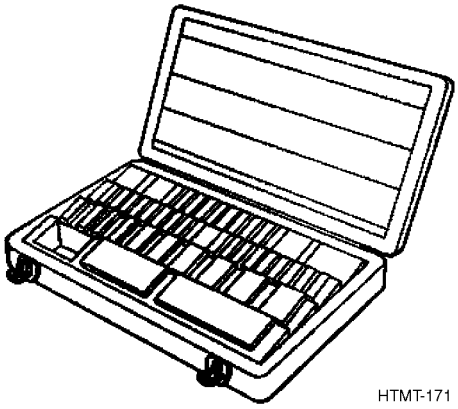

3. Before using blocks, ensure there is no grease, oil, dirt, or any foreign substances on block.

4. Every time a set of blocks is used, all the blocks which have been cleaned for use must be covered with a film of acid-free oil, such as boiled petrolatum, before they are put away. Wipe them with an oiled chamois as you return the blocks to their places in the case.

CHAPTER 16
MISCELLANEOUS MEASURING GAGES

16.1 HOW TO CHOOSE AND USE THEM.

Types and Uses, Paragraph 16.2, provides you with a list of miscellaneous measuring gages. These pages should help you select the right gage for the job. Using, Paragraph 16.3, tells you how to use the miscellaneous measuring gages to perform the measuring operation. Care of Gages, Paragraph 16.14, procedures tell you how to care for the gages.

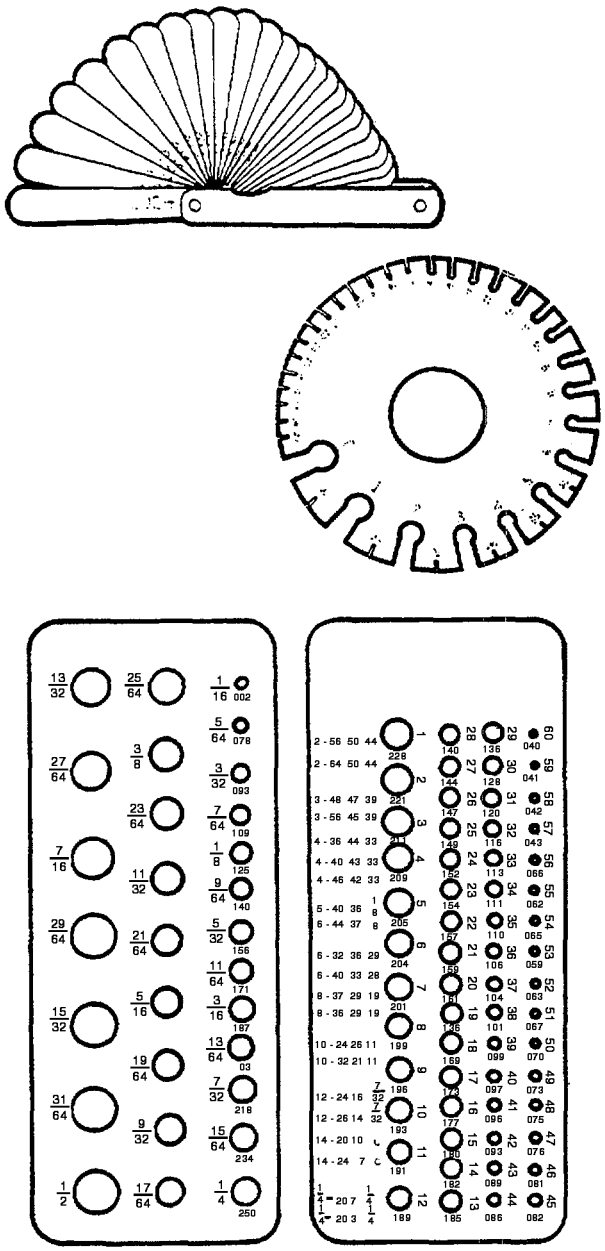

HTMT-172

16.2 TYPES AND USES.

16.2.1 Thickness (Feeler) Gages.

HTMT-173

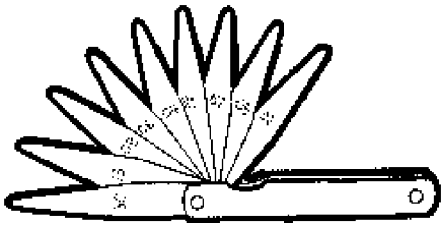

HTMT-174

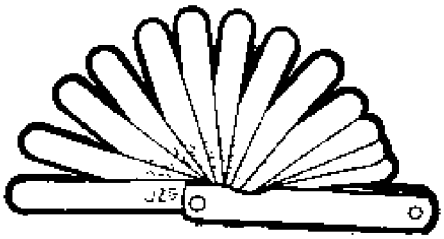

HTMT-175

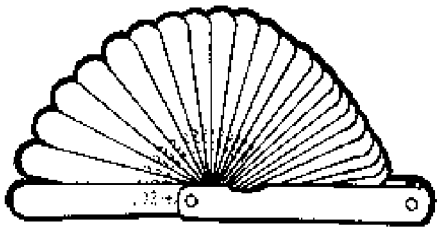

HTMT-176

Thickness (feeler) gages are made in many shapes and sizes; usually 2 to 26 blades are grouped into one tool and graduated in thousandths of an inch.

Most thickness blades are straight, while others are bent at the end at 45 degree and 90 degree angles. Some thickness gages are grouped so that there are several short and several long blades together. Thickness gages are also available in single blades and in strip form for specific measurements. For convenience, many groups of thickness gages are equipped with a locking screw in the case that locks the blade to be used in the extended position.

These gages are fixed in leaf form, which permits the checking and measuring of small openings such as contact points, narrow slots, and so forth. They are widely used to check the flatness of parts in straightening and grinding operations and in squaring objects with a try square.

16.2.2 Center Gage.

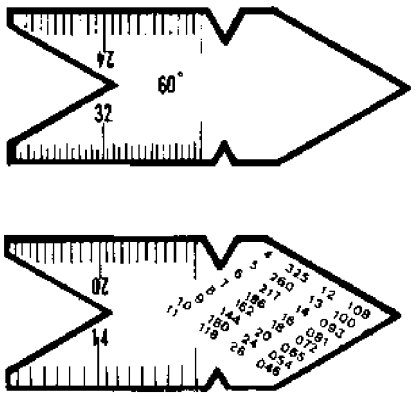

HTMT-177

The center gage is graduated in 14ths, 20ths, 24ths, and 32nds of an inch. The back of the center gage has a table giving the double depth of thread in thousandths of an inch for each pitch. This information is useful in determining the size of tap drills. Sixty-degree angles in the shape of the gage are used for checking Unified and American threads as well as for older American National or U.S. Standard threads and for checking thread cutting tools.

16.2.3 Screw Pitch Gages.

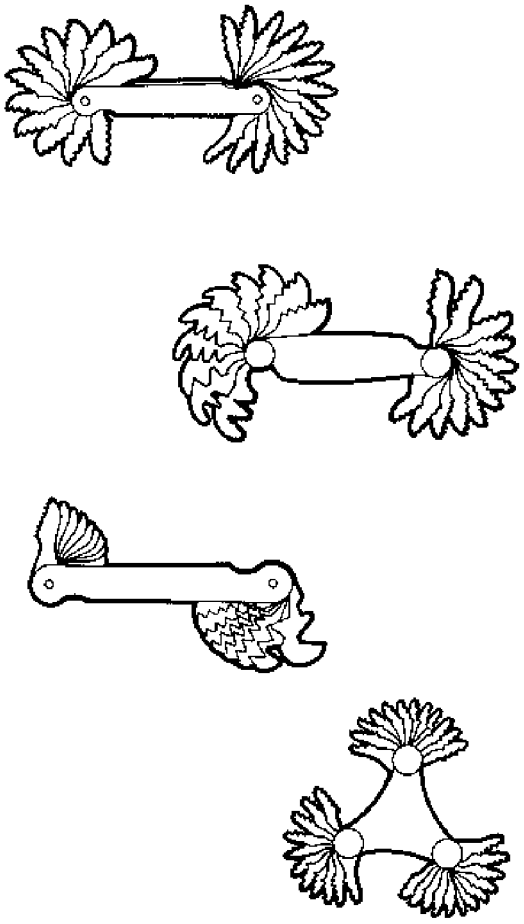

HTMT-178

Screw pitch gages are made for checking the pitch of U.S. Standard, Metric, National Form, V-form, and Whitworth cut threads. These gages are grouped in a case or handle, as are the thickness gages. The number of threads per inch is stamped on each blade. Some types are equipped with blade locks. The triangular-shaped gage has 51 blades covering a wide range of pitches, including 11-1/2 and 27 threads-per-inch for V-form threads.

Screw pitch gages are used to determine the pitch of an unknown thread. The pitch of a screw thread is the distance between the center of one tooth to the center of the next tooth.

16.2.4 Small Hole Gage Set.

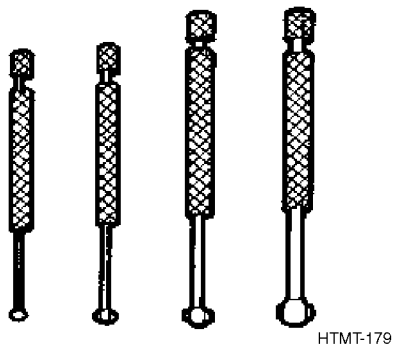

Small hole gages are adjustable, having a rounded measuring member. A knurled screw in the end of the handle is turned to expand the ball-shaped end in small holes and recesses. A micrometer caliper is used to measure the ball end. Maximum measuring capacity is 1/2 inch. This set of 4 or more gages is used to check dimensions of small holes, slots, grooves, and so forth from approximately 1/8 to 1/2 inch in diameter.

16.2.5 Telescoping Gages.

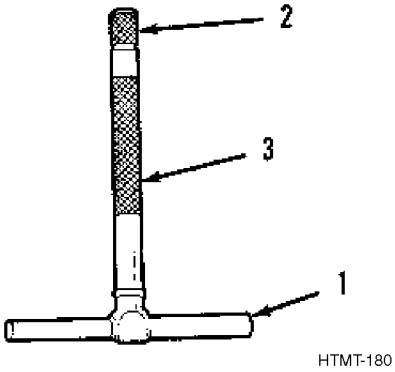

Telescoping gages are used to gage larger holes and to measure inside distances. These gages are equipped with a plunger (1) that can be locked in the measuring position by a knurled screw (2) in the end of the handle (3). Maximum measuring capacity is 6 inches. Measurements must be calipered on the gage by a micrometer, as in the case of the small hole gages.

They are also used when measurements cannot be taken with a standard micrometer. Telescoping gages are particularly adaptable for roughly bored work and odd sizes and shapes of holes. Compress the plungers and lock them by turning handle screw.

16.2.6 Threaded Cutting Tool Gages.

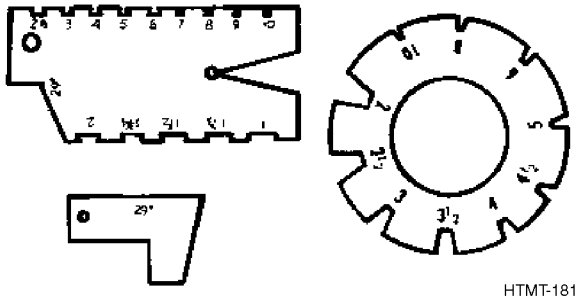

Thread cutting tool gages are hardened steel plates with cutouts around the perimeter. Each cutout is marked with a number that represents the number of threads per inch.

These gages provide a standard for thread cutting tools. They have an enclosed angle of 29 degrees and include a 29 degree setting tool. One gage furnishes the correct form for square threads and the other for Acme standard threads.

16.2.7 Fillet and Radius Gages.

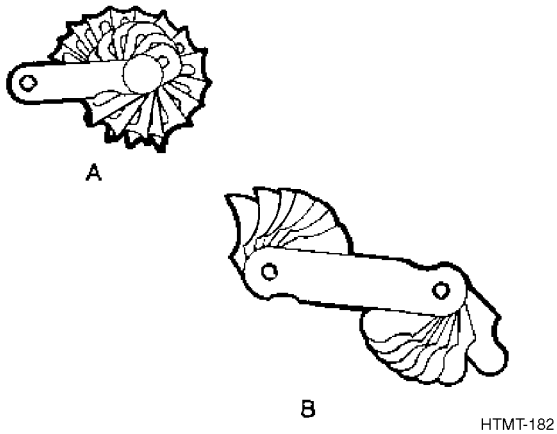

The blades of fillet and radius gages are made of hard-rolled steel. The double-ended blades of the gage have a lock which holds the blades in position. The inside and outside radii are on one blade on gage (A). The other gage (B) has separate blades for inside and outside measurements. Each blade of each gage is marked in 64ths. Each gage has 16 blades.

16.2.8 Drill Point Gage.

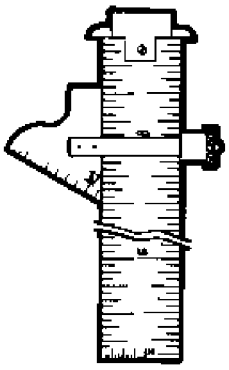

HTMT-183

The drill point gage consists of a 6-inch hook rule with a 59 degree sliding head that slides up and down the rule. The sliding head can be locked at any position on the rule and is graduated in 1/32 inch. This gage is used to check the accuracy of drill cutting edges after grinding. It is also equipped with a 6-inch hook rule. This tool can be used as a drill point gage, hook rule, plain rule, and a slide caliper for taking outside measurements.

16.2.9 Wire Gages.

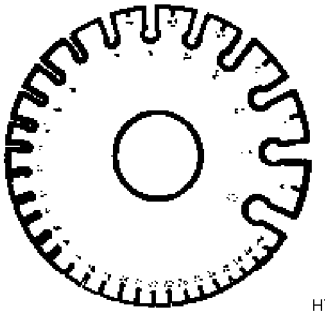

HTMT-184

A wire gage is circular in shape with cutouts in the outside edge. Each cutout gages a different size wire, from 0 to 36 of the English Standard Wire Gage. A separate gage is used for American standard wire and another for U.S. Standard sheet and plate iron, and steel.

Similar gages are also used to check the size of hot and cold rolled steel, sheet and plate iron, and music wire.

16.2.10 Drill Gages.

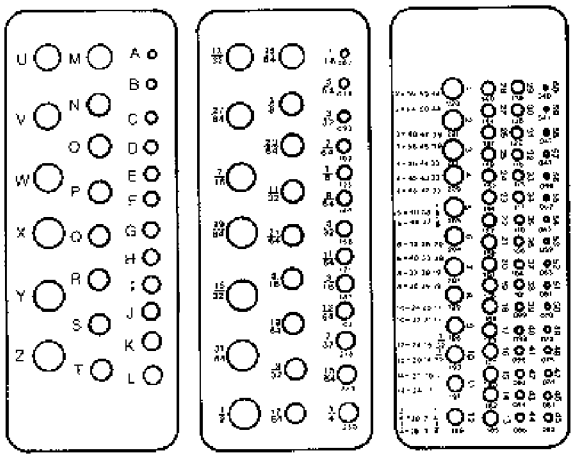

HTMT-185

The twist drill and drill rod gage has a series of holes with size and decimal equivalents stamped adjacent to each hole. One gage measures drill sizes Nos. 1 to 60; the other gage measures drill sizes 1/16 to 1/2 inch in 1/64 inch intervals. Drill gages determine the size of a drill and indicate the correct size of drill to use for given tap size. Drill number and decimal size are also shown in this type gage. Letter size drill gages are also available. Each drill hole is identified by a letter instead of a number, decimal, or fraction.

16.2.11 Marking Gages.

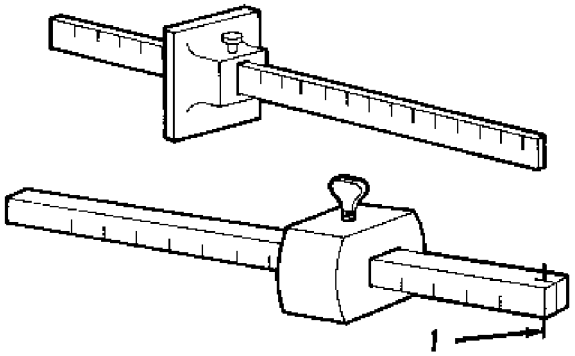

HTMT-186

Marking gages are made of wood or steel. They consist of a graduated beam about 8 inches long on which a head slides. The head can be fastened at any point on the beam with a thumbscrew. The thumbscrew presses a brass shoe tightly against the beam and locks it firmly in position. A steel pin or spur (1) marks the wood and projects from the beam about 1/16 inch.

A marking gage is used to mark off guidelines parallel to an edge, end, or surface of a piece of wood. It has a sharp spur or pin which does the marking. A marking gage must be adjusted by setting the head the desired distance from the spur.

16.3 USING A THICKNESS GAGE.

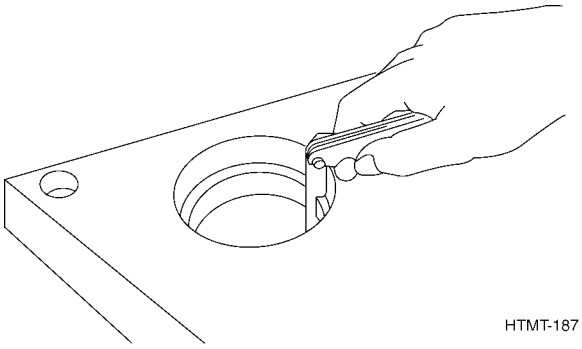

Thickness (feeler) gages are used in one of two ways: as a means for determining a measure or a means for adjusting to a definite limit. A thickness gage is used to check piston ring gap clearance in a cylinder bore.

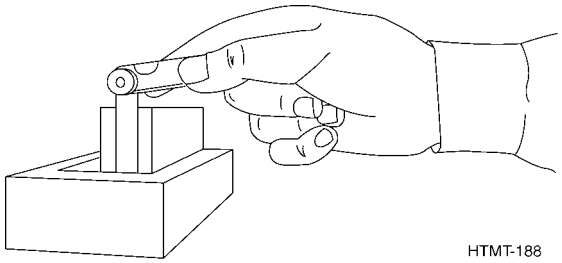

A long blade thickness gage is used to determine the fit between large mating surfaces. By combining blades it is possible to obtain a wide variation of thickness.

16.4 USING A CENTER GAGE.

The center gage is used to set thread cutting tools. Four scales on the gage are used for determining the number of threads per inch. The gage is also used to check cut threads and the scales are used to measure threads per inch.

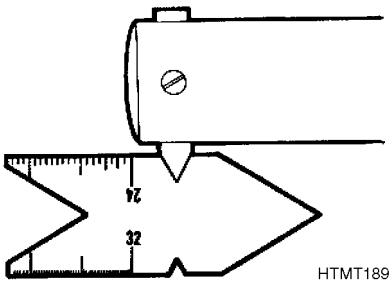

16.5 USING A SCREW PITCH GAGE.

If the pitch of a thread is not known, it can be determined by comparing it with the standards on the various screw pitch gages.

1. Place a blade of a gage (1) over the threads (2), and check to see whether it meshes; if not, successively check each blade of the gage against the thread until it meshes.

2. The pitch can be read off the correct blade. The blades are made pointed so that they can be inserted in small nuts to check inside threads as well as outside threads.

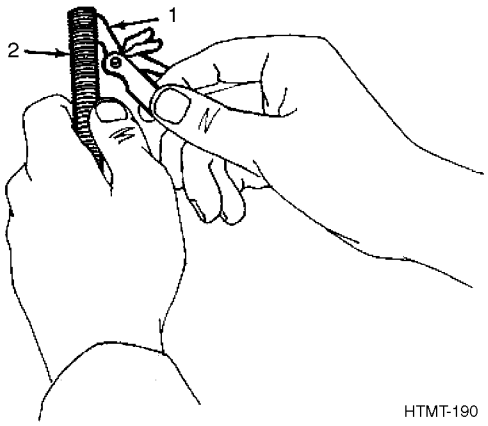

16.6 USING A SMALL HOLE GAGE.

The small hole gages perform the same function as telescoping gages, except that they are used in smaller work.

1. Fit the ball-shaped point (1) into the hole or slot (2).

2. Expand the ball-shaped end by turning the screw (3) at the end of the handle.

3. Use micrometer to gage the measurement.

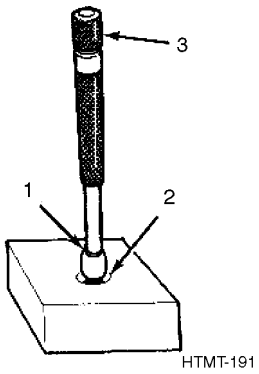

16.7 USING A TELESCOPING GAGE.

1. Loosen the knurled nut (1) at the end of the handle (2).

2. Slightly tilt telescoping gage (3) 5 to 10 degrees and lower into object to be measured.

3. Tighten knurled nut (1).

4. Remove gage by pulling across center line as indicated by arrow.

NOTE

Take measurement only once. Repeated attempts will produce an inaccurate reading.

5. Measure gage setting with an outside micrometer. (To use an outside micrometer, refer to chapter 7 in this manual.)

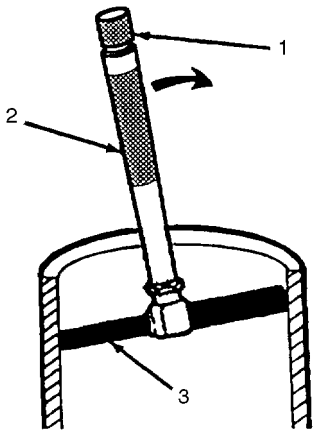

HTMT-192

16.8 USING A THREAD CUTTING TOOL GAGE.

1. Place the proper gage (1) over the tool (2). The tool must mesh properly with no light showing between the tool and the gage.

2. Use a 29 degree angle as a guide when grinding cutting tool.

3. After tool fits the angle, the point should be ground off to fit the proper place on the gage for the particular number of threads per inch to be cut.

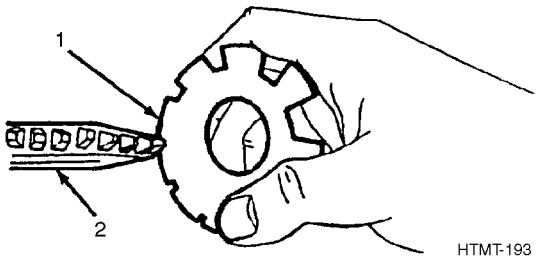

HTMT-193

16.9 USING A FILLET AND RADIUS GAGE.

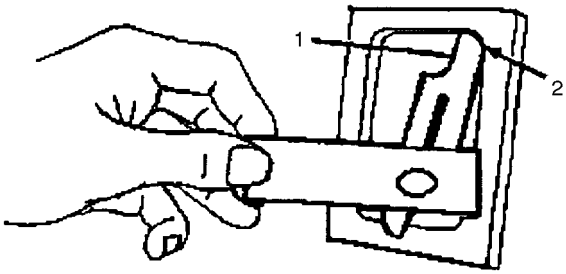

HTMT-194

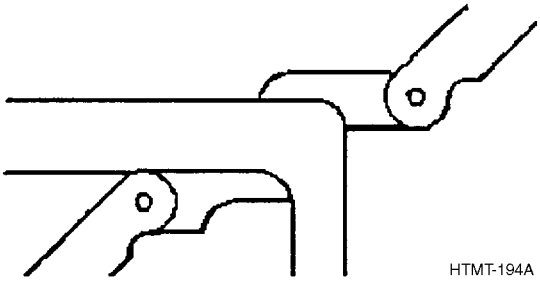
HTMT-194A

1. A double-ended radius gage blade (1) is used to check the inside corner or fillet (2) of a machined part. Each blade can be locked in position by tightening the clamp.

2. These gages can be used in any position and at any angle for both inside and outside radii.

16.10 USING A DRILL POINT GAGE.

The method for sharpening the cutting edges of a drill is to do one lip at a time. Each lip must have the same length and have the same angle in relation to the axis of the drill. Set the sliding head securely on the rule at the mark equal to the length of the drill. Place the drill vertically against the rule so that the drill lip contacts the 59 degree angle of the sliding head. Hold up to light; correct angle is obtained when no light is seen between gage and drill.

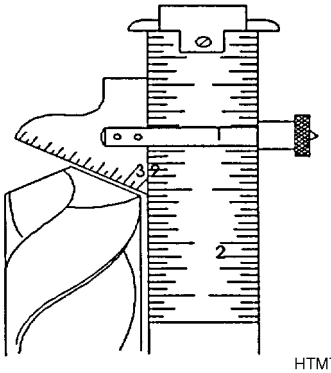

HTMT-195

16.11 USING A WIRE GAGE.

Determine the size of both sheet stock and wire by using a correct sheet and plate or wire gage.

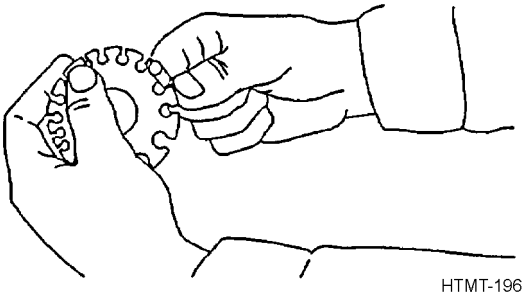

16.12 USING A DRILL GAGE.

The drill gage is used to determine the size of a drill. The drill size, number and decimal size or letter size are stamped on the gage beside each hole. A chart on the gage indicates the correct size of drill to use for a given tap size.

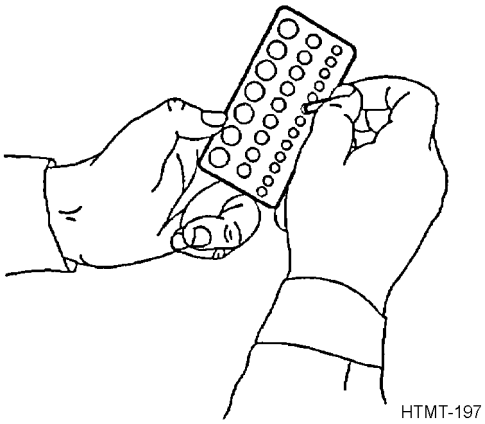

16.13 USING MARKING GAGES.

Press the head (1) firmly against the edge of the work (2) to be marked. With a wrist motion, tip the gage forward until the spur touches the work. Push the gage along the edge to mark the work, keeping the head firmly against the work.

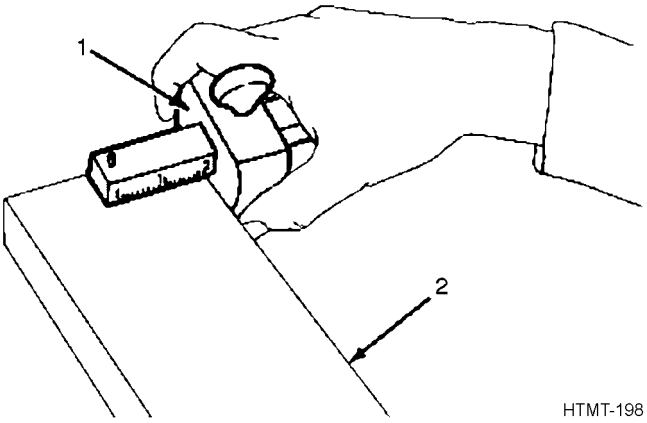

16.14 CARE OF GAGES.

1. Exercise care when using thickness gages to measure clearance of knives and cutters on machines. Do not lower knife on thickness blade and then try to remove the gage. The blade may be shaved off if it is too tight. Never use gages for cleaning slots or holes. When blades are damaged or worn they should be replaced. Blades in a case are removed by loosening the clamp and sliding out the damaged blade. Insert new blade and tighten clamp.

2. As needed, coat metal parts of all gages with a light film of oil when not in use to prevent rust. Store gages in separate containers. Do not pile gages on each other. Always return blades of leaf-type gages to case after use. Keep graduations and markings on all gages clean and legible. Do not drop any gage. Small scratches or nicks will result in inaccurate measurements.

CHAPTER 17
PLIERS AND TONGS

17.1 HOW TO CHOOSE AND USE THEM.

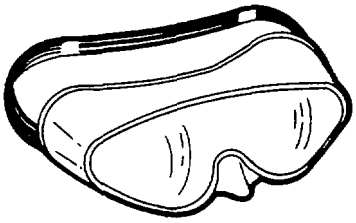

WARNING

Wear eye protection when using pliers that cut or trim. Keep fingers away from jaws and cutting edges to prevent personal injury.

Types and Uses, Paragraph 17.2, provides you with a list of some types of pliers and tongs. These pages should help you select the right pair to do the job. Using, Paragraph 17.3, tells you how to use the pliers or tongs to perform the desired function. Care of Pliers and Tongs, Paragraph 17.6, tells you how to care for the items.

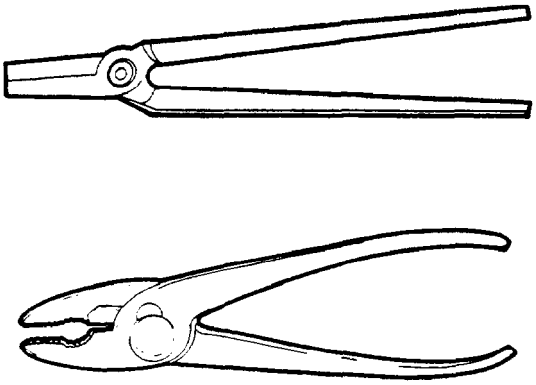

HTMT-199

17.2 TYPES AND USES.

17.2.1 Slip-joint Pliers.

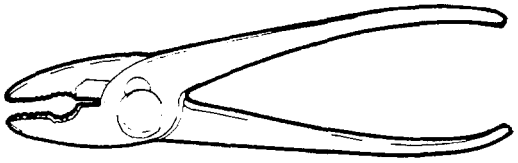

HTMT-200

The slip-joint combination pliers have serrated (grooved) jaws, with a rod-gripping section, a cutting edge, and a pivot. The serrated jaws and rod-gripping section are used to hold objects. The cutting edge permits the cutting of soft wire and nails. However, cutting hard materials or large gage wire will spring the jaws, making the pliers useless. The pivot is used to adjust the jaw opening to handle large or small objects.

17.2.2 Diagonal Cutting Pliers.

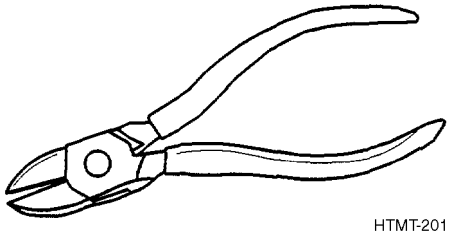

HTMT-201

The diagonal cutting pliers have a fixed pivot. The jaws are offset by about 15 degrees and are shaped to give enough knuckle clearance while making flush cuts. The diagonal cutting pliers are used for cutting small, light materials such as wire, cotter pins, and similar materials. These pliers are not to be used to hold or grip objects.

17.2.3 Lineman's Side Cutting Pliers.

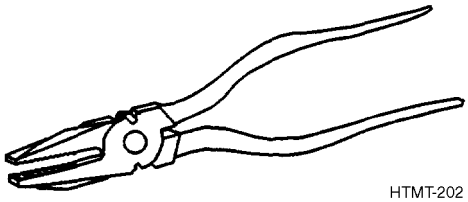

HTMT-202

The lineman's side cutting pliers have serrated jaws, a rod-gripping section, side cutters, wire cropper, a fixed pivot, and parallel handles. The flat serrated jaws are used to bend sheet metal and twist electrical wire. The rod-gripping section is used to hold rods and bend small rods. The side cutters are located just above the pivot point, where maximum pressure may be applied. They are ground at an angle permitting sharp flush cuts on electrical wire. A pair of croppers is located above the pivot. They are used to shear larger wire. Lineman's pliers used around electrical circuits have insulated sleeves over the handles to reduce the possibility of electrical shock.

17.2.4 Parallel Jaw Pliers.

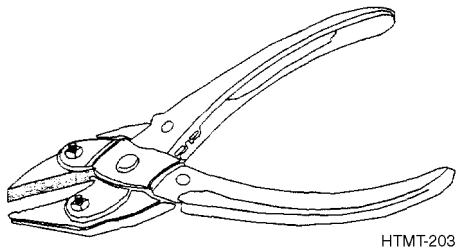
HTMT-203

The parallel jaw pliers are constructed so that the jaws remain parallel to each other throughout the entire distance of travel. It has two jaws, a pivot pin, curved handles, and tension springs. The tension springs are contained within the curved handles and will open the jaws when the handles are released. These pliers are used to grip objects which have flat surfaces.

17.2.5 Flat-nose Pliers.

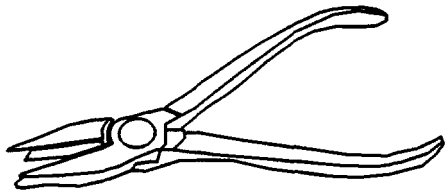
HTMT-204

The flat-nose pliers have flat serrated jaws, a fixed pivot, and curved handles which may have insulated sleeves. These pliers are used to bend light sheet metal and wire.

17.2.6 Round-nose Pliers.

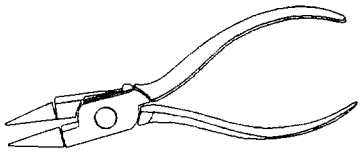
HTMT-205

The round-nose pliers are used to make loops in soft wire. It has smooth, round jaws, a fixed pivot, and curved handles, which may have insulated sleeves.

17.2.7 Straight-lip Flat-jaw Tongs.

HTMT-206

The straight-lip flat-jaw tongs have two straight jaws, a fixed pivot point, and long, straight handles. These tongs are used to hold bearings and bearing inserts while setting them in place.

17.2.8 End Cutting Pliers.

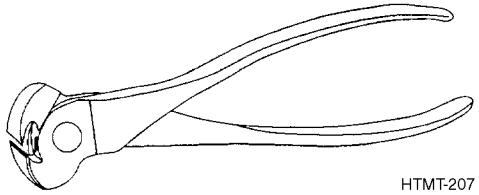
HTMT-207

The end cutting pliers are used to crop wire flush to the working surface. They are designed to keep hands and fingers safely away from the wire ends.

17.2.9 Wire Strippers (Multipurpose).

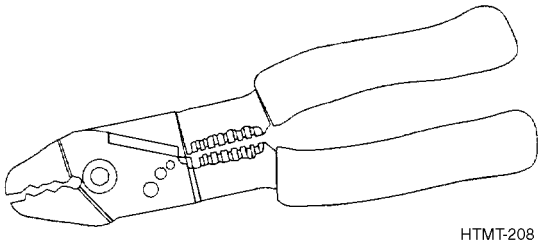
HTMT-208

Wire strippers are used to strip insulation from electrical cord. When closed around wire, only the insulation is cut. The wire core remains undamaged.

17.2.10 Crimping Tools. There are approximately twenty different types of crimping tools now in use at field locations, each one designed to install a specific type and size of connector. These tools are used to install electrical taper pins, butt connectors, ring tongue terminals, ferrules, etc. The various crimping tools differ in some respects due to different manufactures; however, they are all marked to indicate manufacturers part number and wire size limitations.

Several of the crimping tools are adjustable to accommodate different insulation thicknesses. This adjustment is accomplished by positioning two pins (adjustment pins available part No. 3144921) located near the pivot point of the tool.

Each of the two pins can be placed in any one of three different locations labeled 1, 2, and 3.

When making adjustment, make sure that both insulation adjustment pins are in the same numbered positions. Position number 3 is for wire having a large insulation diameter, position number 2 is for wire having a medium insulation diameter, and position number 1 is for wire having a small insulation diameter.

Crimping tools are often color coded. This color will be located either on the handle or on the crimping jaws of the tool. The color indicates the size of wire to be connected. Often the connector is also color coded to match the tool. The color codes normally used are as follows:

Wire Sizes	Color
26-22	Yellow
22-16	Red
16-14	Blue
12-10	Yellow
8	Red
6	Blue
4	Yellow
2	Red
10	Blue
20	Yellow
30	Red
40	Blue

The locator (stop plate) on some crimpers is used to position the different types of connectors (e.g., ring tongue on butt-connectors) and is to be used to position the connectors in all cases.

The majority of crimping tools use a ratchet control that prevents the opening of the jaws once the crimp is begun. This is to insure that the correct amount of pressure is applied to the connector.

Maintenance should consist of lightly lubricating all pins and pivot points as necessary. Use IBM No. 9 oil, part No. 3034653.

Table 16 in the Appendix illustrates the crimping tools available and lists all pertinent data pertaining to their usage.

17.2.11 Wire Twister.

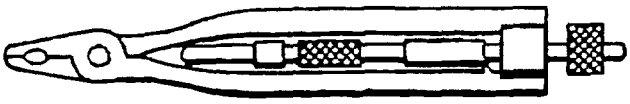

HTMT-209

Forged alloy steel pliers are best for twisting safety wires on crucial aircraft, automotive and similar equipment. Has a right-hand twist and a standard nose shape and a riveted lap joint with side cutter. Jaws lock in the closed position and have scored or serrated gripping surfaces. A spiraling mechanism welded to one handle produces a close, uniform twist when rod is pulled and pliers rotate.

17.3 USING SLIP-JOINT PLIERS.

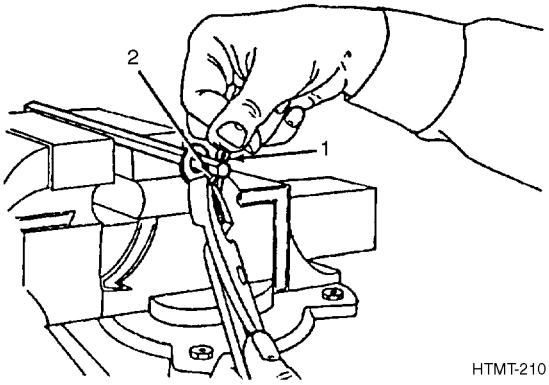

HTMT-210

NOTE

The following procedure for bending the ends of a cotter pin after installation is not the only use of slip-joint pliers.

1. With cotter pin installed, push rounded head of pin (1) with thumb of one hand. Grasp the long section of extending cotter pin (2) with pliers, and bend it back flat against the metal surface or nut.

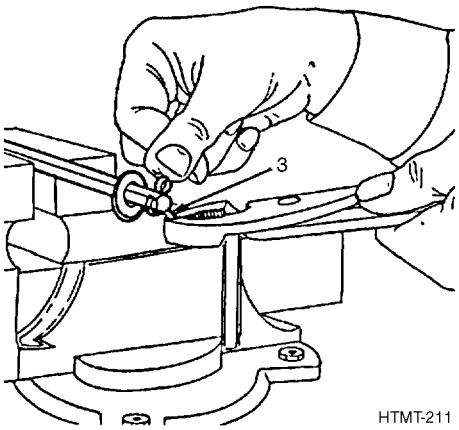

HTMT-211

2. Grasp the other section of the extending cotter pin (3) and bend it back flat against the metal surface or nut.

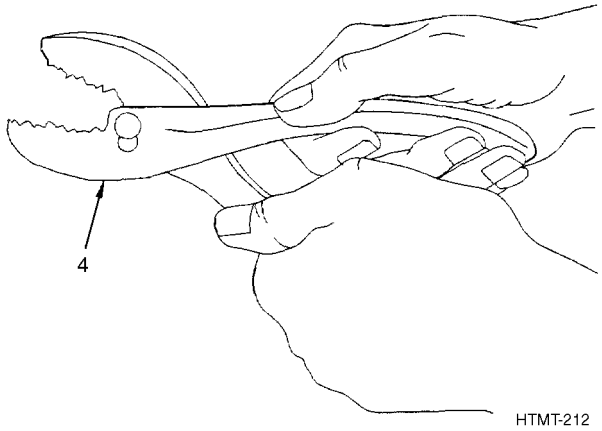

3. Adjust pliers (4) to obtain a wide jaw opening.

CAUTION

Too much pressure could break the cotter pin or spring the plier jaws.

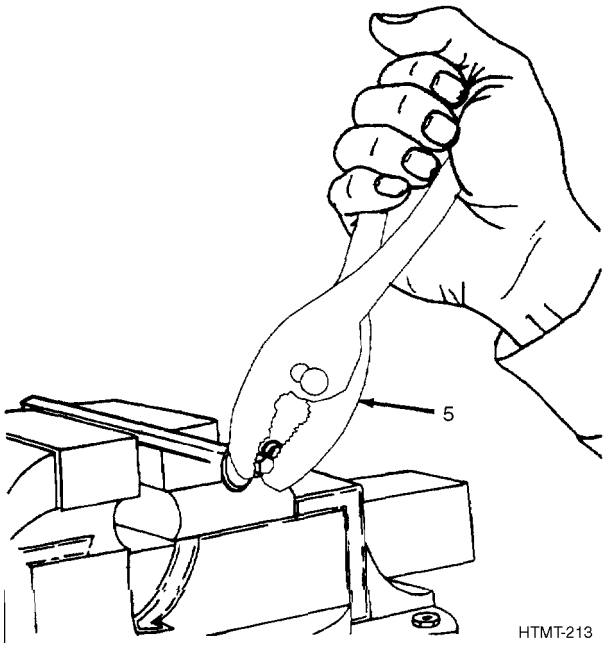

4. Place plier jaws (5) around both bent ends of the cotter pin and apply pressure on the handles, bending cotter pin ends flush.

17.4 USING DIAGONAL CUTTING PLIERS.

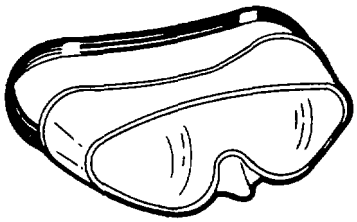

WARNING

Wear eye protection. Keep fingers away from jaws and cutting edges.

CAUTION

Diagonal cutting pliers are to be used only for cutting.

NOTE

The following procedure for the removal of a cotter pin is not the only use of diagonal cutting pliers.

1. Position cutters so the rounded end (1) of the cotter pin is between the cutting jaws.

2. Close the cutting jaws by applying pressure to the handles (2). This will shear off the end of the cotter pin (3).

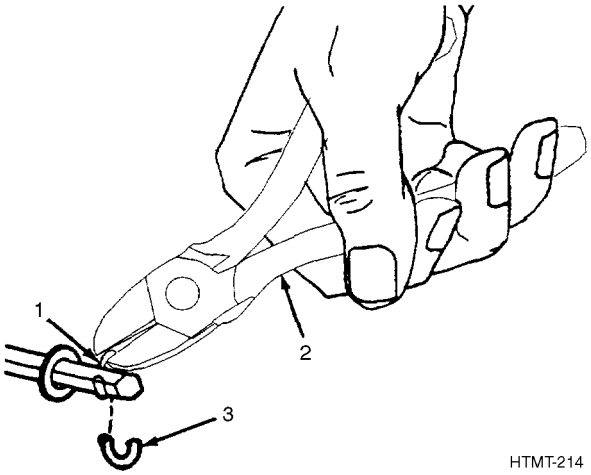

17.5 USING LINEMAN'S SIDE CUTTING PLIERS.

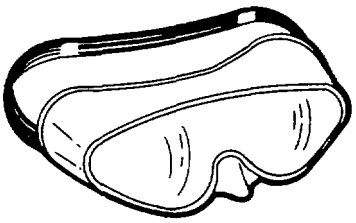

WARNING

Wear eye protection when cutting or trimming. Keep fingers away from jaws and cutting edges.

NOTE

The following procedure for twisting wires is not the only use of lineman's side cutting pliers.

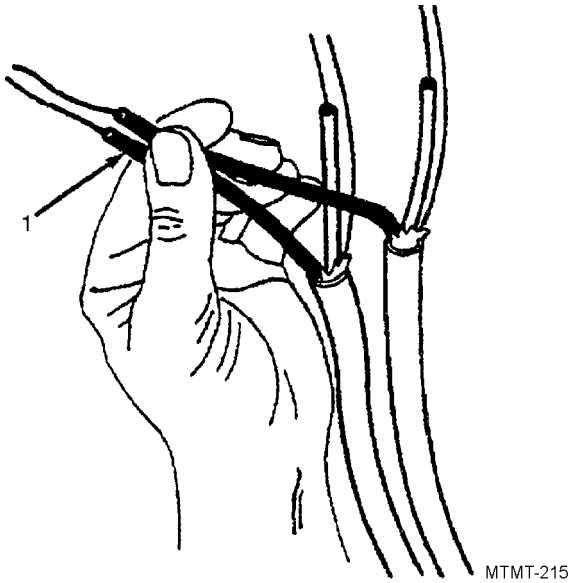

1. Using one hand, hold wires to be twisted (1) just above the point where the twist is to begin.

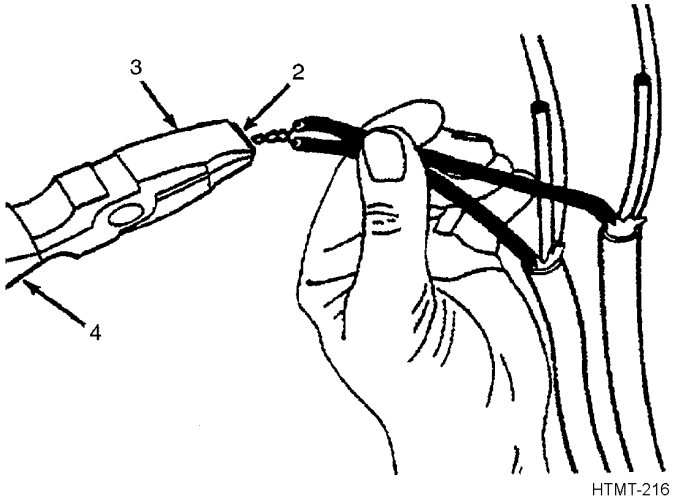

2. Grasp the ends of the wires (2) firmly on the serrated jaws (3) and twist the pliers (4).

3. Continue twisting pliers until wire has been twisted to desired length.

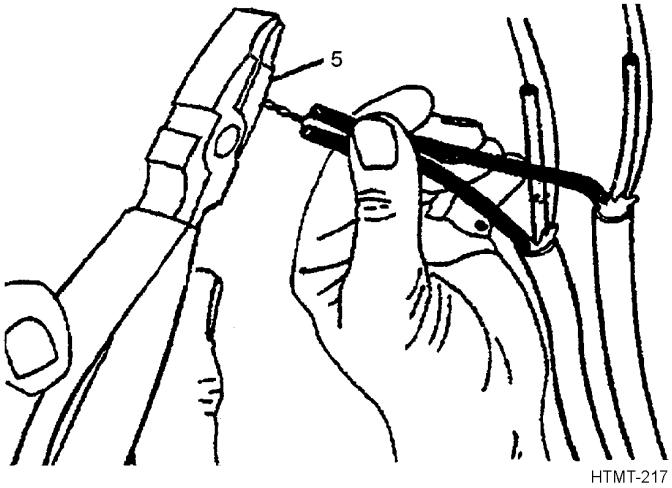

4. Open plier jaws and place the ends of the twisted wires between the cutting edges (5). Trim the ends of the wire.

17.6 CARE OF PLIERS AND TONGS.

1. As needed, remove dirt and grease with a clean rag and apply a light coat of oil after each use.

2. Store pliers in a tool box or hang on racks when not in use.

3. Do not remove insulation on handles or oil handles which are insulated.

4. Do not use pliers for prying or for removing nuts or bolts. Replace all pliers which have broken jaws, handles, or cutting edges.

CHAPTER 18
VISES

18.1 HOW TO CHOOSE AND USE THEM.

Types and Uses, Paragraph 18.2, provides you with a list of some of the types of vises. These pages should help you select the right vise to do the job. Using, Paragraph 18.3, tells you how to use the vise to perform the desired function. Care of Vises, Paragraph 18.5, tells you how to care for the items.

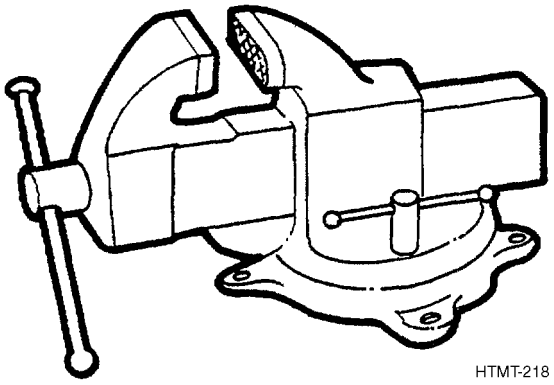

HTMT-218

18.2 TYPES AND USES.

18.2.1 Machinist's Bench Vise.

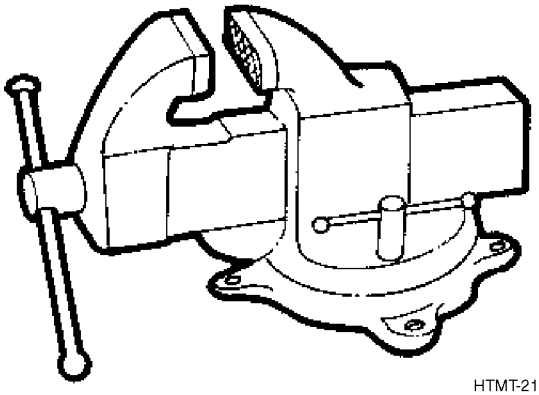

HTMT-219

The machinist's bench vise has rough jaws which prevent the work from slipping. It has a swivel base, allowing the user to position the vise in a better working position. Machinist's bench vises are usually bolted to a work bench or table. They are used for holding or clamping large, heavy objects.

18.2.2 Bench and Pipe Vise.

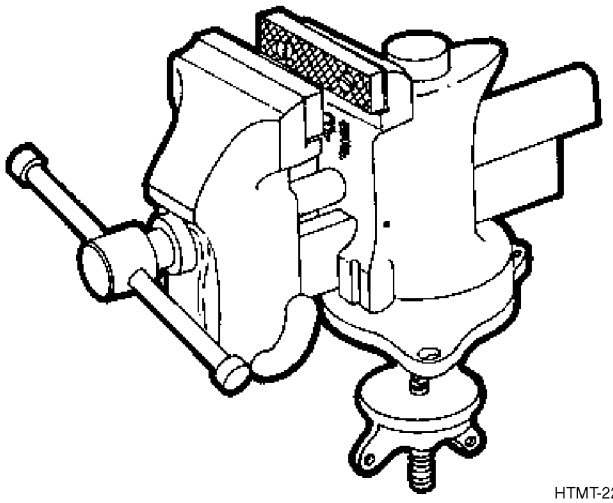

HTMT-220

The bench and pipe vise is a dual purpose vise. It has rough jaws and a swivel base similar to the machinist's bench vise. However, it also has built-in pipe jaws. Bench and pipe vises are usually bolted to a work bench or table. They are used for holding or clamping heavy objects, holding pipe for cutting and threading, and for forming and shaping metal.

18.2.3 Clamp Base Bench Vise.

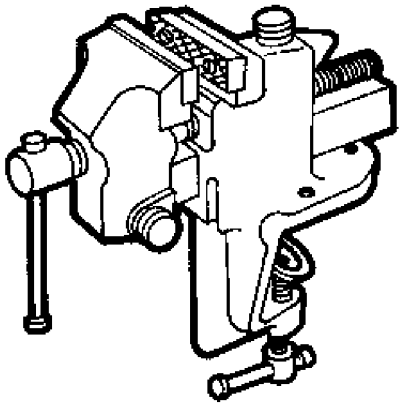

HTMT-221

The clamp base bench vise is a lightweight, portable machinist's vise. It is attached to a table or bench with the mounting clamp. It has rough jaws for holding material and may have a swivel base. Clamp base bench vises are used to hold light materials or in areas where a heavier vise is not available.

18.2.4 Pipe Vise.

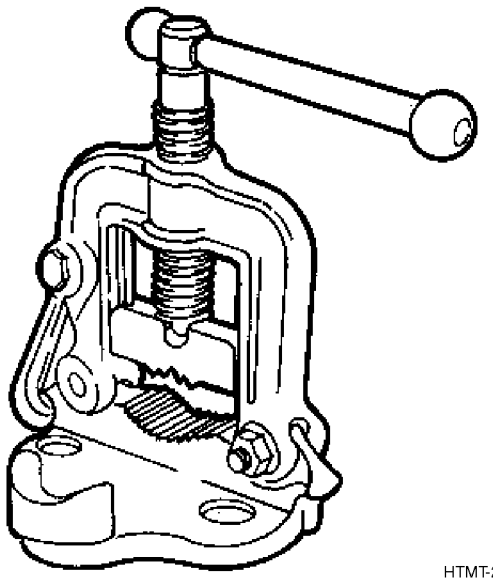

HTMT-222

The pipe vise is a special purpose vise designed to hold round stock. It has hinged jaws which allow the user to position the work and then lock it in place. Some pipe vises have a section of chain instead of jaws for holding the pipe. Pipe vises are usually bench mounted. They are used to hold pipe from 1/8 inch to 8 inches in diameter while cutting or threading.

18.2.5 Machine Table Vise.

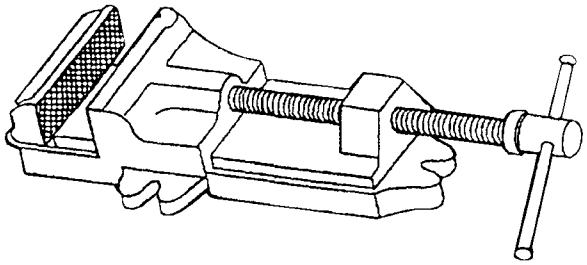

HTMT-223

The machine table vise is a special purpose vise which may be bolted to a drill press, lathe, or table. It is available in two sizes, one having a 3-1/2-inch jaw width and a 3-inch jaw opening, and the other having a 6-inch jaw width and a 6-inch jaw opening. Machine table vises are used to hold small pieces of wood or metal for machining or drilling operations.

18.2.6 Pin Vise.

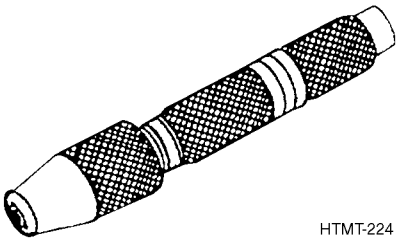

HTMT-224

The pin vise is a special purpose vise which has a knurled metal handle and a chuck. It is designed to hold material from 0 to 0.187 inches in diameter. The pin vise is used to hold files, taps, and small drills during machining operations.

18.2.7 Piston Holding Vise.

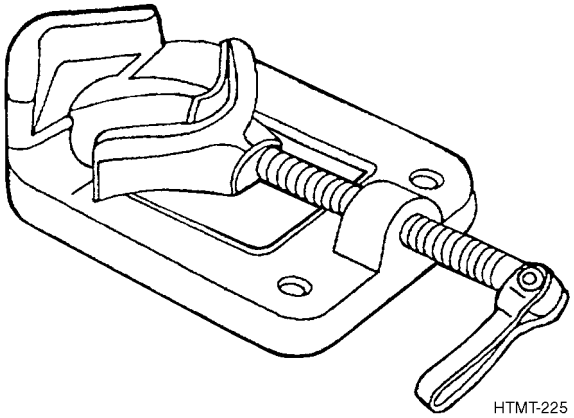

HTMT-225

The piston holding vise is a special purpose vise which can hold engine pistons up to and including 5-1/2 inches in diameter. This vise may be bolted to a bench or table.

18.2.8 Handsaw Filing Vise.

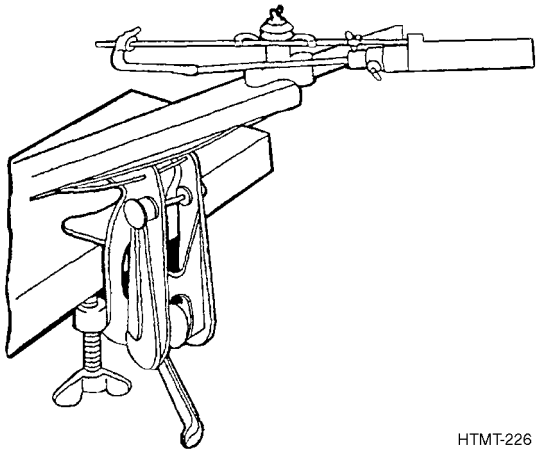

HTMT-226

The handsaw filing vise is a special purpose vise used for holding handsaws while they are being sharpened. It has jaws

between 9-1/2 and 11 inches wide, and an attachment for holding a file at a constant angle.

18.3 USING A MACHINIST'S BENCH VISE.

WARNING

Make sure the vise is bolted securely to a bench or table and the swivel base is locked.

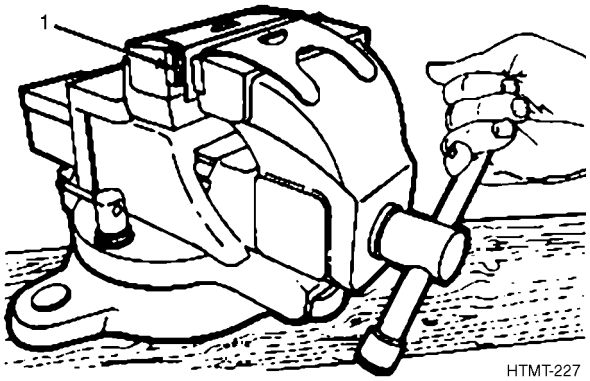

1. Open jaws (1) of vise wide enough to allow you to insert the object you want to clamp.

CAUTION

- Use brass or copper caps on vise jaws to protect soft material when clamping.
- Do not strike vise with a heavy object or try to hold large work in a small vise.
- A work surface, mounted with a machinist's bench vise, pipe vise, utility vise or a similar table vise shall be sufficiently stable or anchored to the floor to prevent the work surface from toppling during use of the vise.

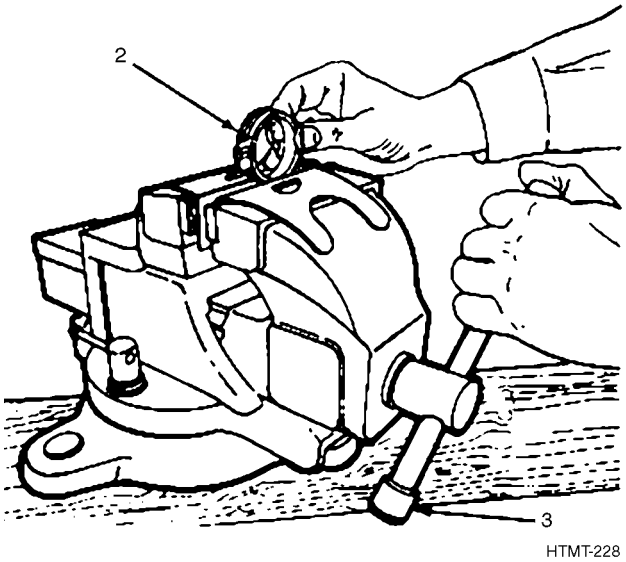

2. Insert object (2) to be clamped between vise jaws and tighten handle (3).
3. Work should be held firmly in place, but the jaws should not be so tight that they mar the finish. A piece of rawhide or leather may be used to protect highly polished surfaces.

NOTE

When holding hard material in vise jaws tightened by hand, give the vise handle a sharp rap for final tightening.

18.4 USING A PIPE VISE.

WARNING

Pipe ends are extremely sharp, handle with care.

NOTE

The following procedure provides the steps required to fasten a piece of pipe in a hinged jaw pipe vise.

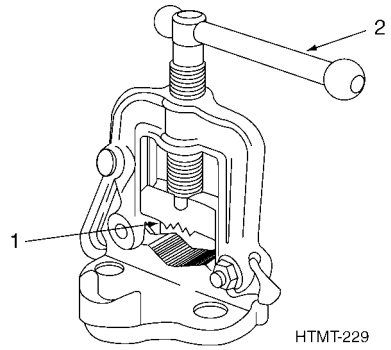

1. Open the pipe-holding jaws (1) by turning the threaded T-handle (2).

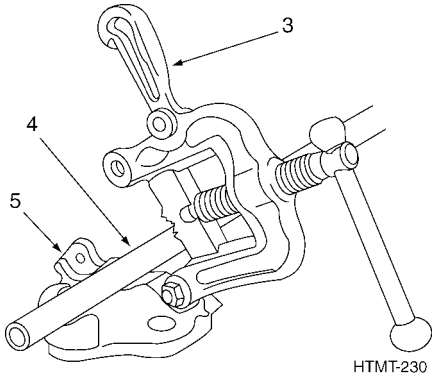

2. Lift locking device (3) and open pipe vise.

3. Insert section of pipe (4) in vise and close pipe vise, by pushing locking device against lip on the side of the lower holding jaw (5).

4. Insert locking bolt through aligned holes of upper and lower lip jaws.

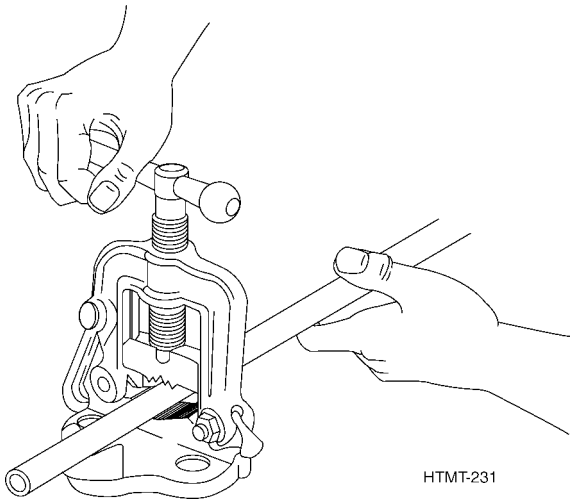

CAUTION

- Do not apply too much pressure to copper or aluminum pipe.

- A work surface, mounted with a machinist's bench vise, pipe vise, utility vise or a similar table vise shall be sufficiently stable or anchored to the floor to prevent the work surface from toppling during use of the vise.

5. Tighten the pipe holding jaws by turning the threaded T-handle.

18.5 CARE OF VISES.

1. Clean with a rag after each use, and apply a light coat of oil.

2. Never strike a vise with a heavy object or try to hold large work in a small vise.

3. Keep jaws in good condition.

4. Never oil the swivel base or swivel joint, as this decreases its holding power.

5. When not using a vise, bring the jaws lightly together and leave the handle in a vertical position. This will protect the jaws.

CHAPTER 19
CLAMPS

19.1 HOW TO CHOOSE AND USE THEM.

Types and Uses, Paragraph 19.2, provides you with a list of some of the types of clamps. These pages should help you select the right clamp to do the job. Using, Paragraph 19.3, tells you how to use the clamps to perform the desired function. Care, Paragraph 19.5, procedures tell you how to care for the items.

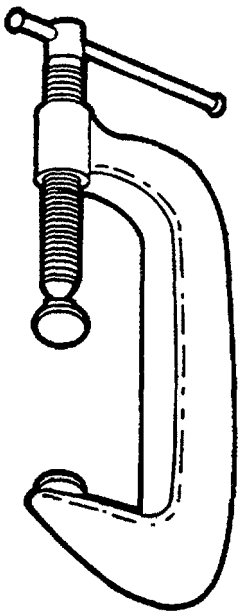

HTMT-232

19.2 TYPES AND USES.

19.2.1 C-Clamps.

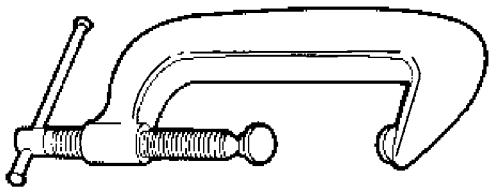

HTMT-233

C-clamps are used to hold work which cannot be held in a vise, or which has to be held for extended periods of time. They are available in a variety of sizes.

19.2.2 Hand Screw Clamps.

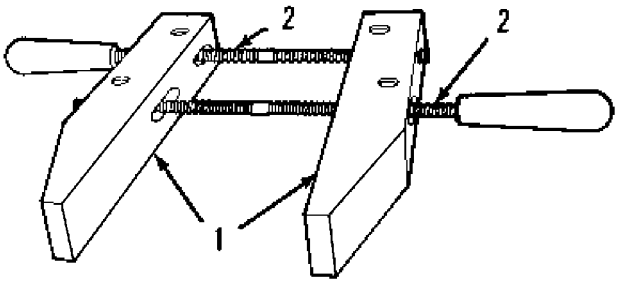

HTMT-234

The hand screw clamp is made up of two hardwood or high impact plastic jaws (1) and two hand-operated screws (2) which hold the clamp together. The hand screw clamp is used for holding wood while gluing. They are available in a variety of sizes.

19.3 USING A C-CLAMP.

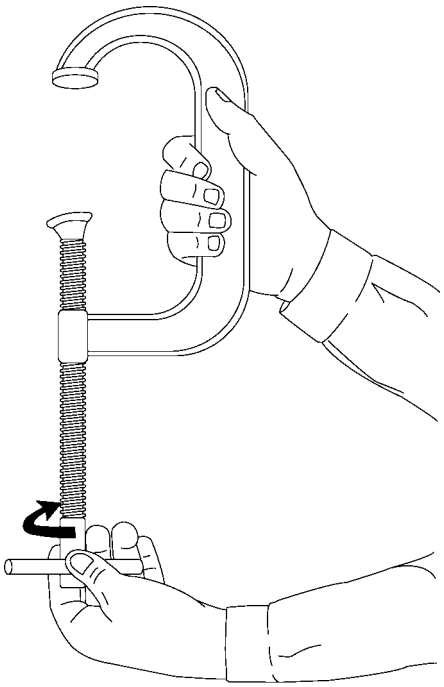

HTMT-235

1. Select a clamp which has an opening about 1-1/2 to 2 inches wider than the material to be clamped. Glass and highly polished surfaces must be protected. Use brass shims or wooden blocks. Open clamp as wide as it will go.

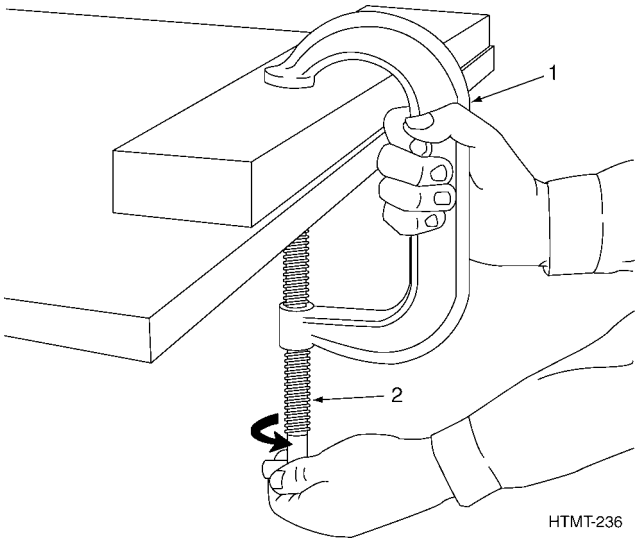

2. Align work and protective blocks if required. Place clamp (1) in position, and tighten operating screw (2) until contact is made with material being clamped.

3. Check alignment of material being clamped. Check that the clamp is applying even pressure over entire surface.

CAUTION

Do not use wrenches or bars to tighten clamps.

4. Tighten clamp against surface.

19.4 USING A HAND SCREW CLAMP.

CAUTION

Use only on wood.

Examine material to be clamped and select a clamp which will span across the work.

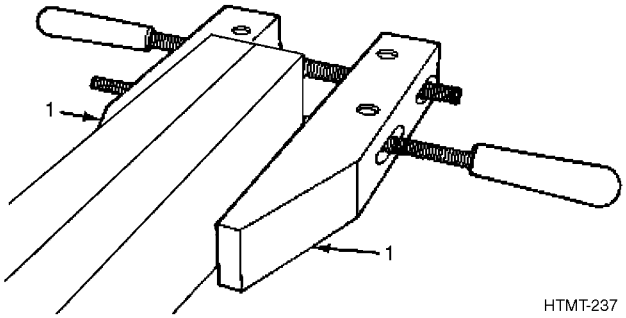

1. Open the clamp jaws (1) and place the work between the jaws. Keep jaws parallel. Use rawhide or soft leather to protect highly polished surface.

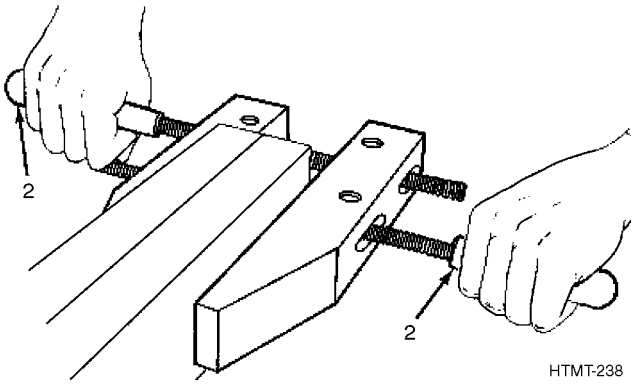

2. Tighten operating screws (2) making sure the clamp jaws remain parallel. Be sure jaws fit firmly on work. Properly clamped work will form a square.

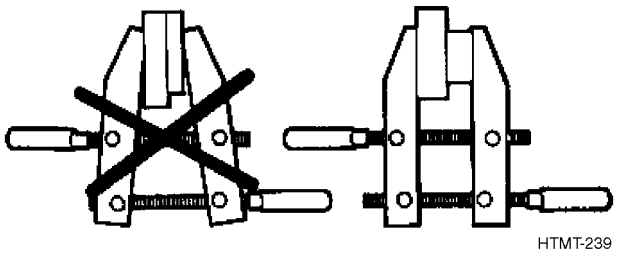

CAUTION

Make sure vise jaws remain parallel to edges of work.

19.5 CARE OF C-CLAMPS.

1. Clean threads and swivel with a rag, and lubricate with a light coat of oil.

2. Store on a rack, on pins, or in a tool box. For long storage periods, apply a rust-preventive compound.

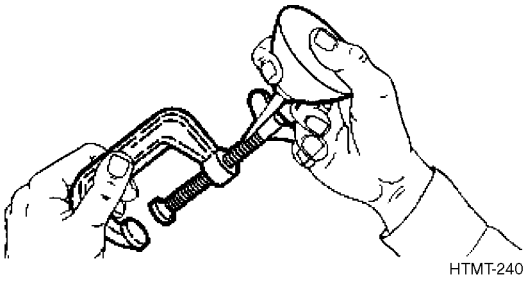

19.6 CARE OF HAND SCREW CLAMPS.

1. Lubricate screws with a few drops of light oil. Apply light coat of linseed oil to wood surfaces.

2. Store clamps on racks, pins, or carefully place them in your tool box. Wipe clamps off with a rag before storing.

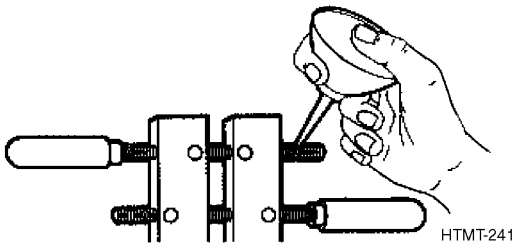

CHAPTER 20
JACKS

20.1 HOW TO CHOOSE AND USE THEM.

Types and Uses, Paragraph 20.2, provides you with a list of some of the types of jacks. These pages should help you select the right jack to do the job. Using, Paragraph 20.4, tells you how to use the jack to perform the desired function. Care of Jacks, Paragraph 20.6, tells you how to care for the items.

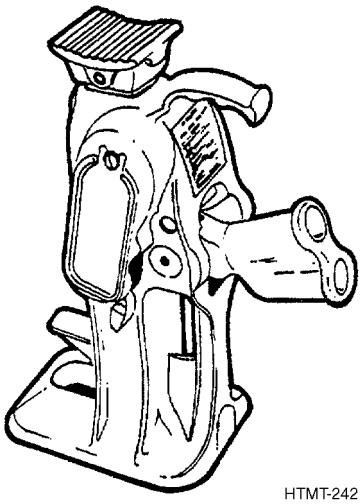

HTMT-242

20.2 TYPES AND USES.

Jacks are used to raise or lower work and heavy loads short distances. Some jacks are used for pushing and pulling operations. Others are used for spreading and clamping operations.

20.2.1 Screw Jacks. Vertical screw jacks come in several capacities and different lowered and raised heights. The screw moves up or down, depending on the direction the handle is turned. These jacks are used for many different purposes. They can be used to lift vehicles. They can also be used to raise heavy crates, small buildings, or other items too heavy to be raised by prying with wrecking bars.

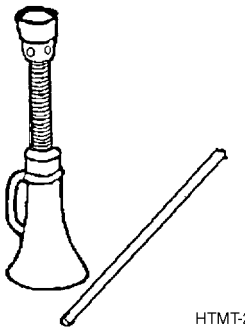

HTMT-243

The vertical bell base screw jack is operated by hand using a steel bar handle which is inserted in the holes of the top housing or head.

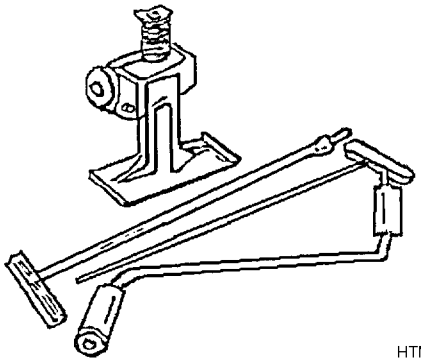

HTMT-244

The vertical screw jack with collapsible handle is operated by hand using the collapsible handle which is inserted in a socket.

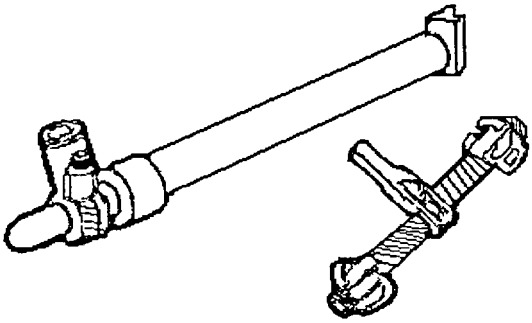

HTMT-245

Another type of screw jack is called an outrigger jack. It is equipped with end fittings which permit pulling parts together or pushing them apart.

20.2.2 Ratchet Lever Jacks.

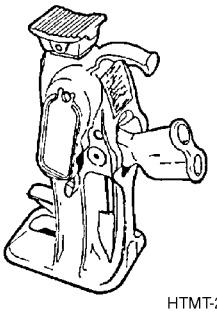

HTMT-246

A vertical ratchet lever jack has a rack bar that is raised or lowered through a ratchet lever. Some are equipped with a

double socket, one for lowering, one for raising. Others have one socket and have an automatic lowering feature.

An outrigger ratchet jack is ratchet operated and has an extra reverse ratchet handle and a base plate.

20.2.3 Hydraulic Jacks.

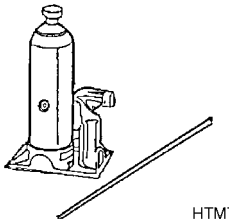

HTMT-247

A hydraulic jack operates through pressure applied to one side of a hydraulic cylinder which moves the jack head. These jacks are automatically lowered by releasing the pressure. Vertical hydraulic jacks come in a variety of types, in capacities from 3 to 100 tons, having different extended heights.

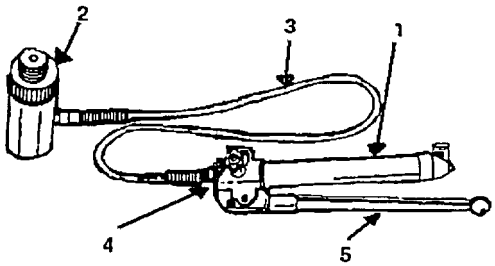

HTMT-248

A push-pull hydraulic jack consists of a pump (1) and ram (2) connected by a hydraulic or oil hose (3). These jacks are rated at 3, 7, 20, 30, and 100-ton capacities and have many different applications.

The push-pull hydraulic jacks are furnished with an assortment of attachments that enable you to perform countless pushing, pulling, lifting, pressing, bending, spreading, and clamping operations. The pump is hand operated. Simply turn the control valve (4) on the side of the pump clockwise, stroke the hand lever (5) up and down and the ram will extend. The flexible hydraulic or oil hose allows you to operate the ram from a safe distance in any desired position.

The ram retracts automatically by turning the control valve counter clockwise. The attachments can be threaded to the end of the plunger, to the ram body, or into the ram base.

Illustrated below are some standard combinations of the push-pull hydraulic jack attachments for various operations.

1. Jack pushing combinations
2. Jack pulling combinations
3. Jack spreading combinations
4. Jack clamping combinations

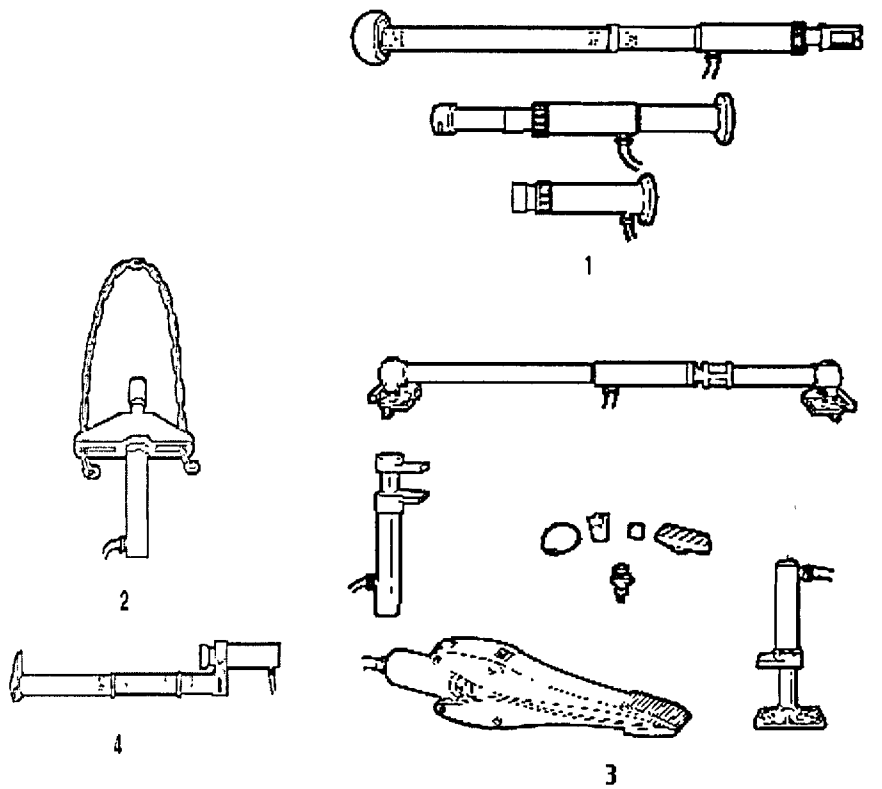

HTMT-249

20.3 SAFETY.

1. Keep fingers away from all moving parts.

WARNING

Never get under a load that is only supported by a jack. Any jack is subject to failure and personal injury could result.

2. When jacking up vehicles, make certain no one is under the vehicle to be raised. Set the hand brake firmly and block the front wheels if a rear wheel is being changed. Block the rear wheels if a front wheel is being changed. Place blocking or other supports under the vehicle when it is raised to the desired height to prevent it from dropping if the jack fails.
3. Make certain that hydraulic jacks are filled with oil and that there are no visible oil leaks before using.
4. Any new or repaired jack should be carefully inspected by the operator prior to use.
5. Overloading can be hazardous to the jack, the operating personnel, and the load in event of jack failure.
6. Be aware of the capabilities of the jack, especially its load capacity.

20.4 USING A BELL BASE SCREW JACK.

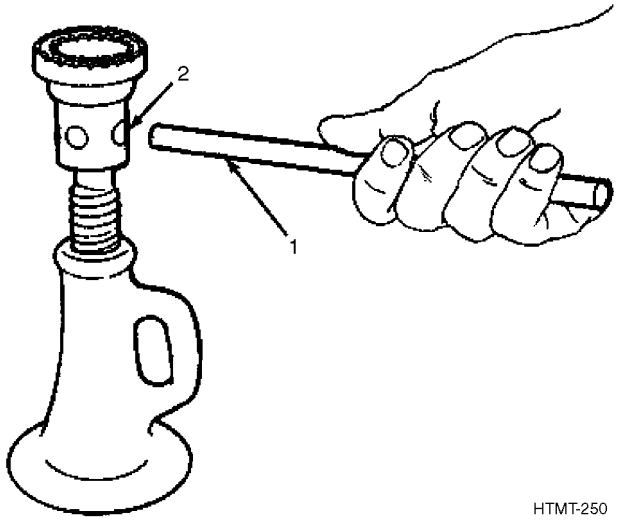

1. Insert the handle or bar (1) in the hole in the top housing or head (2).

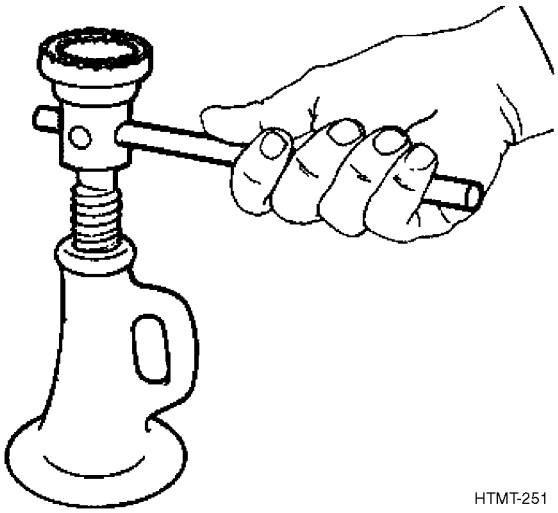

2. Turn or push the handle to the right to raise the jack, to the left to lower the jack.

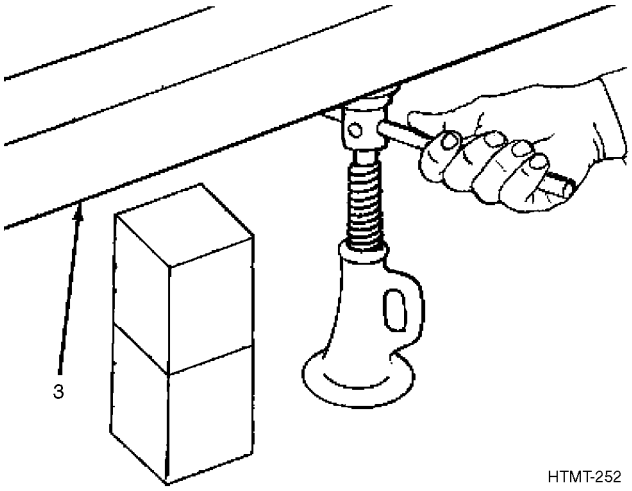

3. The jack will raise the load (3) with every degree turned on the handle.

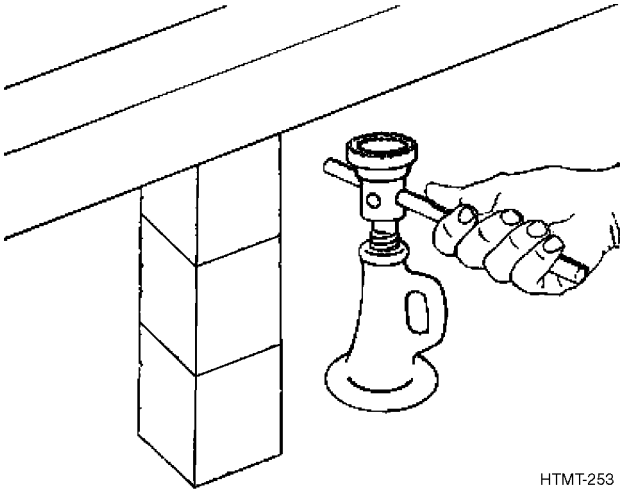

4. Block the load to withdraw the jack.

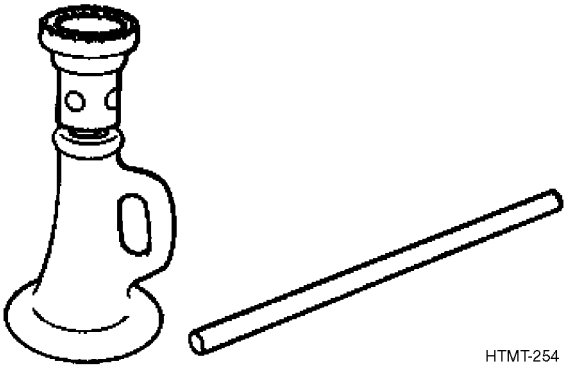

5. Screw the jack all the way down in the lower housing and withdraw the handle or bar for storage upon completion of the job.

20.5 USING A RATCHET LEVER JACK.

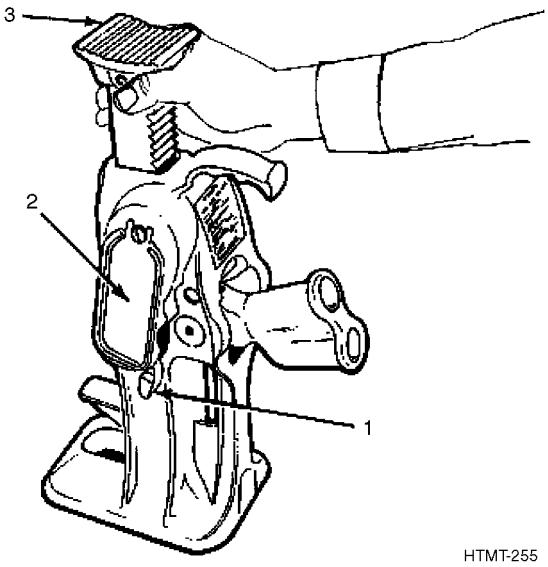

1. The operator should familiarize himself with the jack, its capabilities and its operations. The reversing lever (1) is located below the lifting mechanism cover (2) on the left side of jack when viewed from the lifting lever. When preparing to lift a load, the head (3) can be pulled up by hand to meet the load.

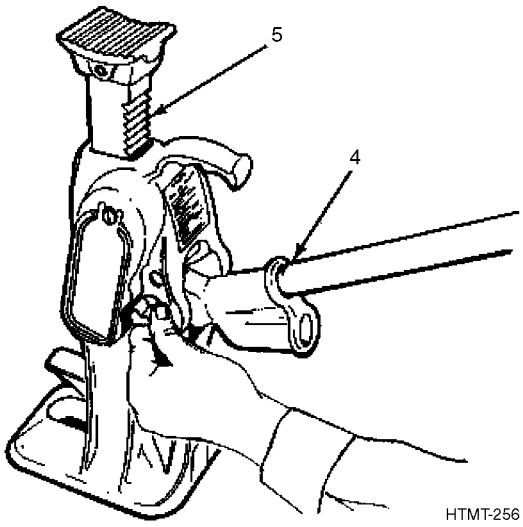

2. To raise a load, pull reversing lever up and toward the operator and operate the lever (4). The jack will raise the load one notch for each lever downstroke. The rack (5) cannot be ratcheted out of the base, as it is designed to stop when raised to its top limit.

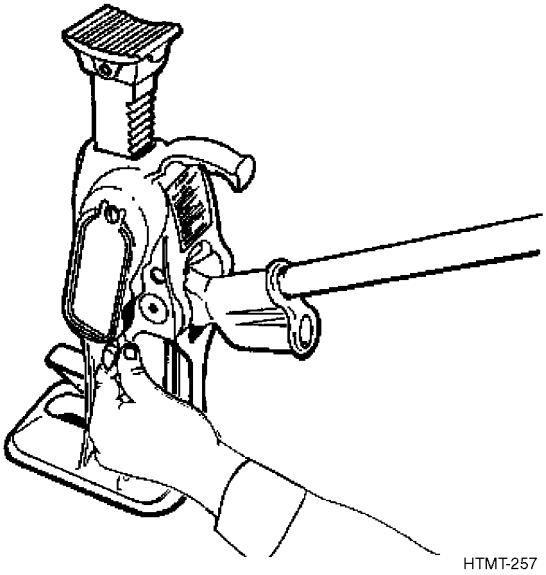

3. To lower a load, push reversing lever to straight-down position and operate the lever. The jack will lower the load one notch for each upstroke of the lever.

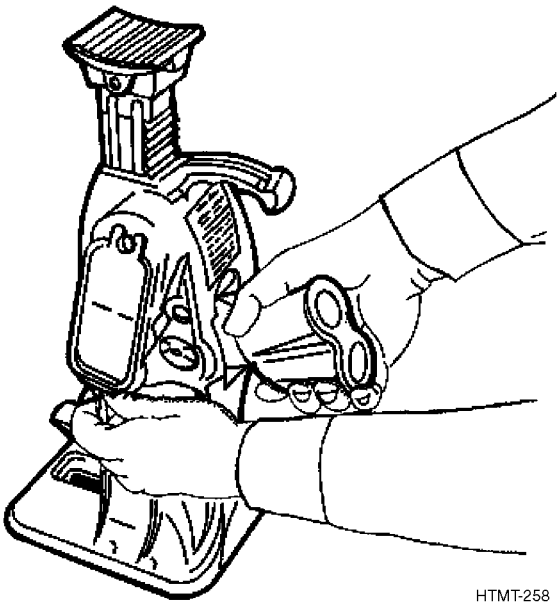

4. When the head of the five-ton jack is not supporting a load, the rack can be allowed to fall free by pressing the reversing lever all the way to the rear and slightly lifting up on the lifting lever. The rack will not fall free if even a slight load is still on the head.

20.6 CARE OF JACKS.

1. Coat all surfaces with a thin film of light oil when not in use.

2. For long periods of storage, the jacks should be covered with a rust-preventive compound and stored in a dry place.

3. Periodically check hydraulic fluid lever in push-pull hydraulic jacks. Stand the pump on end before taking out the fill plug, then fill with oil. Make sure the ram is in the retracted position when checking level of oil and when filling.

4. Ratchet lever jacks should be well greased. A thin coat applied with hand or brush is sufficient for all movable parts except the bushings. The bushings should be filled with grease in the small hole provided for greasing purposes. Keep rack sides and front greased, but do not grease the rack teeth.

CHAPTER 21
HAMMERS, MALLETS AND MAULS

21.1 HOW TO CHOOSE AND USE THEM.

Types and Uses, Paragraph 21.2, provides you with a list of the more common types of hammers. These pages should help you select the right hammer for the job. Care and Safety, Paragraph 21.3, tells you how to keep your tools in proper condition and how to use them safely. Using Hammers, Paragraph 21.4, tells you how to perform a specific task using the carpenter's, machinist's and soft-faced hammers.

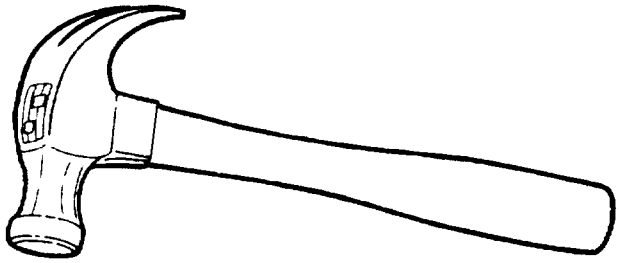

HTMT-259

WARNING

- Eye protection will be worn when using all types of metal-face hammers, soft-face hammers and rubber mallets when there is a danger of flying objects.

- Do not etch on fiberglass handles as this process may weaken the handle. Etch info on the hammer head.

There are many more uses for these hammers, however. By becoming familiar with the uses outlined, you will build a good background for using any hammer.

The "Repair" pages tell you how to replace a wooden handle.

Parts of a hammer are as follows:

PARTS OF A HAMMER ARE AS FOLLOWS:

1. CLAW
2. EYE
3. HANDLE
4. NECK
5. STRIKING FACE
6. CHEEK

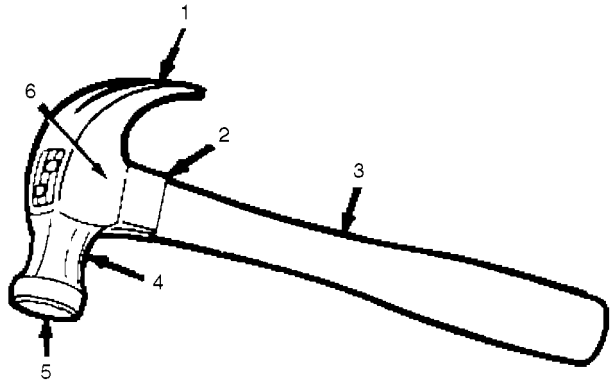

HTMT-260

21.2 TYPES AND USES.

21.2.1 Carpenter's Hammer.

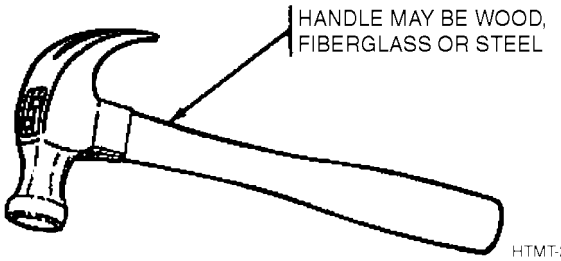

HTMT-261

The carpenter's hammer is used for driving and pulling nails and tapping wood chisels.

There are two types of claws.

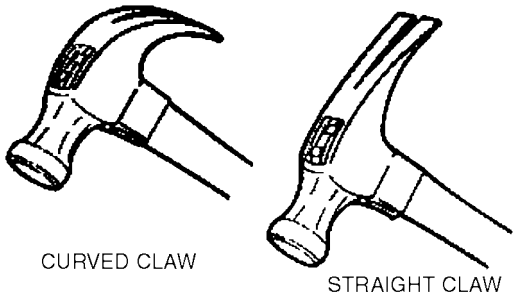

HTMT-262

CAUTION

- Never use a claw hammer on a steel punch or on hardened steel-cut or masonry nails. The face is too soft and could chip.
- Be sure to check for a loose head or a cracked handle before use.

There are two types of striking faces.

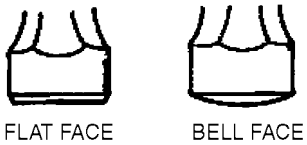

HTMT-263

NOTE

When using a flat-faced hammer to drive a nail, the nail head must be square with the face of the hammer at time of impact. The bell-faced hammer offers a uniform face to the nail head even though the hammer face is slightly tipped at time of impact.

Hammers come in 7, 13, 16 and 20-ounce sizes. Your selection should be based upon the following: flat face for rough work, or bell face for finishing work where you don't want dents in the finish.

The straight claw is generally used for ripping and framing. The curved claw is preferred for general use.

21.2.2 Machinist's Peen Hammer. All machinist's peen hammers have a flat striking face on one end of the head for striking punches and chisels. The other end of the head can be one of the following:

HTMT-264

A ball peen hammer is used for forming soft metal, peening rivet heads, and striking metal in out-of-the-way places.

HTMT-265

A cross peen hammer is used as a chisel for removing rivet heads and for stretching or bending metal.

HTMT-266

A straight peen hammer is used like the cross peen but differs from the cross peen since its peening edge is turned ninety degrees. This keeps the handle parallel to the struck surface.

21.2.3 Bumping Body Hammer.

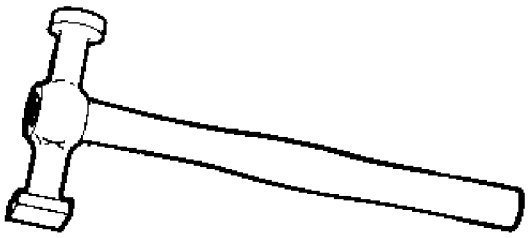

HTMT-267

A bumping body hammer is used to straighten and form metal.

21.2.4 Blacksmith's or Sledge Hammers.

Blacksmith's or sledge hammers are used for striking punches and chisels, for breaking stones and concrete, and for setting timbers. These hammers, although similar to the machinist's hammers, give the user the advantage of a heavier head and a longer handle.

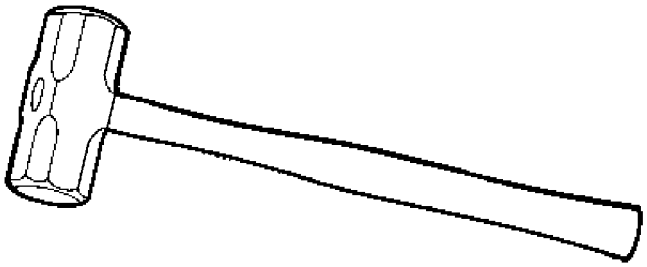

HTMT-268

A double face sledge hammer has similar faces on both sides of the head.

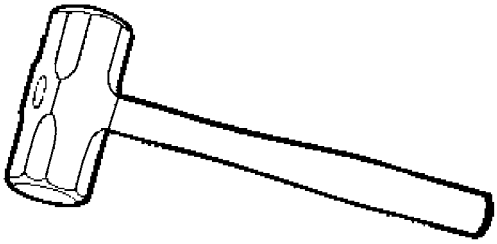

HTMT-269

The club hammer is a heavy double-faced demolition hammer. It is primarily used to break up masonry.

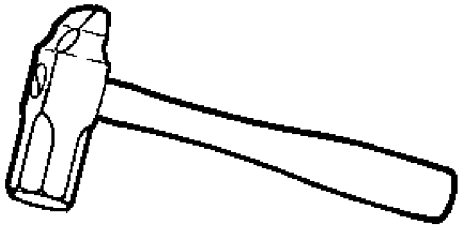

HTMT-270

Cross peen hammers have a broad flat face on one side of the head and a peening chisel edge on the other side.

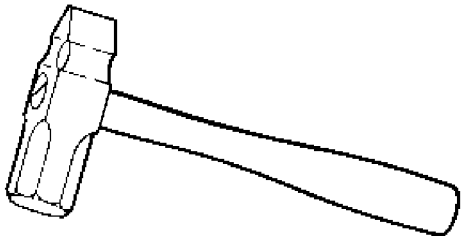

HTMT-271

The straight peen is similar to the cross peen except that its peening edge is turned ninety degrees. This keeps the handle parallel to the struck surface.

21.2.5 Jeweler's Hammer.

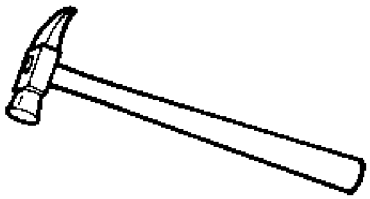

HTMT-272

The jeweler's hammer has a lightweight head weighing between 1-3/4 and 2 ounces. It is used to drive pins and shafts from precision instruments.

21.2.6 Mason's Hammer.

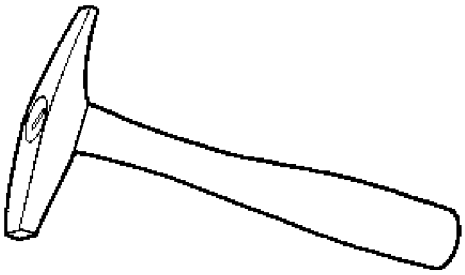

HTMT-273

The mason's hammer has a flat striking face on one end of the head and a tapered chisel on the other end. It is used for setting and cutting bricks and flat stones.

21.2.7 Napping Hammer.

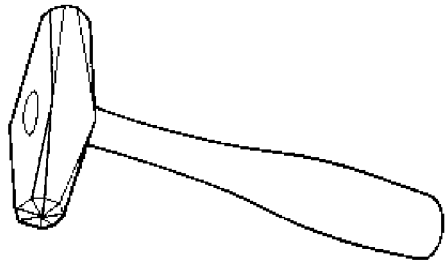

HTMT-274

The napping hammer has a high carbon steel head with two tapered faces and weighs about 3 pounds. It is used for chipping stone surfaces or for forming stones during road construction or similar stone work.

21.2.8 Riveting Hammer.

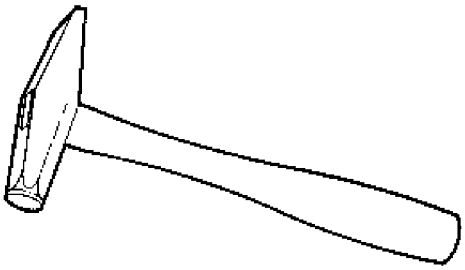

HTMT-275

The riveting hammer has a round face on one end of the head. It is used for peening rivet heads. The other end has a tapered chisel which is used for upsetting rivets.

21.2.9 Sawmaker's Hammer.

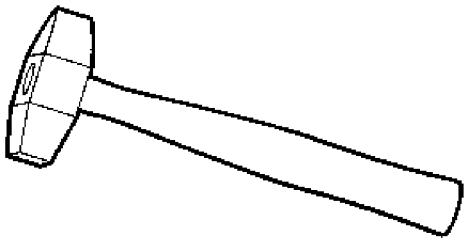

HTMT-276

The sawmaker's hammer has a tapered blunt face on one end of the head and a tapered chisel face on the other end. It is used for setting the teeth on saws when a setting tool is unavailable.

21.2.10 Setting Hammer.

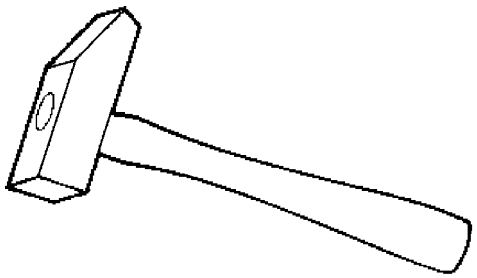

HTMT-277

The setting hammer has a square flat face on one end of the head and a sloping beveled edge on the other end. It is used in sheet metal work for leveling and bending edges and for setting double seams.

21.2.11 Soft-Faced Hammer.

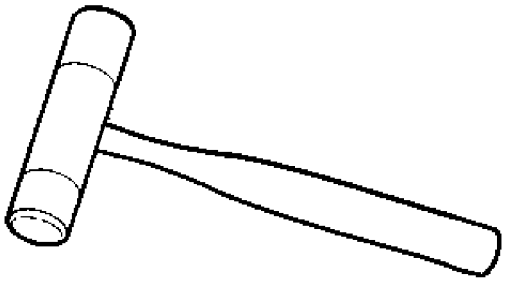

HTMT-278

Soft-faced hammers are capable of delivering heavy blows to machined, highly polished or soft surfaces without damaging the surface.

21.2.12 Lead or Copper Hammer.

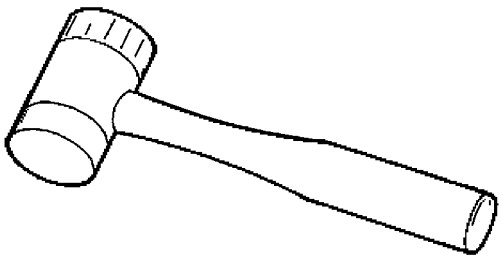

HTMT-279

Lead or copper hammers are usually used for aligning steel surfaces. Copper hammers range in head weight from 8 ounces up to 3 pounds. Working surfaces of lead and copper hammers may be filed to restore even faces. Molds are available for repouring lead hammers.

21.2.13 Inserted Soft-Faced Hammer.

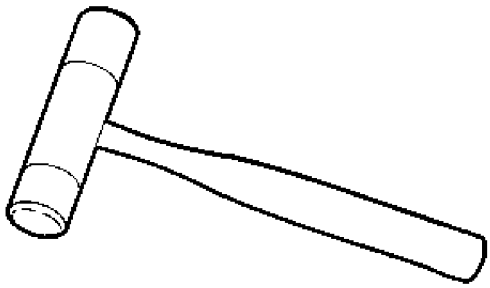

HTMT-280

Inserted soft-faced hammers provide the user with a dual purpose hammer. Any two faces may be assembled on a single handle holder. The following tables will assist you in selecting the proper face hardness for the task you are attempting:

Hardness	Symbol	Color
Soft	S	Brown
Medium	M	Red
Tough	T	Green
Medium Hard	N	Cream
Hard	H	Black
Extra Hard	XH	Yellow

Faces and handle holders are available in 1 inch, 1-1/2 inch, 2 inch, 2-1/2 inch and 3 inch diameters.

USE THIS CONVERSION CHART FOR FACE SELECTION

Type	Soft	Medium	Tough	Medium Hard	Hard	Extra Hard
Soft Rubber	S					
Wood	S	M		N		
Rubber		M				
Hard Wood			T			
Lead			T	N		
Plastic			T		H	
Rawhide		M	T	N	H	XH
Micarta					H	XH
Fibre					H	XH
Copper						XH

21.2.14 Trimmer's Hammer.

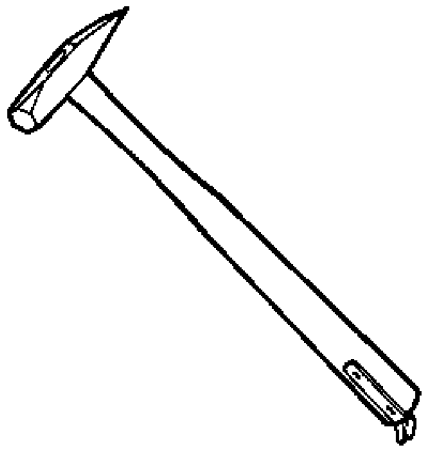

HTMT-282

The trimmer's hammer has a round flat face on one end of the head and has a tapered chisel face on the other end. A claw is attached on the end of the handle and is used for pulling tacks. It is used for installing tacks and brads.

21.2.15 Welder's Hammer.

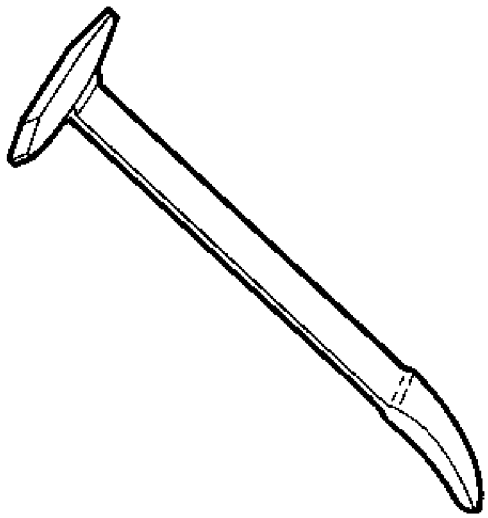

HTMT-283

The welder's hammer has one or two tapered chisel faces. Those having only one tapered face have a replaceable brush attached. The hammer face is used for chipping welds, while the brush is used for cleaning welds and brushing away the slag chipped from the weld.

21.2.16 Dead Blow Hammers.

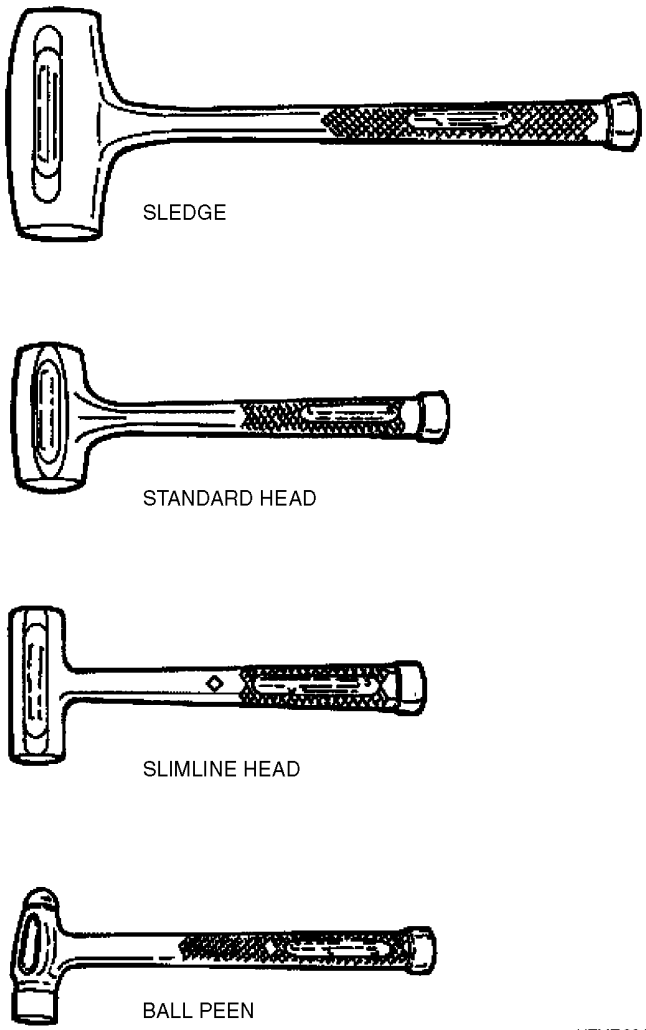

HTMT-284

The dead blow hammer is a shot-filled, rubber encased, single-piece hammer. It features a wrap-around grip and a flanged butt. Four basic types of dead blow hammers are currently in use. They are: the standard head, slimline head, sledge, and ball peen. Some advantages of the dead blow hammers are greater striking power, and the elimination of broken heads and splintered handles.

21.2.17 Mallets.

21.2.17.1 Carpenter's Mallet.

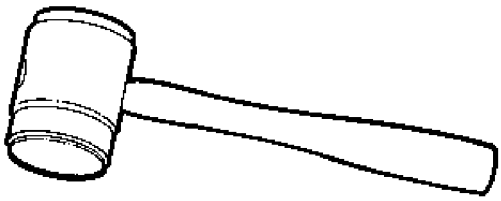

HTMT-285

The carpenter's mallet has a cylindrical wooden head often bound with thin metal bands for support. It is used for driving dowels, small stakes, wooden handled chisels and for forming and shaping sheet metal.

21.2.17.2 Rawhide Mallet.

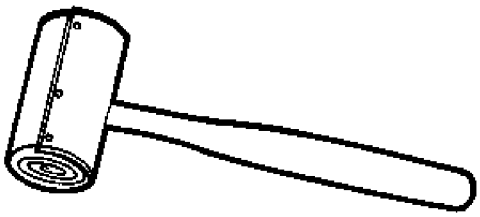

The rawhide mallet has a cylindrical head which is made by tightly wrapping and staking a sheet of leather. It is used for forming and shaping sheet metal.

21.2.17.3 Rubber Mallet.

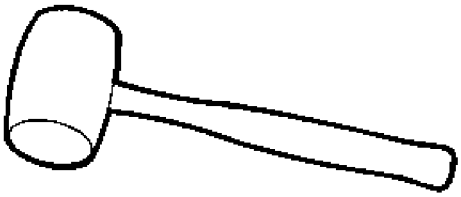

The rubber mallet has a cylindrical rubber head. It is used for forming sheet metal, driving dowels, and small stakes.

21.2.17.4 Tinner's Mallet.

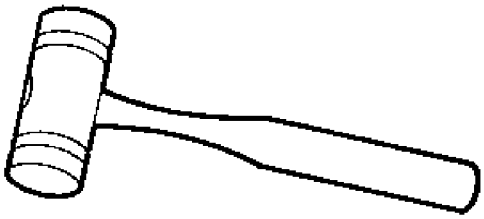

The tinner's mallet has a cylindrical wooden head which is from 1-1/4 to 3-1/2 inches in diameter and from 3 to 6 inches in length. It is used to form and shape sheet metal.

21.2.18 Mauls.

21.2.18.1 Railroad Track Maul.

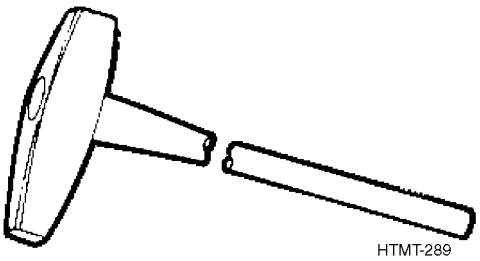

The railroad track maul has a flat faced tapered head which weighs about 10 pounds. They are used for driving railroad track spikes.

21.2.18.2 Wooden Maul.

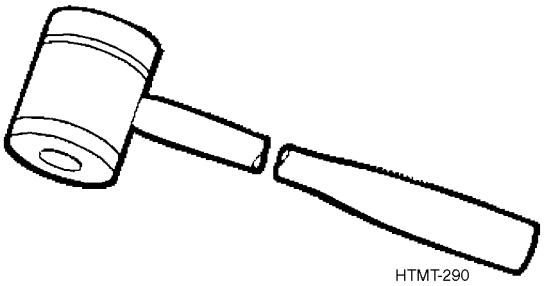

The wooden maul has a cylindrical head which is about 8 inches in diameter and about 10 inches long. It is used to drive wooden pickets, posts and stakes.

21.3 SAFETY.

WARNING

Never, never use an unsafe hammer. Before using, check for loose head or a cracked handle. Do not use handle as a pry bar, or to knock sharp edges together.

1. Inspect the faces of steel hammers for wear, dents, or chips. They can be dangerous if chips fly off.

2. Replace the hammer if these conditions are found.

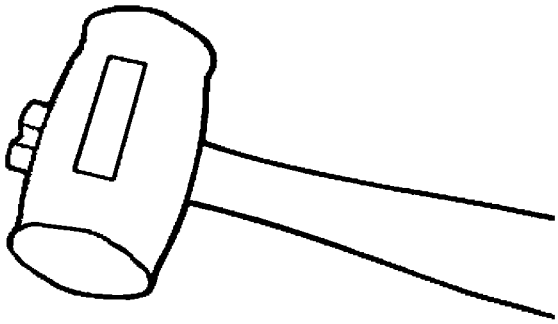

HTMT-291

3. Inspect copper, lead, plastic, or rawhide mallets for "mushrooming"

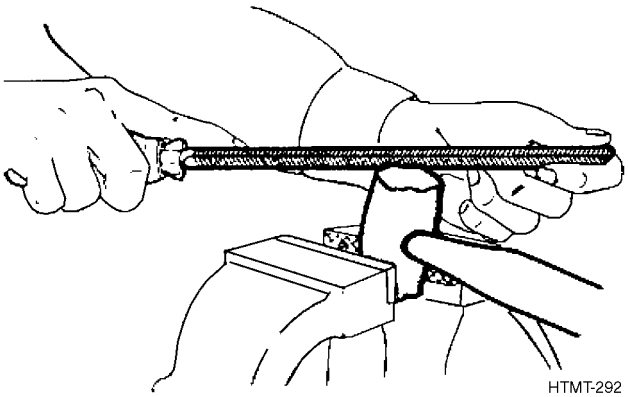

HTMT-292

4. File edges of copper, lead or plastic mallets down to the original shape.

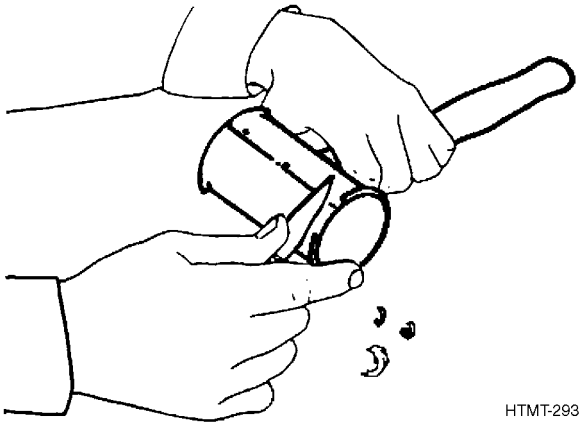

HTMT-293

5. Trim a rawhide mallet with a knife.

21.3.1 Specific Steps to Take.

1. Make sure handle (1) is tight in head (2). Do not tape a cracked handle.
   REPLACE IT.

2. Make sure wedges (3) are in handle (1), keeping head (2) tight on handle.
   USE ONLY CORRECT WEDGES.

3. Make sure striking face (4) and ball peen (5) are free of oil.

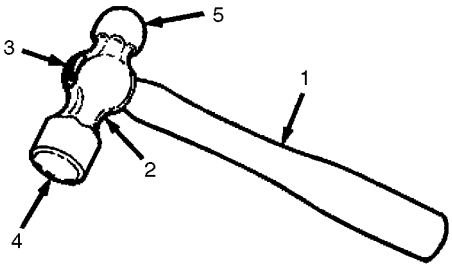

HTMT-294

21.4 USING HAMMERS.

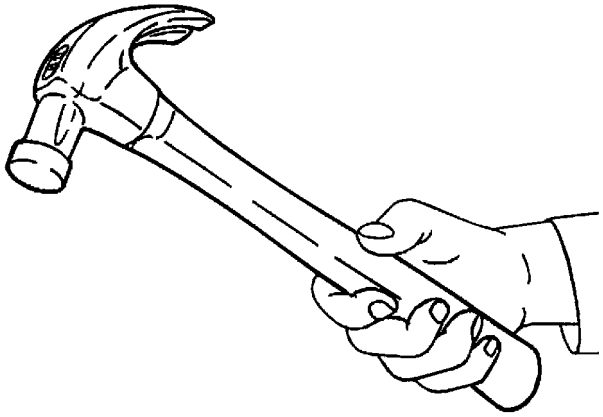

RIGHT

HTMT-295

The proper way to hold any hammer is near the end of the handle. The handle is shaped for gripping without slipping from your grasp at this position, and gives the best control and impact with least effort. Strike nail or tool squarely and on center to prevent the hammer from glancing off.

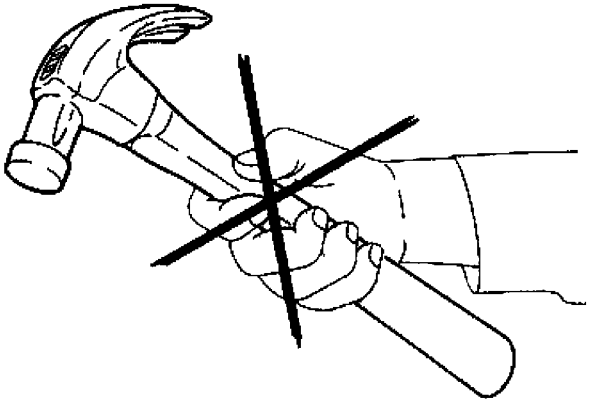

HTMT-296

The wrist and arm motion depends on the power of the impact required. Small nails require light blows almost entirely from a wrist motion. Heavy blows, needed to drive a large nail or other similar task, come from the wrist, forearm and shoulder.

21.4.1 Using a Carpenter's Hammer.

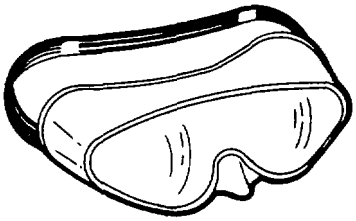

WARNING

Wear eye protection and watch the fingers.

CAUTION

- Never use a claw hammer on a steel punch or on hardened steel-cut or masonry nails. The face is too soft and could chip.
- Be sure to check for a loose head or a cracked handle before use.

The following set-up is established to provide practice driving nails successfully.

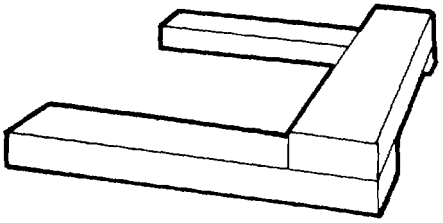

HTMT-298

1. Lay two pieces of wood parallel to each other. Place a third piece on top and align so that the edges are even.

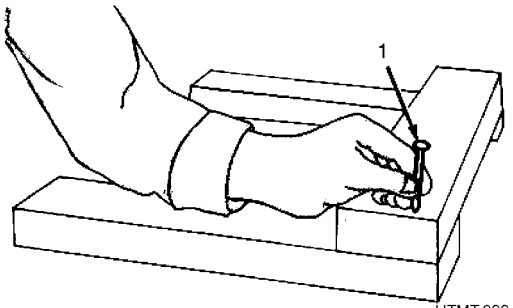

HTMT-299

2. Support a common nail (1) between thumb and first finger about halfway up the nail.

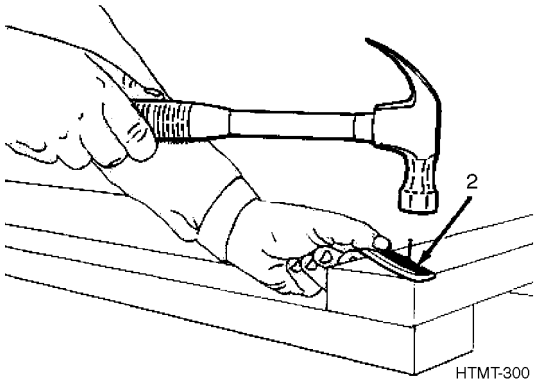

HTMT-300

NOTE

A piece of paper or a comb (2) can be used to hold small nails.

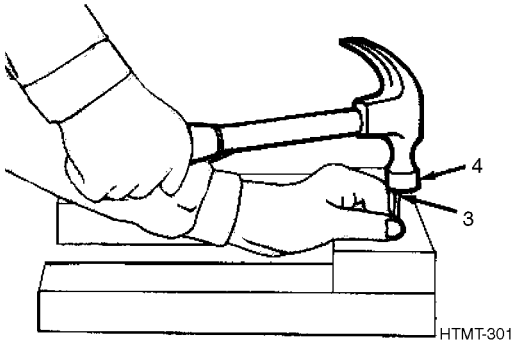

HTMT-301

3. Tap nail head (3) with hammer face (4) until the nail will remain standing by itself.

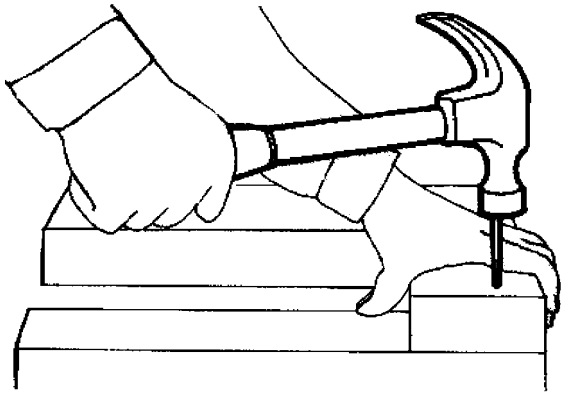

HTMT-302

4. Remove fingers and drive nail flush. Make sure the hand supporting the work is not in direct line with the hammer blows.

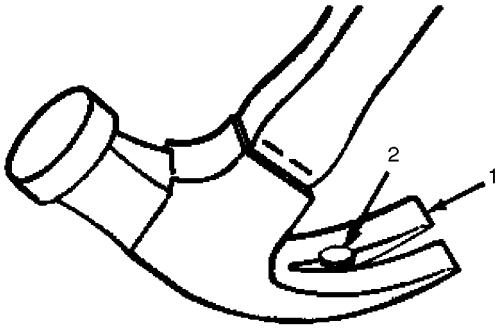

HTMT-303

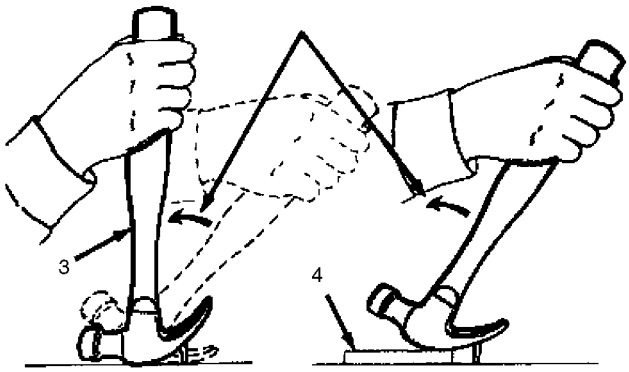

HTMT-304

1. The claw end (1) of the hammer is for pulling nails or prying boards. Slip the claw under the nail head (2) as far as it will go, to prevent bending the head up.

2. Pull the handle (3) to a vertical position to withdraw the nail.

3. For longer nails, place a block of wood (4) under the head for better leverage.

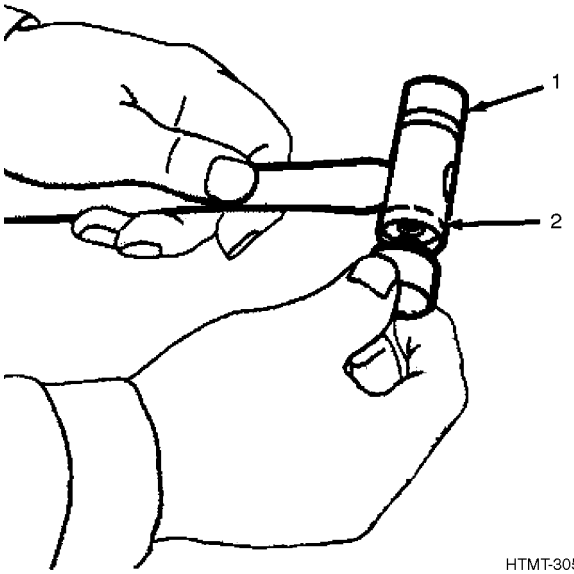

HTMT-305

NOTE

The following procedure is only one of many uses of a soft-faced hammer.

1. Make sure faces (1) are tight in holder (2).

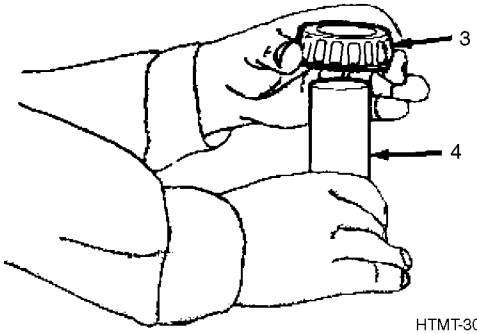

HTMT-306

2. Unwrap bearing (3) and center over shaft (4).

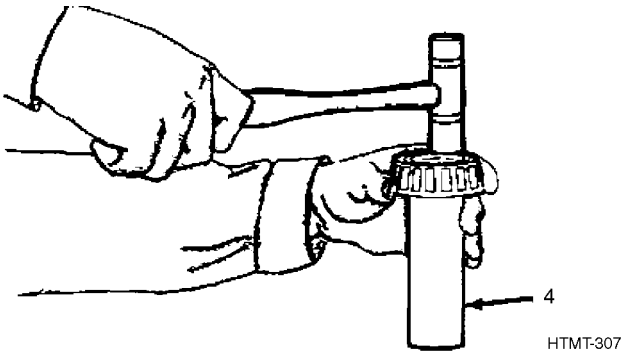

HTMT-307

3. While supporting bearing with left hand, use soft-faced hammer to tap in a circular motion until edge of bearing is flush with shaft (4).

21.4.2 Using a Mechinist's Ball Peen Hammer.

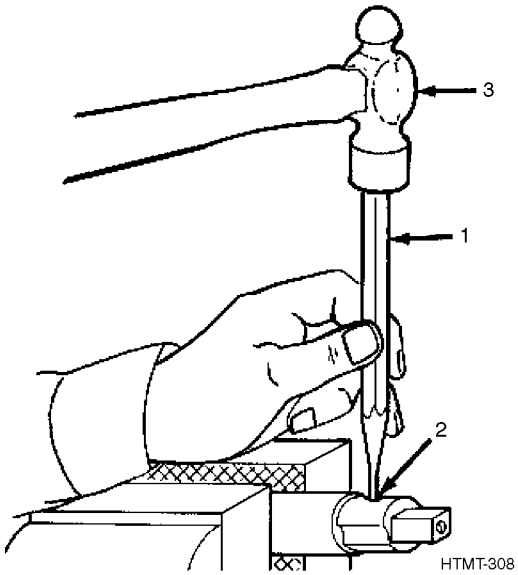

NOTE

The following procedure is one of many uses of the machinist's hammer.

1. To remove a spring pin from a shaft, select a drift punch about the same diameter as the pin and a machinist's hammer having a face larger than the punch head.

2. Hold punch (1) in your left hand centered over pin (2), tap punch lightly with hammer (3). This should move the pin.

NOTE

It may be necessary to apply penetrating oil to the pin before it will move.

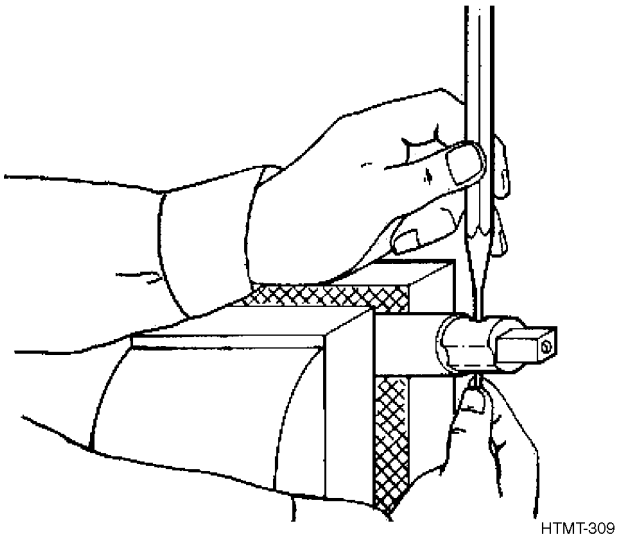

3. Catch the pin in your right hand before it falls out of the shaft

NOTE

After the pin is about halfway out of the shaft, you should not hold the punch.

21.5 CARE OF HAMMERS.

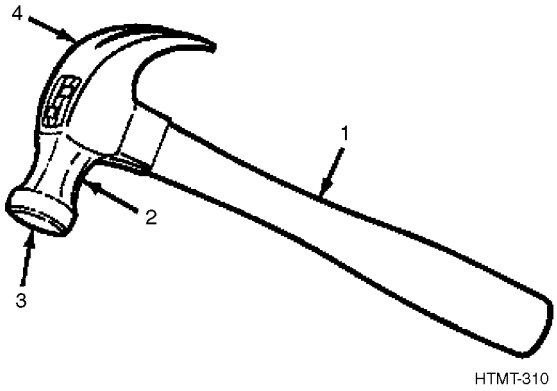

1. Check for cracks in handle (1). Replace handle if cracked. Check for loose head (2). Replace missing or makeshift wedges to be sure head is tight. If not tight, replace handle.

2. Periodically rub a small amount of linseed oil into the wood handles (1) to prevent the wood from drying out and shrinking.

3. Replace hammer if it has a worn or chipped face (3) or claw (4).

4. Lightly lubricate metal parts when storing the hammer for a lengthy period.

5. Wipe oil and grease from rubber mallets to prevent damage to rubber.

21.5.1 Care of Inserted Face Hammers.

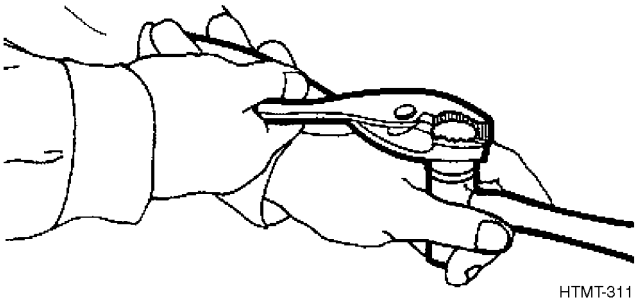

1. Broken or chipped faces may be removed by turning in a counterclockwise direction.

NOTE

Use a pair of pliers or a rag on broken faces to prevent scraping your hands.

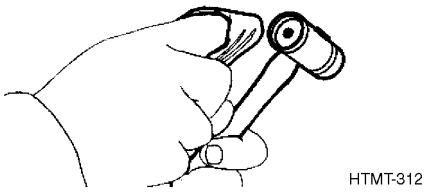

2. Wipe out face seat on holder with a clean rag. Install new face by turning in a clockwise direction.

3. If holder is broken or cracked, remove both faces by turning in a counterclockwise direction.

4. Obtain a new holder and install faces by turning in a clockwise direction.

21.6 REPLACING THE HANDLE.

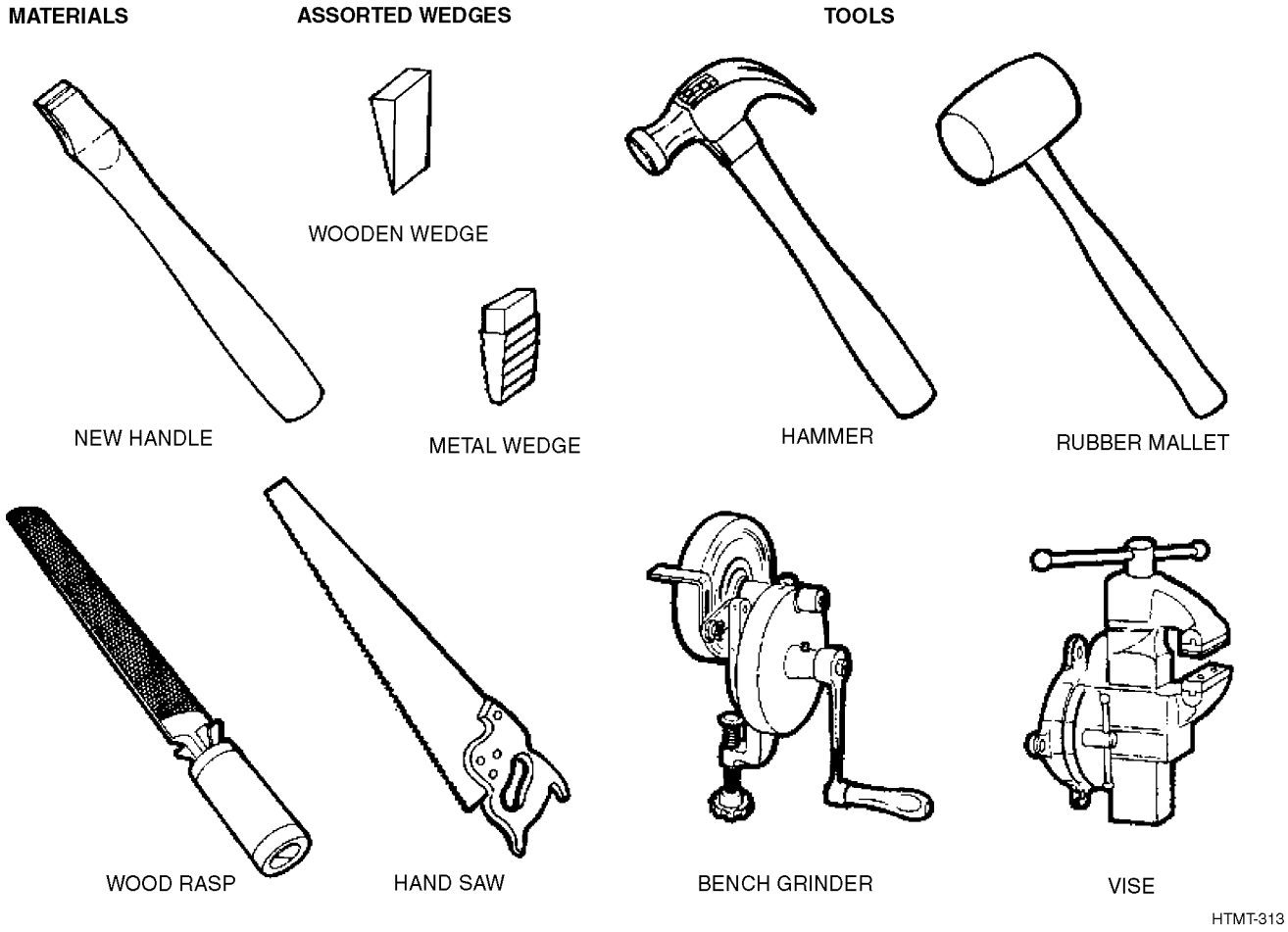

The above items are the basic materials required to replace the handle on a typical carpenter's hammer.

21.6.1 Removing Old Hammer Handle.

1. If the handle is split or broken, remove it from the head.

2. If the handle is too tight to pull loose from the head, proceed as follows: Place hammer in vise.

   Saw off handle (1) close to head (2).

   Drive the remaining handle out through the large end of the head (3) using drift pin. Save the wedges.

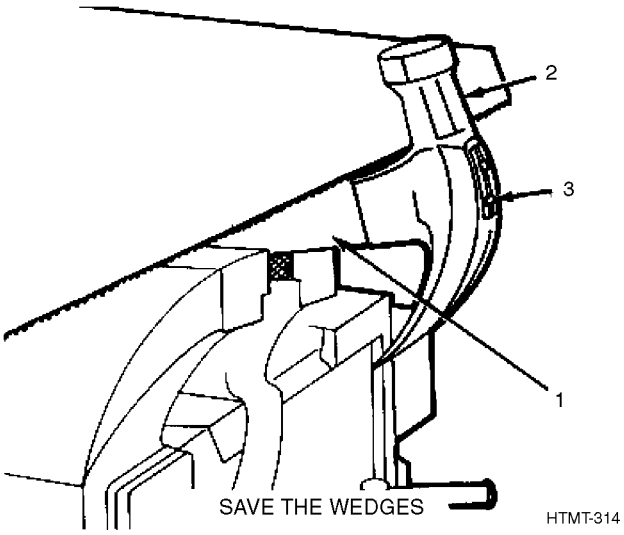

21.6.2 Installation of New Handle.

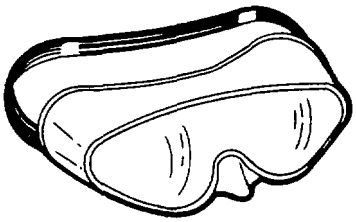

WARNING

Wear eye protection and watch the fingers.

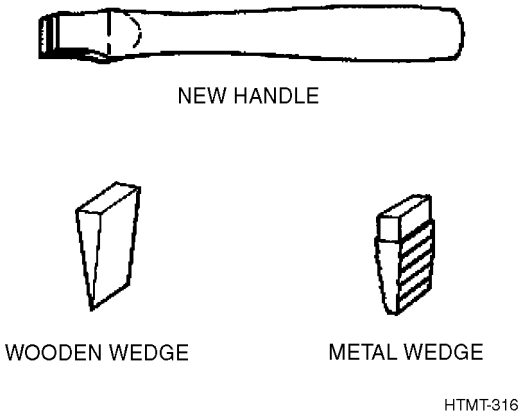

1. Obtain new handle and wedges.

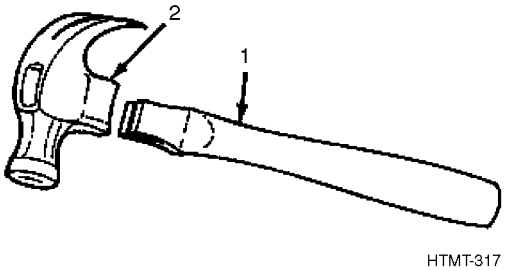

2. Insert handle (1) in head (2).

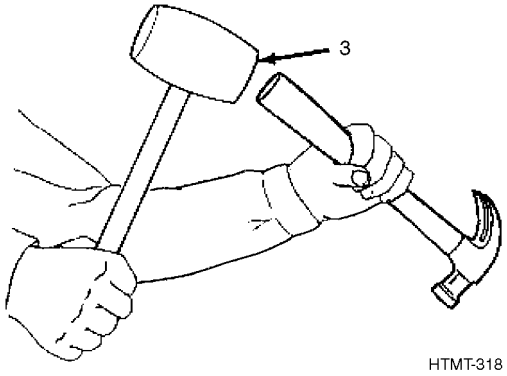

3. Seat handle in head with a rubber mallet (3).

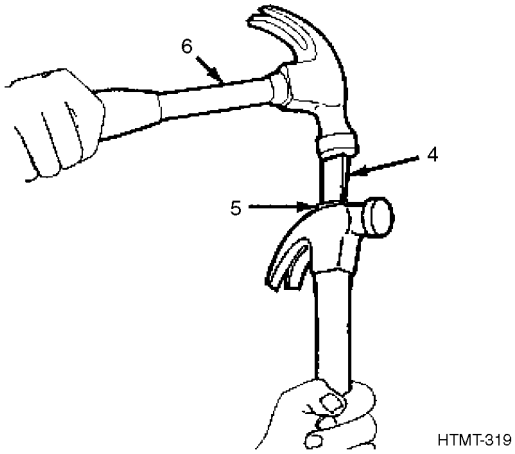

4. Drive wooden wedge (4) in handle face (5) with hammer (6).

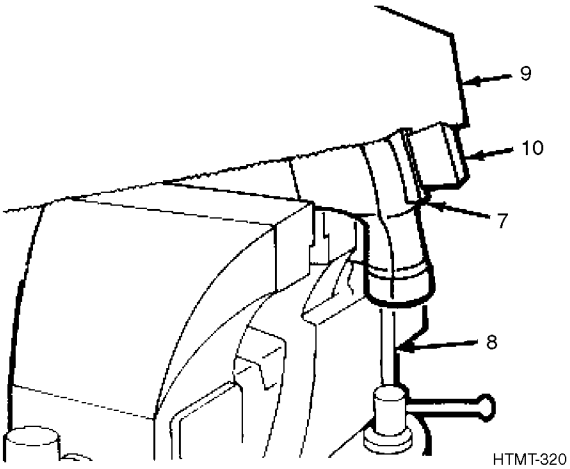

5. Place hammer (7) in vise (8). Using handsaw (9), remove projecting end of wedge (10).

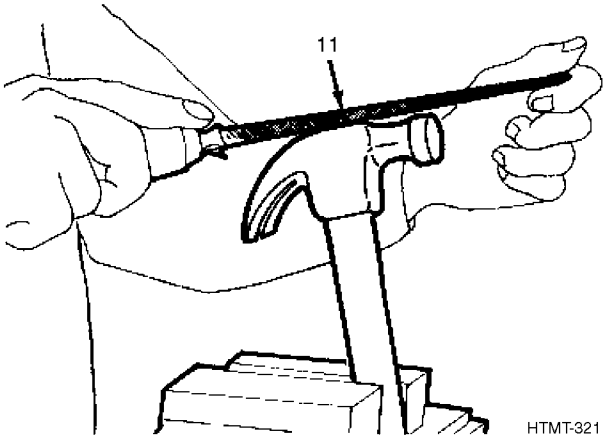

6. Remove excess portion of wedge using wood rasp (11).

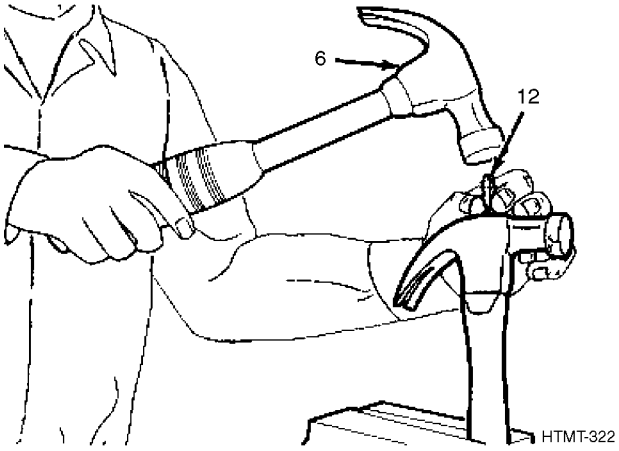

7. Select metal wedge (12) and drive into wooden wedge with hammer (6).

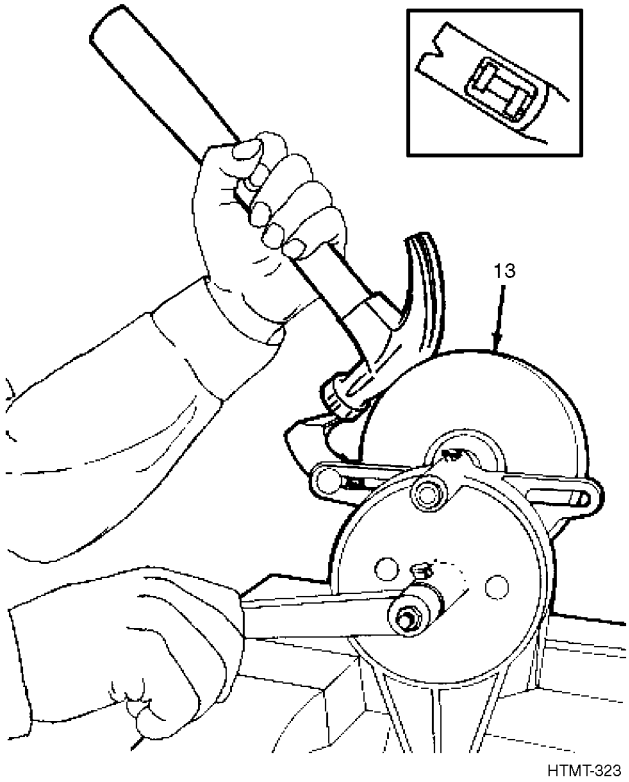

8. Remove excess portion of wedge using a bench grinder (13). Check handle. If it's tight, the task is complete. If handle is loose, repeat procedure.

CHAPTER 22
SCREWDRIVERS

22.1 HOW TO CHOOSE AND USE THEM.

Types and Uses, Paragraph 22.2, provides you with a list of some of the types of screwdrivers. These pages should help you select the right screwdriver to do the job. Using, Paragraph 22.4, tells you how to use the screwdriver to perform the desired function. Care of Screwdrivers, Paragraph 22.5, tells you how to care for the items.

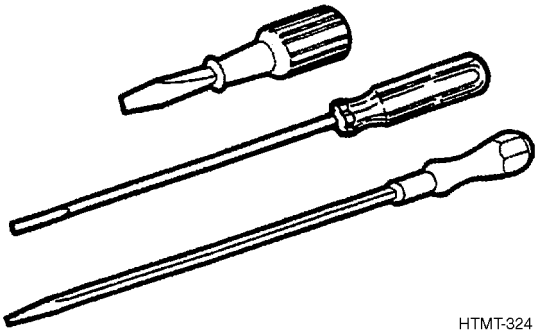

HTMT-324

22.2 TYPES AND USES.

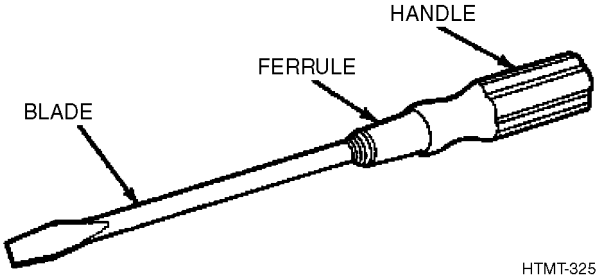

HTMT-325

Screwdrivers are available in many different shapes, sizes, and materials. Screwdrivers are used for driving or removing screws or bolts with slotted, recessed, or special heads.

22.2.1 Common Screwdrivers.

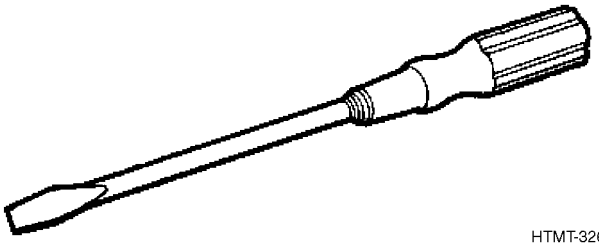

HTMT-326

The common screwdriver has a round steel blade with a wood or plastic handle, usually fluted for a good grip. Integral blade screwdrivers are used for heavy-duty work.

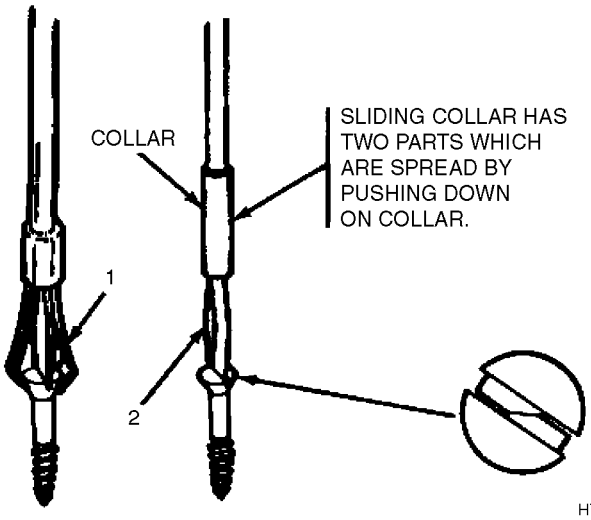

HTMT-327

Some common screwdrivers have a screw-holding feature. These are used for working in close quarters, overhead, and hard to reach places. The two most common types are the clip (1) and sliding collar (2). After the screw has been firmly started, switch to a conventional screwdriver to complete the job.

NOTE

Do not use sliding-cover, split-type screwdrivers for final tightening of screws.

HTMT-328

Close quarter or stubby common screwdrivers are used for working in close quarters where conventional screwdrivers will not fit.

HTMT-329

Common cabinet screwdrivers have a thin, round blade and are used to reach and drive or remove screws in deep, counterbored holes.

HTMT-330

Other common heavy-duty screwdrivers have square blades so a wrench can be used to turn them.

22.2.2 Cross-Tip Screwdrivers.

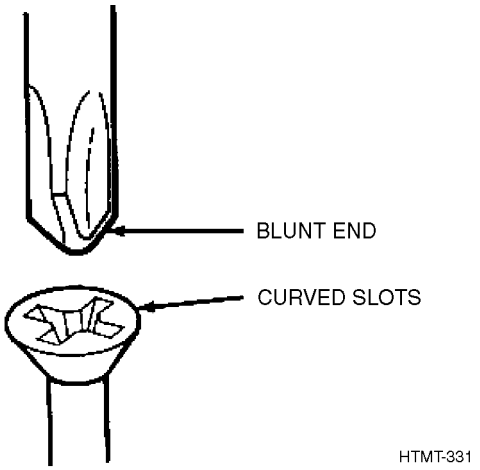

The tip of a cross-tip screwdriver is shaped like a cross so that it fits into cross-tip screwdrivers. Cross-tip screws have two slots which cross at the center. These screwdrivers are made with four different sized tips. Cross-tip screwdrivers also have different length blades ranging from 1 inch to 8 inches.

22.2.3 Cross-Point Screwdrivers.

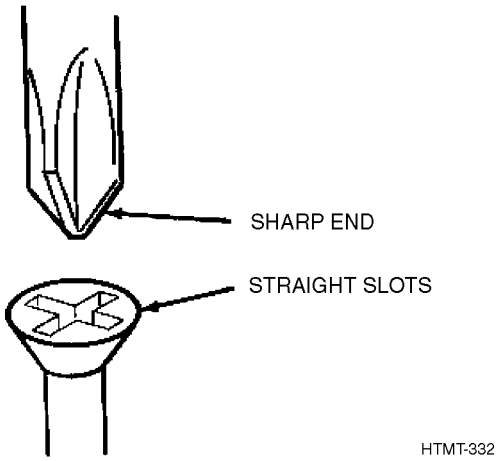

Cross-point screwdrivers are similar to the cross-tip. The cross-point slots meet at an exact right at angle at their intersection. These screwdrivers are issued in 3 to 8-inch sizes.

22.2.4 Clutch Head Screwdrivers.

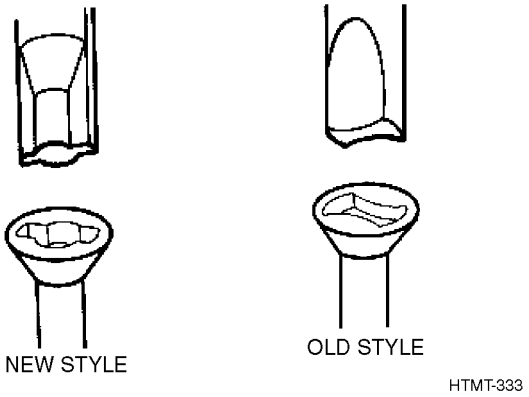

Clutch head screwdrivers are used to drive clutchbit screws. These screws have recessed heads and are commonly called butterfly or figure-eight screws. There are two styles of clutch heads, old style and new style.

22.2.5 Offset Screwdrivers.

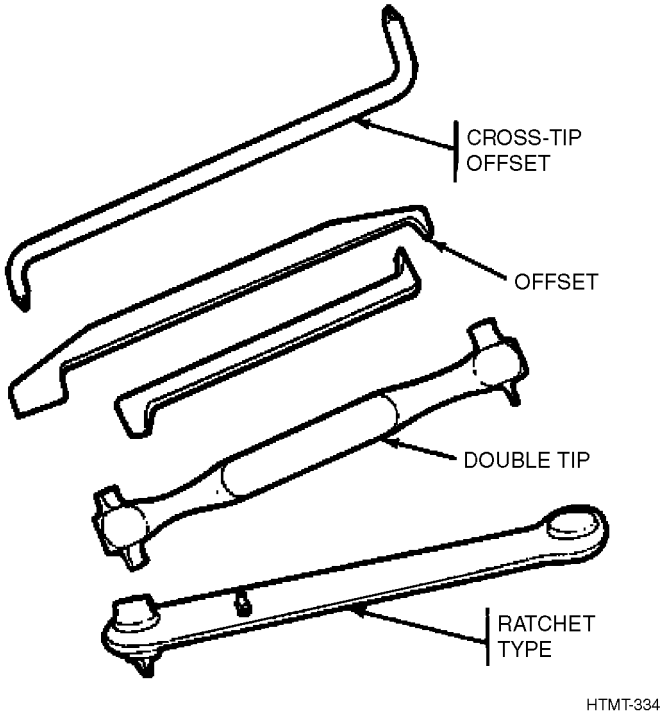

Offset screwdrivers are used to drive or remove screws that cannot be lined up straight with common screwdrivers, or are located in tight corners. Some offset screwdrivers are made with two blades, one of a different size at each end. Others are ratchet-type offset, which are reversible for working in tight spots and allow the screw to be driven without having to remove the tip from the Screw head. A double-tip offset screwdriver has four blades.

22.2.6 Ratchet Screwdrivers.

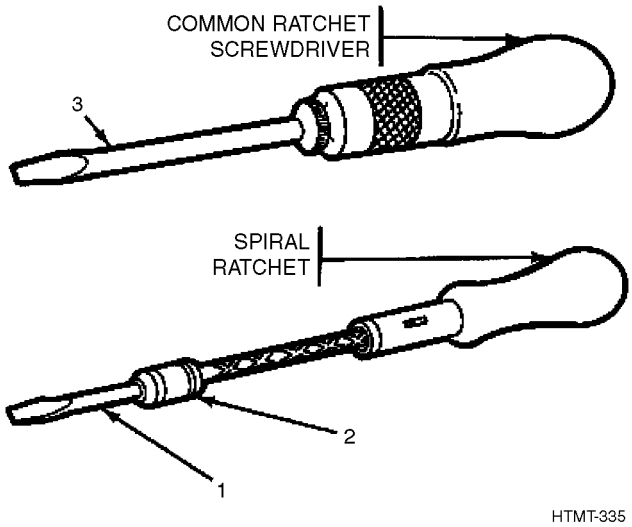

Ratchet screwdrivers are used to drive or remove small screws rapidly. The spiral ratchet screwdriver automatically drives or removes screws. It can be adjusted to turn left, right, or locked to act as a common screwdriver. Some spiral ratchets have a spring in the handle which automatically returns the handle for the next stroke. Another style of ratchet screwdriver has a knurled collar for rotating the blade with your fingers. The spiral type has separate blades (1) that are inserted in the chuck (2). The common ratchet screwdriver has one integral blade (3).

22.2.7 Screwdriver Bits.

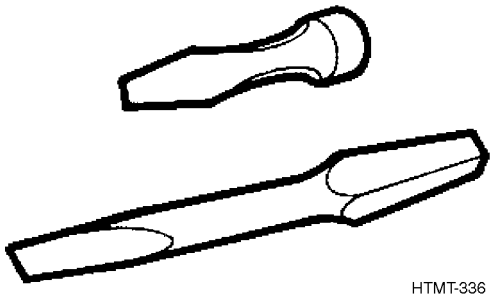

A screwdriver bit is a screwdriver blade with a square, hex, or notched shank so that it can be used with other tools:

- Breast drill
- Ratchet bit brace
- Socket wrench handle

22.2.8 Jeweler's Screwdriver.

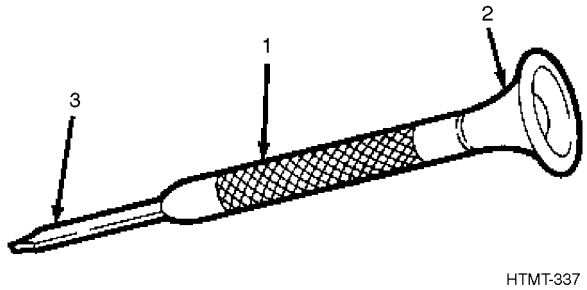

Jeweler's screwdrivers are made for driving and removing small size screws. They usually have knurled handles (1), and a swivel end finger rest plate (2). The tips (3) range from 0.025 inch to 0.1406 inch wide. Some jeweler's screwdrivers have removable blades.

22.2.9 Flexible Screwdrivers.

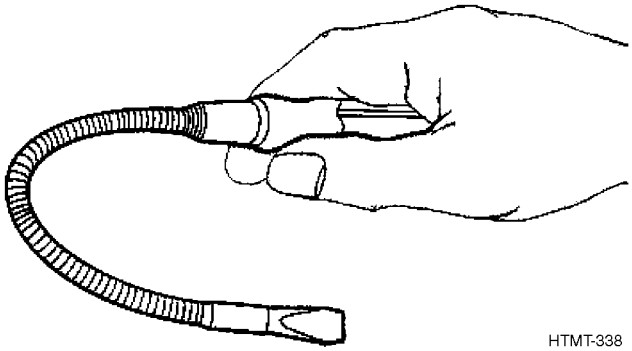

A flexible screwdriver has a spring steel blade which bends, allowing the user to get around flanges, shoulders, and other parts to drive and remove screws.

22.2.10 Radio and Pocket Screwdrivers.

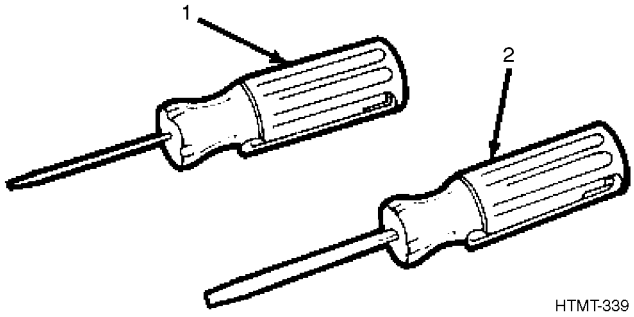

A radio screwdriver (1) has a round blade that is 1-1/2 inches long. Its use is restricted to very small screws generally used in the construction of radio chassis. The pocket screwdriver (2) is also small, with a square blade that is 1-3/4 inches long. Both have pocket clips.

22.2.11 Screw Starter or Gimlet.

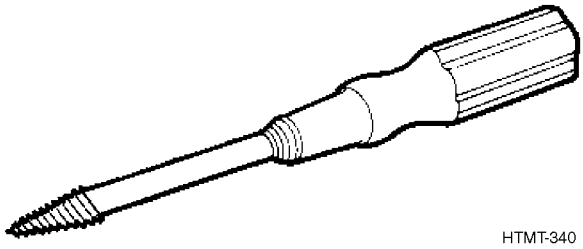

A screw starter or gimlet has a threaded tip. It is used to make a pilot hole in wood for wood screws.

22.3 SAFETY.

WARNING

- Handle the screwdriver carefully. A greasy handle could cause an accident.
- Do not carry a screwdriver in your pocket unless it has a pocket clip.
- Do not use a screwdriver for prying, punching, chiseling, scoring, or scraping.
- Do not use a screwdriver near a live wire, to check a storage battery, or to determine if an electrical circuit is live.
- Do not hold the work in one hand while using the screwdriver with the other. If the screwdriver slips out of the slot, you will be most likely to put a gash in your hand.

22.4 USING SCREWDRIVERS.

NOTE

The proper way to select and use a screwdriver is to always match the size of the screwdriver to the job and always match the type of screwdriver to the head of the screw.

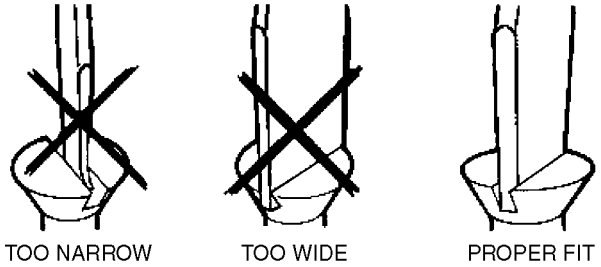

HTMT-341

22.4.1 Preparing the Work Surface.

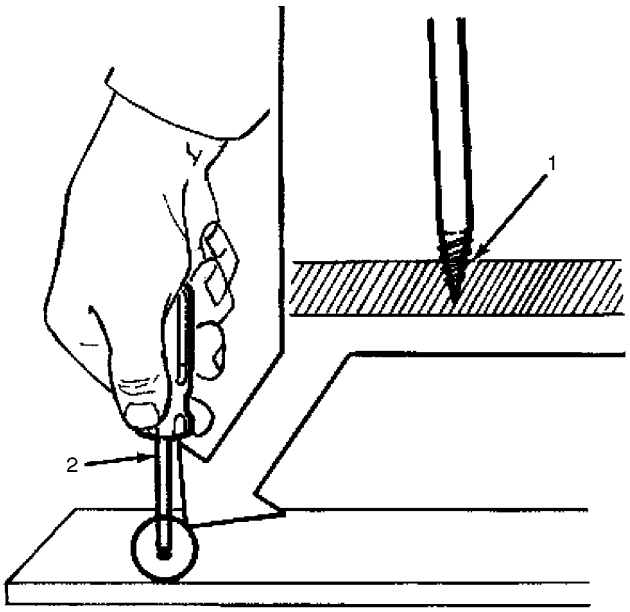

HTMT-342

1. Before attempting to drive a screw into wood, you first make a pilot hole (1) using a screw starter (gimlet) (2), an awl, a nail, or a drill.
2. Before attempting to drive a screw into sheet metal you should make a pilot hole using a drill. However, light-weight sheet metal can be pierced with a nail or punch.

22.4.2 Using a Screwdriver.

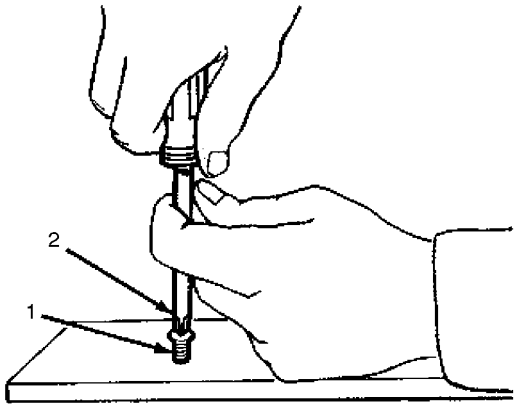

HTMT-343

1. Insert the screw (1) in the pilot hole. Insert the screw-driver tip (2) in the screw slot of the screw as shown.
2. Keep the screwdriver in line with the screw as shown. You may want to use your other hand to keep the blade steady.

3. Turn clockwise to screw in, counterclockwise to unscrew.

4. Do not use a pliers to turn the screwdriver when driving or removing screws that are hard to turn. For hard-to-turn screws, use a square blade screwdriver designed for heavy-duty work and a wrench which properly fits the blade.

22.4.3 Using an Offset Screwdriver.

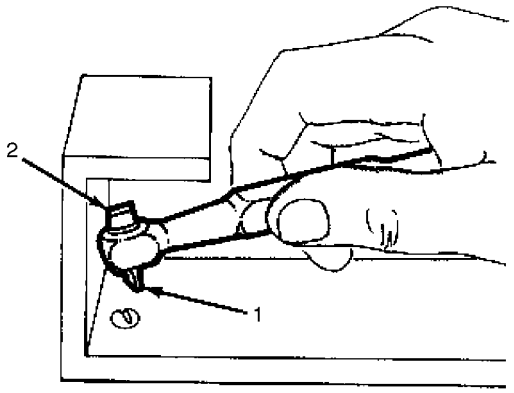

HTMT-344

1. Select the correct style and tip size for the screw being used.

2. Insert the tip (1) in the screw slot.

3. In tight places you may have to alternate tips (1 and 2) to complete turning the screw.

22.4.4 Using an Offset Ratchet Screwdriver.

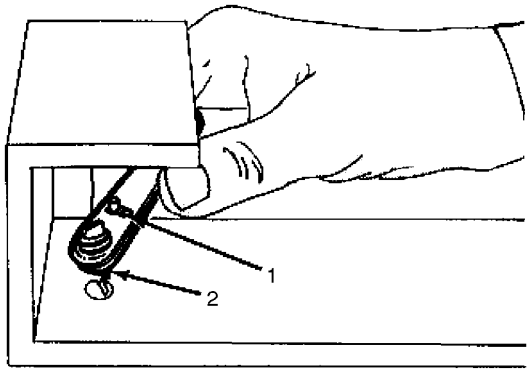

HTMT-345

1. Select the correct size tip for the screw head.

2. Set the action selection lever (1) in the stock of the screwdriver for installation of a screw as shown. Reverse the lever for removal of a screw.

3. Insert the tip (2) in the screw slot of the screw head. Pull the lever to the right or left, for installation or removal of the screw. This allows the screw to be driven without having to remove the tip from the screw head.

22.4.5 Using a Spiral Ratchet Screwdriver.

NOTE

These screwdrivers come in several styles. Some have the different size bits stored in the handle.

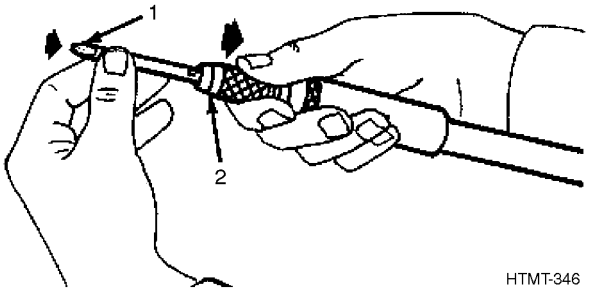

HTMT-346

1. Select the correct size tip for the screw head being used.

2. Install tip (1) in screwdriver by pulling back on metal shell (2). When tip is seated, release the shell to lock it into place.

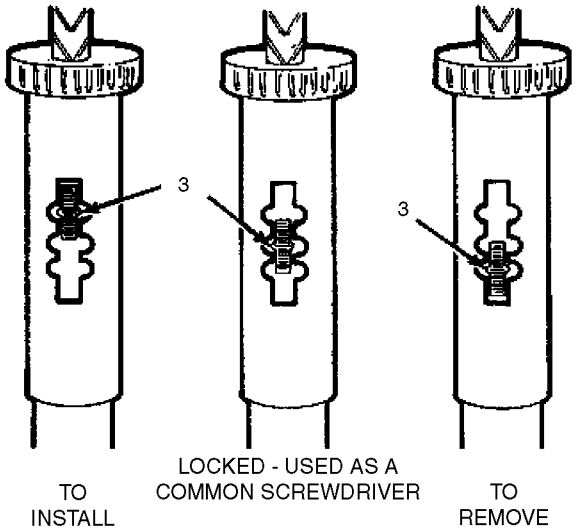

HTMT-347

3. Set selector lever (3) as shown.

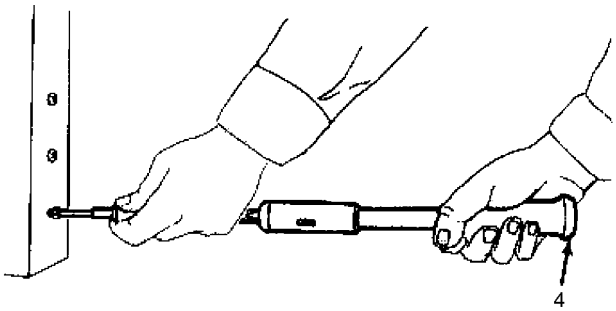

HTMT-348

4. Insert the tip in the screw slot. Hold the screwdriver blade as shown. Move handle (4) back and forth to install or remove a screw.

22.4.6 Using a Jeweler's Screwdriver.

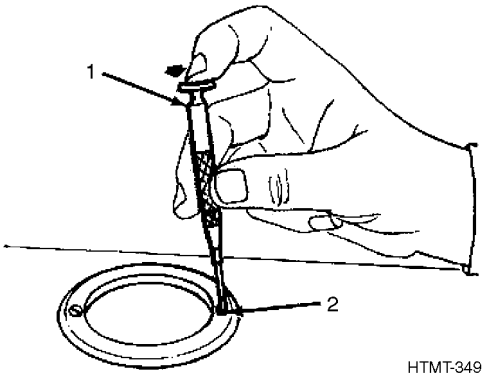

HTMT-349

1. Hold screwdriver as shown, with forefinger on rotating head (1).

CAUTION

Be sure the screwdriver fits the screw. If the screw is too large for the screwdriver tip, the tip will be damaged.

2. Insert the tip of the screwdriver in the screw slot (2). Turn the screwdriver, between the thumb and middle finger, clockwise to screw in, counterclockwise to unscrew.

22.5 CARE OF SCREWDRIVERS.

1. When a screwdriver becomes nicked, or the edges become rounded, or when other damage occurs so that it does not fit a screw slot, it can be reground or filed. The sides must be parallel to keep the tool from lifting from the screw slot and the tip must be square, at right angles to the sides and to the blade.

2. Do not expose a screwdriver to excessive heat, as it may reduce the hardness of the blade.

3. Replace a screwdriver that has a worn or damaged handle or rounded tip.

4. After use, wipe screwdriver clean and place in rack or tool box. For long-term storage, apply rust-preventive compound to all metal surfaces and store in a dry place.

5. Screwdrivers used in the shop are best stored in a rack. This way the proper selection of the right screwdriver can be quickly made and fewer injuries will result.

6. A poor fitting screwdriver will damage the screw head, slip off the screw, and cause personal injury. Use a screwdriver that has parallel sides and exactly fits the screw slot.

7. Never pound on a screwdriver with a hammer. Do not use a screwdriver as a chisel.

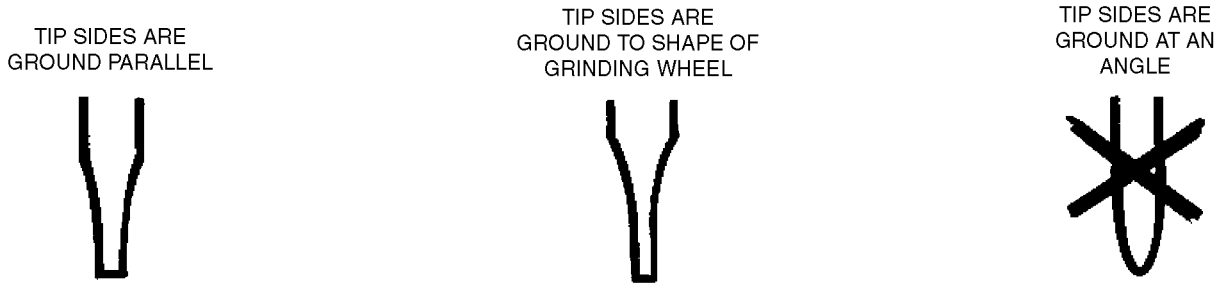

HTMT-350

CHAPTER 23
MANUAL DRILLS

23.1 HOW TO CHOOSE AND USE THEM.

Types and Uses, Paragraph 23.2, provides you with a list of some of the types of drills. These pages should help you select the right drill to do the job. Using, Paragraph 23.3, tells you how to use the drill to perform the desired function. Care of Manual Drills, Paragraph 23.5, tells you how to care for the items.

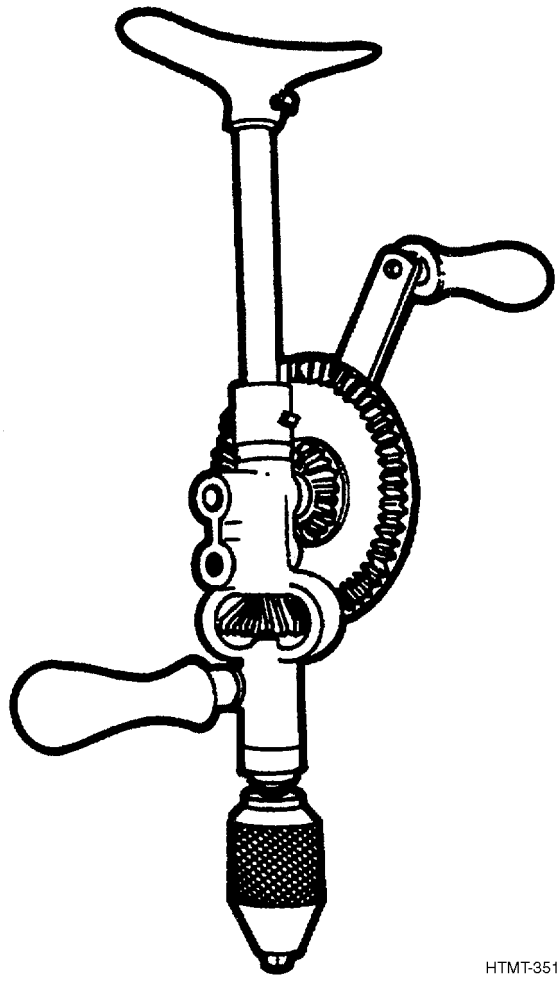

HTMT-351

23.2 TYPE AND USES.

23.2.1 Brace Drill.

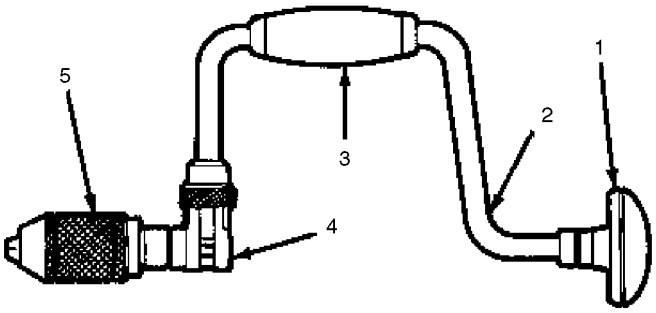

HTMT-352

The brace drill is made up of the following parts: head (1), crank (2), crank handle (3), ratchet mechanism (4), and chuck (5). The brace is used to drill holes in wood and with a screw-driver bit, remove and install screws.

23.2.2 Breast Drill.

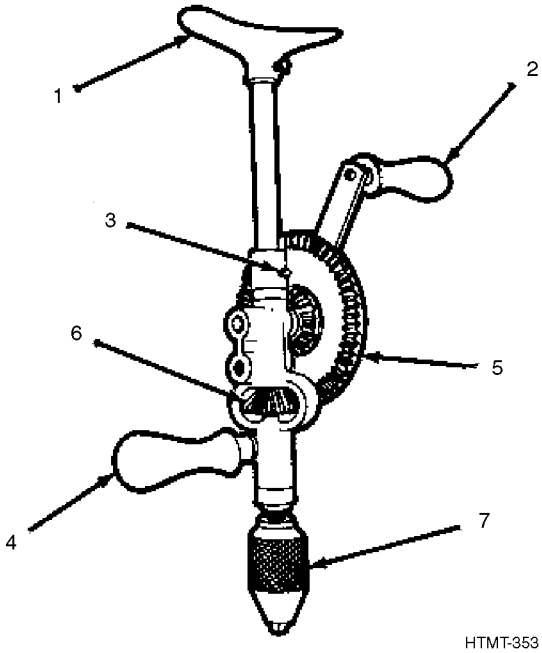

HTMT-353

The breast drill is made up of the following parts: breast plate (1), drive handle (2), speed shifter (3), side handle (4), speed gears (5), pinion gears (6), and chuck (7). The adjustable breast plate provides a base for the user to lean against while using the drill. The speed shifter provides a means of selecting high speed or low speed. This allows the operator to start a

hole at slow speed, 1:1 ratio, preventing marring of the surface, then shifting to high speed, 3-1/2:1 ratio, to finish drilling the hole. To change from low speed to high speed, move the drive handle and speed gears from the bottom hole to the top hole. High speed position is illustrated. Some drills have a slot instead of two holes.

The side handle provides a way to steady the drill and insure that the bit is boring a straight hole. The speed gears determine the speed at which the drill rotates. They are connected through linkage to the pinion gears. The pinion gears turn the chuck and drill. The breast drill is used to drill holes in wood, plastic, concrete, and small gage sheet metal.

23.2.3 Hand Drill.

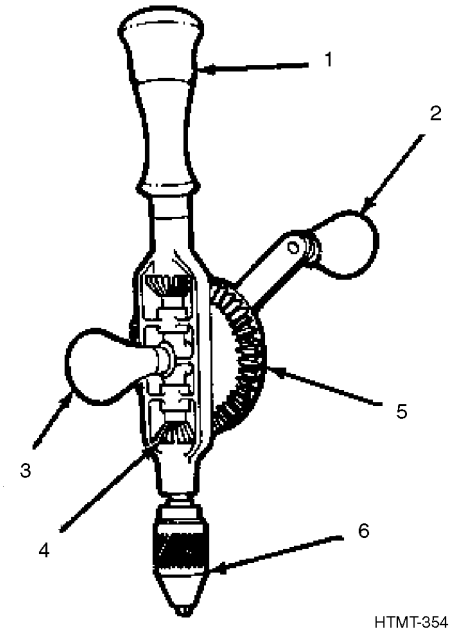

The hand drill is made up of the following parts: handle (1), drive handle (2), side handle (3), pinion (4), gear wheel (5) and chuck (6). The handle provides a storage area for drill bits. The side handle may be used to steady the drill when drilling in soft wood. The pinion turns the chuck and drill. Through mechanical linkage, the gear wheel transfers the driving force from the drive handle to the chuck. Hand drills are used to drill holes in wood and sheet metal.

23.3 USING A BRACE DRILL.

NOTE

The following procedure is for a bit of a fixed size from 1/4 inch up to a 1 inch maximum.

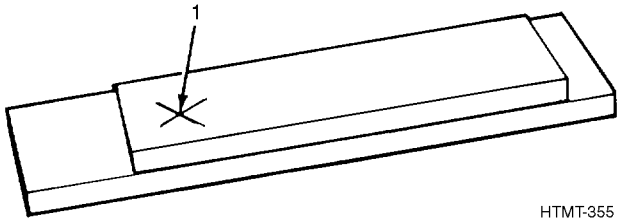

1. Mark (1) with a pencil where hole is to be drilled.

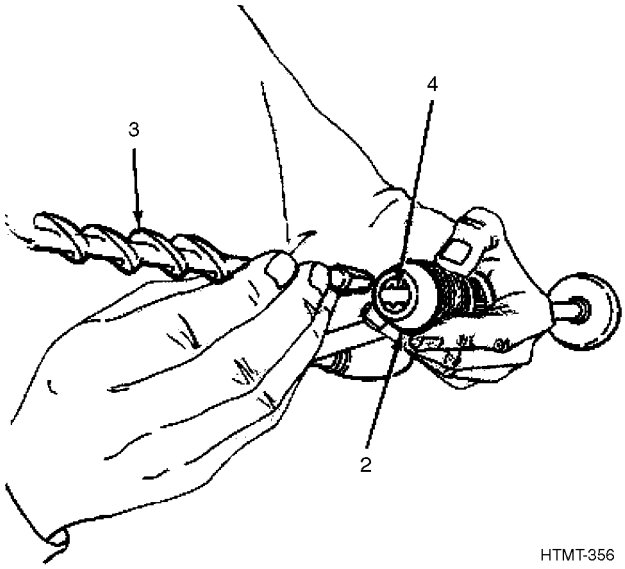

2. Open chuck (2) and insert bit (3) between jaws (4). Tighten chuck (2), securing bit (3).

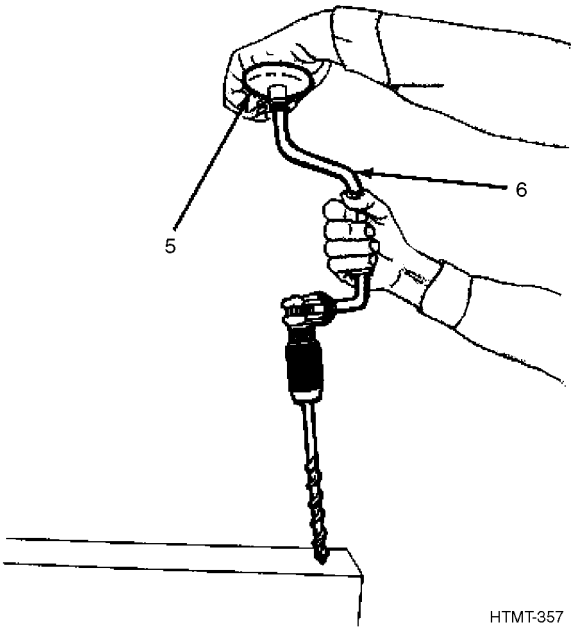

3. Center bit over pencil mark. Push down on head (5) and turn crank (6) until bit goes through the board.

NOTE

Ratchet mechanism (7) may have to be set.

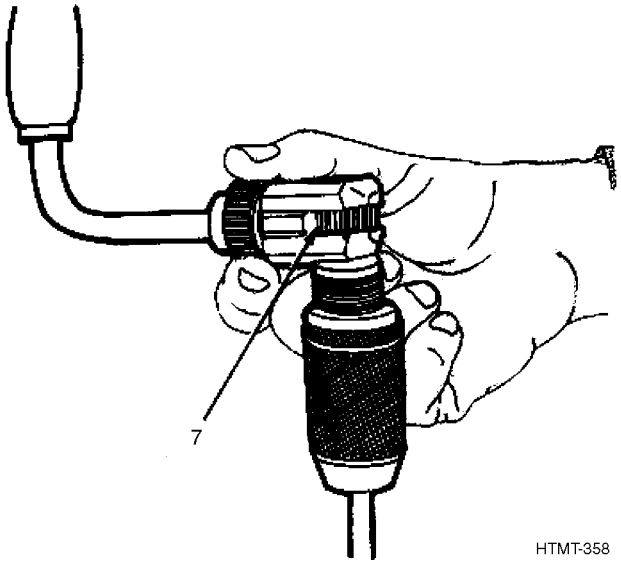

4. Reverse the ratchet mechanism (7), then turn crank and pull up on head to remove bit.

5. Open chuck and remove bit. Close chuck.

23.4 USING AN EXPANSIVE BIT.

NOTE

Expansive bits are available in two sizes, one from 5/8 inch to 1-3/4 inches and the other from 7/8 to 3 inches.

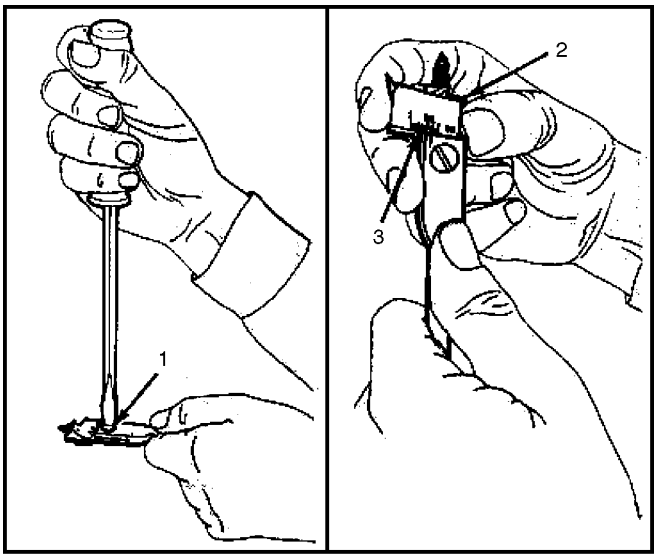

1. Loosen retaining screw (1). Slide adjustable blade (2) to the desired width using built-in scale (3) or a 6-inch machinist's rule.

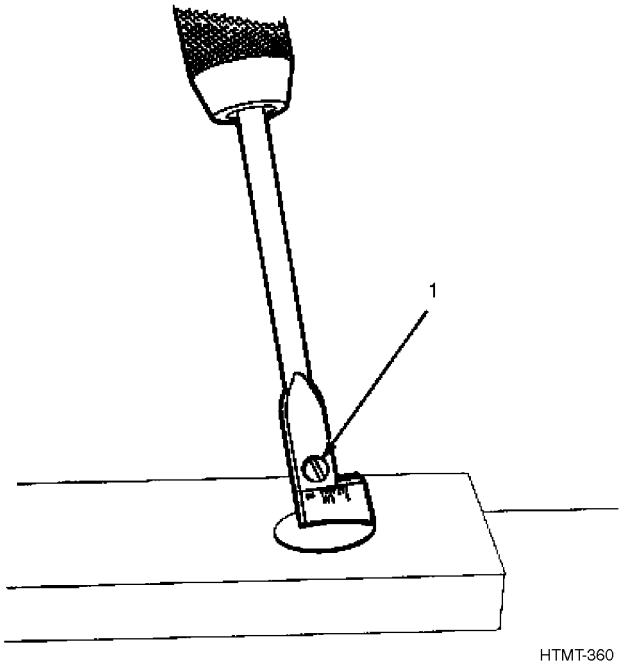

2. Tighten retaining screw (1) and refer to Drill, Paragraph 23.3, steps 1 through 5.

23.5 CARE OF MANUAL DRILLS.

Apply a light coat of oil to all metal surfaces. With a rag, clean gear teeth of dirt, wood and metal shavings and apply a light coat of oil. Hang manual drills on a rack or store in a safe, dry place.

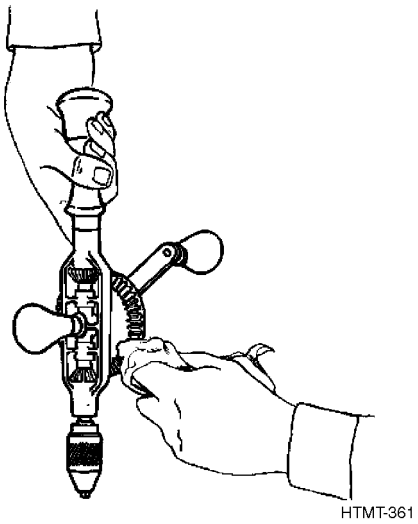

CHAPTER 24
SCREW AND TAP EXTRACTORS

24.1 HOW TO CHOOSE AND USE THEM.

Types and Uses, Paragraph 24.2, provides you with a list of some of the types of extractors. These pages should help you select the right extractor to do the job. Using a Spiral Tapered Screw Extractor, Paragraph 24.3, tells you how to use the extractor to perform the desired function. Care of Extractors, Paragraph 24.4, tells you how to care for the items.

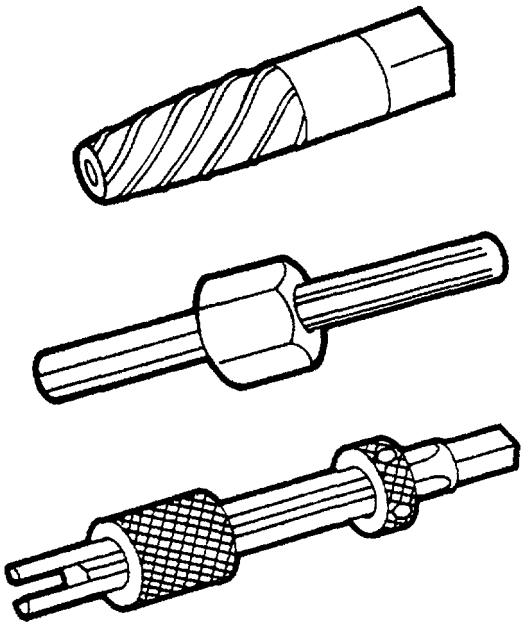

HTMT-362

24.2 TYPES AND USES.

24.2.1 Screw Extractors. Screw extractors are used to remove broken screws without damaging the threads or surrounding material. There are two basic types of screw extractors, the straight-flute type and spiral-tapered type.

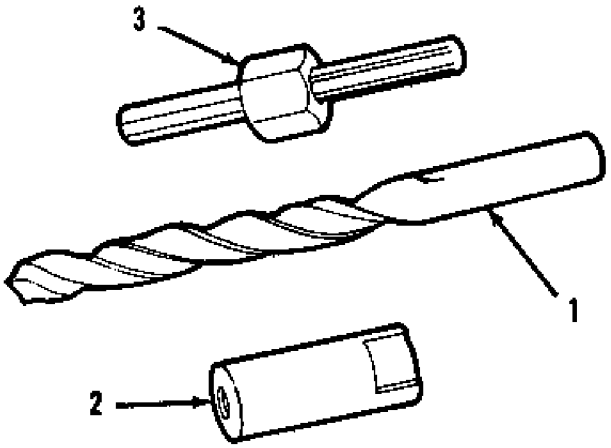

HTMT-363

The straight-flute type requires the following tools to drill a pilot hole in the screw: a twist drill (1), a drill guide (2), and a turn nut (3).

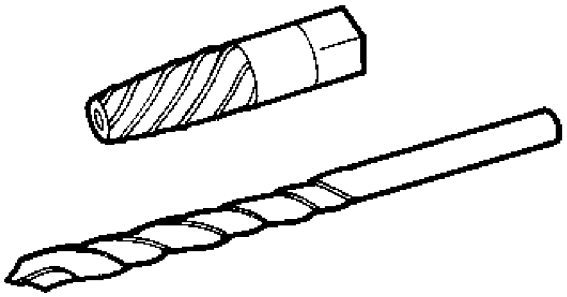

HTMT-364

The spiral-tapered type requires a twist drill for drilling a pilot hole.

24.2.2 Tap Extractor.

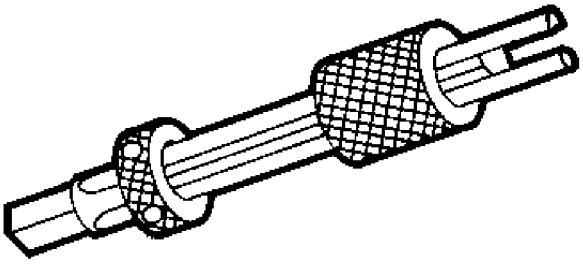

HTMT-365

The tap extractor is usually of the flute type and requires the use of a wrench to turn the tap. It is used for removing taps with no external area.

24.3 USING A SPIRAL TAPERED SCREW EXTRACTOR.

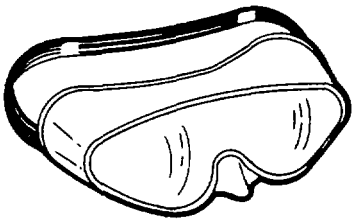

WARNING

Wear proper eye protection.

NOTE

The following task is not the only use of a screw extractor.

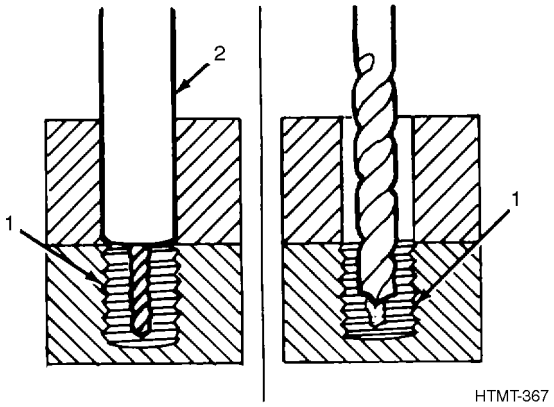

1. Drill a hole in the broken screw (1). Use a drill size guide (2) if available. If one is not available, drill the hole slightly smaller than the diameter of the extractor. (When drilling larger screws it may be necessary to drill a small pilot hole first, then a larger hole).

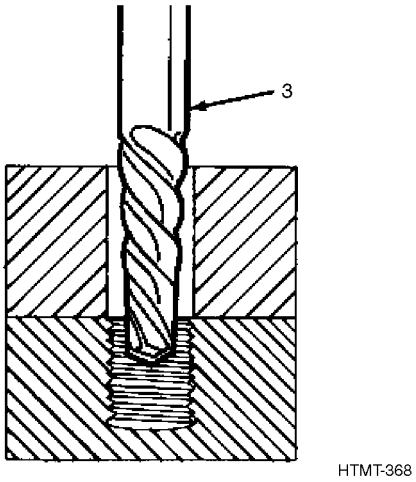

2. Insert extractor (3) in the drilled hole.

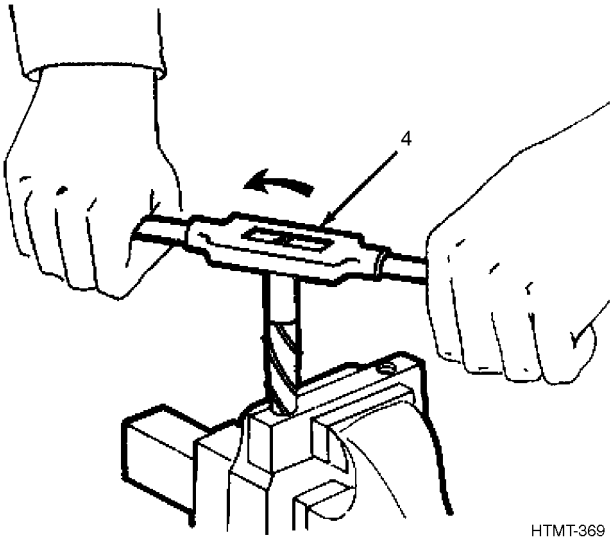

3. Remove the broken screw by turning the extractor counterclockwise. The extractor may be turned using a tap wrench or open end wrench (4).

24.4 CARE OF EXTRACTORS.

1. Keep extractors clean and lightly oiled.

2. Store in case provided or wrap individually to protect the extracting edges.

CHAPTER 25
WRENCHES

25.1 HOW TO CHOOSE AND USE THEM.

Types and Uses, Paragraph 25.2, provides you with a list of some of the types of wrenches. These pages should help you select the right wrench to do the job. Using, Paragraph 25.4, tells you how to use the wrench to perform the desired function. Care, Paragraph 25.11, tells you how to care for the items.

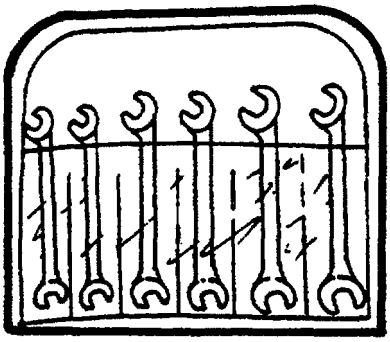

HTMT-370

25.2 TYPES AND USES.

A wrench is a tool specially designed to tighten or loosen nuts, bolts, studs, and pipes. Wrenches are forged from steel alloy to prevent breakage. There are many different types of wrenches. Each type has its own use. By using the proper wrench for the task to be done, you will not break the wrench, damage the equipment, or cause personal injury. The following section is intended to give you information on the different wrench types.

25.2.1 Open-End Wrenches.

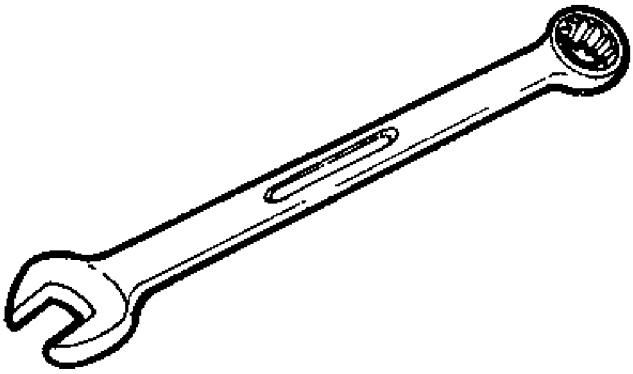

HTMT-371

All open-end wrenches have open jaws on one or both ends of the wrench. Most jaw openings are offset from the shank portion of the wrench by 15 degrees. The wrench length is determined by the size of the jaw opening. Some of the more common types of open-end wrenches and their uses are listed below.

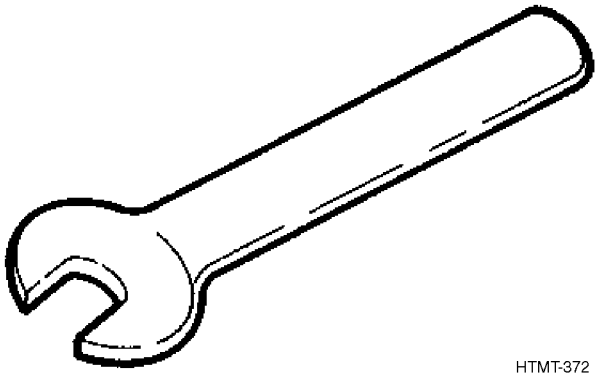

HTMT-372

The engineers single open-end wrench has a long smooth shank providing the user with a better gripping surface. It is used to reach behind or below blind surfaces.

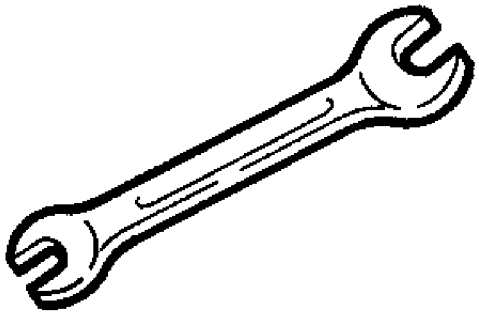

HTMT-373

The engineer's double open-end wrench has different size openings on each end. This type of an arrangement permits a smaller number of wrenches to complete a set. The engineer's double open-end wrench is also used to reach behind or below blind surfaces.

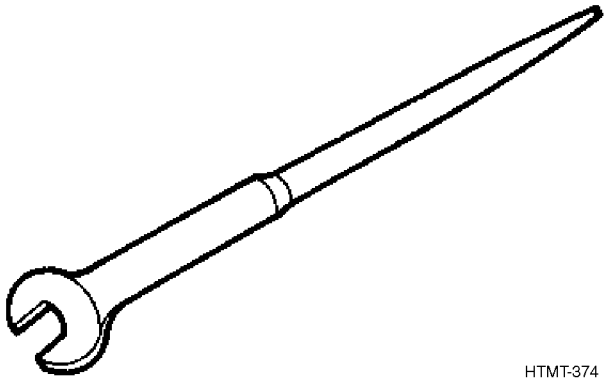

HTMT-374

The construction wrench combines the open-end jaw with along tapered shank providing a wrench/alignment punch combination. The construction wrench is used in the building trades and on heavy objects which require alignment before fastening.

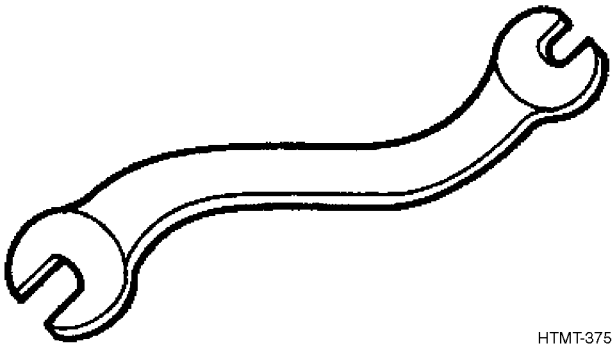

HTMT-375

The S-Shape wrench has a 22-1/2 degree offset. It is used to reach around obstructing objects.

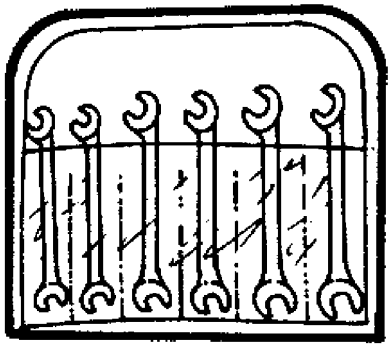

HTMT-376

Ignition wrenches have the same size jaw opening on both ends. However, one end of this wrench is offset 15 degrees and the other end is offset 60 degrees. Ignition wrenches are smaller in size, as they are used to remove components of automotive ignition systems.

25.2.2 Box Wrenches.

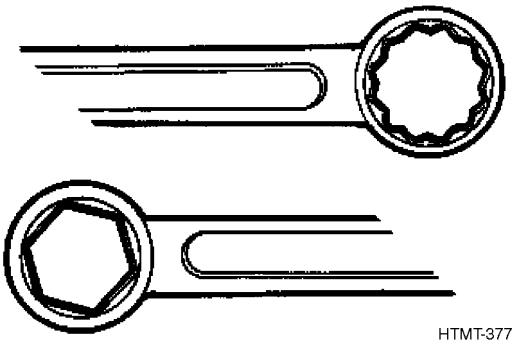

HTMT-377

A box wrench surrounds the nut, bolt head, or stud on all sides. It is available with both 6-point and 12-point openings. The 12-point opening is more common, as it may be used on both square and hexagonal bolt heads. Box wrench openings are offset from the shank by 15 degrees. A box wrench should be used whenever possible, as it provides the best protection to both the user and the equipment. The major disadvantage of the box wrench is that there must be enough clearance above and around the bolt head to place the wrench over the bolt head.

The length of the box wrench depends upon the size of the opening. Some of the more common types of box wrenches and their uses are shown below and on page 25-4.

HTMT-378

The most common box wrench is the double offset box wrench. It comes with a different size opening at each end. The double offset wrench is used to remove normal nuts and bolts.

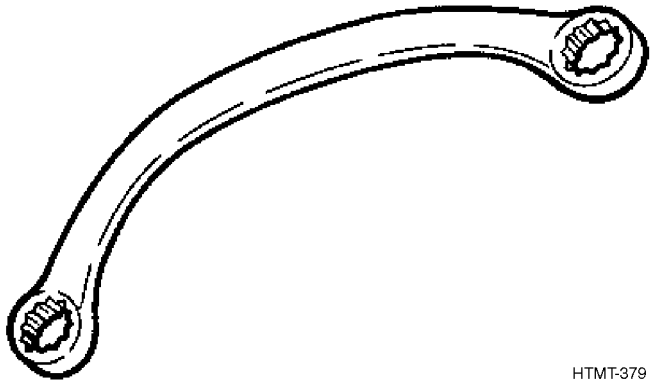

HTMT-379

The half-moon wrench has different size openings at each end and has a curved shank. The half-moon wrench is used when it is necessary to reach around objects in tight spaces.

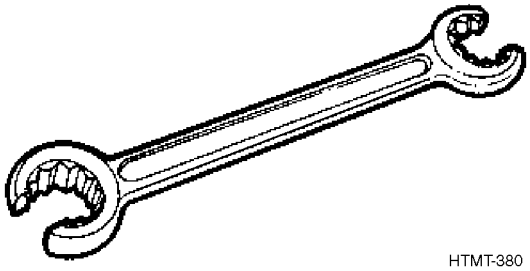

HTMT-380

The split-box wrench is a 12-point wrench with 2 points cut away. The split-box wrench is used on pipe unions or couplings where you want the protection of a box wrench, but need to slide the wrench around a pipe.

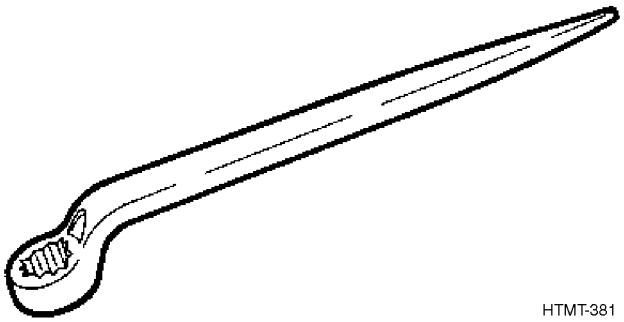

HTMT-381

The structural-tapered handle wrench combines a box wrench opening with a tapered shank to produce a box wrench/alignment pin combination. It is usually used on heavy structural construction (bridge girders, building beams, etc.).

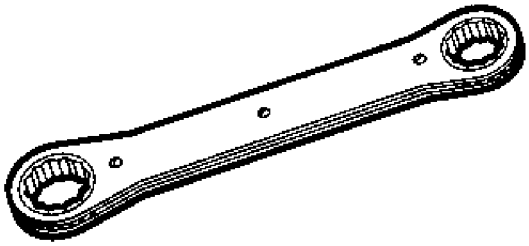

HTMT-382

Ratchet-box wrenches are either reversible or nonreversible. The ratchet-box wrench does not have to be lifted up and repositioned each time the shank has reached its maximum travel between two obstructions. The ratchet-box wrench provides an easy means of removing and/or installing nuts or bolts which are not under strain. These wrenches should not be used to torque down or to free nuts or bolts.

25.2.3 Combination Wrenches.

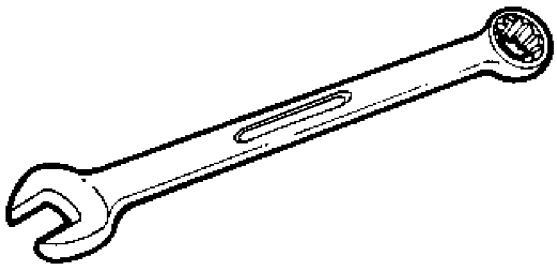

HTMT-383

The combination wrench combines the best features of the open-end and box wrench into a single wrench. The size opening on the wrench is the same on both ends, but one end has a box head and the other end has an open-end head. The length of the wrench varies with the size of the head. The most common opening is offset from the shank by 15 degrees. They are used to remove common-size nuts and bolts.

25.2.4 Socket Wrenches.

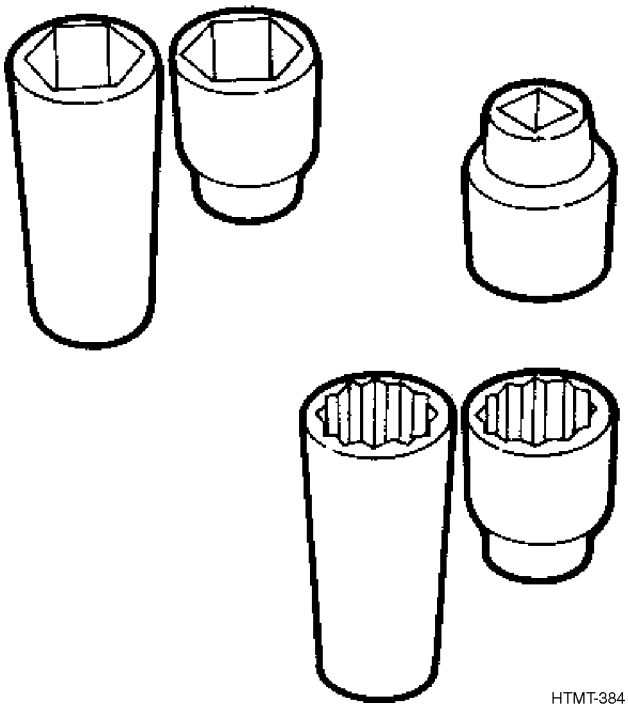

HTMT-384

The socket wrench consists of a round metal sleeve with a square opening in one end for insertion of a handle, and a 6-point or 12-point wrench opening in the other. They are available in both common (short) and deep (long) lengths. The length of the socket does not determine its size. Socket wrenches usually come in sets. The square or drive end may vary in size from 1/4 to 1 inch. In socket sets, the drive end determines the size; for example, a 1/4-inch drive set may contain nine sockets ranging in size from 3/16 inch through 1/2 inch. In 3/8-inch drive, the smallest socket would be 3/8 inch. This overlap in size allows better control by the user and prevents breakage of either the socket or the equipment from using the wrong size handle.

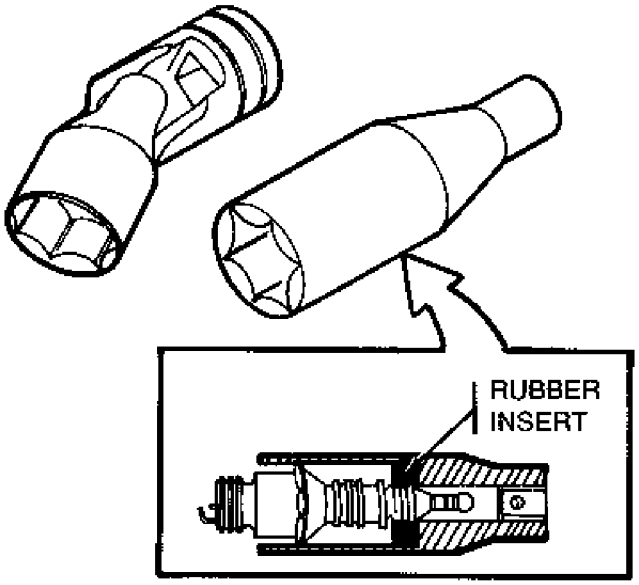

HTMT-385

A universal joint socket and spark plug socket are examples of specially designed sockets. The universal joint socket is used When it is necessary to reach around an object. The spark plug socket has a rubber insert. This insert protects the ceramic insulator when removing and/or installing the spark plug.

All sockets must be used with some type of handle. Sockets are used to remove and/or install common-size nuts or bolts.

25.2.5 Socket Wrench Handles, Extensions and Adapters.

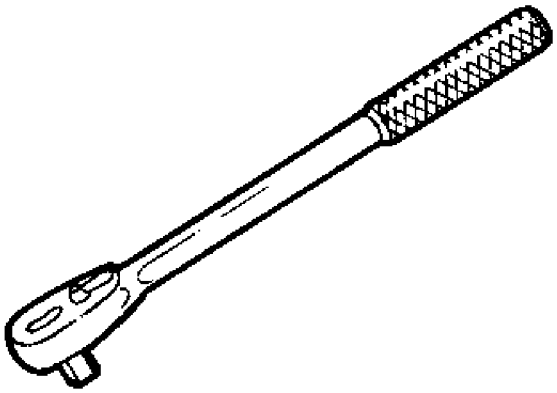

HTMT-386

Ratchet handles may have either a straight-head or a flex-head. Both types have a selection lever on the top of the head to determine the direction of drive. The flex-head is used to go around objects. Both types are used with socket wrenches for rapid removal of nuts or bolts.

HTMT-387

The sliding T-Bar handle has a single head which may be adjusted along a bar handle. It has two spring-loaded balls, one for keeping the bar in the head and the other for keeping the socket on the head. The sliding T-Bar is used for increased leverage or for working around other objects.

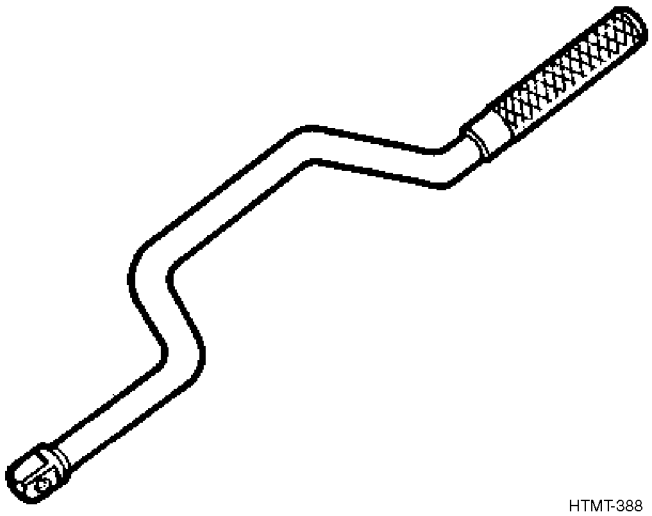

HTMT-388

The speed handle has a brace-type shaft with a revolving grip on the top. It is used for rapid removal and/or installation of nuts or bolts, which are out in the open and have little or no torque.

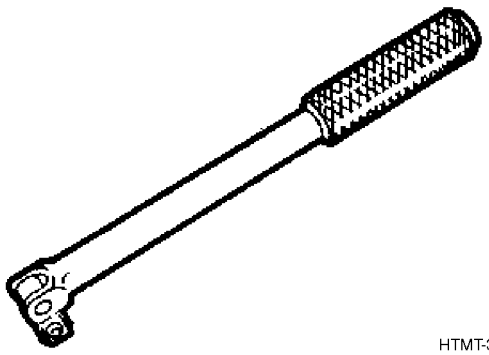

HTMT-389

A hinged handle has a hinged adapter on one end which may be rotated in 90 degree steps. The hinged handle is used when additional leverage or torque is needed to loosen nuts or bolts.

HTMT-390

The spin-type screwdriver grip handle has a plastic or wood handle. It is used to remove and/or install small nuts and bolts.

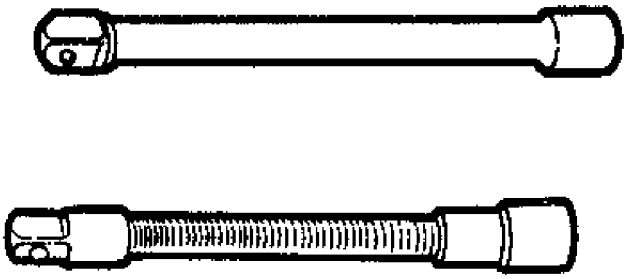

HTMT-391

Extensions are either rigid or flexible. They range from 2 to 17 inches in length. Extensions may be used with any socket handle combination to gain clearance above nut or bolt.

HTMT-392

The ratcheting adapter converts a non-ratcheting handle into a ratchet drive. It is used for quick removal of nuts or bolts.

HTMT-

The socket wrench adapter is used to change the drive size between the socket and the handle. It usually increases or decreases the fractional size by one (1/4 inch to 3/8 inch). The socket wrench adapter is used to increase or decrease the drive end of a particular handle allowing it to be used with two different socket sets.

25.2.6 Special Purpose Socket Wrenches.

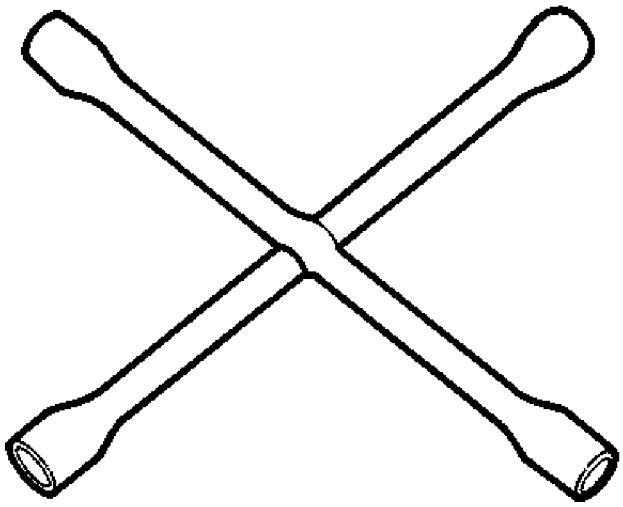

HTMT-394

The four-way socket wrench has four nonremovable sockets attached to four arms. Each of the sockets is a different size. The four-way socket wrench is usually used to remove or install the wheel stud nuts of a vehicle. The handle construction provides extra leverage when loosening and tightening the stud nuts.

HTMT-395

The 90-degree offset handle socket wrench has a fixed socket at the end of a bent handle. It is used for removing and/or installing a nut or bolt which may not be reached with a box or combination wrench.

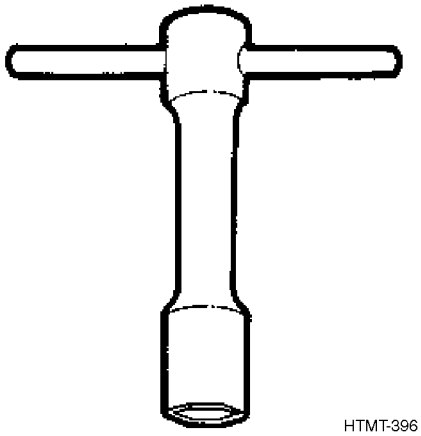

HTMT-396

The T-handle socket wrench has a fixed T-handle above a fixed socket wrench. The T-handle socket wrench has many uses. One of the more common uses is for shutting off or turning on water or gas lines. The T-handle permits the operator to apply the turning force required to operate the valve.

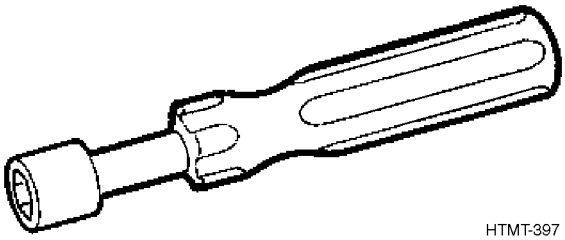

HTMT-397

The screwdriver-type socket wrench has a socket fixed on the bottom of a screwdriver handle. They are used to remove and/or install small nuts and bolts.

Stud removers may be either the cam-operated type or the wedge type. They are used to remove studs from their seats for replacement. A single stud remover can be adjusted to remove different size studs.

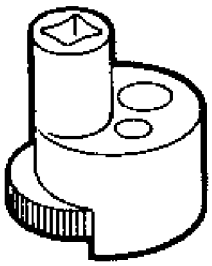

HTMT-398

The cam-operated type uses a concentric cam to get a grip on the stud. The cam is tightened on the stud through mechanical linkage between the drive shank and the cam.

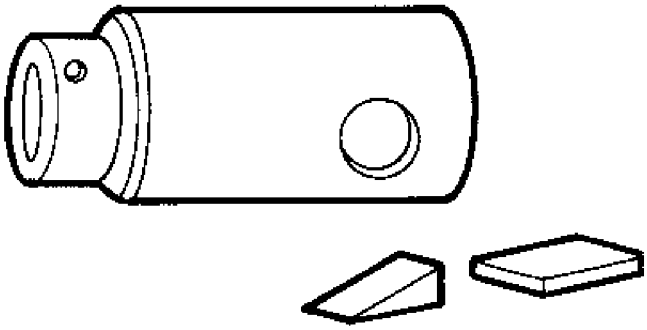

HTMT-399

Wedge-type stud removers are made of a socket housing and two metal wedges. The socket is placed over the stud to be removed and the wedges are driven into the socket to hold the

stud. The socket housing is now turned with a handle to remove the stud.

25.2.7 Crowfoot Wrench.

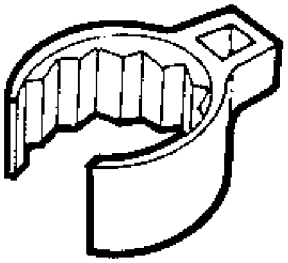

HTMT-400

The crowfoot wrench is an open-end wrench head which is turned with a socket handle. It is used to remove and/or install nuts or bolts. It is also used where an obstruction would prevent the use of a regular socket.

25.2.8 Hex Key Wrench (Shorter Section).

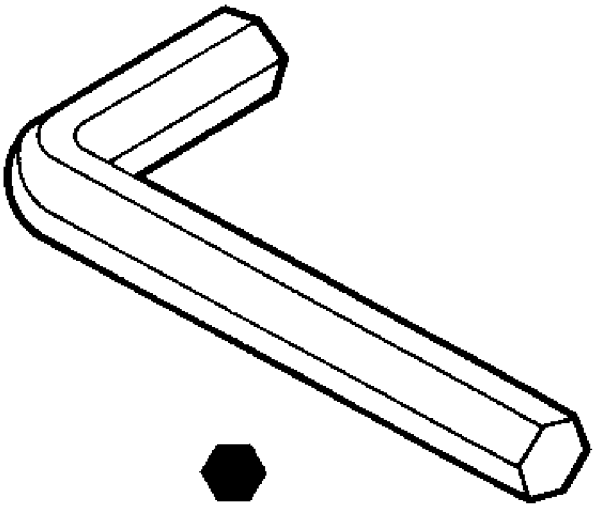

HTMT-401

The hex key wrench is an L-shaped, six-sided wrench. Both ends of the "L" are the same size so you can turn the wrench either to gain access to the screw head or to obtain a leverage advantage. The hex key wrench is used to remove and/or install hex head screws.

25.2.9 Plug Wrenches. There are three basic types of plug wrenches, the bar-type, the multiple plug wrench, and the socket-type. Plug wrenches are used to remove and/or install drain plugs.

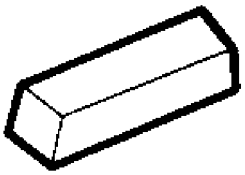

HTMT-402

Bar-type plug wrenches may be either square or hexagonal and are about two inches long. A combination wrench or socket must be used to turn the plug.

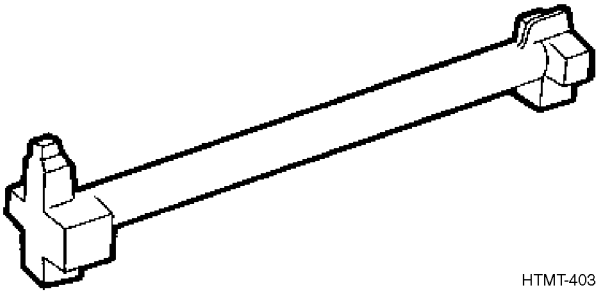

HTMT-403

The multiple plug wrench combines several plug ends on a common handle.

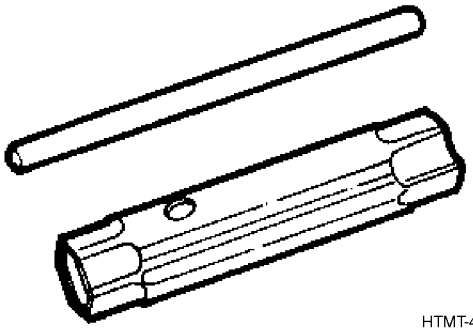

HTMT-404

Socket-type plug wrenches are usually combined in sets with an assortment of handles. The set will contain several sizes.

25.2.10 Adjustable Open-End Wrench.

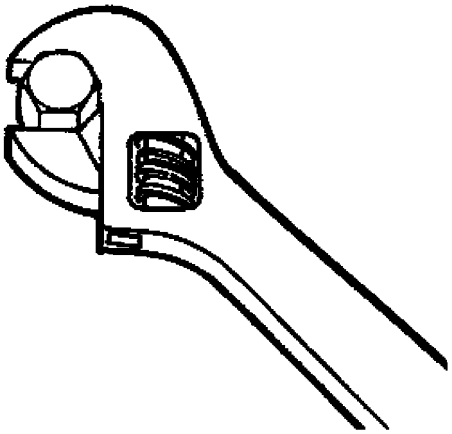

HTMT-405

The adjustable open-end wrench has one fixed jaw and a movable or adjustable jaw. The adjustable jaw is set against the face of the nut by turning a knurled worm gear. Care must be exercised when using an adjustable wrench. Always use the fixed jaw for applying pressure to tighten or loosen nuts or bolts. Adjustable wrenches are used to remove and/or install nuts, bolts, and studs when the correct size wrench or socket is not available.

25.2.11 Clamp Pliers.

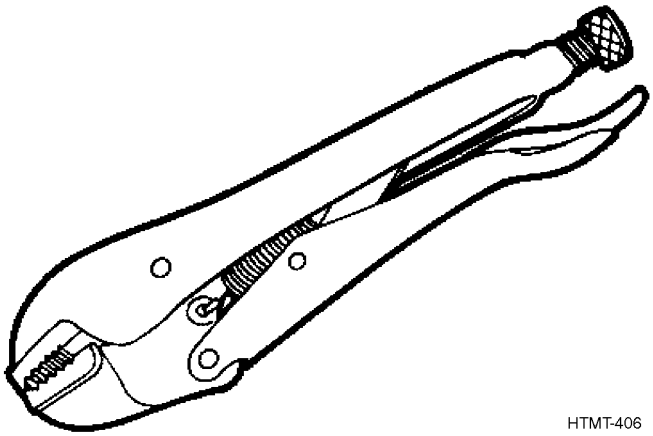

The clamp pliers are generally used more as a wrench than as a pair of pliers. It has a fixed jaw and handle which contains an adjustment screw for the movable jaw. The other handle is in two sections, one section to apply pressure and to look the pliers, and the other section, when pulled, to release the grip. Clamp pliers are used to hold or clamp nuts and bolts which have been rounded off by using the wrong size wrench.

25.2.12 Monkey and Auto Wrenches.

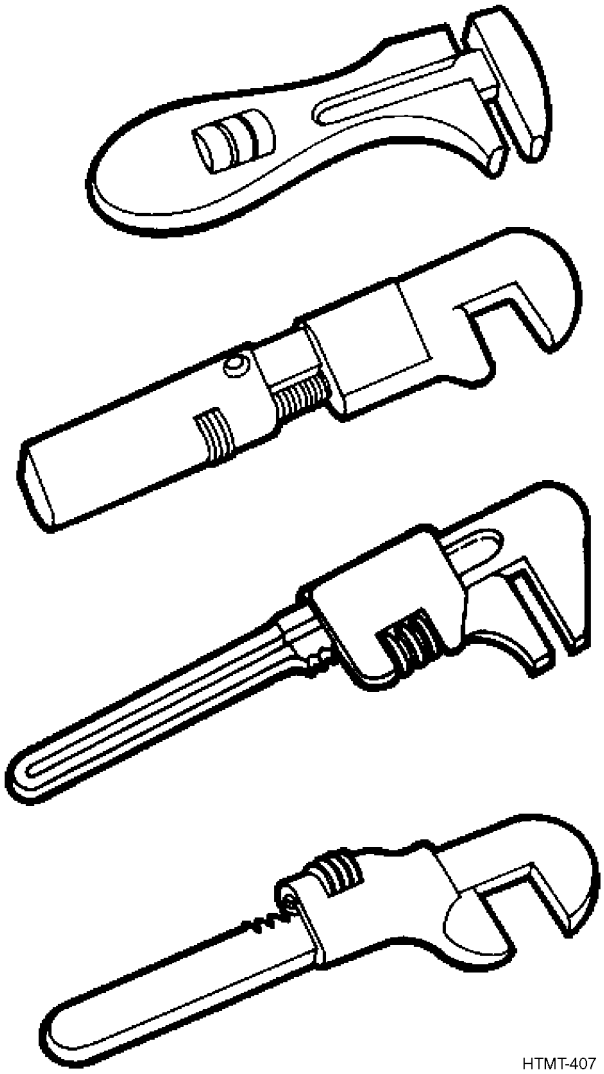

The monkey and auto wrenches are similar and have one fixed jaw and an adjustable jaw which moves along the handle by turning a knurled worm gear. Monkey and auto wrenches are used to install or remove odd size nuts and bolts. An adjustable wrench must be used with care. Always apply pressure against the fixed jaw.

25.2.13 Pipe Wrenches. There are three basic types of pipe wrenches, the stillson wrench, the strap wrench, and the chain wrench. They are all used to connect or break pipe joints or to turn cylindrical parts.

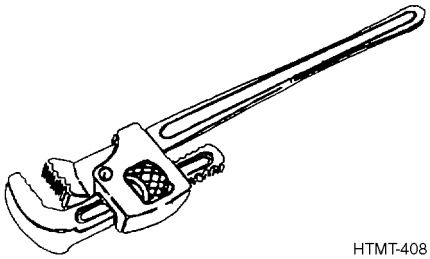

HTMT-408

The stillson pipe wrench has a fixed jaw which is on the end of the handle and an adjustable jaw at the top of the wrench. Adjustment is made by turning a knurled adjusting screw which moves the jaw. Always pull the pipe fitting towards the fixed jaw. The serrated (grooved) jaws of the stillson wrench will mar soft pipe.

HTMT-409

Strap pipe wrenches have a leather or canvas strap which is attached to the handle. The strap is looped around the pipe and back through the handle to grip the pipe. The strap pipe wrench will not scratch the surface of the pipe.

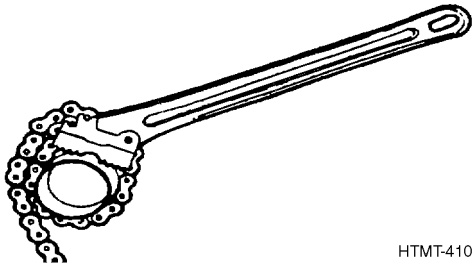

HTMT-410

Chain pipe wrenches have a section of bicycle-type chain permanently attached to the handle. The upper section of the head has teeth which mate with the links of the chain. The chain is wrapped around the pipe and pulled over the head section of the wrench to grip the pipe. Chain pipe wrenches will scratch the surface of the pipe.

25.2.14 Torque Wrenches. Torque wrenches are designed to measure the specific degree of tightness of nuts or bolts. Torque wrenches are considered precision instruments and therefore must be calibrated at regular intervals. Torque wrenches are used for final tightening of nuts and bolts. After use of the click type torque wrench, the user will reset torque wrench to lowest setting.

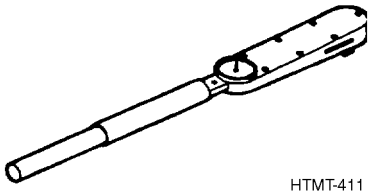

HTMT-411

A dial torque wrench has a head which contains the drive element and a dial for reading the exact amount of torque.

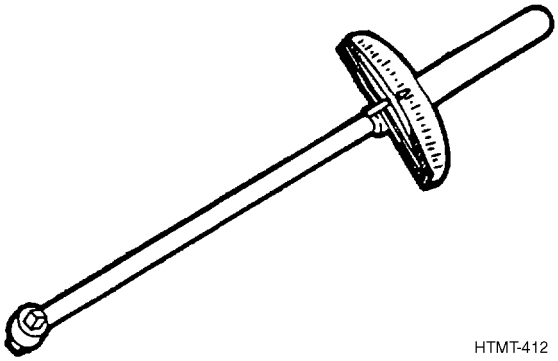

HTMT-412

A scale torque wrench has a rod which runs parallel to the handle and the drive element. This rod moves across the scale to the right or left as torque is applied.

25.2.15 Power Torque Wrench.

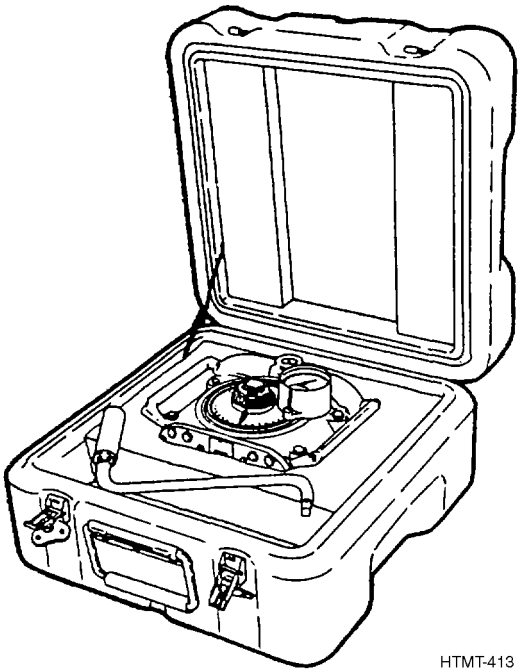

HTMT-413

Using a powerful gear train, the power torque wrench is completely mechanical in operation. The power torque wrench is operated by a hand crank, but power tools such as the electric drill can be used to speed operations. The torque is calibrated

in foot pounds, which is shown by a dial indicator on the top face of the power torque wrench. This type of torque wrench is used for tightening nuts and bolts requiring 200 or more foot pounds of torque.

NOTE

A special feature of this type of torque wrench is that it is possible to loosen as well as tighten nuts and bolts.

25.2.16 Spanner Wrenches. Two basic types of spanner wrenches are the hook-type and the pin-type. Hook-type spanner wrenches are either fixed or adjustable and are normally used to tighten fire hoses or similar couplings which have a protruding lip. Pin-type spanner wrenches have pins protruding from the handle which fit into holes in the coupling or plate to be tightened or loosened. Spanner wrenches are special purpose wrenches and are to be used only for their intended purpose.

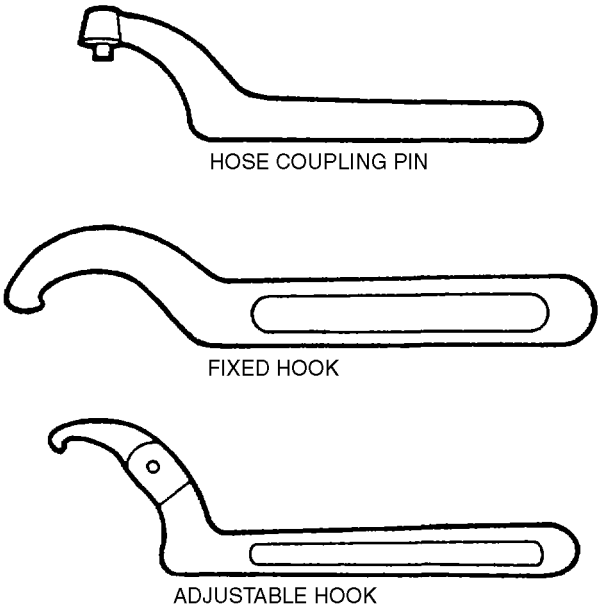

HTMT-414

Three kinds of hook-type wrenches include the hose coupling pin, for tightening and loosening hose couplings, the fixed hook, for tightening or loosening couplings with protruding rims or edges, and the adjustable hook-type.

The adjustable hook-type is similar to the fixed hook-type. However, it may be adjusted around objects and fastened before use.

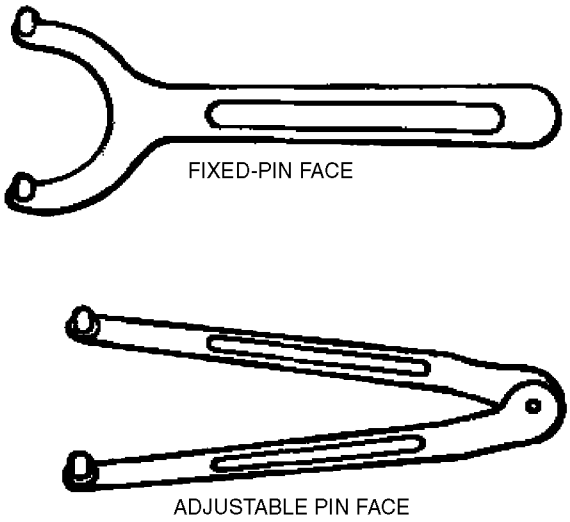

HTMT-415

There are two basic pin-type wrenches. The fixed-pin face has been designed to fit a particular pattern and is nonadjustable. The fixed-pin face is used to remove protective cover plates. The adjustable pin face has two arms joined at a common point. The other end of the arms contain pins which may be engaged in the holes of a cover plate for removal.

25.3 SAFETY.

1. Wrenches should fit the nuts or bolts they are to loosen or tighten.

2. Never turn adjustable wrenches so that the pulling force is applied to the adjustable jaw.

3. Do not attempt to extend the handle in any way to increase the leverage on a wrench. Increased leverage may damage the wrench or the work.

4. Apply penetrating oil to rusted nuts and/or bolts that resist turning. Allow time for oil to penetrate before attempting to turn.

5. Do not strike wrenches with hammers to tighten or loosen nuts or bolts.

6. Do not exert a hard pull on a pipe wrench until it has gripped the work firmly.

7. Remember to pull on the wrench, when possible, in order to protect your knuckles in case the wrench slips.

8. Return all wrenches to their proper places upon completion of each job. This eliminates the possibility of leaving them where they can injure someone.

9. Always keep the wrench in good condition, clean and free from oil or grease. Otherwise it may slip, resulting in possible serious injury to you or damage to the work.

25.4 HOW TO USE A BOX WRENCH.

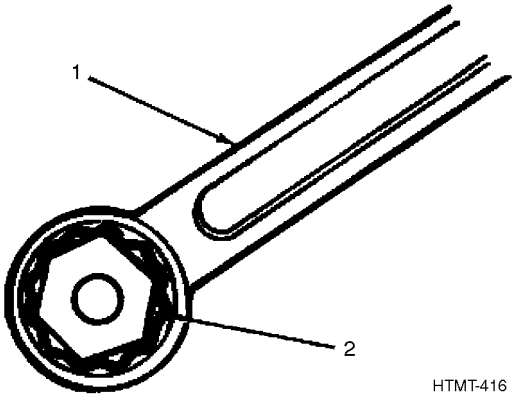

1. Select the size of wrench that fits the nut or bolt.

2. Place the wrench (1) on the nut or bolt (2). Swing the wrench clockwise to tighten and counterclockwise to loosen for a right hand threaded nut or bolt. Reverse the above for a left hand threaded nut or bolt.

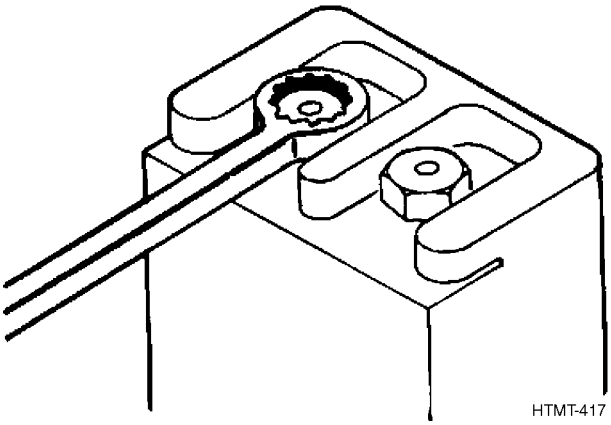

3. If there is insufficient room to swing the wrench in a full circle, lift it completely off the nut when it comes to the limit of the swing, and place it in a new position, permitting another swing. A swing through of a 15 degree arc is usually sufficient to continuously loosen or tighten a nut or bolt.

4. After the nut is tight, give it a final tightening.

25.5 USING A SOCKET WRENCH.

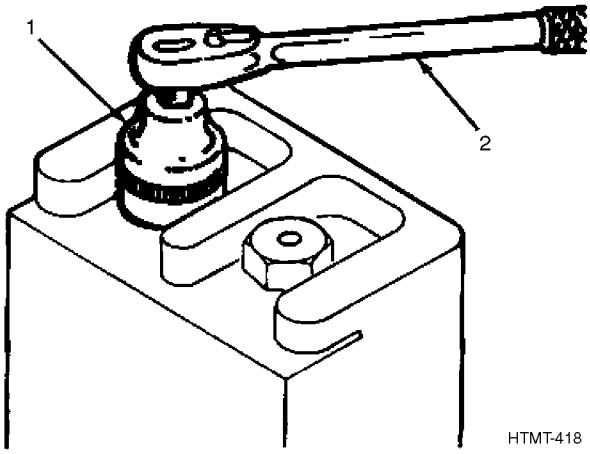

1. Select the size of socket (1) that fits the nut or bolt to be turned and push it onto the handle (2) which is best suited to the job.

2. If there is room to swing, use the ratchet handle. (The handle may be made to ratchet in one direction for tightening work and in the other direction for loosening work.)

3. Swing the handle back and forth to turn the nut in the desired direction. (The socket need not be raised from the nut at the end of each swing.)

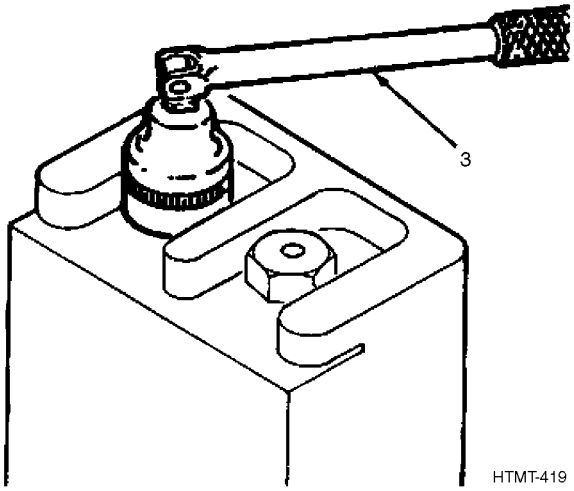

4. When a tight nut is to be loosened or a nut is to be set up, the nut hinged handle (3) can be swung at right angles to the socket to provide the most leverage. At the point where the nut turns easily, the handle can be swung to a vertical position and twisted rapidly between the fingers in the same manner as a screwdriver.

25.6 USING AN ADJUSTABLE OPEN-END WRENCH.

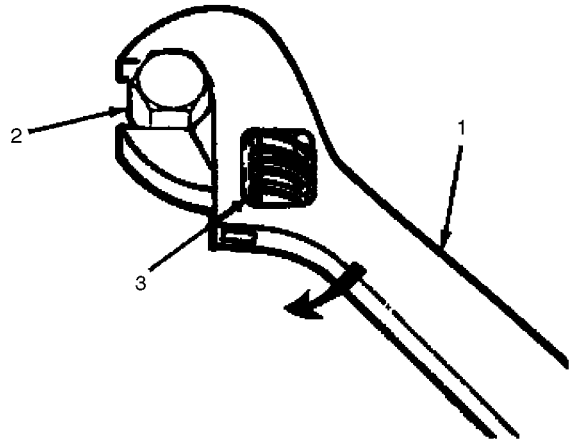

HTMT-420

1. Place the wrench (1) on the nut (2) so that the force used to turn it is applied to the stationary jaw side of the wrench.

2. Tighten the knurled adjusting nut (3) until the wrench fits the nut as tightly as possible.

CAUTION

If the wrench does not fit tightly, it will slip and round the corner of the nut.

3. Swing the wrench clockwise to tighten the nut.

4. After the nut is tight, set it up (final tightening).

25.7 USING AN ADJUSTABLE STRAP PIPE WRENCH.

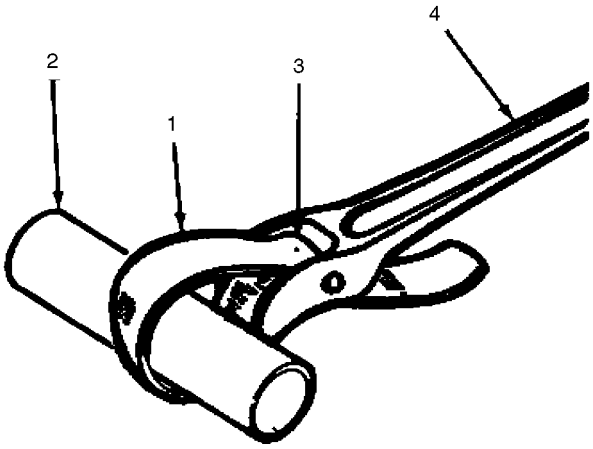

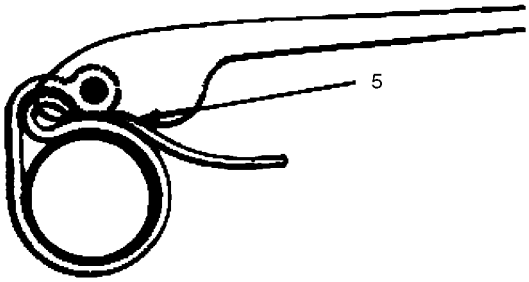

HTMT421

1. Loop the strap (1) around the pipe (2) in the opposite direction to that in which the pipe is to be rotated.

2. Slip the end of the strap through the shackle (3) and draw it up tightly.

3. Pull the handle (4) to turn the pipe in the desired direction until the desired tightness is obtained.

NOTE

The jaw (5) at the end of the shackle will seat against the strap and, as the handle is pulled, the strap will tighten and turn the pipe.

25.8 USING THE TORQUE WRENCH.

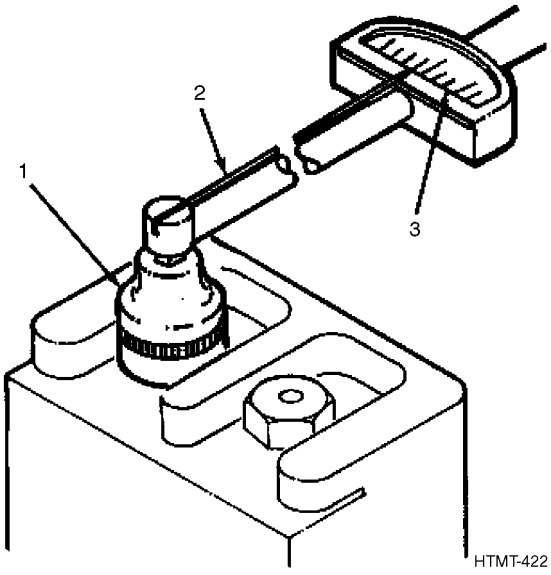

1. Select proper size socket wrench (1) and attach to torque wrench square drive (2).

2. Place socket wrench on work and pull the torque wrench handle in the desired direction to tighten the work.

3. Do not use torque instrument to break fasteners loose.

4. Do not exceed rated torque as over torqueing can cause wrench or part failure.

NOTE

The tightening torque will be indicated on the dial or scale (3), depending on the type of the torque wrench used.

5. Remove the wrench when the torque on the dial or scale is reached.

25.9 USING THE POWER TORQUE WRENCH.

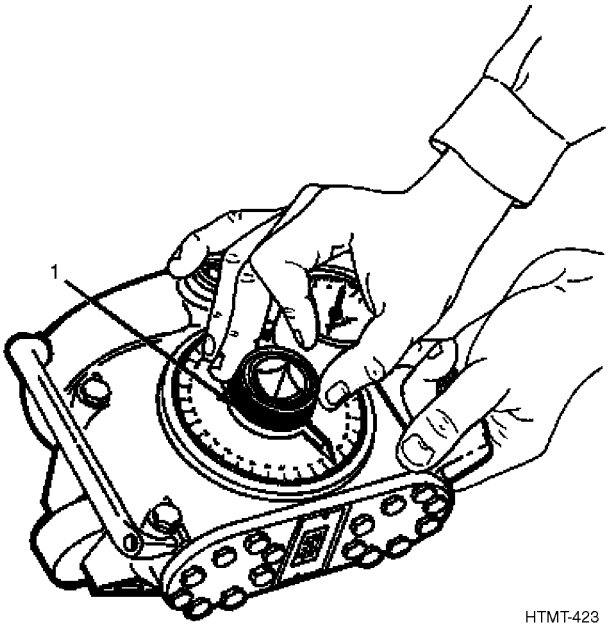

NOTE

The following procedure is not the only application for the power torque wrench. However, use of this tool is basically the same regardless of model or application.

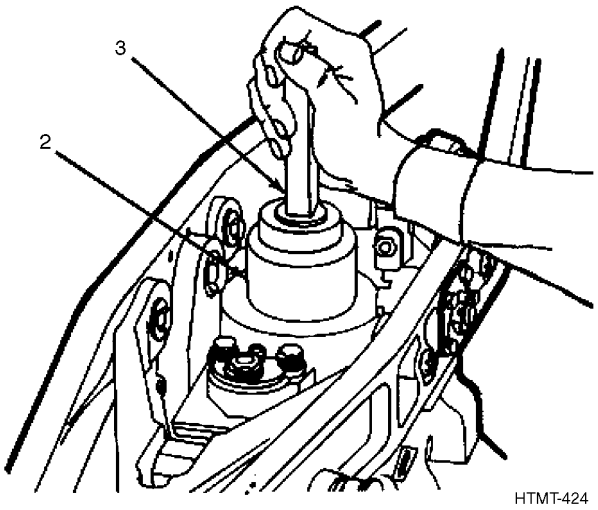

1. To tighten a nut, set the knurled ratchet indexer (1) (located on the front of the wrench) in the same direction the handle will be turned.

2. Install applicable socket (2) onto the nut to be tightened.

3. Install square drive bar (3) into the socket.

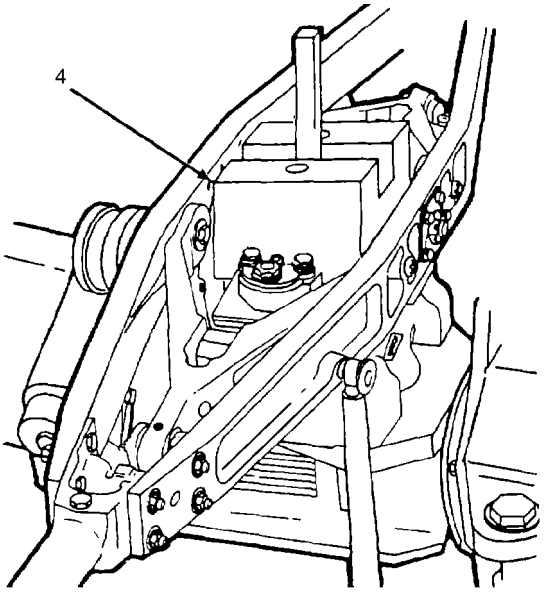

HTMT-425

CAUTION

Different reaction adapters are required for various operations. Be careful to use the correct reaction torque adapter. Failure to do so will render torque wrench useless and can damage the equipment.

4. Install reaction torque adapter (4) over drive bar and socket as shown.

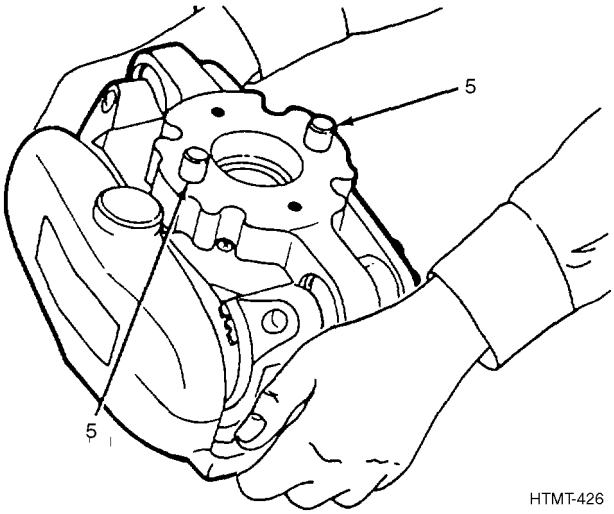

HTMT-426

NOTE

When installing power torque wrench, make sure the two locking pins (5) underneath the wrench are firmly engaged to the reaction torque adapter.

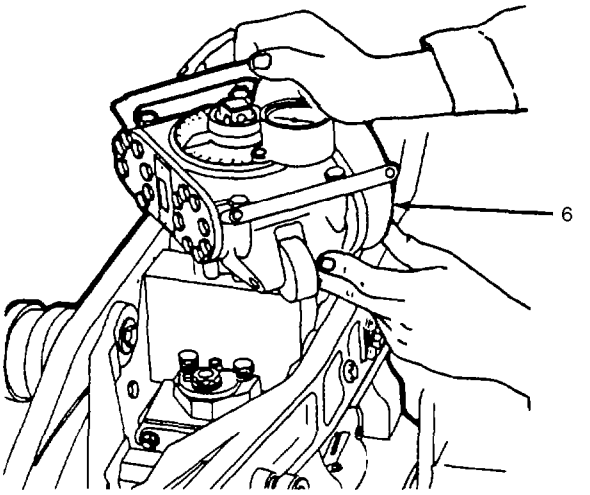

HTMT-427

5. Install power wrench (6) onto square drive bar and reaction torque adapter. Rotate power wrench until the reaction torque adapter engages a fixed point.

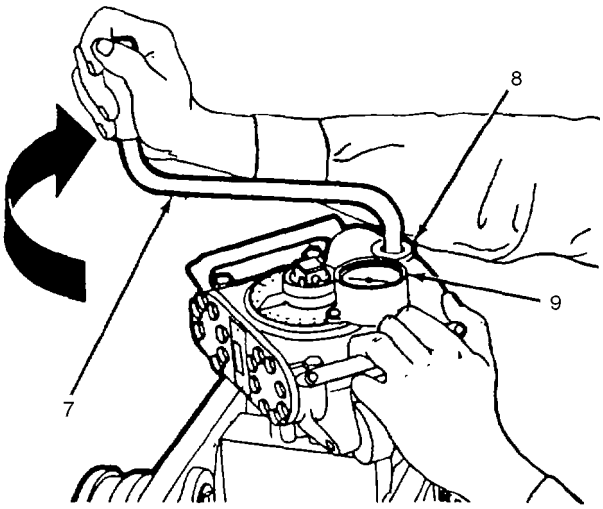

HTMT-428

CAUTION

Do not use impact wrench of any kind to operate this wrench.

6. Install the crank handle (7) into the square input (8) and turn in the same direction as the output must turn.

7. Continue to turn crank until torque indicator (9) shows the desired torque reading.

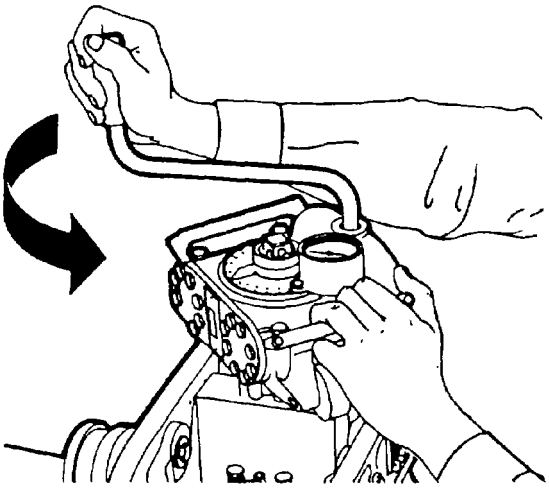

8. After obtaining the desired torque, turn the crank in the opposite direction until the torque indicator returns to zero (green band). This will remove the holding pressure on the wrench.

9. Remove the wrench, adapter, and socket.

10. To loosen a nut, repeat steps 1 through 6.

NOTE

Normally, torque will build up in the wrench until break-away torque is reached. As the torque load is released, the indicator will reverse direction.

11. Continue to turn crank until indicator returns to "O."

12. Remove the wrench, adapter, drive bar and socket.

25.10 USING A SPANNER WRENCH.

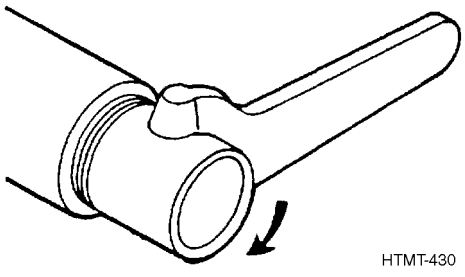

1. Insert the pins or lugs into the pin holes of the part.

2. Keep the pin face of the wrench flush against the surface and turn the wrench.

3. Exert enough force against the wrench so that the pins do not pop out of the holes.

4. Make certain that the pins fit the holes and the force is applied with the handle perpendicular to the work.

5. Remove the wrench when desired tightness is obtained.

25.11 CARE.

1. Clean all wrenches after each use.

2. Wrenches that come in sets should be returned to their cases after use.

3. Apply a thin film of oil to the metal parts of all wrenches before storing them.

4. For long-term storage, the wrenches should be covered with a rust-preventive compound and carefully stored in a dry place.

CHAPTER 26
CHISELS

26.1 HOW TO CHOOSE AND USE THEM.

Types and Uses, Paragraph 26.2, provides you with a list of some of the types of chisels. These pages should help you select the right chisel to do the job. Using, Paragraph 26.3, tells you how to use the chisel to perform the desired function. Care of Chisels, Paragraph 26.6, tells you how to care for the items.

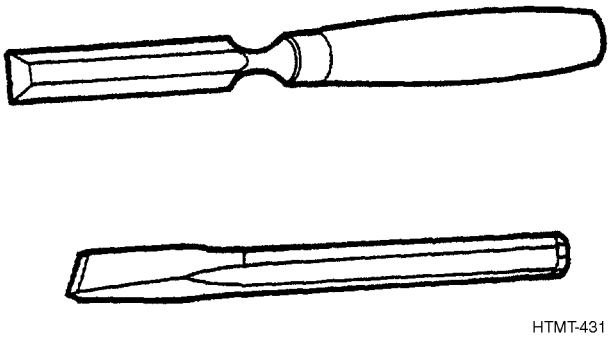

HTMT-431

26.2 TYPES AND USES.

26.2.1 Woodworker's Chisels.

HTMT-432

There are two types of woodworker's chisels. The socket type has a blade and socket handle forged of high carbon steel in a single casting. The wooden handle is inserted into the socket. This type of chisel is used to cut and pare off wood. Generally socket-type chisels are used for heavier cutting when a hammer or mallet may be required for additional driving force.

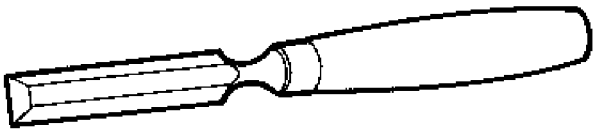

HTMT-433

The tang-type chisel is forged in a single casting. The handle is drilled and inserted over the tang and reinforced with a metal band. The tang-type chisels are also used to cut and pare wood. However, the driving force required is hand pressure only.

26.2.2 Machinist's Chisels.

HTMT-434

Machinist's chisels are designed to cut and shape cold metal and are usually struck with a hammer. The flat or cold chisel is composed of hardened steel and has a tapered cutting edge on one end and a flat base on the other end.

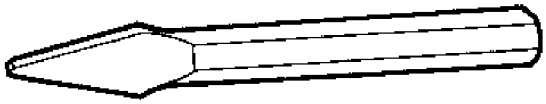

HTMT-436

The diamond point chisel has a solid point on one end and a flat base on the other end. It is used for drawing and cutting holes in flat stocks and to cut V-grooves.

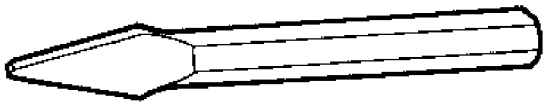

HTMT-436

The cape chisel has a small solid point on one end and a flat base on the other end. It is used for cutting keyways or slots in metal, and square corners.

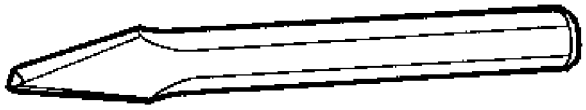

HTMT-437

The roundnose chisel has a ground edge on one end and a flat base on the other end and an octagon-shaped stock. It is used to align drilled holes, cut channels, cut oil grooves and similar work.

26.2.3 Track Chisel.

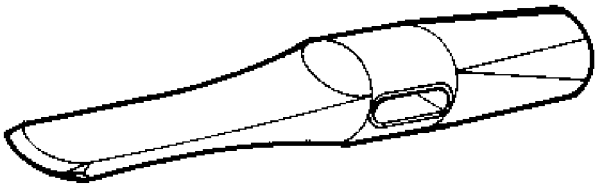

HTMT-438

The track chisel has a beveled point on one edge and a flat face on the other end. The cutting edge is 1-3/8 inches wide; the overall length is 10-1/2 inches and it weighs 5-1/2 pounds. The track chisel is used with a 22-inch sledge hammer to remove track bolts, boiler rivet heads and cut rail when a saw or cutting torch is not available.

26.2.4 Rivet Buster Chisel.

HTMT-439

The rivet buster chisel has a single ground flat cutting edge on one end and a flat face on the other end. The cutting edge is about 3/4 inch wide and the overall length is about 9 inches. It is used for cutting off chassis rivets and in other difficult places which cannot be reached by other chisels.

26.3 USING A WOODWORKER'S CHISEL.

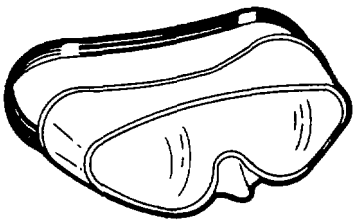

WARNING

Wear eye protection. Keep both hands back of the cutting edge at all times.

NOTE

The following procedure is designed for using a woodworker's chisel.

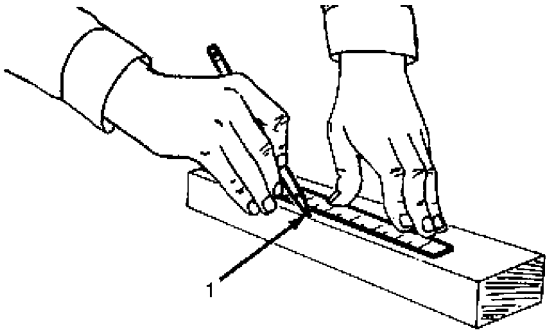

HTMT-441

1. With rule and pencil, mark area (1) to be cut with the chisel.

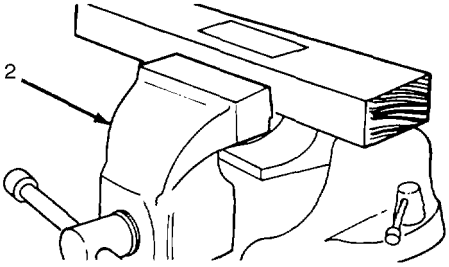

HTMT-442

2. Examine the grain of the wood, and place securely in a vise (2) so you are cutting with the grain. The wood should not be able to move in any direction.

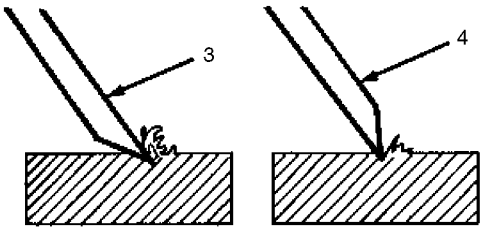

HTMT-443

3. Rough cuts are made with bevel side down (3), while smooth finishing cuts (4) are made with bevel side up.

WARNING

Never cut toward yourself with a chisel.

CAUTION

Use short, rapid mallet blows to control depth and length of cut.

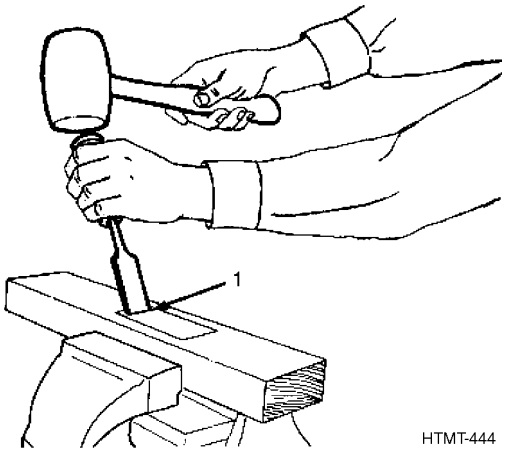

4. Start your cut about 1/8 inch from the guide line (1). Using a chisel and mallet, make your cut toward the center (the waste area) to protect the edge.

5. Make small thin cuts. This prevents breaking or splitting of the work. Check your guide marks often to prevent overcutting.

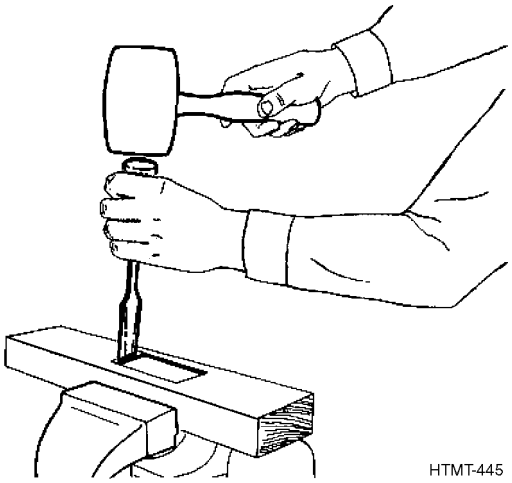

6. Remove the last 1/8 inch using chisel and mallet to complete the job.

26.4 USING A MACHINIST'S COLD CHISEL.

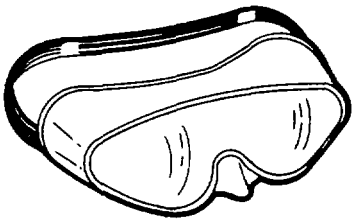

WARNING

Wear eye protection.

NOTE

The following procedure is designed for using a machinist's cold chisel. However, cutting round stock is not the only use for this type of chisel.

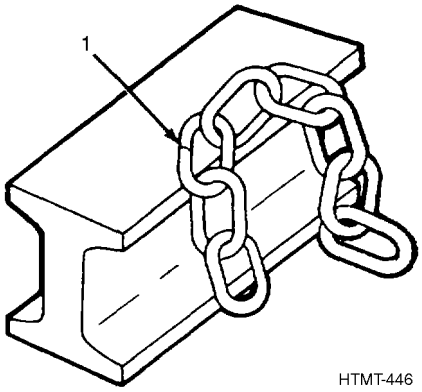

1. With a rule and marking pencil measure desired length and mark.

2. Place mark on a hard steel surface (1) (anvil, closed vise jaws, etc.).

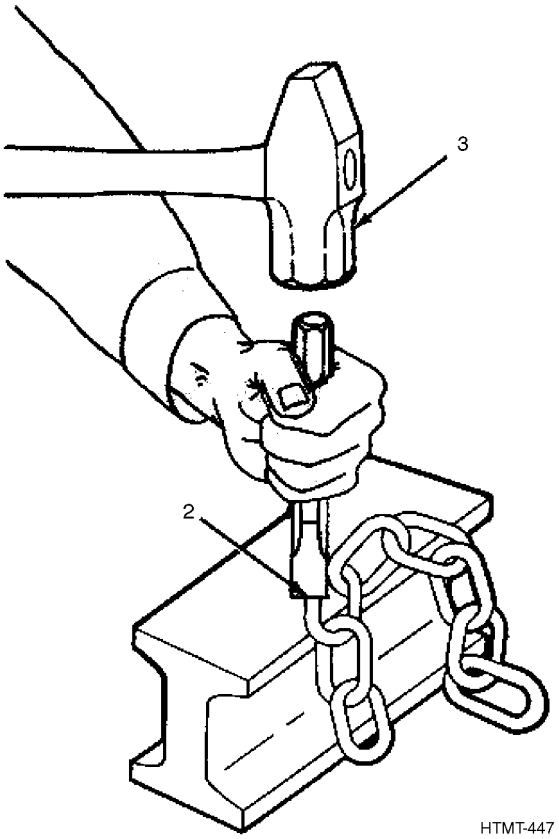

3. Place cutting edge (2) of chisel on the mark with chisel straight up and down.

4. Lightly strike the chisel with a hammer (3) and check chisel mark to be sure you are cutting on the desired mark.

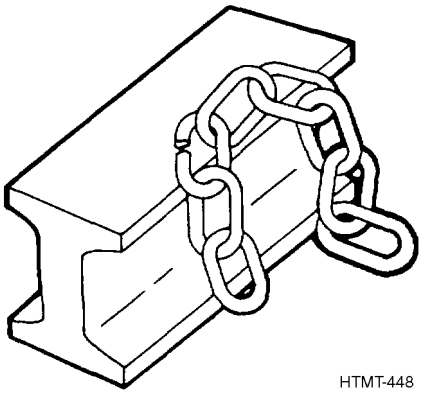

5. Continue striking chisel with the hammer until cut is through the round stock. A larger diameter stock is cut the same way except it is turned over after the cut is about half way through the rod.

26.5 USING A RIVET BUSTER CHISEL.

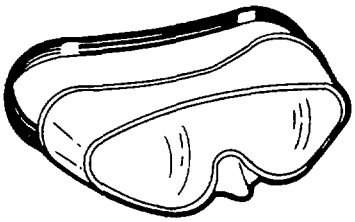

WARNING

Wear eye protection.

NOTE

The following procedures are designed for using a rivet buster chisel.

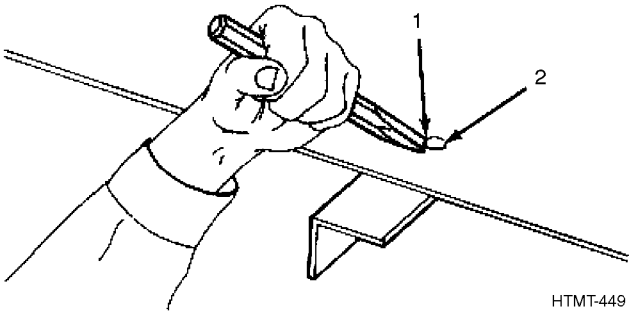

1. Place cutting edge (1) of the chisel firmly against the rivet shaft (2) between the head and the metal.

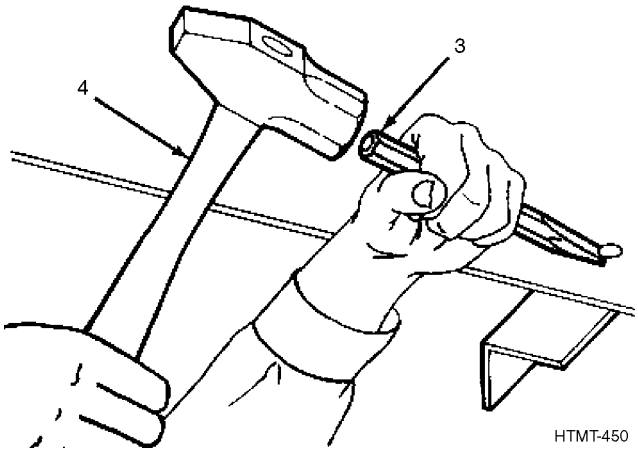

2. Grip the chisel firmly and strike chisel head (3) with a machinist's or sledge hammer (4).

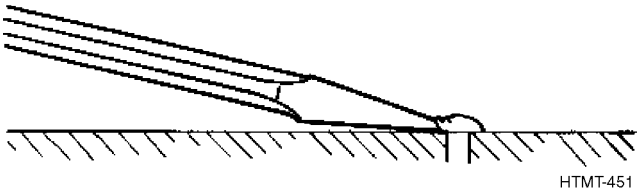

3. Continue striking chisel head until rivet head has been cut off.

26.6 CARE OF CHISELS.

1. Protect the cutting edges by installing protective covers.
2. Store in racks or where they may not be chipped or broken.
3. Lubricate with a light coat of oil before storing.
4. Regrind broken or chipped edges before using.

CHAPTER 27
PUNCHES

27.1 HOW TO CHOOSE AND USE THEM.

Types and Uses, Paragraph 27.2, provides you with a list of, some of the types of punches. These pages should help you select the right punch to do the job. Using, Paragraph 27.3, tells you how to use the punch to perform the desired function. Care of Punches, Paragraph 27.6, tells you how to care for the items.

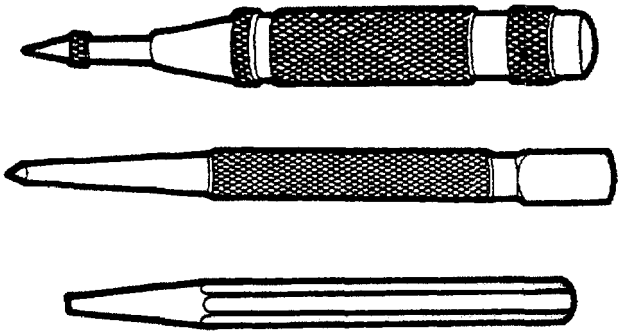

HTMT-452

27.2 TYPES AND USES.

There are two basic types of punches; solid (1) which are the most common, and hollow (2) which are usually designed for punching holes in leather, paper, and other similar materials. Solid punches are used to mark metal, drive pins, align holes and to do other similar jobs.

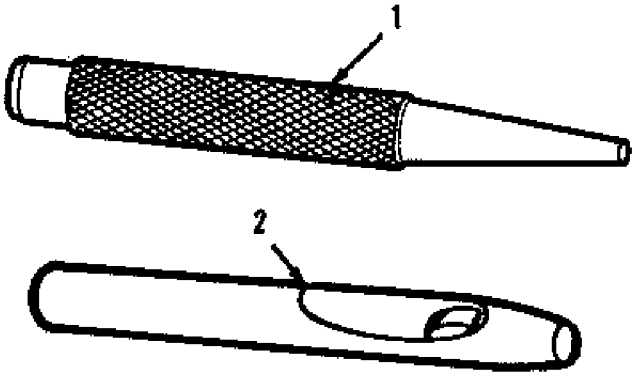

HTMT-453

27.2.1 Center Punches. There are two types of center punches, both used for starting drill holes.

HTMT-454

The hand-held type has a narrow, cone-shaped point terminating in a sharp, conical tip. Hand-held types range from 1/8 to 5/8 inches in diameter and from 3 to 6 inches long. The hand-held punch must be struck with a hammer.

HTMT-455

The automatic type has an adjustable regulator for determining the impact of the punch and also has interchangeable points. The automatic punch contains a tension spring for marking without the use of a hammer.

27.2.2 Drift Punch.

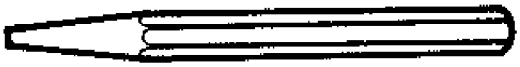

HTMT-456

The drift punch has a narrow, tapered flat point. The points range in size from 1/8 to 1/2 inch in diameter with an overall length from 7 to 9 inches. Drift punches may be used to remove shafts, pins, rivets (after heads have been removed), and to align small parts.

27.2.3 Alignment Punch.

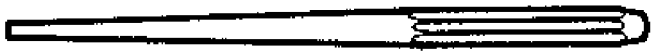

HTMT-457

The alignment punch has a narrow, tapered flat point. The points range in size from 1/8 to 1/2 inch in diameter with an overall length of 12 to 15 inches. Alignment punches are used to line up mating parts for assembly. Make sure the punch is large enough for the job. A punch that is too small may bend or break.

27.2.4 Drive Pin Punch.

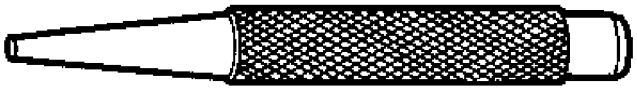

HTMT-458

The drive pin punch has a flat tip which may be tapered. Points may range in size from 0.03 to 1/2 inch and are from 3 to 6 inches long. Standard drive pin punches usually come in sets of nine. Drive pin punches are used to remove straight or tapered pins. Make sure the right size punch is used for the pin being removed.

27.2.5 Prick Punch.

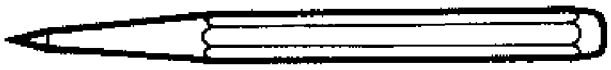

HTMT-459

The prick punch has a long, conical-shaped point and ranges from 4 to 5 inches in length overall. It is used to mark soft metal.

27.2.6 Starting Punch.

HTMT-460

The starting punch has a strong tapered point capable of resisting applied force. It is used to start the removal of a pin from an assembly.

27.2.7 Grommet-Inserting Punch.

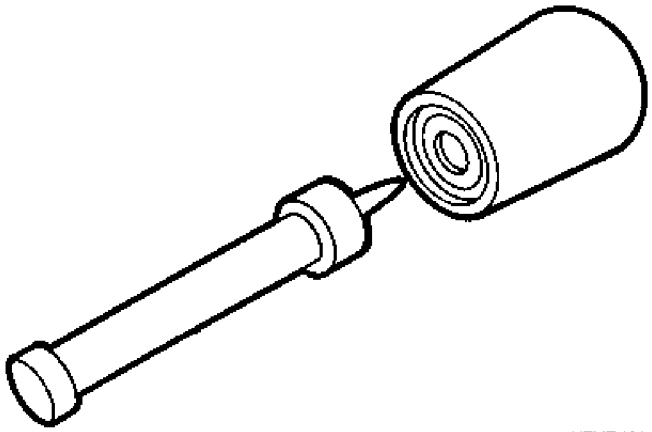

HTMT-461

The grommet-inserting punch consists of two parts. The solid punch part has a tapered point and a flat shoulder. The round die part has flat ends with a bored hole in one end to receive the point of the punch. Grommet-inserting punches are used to form the flange on grommets which are installed along the edges of flags, sails, mail bags, and similar items.

27.2.8 Catapunch.

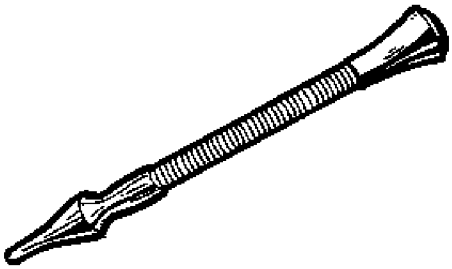

HTMT-462

The catapunch consists of a pointed head mounted on a coiled spring shaft. It is used to mark centers on metal or wood without the use of a hammer.

27.2.9 Metal Cutting Punch.

HTMT-463

The metal cutting punch has an open, sharpened edge on one end and a solid shaft on the other end. The center portion of the punch is bowed for catching the metal scrap. The metal cutting punch ranges in size from 1/4 inch to 1 inch. Metal cutting punches are used to punch holes in thin sheet metal and require the use of a mallet or machinist's hammer.

27.2.10 Tinmen's Hollow Punch.

HTMT-464

The tinmen's hollow punch has a solid metal shank terminating in a sharpened, hollowed end. It is used to punch holes through thin sheet metal.

27.2.11 Sheet Metal Punch.

HTMT-465

The sheet metal punch is a heavy-duty steel punch approximately seven inches in length. It tapers to a fine point and must be struck to produce the hole. It is used to punch holes through sheet metal to take fastenings.

27.2.12 Lever Punch.

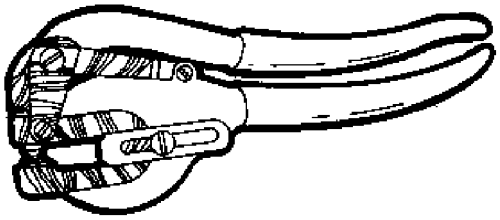

HTMT-466

The lever punch incorporates an interchangeable punch and a matching die or "anvil." The die backs up the material, prevents distortion, and leaves a clean hole. This type of punch is used to punch small round holes near the edges of metal or leather material.

27.2.13 Screw Punch.

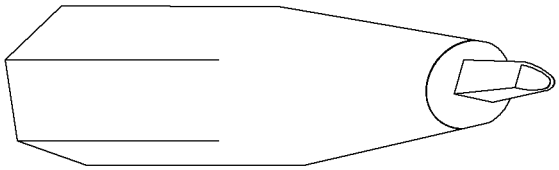

The screw punch is a common screw removal tool which is locally manufactured by metals technology shops. Accomplish all local manufacture in accordance with local procedures and quality assurance mandates. The screw punch is used to loosen over-torqued and corroded screws. To make a common screw punch like the one shown in Figure 5-16, use a 5 inch to 6 inch long piece of 1 - 1.250 inch steel or brass hex stock and a 3/8 inch high-speed steel tool bit.

NOTE

Specific configurations or modification of screw punch construction can be accomplished to properly meet specific on-site situations.

Drill a hole in the end of the hex handle to a depth equal to half the length of the tool bit. Make the diameter of the hole slightly less than the dimension across the corners of the tool bit. This allows you to press the tool bit into the handle. Round all sharp corners and grind the end of the tool bit square before you press it into the hole. After you press the tool into the holder, chamfer the end of the punch's body nearest the tool bit to assure visibility and clearance from the parent part. Then grind the working end of the tool bit to approximately a 10 degree angle. The angle allows the cutting edge to dig into the screw head enough to prevent slipping, but not so much that it acts like a chisel. Grind the top and sides of the tool bit round to keep them from digging into the area around a screw. Be sure to also round the handle. Just as with a chisel or punch, rounding the handle prevents the end from mushrooming. Since the tool bit can shatter, tape all but the last 1/4 inch to keep the pieces from flying if the bit does break.

27.3 USING A CENTER PUNCH.

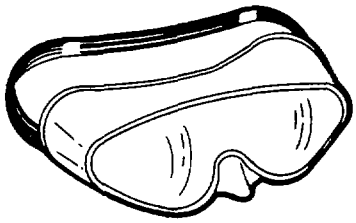

WARNING

Wear eye protection.

NOTE

The procedure which follows is only one of many uses of a hand-held center punch.

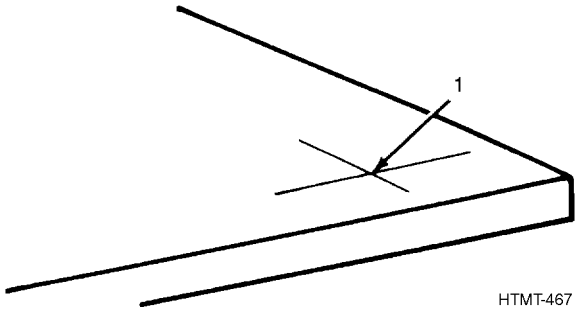

1. Mark the material to be punched with an “X” (1).

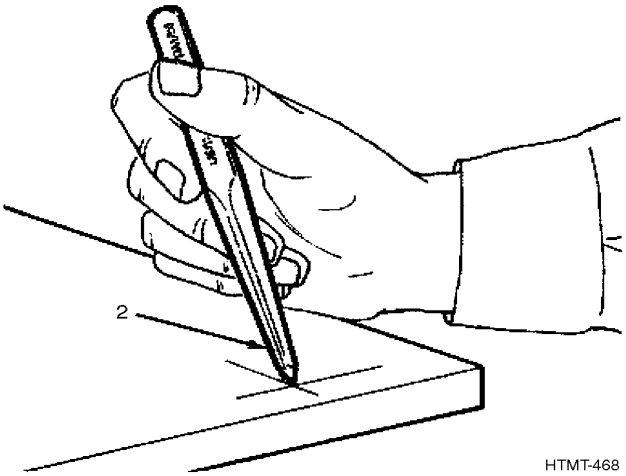

2. Hold the punch (2) over the mark. Tilt it so that you can align the tip with the center of the “X”.

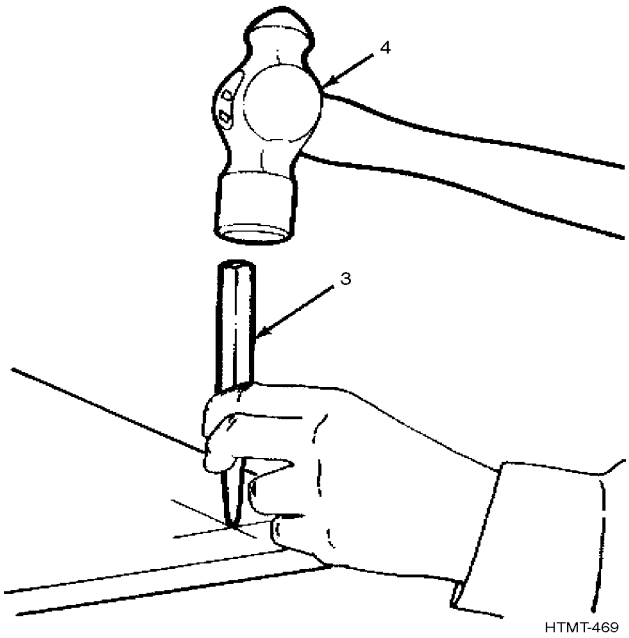

3. Position the punch upright and strike the blunt end (3) of the punch with a hammer (4).

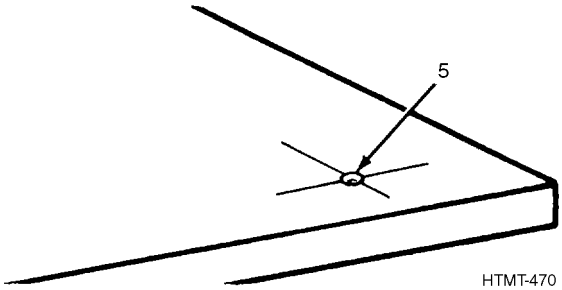

4. Remove the punch and check your mark (5). If it is not in the center of the “X” or not deep enough, you will have to repeat the procedure.

27.4 USING A DRIFT PUNCH.

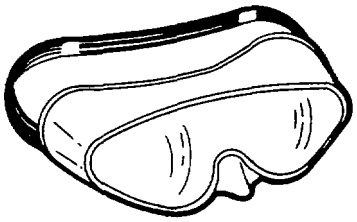

WARNING

Wear eye protection.

NOTE

The removal of a pin from a shaft is only one of many uses for a drift punch.

1. Select a punch which is slightly smaller than the pin which is to be removed. Care must be taken when selecting a punch for removing a split pin. If the punch is too small, it may become lodged in the pin.

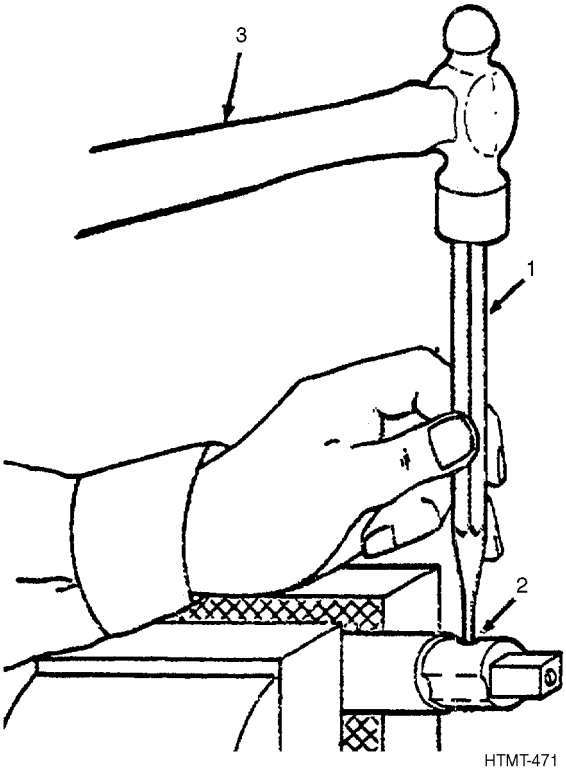

2. Hold punch (1) centered over pin (2). Tap punch lightly with hammer (3). This should move the pin. It may be necessary to apply penetrating oil to the pin before it will move.

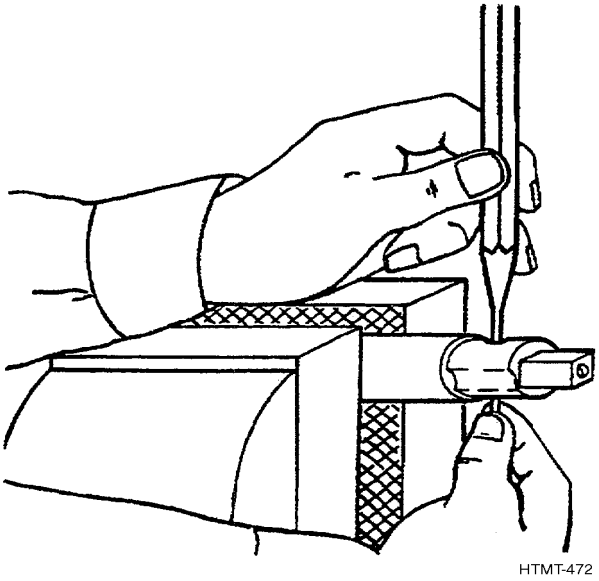

3. Catch the pin before it falls out of the shaft. When the pin is about half way out of the shaft, you can let go of the punch.

27.5 USING AN ALIGNMENT PUNCH.

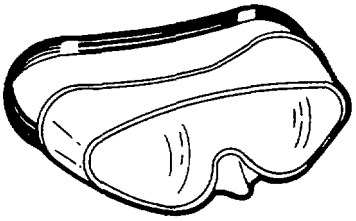

WARNING

Wear eye protection. Do not strike the punch with a hammer.

NOTE

The following procedure is for using an alignment punch. This tool, unlike others, has only one basic use.

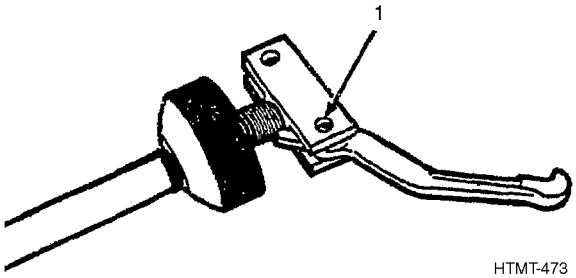

1. Select a punch having a smaller diameter than the smallest hole (1) to be aligned.

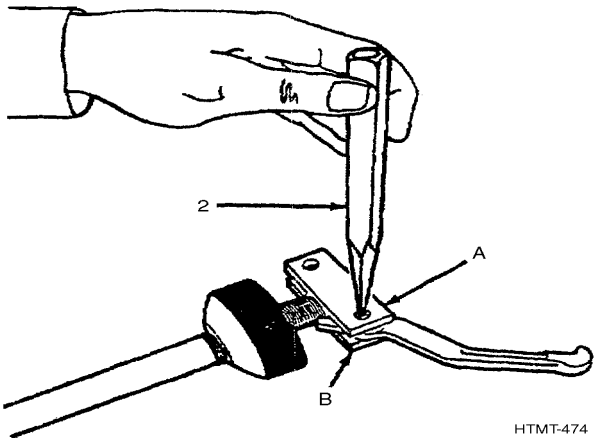

2. Insert tip of punch (2) through hole in part A using only hand pressure, and move punch and part A until you can get the tip of the punch into part B.

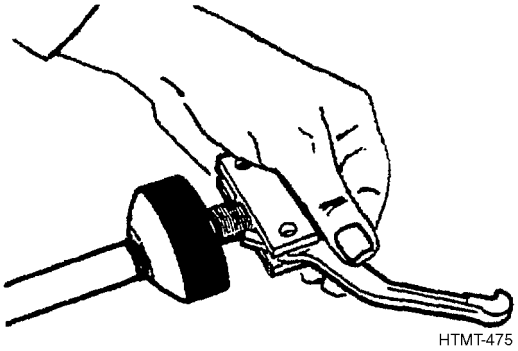

3. Hold the assembled parts while you remove the punch. Proper use of an alignment punch prevents damaging threaded parts.

4. Place screw in aligned holes and tighten.

27.6 CARE OF PUNCHES.

1. Clean punches with a clean rag after each use.

2. Apply a light coat of oil before storing.

3. Store punches in racks, tool rolls, or in your tool box so that the edges will not be damaged.

4. Replace punches that have mushroomed ends if they cannot be reconditioned, (See NOTE, page 1-1).

27.7 SCREW PUNCH USAGE.

Screw punches may be used to loosen stuck or corroded screws. To start, hold the screw punch at about a 10 to 15 degree angle in the direction of rotation. Seat the tool on the flat portion of the screwhead, next to the slot. Tap the tool a couple of times to seat it in the screw. Next, angle the tool back about 30-45 degrees. Use a series of light taps with the hammer since heavy blows can cause you to skip off the screw head and damage the parent part. Use this technique to simply break the torque on the screw. Turn the screw about a quarter of a turn with the tool, then use a screw driver or a speed handle to remove the screw the rest of the way.

NOTE

This tool is strictly for use by technicians trained and documented on its proper and safe usage. Always assure proper support of the panel or parent part prior to using a screw punch to loosen stuck or corroded screws. Improper support can cause significant chisel slippage, panel damage, and/or substrate damage.

CHAPTER 28
FILES

28.1 HOW TO CHOOSE AND USE THEM.

Types and Uses, Paragraph 28.2, provides you with a list of some of the types of files. These pages should help you select the right file to do the job. Using a File, Paragraph 28.4, tells you how to use the file to perform the desired function. Care of Files, Paragraph 28.5, tells you how to care for the items.

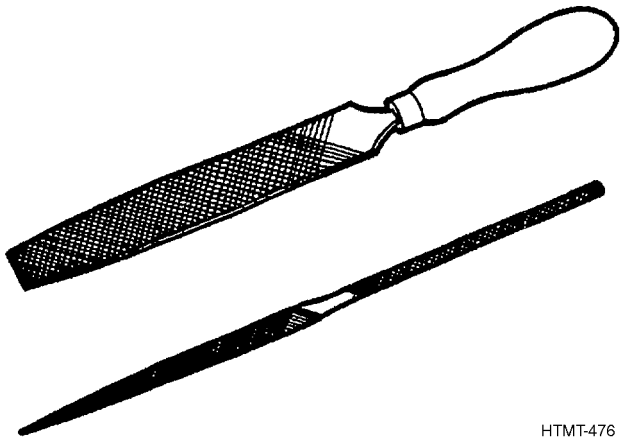

28.2 TYPES AND USES.

Files are used for cutting, smoothing off, or removing small amounts of metal, wood, plastic, or other material. Files are made in various lengths, shapes, and cuts. Every file has five parts: the point (1), edge (2), face or cutting teeth(3), heel or shoulder (4) and tang (5). The tang is used to attach the handle on American pattern files. The tang is shaped into a handle and is usually knurled on Swiss pattern files.

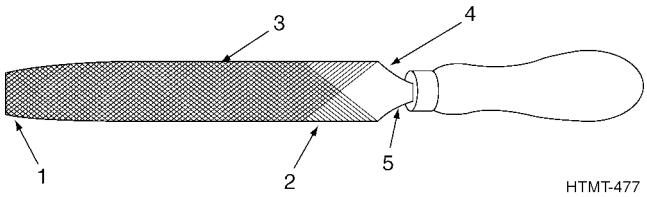

28.2.1 American Pattern File.

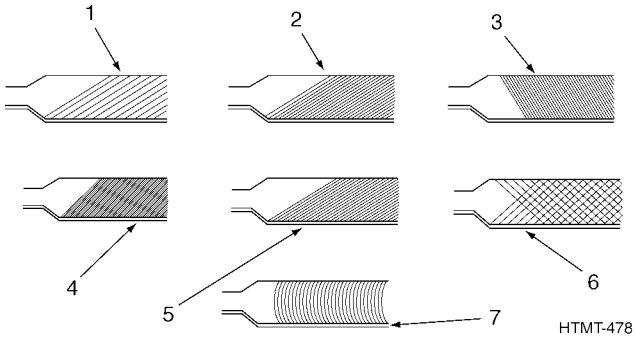

American pattern files are generally used for fast removal of material and where a precision finish is not required. Grades of coarseness are bastard-cut for heavier work (1), second-cut (2) and smooth-cut (3) for finishing work, and dead smooth-cut (4) for an extra fine finish. American pattern files come with single-cut (5), double-cut (6), or curved-cut teeth (7). Single-cut files are used with light pressure for smooth surfaces or to put a keen edge on cutting surfaces. Double-cut files are used under heavier pressure and where a rougher finish is permissible. Curved-tooth files are cut in a contour across the face and are used to smooth surfaces on aluminum, bronze, lead, babbitt, zinc, and plastics.

28.2.2 Mill File.

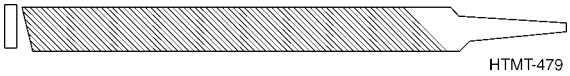

Mill files are tapered to the point in width and thickness for about one-third of their lengths. They are single-cut with one uncut edge. They are used to sharpen mill or circular saws, and for draw-filing or finishing metals.

28.2.3 Pillar File.

Pillar files are similar to hand files in general shape, but are much narrower. They are double-cut with one uncut edge. Pillar files are used to file in slots and keyways.

28.2.4 Round File.

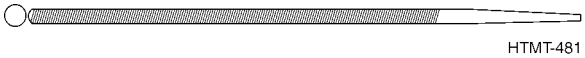

Round files taper slightly toward the point.

Bastard-cut files 6 inches and longer are double-cut. The second-cut files, 12 inches and longer, are double-cut. All others are single-cut. Round files are used for filing circular openings or concave surfaces.

28.2.5 Square File.

Square files taper slightly toward the point on all four sides and are double-cut. They are used for filing rectangular slots and keyways.

28.2.6 Taper File.

Taper files, or triangular files, are tapered toward the point on all three sides. They are used for filing saws having 60 degree angle teeth. Taper files come in regular, slim, extra slim, and double extra slim and usually are single-cut.

28.2.7 Three-Square File.

Three-square files are tapered toward the point on all three sides and are double-cut. They are used for filing internal angles, and for cleaning out square corners.

28.2.8 Warding File.

Warding files are tapered to a point for narrow space filing. They have double-cut faces and singlecut edges. Warding files are used for lock repair or for filing ward notches in keys.

28.2.9 Curved-Tooth File. Curved-tooth files, also known as mill-toothed files, are generally used on aluminum and sheet steel and on flat or curved surfaces. They are also used for smooth, rapid work on bronze, lead, babbitt, zinc, and plastic.

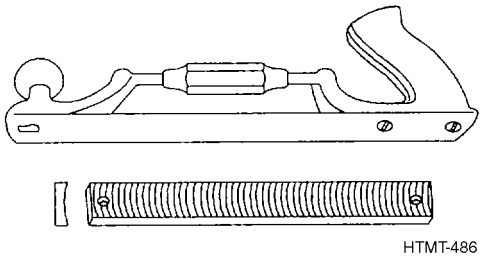

Flat, flexible, curved-tooth files do not have tangs and are made for easy mounting on a file holder. The file holder is adjustable for concave or convex surfaces. Flat, flexible, curved-tooth files come in fine-cut and standard-cut teeth.

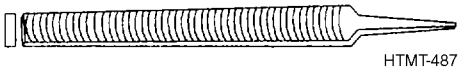

Flat, rigid, curved-tooth files are self-cleaning and used-for filing flat surfaces on cast iron, lead, babbitt, aluminum, zinc, and plastic. They come in smooth-cut and standard-cut teeth.

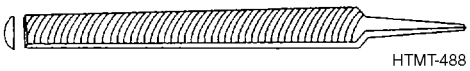

Half-round, rigid, curved-tooth files are flat on one side and convex on the other. They are used for filing concave surfaces and bearings. They come with standard-cut teeth.

28.2.10 Swiss Pattern File.

Swiss pattern files are made to more exact measurements than American pattern files. They are primarily finishing tools used on all sorts of delicate and intricate parts. Swiss pattern files come in a variety of styles, shapes, sizes, and double and single cuts to insure precision smoothness.

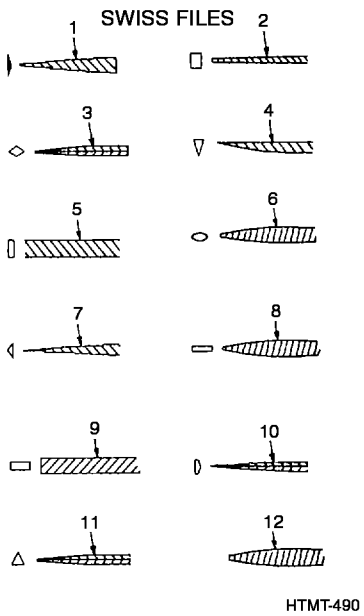

These files are usually supplied in sets. The most common set consists of twelve assorted files in a set which are marking (half-round) (1), square (2), slitting (3), knife (4), joint (round edge) (5), crossing (oval) (6), barrette (7), flat (8), equaling (9), half-round (10), three-square (triangular) (11), and round (12).

Swiss parrern files are made in seven cuts. Nos. 00, 0, 1, 2, 3, 4, and 6. They are most often used for fitting parts of delicate mechanisms, and for tool and die work.

28.3 SAFETY.

1. If a file is designed to be used with a handle, do not attempt to use it without the handle. Holding the sharp tang in your hand while filing can cause serious injury.

2. Do not use a file for prying. The tang end is soft and it bends easily. The body of the file is hard and very brittle. A light bending force will cause it to snap.

3. Do not hammer on a file. This is very dangerous because the file may shatter.

28.4 USING A FILE.

28.4.1 Selecting Proper File.

1. For heavy, rough cutting, use a large, coarse, double-cut file.

2. For finishing cuts, use a second of smooth-cut, single-cut file.

3. When working on cast iron, start with a bastard-cut file and finish with a second-cut file.

4. When filing soft metal, start with a second-cut file and finish with a smooth-cut file.

5. When filing hard Steel, start with a smooth-cut file and finish with a deed-smooth file.

6. When filing brass or bronze, start with a bastard-cut file and finish with a second or smooth-cut file.

7. When filing aluminum, lead, or babbitt metal, use a standard-cut curved-tooth file.

8. For small work, use a short file. For medium-sized work, use an 8-inch file. For large work, use a file that is most convenient.

28.4.2 Method of Filing.

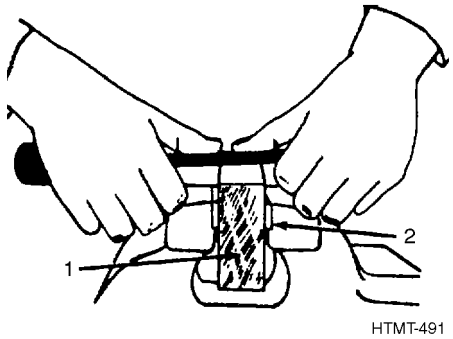

1. Clamp the work (1) securely in a vise so that the area to be filed is horizontal and is parallel to and projecting slightly above the vise jaws (2).

2. Hold the file handle in one hand, thumb on top, and hold the end of the file with the fingers of the other hand.

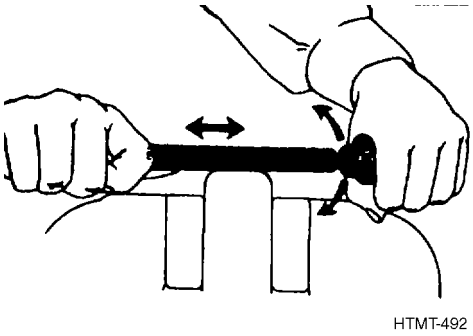

3. When filing hard metals, apply pressure on the forward stroke only. Unless the file is lifted from the work on the

return stroke, it will become dull much sooner than it should.

4. When filing soft metals, using pressure on the return stroke helps keep the cuts in the file clean.

5. Use a rocking motion when filing round surfaces.

6. When using a new file, applying too much pressure will cause the teeth to break off. Do not force the file. File slowly, lightly, and steadily. Too much speed and too much pressure causes the file to rock, rounding off the corners of the work.

28.4.3 Draw Filing.

1. Draw filing is used to produce a very smooth and true surface. Hold the file at right angles to the direction of the strokes, keeping your hands close together to prevent bending and breaking the file.

2. Pressure should not be great and can remain the same on the back stroke as on the draw stroke. The speed of filing is not important.

3. For extra smooth surfaces, wrap a piece of emery cloth around the file and stroke in the same manner.

28.5 CARE OF FILES.

1. A new file should be broken in by using it first on brass, bronze, or smooth iron.

2. Never use a new file to remove the fins or scales on cast iron.

3. Do not use a new file on a narrow surface such as sheet metal, because the narrow edge of the metal is likely to break off the sharp points on the file teeth.

4. After using a new file, the teeth will clog up with metal filings.

5. Using a clogged file will scratch the work. This condition is called pinning.

6. One way to help prevent pinning is by rubbing chalk between the teeth before filing.

7. The best method to keep the file clean is to use a file scorer and file cleaner brush.

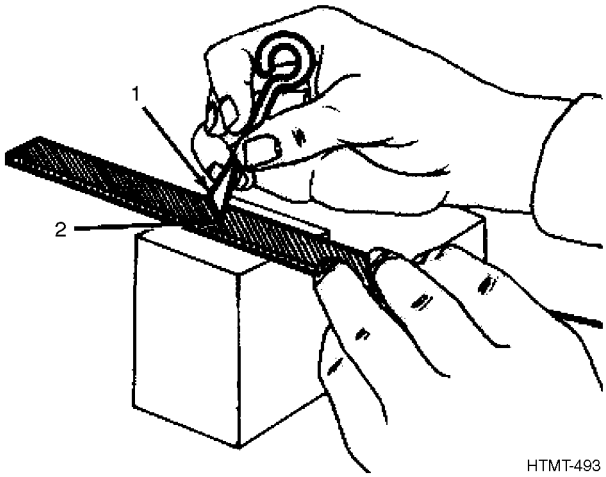

8. When cleaning a file with a file scorer (1), use a pulling motion, holding the file scorer blade parallel to the rows of teeth (2).

9. Finish cleaning by brushing the file parallel to the rows of teeth, with the file cleaner brush.

10. Do not throw files into a drawer or toolbox where they can rub against each other or against other tools. Store them in separate holders such as clips, straps, or in holes cut in a block of wood.

11. Clean files often.

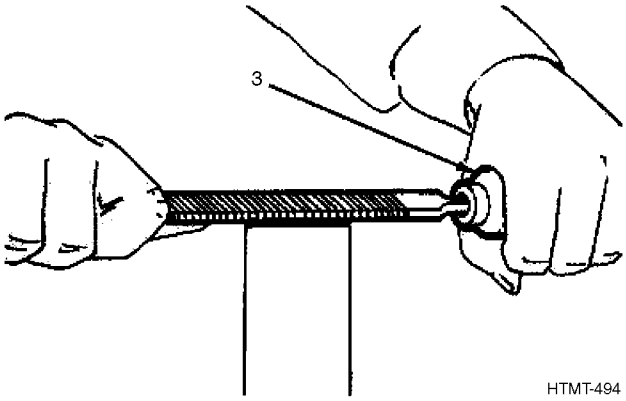

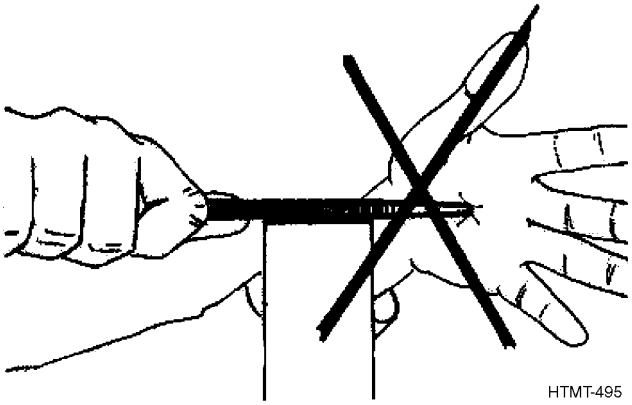

12. Never use a file without a securely attached handle (3), unless it is of the Swiss pattern type.

13. Do not use files for any other use except filing.

14. Do not oil files. This will cause the file to slide across the work, preventing fast cutting.

15. Never strike the file against a vise or other object to remove filings. Use the file cleaner brush.

16. Never store files with lubricants or rust-preventive compounds on them. Wrap each file in a waterproofed barrier wrapping paper and place the files in racks or boxes so that the faces or edges of the files will not touch each other.

28.6 REPLACING THE HANDLE.

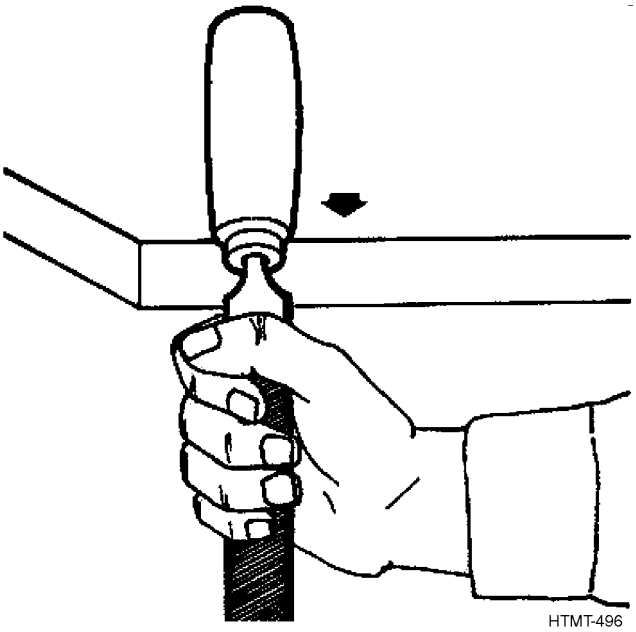

1. To remove a handle, hold the file with one hand. Pull the file from the handle while striking the ferrule end of the handle against the edge of a bench.

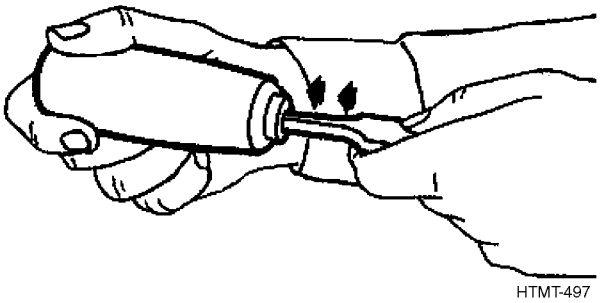

CAUTION

Never hammer a file into its handle.

2. To install a new handle, insert tang end of file into handle socket exerting pressure with your hands.

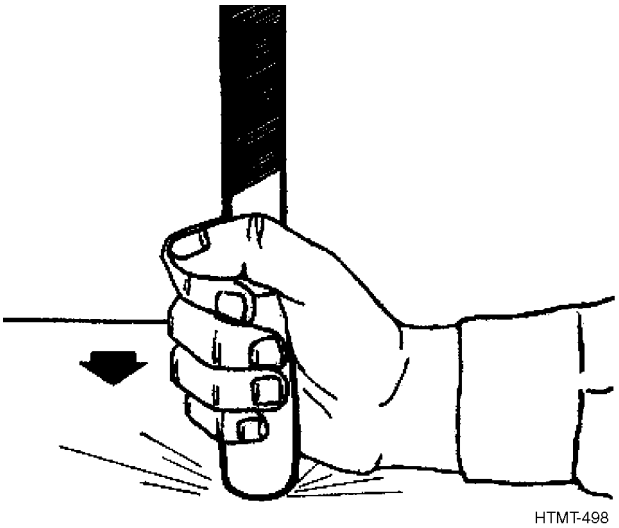

3. Tap the handle on the bench top until the file is seated.

CHAPTER 29
GRINDERS AND SHARPENING STONES

29.1 HOW TO CHOOSE AND USE THEM.

Types and Uses, Paragraph 29.2, provides you with a list of some of the types of grinders and sharpening stones. These pages should help you select the right sharpening instrument to do the job. Using, Paragraph 29.3, tells you how to use the sharpening instrument to perform the desired function. Care, Paragraph 29.5, tells you how to care for the items.

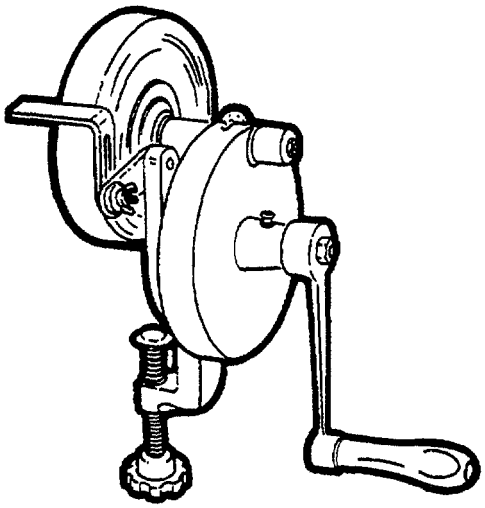

HTMT-499

29.2 TYPES AND USES.

Grinders are mechanical devices which allow you to reshape, form, and sharpen metal cutting tools or other tools. A grinder consists of an abrasive wheel mounted on a rotatable shaft. The abrasive wheels are available in varying degrees of coarseness, depending upon type of metal to be ground. Sharpening stones may be either natural or artificial. Natural stones are of a finer grain than the artificial stones.

29.2.1 Bench Grinder.

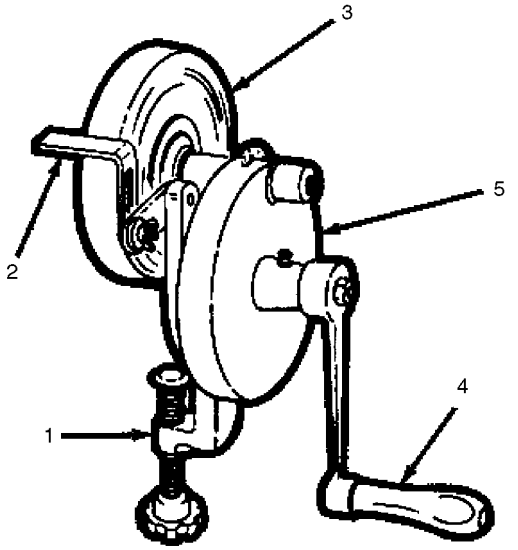

HTMT-500

Bench grinders are used for reshaping and sharpening chisels, drills, hatchets, and other similar small hand tools.

The bench grinder consists of a clamp (1), a rest (2), an abrasive wheel (3) a handcrank (4), and an encased gearing assembly (5). The clamp is used for fastening the grinder to a working surface. The rest supports tools which are being ground. It is adjustable and may be moved from side to side. The abrasive wheel may be changed depending upon the type of metal being ground.

29.2.2 Valve Grinder.

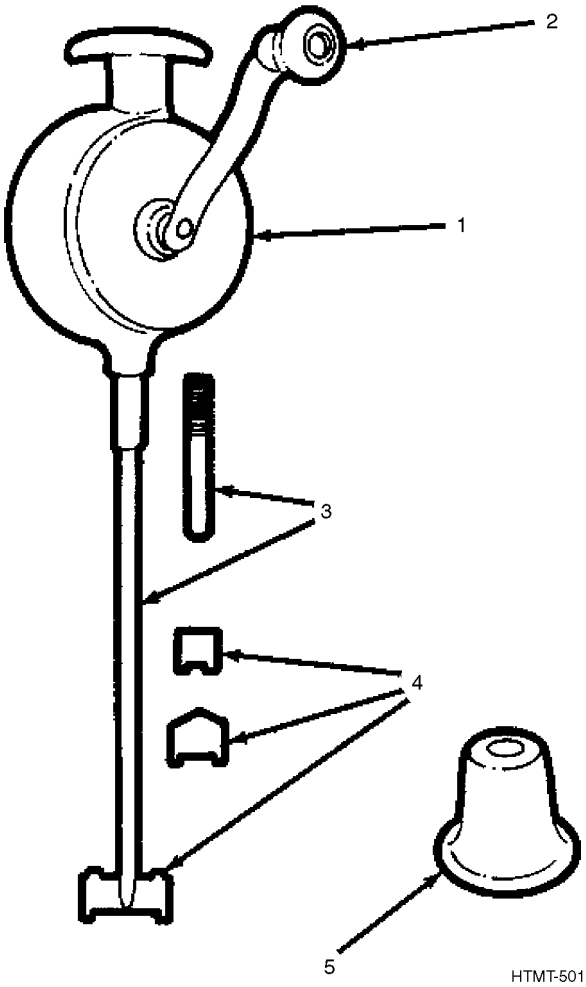

The valve grinder is a hand-operated special grinder. It is used for grinding the valve seating surfaces on combustion engines. It grinds with cutting blades on a rotating shaft instead of an abrasive wheel. It consists of an encased gear housing (1), a handcrank (2), interchangeable shafts (3), cutting blades (4), and a suction cup (5). The suction cup is used in place of a blade to grind non-slotted valves to fit seating surfaces.

29.2.3 Sharpening Stones. Sharpening stones usually have one coarse face and one fine face. This could combine the coarse artificial stone with the fine natural stone. The coarse edge is used to remove nicks and to reshape the tool being sharpened. The fine edge is used to complete the sharpening process and put a keen edge on the tool. Sharpening stones are available in various shapes and sizes, as shown.

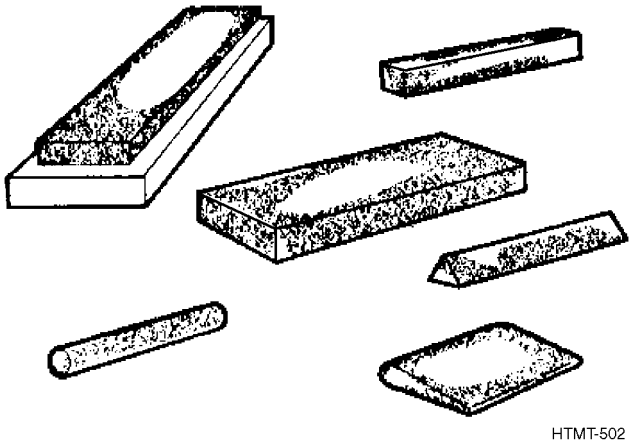

29.3 USING A BENCH GRINDER.

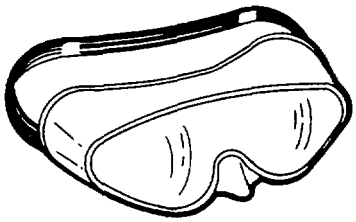

WARNING

- Wear eye protection and watch the finger.
- Hold tools being shaped firmly so they will not cause injury.

CAUTION

Never use a cracked wheel. Before using a wheel, tap it lightly with a mallet. A ringing sound indicates that the wheel is satisfactory; a dull sound indicates that the wheel may be cracked.

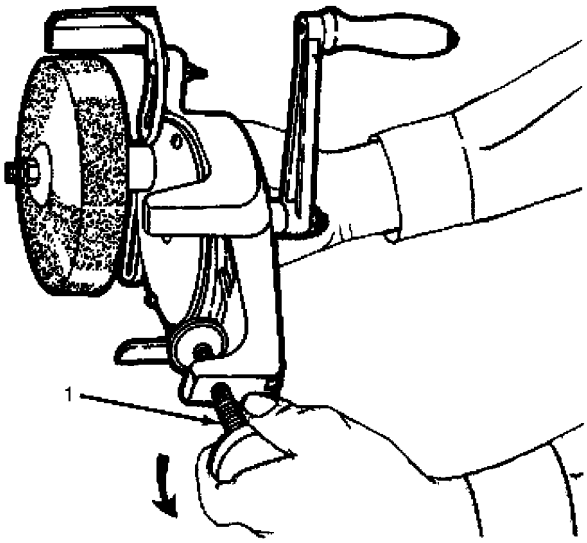

HTMT-503

1. Before using, inspect the grinder and abrasive wheel, checking for cracks or breaks on exposed surfaces.
2. Unscrew the mounting clamp (1) to allow the grinder to be positioned on the bench.

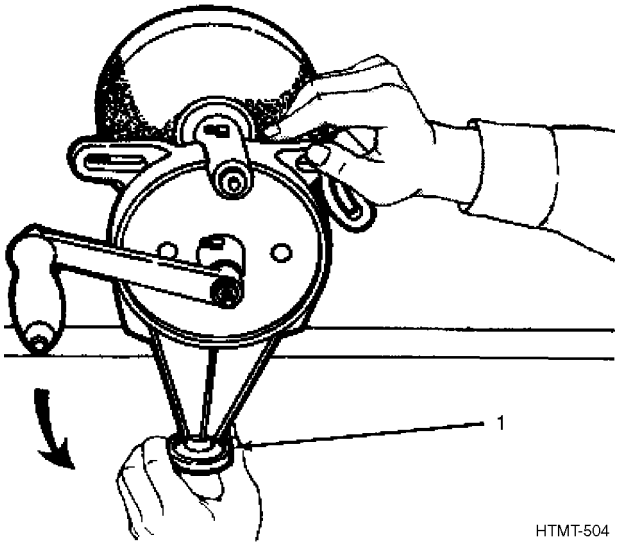

HTMT-504

3. Position grinder where it will be used and tighten the mounting clamp (1) to hold securely on the bench.

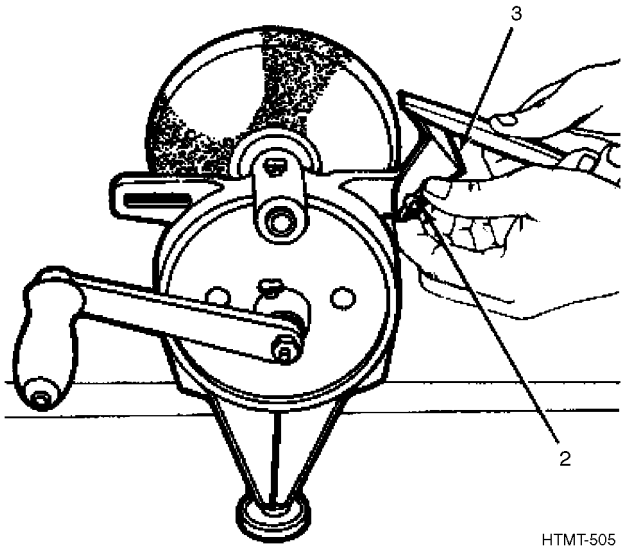

HTMT-505

4. Loosen the wing nut (2) on the rest (3). Adjust the rest (3). Tighten the wing nut (2).
5. Support the tool to be ground on the rest (3).

NOTE

Since user must use both hands to hold tool to the wheel, another person is required to turn the hand-crank in a counterclockwise direction.

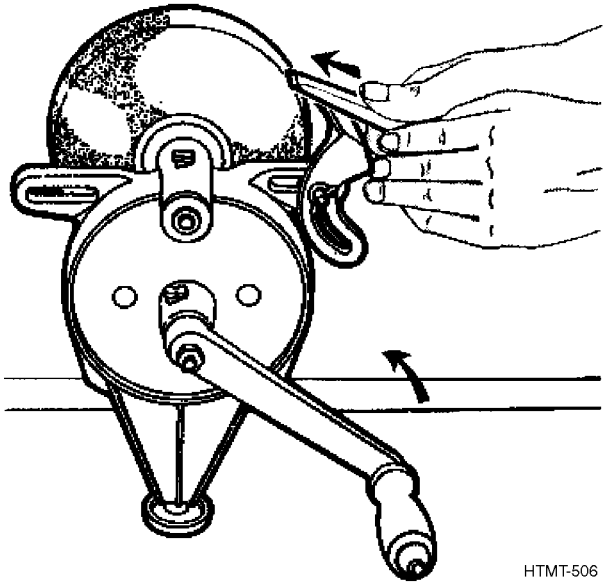

6. Rotate the handcrank and move the tool forward until it makes contact with the wheel.

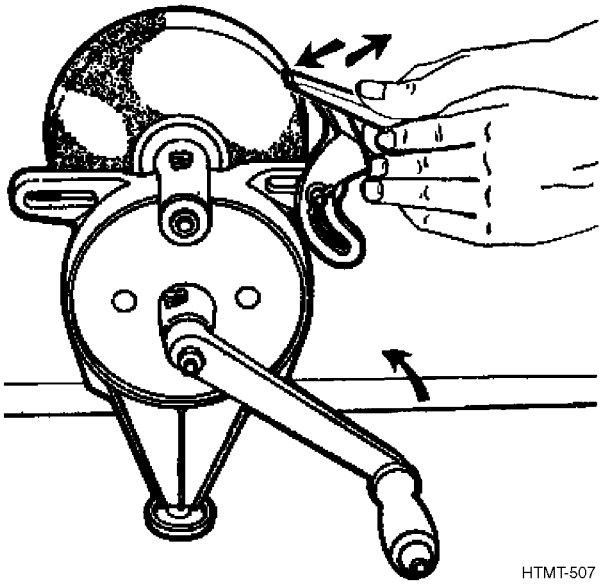

7. Move the tool back and forth across the abrasive wheel face to be sure of an evenly ground surface.

8. Stop grinding occasionally to check for the desired edge.

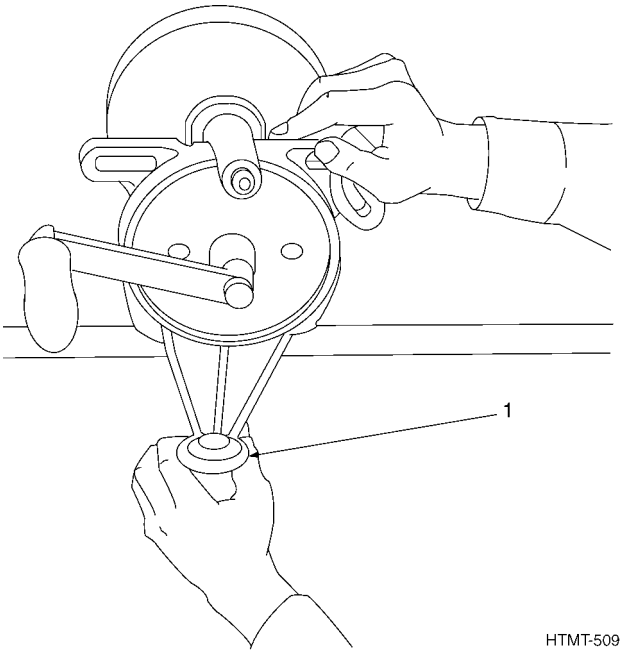

9. When the desired edge is obtained, you are finished. Remove grinder from bench by loosening the clamp (1). Store grinder in its designated storage area.

29.4 USING A SHARPENING STONE.

NOTE

Unless stone is already oil-impregnated, apply a light coat of oil before and during use.

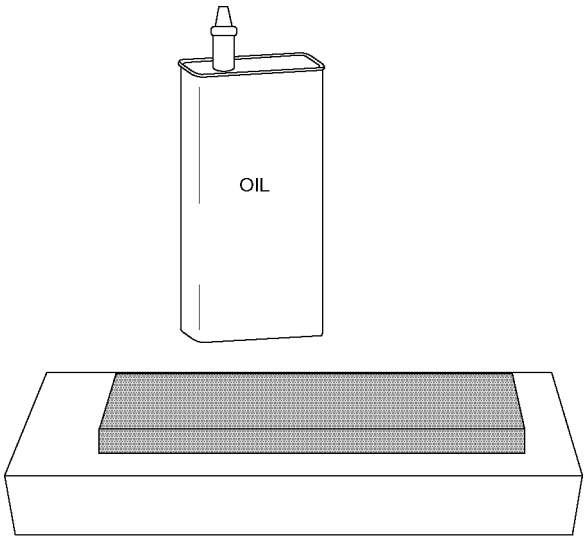

HTMT-510

WARNING

Keep your fingers clear of the hinge area of a pocket knife.

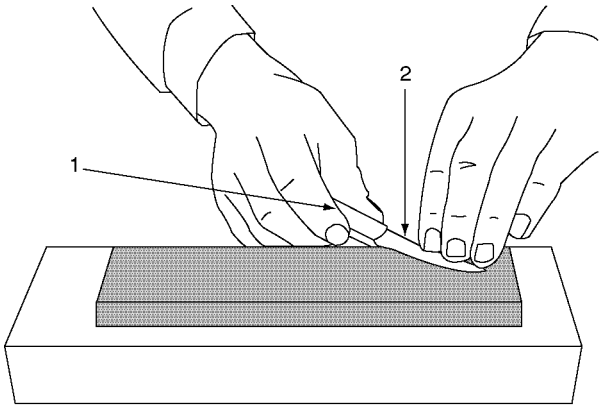

HTMT-511

1. Hold the handle (1) of the blade to be sharpened in one hand and extend the blade (2) across the stone.

2. Press down on the blade with the fingers of the other hand.

3. With a circular motion, stroke the blade with the sharp edge trailing.

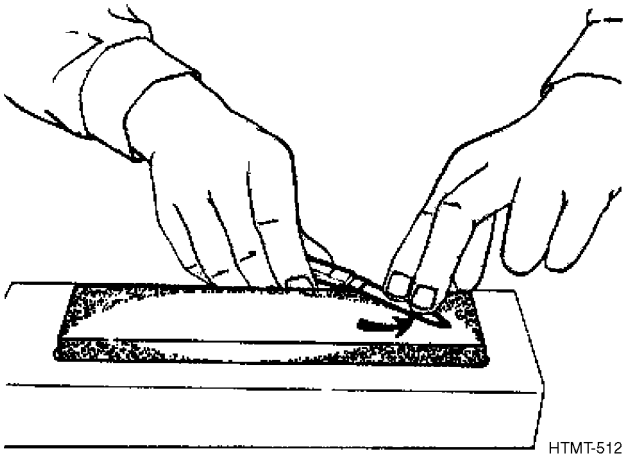

HTMT-512

4. After several strokes, reverse the blade and stroke the other side in a similar manner. Use light, even pressure.

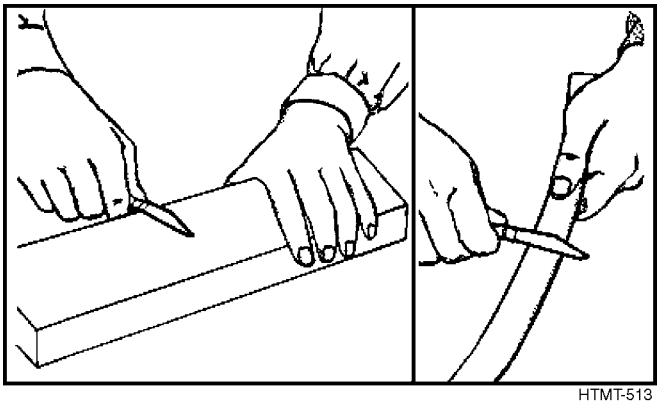

HTMT-513

5. Repeat stroking action until the desired edge is obtained.

6. The wire edge left on blade by using a stone may be removed by stroking both sides on a soft wood block, canvas, or leather.

29.5 CARE OF BENCH GRINDERS.

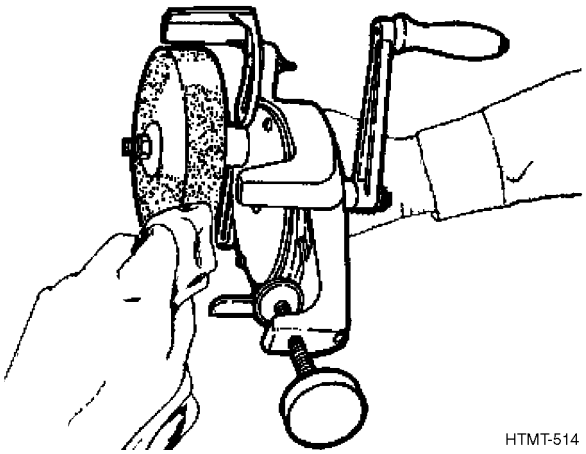

HTMT-514

1. Wipe oil and grease from all outside surfaces before and after each use.

2. Tighten all housing screws before and after each use.

3. Before using, check to be sure that the abrasive wheel is not cracked or broken.

29.6 CARE OF SHARPENING STONES.

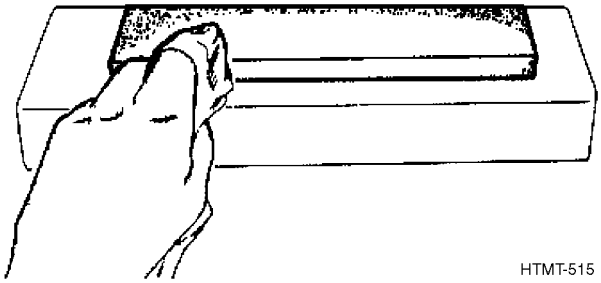

1. Prevent glazing of stone by applying light oil while using.

2. Wipe excess oil and grit from stone with a clean rag after each use.

3. Clean stone with dry cleaning solvent when it becomes glazed or gummed up.

4. Store in a clean dry place and/or wrap in clean cloth.

CHAPTER 30
SCRAPERS

30.1 HOW TO CHOOSE AND USE THEM.

Types and Uses, Paragraph 30.2, provides you with a list of time of the types of scrapers. These pages should help you select the right scraper to do the job. Using, Paragraph 30.4, tells you how to use the scraper to perform the desired function. Care of Scrappers, Paragraph 30.5, tells you how to care for the items.

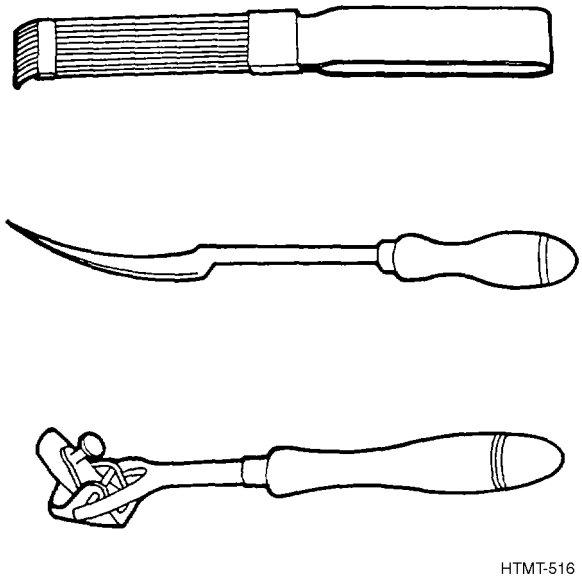

30.2 TYPES AND USES.

Scrapers are made in different shapes for various types of work. Some scrapers are used for trueing metal, wood, and plastic surfaces which have been machined or filed. Other scrapers are made to remove paint, stencil markings, and other coatings from various surfaces.

30.2.1 Carbon Scraper.

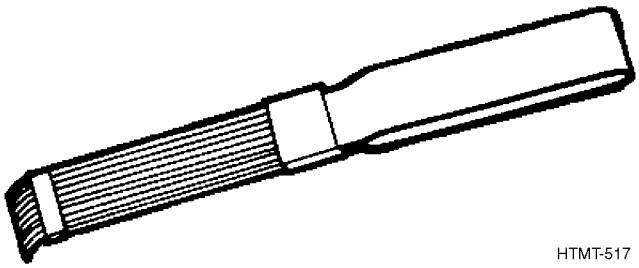

A carbon scraper is used to clean carbon from cylinder heads, pistons, and other metal surfaces. It is flexible and has an overall length of approximately 9 inches. The carbon scraper consists of ten round spring steel blades, and their flexibility is controlled by a sliding ferrule.

30.2.2 Bearing Scraper.

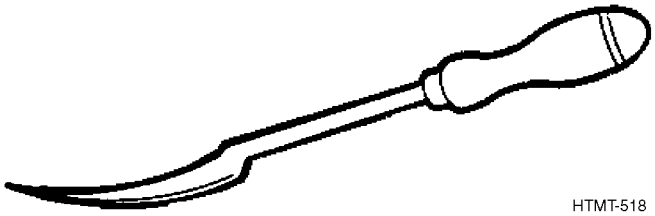

Bearing scrapers are used to scrape babbitt metal bearings. Bearing scrapers come with 1-1/2, 2, and 4-inch cutting edges.

30.2.3 Box Scraper.

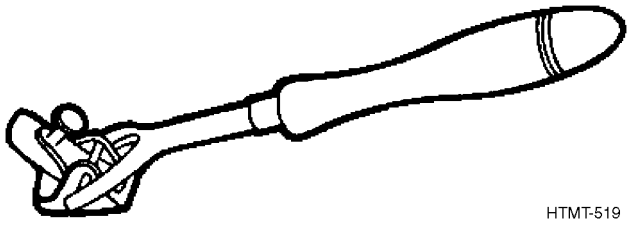

Box scrapers are most generally used to scrape stencil markings from wood surfaces. They are also used as wood floor scrapers. The box scraper has a 2-inch blade and a 9-inch handle hinged at the blade. The bottom of the scraper and the edge of the cutter are convex so that corners do not scratch up the work. The blade can be adjusted by loosening the thumbscrew and extending or withdrawing the blade in its holder.

30.2.4 Flat Blade Scraper.

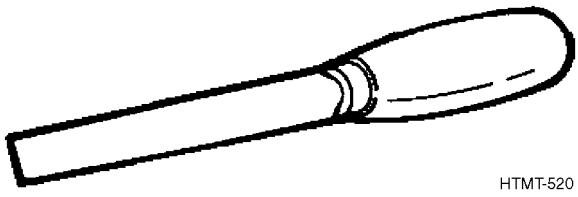

Flat blade scrapers are used for removing high spots from flat surfaces only.

30.2.5 Triangular Blade Scraper.

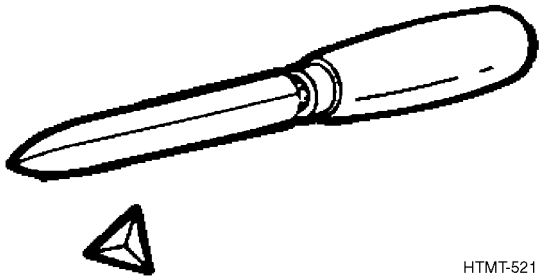

Triangular blade scrapers are used for removing high spots from flat or curved surfaces. They are available with either a 4 or 6-inch blade.

30.3 SAFETY.

1. Keep work, scraper, and hands free from grease and oil when using a scraper.

2. Keep scrapers sharp at all times, (except the carbon scrapers), since a dull scraper is more apt to slip and cause injury.

3. Use the scrapers only for their intended purposes.

NOTE

Carbon scraper blades are fairly dull to prevent scoring of a piston and/or cylinder wall.

30.4 USING A BEARING SCRAPER.

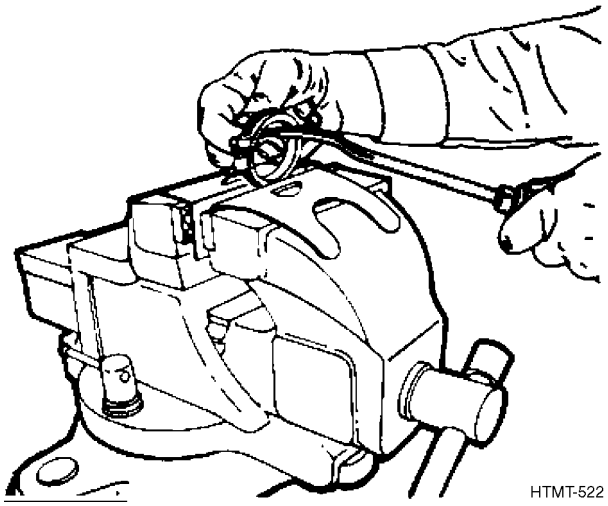

1. Place the bearing to be scraped on a bench or other suitable working surface.

2. Use both hands on the bearing scraper. One hand should be at the end of the handle while the other hand steadies the tool.

3. Use the hand at the end of the handle to twist the tool. Use very light pressure and remove a small amount of metal with the twisting stroke. If too much pressure is applied, the scraper will chatter and leave a rough, uneven surface.

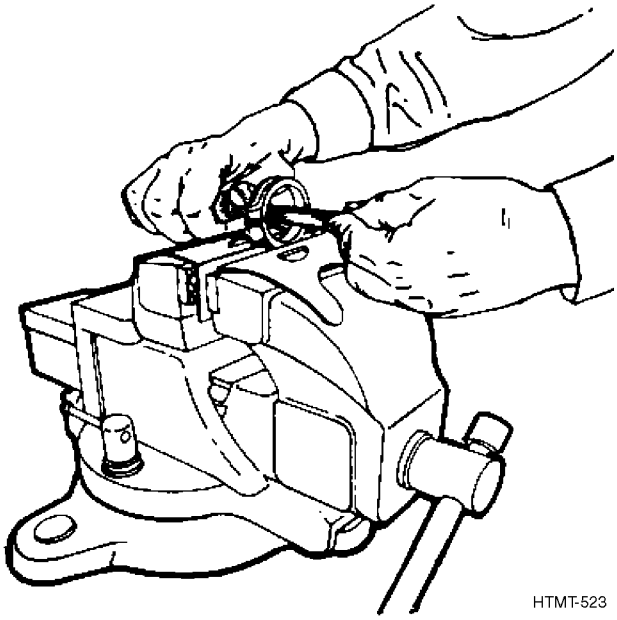

4. Start at one top side of bearing cap. Work down, and then up to the top of the other side. Do not scrape lengthwise.

5. Repeat procedure until the required amount of material has been removed to fit the bearing onto the shaft.

30.5 CARE OF SCRAPERS.

1. Keep scrapers sharp (except carbon scrapers) by sharpening or grinding.

NOTE

Carbon scraper blades are fairly dull to prevent scoring of a piston and/or cylinder wall.

2. When a scraper is not in use, coat the blade with a film of light oil.

3. Hang or store scrapers separately to protect the cutting edge. Do not throw scrapers in with other tools. This will damage the cutting edges.

4. For long-term storage, coat all metal parts with rust-preventive compound and store in a dry place.

CHAPTER 31
AWLS

31.1 HOW TO CHOOSE AND USE THEM.

Types and Uses, Paragraph 31.2, provides you with a list of some of the types of awls. These pages should help you select the right awl to do the job. Using a Scratch Awl, Paragraph 31.3, tells you how to use the awl to perform the desired function. Care of Awls, Paragraph 31.4, tells you how to care for the items.

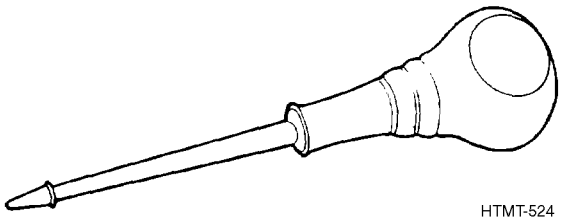

HTMT-524

31.2 TYPES AND USES.

31.2.1 Saddler's Awl.

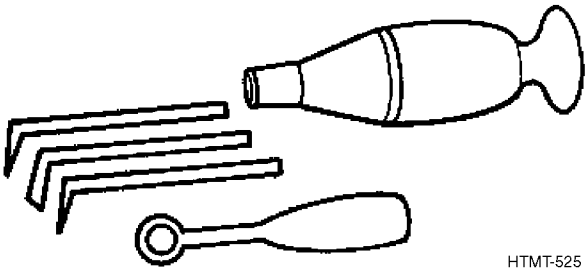

HTMT-525

The saddler's sewing and stitching awl has a round wooden handle and interchangeable blades. The awl is used to punch holes in leather and as an aid during sewing. Cover points when not in use.

31.2.2 Scratch Awl.

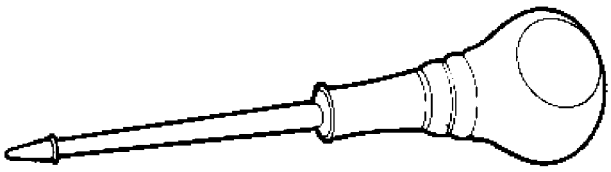

HTMT-526

The scratch awl has a fixed tapered blade and a wooden handle. It is used to scribe marks or as a center punch on soft wood and plastics. Cover points when not in use.

31.3 USING A SCRATCH AWL.

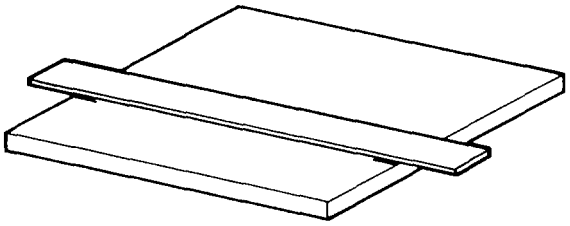

HTMT-527

1. Place material to be scribed on a flat surface. Place a ruler or straight edge on guide marks. You will already have measured and marked where you want to scribe.

WARNING

Awls are very sharp and must be used with extreme caution.

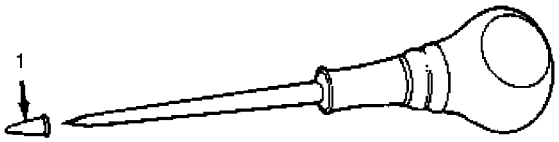

HTMT-528

2. Remove the protective cover (1).

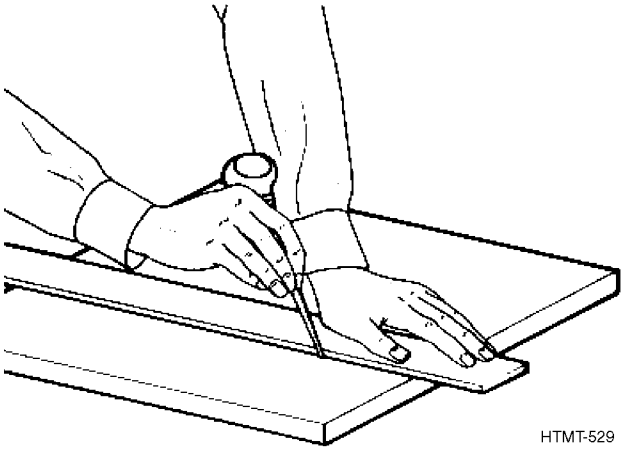

HTMT-529

3. Hold straight edge firmly. Hold the awl like a pencil and scribe a line along the straight edge.

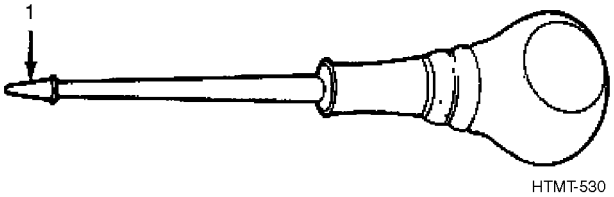

4. Replace protective cover (1).

31.4. CARE OF AWLS.

1. Keep points covered when not in use and stow awls in racks or in tool boxes. (Optional if tool is secured with foam inlay).

2. Lightly oil metal parts before storing.

CHAPTER 32
BOLT AND CABLE CUTTERS

32.1 HOW TO CHOOSE AND USE THEM.

Types and Uses, Paragraph 32.2, provides you with a list of some of the types of cutters. These pages should help, you select the right cutter to do the job. Using Center Cut Cutters, Paragraph 32.4, tells you how to use the cutter to perform the desired function. Care of Bolt and Cable Cutters, Paragraph 32.5, tells you how to care for the item.

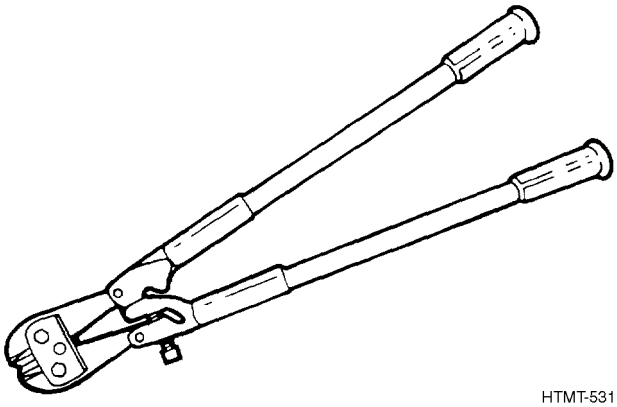

HTMT-531

32.2 TYPE AND USES.

WARNING

Bolt cutters are considered security items. Always secure these tools when not in use.

Bolt and cable cutters come with a variety of cutting edges which are designed for specific applications. They are shaped like giant shears with short blades and long handles. The handles are hinged at one end. The cutters are at the end of extensions, which are jointed in such a way that the inside joint is forced outwards when the handles are closed. This forces the cutting edges together with great force. Bolt cutters are made in lengths from 18 to 36 inches. The larger ones will cut mild steel bolts and rods up to 1/2-inch diameter.

32.2.1 Center Cut Cutter.

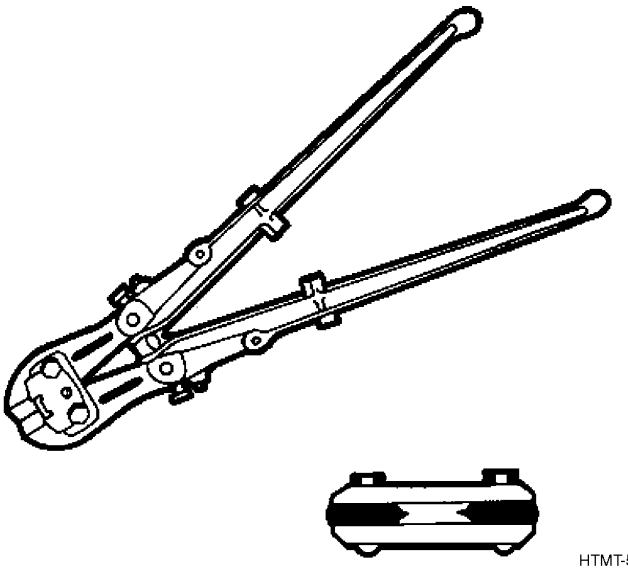

HTMT-532

The center cut cutter is used for all general-purpose cutting. The cutting jaws are firmly fixed in line with the handles. The cutting edges are in the center of the jaw between equal levels. The longer the handle, the greater the cutting capacity. The cutting capacities range from 3/16 inch to 1/2 inch for medium steel, and from 5/16 inch to 11/16 inch for soft steel. The handles range from 14-inch to 42-inch lengths.

32.2.2 Clipper Cut Cutter.

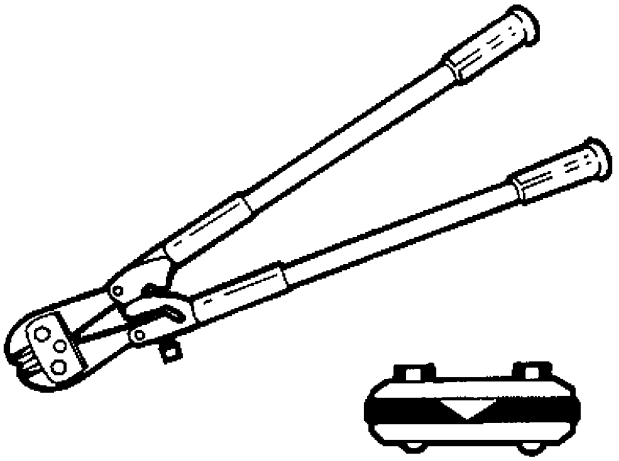

HTMT-533

The cutting edges of the clipper cut cutter are in line with the handles and beveled almost entirely from one side. These cutters allow very close cutting of projecting ends. The cutting capacities range from 1/4 inch to 9/16 inch for medium steel,

and from 5/16 inch to 11/16 inch for soft steel. The handles range from 14-inch to 42-inch lengths.

32.2.3 Shear Cut, Flat Bar, and Strip Cutter.

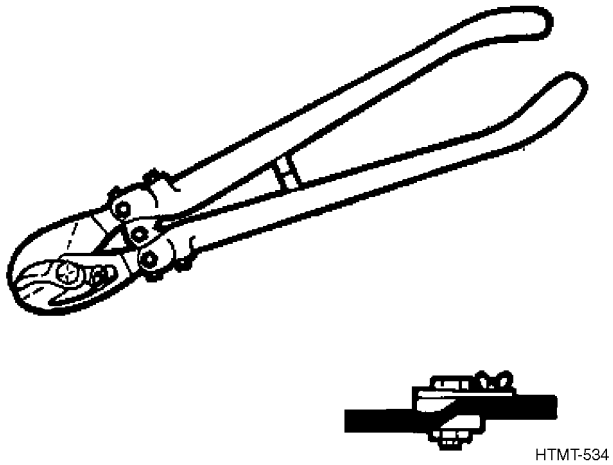

Shear cut, flat bar, and strip cutters are used to cut flat-soft, medium-hard bar, and strip stock. The cutting edges of the jaws pass each other in the manner of scissors, making a complete shear cut.

The cutting capacities range from 7/8 x 5/32 inch to 1-1/2 x 9/32 inch for soft and medium steel, and from 3/4 x 1/8 to 1-7/16 x 1/4 inch for hard steel. The handles range from 14-inch to 36-inch lengths.

32.2.4 Side Nut Splitter Cutter.

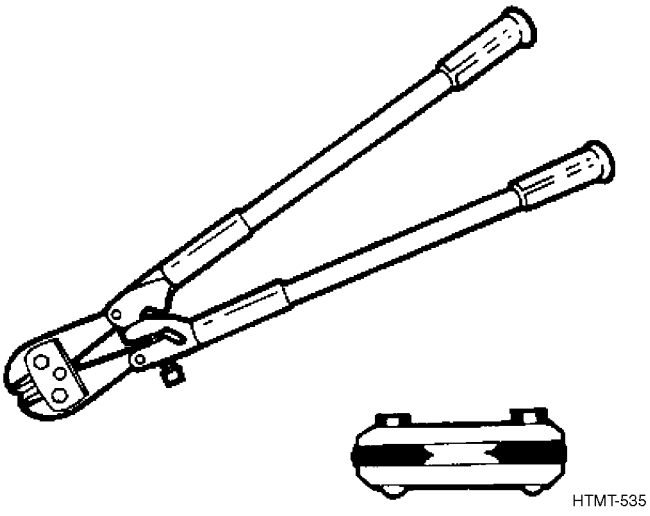

The side nut splitter cutter has the edge of the cutting jaws in line with the handles. When adjusted properly, the cutting edges will remain separated after the nut is split. This tool is used to split nuts off bolts, with the tool “head on” to the bolt, without damaging the bolt. Cutting capacity is rated for a 3/8-inch bolt nut and is adjustable to 5/16-inch and 1/4-inch capacity. The handle is 24 inches long.

32.2.5 Angular Cut Cutter.

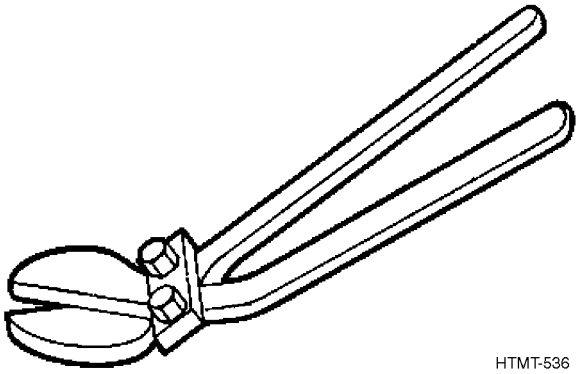

Angular cut cutters have the cutting edges offset 30 degrees from the handles. This is so the user can keep the work in sight. It is used for close cutting of soft or medium-hard metals. Cutting capacities range from 1/4 inch to 1/2 inch for medium steel. The handles range from 14 inches to 36 inches in length.

32.2.6 Shear Cut Cable Cutter.

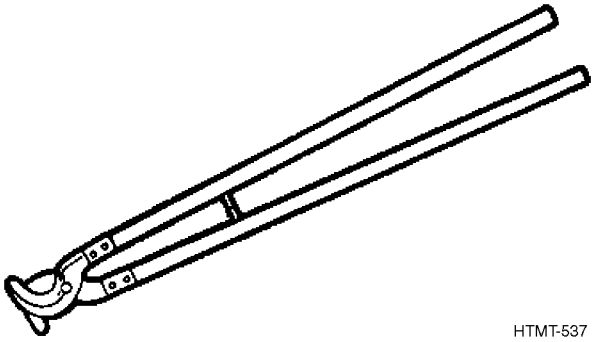

Shear cut cable cutters have curved interposing cutters. They are used to cut lead and rubber-covered cable, and communication cable. Cutting capacities for lead and rubber-covered cable is 1-3/8 inches for the 25-1/2-inch handle, and 2-1/4 inches for the 37-inch handle. The communication cable cutting capacity for the 25-1/2-inch handle is 500,000 circular mils, and 750,000 circular mils for the 37-inch handle.

32.3 SAFETY.

1. Wear safety glasses when cutting.

2. When using bolt cutters, make sure your fingers are clear of the jaws and hinges.

3. Take care that the bolt head or piece of rod cut off does not fly and injure you or someone else. When the cutters are brought together rapidly, sometimes a bolt-head or piece of rod being cut off will fly some distance. The harder the material, the more it will fly.

4. If it is necessary to cut electrical cable or wire which is already installed, be sure that the power is disconnected before using the cable cutter on it.

5. Bolt cutters are fairly heavy, so make sure that they are stored in a safe place where they will not fail and injure someone.

32.4 USING CENTER CUT CUTTERS.

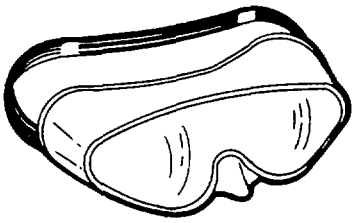

WARNING

- When using bolt cutters, make sure your fingers are clear of the jaws and hinges.
- Wear eye protection.

CAUTION

Never attempt to cut spring wire or other tempered metal with bolt cutters. This will cause the jaws to be sprung or nicked.

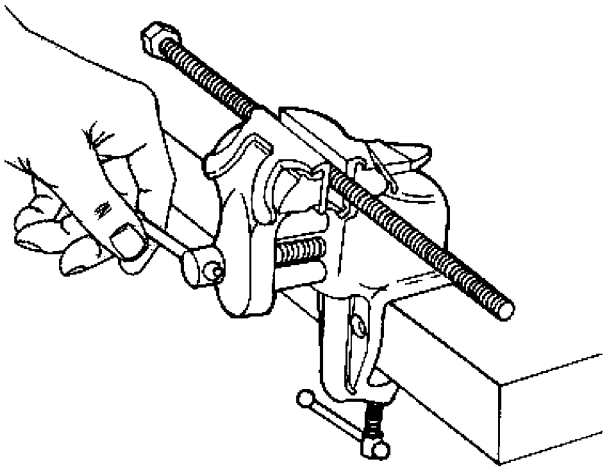

HTMT-538

1. Clamp or steady the work if unattached before cutting, to prevent the cutters from slipping.

2. Dry hands and handles of cutter before using to prevent slipping.

3. Position the work as far back as possible into the jaws, to prevent damage to the jaws as well as to reduce the pressure required for cutting.

CAUTION

Use extreme care when using cutter to avoid catching any part of the body or clothes between handles as pressure is applied to them.

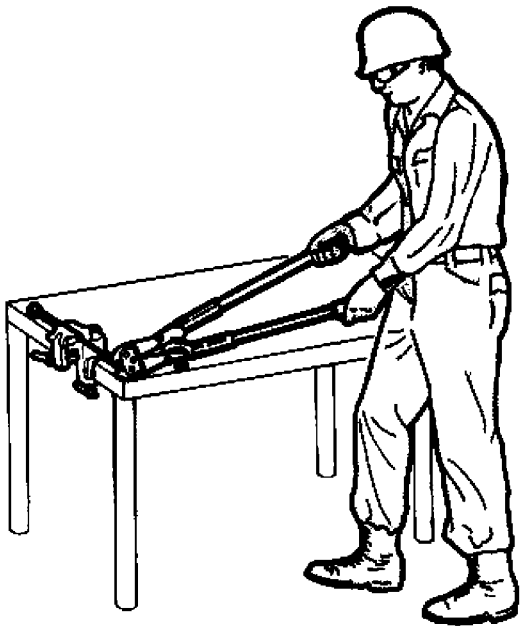

HTMT-539

4. Stand at a right angle to the work being cut and apply steady pressure to the handles until the work has been cut off. Do not pry or twist with the handles while cutting.

32.5 CARE OF BOLT AND CABLE CUTTERS.

1. Replace worn cutters when necessary.

2. Keep moving parts well oiled.

3. Keep the adjusting screws just tight enough to ensure that the cutting edges meet along their entire length when the jaws are closed.

4. Keep cutter jaws at right angles to the piece being cut. Do not twist or pry with the tool while cutting.

5. Do not sharpen edges too sharp. Leave edge approximately 1/64-inch wide for longer jaw life.

6. Before storing, wipe dirt and grease from the cutter and coat the metal parts lightly with oil to prevent rust.

7. Store the cutter in a special compartment of the tool box or on a shelf where it cannot fall.

CHAPTER 33
GLASS CUTTERS

33.1 HOW TO CHOOSE AND USE THEM.

Types and Uses, Paragraph 33.2, provides you with a list of some of the types of cutters. These pages should help you select the right cutter to do the job. Using a Wheel-Type Glass Cutter, Paragraph 33.3, tells you how to use the cutter to perform the desired function. Care of Cutters, Paragraph 33.4, tells you how to care for the items.

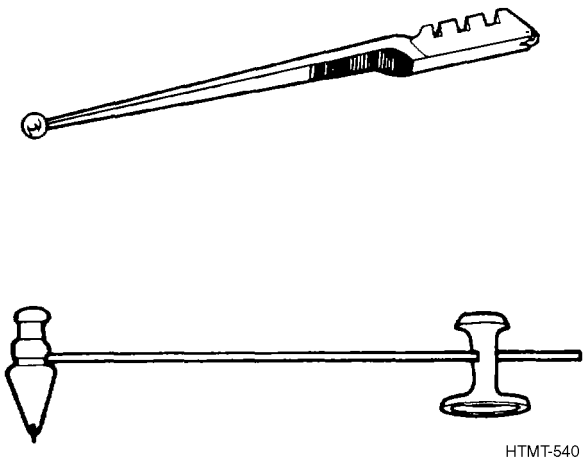

HTMT-540

33.2 TYPES AND USES.

33.2.1 Wheel Type Glass Cutter.

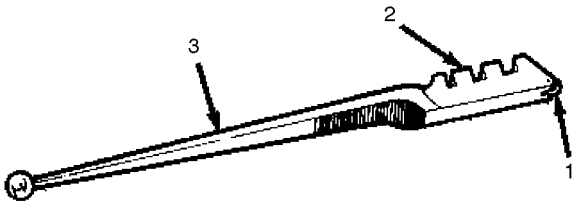

HTMT-541

The wheel glass cutter consists of a steel cutting wheel (1), notching teeth (2), and a holder (3). It is used for making straight cuts on glass.

33.2.2 Circle Glass Cutter.

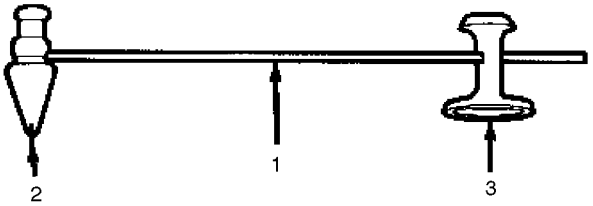

HTMT-542

The circle glass cutter has an adjustable arm (1), a cutting head (2), and a suction cup clamp assembly (3). The cutting head scores a mark on the sheet of glass. The suction cup assembly provides an anchor. The circle glass cutter is used to cut circles in glass. The adjustable arm can be moved in the suction cup assembly to allow circles from 2 to 24 inches in diameter.

33.3 USING A WHEEL-TYPE GLASS CUTTER.

WARNING

Use care when handling glass. Wear gloves to protect your hands.

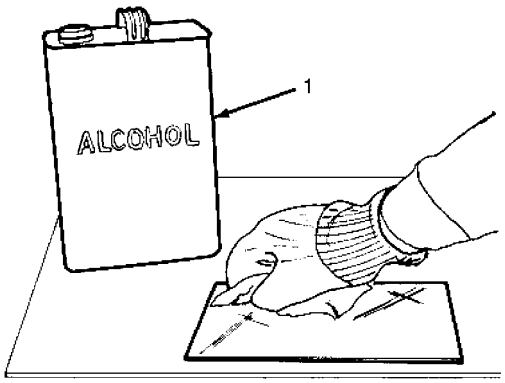

HTMT-543

1. Place padding (newspapers, a piece of carpet, or blanket) on a flat, level surface.

2. Make sure the glass is clean. Apply alcohol (1) along the line to be cut. This prevents the cutting wheel from becoming gummed up while in use.

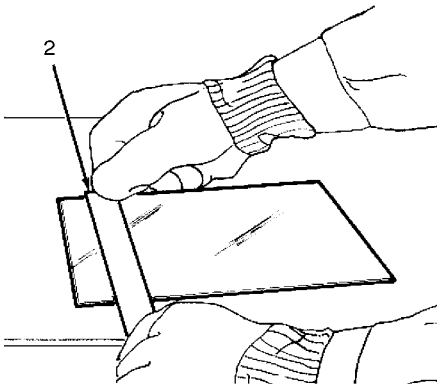

HTMT-544

3. Place a straight edge (2) along line to be cut. A wooden yardstick should be used when available, since wood will not slip easily on glass. The cutter will cut 1/16 inch from your mark, so adjust your guide before cutting.

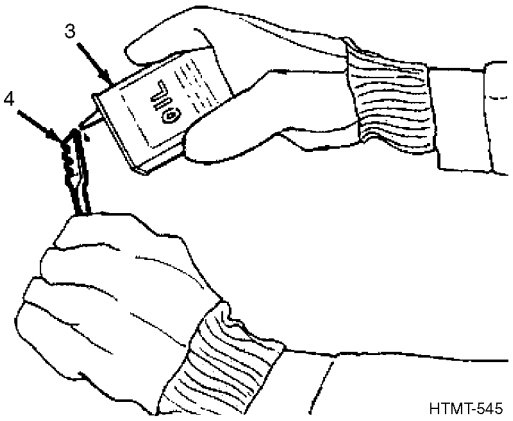

HTMT-545

4. Apply a drop of light machine oil (3) to the cutting blade (4).

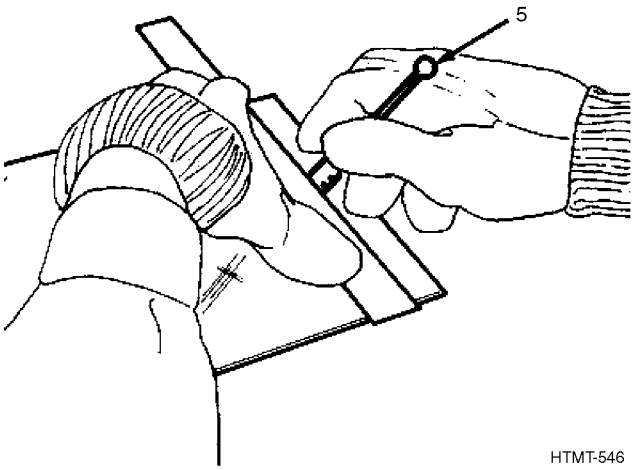

HTMT-546

5. Hold down on the straight edge with one hand while holding the cutter (5) in an upright position in the other hand. Your forefinger should extend along the holder with your fingertip near the wheel.

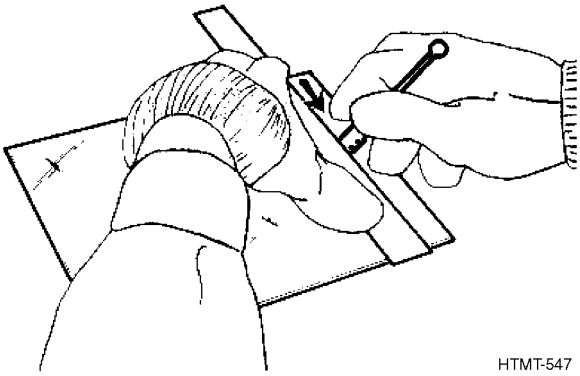

HTMT-547

6. Start your cut at the far end of the pane of glass drawing the cutter toward you. It is important that you maintain proper pressure throughout the cut. Correct pressure is indicated by a scratching sound. Too much pressure or a dull wheel will produce a crunching sound. Make a continuous mark from one edge to the other edge.

NOTE

Draw the cutter over the line only one time. If it is necessary to recut a groove, do not use a new cutter.

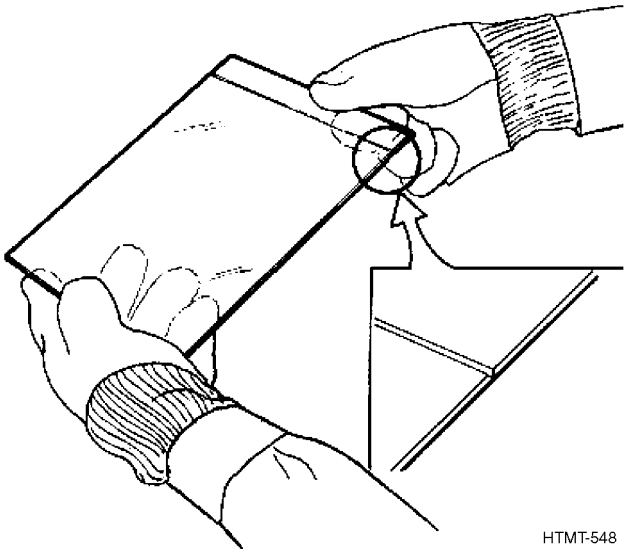

HTMT-548

7. A proper cut is indicated by a slight crack in the surface. It is best seen from the side opposite the mark.

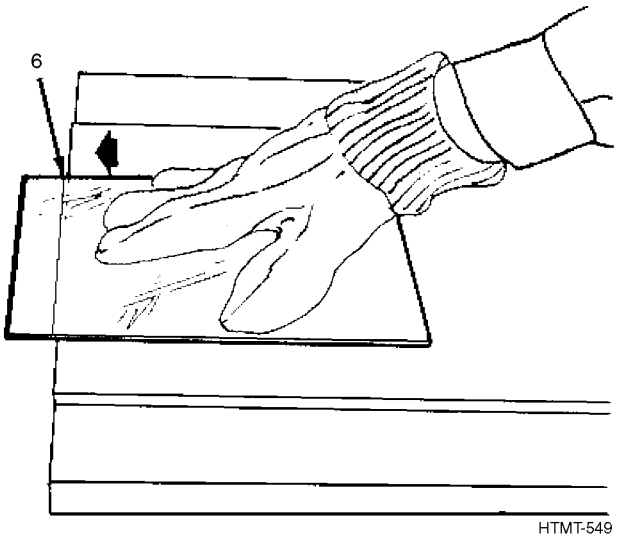

8. To part the glass, slide the pane of glass so the scored groove (6) is about 1/8 inch beyond the table edge.

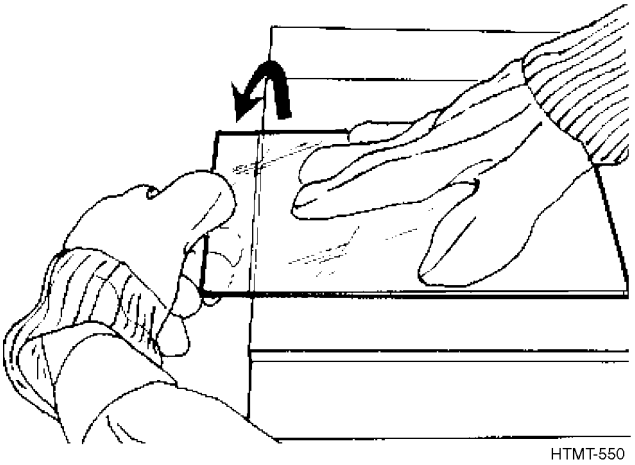

9. Hold down on the section resting on the working surface. Grasp the section extending over the edge with your other hand. Apply a light downward pressure to part the glass.

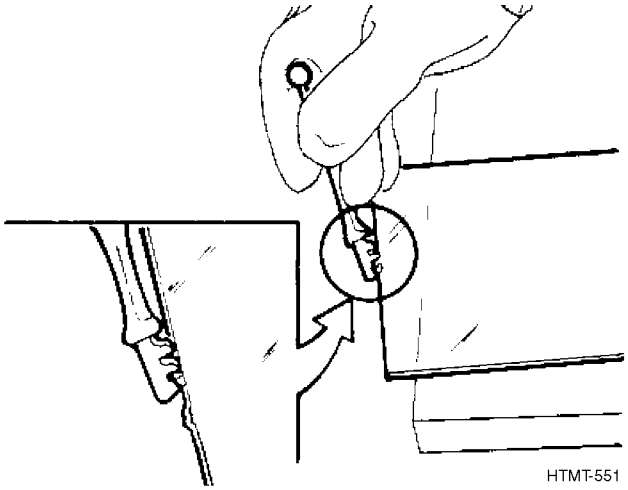

10. Remaining chips may be removed by applying a downward twisting motion using the notches of the cutter.

33.4 CARE OF CUTTERS.

1. Make sure cutting blades remain sharp. Sharpen dull blades with a file or oil stone.

2. When not in use, apply a light film of oil on the cutting edges.

3. Store cutters in such a way as to prevent the blades accidentally making contact with personnel of other metal.

4. For long periods of storage, coat entire cutter with rust-preventive compound and store in a dry place.

CHAPTER 34
KNIVES

34.1 HOW TO CHOOSE AND USE THEM.

Types and Uses, Paragraph 34.2, provides you with a list of some of the types of knives. These pages should help you select the right knife to do the job. Using a Putty Knife, Paragraph 34.4, tells you how to use the knife to perform the desired function. Care of Knives, Paragraph 34.5, tells you how to care for the items.

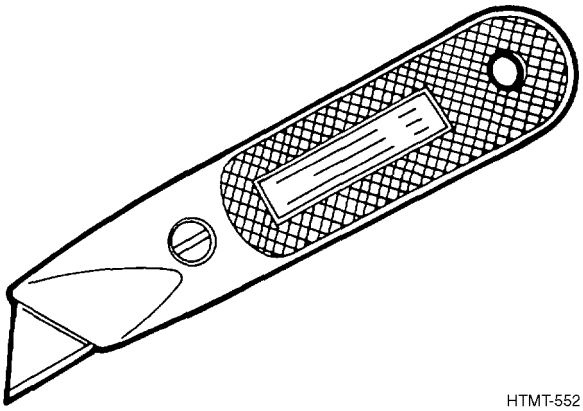

HTMT-552

34.2 TYPES AND USES.

Most knives have cutting edges and are used to cut, pare, notch, and trim wood, leather, rubber, and other materials. However, putty knives are used to apply and spread putty when installing glass.

34.2.1 Rubber Cutting Knives.

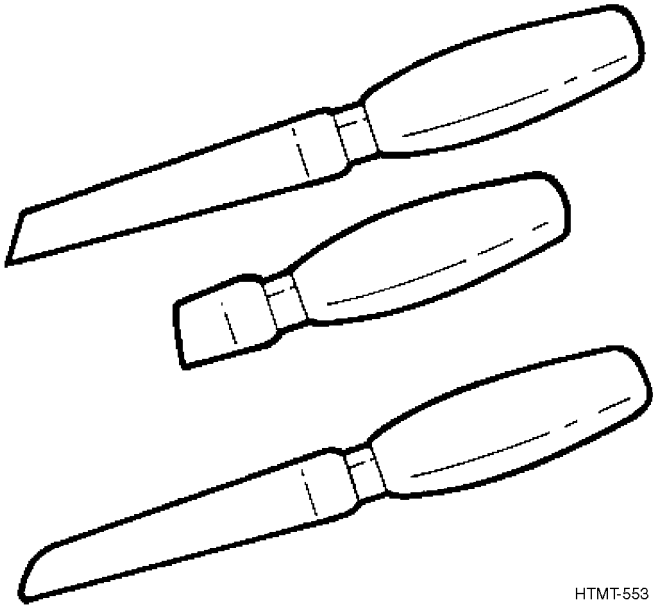

HTMT-553

Rubber cutting knives come in a variety of styles and shapes. Some taper to a blunt round point. Some have a short, wide blade. Others have a long, wide hollow ground blade. The handle is usually oval in shape.

34.2.2 Saddler's Knives.

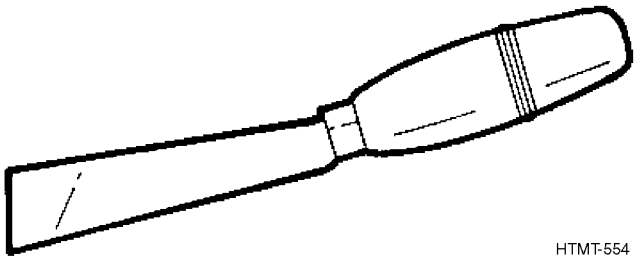

HTMT-554

Saddler's knives are used on leather and come in different shapes. One has a broad point on a 1-1/8-inch by 5-inch blade. One has a 5/8-inch by 3-7/8-inch square point blade. Another has a 5-inch rounded-end blade. Shoe knives are similar to saddler's knives, but usually they have a 3/4-inch by 3-1/4-inch blade.

34.2.3 Shop Knife.

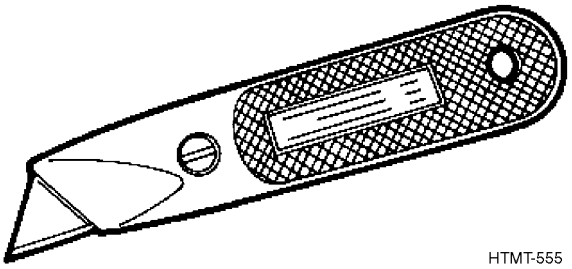

HTMT-555

The shop knife is used to cut wallboard, paper, cardboard, linoleum, canvas, and upholstery materials. Most shop knives have an aluminum handle and have storage space for five interchangeable blades in the 5-inch handle.

34.2.4 Pocket Knife.

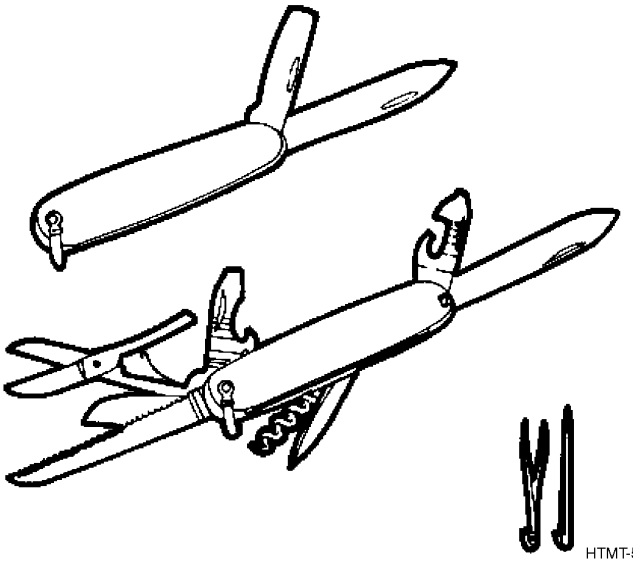

HTMT-556

Pocket knives are used for light cutting, sharpening pencils, cutting string, and whittling. They are not suitable for heavy work. There are many styles and shapes. Some are multipurpose and have an assortment of blades which are used for forcing holes, driving screws, and opening cans, as well as cutting. The blades are hinged and contained within the case when not in use and are spring loaded to keep them firmly in place when open or closed.

34.2.5 Draw Knife.

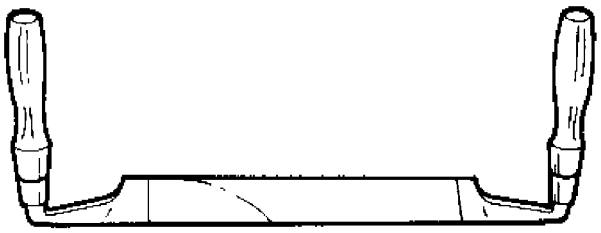

HTMT-557

A draw knife is a flat-edged tool used especially on round timber to rough-shape wood. It is used to smooth wood after chopping with a hatchet or axe. It consists of a single bevel blade and two round wooden handles, one at each end and at right angles to the blade. The handles may be adjustable or rigid.

34.2.6 Putty Knife.

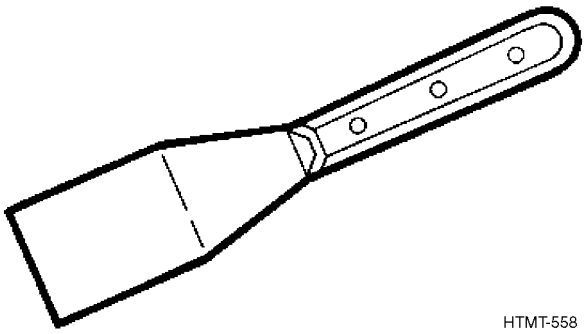

HTMT-558

A putty knife is used for applying putty to window sashes in setting panes of glass. The blade has a wide square point and is available in different lengths and widths.

34.3 SAFETY.

1. Do not use knives which are larger than can be handled safely to cut work.

2. Use knives only for the purpose for which they were designed.

3. Do not carry open knives in your pocket.

4. Do not leave knives in such a position that they will cause injury to others.

5. Carefully put knives in a sheath or container after use to protect the sharp cutting edges from contacting other hard objects.

6. Always cut away from the body, except when using the draw knife.

34.4 USING A PUTTY KNIFE.

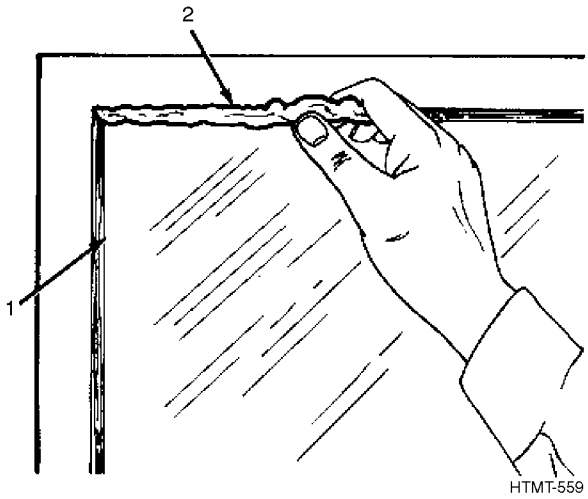

1. Before applying new putty, make sure that the frame (1) is clean and all the old putty has been removed.

2. Roll new putty (2) into a rope and press it into the frame with your fingers.

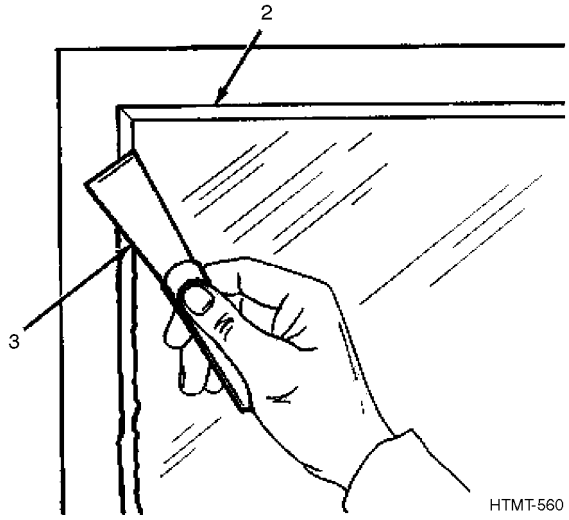

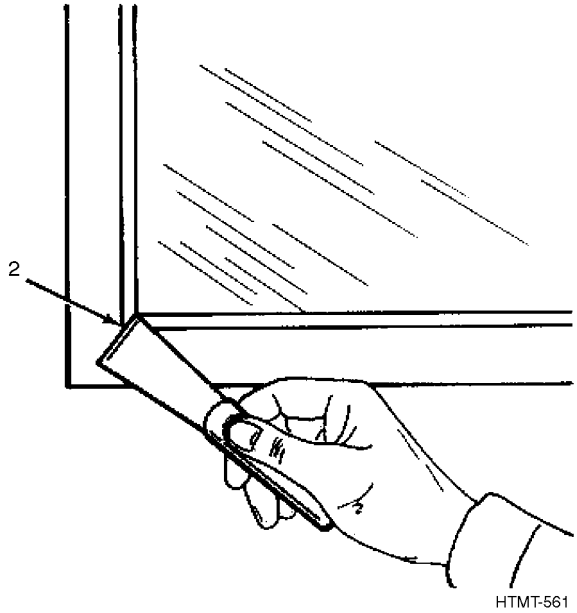

NOTE

Occasionally dip the putty knife in water to aid in shaping the putty.

3. With the putty knife (3), shape the putty (2) into an angle sloping from the glass down to the edge of the frame.

4. Miter the putty (2) at the corners as shown.

34.5 CARE OF KNIVES.

1. Carefully put knives away after use.

2. Protect the sharp cutting edges from contact with other hard objects.

3. Use knives only for the purpose for which they are intended.

4. Before storing, wipe all metal parts with an oily rag.

5. For long-term storage, apply a thin film of rust-preventive compound on all metal parts and store in a dry place.

CHAPTER 35
PIPE CUTTING AND THREADING TOOLS

35.1 HOW TO CHOOSE AND USE THEM.

Types and Uses, Paragraph 35.2, provides you with a description of the pipe cutter and threading set. These pages should help you select the right cutting die to do the job. Using, Paragraph 35.3, tells you how to use the pipe cutter and threading set to perform the desired function. Care of Pipe Cutters and Threading Sets, Paragraph 35.5, tells you how to care for the items.

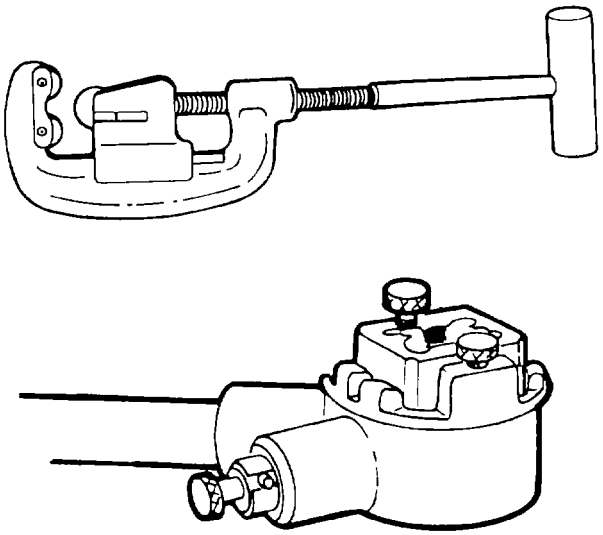

HTMT-562

35.2 TYPES AND USES.

35.2.1 Pipe Cutters.

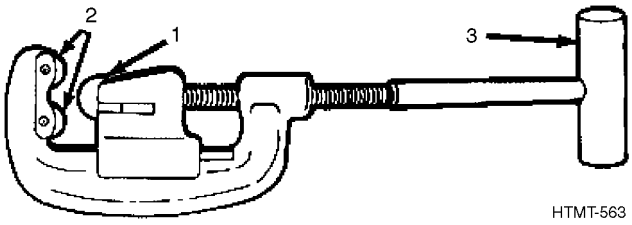

HTMT-563

There are two sizes of pipe cutters. One size can cut from 1/8 to 2 inches, while the other can cut from 2 to 4 inches. The pipe cutter has a cutting blade (1) and two pressure rollers (2) which are adjusted and tightened by turning the handle (3). Pipe cutters are used to cut steel, brass, copper, wrought iron, and lead pipe.

35.2.2 Pipe Threading Set.

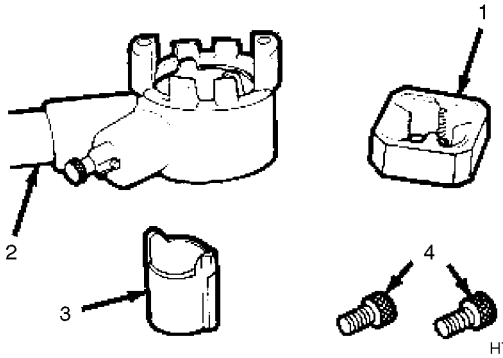

HTMT-564

The pipe threading set contains an assortment of cutting dies (1), a handle or wrench (2), a collar (3) and locking screws (4). The cutting dies may range from 1/8-inch to 2 inches in diameter. The threading set is used to cut American Standard Pipe threads on steel, brass, copper, wrought iron, and lead pipe.

35.3 USING A PIPE CUTTER.

WARNING

Pipe often comes with a protective cap (1). Leave the cap on. It keeps you from getting cut on the sharp pipe ends.

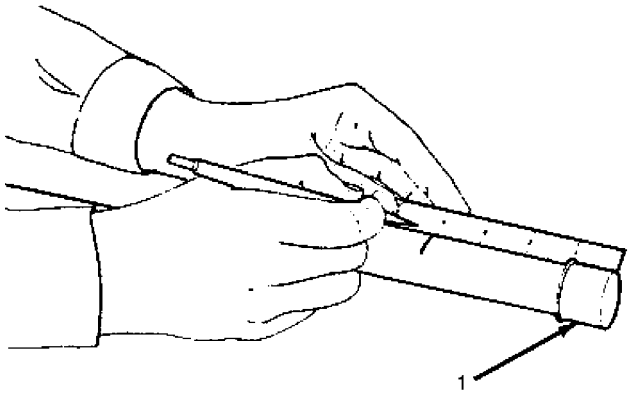

HTMT-565

1. Measure from end of pipe and make a mark where you want to cut.

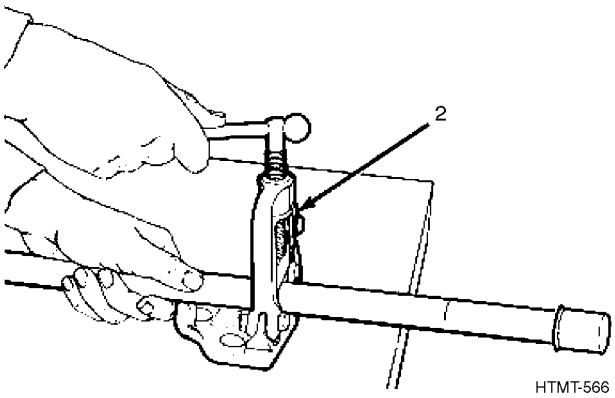

2. Fasten pipe securely in a pipe vise (2). Be sure mark is clear so that it can be cut. Pipe must be supported on both ends to keep it from bending.

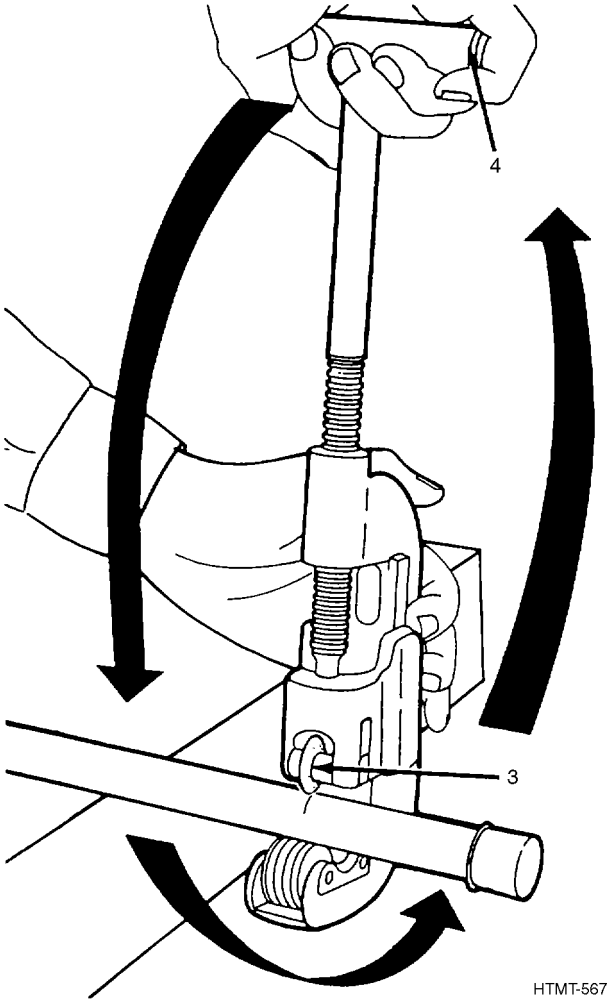

3. Open the jaws of the pipe cutter enough to allow the pipe cutter to be placed around the pipe. Adjust so that the cutting blade (3) is on the line.

4. Tighten the handle (4) until cutting blade makes contact with pipe.

5. Then turn the handle (4) 1/4 of a turn more clockwise.

6. Now turn the whole cutter one turn around the pipe (counterclockwise).

7. Repeat steps 5 and 6 until the pipe is cut through.

NOTE

Be sure the cutter is at a right angle to the pipe as shown to keep the wheel on track.

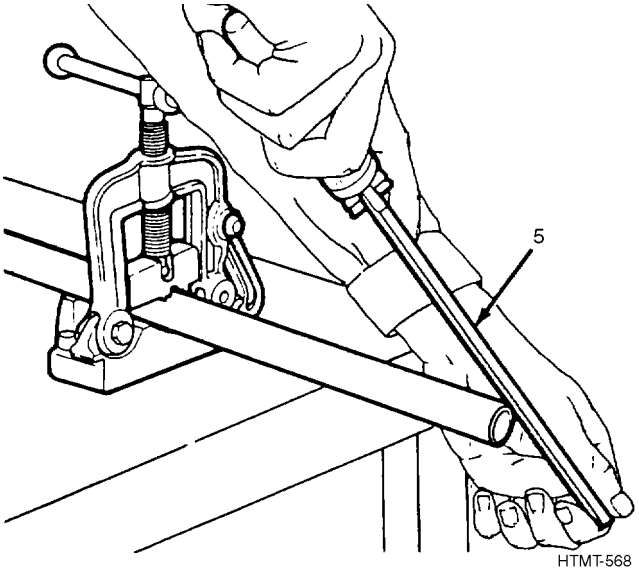

8. Remove the shoulder (the rough edge left by cutting) from the outside of the pipe with a file (5).

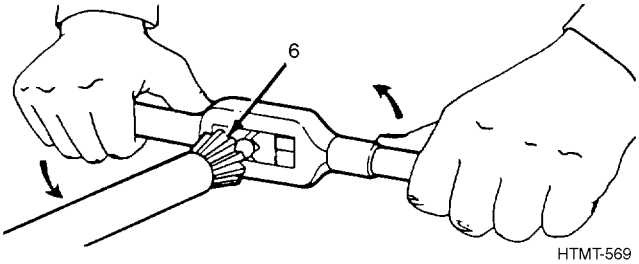

9. Remove the burr from the inside of the pipe with a pipe reamer (6). (See Chapter 39 for care and use of pipe reamers.)

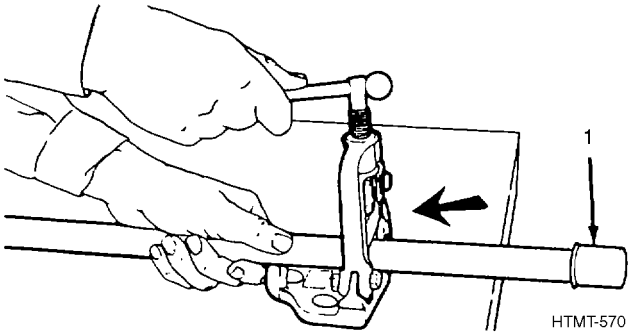

10. Place protective cap (1) on cut pipe end and remove from vise.

NOTE

If the part of the pipe you cut off is going to be used, put in vise and repeat steps 8 and 9. If you are going to store the pipe, put the protective cover back on.

35.4 USING A PIPE THREADING SET.

WARNING

Pipe ends are extremely sharp. Use care when handling.

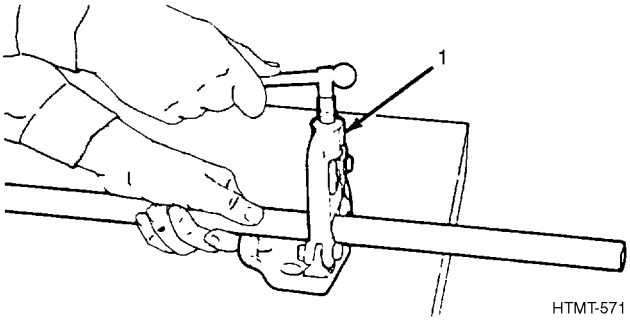

1. Clamp pipe securely in pipe vise (1) with end to be threaded extending beyond the edge of the vise jaws as shown.

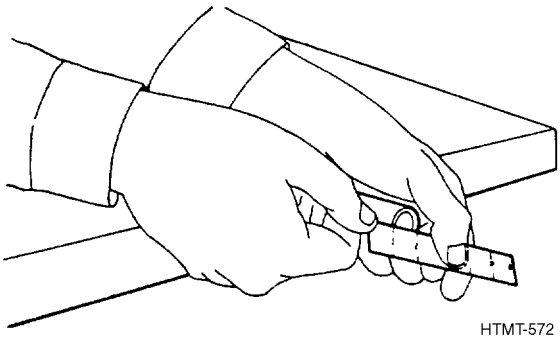

2. Measure outside pipe diameter to determine the proper die.

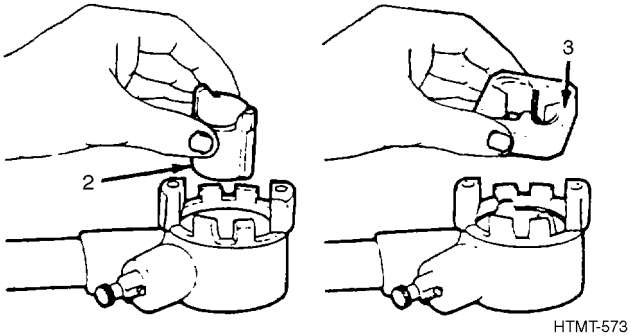

3. Inspect the die for nicks, and be sure that it is sharp.

Assemble die on ratchet die stock as shown in steps 4, 5, and 6.

4. Insert collar (2).

5. Insert cutting die (3) over top of collar (2).

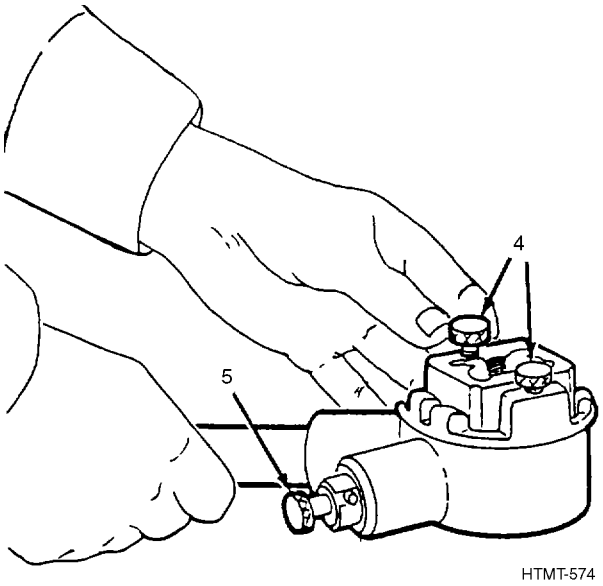

6. Secure in place with locking screws (4).

7. Set ratchet to turn in a counterclockwise direction by pulling out ratchet control knob (5) and turning it 180 degrees. The ratchet permits cutting threads on pipes where it is not possible to turn the handle 360 degrees. It is set for clockwise or counterclockwise rotation by pulling out and turning the ratchet control knob (5) from one detent to the other.

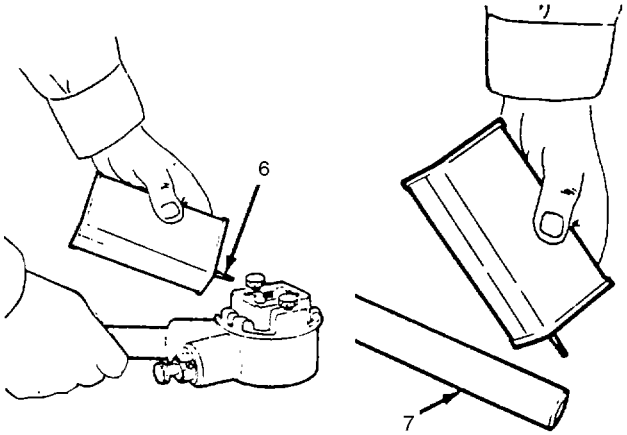

HTMT-575

8. Apply cutting oil (6) to die and to end of pipe (7) to prevent overheating of dies and damaging of threaded surface.

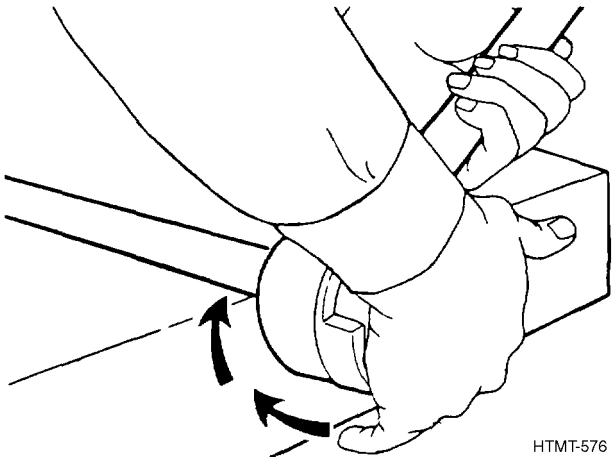

HTMT-576

9. Slide cutting die over end of pipe to be threaded and apply light pressure with the heel of your hand.

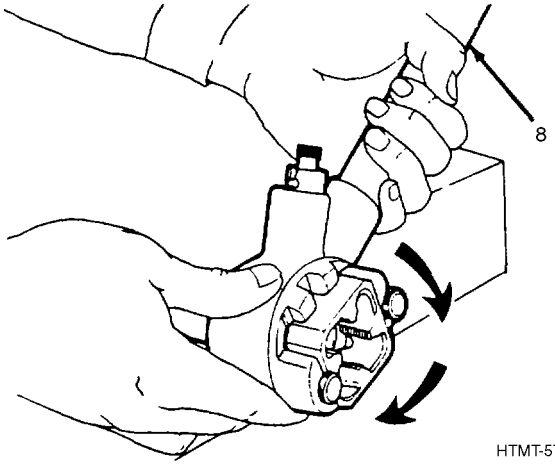

HTMT-577

10. Start die with short strokes of the ratchet handle (8). Be sure the die is going on the pipe squarely.

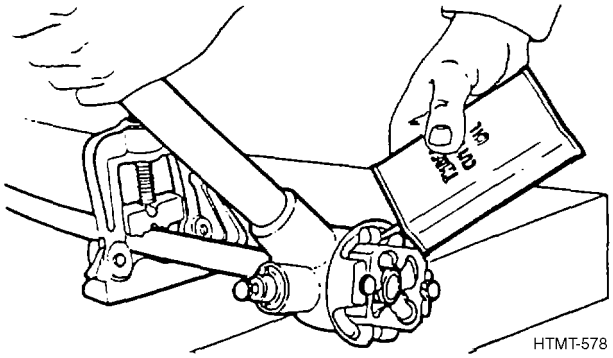

HTMT-578

11. After a full turn of the die, apply another coat of cutting oil.

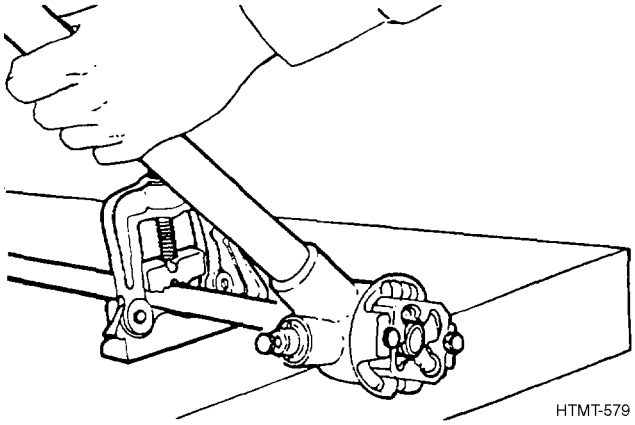

HTMT-579

12. After two more turns on the die, back off one turn and apply a coat of cutting oil.

NOTE

If metal shavings become clogged in the die, remove the die and clean it with a piece of cloth.

13. Keep repeating step 11 until desired thread length is obtained.

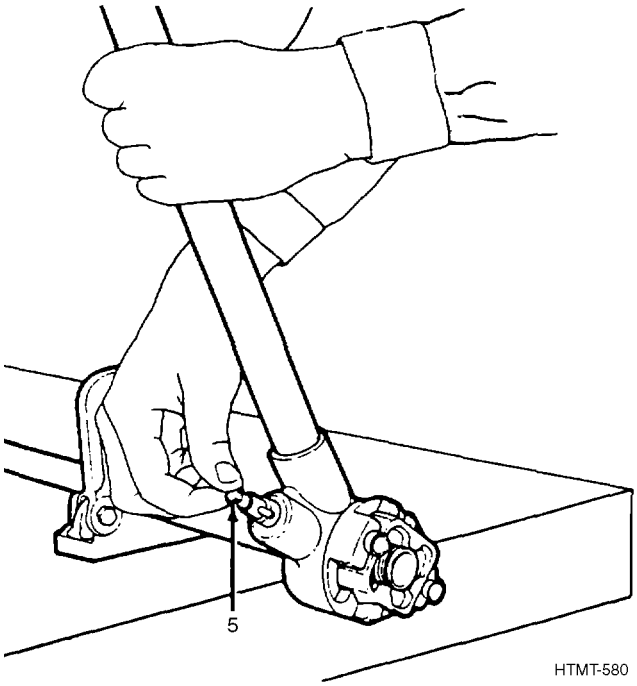

14. Reverse ratchet by pulling ratchet control knob (5) from detent and turning it 180 degrees. Then back up the cutting die.

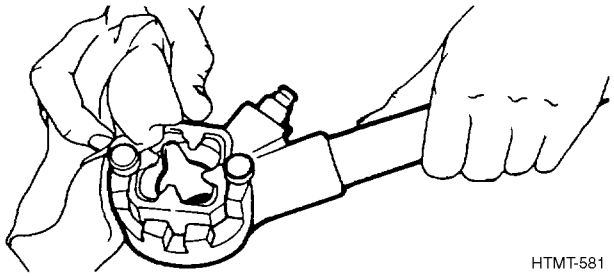

15. Wipe excess oil and metal shavings from die and ratchet handle.

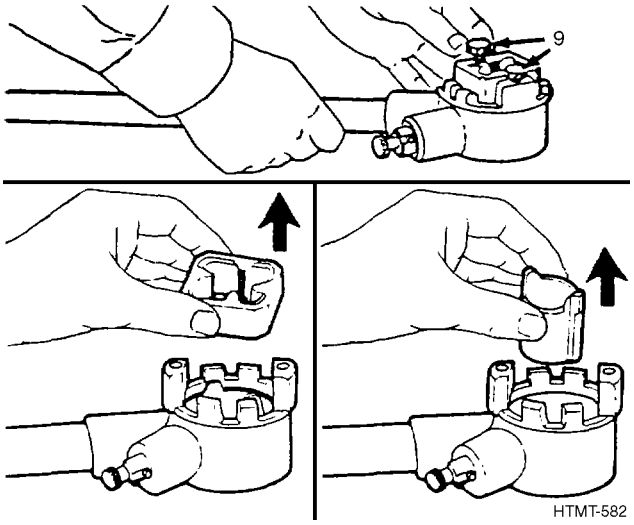

16. Disassemble the die from the ratchet handle as shown, by removing locking screws (9). Remove die and collar from ratchet head.

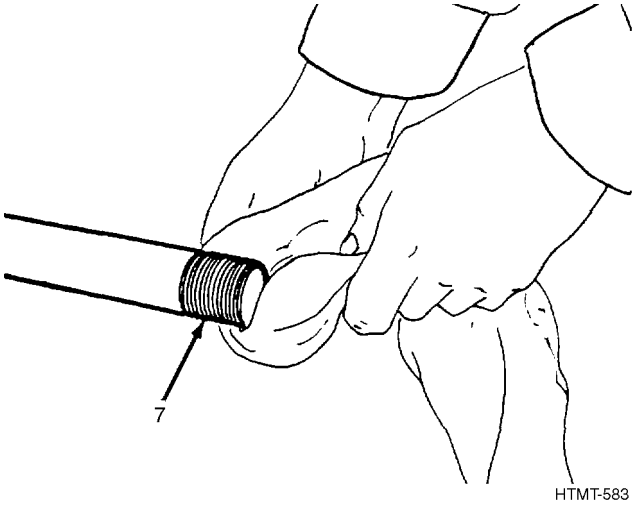

17. Wipe excess oil and shavings from threaded end of pipe (7).

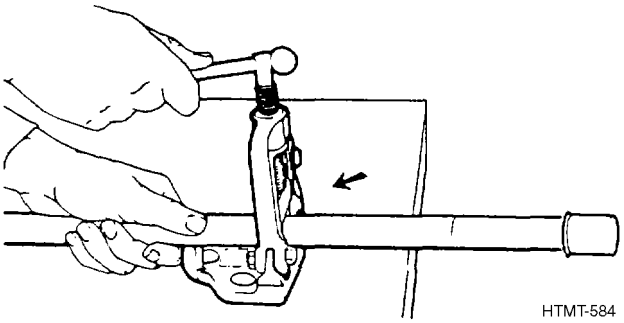

18. Place cap, if available, over threads and remove the pipe from the vise.

35.5 CARE OF PIPE CUTTERS AND THREADING SETS.

35.5.1 Pipe Cutters.

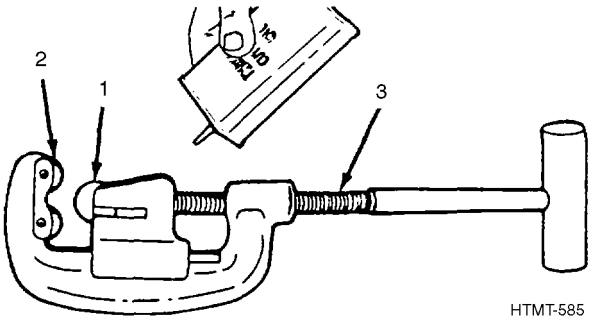

1. Clean and lightly oil the cutter wheel (1), roller guide (2), and adjusting screw (3).

2. Store on a rack or in a box which protects the cutting wheel.

35.5.2 Threading Sets.

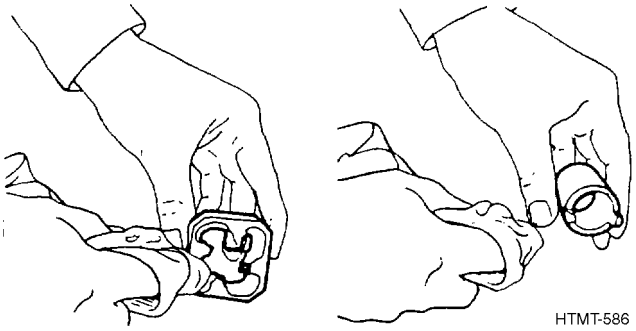

1. Wipe off excess cutting oil and clean metal shavings from the cutting die edges and collar.

2. Store in a case or box which will protect the cutting dies.

CHAPTER 36
TUBE CUTTING AND FLARING TOOLS

36.1 HOW TO CHOOSE AND USE THEM.

Types and Uses, Paragraph 36.2, provides you with a description of the tube cutting and flaring tool. These pages should help you select the right flaring combination to do the job. Using a Flaring Tool, Paragraph 36.3, tells you how to use the tube cutting and flaring tools to perform the desired function. Care of Tube Cutters and Flaring Tools, Paragraph 36.4, tells you how to care for the items.

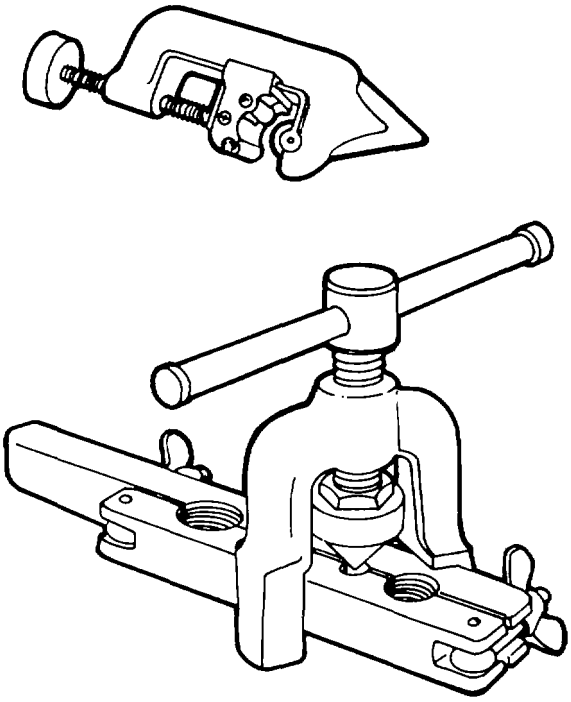

HTMT-587

36.2 TYPES AND USES.

36.2.1 Tube Cutters.

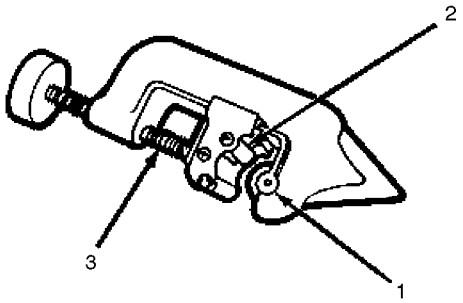

HTMT-588

Tube cutters have a cutting blade (1), guide rollers (2), and an adjusting screw (3). Some cutters have a reaming blade attached to the frame of the cutter. Tube cutters can cut from 1/8 inch through 2-5/8 inches tubing. They can cut copper, aluminum, or brass tubing.

36.2.2 Flaring Tool.

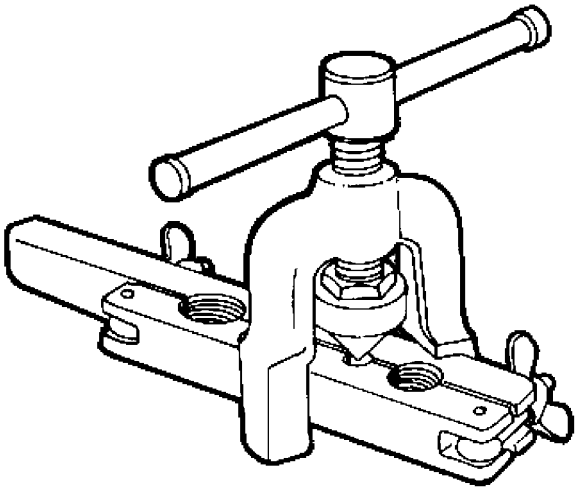

HTMT-589

Flaring tools are of two basic types, single and double. They are used to put flares in soft tubing. The single flaring tool consists of a split die block, a locking clamp with compressor screw and a cone which forms a 45 degree flare on the end of the tube. The screw has a T-handle. The die block is constructed to be used on the following outside diameter tubing: 1/8, 3/16, 1/4, 5/16, 3/8, 7/16, 1/2, 5/8, and 3/4 inch.

The double flaring tool consists of a split die block, a locking clamp with compressor screw, adapters for turning tube edge, and a cone which forms a 45 degree flare on the end of the tube. The screw has a T-handle.

36.3 USING A FLARING TOOL.

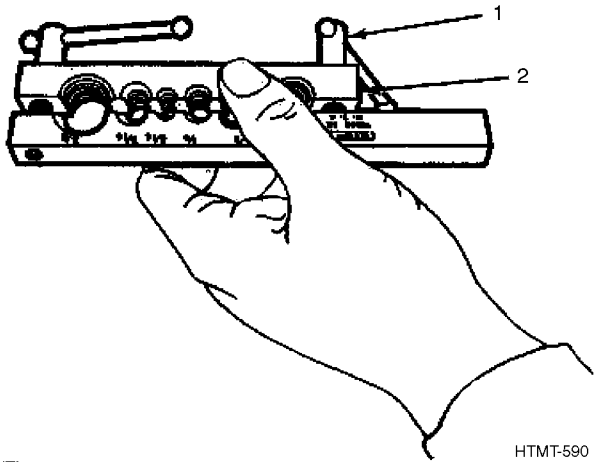

1. Loosen die block clamp screws (1), and open die block clamp (2).

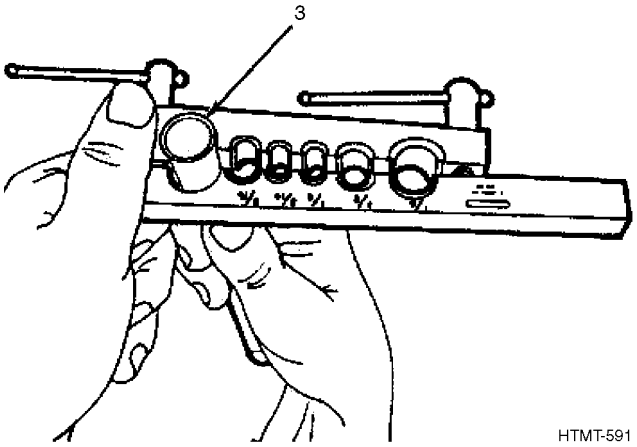

2. Insert tubing to be flared (3) into die block clamp.

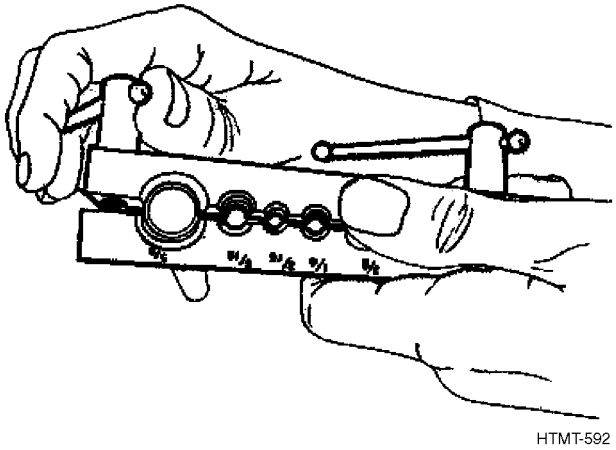

3. Hold tubing so there is about 1/8 inch extending above die block clamp, and tighten die block clamp screws.

NOTE

Do not over-tighten cutter as tubing may kink and flatten.

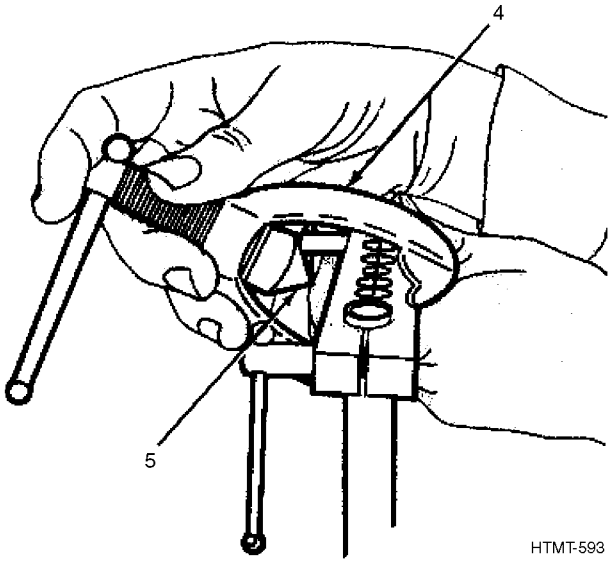

4. Slide yoke (4) over die block clamp, and align the tip (5) over the end of tubing.

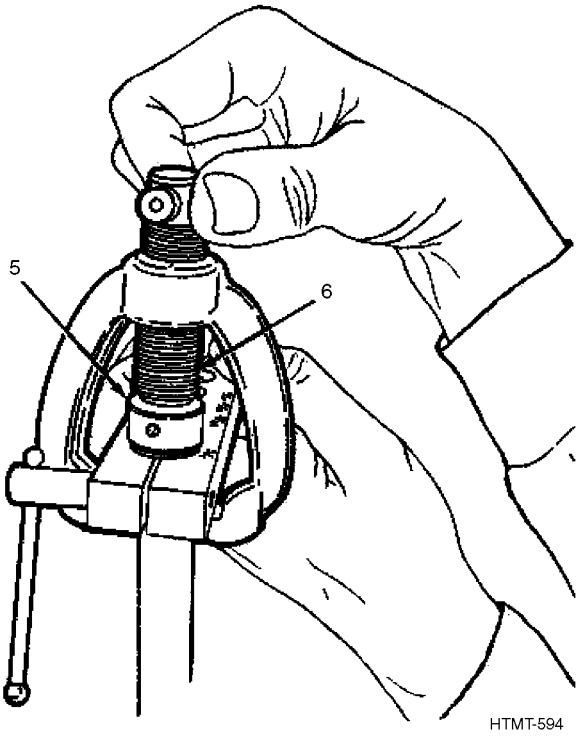

5. Tighten feed screw (6), forcing the tip (5) into the tubing and forcing the tubing into the chamber of the die block clamp.

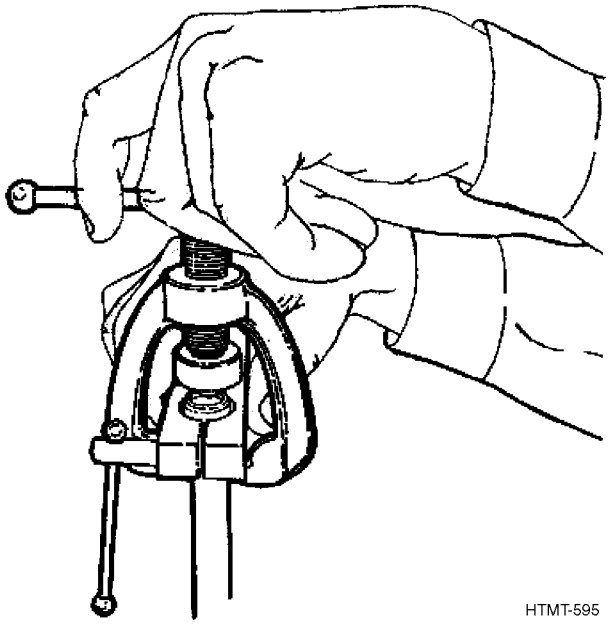

6. When desired flare is reached, unscrew feed screw, and remove yoke from die block clamp.

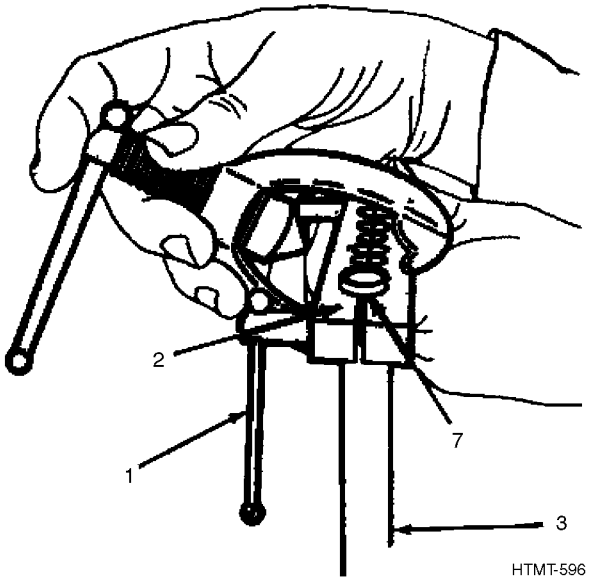

7. Unscrew die block clamp screws (1) and open die block clamp (2), releasing tubing (3).

8. Inspect flange (7) in tubing for cracks or breaks.

9. If a crack or break is detected, the tubing will have to be cut and reflanged.

36.4 CARE OF TUBE CUTTERS AND FLARING TOOLS.

36.4.1 Tube Cutters.

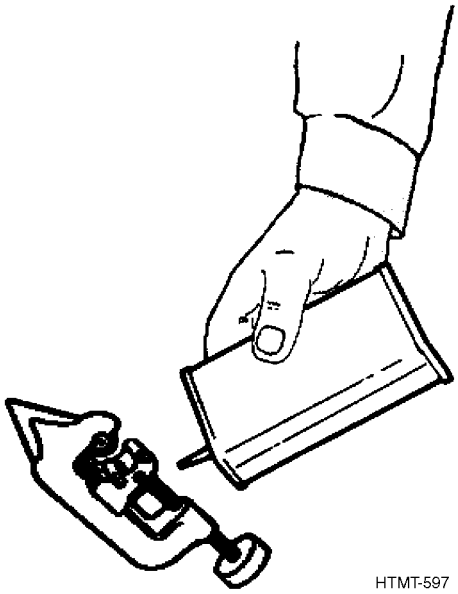

Keep cutting wheel clean and lightly oiled. If a reaming device is mounted on the body of the cutter, keep it retracted when not in use.

Store tube cutters on a rack or in a box.

36.4.2 Flaring Tool.

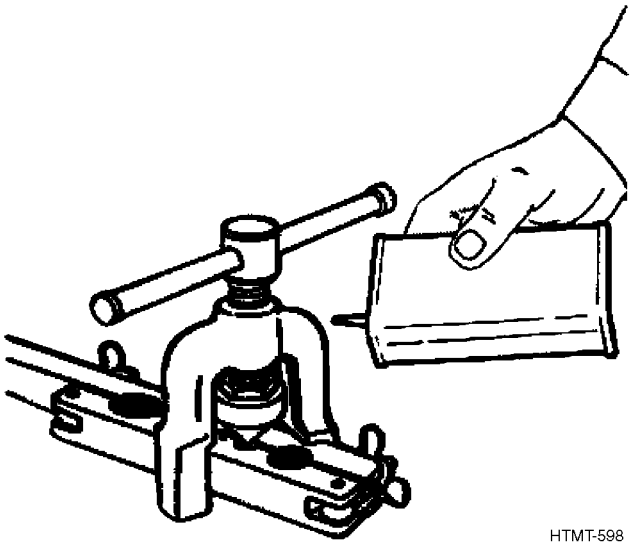

Keep surfaces clean and lightly oiled. Close single flaring tools and tighten cone into block for storing. Keep double flaring tools in the case when not in use.

CHAPTER 37
SHEARS AND NIPPERS

37.1 HOW TO CHOOSE AND USE THEM.

Types and Uses, Paragraph 37.2, provides you with a list of some of the types of shears and nippers. These pages should help you select the right tool to do the job. Using Cutting Nippers, Paragraph 37.4, tells you how to use the shears and nippers to perform the desired function. Care of Shears and Nippers, Paragraph 37.5, tells you ‘how to care for the items.

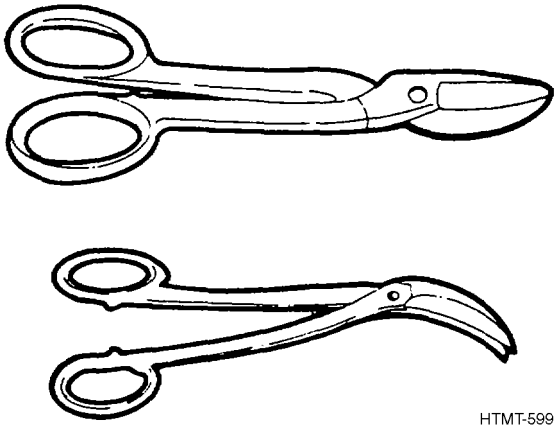

HTMT-599

37.2 TYPES AND USES.

Shears are used for cutting sheet metal and steel of various thicknesses and shapes. Shears come in a variety of styles and sizes.

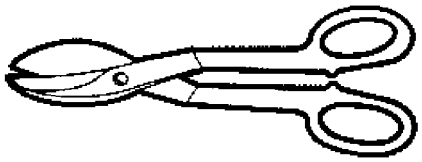

HTMT-600

37.2.1 Hand Shears. Hand shears are made with straight or curved cutting blades. Shears are made for right-handed operators so the cutline is always in full view for accurate cutting.

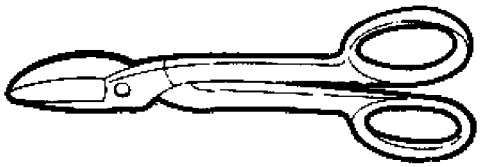

HTMT-601

Straight-bladed shears are used to cut straight lines or to cut curves in locations that are easily reached.

HTMT-602

Shears with curved blades such as the hawk bill and the curved blade hand shears are made especially for cutting short straight lines or curves. They are also used for cutting out small intricate designs in locations where it is necessary to keep the handles and handle-operating hand away from the metal stock.

37.2.2 Tinner’s Bench Shears.

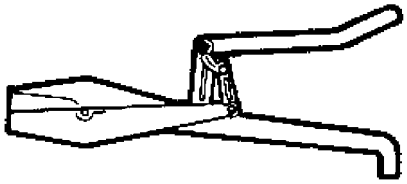

HTMT-603

The tinner’s bench shear is larger than a hand shear and is used for cutting heavy sheet metal. The lower handle has a hook which can be placed in a hole in the bench so that the operator will have a free hand to guide the work. The bench shear makes a 6-inch cut and is approximately 36 inches long.

37.2.3 Metal Shearing Machine.

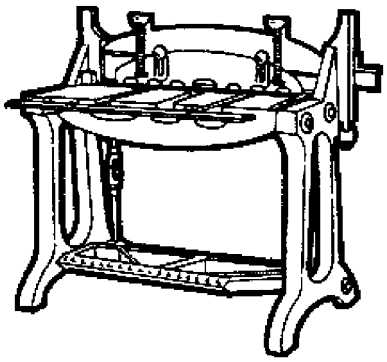

HTMT-604

The metal shearing machine is foot-operated and is used to cut original sheets into smaller, usable size stock. The shear blade is 36 inches long and will cut all sheet metal up to and including 1/16 inch of mild steel or 1/8 inch of iron.

37.2.4 Nippers.

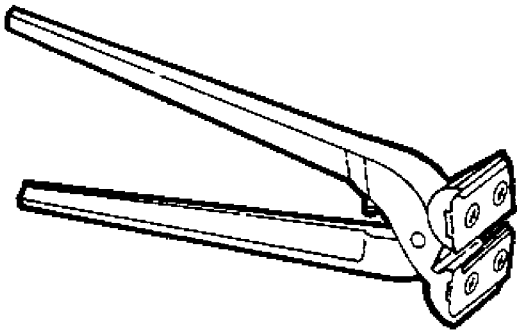

Nippers are used to cut protruding metal flush with a surface. They are also used to cut wire, bolts, nails, and light metal bars to specified dimensions. Nippers come in a variety of styles and sizes.

37.2.5 Cutting Nippers.

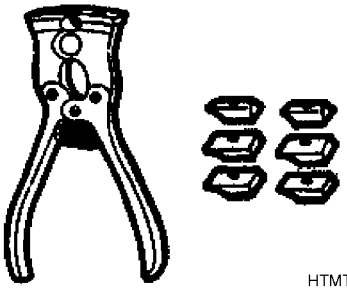

Cutting nippers are available with integral or detachable cutters. They are used to cut wire, light metal bars, bolts, nails, and to cut protruding metal flush with a surface. Some nippers have adjusting screw stops in the handle and adjustable jaws. Others have detachable jaws with compound leverage and come with three extra pairs of jaws. Cutting nippers range in size from 5-1/2 to 15 inches long and up to 1-3/4 inches in jaw widths.

37.3 SAFETY.

1. Keep fingers, hands, and other parts of the body clear of the cutting edges of bench shears, the shearing machine, hand shears, and nippers.

2. Do not carry shears or nippers in your pocket.

3. Always steady the work that is to be cut.

4. After use, be sure to hang the tools or store them in their proper place.

37.4 USING CUTTING NIPPERS.

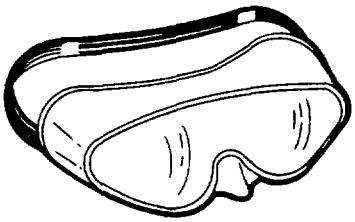

WARNING

Wear eye protection and watch the fingers.

37.4.1 Wire Cutting.

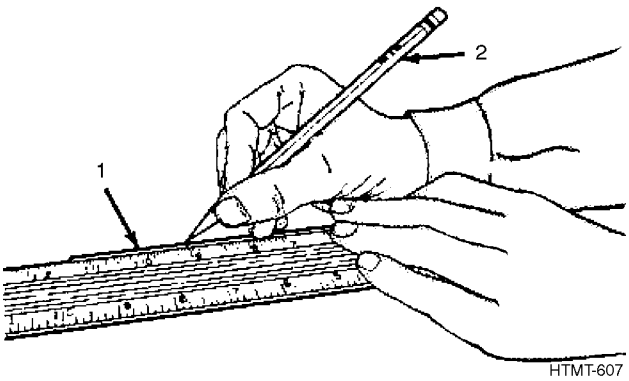

1. Place the wire (1) on the table. Measure the section to be cut off. Mark it with pencil, chalk, soapstone or other suitable marking piece (2).

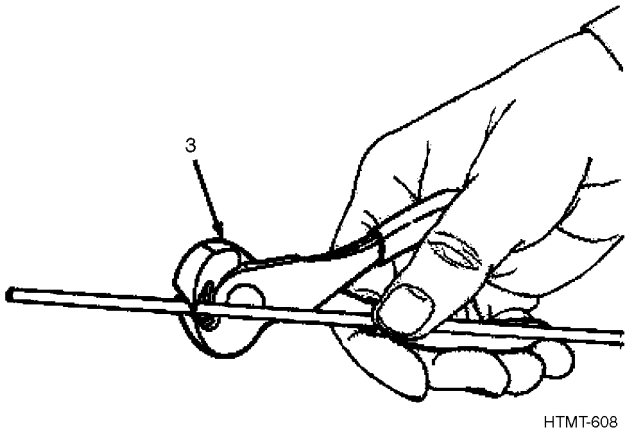

2. Take the nippers (3) in the right hand and place the cutting edge on the mark.

NOTE

Left-handed people will reverse this procedure.

3. Squeeze the handles together slowly, exerting enough pressure to cut the wire.

4. Repeat procedure for as many pieces of wire as need to be cut.

37.4.2 Flush Cutting.

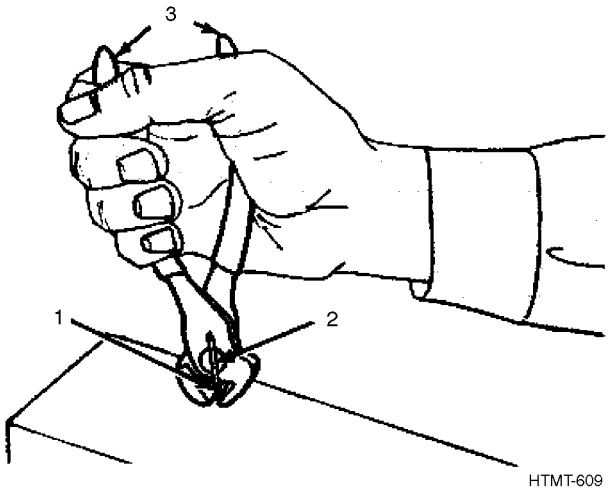

1. Place the cutting edge (1) of the nippers over the nail, wire, rivet, or bolt (2) that is to be cut flush with the surface.

2. Squeeze the handles (3) together slowly, exerting enough pressure to cut the materials.

3. File cut edge smooth to prevent injury.

37.5 CARE OF SHEARS AND NIPPERS.

1. Keep tools clean at all times. Lubricate the pivot screw or bolt with a drop of light oil.

2. Remove rust with a fine aluminum-oxide abrasive cloth.

3. Apply a thin film of oil on tools to prevent rust, and hang tools on hooks or place them on a shelf when not in use.

4. Do not throw cutting tools together in a box where the cutting edges may be damaged.

5. Do not use the shearing machine table as a storage place for other tools and work.

6. Do not attempt to cut material heavier than the tools or machines are designed to handle.

7. Do not use shears or nippers as hammers or pry bars, as they are easily damaged.

8. Dull shears can usually be sharpened on an oilstone or with a file.

CAUTION

Do not grind shears if sharpening is all that is necessary. Most shears become useless after two or three grindings.

9. Grind the shears and nippers only if the cutting edges become nicked, damaged, or distorted from improper sharpening or prolonged use.

10. For long-term storage, coat tools with a rust-preventive compound and store in a dry place where the cutting edges will not come in contact with other metal objects.

CHAPTER 38
TAPS AND DIES

38.1 HOW TO CHOOSE AND USE THEM.

Types and Uses, Paragraph 38.2, provides you with a list of some of the types of taps and dies. These pages should help you select the right taps and dies to do the job. Using, Paragraph 38.3, tells you how to use taps and dies to perform the desired functions. Care, Paragraph 38.5, tells you how to care for the item.

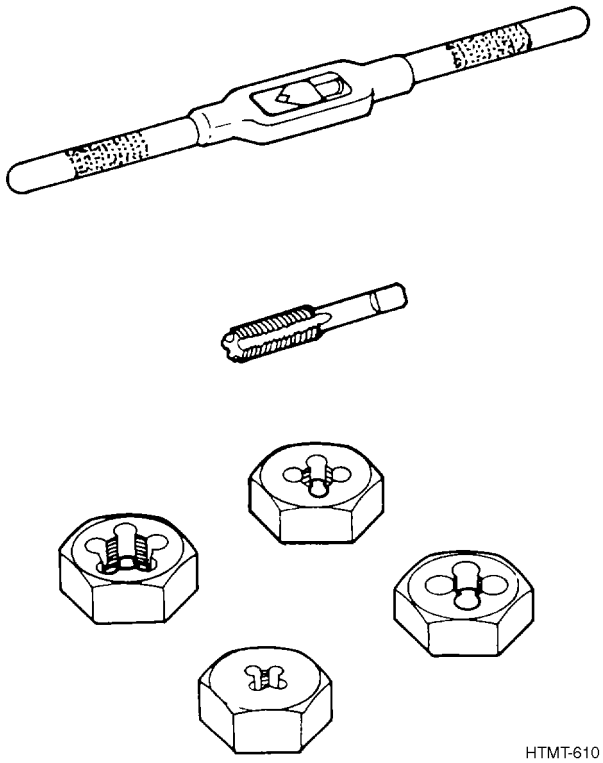

HTMT-610

38.2 TYPES AND USES.

Taps and dies are used to cut threads in metal, plastics or hard rubber. The taps are used for cutting internal threads, and the dies are used to cut external threads.

38.2.1 Taps.

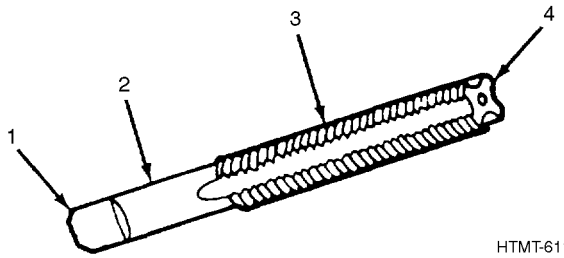

HTMT-611

Taps are made of hardened steel and have the following parts: a square end (1), a round shank (2), a body (threaded) section (3) and a chamfer (4). The square end is used to turn the tap with either a straight or T-handled tap wrench. The shank is a smooth, rounded section which is immediately behind the threaded section. The body (threaded) section contains four flutes which have threads cut into their upper edges. They have a hollow section near the center to permit metal shavings to fall away from the cutting edges. The chamfer is the non-threaded end of the tap. It allows the tap to be positioned squarely in the metal to be threaded without engaging the threads of the tap.

38.2.1.1 Taper (Starting) Hand Tap.

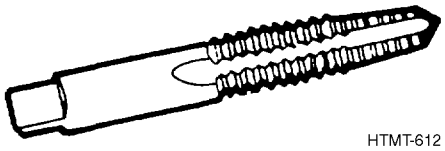

HTMT-612

The taper (starting) hand tap has a chamfer (non-threaded) length equal to eight to ten threads. The taper hand tap is used to start tapping operations.

38.2.1.2 Bottoming Hand Tap.

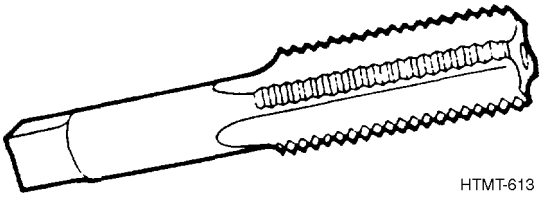

HTMT-613

The bottoming hand tap has a chamfer length equal to one to one and one-half threads. This tap is used for threading the bottom of a blind hole only after the taper and plug taps have been used.

This tap is also used when tapping hard materials.

38.2.1.3 Pipe Hand Tap.

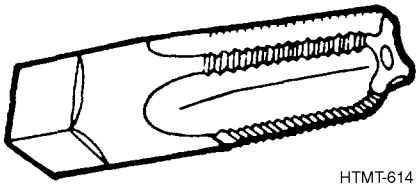

HTMT-614

The pipe tap has a tapered diameter which increases at a rate of 3/4 inch per foot. All the threads on the pipe tap are designed to cut pipe. The pipe tap is used for cutting pipe fittings and in other places where extremely tight fits are required.

38.2.1.4 Boiler Hand Taps. There are two types of boiler taps, straight and tapered.

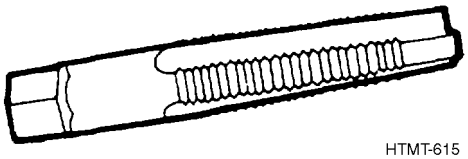

HTMT-615

Straight boiler taps range in size from 1/2 inch to 1-1/2 inches in diameter and have a chamfer for starting the tap.

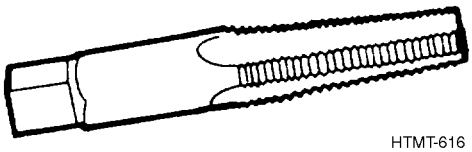

HTMT-616

Tapered boiler taps have tapered diameters which increase at a rate of 3/4 inch per foot.

38.2.1.5 Staybolt Taps.

HTMT-617

Staybolt taps are used in boiler, locomotive, and railroad shops for tapping holes in the outer and inner plates or shells of boilers. The staybolt tap has two separate threaded areas. The first is for cutting threads and the second is for guiding the tap into another piece of metal for threading by the cutting threads. The spindle-type staybolt has an adjustable spindle which changes the distance between the cutting threads and the guide threads.

38.2.1.6 Mud Hand Taps (Washout Tap).

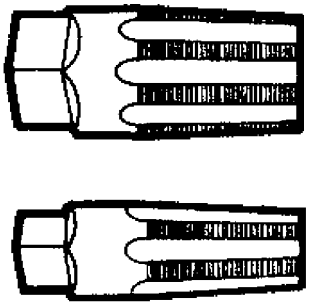

HTMT-618

The mud or washout tap has six flutes, tapers 1-1/4 inch per foot, and has 12 threads per inch. It is used for cutting American National or V-form threads in mud plug drain holes.

38.2.2 Dies.

38.2.2.1 Rethreading Die.

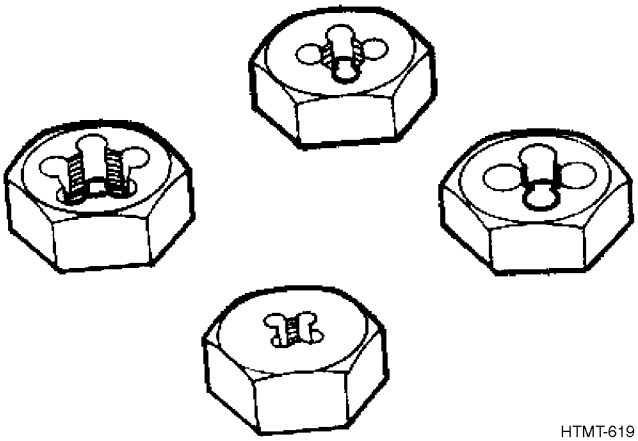

HTMT-619

Rethreading dies are used to restore bruised (rounded) or rusty threads on screws and bolts. The rethreading die is hexagonal in shape and may be turned with a socket, box, open-end, or any other wrench that will fit. They are available in American Coarse and Fine Threads. Rethreading dies are available in a variety of sizes and are usually assembled in sets with a case.

38.2.2.2 Two-Piece Collet Die.

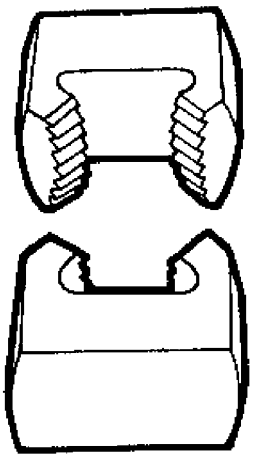

HTMT-620

The two-piece collet die consists of the two die sections, the collet cap, and collet guide. The die sections are placed inside the cap and held in place by the guide. Adjustment of the die is done by turning setscrews on either end of the internal slot. They are used to cut American Standard Coarse and Fine Threads and are available in assorted sizes.

38.2.2.3 Round Split Adjustable Die.

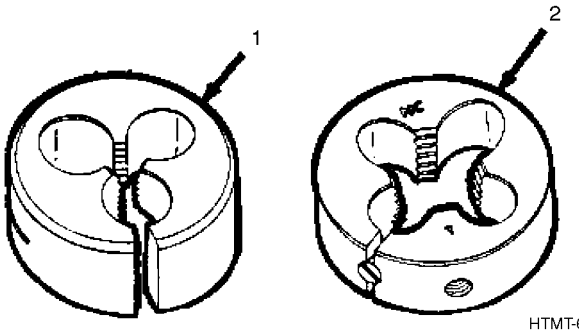

HTMT-621

The round split adjustable die (1), or button die, may be adjusted through the screws on the holder. Adjustment on the open type is done by turning the three screws on the holder. One expands the die while the other two compress the die. Adjustment of the screw type (2) is done by turning a fine-pitch screw that either forces the die jaws apart or allows them to spring together. The round split adjustable dies are used to cut American Standard Coarse and Fine Threads. A die holder or handle is needed for proper operation of round split adjustable dies.

38.2.2.4 Thread Cutter Set.

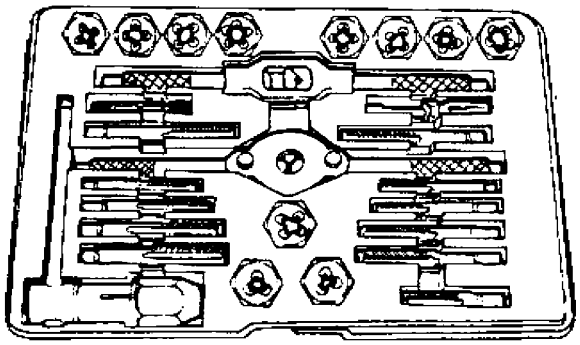

HTMT-622

The thread cutter set is made up of a combination of taps, dies, diestocks, tap wrenches, guides, and screwdrivers and wrenches for making adjustments. Thread cutter sets are used for cutting internal and external threads.

38.3 USING A HAND TAP.

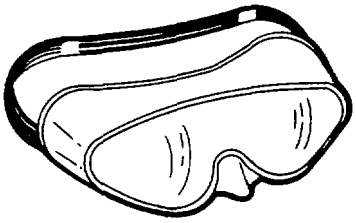

WARNING

Wear eye protection.

NOTE

The following procedures may also be followed when using a taper tap or a bottoming hand tap.

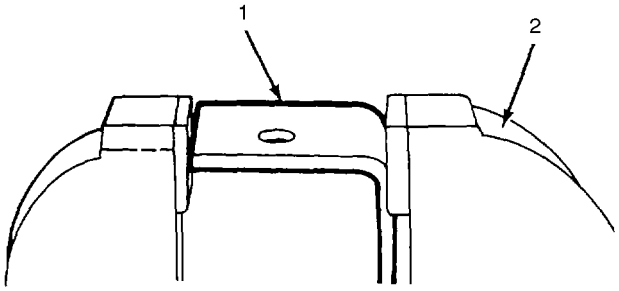

HTMT-623

1. Clamp a steel plate (1) securely in a vise (2). Drill and ream a hole of desired size.

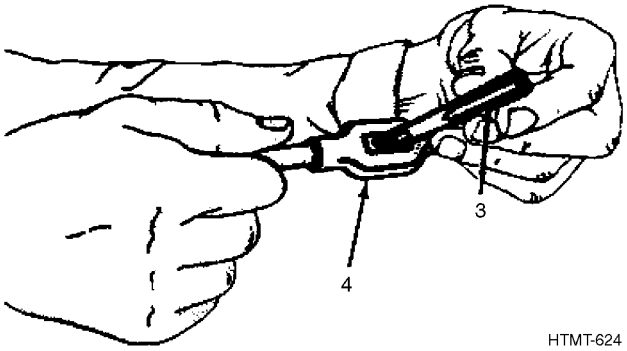

2. Select tap (3) and secure in tap wrench (4).

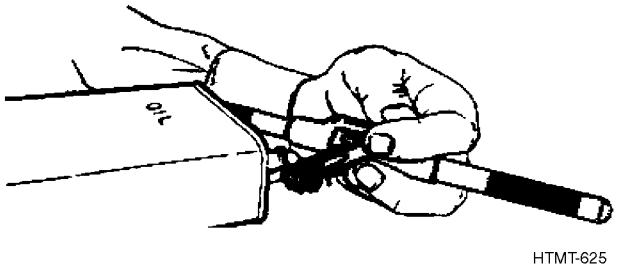

3. Apply cutting oil to the tap and the hole.

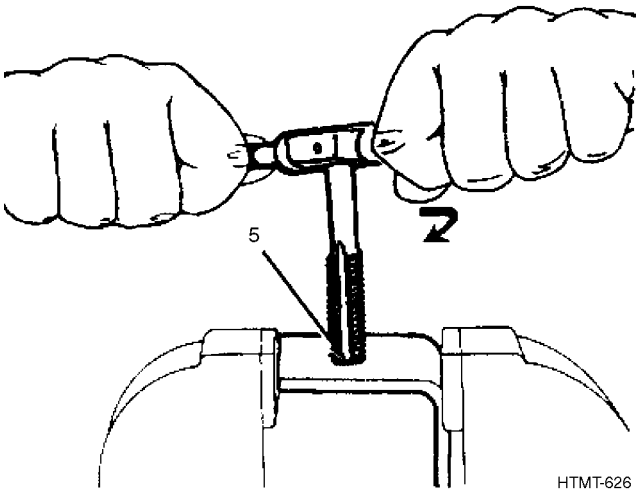

4. Place point of the tap in hole (5) and rotate clockwise for right-hand threads or rotate lefthanded tap counter-clockwise for left-hand threads.

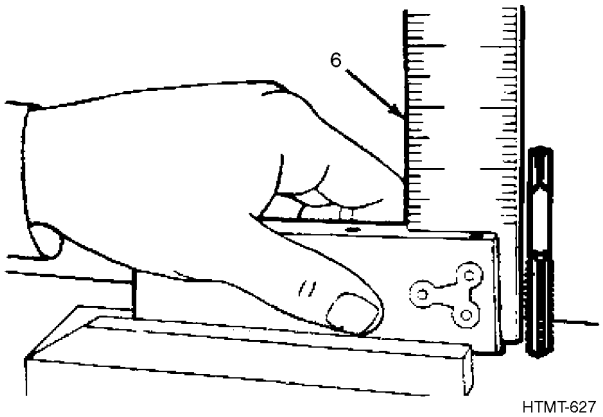

5. Remove tap wrench and, using a square (6), check tap for squareness. Check at least two different positions on the tap.

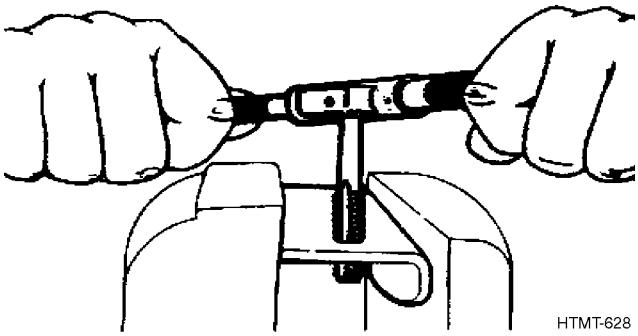

6. Replace the tap wrench and continue tapping operation. It is not necessary to apply pressure, as the threads will be pulled through at all times.

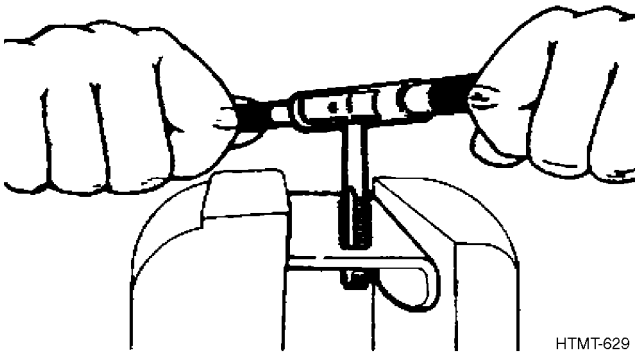

7. Remove tap by turning in the opposite direction. Wipe excess oil and metal shavings from metal plate. Check newly-cut threads with screw pitch gage before inserting screw or stud.

38.4 USING A DIE AND DIESTOCK.

NOTE

Work to be threaded must be clean and free of burrs.

1. Secure the work (1) firmly in a vise (2).

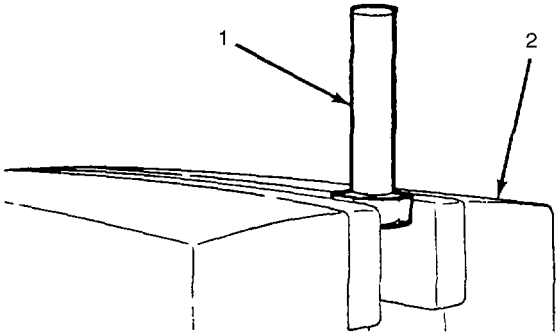

HTMT-630

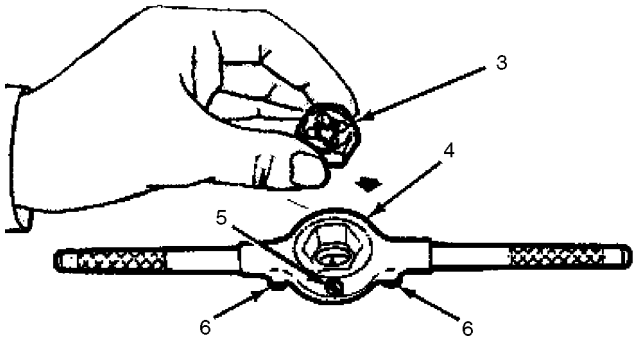

HTMT-631

CAUTION

After assembling die to diestock, make sure setscrew is tight. Die could fall out of diestock causing damage to die.

2. Assemble die (3) and diestock (4). Tighten setscrew (5). Loosen the two thumbscrews (6) to adjust diestock (4).

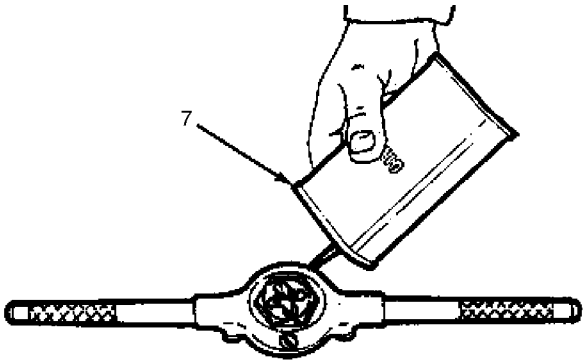

HTMT-632

3. Apply cutting oil (7) to the die and to the work.

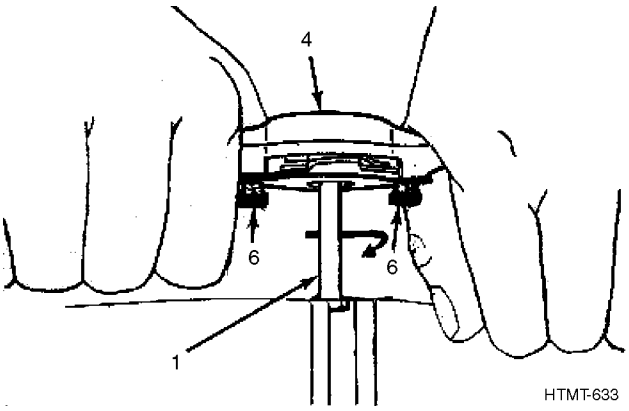

HTMT-633

4. Position the diestock (4) over the work (1).

5. Tighten thumbscrews (6) securing diestock to work.

6. Rotate the diestock (4) clockwise, slowly but firmly, until the die takes hold.

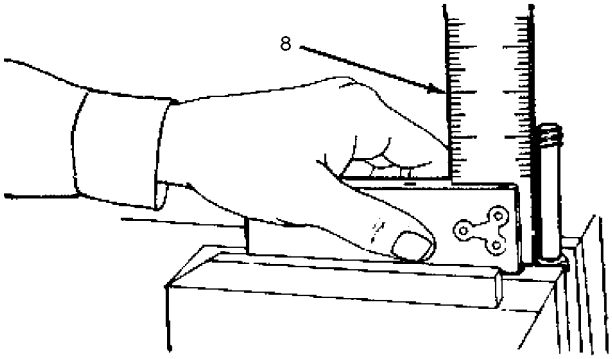

HTMT-634

7. Use square (8) to check squareness after several threads have been cut.

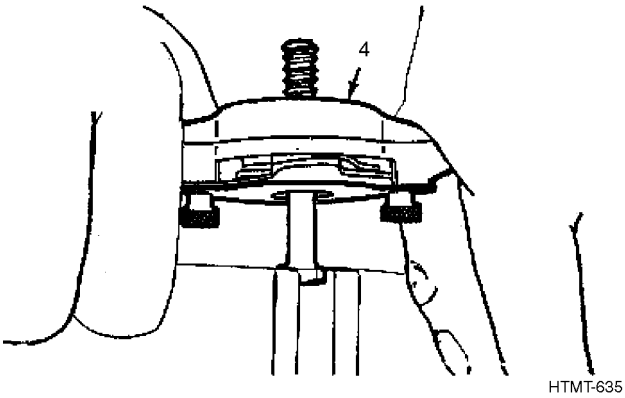

8. Turn the diestock (4) one turn forward and one-quarter turn backward. Repeat this procedure until desired thread length has been cut.

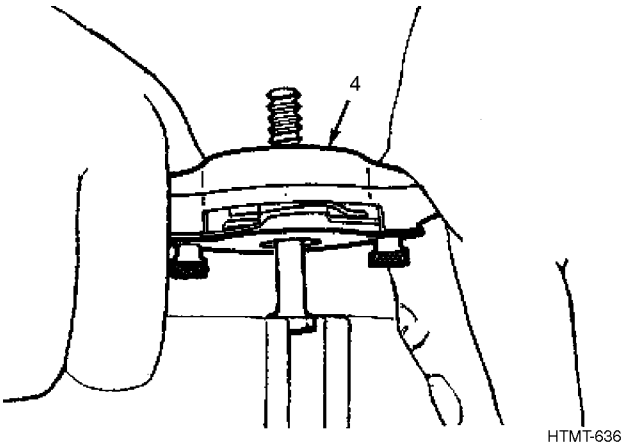

9. Carefully back the diestock (4) off the threads by turning in a counterclockwise direction.

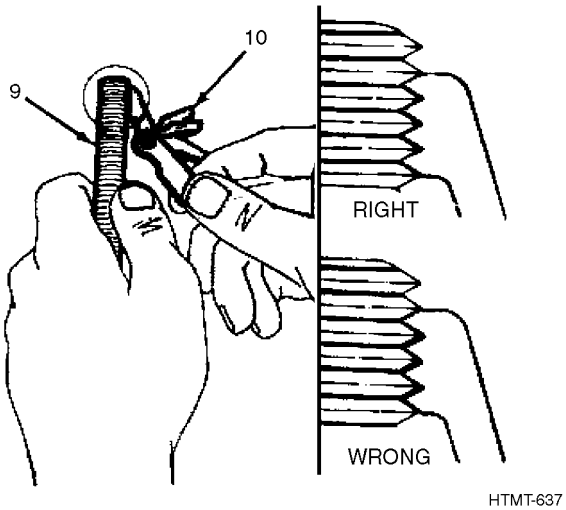

10. Clean threads (9) with a clean rag and check with a screw pitch gage (10) before using.

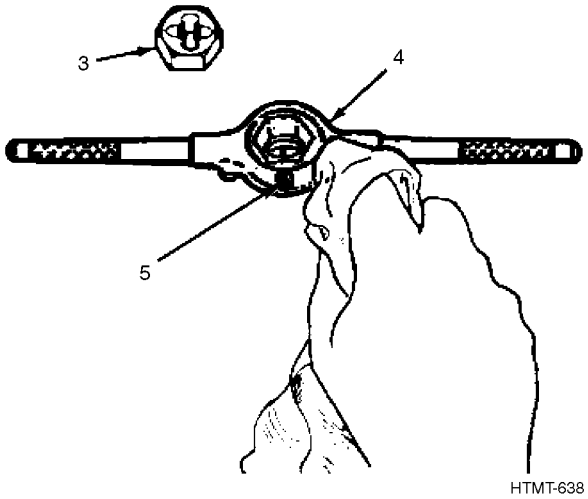

11. Disassemble die (3) and diestock (4) by loosening setscrew (5). Wipe clean with a rag.

38.5 CARE OF TAPS.

1. Do not attempt to sharpen taps.
2. Keep cutting edges lightly oiled.
3. Wipe excess oil and metal shavings from tap and tap-wrench.
4. Store them in a case or wrap individually in cloths to protect cutting surfaces.

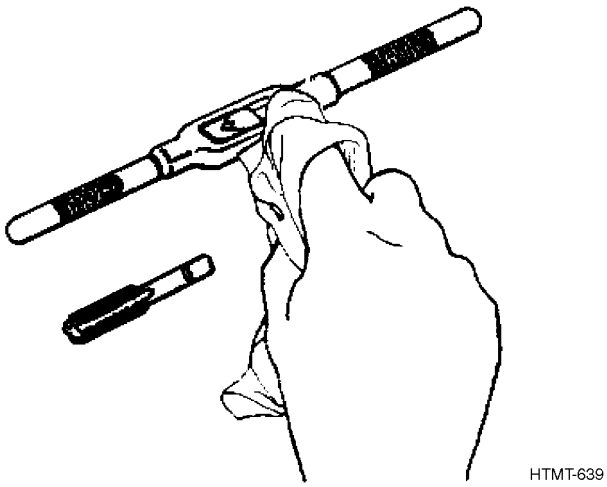

38.6 CARE OF DIES.

1. Do not attempt to sharpen dies.
2. Keep cutting surfaces clean and lightly lubricated.
3. Store in a case or wrap individually in cloths where they will not come in contact with other tools.

CHAPTER 39
REAMERS

39.1 HOW TO CHOOSE AND USE THEM.

Types and Uses, Paragraph 39.2, provides you with a list of some of the types of reamers. These pages should help you select the right reamer to do the job. Using, Paragraph 39.3, tells you how to use the reamer to perform the desired function. Care of Reamers, Paragraph 39.4, tells you how to care for the items.

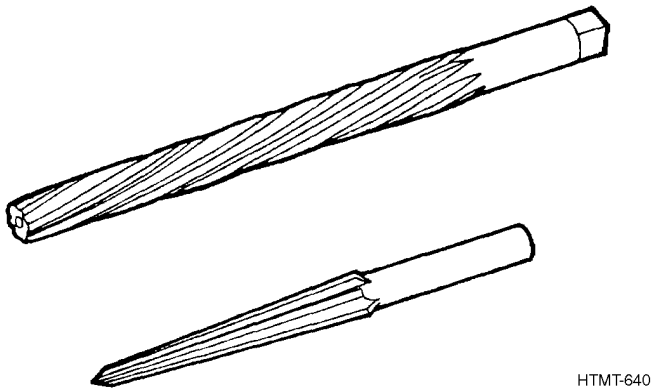

39.2 TYPES AND USES.

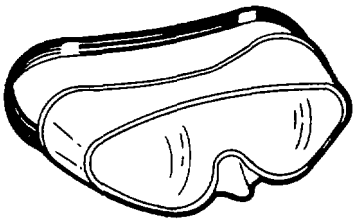

WARNING

Wear eye protection when using reamers.

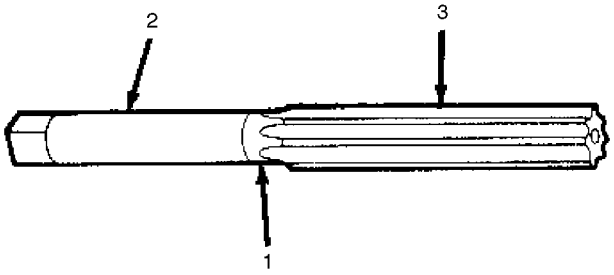

Reamers are used to enlarge and true a hole. They are also used to remove burrs from the inside diameters of pipes and drilled holes. The reamer consists of three parts, the body (1), the shank (2), and the blades (3). The shank has a square tang to allow the reamer to be held with a wrench for turning.

39.2.1 Solid Straight-Hole Reamer.

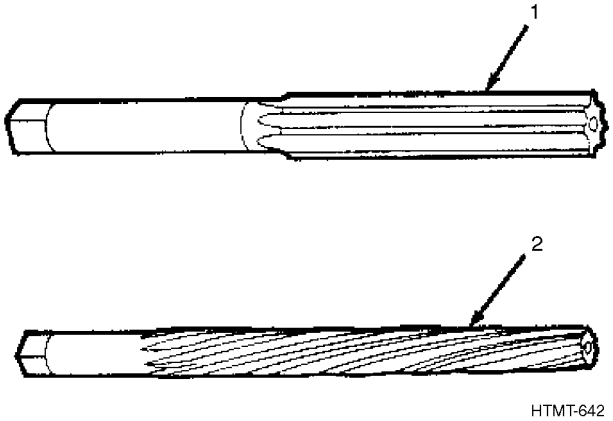

A solid straight-hole reamer is made of one solid piece of high-speed steel having a straight shank and straight (1) or spiral flutes (2). The cutting edges, or lands, between the flutes are usually evenly spaced. Some have irregularly spaced lands to prevent the tool from chattering. They come in sizes from 1/16 inch to include 3-inch diameters. Reamers are also available in sets containing 25 reamers in 1/64-inch increments from 1/8 inch to 1/2 inch. The sets may be mixed to include straight and taper pin reamers. Each reamer size is stamped on the shank of the tool. Solid straight-hole reamers are used for most work since they are the most accurate and the most rugged of the straight-hole reamers.

39.2.2 Solid Taper-Pin Reamer.

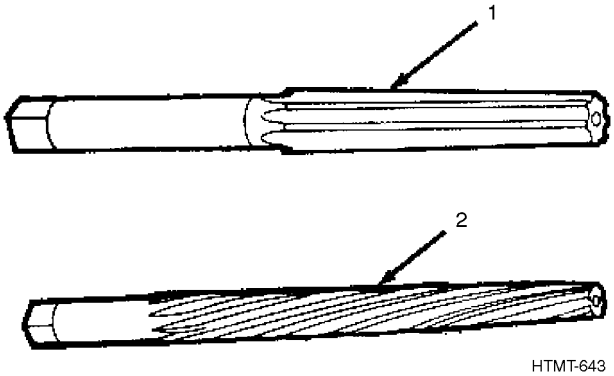

Solid taper-pin reamers are used to finish tapered holes for the insertion of tapered pins or other tapered parts. They are made with a standard taper of 1/4 inch per foot. Solid taper-pin reamers come with straight (1) or spiral flutes (2). Sizes range from 5/0 to 14, with the diameter at the large end ranging from 0.0984 to 1.5412 inches. They also come in sets of 10, sizes 3/0 to 7, and a set of 11, sizes 0 to 10. They are also included in mixed sets of straight and taper-pin reamers.

39.2.3 Expansion Reamer.

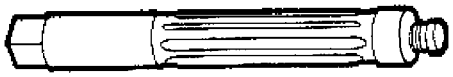

HTMT-644

Expansion reamers are adjustable, and their sizes may be changed by 1/8 inch for a 1-inch reamer and 5/16 inch for a 2-inch reamer. The expansion reamer is made of carbon steel and has longitudinal cuts in some of its flutes. It is hollowed out and threaded to receive a tapered screw plug. The diameter of the reamer is changed by screwing in or backing out the screw plug. The standard sizes range from 1/4 inch to 1 inch, by 32nds. A 1/4-inch expansion reamer will enlarge the hole to a 9/32-inch hole, etc. It is used for general purposes and is considered the most practical reamer.

39.2.4 Adjustable-Blade Reamer.

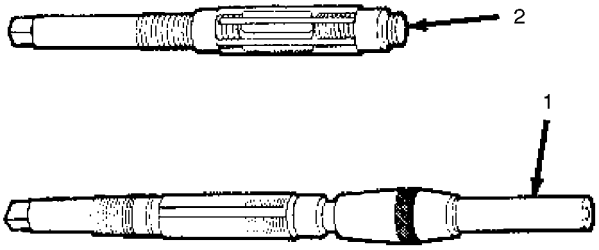

HTMT-645

The blades of an adjustable reamer are separate from the body and are fitted into grooves in the threaded shank of the tool. Adjusting nuts located below and above the blades control the diameter of the reamer. The reamers come with straight (1) or spiral flutes (2), with or without a floating pilot on solid mandrels, and in several sizes. Adjustable reamers are also available in sets. They are used to enlarge drilled holes to an exact true size using a series of small cuts rather than one deep cut.

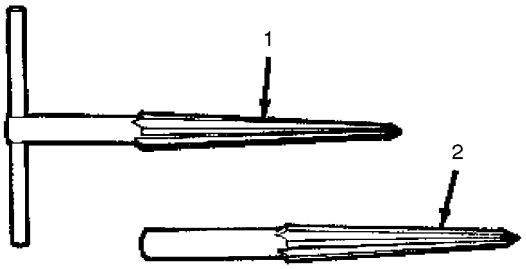

HTMT-646

Pipe reamers are made of carbon steel. They are tapered with straight or spiral flutes. They come in three sizes, 1/8-inch to 1-inch pipe capacity, 1/4-inch to 1-1/4-inch pipe capacity, and 1/4-inch to 2-inch pipe capacity. Most pipe reamers are designed to receive a T-handle (1). Others (2) have a tapered square shank for use with a brace, or a round shank for use with a hand drill. They are used to remove burrs from the inside diameters of pipe and drilled holes.

39.3 USING A SOLID STRAIGHT-HOLE REAMER.

1. Secure the work in a vise so that the hole to be reamed is perpendicular to the top of the vise jaws.

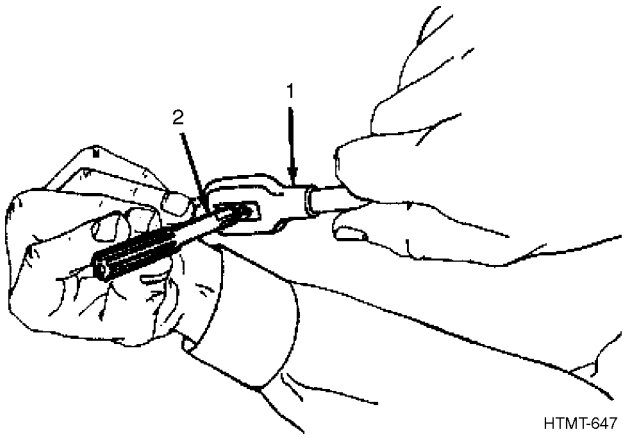

HTMT-647

2. Using a tap wrench (1), tighten the handle to the square end of the reamer shank (2).

CAUTION

Do not turn the wrench counterclockwise at any time. To do so will cause the reamer to become dull.

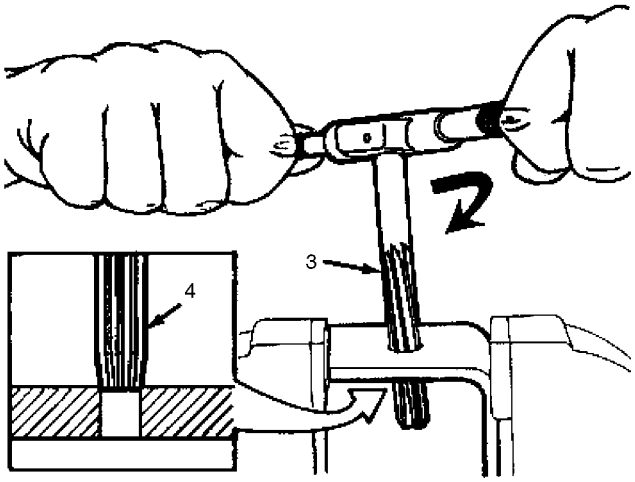

HTMT-648

3. Position the reamer (3) at the top of the hole. Turn the wrench clockwise very slowly until the reamer is centered in the hole. Straight-hole reamers (4) have a slight taper at the end so they will fit into the hole easily.

4. Turn the wrench clockwise with a steady, firm pressure until the reamer has been turned in the hole. When reaming steel, use cutting oil or machine oil to lubricate the tool. When reaming soft iron, do not lubricate the tool. Turning the wrench too fast or too slowly will cause the reamer to chatter, producing an unevenly reamed hole.

5. Remove the reamer from the hole by turning the wrench clockwise and raising the reamer at the same time.

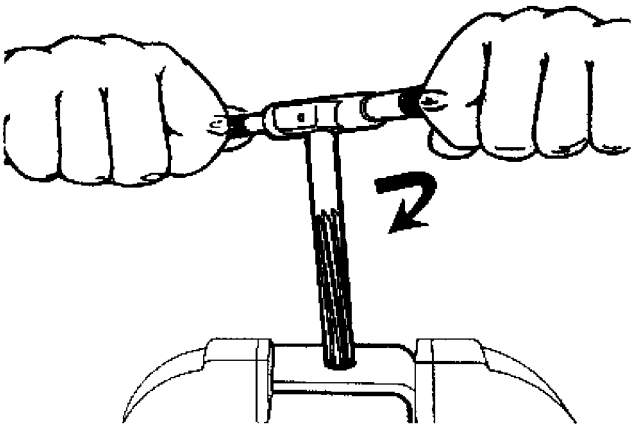

HTMT-649

39.4 CARE OF REAMERS.

1. Keep reamers absolutely clean to do accurate work.

2. Do not use the reamer to remove more than 0.002 to 0.003 inches of metal. If the hole is too small, enlarge it with a drill before reaming it.

3. If the proper pressure is applied in use and the reamer chatters, replace it to insure accurate work.

4. If the reamer edges are only slightly dulled, honing the edges on an oilstone may restore the sharpness On an adjustable reamer, the blades may be replaced.

5. To prevent chipping or dulling the reamer when you are reaming a hole, turn the reamer in the cutting direction only.

6. To prevent damage to reamers for long and short term storage, ensure reamers are cleaned of all debris and individually separated where they will not come in contact with each other, or other tools. If at all possible, store the reamers in their original shipping containers.

CHAPTER 40
BENDERS

40.1 HOW TO CHOOSE AND USE THEM.

Types and Uses, Paragraph 40.2, provides you with a list of some of the types of benders. These pages should help you select the right bender to do the job. Using, Paragraph 40.3, tells you how to use the bender to perform the desired function. Care of Benders, Paragraph 40.5, tells you how to care of the items.

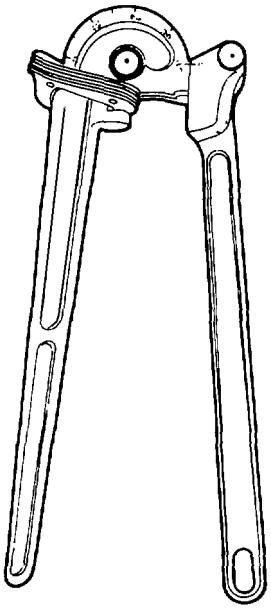

HTMT-650

40.2 TYPES AND USES.

40.2.1 Spring Tube Benders.

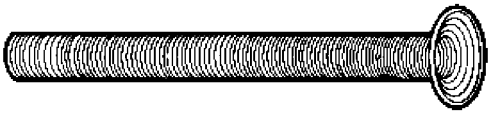

HTMT-651

There are two types of spring tube benders, external and internal. The spring tube bender permits the bending of small diameter tubing by hand without collapsing the tubing.

External benders are used to bend straight sections of tubing which have at least one end which has not been flared. They are available in 1/4, 5/16, 3/8, 7/16, 1/2, and 5/8-inch diameters.

Internal benders are used for bending straight sections of tubing which have both ends flared. They are available in 3/8, 1/2, and 5/8-inch outside diameters.

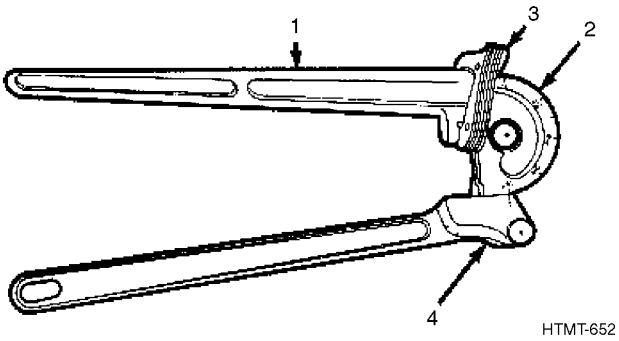

HTMT-652

The hand tube bender consists of the following components: a handle (1), a radius block (mandrel) (2), a clip (3), and a slide bar (4). The radius block is graduated from 0 to 180 degrees, and the slide bar has a scribe mark which indicates the degree of bend. These benders are available in 3/16, 1/4, 5/16, 3/8, and 1/2-inch sizes. The hand tube bender is used to bend copper, brass, or aluminum tubing to specific angles.

40.2.2 Electrical Conduit Hand Bender.

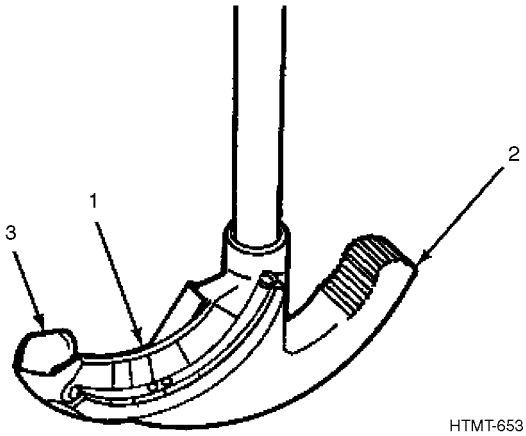

HTMT-653

The electrical conduit hand bender has precise grooves to insure a smooth bend. It has a concave base (1), a foot rest (2), and a retaining hook (3) to keep conduit from slipping as it is being bent. The bender has a threaded opening for attaching a threaded piece of pipe to be used as a handle. Electrical conduit hand benders are available in 1/2, 3/4, 1, 1-1/4, 1-1/2, and 2 inches in diameter. They are used to bend thin wall and rigid conduit to allow for flat installation on inside building walls.

40.3 USING A TUBING BENDER.

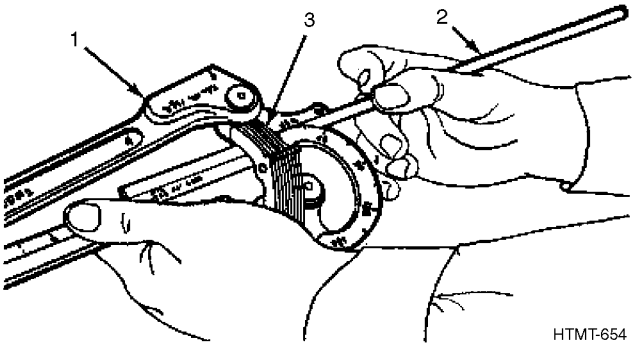

1. Raise slide bar (1) and insert tubing (2) to be bent.

2. Raise locking clip (3) and lock tubing in place.

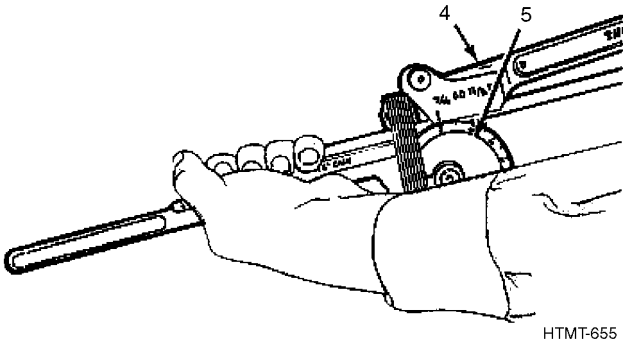

3. Lower slide bar. The zero mark (4) on the slide bar should match up with the zero mark on the block (5).

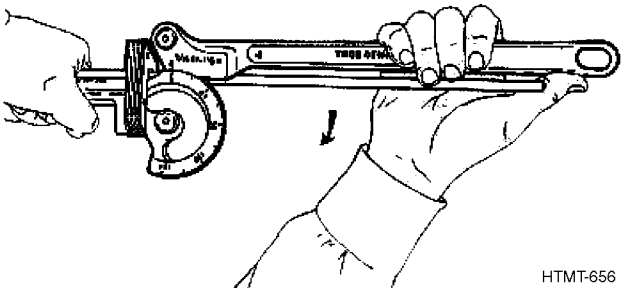

4. Apply downward pressure on the slide bar.

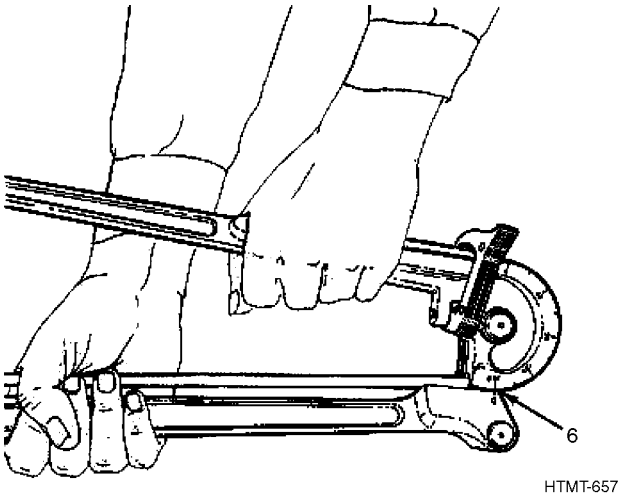

5. Stop bending the tubing when the zero mark on the slide bar matches the desired angle (6) on the block.

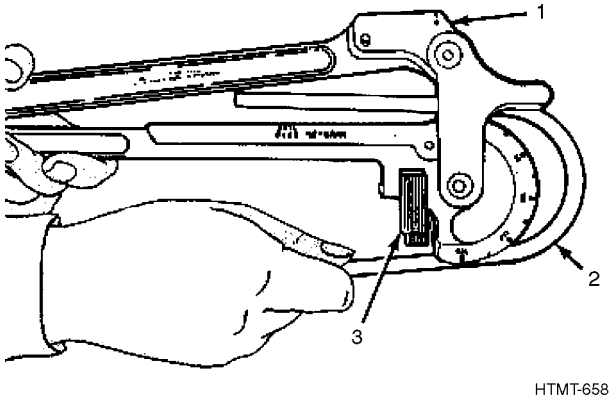

6. Raise the slide bar (1), lift up the locking clip (3), and remove the bent tube (2).

40.4 USING AN ELECTRICAL CONDUIT HAND BENDER.

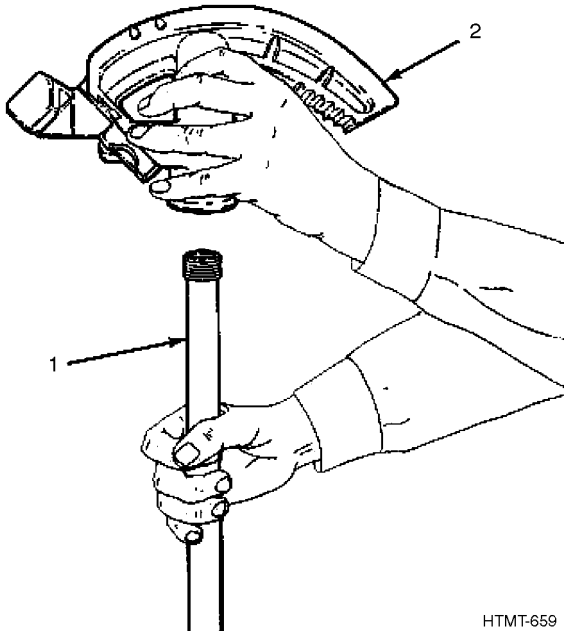

1. Install handle (1) on bender (2). A section of threaded pipe may be used as a handle.

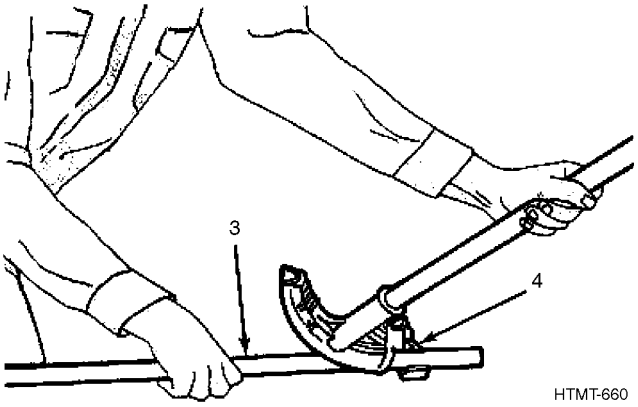

2. Tip the bender forward and slide the section of conduit (3) to be bent through the retaining hook (4).

3. Place mark where bend is to start opposite the arrow on the front end of the bender.

CAUTION

Do not jerk the handle, as this will create internal cracks and ridges inside the conduit which will cut the wires.

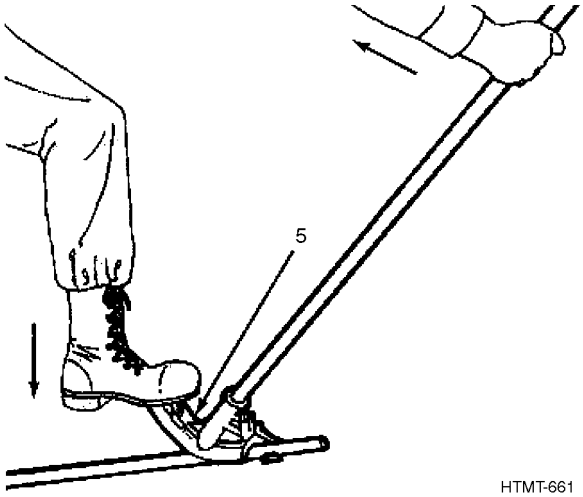

4. Place one foot on the foot rest (5) and push down with your foot while pulling back on the handle. Apply steady pressure throughout the entire bending process.

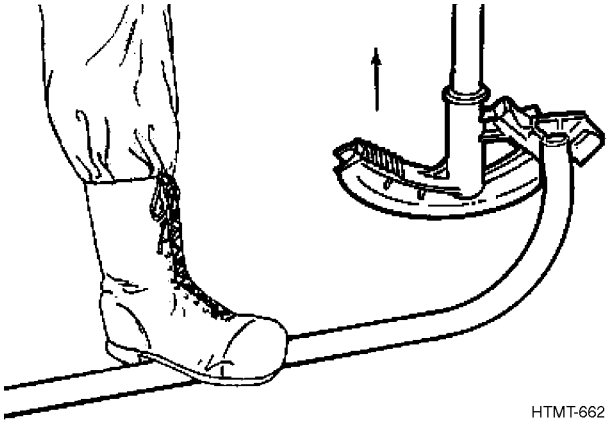

5. When desired bend has been obtained, release the pressure on the conduit by returning the handle to an upright position and slide the conduit out of the bender.

40.5 CARE OF BENDERS.

1. Clean all grease and oil from gripping surfaces with a rag.

2. Apply a light coat of oil to non-gripping surfaces.

3. Store in a safe, dry place.

CHAPTER 41
PULLERS

41.1 HOW TO CHOOSE AND USE THEM.

Types and Uses, Paragraph 41.2, provides you with a list of some of the types of pullers. These pages should help you select the right puller to do the job. Using, Paragraph 41.3, tells you how to use the puller to perform the desired function. Care of Pullers, Paragraph 41.5, tells you how to care for the items.

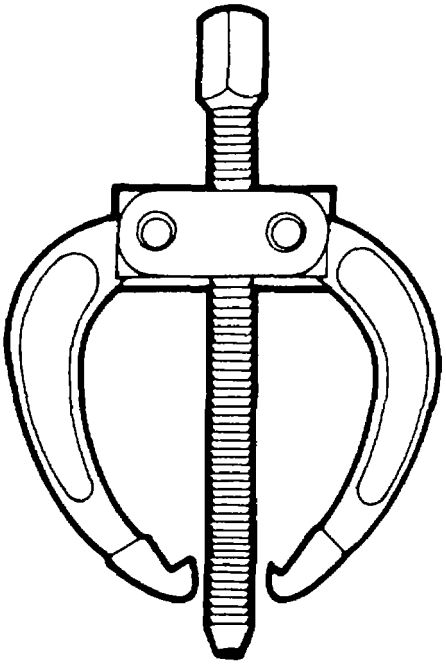

HTMT-663

41.2 TYPES AND USES.

41.2.1 Universal Gear Puller.

HTMT-664

The universal gear puller is usually of yoke and screw construction with two jaws. The jaws have a capacity from 0 to 14 inches in diameter. The universal gear puller is used for pulling gears, pulleys, and wheels.

41.2.2 Gear and Bearing Puller.

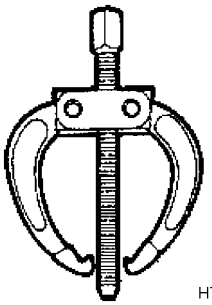

HTMT-665

The gear and bearing puller is used to pull gears, bearings, pinions, sheaves, pulleys, and wheels. It is a screw-type puller with two jaws. The grip tightens as pull is increased. The gear and bearing puller has a maximum spread of 5-1/2 inches.

41.2.3 Universal Bearing and Bushing Puller.

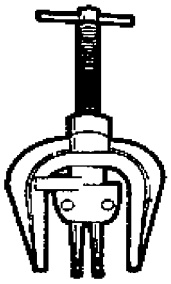

HTMT-666

The universal bearing and bushing puller has interchangeable jaws. It provides a pulling capacity of up to 1-1/4 inches. The larger jaws are used for removing bronze or oilite bushings without crumbling them. The smaller jaws are used to pull clutch pilot bearings.

41.2.4 Electrical Unit Bearing Puller.

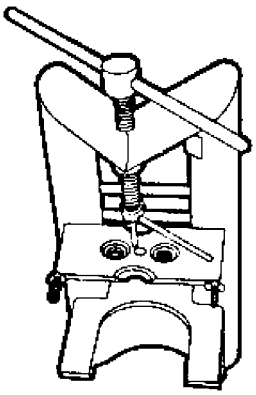

HTMT-667

The electrical unit bearing puller is used to pull bearings from shafts of electrical units. It is supplied with plates to fit a variety of unit constructions and to fit behind the particular shaft bearings to be pulled.

41.2.5 Battery Terminal and Small Gear Puller.

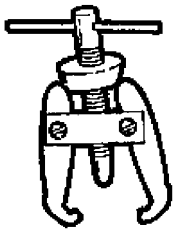

HTMT-668

The battery terminal and small gear puller is a screw-type puller for use in close quarters. In addition to pulling battery terminals, it is used to pull small gears and bearings.

41.2.6 Steering Gear Arm Puller.

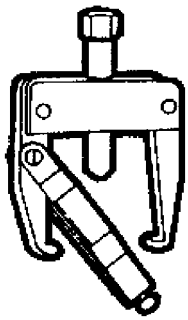

HTMT-669

The steering gear arm puller is used for pulling steering gear arms. It also can be used for a wide variety of other pulling jobs. The clamp locks the puller on the arm, leaving both hands free for pulling.

41.2.7 Push and Pull Puller Set.

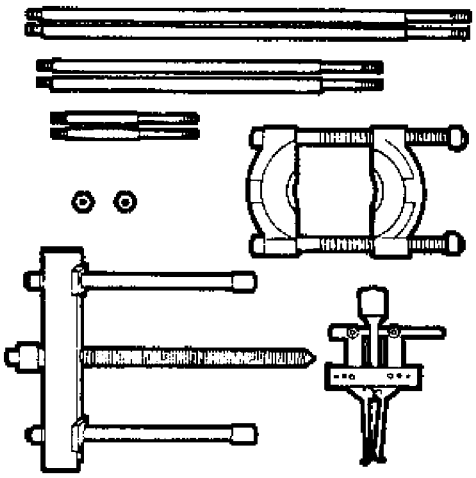

HTMT-670

The push and pull puller set is used in conjunction with a variety of attachments and adapters. The push and pull puller consists of a 13-1/2-inch steel bar which is slotted to receive two 9-1/2-inch legs. A pressure screw in the center of the bar is 13 inches long. It has a diameter of one inch, and it is threaded. This puller is universal and versatile. With the use of the bearing pulling attachment, bearing cup pulling attachment, sheave puller attachment, threaded adapters, step plate adapters, additional legs, and many other special adapters, this puller is capable of removing or replacing bearings, gears, pinion, pulleys, wheels, and bushings. The push and pull puller set has many other uses.

41.2.8 Steering Wheel Puller Set.

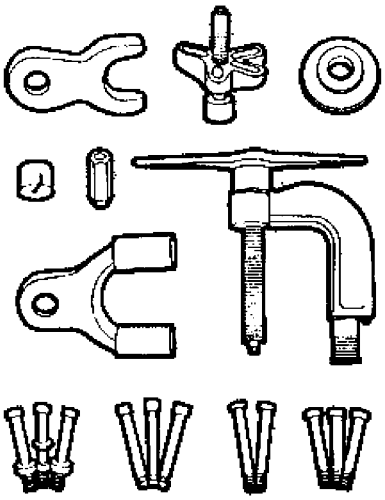

HTMT-671

The steering wheel puller consists of all the units necessary for removal of steering wheels from early models of cars and trucks up to the present models.

41.2.9 Wheel Puller Set.

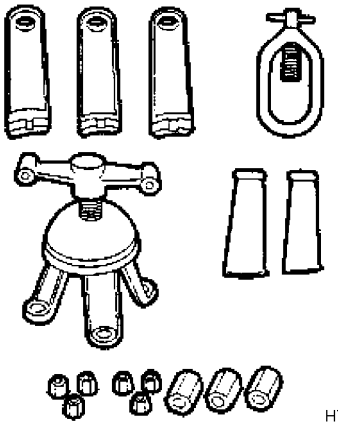

HTMT-672

The universal wheel puller set consists of a body and drive assembly that receives three long jaws, three short jaws, or a special grooved hub set. The interchangeable jaws pivot and

swing to any desired bolt circle. Tapered, right and left hand threaded stud nuts complete the set all of which are carried in a metal case. The wheel puller set is capable of pulling any demountable wheel hub for any passenger car, and most light-weight trucks.

41.2.10 Cylinder Sleeve Puller.

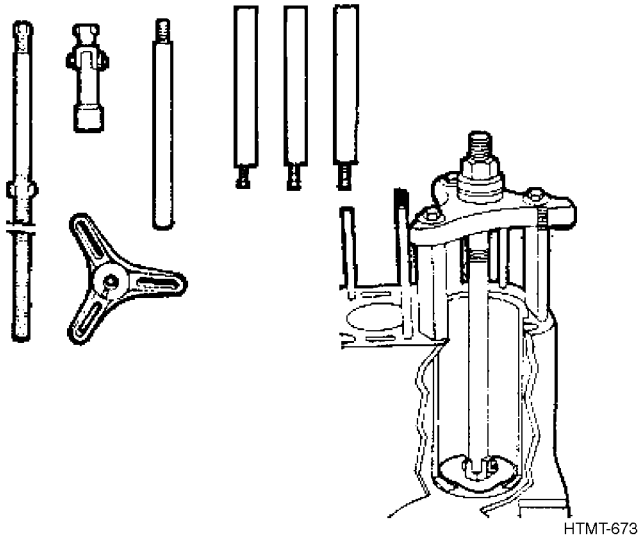

The universal cylinder sleeve is used to pull cylinder sleeves from engine blocks. It is adjustable to provide clearance regardless of the position of the cylinder studs and to simplify centering the tool over the bore. This puller is used in conjunction with four adapter plates supplied with the puller. The combination is capable of pulling cylinder sleeves 4-1/4, 4-1/2, 4-3/4, and 5-3/4 inches in diameter.

41.2.11 Slide Hammer Puller.

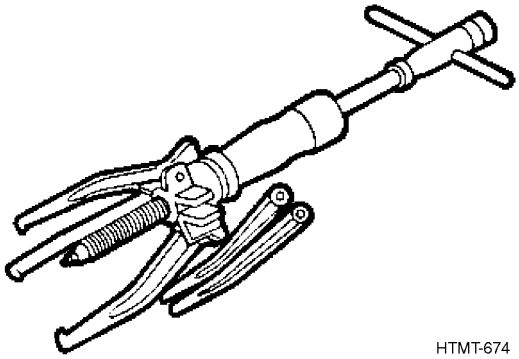

The slide hammer puller set is a universal-type puller equipped with a two and three-way yoke, three medium jaws for outside pulls and two jaws for inside pulling. The small jaws can be inserted through a 1/2-inch opening. The capacity of the medium jaws is 6-1/4 inches. The slide hammer puller is also equipped with a locking feature which holds the jaws open or locks them on the work.

41.2.12 Cotter Pin Puller.

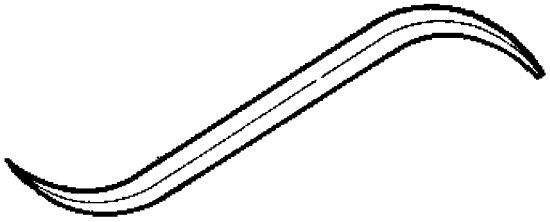

A cotter pin puller is an S-shaped tool used to install or to remove cotter pins. One end is used to insert through the cotter pins for extracting. The other end is used for spreading the cotter pin. The shank is beveled square for easy handling and for a firm grip. This type is seven inches long.

41.3 USING A GEAR AND BEARING PULLER.

CAUTION

When pulling a sheave or bearing from a shaft with an internally threaded hole, ensure that the tip does not enter threaded portion of shaft. This can be done by using proper adapter.

1. Check all gripping edges end threads of a puller for damage before using it.

2. Place the puller (1) firmly in position and secure it.

3. Use the proper size wrench for turning the pressure screw or nut (2) to avoid rounding the corners of the nut or of the screw head.

WARNING

Turn the pressure screw or nut slowly to prevent injury as the gear bearing is released.

4. Turn the pressure screw or nut slowly in a clockwise direction until the gear bearing is removed.

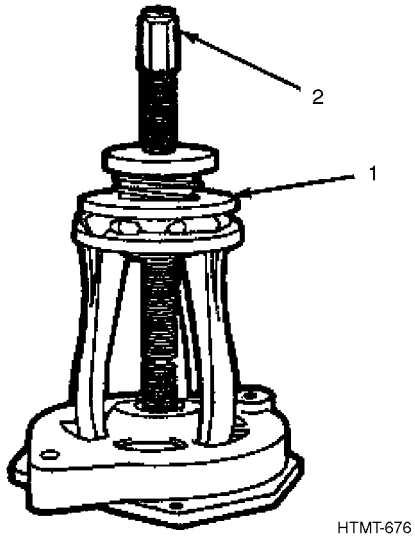

41.4 USING A SLIDE HAMMER PULLER SET.

1. Check to make sure that you have all parts before starting the process. Make sure the threads are clean and will move freely.

2. Lock the jaws (1) on the gear with the locking feature and slide the hammer handle (2) up the shaft in the direction of the pull.

WARNING

Do not slide the handle too rapidly, the gear may fly off and cause injury.

3. Slide the handle in a series of slides until the gear is loose or comes off.

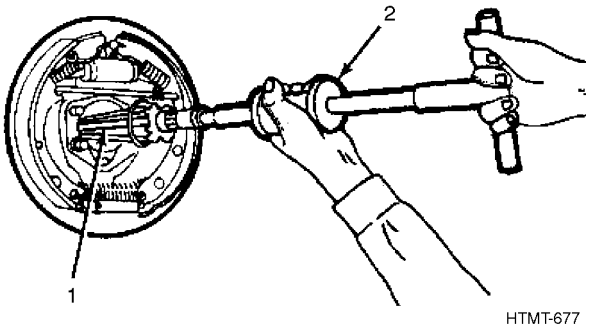

41.5 CARE OF PULLERS.

1. Keep pullers clean at all times.

2. Do not grease or oil the gripping edges. This will cause the tool to slip.

3. Clean all the tools after use and store so the threads will not become damaged.

4. Make certain that attachments and adapters are stored with the basic puller and that they do not become separated.

5. Oil pullers after use and wipe clean before using again.

6. When storing for long periods, apply a coat of rust-preventive compound on the tools and store them in a dry place.

CHAPTER 42
BARS

42.1 HOW TO CHOOSE AND USE THEM.

Types and Uses, Paragraph 42.2, provides you with a list of some of the types of bars. These pages should help you select the right bar to do the job. Using the Combination Bar, Paragraph 42.4, tells you how to use the bar to perform the desired function. Care of Bars, Paragraph 42.5, tells you how to care for the item.

HTMT-678

42.2 TYPES AND USES.

Bars are steel tools used to lift and move heavy objects and to pry where leverage is needed. They can also be used to remove nails and spikes, and to loosen hard soil for digging. The most commonly used types of bars are the wrecking bar, crowbar, pinch bar, and combination pry bar. These bars range from 12 inches to 72 inches in length, depending upon their design and the purpose for which they are used.

HTMT-679

42.2.1 Wrecking Bar.

HTMT-680

The wrecking bar is used to pull large nails or spikes, to open heavy crates, and to do wrecking work.

42.2.2 Crowbar.

HTMT-681

The crowbar is used for heavy prying and for moving heavy timbers and other large objects short distances. It can also be used for loosening rock formations, as a lever for moving rails, and for breaking up hard earth when digging. In moving heavy objects or prying, it should be used in a position where the weight of the user's body is exerted downward on the long section of the lever. When possible use a block or other object as a fulcrum behind the bar, near the spot where the bar's point is wedged under the object to be moved.

42.2.3 Pinch Bar.

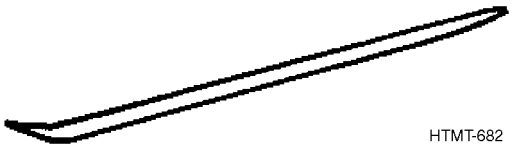

HTMT-682

The pinch bar is used for light ripping and prying jobs.

42.2.4 Combination Bar.

HTMT-683

The combination pry bar is an all-purpose combination pry and scrape bar for rugged heavy-duty service. It is used to pry, pull, cut, scrape, lift, and pound nails. The slim tapered blades are easily inserted for prying and lifting. It also has beveled nail slots.

42.3 SAFETY.

1. Wrecking bars are exceptionally heavy, and care must be taken to keep them from falling and striking someone.

2. When using bars for prying, make sure the bar does not slip and cause personal injury.

3. Do not use bars for extra heavy work, since they will bend and may cause injury.

42.4 USING THE COMBINATION BAR.

WARNING

Use care in using the combination bar to avoid slippage and personal injury.

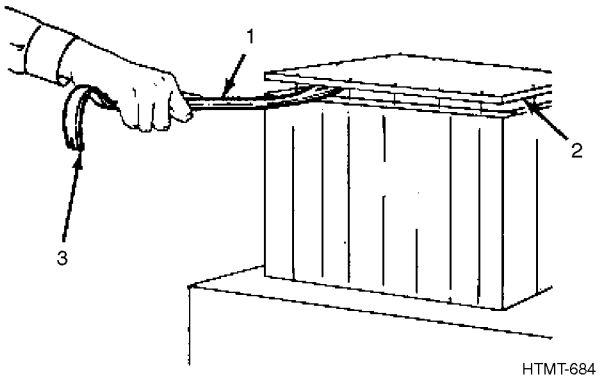

1. Insert the long tapered blade (1) between boards (2) to be removed or ripped. Then exert leverage on the short hooked blade (3) of the bar to pry the boards loose.

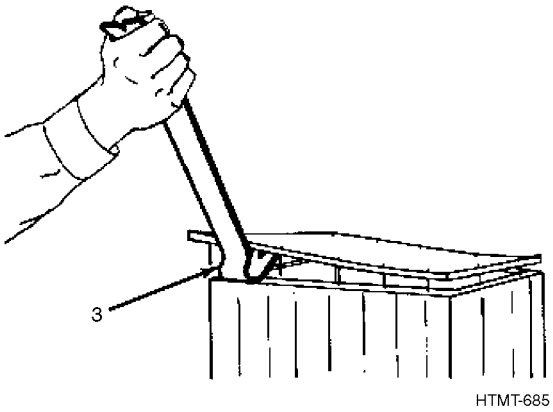

2. Insert the short hooked blade (3) between the boards if greater leverage is required.

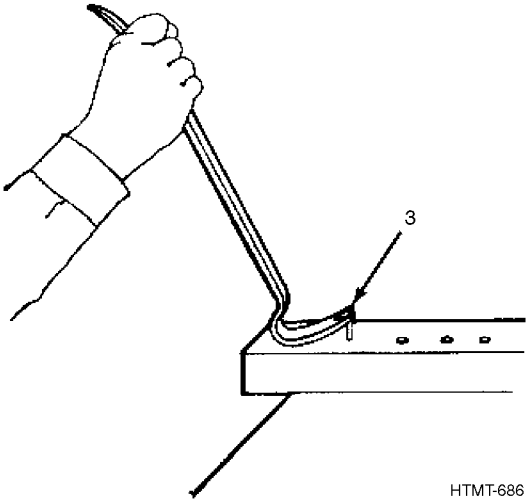

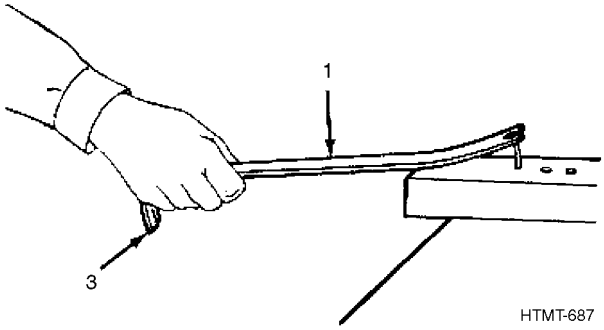

3. To remove nails, use the short hooked blade (3) nail slot to remove a nail that is almost completely driven home. Pull the nail approximately half-way out. Then switch to the long tapered blade (1) nail slot to completely remove the nail.

42.5 CARE OF BARS.

CAUTION

When grinding, take care to cool the end being ground by dipping it in water frequently, so tempering is not lost.

1. Bars require little maintenance. They should be thoroughly cleaned after use when they accumulate dirt and grease.

2. They should be covered with light oil before storing in a dry place.

3. The ends of the bars should be kept in shape by filing or grinding to their original shape, because a dull chisel end or claw end makes using the bar more difficult.

CHAPTER 43
MATTOCKS

43.1 HOW TO CHOOSE AND USE THEM.

Types and Uses, Paragraph 43.2, provides you with a list of some of the types of mattocks. These pages should help you select the right mattock to do the job. Using the Mattock, Paragraph 43.4, tells you how to use the mattock to perform the desired function. Care of Mattocks, Paragraph 43.5, tells you how to care for the item.

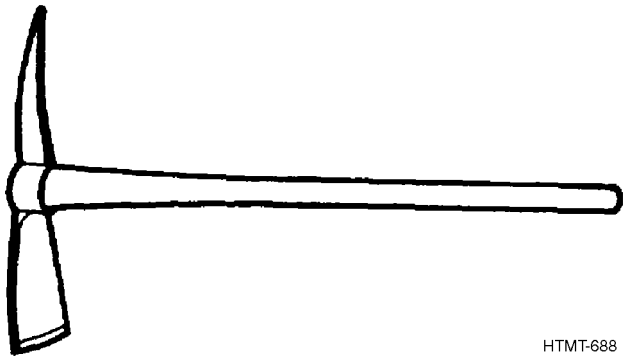

43.2 TYPES AND USES.

43.2.1 Single-Bevel and Double-Bevel. The mattock is designed for digging and cutting operations. The mattock can have a single or double-beveled head. However, the single-beveled mattock can be combined with other digging tools to perform a variety of functions. For example, the “pick-mattock” is a combination of the single-beveled mattock and pick.

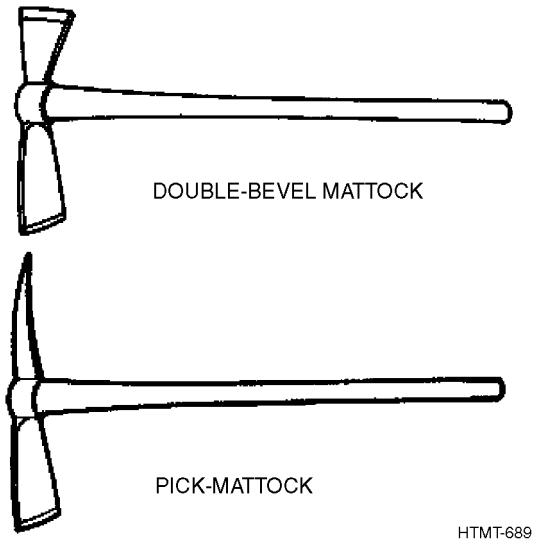

43.3 SAFETY.

1. When using a mattock, it is important to have a firm footing and correct posture to prevent the mattock from glancing and striking the feet or legs if the mark is missed.

2. Do not swing a mattock until you are sure that no one will be endangered by the swing, a possible. loose head, or glancing of the tool.

43.4 USING THE MATTOCK.

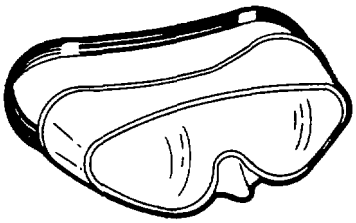

WARNING

Wear eye protection.

1. Distribute body weight equally on both feet. The knees should be set but not tense. The feet should be spread apart at a comfortable distance. The body should be relaxed and free to swing and bend from the hips.

HTMT-690

2. When practicing using the mattock, swing with either the right or the left band leading. When your position becomes tiring, reverse your hands on the handle of the mattock.

3. With the right hand leading, the left foot should be brought slightly toward the work. To start the swing, hold the handle at the end with the left hand and near the center with the right hand. Raise the mattock over the right shoulder. Swing the mattock down toward the work, allowing the right hand to slide back along the handle toward the left hand so that at the finish of the swing, the hands are close together.

4. With the left hand in the center of the handle, the mattock is swung in the same manner, except that the positions are reversed.

5. Light swings are accomplished with wrist motion only, allowing the head of the mattock to do the work.

6. Use the wrists, forearms, and shoulders for heavy swings.

CAUTION

Slight prying may be done with the mattock. However, this must be done cautiously to prevent breaking the wood handle.

HTMT-691

43.5 CARE OF MATTOCKS.

1. Clean the mattock thoroughly after use and before short or long-term storage.

2. Store the mattock so that the head will not be struck against metal or other hard surfaces. The mattock should be placed on its head against a wall or hung on a rack for storage. Coat the head with oil.

3. For long-term storage, coat the head with a rust-preventive compound and store in a dry place in a rack or box with the cutting edges protected.

WARNING

Linseed oil is a flammable liquid. To avoid personal injury, properly dispose of all cleaning rags in non-combustible containers.

4. The raw wood handles of mattocks should be rubbed thoroughly (preferably prior to use) with a cloth soaked in boiled linseed oil. This will prevent drying, checking, and moisture penetration.

CHAPTER 44
GASKET CUTTERS

44.1 HOW TO CHOOSE AND USE THEM.

Types and Uses, Paragraph 44.2, provides you with a list of some of the types of gasket cutters. These pages should help you select the right cutter to do the job. Using the Gasket Cutter, Paragraph 44.3, tells you how to use the gasket cutter to perform the desired function. Care of Gasket Cutters, Paragraph 44.4, tells you how to care for the item.

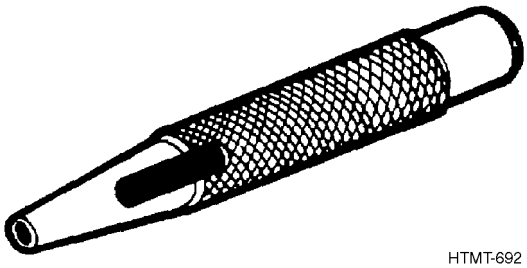

HTMT-692

44.2 TYPES AND USES.

44.2.1 Circle Gasket Cutter.

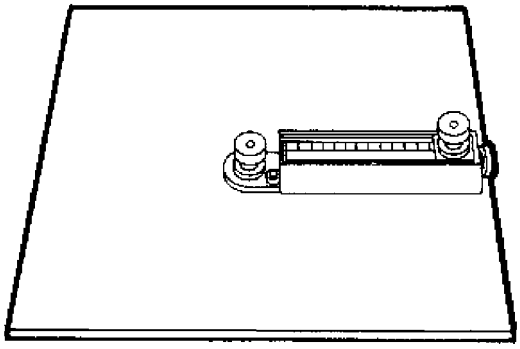

HTMT-693

The compass-style circle gasket cutter cuts gaskets from 4-inch diameters through 20-inch diameters. It cuts leather, paper, plastic, rubber, sheet lead, or thin wood. It has an aluminum frame with a graduated scale, steel pivot pin, and tempered tool steel knives. It requires a knurled thumb screw adjustment to change diameters.

44.2.2 Bit Brace Circle Gasket Cutter.

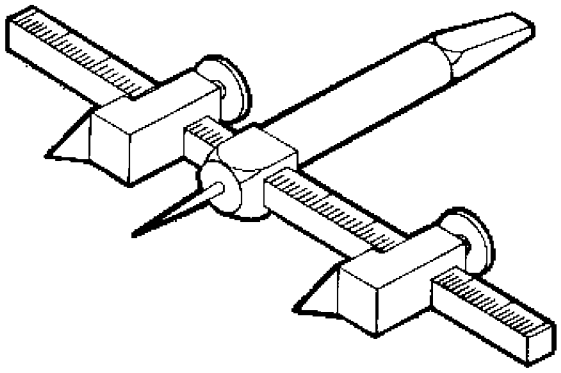

HTMT-694

The bit brace circle gasket cutter adjusts from 1 to 5-1/2 inches in diameter. It cuts metal, plastic, wood, hardwood and other materials. It has a tapered square shank to fit a bit brace. It comes with a 3/16-inch tool steel bit, 1/4-inch pilot drill, and a hex wrench for easy adjustment.

44.2.3 Hollow Gasket Cutter.

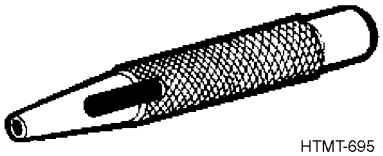

HTMT-695

The hollow gasket cutter is also known as a hollow punch. It is extremely serviceable for cutting soft materials. It comes in a set with a mandrel. The sizes are 1/4, 5/16, 3/8, 7/16, 1/2, 9/16, and 5/8 inch. The set will withstand unlimited use if a hardwood block is used under the gasket material when cutting gaskets. They are not designed for cutting metal or cutting against a hard surface. Other individual hollow gasket cutters are also available.

44.2.4 Heavy Duty Bench Mount Gasket Cutter.

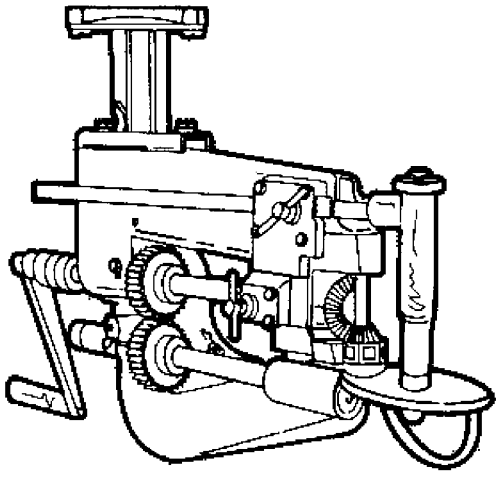

The bench mount gasket cutter is used for heavy duty jobs requiring gaskets cut from the heaviest of materials.

44.3 USING THE GASKET CUTTER.

Below are examples of how several of the gasket cutters in this chapter can be used.

44.3.1 Using a Circle Gasket Cutter.

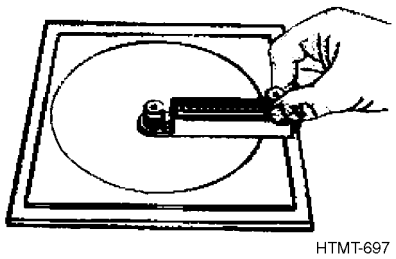

Cutting circular gasket compass-style.

44.3.2 Using a Bit Brace Circle Gasket Cutter.

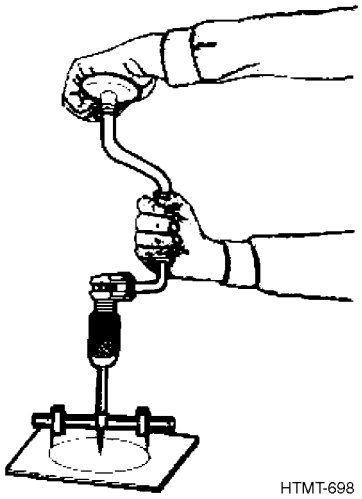

Cutting smaller circular gasket with a bit brace.

44.3.3 Using a Hollow Gasket Cutter.

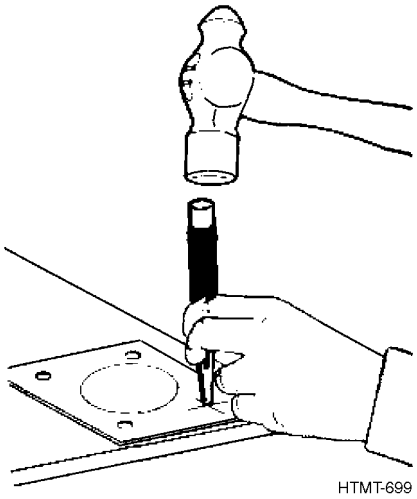

Cutting small holes in gasket with a hollow punch.

44.4 CARE OF GASKET CUTTERS.

1. After using a gasket cutter, wipe it clean and apply a thin film of oil to prevent rusting.

2. Carefully place the gasket cutter on a shelf, rack or other suitable place to avoid damaging its cutting edges.

3. For long-term storage, coat the gasket cutter with rust-preventive compound. Protect the cutting edges and store carefully in a dry place.

CHAPTER 45
CHOPPING TOOLS

45.1 HOW TO CHOOSE AND USE THEM.

Types and Uses, Paragraph 45.2, provides you with a list of some of the types of chopping tools. These pages should help you select the right chopping tool to do the job. Using, Paragraph 45.4, tells you how to use chopping tools to perform the desired function. Care of Chopping Tools, Paragraph 45.7, tells you how to care for the item.

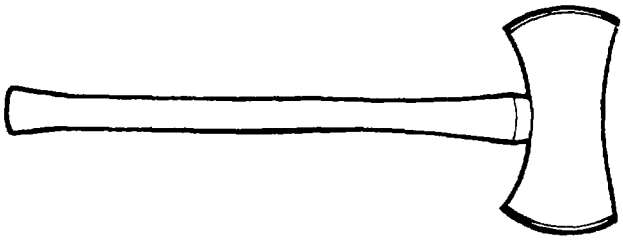

HTMT-700

45.2 TYPES AND USES.

45.2.1 Axes. Axes are cutting tools used for the cutting down of trees and for the chopping and splitting of wood. They may be either single or double-edged. Single-bit, double-bit, and crash axes are the most common types. Sizes of axes vary depending upon their design and purpose.

45.2.1.1 Single-Bit Ax.

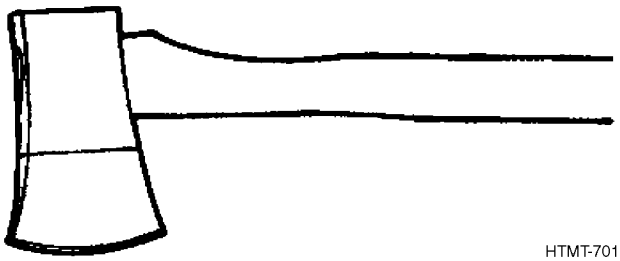

HTMT-701

The single-bit ax is used to cut down or prune trees. It can also be used to cut or trim logs and heavy brush, or to split and cut wood. This type ax has a steel head attached by wedges to a long, slightly curved handle. The head has a flat face at one end. At the other end is the cutting edge or "bit."

45.2.1.2 Double-Bit Ax.

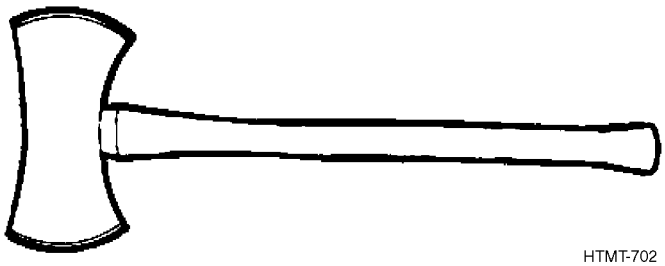

HTMT-702

The double-bit ax is used for the chopping down and the lopping and topping of trees. The double-bit ax has a wedge-type head with two cutting edges.

45.2.1.3 Crash Ax.

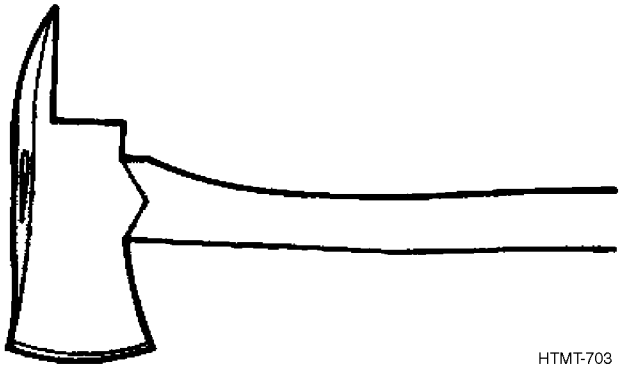

HTMT-703

The crash ax, or fireman's ax, is used by emergency personnel to gain quick access to a given area. This ax has a steel head with a cutting blade or bit at one end, and a spike-like extension at the other.

45.2.2 Hatchets.

45.2.2.1 Half-Hatchet.

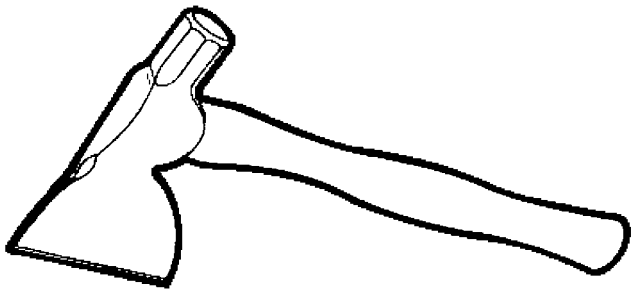

HTMT-704

The half-hatchet, commonly called a hatchet, has a steel head fastened by wedges to a short wooden handle. The head always has a straight front edge and a round rear shoulder. The other end of the head may vary in shape depending on the design and use.

45.2.3 Adz.

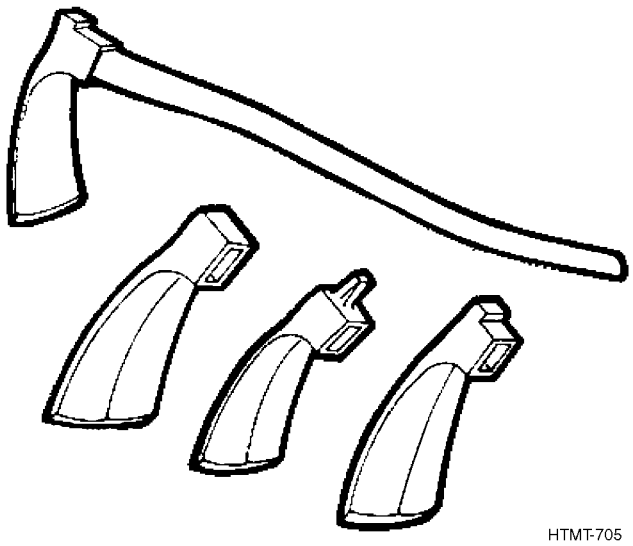

The adz is a chopping tool used for chopping and smoothing lumber or logs where a great deal of wood or bark is to be removed. The adz is a form of ax where the edge of the blade is at a right angle to the handle. It has a curved steel head attached to a curved handle.

45.2.4 Timber Wedges.

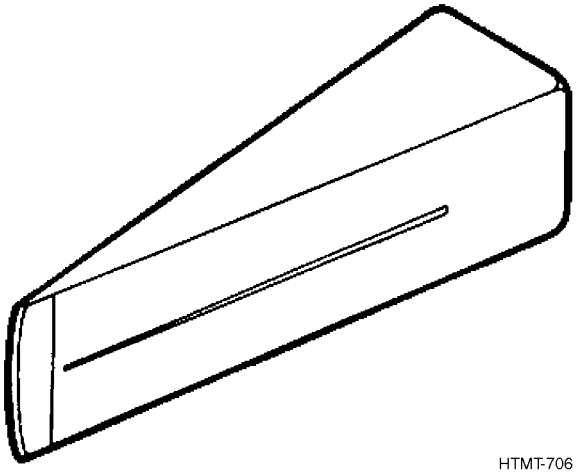

The timber wedge is used with a sledge, primarily to split logs and timber. When sawing timber or thick lumber, it may also be used to spread the cut so the saw will not bind. The timber wedge is a steel tool resembling a slender single-bit ax head. One end is slightly fan-shaped and sharpened to a dull edge. The other end is flat where a sledge can strike when driving the wedge into a log.

45.3 SAFETY.

1. Never use any tool that is defective.
2. Always wear eye protection when working where flying particles may injure the eyes.
3. Do not use dull or defective tools.
4. Before swinging a tool, be sure no one is close enough to be injured.
5. Do not use a tool not designed for the job. It can be dangerous.
6. Before using an ax, clean the work area of material that might deflect the ax blade.
7. Keep arms, legs, and feet out of path of ax.

45.4 USING THE SINGLE-BIT AX.

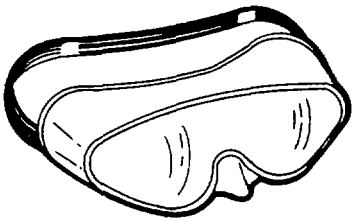

WARNING

Always wear suitable eye protection.

HTMT-707

1. First clear the work area of material that might deflect the ax blade. The user's body weight should be evenly distributed, with knees set, but not tense. The feet should be spread at a comfortable distance to retain balance, while the body should be relaxed and free to swing and bend at the waist.

2. To use the ax, grasp the ax handle with both hands close together near the end of the handle, with the right or leading hand closer to the ax head. The left foot should be closer to the work.

NOTE

Reverse the position of the hands, feet and shoulder if left-handed.

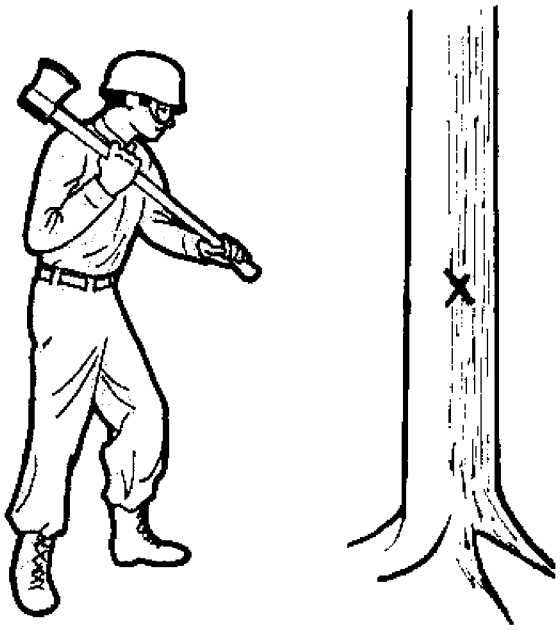

HTMT-708

3. To start the swing, bring the ax back over the right shoulder, bending the elbow as the right hand slides up the handle toward the ax head.

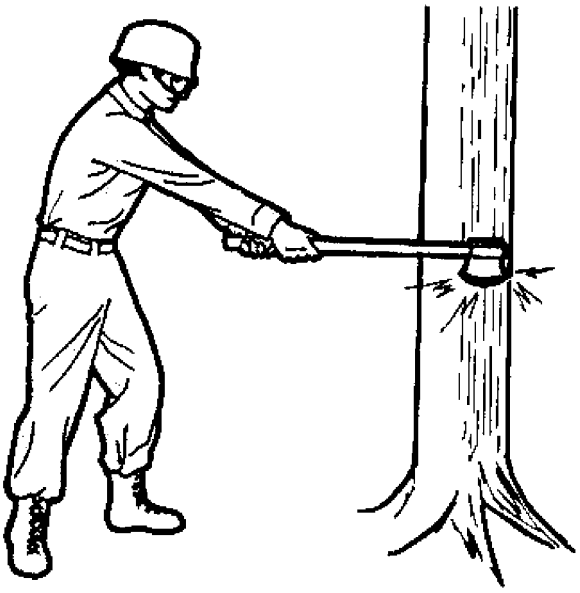

HTMT-709

4. On the downswing, let the right hand slide down the handle, toward the left hand.

5. At the end of the downswing, the right hand will be beside the left hand at the end of the handle.

45.5 USING THE ADZ.

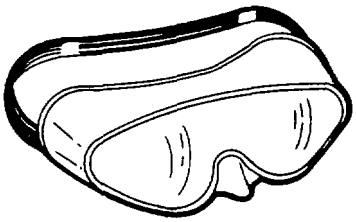

WARNING

Always use suitable eye protection.

1. To use the adz, first clear the work area of branches and debris.

HTMT-710

2. Block the timber to be worked on so it cannot slip, slide, or roll.

3. Straddle the timber and grip the adz handle with both hands. The right hand should be held approximately 12 to 15 inches above the left hand.

HTMT-711

4. Use short, choppy down strokes while keeping the hands in approximately the same position on the handle. The right hand does not slide toward the left hand as in swinging the ax, because the right hand must be in a position to keep control of the adz head at all times. Sliding the right hand to the end of the handle would allow the adz blade face to be deflected toward the user.

NOTE

As wood chips accumulate on the work surface, clear them away to prevent their causing a deflection of the adz blade. Reverse the position of the hands if left-handed.

45.6 USING THE TIMBER WEDGE.

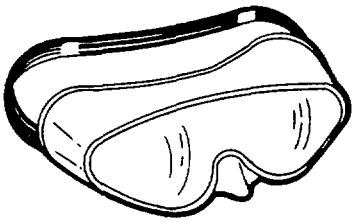

WARNING

Before using always wear suitable eye protection.

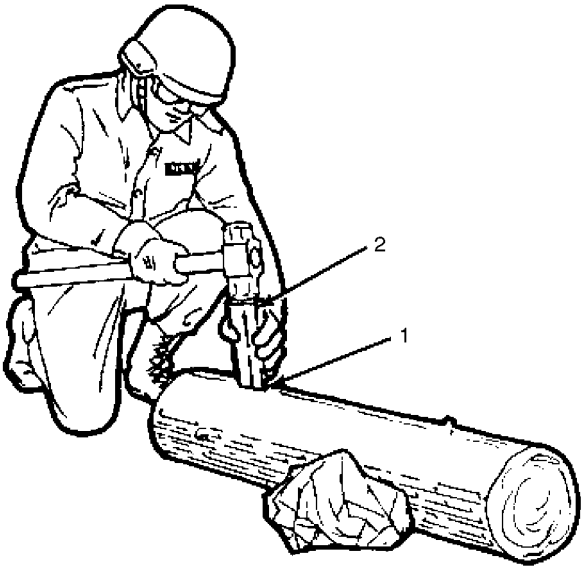

HTMT-712

1. To use the timber wedge, first block the log to be split, or steady it so it cannot roll.

2. With the left hand, hold the wedge's narrow edge (1) on the log where a split is desired.

CAUTION

Do not use a timber wedge that has nicks or burrs, since the rough sections can scratch the hands or can cause chips to break off when struck by sledge.

3. Hold the sledge handle in the right hand, close to its head, and start driving the wedge (2) into the log with a pounding action.

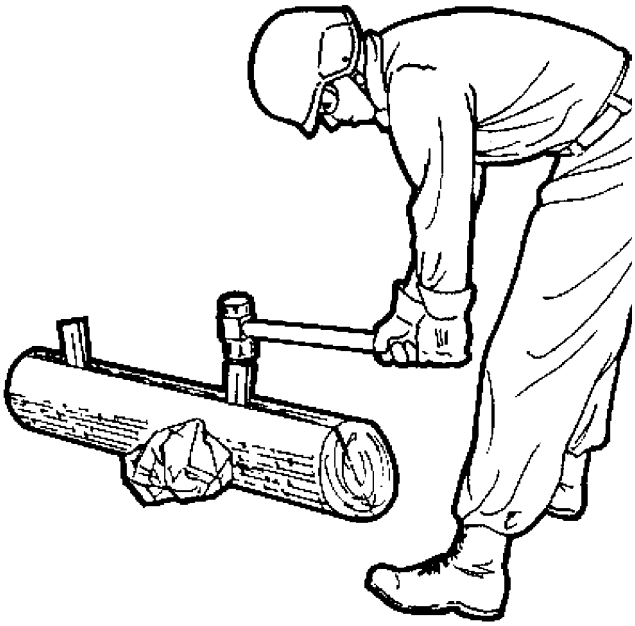

HTMT-713

4. Give the wedge a few blows, then start a second wedge on the line farther along the log and drive it with a few sledge blows.

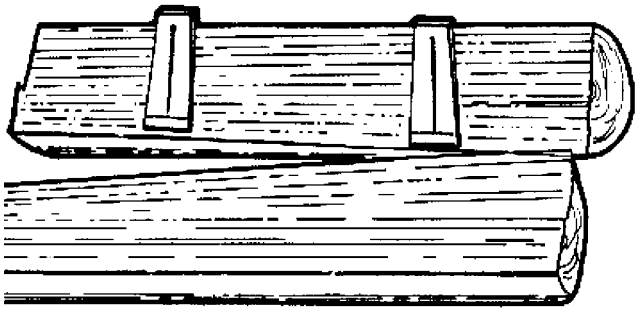

HTMT-714

5. Alternate driving the wedges into the log until log splits. For longer logs, more than two wedges should be used.

NOTE

Reverse the position of the hands if left-handed.

45.7 CARE OF CHOPPING TOOLS.

1. Clean all chopping tools after use.

2. Store tools to protect heads and cutting edges.

3. For prolonged storage, keep tools free of rust by wiping with oil.

4. In very cold weather, never use a chopping tool before the blade is warm. A cold blade is brittle and will break easily.

WARNING

Linseed oil is a flammable liquid. To avoid personal injury, properly dispose of all cleaning rags in non-combustible containers.

5. Promptly replace wooden handles on all chopping tools when needed. When changing handles, apply a light coating of linseed oil.

CHAPTER 46
SAWS

46.1 HOW TO CHOOSE AND USE THEM.

Types and Uses, Paragraph 46.2, provides you with a list of some of the types of saws. These pages should help you select the right saw to do the job. Using, Paragraph 46.4, tells you how to use the saw to perform the desired function. Care of Saws, Paragraph 46.7, tells you how to care for the item.

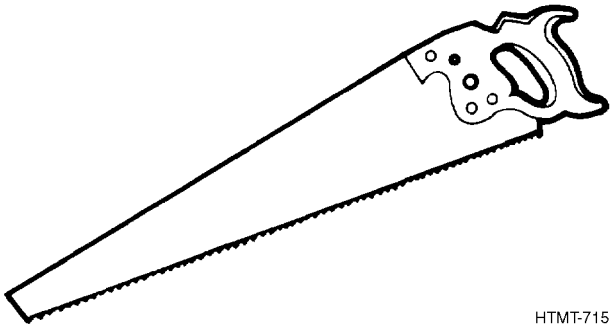

46.2 TYPES AND USES.

Saws are tools with thin, flat steel blades that have a row of spaced notches or “teeth” along the edge. The blade is fastened to a handle. Saws are available in various sizes and designs depending on their use and the material to be cut. The most common types of saws are handsaw, (crosscut and ripsaw), backsaw, one-man crosscut saw, two-man crosscut saw, nested saw (keyhole and compass) and hacksaw.

46.2.1 Handsaw.

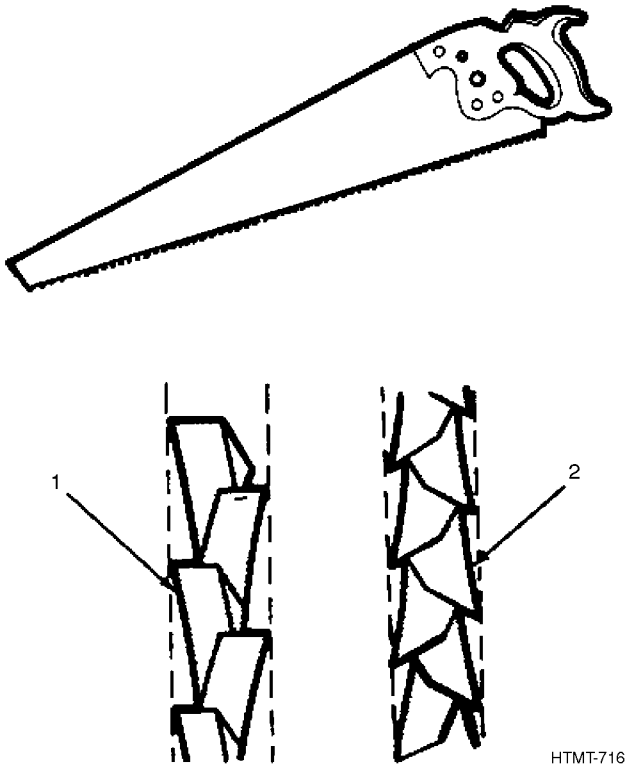

The handsaw consists of a thin flat blade with teeth and a wooden or plastic handle, called the heel, fastened to the end of the blade by screws. There are two categories of handsaws: the ripsaw (1) and the crosscut (2). The ripsaw is designed to cut with the grain of wood, and the crosscut saw is designed to cut against the grain. The handsaw is used in carpentry, rough-out work, and for “finish” hand sawing. Sizes of handsaws vary depending on design and nature of the task.

46.2.2 One-Man Crosscut Saw.

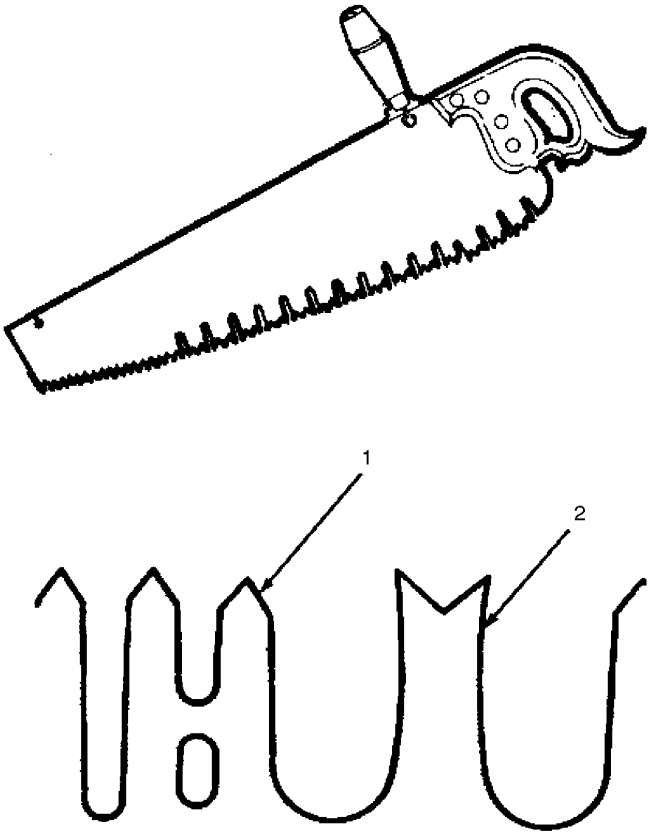

HTMT-717

The one-man crosscut saw is about 36 inches long and has a handle at one end. This type of saw is characterized by a high-grade steel blade with two types of teeth known as “cutters (1) and “rakers” (2). The cutters do the cutting, and the rakers chisel out and remove chips from the cut. It is used for heavy work such as cutting down trees and sawing heavy timbers.

46.2.3 Two-Man Crosscut Saw.

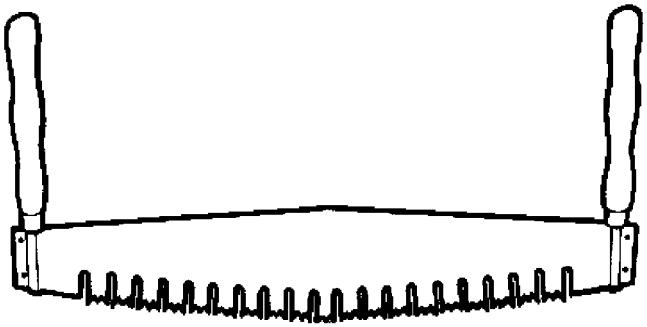

HTMT-718

The two-man crosscut saw is 5 to 6-1/2 feet long with a handle at each end. As with the one-man crosscut saw, it also has a high-grade steel blade with the “cutter” and “raker” teeth arrangement. It is used when two men are required for extra heavy cutting jobs.

46.2.4 Backsaw.

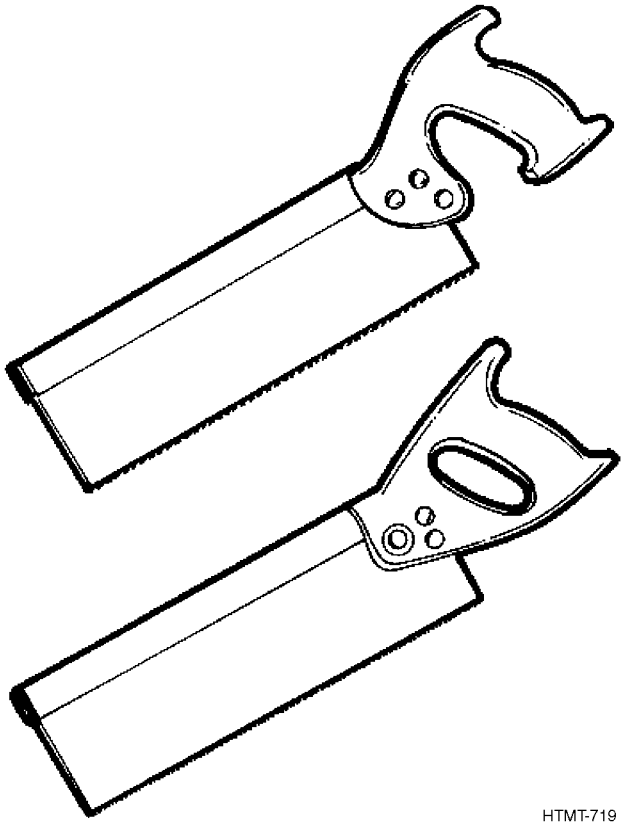

HTMT-719

The backsaw has a straight blade and parallel top and bottom, with a heavy strip of steel or brass wrapped along the back to provide rigidity. The handle is of similar shape to other hand saws except it is usually mounted higher. Backsaws are used for general bench work such as cutting joints and smaller sections of lumber to length. Sizes vary depending on design and nature of work.

46.2.5 Nested Saws.

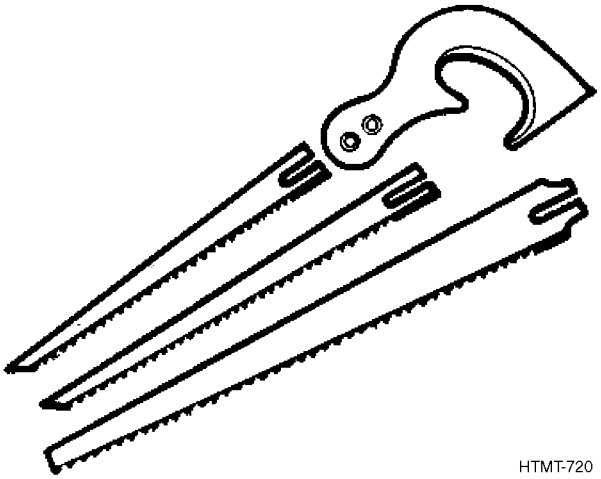

Nested saws consist of a wooden handle to which several different blades can be attached, making up different types of saws such as the keyhole or compass saw. A slotted end at the heel of each blade slips into the pistol-grip type handle where a wingnut fastens it in place. Nested saws are used to cut along curved lines, to start cuts for larger saws, or to make starting saw cuts from drilled holes or small openings. The size of these saws will vary depending on design and nature of use.

46.2.5.1 Keyhole Saw.

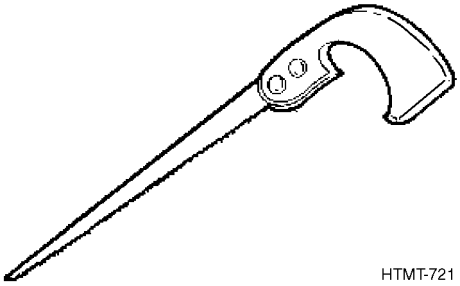

The keyhole saw is the smallest type of nested saw. Its blade has a very narrow point small enough to enter a 1/4-inch hole. It is used for close-quarter work, such as cutting, shaping, or enlarging holes in a board.

46.2.5.2 Compass Saw.

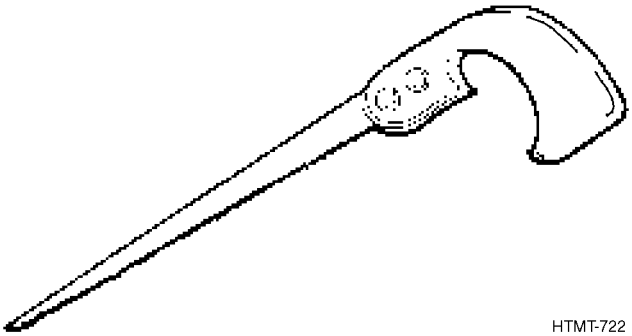

The compass saw is slightly larger than the keyhole saw. The teeth are so arranged that the blade can easily be turned for cutting curves or holes. As with the keyhole saw, the compass saw will vary in size depending on the design and purpose.

46.2.5.3 Hacksaw.

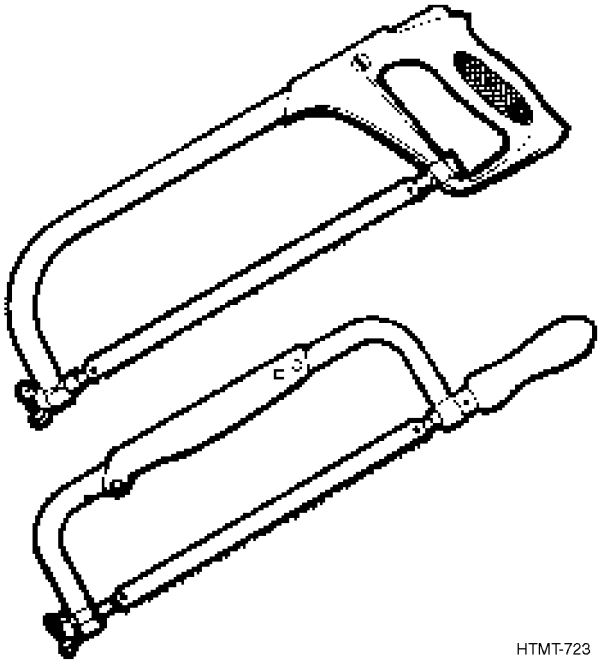

The hacksaw is designed to cut almost any size or shape of metal object. The hacksaw uses two types of blades, hard and flexible. The type of blade used depends on the nature of the task. The blade is held to the saw frame by pins that fit into small holes at each end of the blade. Blade tension is adjusted by a screw and wingnut assembly at either the nose or the handle end of the frame. The hacksaw comes in various designs, depending on the purpose.

46.3 SAFETY.

1. Before using, inspect the tool. Do not use any damaged or broken saw.

2. Store all tools in their proper places when not being used.

3. Wear proper eye protection when using any saw.

4. Do not throw or drop any tools. If a saw is dropped, inspect immediately before reusing.

5. Using clamps or vises, steady or secure any loose material to be cut.

6. Do not allow pointed or edged tools to lie around where they may injure someone.

7. Be careful not to allow the fingers or other parts of body to get in the line of cut.

8. Do not use a tool for any purpose other than that for which it was designed.

46.4 USING THE CROSSCUT SAW.

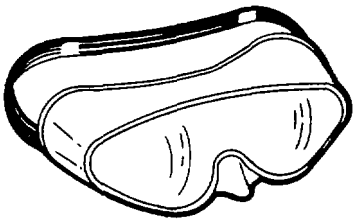

WARNING

Wear eye protection.

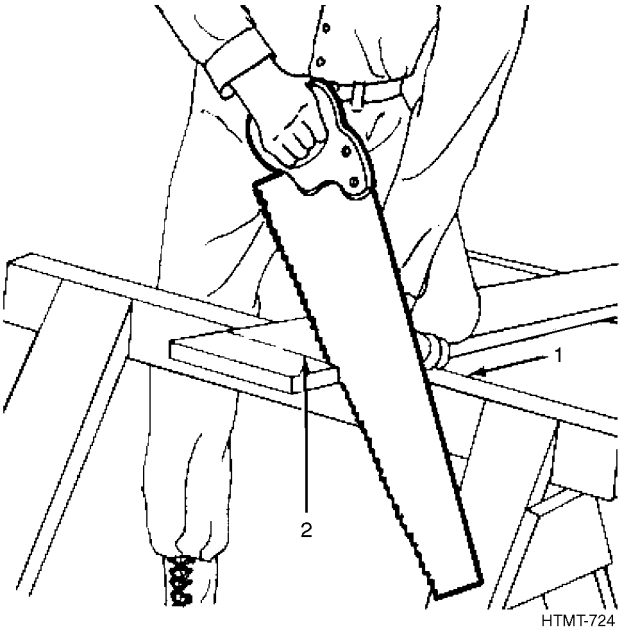

1. In using the crosscut saw, place the work on a level just below the knees. Place one sawhorse, bench or other support (1) fairly close to line of cut (2).

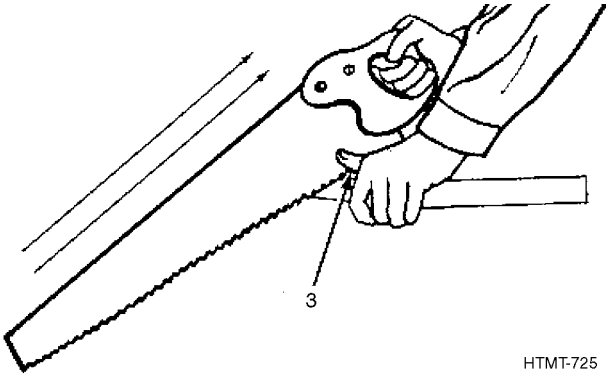

2. To start the cut, place thumb (3) against the side of the saw blade, being careful to hold it well above teeth.

3. Start the cut by drawing back a few inches of teeth at the heel of the saw a few times.

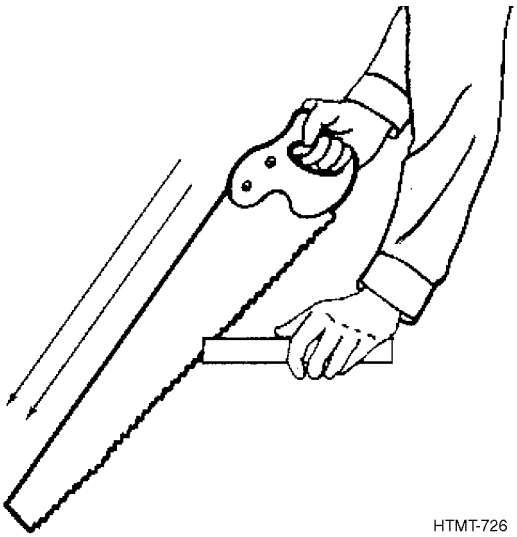

4. At approximately a 45 degree angle, saw only on the downward stroke applying pressure evenly.

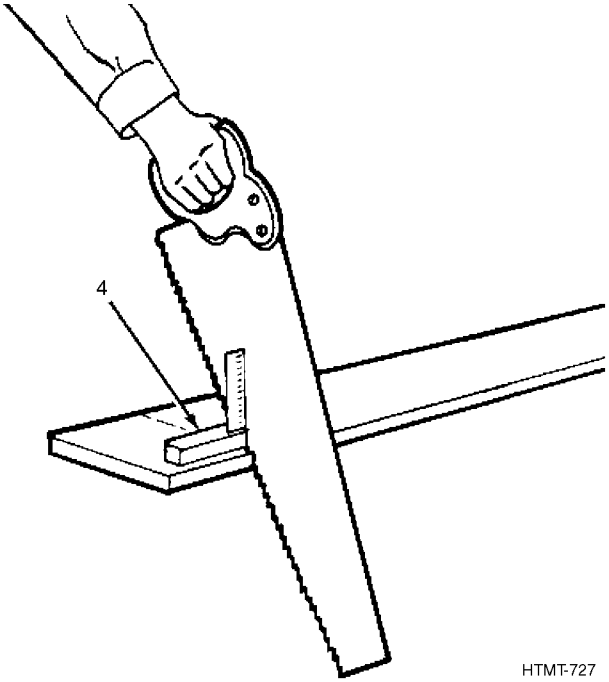

5. Keep the saw blade at a right angle to the work surface by checking the saw position occasionally with a try square (4).

6. When nearing end of cut, hold the waste side of the wood to prevent board breaking off unevenly.

46.5 USING THE KEYHOLE SAW.

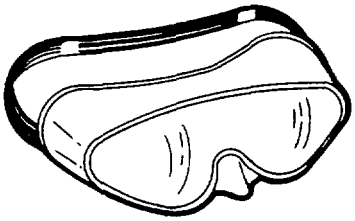

WARNING

Wear proper eye protection to avoid flying wood chips or debris.

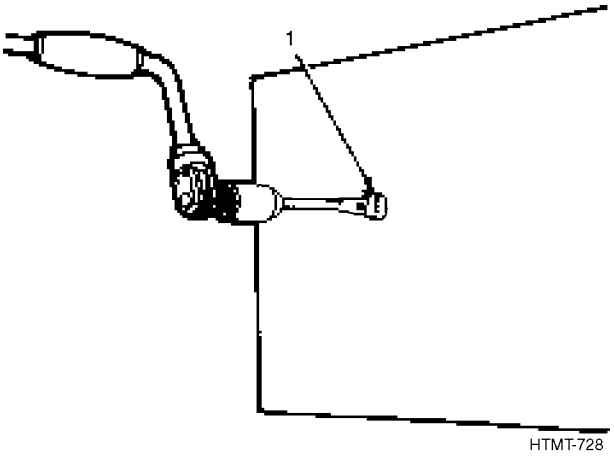

1. To make an inside-out cut, first drill a hole (1) large enough to admit the point of the saw.

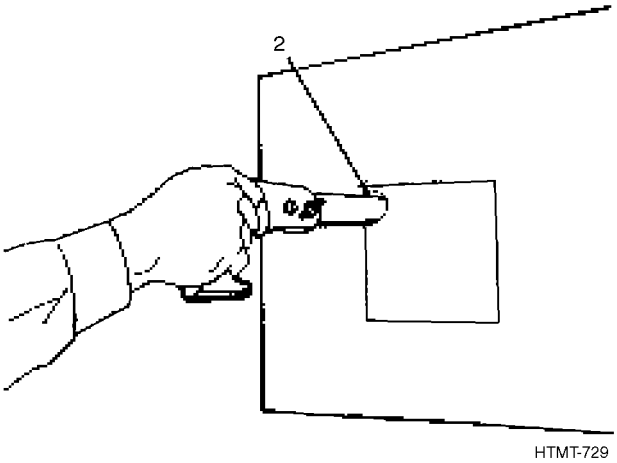

2. Insert the saw blade (2) and start to cut slowly, with a minimum of pressure.

1. Be careful not to twist the blade too sharply, as the narrow blade will easily bend.

46.6 USING THE HACKSAW.

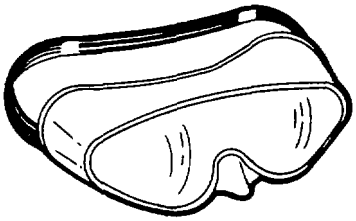

WARNING

Wear protective eyewear to avoid flying metal chips.

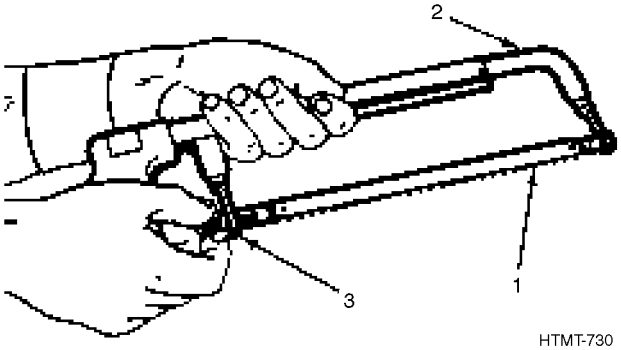

HTMT-730

1. Insert the correct blade (1) in the hacksaw frame (2) and adjust wing nut (3) for proper tension.

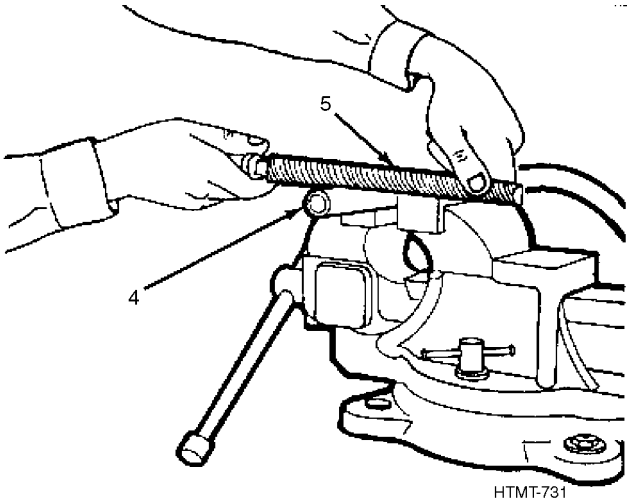

HTMT-731

2. Secure the material (4) to be cut in a vise or other holding device to avoid vibration which may snap the blade.

3. To make an accurate cut, use a file (5) to make a notch for guiding the first strokes of the saw.

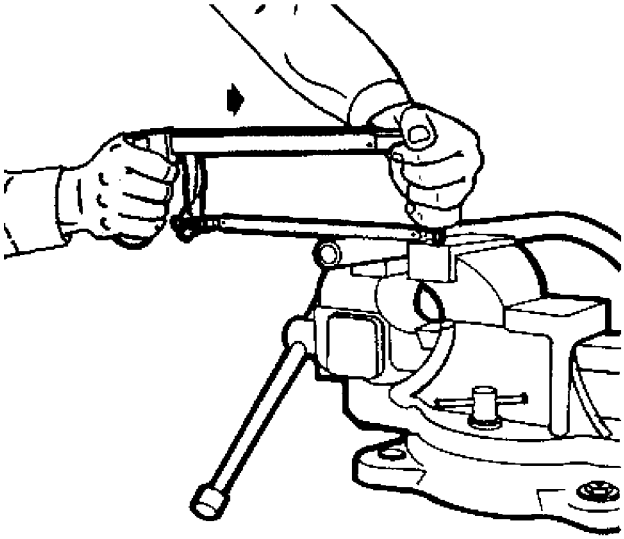

HTMT-732

4. Steady the saw by holding the handle with the right hand and the frame with the left.

5. Hold the blade parallel to the work surface and cut on the push stroke, being careful not to bear down too hard. Draw the blade back using no pressure each time.

6. Saw at a rate not to exceed 40 to 50 strokes per minute.

46.7 CARE OF SAWS.

1. Store blades in a dry place and apply a light coat of oil when not in use. This will keep the blades from rusting.

2. Never use a woodcutting saw to cut through nails or other metal.

3. Between cuts, place saw flat on a work bench or in a spot where teeth cannot be damaged,

4. Avoid placing heavy tools or objects on saw blades as this can result in distortion of the blade.

5. Do not force the saw if it binds. Use a wedge to spread the cut.

6. Replace damaged saw handles with new ones immediately when needed.

7. To keep saw teeth in too condition, touch up the teeth with a file occasionally.

8. Always protect saw blade teeth from coming in contact with metal or other material that may damage them.

CHAPTER 47
BRUSH-CUTTING TOOLS

47.1 HOW TO CHOOSE AND USE THEM.

Types and Uses, Paragraph 47.2, provides you with a list of some of the types of brush-cutting tools. These pages should help you select the right brush-cutting tool to do the job. Using the Brush Hook, Paragraph 47.4, tells you how to use the brush-cutting tools to perform the desired function. Care of Brush-Cutting Tools, Paragraph 47.5, tells you how to care for the item.

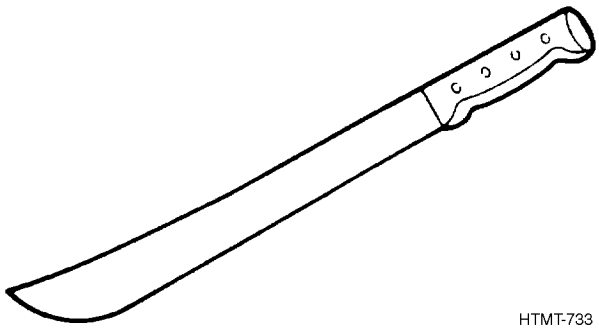

HTMT-733

47.2 TYPES AND USES.

When it is not practical to use an ax or other conventional cutting tool, a brush-cutting tool can be used. Brush-cutting tools are used for cutting underbrush, shrubs, tree branches, vines, and tall grass. Two of the most common brush-cutting tools are the brush hook and the machete. Brush-cutting tools are available in various sizes and designs depending on the nature of use.

47.2.1 Brush Hook.

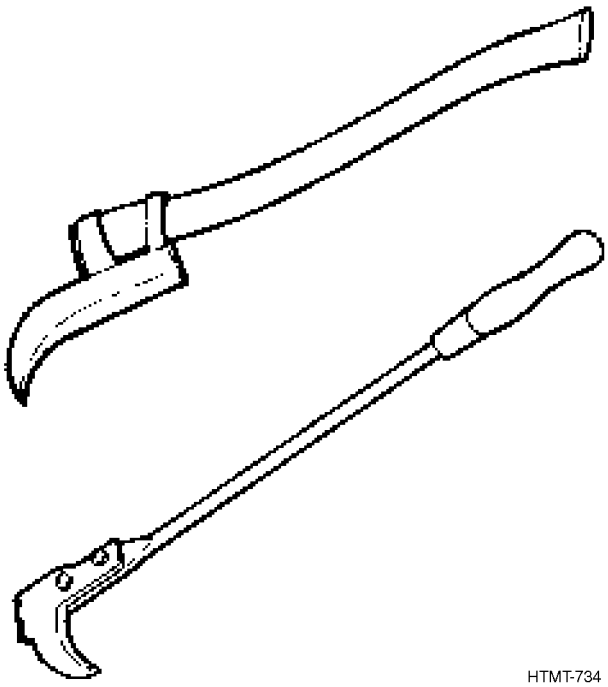

HTMT-734

The brush hook is a hook-shaped steel blade set onto a heavy-duty metal or wooden handle. The inside edge of the hooked blade is sharpened like the cutting edge of an ax blade. The brush hook is used for cutting underbrush, shrubs, or branches. Tool size and design vary according to the task.

47.2.2 Machete.

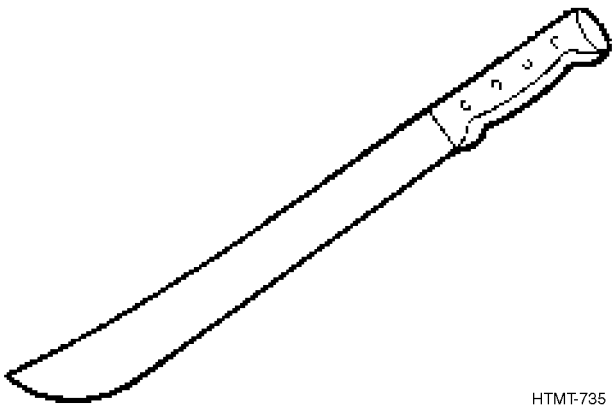

HTMT-735

The machete normally in military use is an 18-inch knife, widest and heaviest at the point of the blade. The blade is attached to a handle shaped to fit the hand. The handle is designed with a slight projection to prevent the machete from

slipping from the hand while being used. The machete is used to cut tall grass, vines, and small brush.

47.3 SAFETY.

1. Always make sure no one is close enough to be injured before swinging the tool.

2. Take care not to allow branches or brush in line of swing to deflect the stroke and cause injury.

3. Do not use a dull or defective tool.

4. Store tools properly when not in use.

47.4 USING THE BRUSH HOOK.

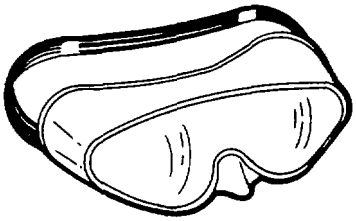

WARNING

Wear proper eye protection when working where flying particles may cause eye injury.

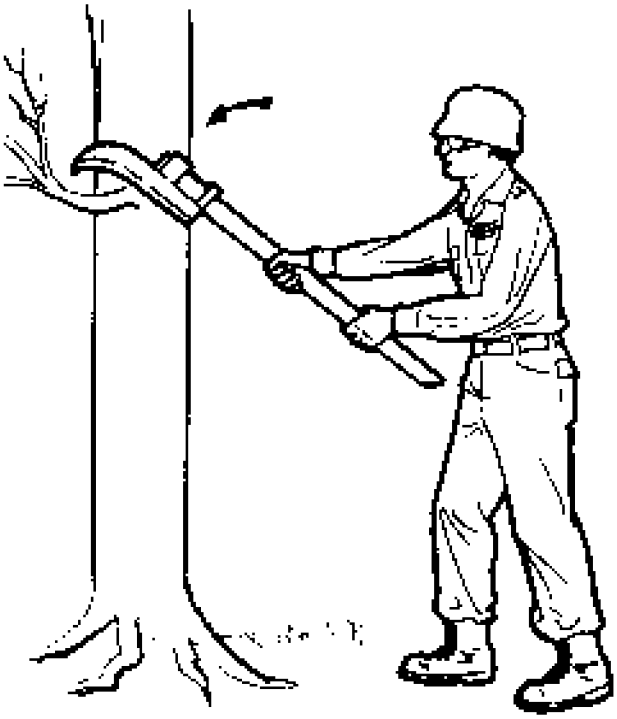

HTMT-736

1. To use the brush hook on a tree branch, lift the curve of the hook above the branch and make short, chopping strokes downward against the surface of the branch.

HTMT-737

2. To cut small brush or bushes, swing the brush hook horizontally. The hooked portion will keep the brush from bouncing away from the cutting edge.

47.5 CARE OF BRUSH-CUTTING TOOLS.

1. Repair all nicks and dulled cutting edges immediately.

2. For prolonged storage, coat metal parts with light oil.

3. Replace defective handle immediately.

CHAPTER 48
TIMBER HANDLING TOOLS

48.1 HOW TO CHOOSE AND USE THEM.

Types and Uses, Paragraph 48.2, provides you with a list of some of the types of timber handling tools. These pages should help you select the right timber handling tool to do the job. Using Timber Handling Tools, Paragraph 48.4, tells you how to use timber handling tools to perform the desired function. Care of Timber Handing Tools, Paragraph 48.5, tells you how to care for the item.

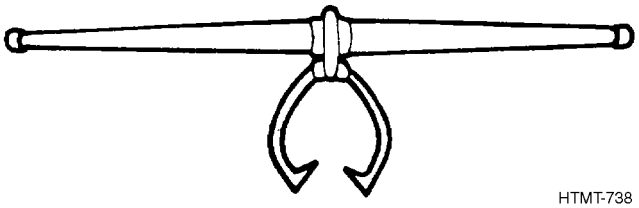

48.2 TYPES AND USES.

Timber handling tools are used for lifting or moving heavy objects such as logs or timbers. The timber carrier and the peavy are the most common examples of timber handling tools.

48.2.1 Timber Carrier.

The timber carrier consists of a pair of large chisel-bill hooks with sharp, pointed ends. These hooks are hung by pivots in the center of a large wooden handle, four feet in length. The timber carrier is used to lift logs and timbers from one lever to another as well as carry them.

48.2.2 Peavy.

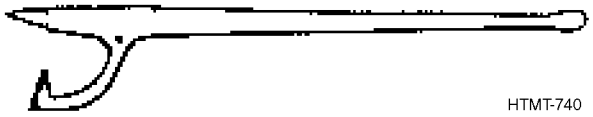

The peavy has a sturdy pole-type wooden handle, about 5 feet in length, that fits into a cylindrical tapered steel socket. The socket has a sharp spiked point. Hinged to the side of the socket is a curved hook that ends in a sharp point. The peavy is used for rolling, turning, and carrying logs and timbers.

48.3 SAFETY.

1. Be sure that all hooks are securely embedded in the log to be carried.

2. Be sure that all personnel at the end of the timber carrier or peavy handles lift and lower the log in unison.

3. Do not toss tools from one location to another, as damage or injury may result.

48.4 USING TIMBER HANDLING TOOLS.

Below are examples of how the timber handling tools in this chapter can be used.

48.4.1 Using a Timber Carrier.

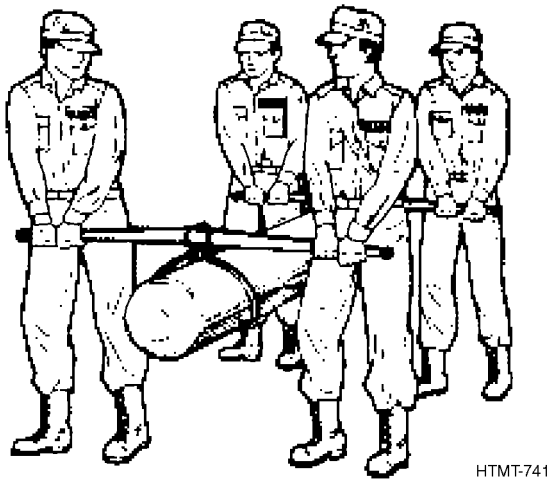

Lifting and moving heavy log with timber carriers.

48.4.2 Using A Peavy.

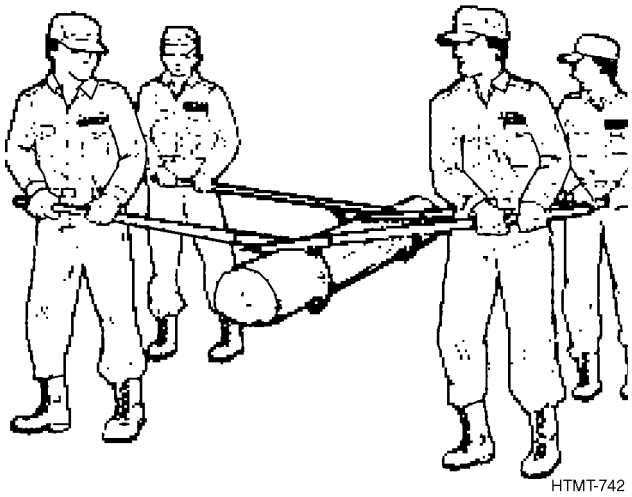

Lifting and moving heavy log with peavies.

48.5 CARE OF TIMBER HANDLING TOOLS.

1. Keep the points on both tools sharp by filing when points are even slightly dulled.

2. Oil the rustable metal portions of these tools on occasion to maintain their good condition.

3. Inspect the pivots on the timber carrier to insure they are tight.

WARNING

Linseed oil is a flammable liquid. To avoid personal injury, properly dispose of all cleaning rags in non-combustible containers.

4. Coat the handles occasionally with linseed oil to prevent drying out.

5. Replace defective or damaged handles immediately.

CHAPTER 49
CLIMBING TOOLS

49.1 HOW TO CHOOSE AND USE THEM.

Types and Uses, Paragraph 49.2, provides you with a list of some of the types of climbing tools. These pages should help you select the right climbing tool to do the job. Using Climbing Tools, Paragraph 49.4, tells you how to use climbing tools to perform the desired function. Care of Climbing Tools, Paragraph 49.5, tells you how to care for the item.

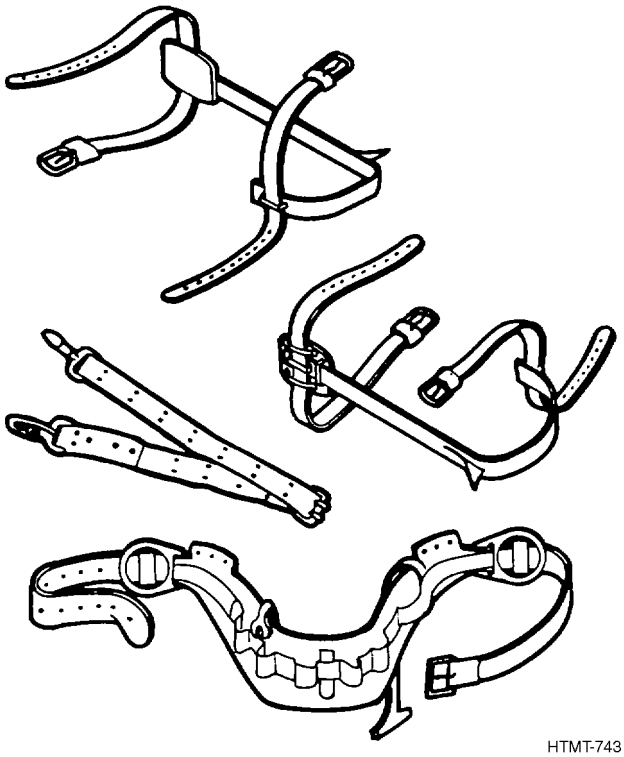

HTMT-743

49.2 TYPES AND USES.

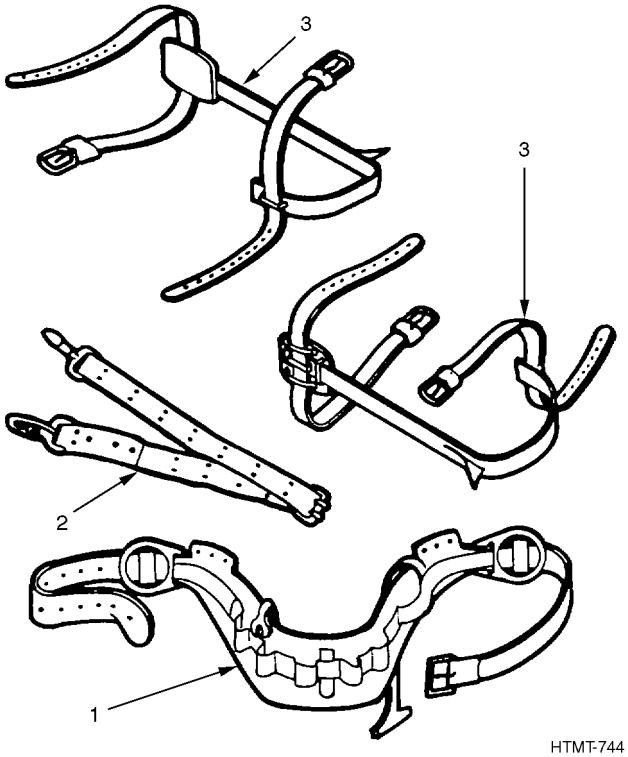

HTMT-744

Climbing tools consist of safety belts (1), safety straps (2), and leg irons with spurs (3). Climbing tools are used for scaling poles and trees, erecting power lines, and for support when clearing and topping trees.

49.2.1 Safety Belt.

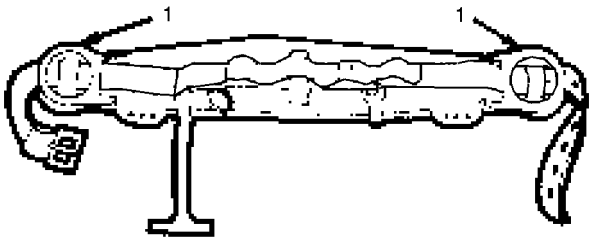

HTMT-745

The safety belt is an adjustable leather belt that has loops in which to carry tools. It also has two D-rings (1) attached to hold the safety strap.

49.2.2 Safety Strap.

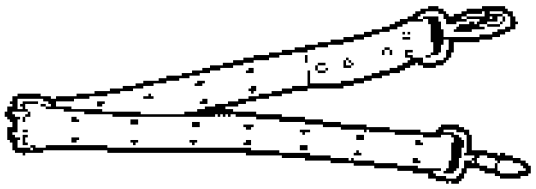

HTMT-746

The safety strap is a leather strap with metal snap hooks on each end. These hooks attach to the D-rings on the safety belt.

49.2.3 Leg Irons.

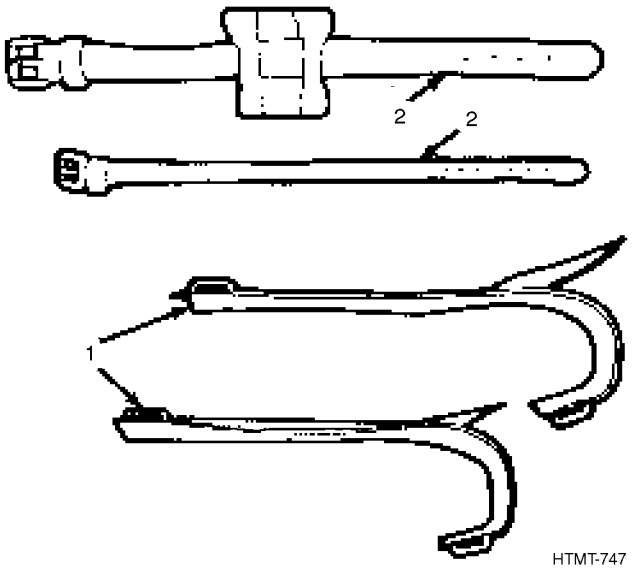

HTMT-747

The leg irons (1) are often called tree and pole climbers. They consist of flattened metal bars, curved at one end to fit under the foot arch, and with the straight portion along the inside of the lower leg. Leather straps (2) secure the irons to the leg and ankle.

49.3 SAFETY.

1. Always inspect climbing tools thoroughly before using them.

2. Never climb without using a safety strap.

3. When climbing, insure that the spurs are securely driven into the wood at each stop.

4. Do not use any belt or strap that is cracked or dried-out.

5. Never use a safety belt or safety strap with broken, bent or badly worn rings or fasteners.

49.4 USING CLIMBING TOOLS.

HTMT-748

1. Secure safety belt (1) around waist and place tools needed in position on belt.

HTMT-749

2. Strap the leg irons (2) to the legs and feet.

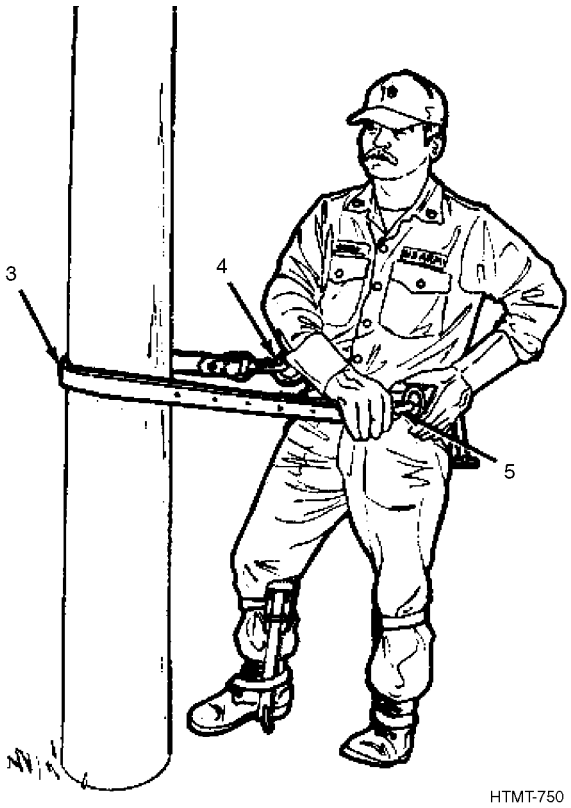

3. Snap the safety strap (3) to one D-ring (4) on the belt, pass the strap around the pole to be climbed, and snap the other end of the safety strap to the other D-ring (5).

WARNING

Before placing your weight on the strap, look to see that the snap and D-ring are properly engaged. Do not rely on the click of the snap-tongue as an indication that the fastening is secure.

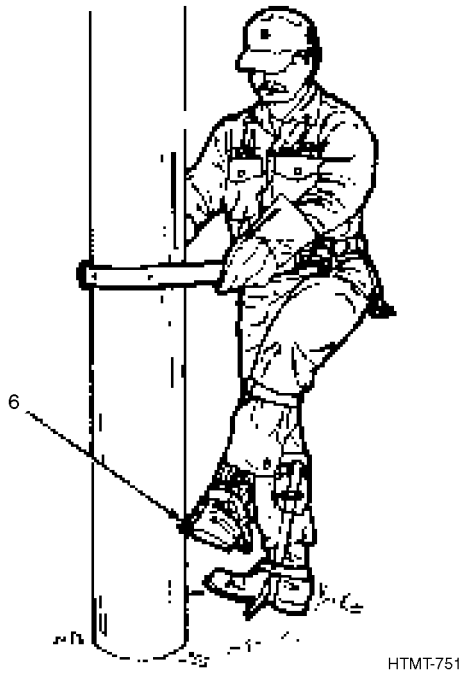

4. Begin the climb by driving one leg iron gaff (6) into the pole so the gaff has a solid hold.

5. Place your weight on the embedded gaff and drive the other gaff into the pole a little higher than the first.

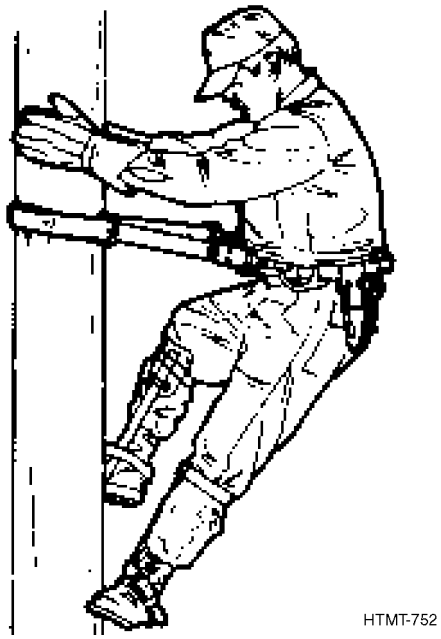

6. Begin the climb using the procedure outlined in step 5.

7. While climbing, lean your body away from the pole to prevent the safety strap from slipping.

8. Keep both hands on the pole until the safety strap needs moving.

9. With both gaffs firmly embedded in the pole, slide the safety strap up the pole.

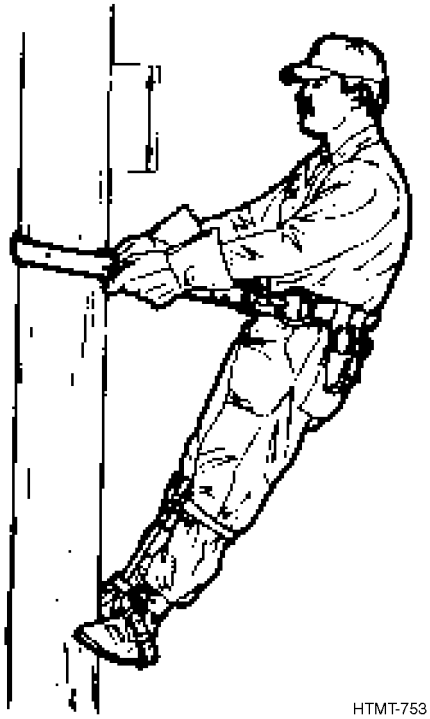

10. When desired height is reached, sink both gaffs into the pole at the same level.

11. Lean back with the safety strap around the pole slightly higher than the safety belt. Hold this position while working.

49.5 CARE OF CLIMBING TOOLS.

1. Keep leather items soft and supple by occasionally applying neat's foot oil.

2. Examine all stitching frequently and repair immediately if needed.

3. Inspect D-rings on the safety belt and snap-hooks of the safety strap frequently.

4. Keep spurs sharp by filing after use.

5. Store leather parts away from extreme heat.

6. Oil all metal parts before storing.

7. Lay metal leg irons away so spur points will not be damaged by coming in contact with other tools.

CHAPTER 50
PLANES

50.1 HOW TO CHOOSE AND USE THEM.

Types and Uses, Paragraph 50.2, provides you with a list of some of the types of planes. These pages should help you select the right plane to do the job. Using, Paragraph 50.4, tells you how to use planes to perform the desired function. Care of Planes, Paragraph 50.6, tells you how to care for the item.

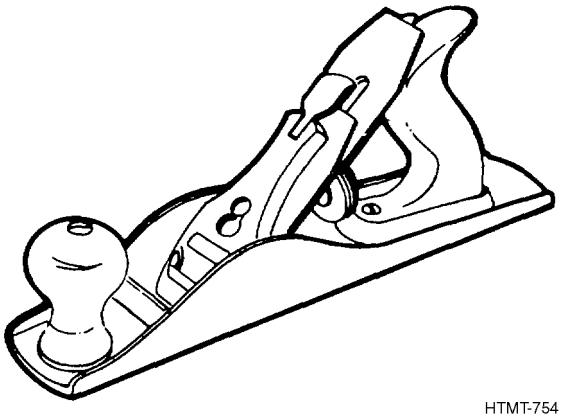

HTMT-754

50.2 TYPES AND USES.

Planes are smoothing tools used to true edges or surfaces of wood. Planes also are used where a finished surface or close-fitting joints are required. Planes vary in size and shape, but each is designed for a specific purpose. The two types of planes most generally used are the block plane and bench plane.

50.2.1 Block Plane.

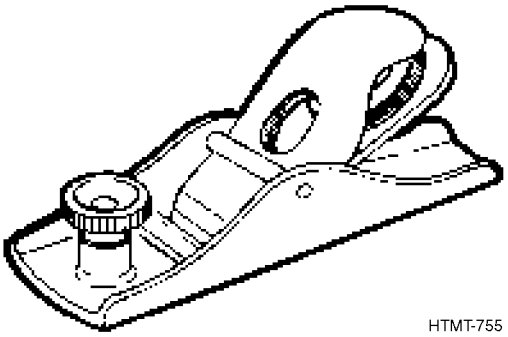

HTMT-755

The block plane is the smallest type of plane. It is available in a variety of patterns and is designed to cut end grain with the cutting blade set between 12 degrees and 20 degrees. Although it can usually be used with one hand, a toe knob is provided when additional pressure is needed.

50.2.2 Bench Plane.

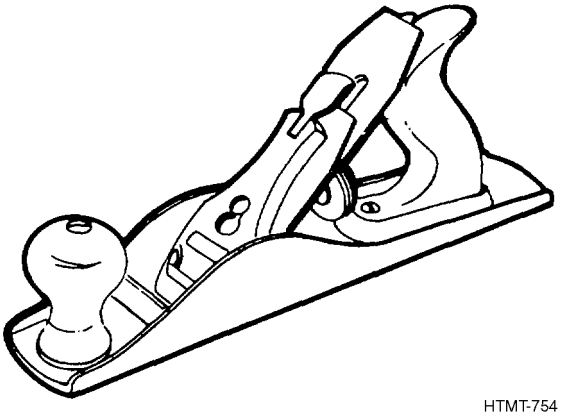

HTMT-754

One of the most common types of bench planes is the jack plane. Like all bench planes, the jack plane is designed for cutting with the grain of the wood. Its cutting blade is set at approximately 45 degrees and is used for all purpose planing or to cut lumber to specified lengths.

50.3 SAFETY.

1. Be careful to plane work smoothly to avoid splinters that may be left to cause injury.

2. Use each plane only for the job it is intended.

3. Keep all cutting tools in good condition.

4. Do not allow tools to lie around work areas in such a position that they may cause injury to others.

5. Before using, inspect the tool for damage or other defects. Repair or replace immediately if required.

50.4 USING THE BLOCK PLANE.

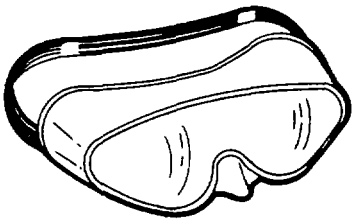

WARNING

Wear eye protection when working where flying particles may cause eye injury.

1. Secure work with a vise or with clamps to prevent slippage.

2. Ensure that the cutting blade is extremely sharp and set to produce a fine cut.

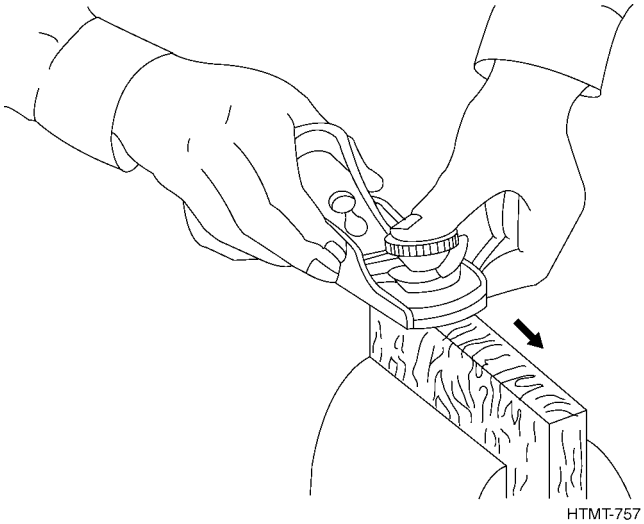

3. Place the plane on the edge of board with the plane pointing across the grain.

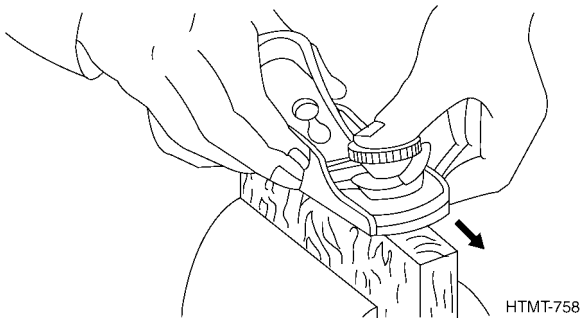

4. Push along the length of the board with a steady, even stroke.

NOTE

Plane from either end to prevent the grain splitting or plane a chamfer on the far end first, as shown.

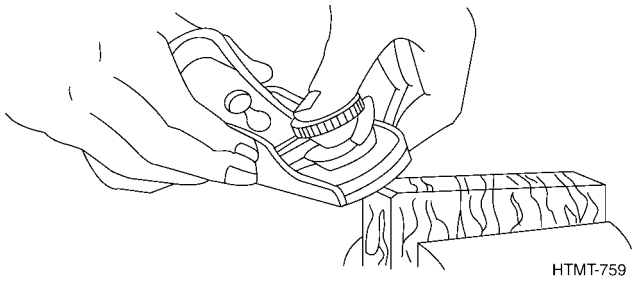

5. Raise the plane from the work after each stroke and return to the starting point.

6. Repeat the process until the task is complete.

50.5 USING THE BENCH PLANE.

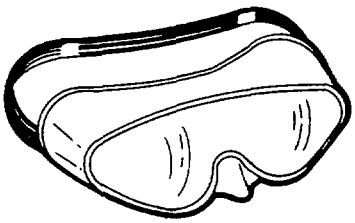

WARNING

Wear eye protection when working where flying particles may cause eye injury.

1. Secure work with a vise or with clamps to prevent slippage.

2. Make sure the plane is sharp and properly adjusted before using.

3. Place the plane on the board with the right hand on the handle and the left hand on the knob.

NOTE

Reverse the position of the hands if left-handed.

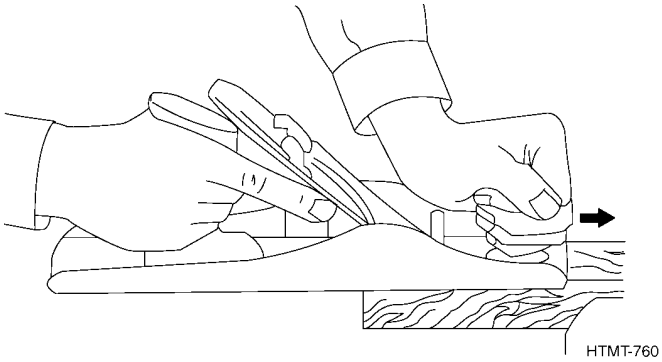

4. Check to insure the plane is placed on the work so that the wood grain points in the direction the plane will go.

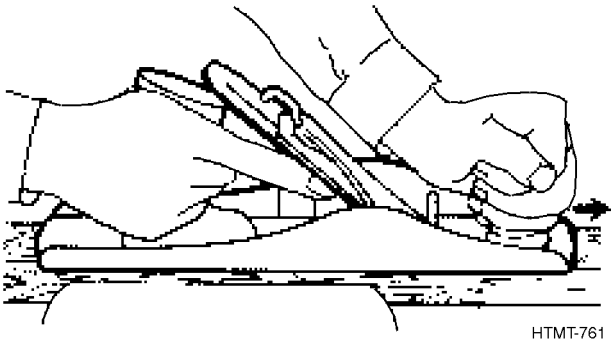

5. Push with a steady, even stroke along the length of the board.

6. Raise the plane and return to the starting point after each stroke.

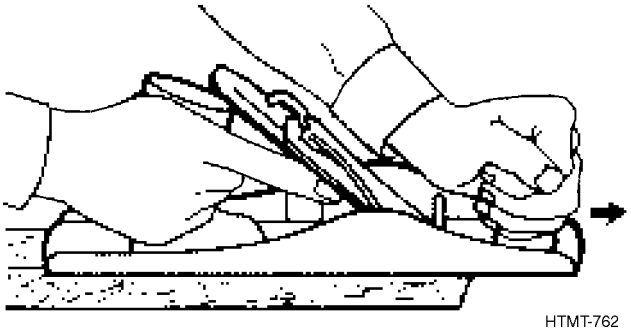

7. Repeat the process until the task is completed.

50.6 CARE OF PLANES.

1. Place the plane on its side to protect cutting edge when not in use.

2. Keep the cutting edge sharp and free of nicks.

3. Cover all metal parts with light oil to prevent rusting.

4. For storage, withdraw the cutting edge into the mouth of the plane.

CHAPTER 51
DIGGING TOOLS

51.1 HOW TO CHOOSE AND USE THEM.

Types and Uses, Paragraph 51.2, provides you with a list of some of the types of digging tools. These pages should help you select the right digging tool to do the job. Using, Paragraph 51.4, tells you how to use digging tools to perform the desired function. Care and Cleaning of Digging Tools, Paragraph 51.7, tells you how to care for the item.

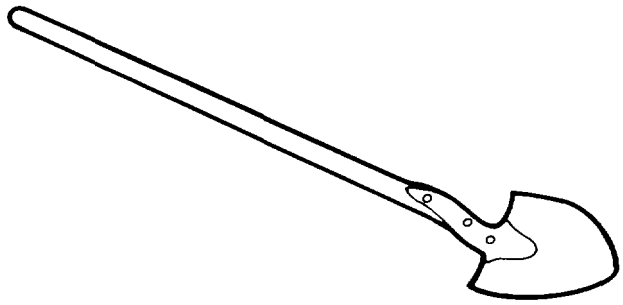

HTMT-763

51.2 TYPES AND USES.

Digging tools are designed for the breaking and digging of soil. Common types of digging tools are the long-handled and D-handled shovel, spade, posthole digger, and auger.

51.2.1 Long-Handled Shovel.

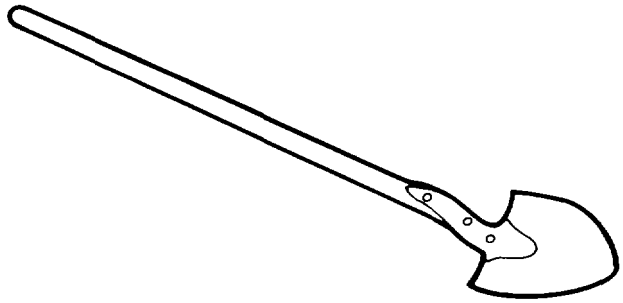

HTMT-763

The long-handled shovel consists of a curved, shaped steel blade attached to a long wooden handle. The lower metal edge of the blade is tapered to help it cut into the ground. The long-handled shovel is used for heavy digging, especially when it is necessary to throw or move dirt a substantial distance.

51.2.2 D-Handled Shovel.

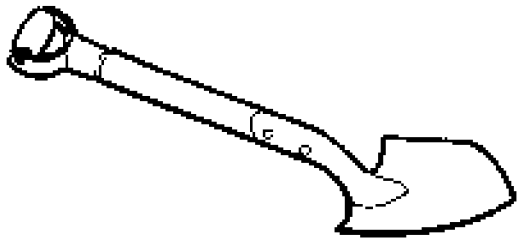

HTMT-765

The D-handled shovel resembles the long-handled shovel except that. it has a shorter handle with a D-shaped handgrip at the end. The D-handled shovel is used for fight work or for digging in cramped, tight places.

51.2.3 Spade.

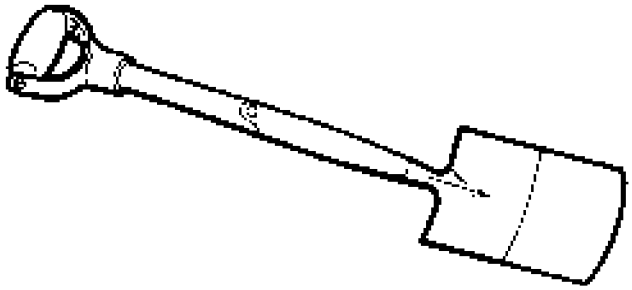

HTMT-766

The spade, like the shovel, has a steel blade a wooden handle. The blade may be rounded, pointed or square in shape and the handle may have the D or T-shaped handgrip. The spade is used for heavy digging or in confined areas.

51.2.4 Posthole Auger.

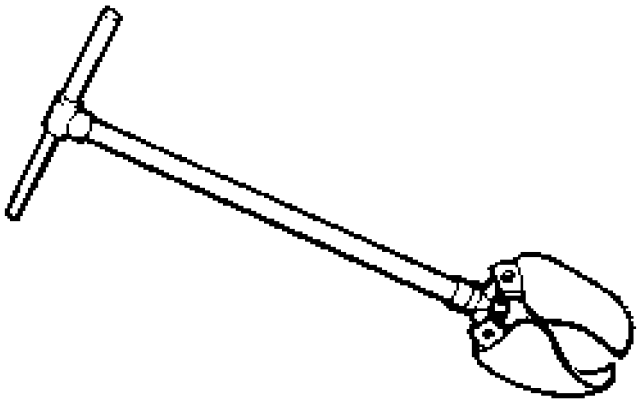

HTMT-767

The posthole auger is a long tool made up of a steel shaft that has two shovel-like blades at one end. The blades have curved faces which are hinged to permit slight movement with the concave surfaces of these blades facing each other. The posthole auger is used to bore holes in the ground for posts, poles and explosive charges.

51.2.5 Posthole Digger.

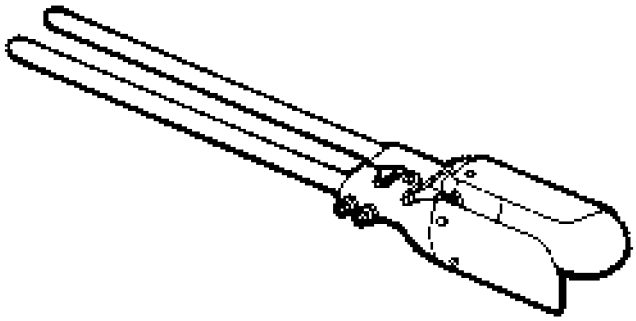

HTMT-768

The posthole digger has two concave blades similar to the posthole auger except that each blade is fastened to a long, wooden handle. The blades are hinged at the top so that separating the handles will close them and moving the handles together will open them. Like the auger, the posthole digger is used to bore holes in the ground for posts, explosive charges and similar jobs.

51.3 SAFETY.

1. Do not use a dull or defective tool.

2. Before swinging a tool, always be sure no one is close enough to be injured.

3. Store tools properly when not in use. Carelessly stored tools can cause injuries.

4. Use tools correctly so that you and everyone in the vicinity is protected from injury.

5. Do not use a tool not designed for the job.

51.4 USING THE LONG-HANDLED SHOVEL.

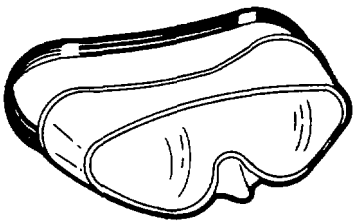

WARNING

Wear proper eye protection when working where flying particles may cause eye injury.

HTMT-769

1. Hold one hand at the end of the handle, with the other hand a few inches below it.

2. Press the blade into the ground. Use the foot on top of the blade for extra force if necessary.

3. With shovel embedded in soil, push the handle downward and pull back slightly to break the dirt loose.

HTMT-770

4. Slide one hand near enough to the shovel blade to raise the weight of the blade and dirt, holding the handle down with the other hand.

51.5 USING THE SPADE.

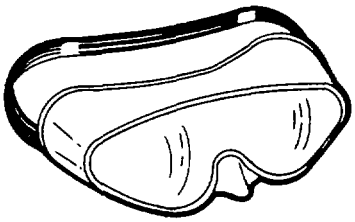

WARNING

Wear proper eye protection when working where flying particles may cause eye injury.

HTMT-771

1. Hold the handle upright gripping with both hands and push the blade into the ground with foot.

2. With the blade in the ground, push the handle downward and pull back to break the dirt loose.

HTMT-772

3. Slide one hand near enough to the blade to raise the weight of the blade and the dirt.

51.6 USING THE POSTHOLE DIGGER.

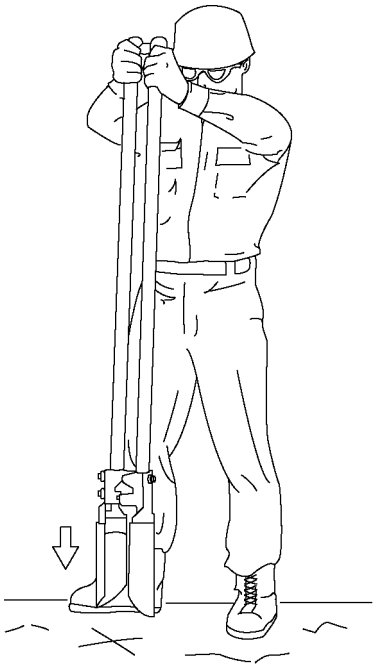

HTMT-773

1. Drive the posthole digger into the spot where the hole is to be dug.

2. Hold the handles slightly separated near the top, and bring the blades down sharply into the soil by force of the arms.

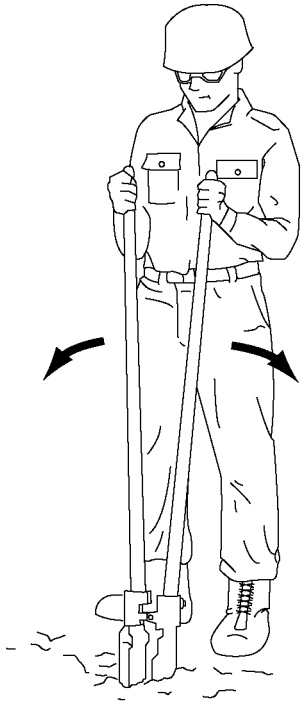

HTMT-774

3. Pull the handles apart to grasp the earth out of the hole and lift digger out of hole.

4. Continue the process until the hole is the required size and depth.

51.7 CARE AND CLEANING OF DIGGING TOOLS.

1. Tools should be cleaned often after each use and metal parts oiled before storing.

2. Never use a tool other than for the job it was intended.

3. Store all digging tools in their proper places when not in use.

4. Replace defective handles immediately.

WARNING

Linseed oil is a flammable liquid. To avoid personal injury, properly dispose of all cleaning rags in non-combustible containers.

5. Treat wooden handles occasionally with linseed oil to prevent drying out or splintering.

CHAPTER 52
ELECTRICAL POWER TOOLS

52.1 HOW TO CHOOSE AND USE THEM.

Types and Uses, Paragraph 52.2, provides you with a list of the electrical power tools found in the pioneer tool outfit. These pages should help you select the right power tool for the job. Using, Paragraph 52.4, tells you how to best use these tools. By becoming familiar with these procedures, you will build a good background for further skill development in the use of power tools. Care of Electric Power Tools, Paragraph 52.10, tells you how to keep your power tools in proper working condition. Safety, Paragraph 52.3, tells you how to use your power tools safely and wisely.

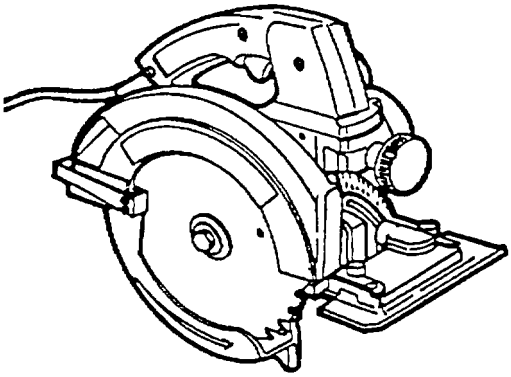

HTMT-775

52.2 TYPES AND USES.

Portable electric power tools are designed for a wide variety of uses including construction, tree cutting, bridging, or tree clearing. Electric power tools increase production and reduce time and manpower. Although there are many varieties of electric power tools, only those tools contained in the pioneer tool outfit will be covered in this chapter. They are the electric drill (1), hammer (2), impact wrench (3), circular saw (4), chain saw (5), sander (6), and accessories for these tools. For additional information on power tools not covered in this chapter, refer to FM 9-24.

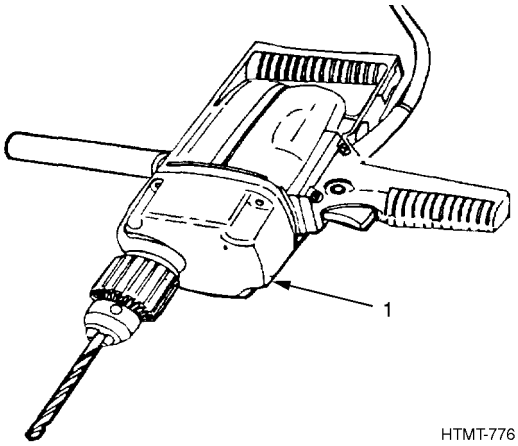

HTMT-776

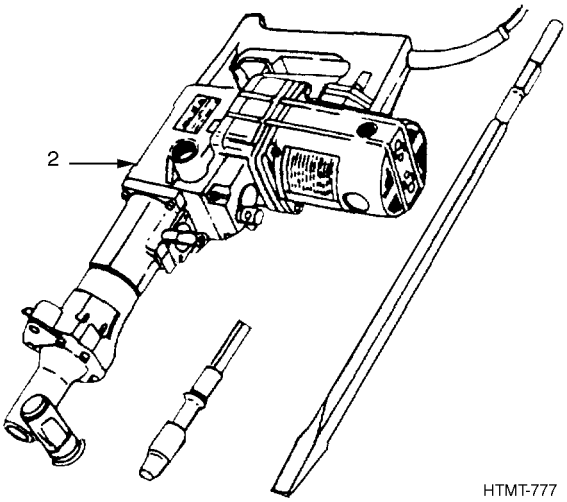

HTMT-777

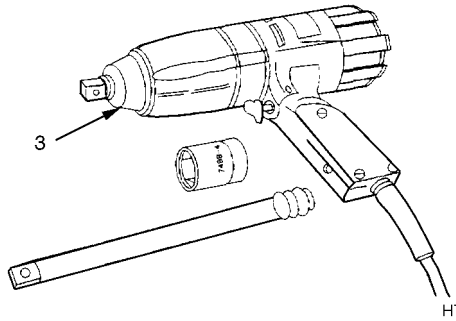

HTMT-778

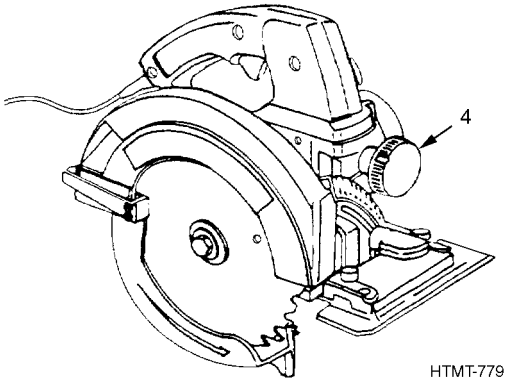

HTMT-779

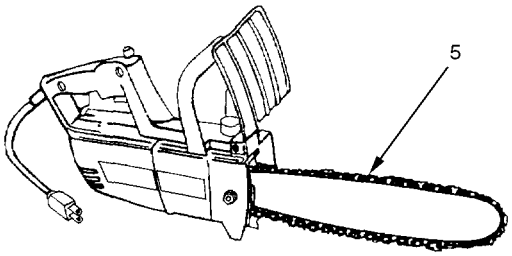

HTMT-780

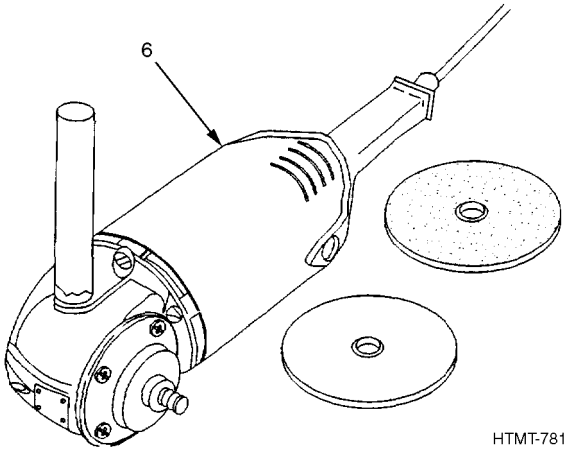

HTMT-781

52.2.1 Portable Electric Drill.

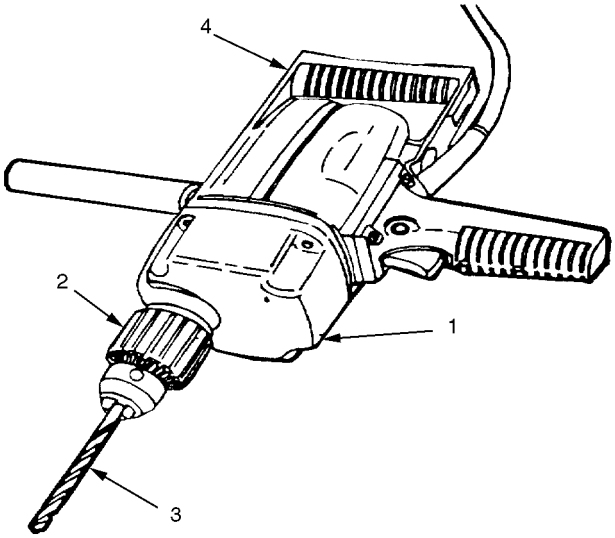

HTMT-782

The portable electric drill is basically an electric motor in a metal housing (1). The housing is fitted with a “chuck” (2) into which a bit (3) or other attachment can be inserted. The portable electric drill, although varying in size and design, usually has either a spade or pistol-grip handle (4). The portable electric drill is basically designed for drilling. However, by adding various accessories it can be adapted for different jobs. Sanding, sawing, buffing, and polishing are examples of possible uses.

52.2.2 Portable Electric Hammer.

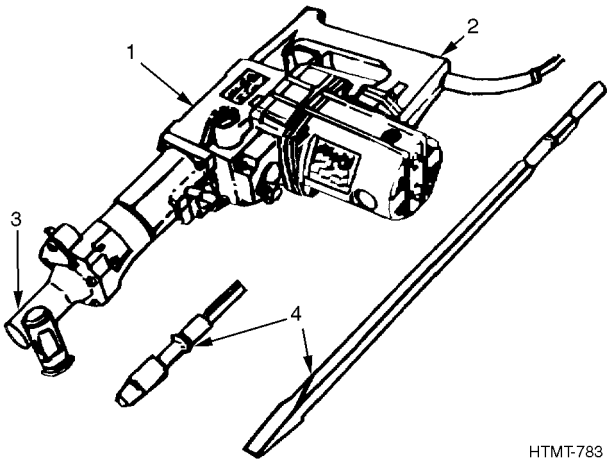

HTMT-783

The portable electric hammer consists of a metal housing (1) with a spade or pistol-grip handle (2). A strong spring inside the housing moves a steel piston back and forth in a pounding motion. The housing muzzle (3) is designed to hold a variety of bits (4) which give the electric hammer great versatility.

Examples of possible uses for this tool are beveling, caulking, pounding, digging, and breaking operations.

52.2.3 Portable Electric Impact Wrench.

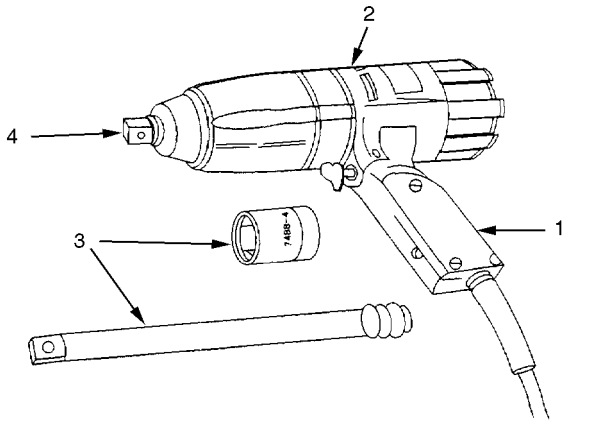

HTMT-784

The portable electric impact wrench consists of a pistol-grip handle (1) on a metal housing (2) which contains a motor that energizes the driving-anvil inside the muzzle of the housing. Attachments (3) are fastened to the driving-anvil by snapping them onto the socket retainer (4). The portable electric wrench with its accompanying equipment is primarily intended for applying and removing nuts, bolts, and screws. It may also be used to drill and tap wood, metal, plastics, etc., and to drive and remove socket head or self-tapping screws.

52.2.4 Portable Electric Circular Saw.

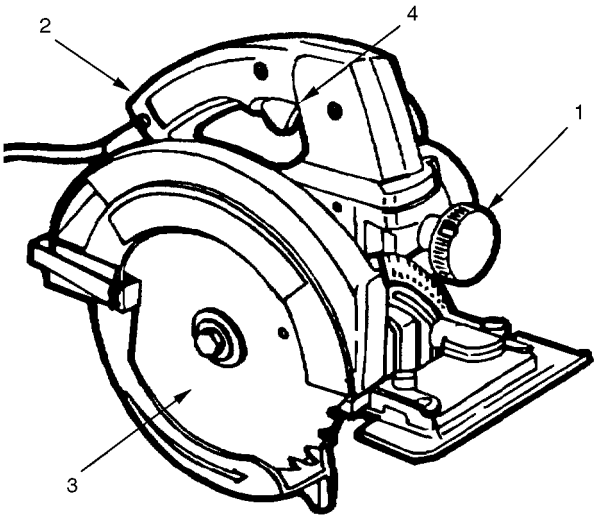

HTMT-785

The portable electric circular saw consists of a sturdy motor in a metal housing (1), a pistol-grip handle (2), and a circular saw blade (3). The trigger switch (4) is built into the handle. Saws vary in size and design depending on the nature of the task. There are many applications for this tool. Typical uses would be cutting studding to length, cutting off end boards, preparing trim, or ripping boards and planks.

52.2.5 Portable Electric Chain Saw.

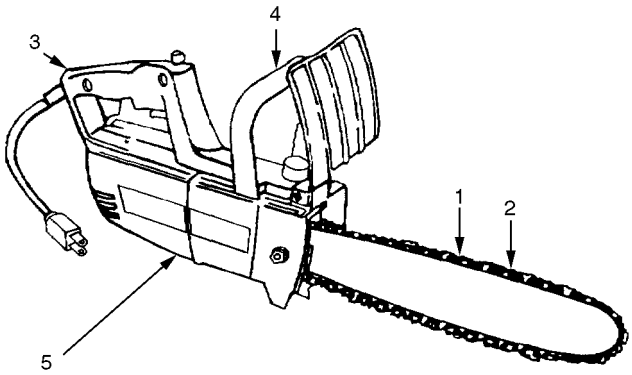

HTMT-786

The electrically driven chain saw is a portable power saw with the teeth (1) arranged on a flexible steel chain-like belt (2). It has a pistol-like grip (3) and bar frame (4) above the motor housing (5) for holding and guiding. Unlike the gasoline-powered chain saw, the electric chain saw is designed for lighter work such as tree trimming and cutting small logs and timber.

52.2.6 Portable Electric Disk Sander.

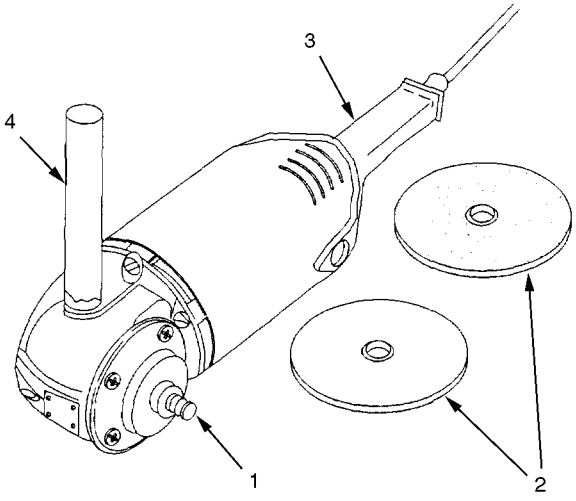

HTMT-787

The portable electric disk sander is an electrically driven tool with a spindle (1) at the front end for holding circular attachments (2). Various types of attachments can be fastened to the end of the projecting spindle. The rear end of the sander's housing tapers to form a guiding handle (3). To provide addi-

tional control, a second handle (4) is attached to the side of the housing. The portable electric disk sander with its many attachments can be used for a variety of tasks. Heavy-duty sanding, grinding, wire brushing, buffing, and planing are some of the possible applications.

52.2.7 Bench Grinders and Oilstones. The bench grinder is used to sharpen tools, dress screwdrivers, and to shape and smooth metal stock. Avoid grinding of non-ferrous metals (brass, copper, aluminum, etc.) on the grinder supplied; special grinding wheels are required for this purpose.

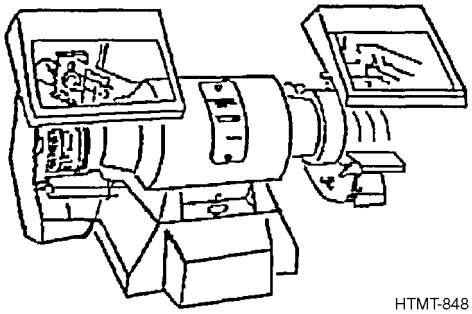

HTMT-848

The bench grinder available at the sites is equipped with two different types of grinding wheels. One wheel is coarse and is used for rough grinding, the other is fine and is used for tool sharpening and finish grinding. These grinders are also equipped with safety shields and tool rests. The tool rest should be adjusted so that the space between the grinding wheel and the tool rest is approximately 1/16 inch, but never over 1/8 inch.

Flexstones and oilstones can also be used for removing burrs and rough edges. A further use of the oilstone is the sharpening of tools. Flexstones are not to be used for this purpose.

Mounting Grinding Wheels on Spindles.

The following procedures should be used when grinding wheels are to be mounted on the spindle.

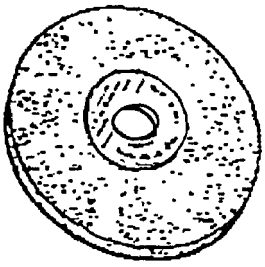

HTMT-849

a. Inspect the wheel for flaws and make the “ring test.”

b. Clean the bearing surfaces of wheel, flanges and spindle so that the clamping pressure will be evenly distributed.

c. Check the speed of the spindle to make sure that it is not running too fast for the type and size of wheel.

d. Make sure that the hole in the wheel bushing is the right size for the spindle. (neither too small nor too large).

e. Use flanges that are recessed and large enough to clamp the wheel well toward its circumference.

f. Tighten the spindle end nuts just enough to keep the wheel from moving out of position between the flanges.

g. Before turning on power, make sure that the wheel runs true and will strike no obstruction.

Grinding Wheel “Ring” Test

New grinding wheels should be unpacked promptly upon receipt and should be given the “ring” test for damage suffered.

Give this test also immediately before mounting either a new or used wheel on the spindle, especially if the wheel has been in storage for a considerable time.

Most defects in grinding wheels, including flaws and cracks, are not visible to the naked eye, but the “ring” test readily discloses them.

Make the test by suspending the wheel free and clear and tapping it gently with a light wooden implement, such as a wooden screw driver handle for light wheels, and a wooden mallet for heavy wheels.

Sound and undamaged wheels will give forth a clear metallic tone when tapped. If defective there will be no ring.

Wheels bonded with organic material do not give forth the same clear metallic sound as do verified and silicate wheels.

Any wheel should be dry and free of sawdust when the “ring” test is given; otherwise the sound will be deadened.

Grinding Suggestions

Listed below are several suggestions that, if followed, will eliminate machine abuse and provide maximum protection for the operator:

a. Wear safety glasses at all times when working near the grinder, including the period of adjusting guards and

tool rest. Do not remove the glasses until the job is completed and the machine shut off.

b. Be sure that the wheel guards, tool rests, and shields are properly positioned before applying power.

c. Stand to the side of the grinder when turning it on. Allow the machine to run for one minute before engaging the wheel with the work. The turn-on period is the mostly likely time for a wheel to break.

d. Keep the tool rest as close to the grinding wheel as possible (approximately 1/16 inch) when using the grinder; take small cuts with moderate pressure.

e. Never use a glazed, worn, or uneven wheel; replace it.

f. Never operate the grinder or attempt any repairs without having a thorough knowledge of the grinder's operation.

Portable Rotary Polishers and Grinders.

Portable rotary polishers and/or grinders are either electric or pneumatic powered types of various speed ranges. Wheels used on these tools vary from coarse grit for metal removal, fine grit for paint or rust removal, to soft fabric material for polishing surfaces.

When mounting wheels on spindles, the following procedures should be used:

a. Inspect grinding wheels for flaws and make the "ring test" (Ref. Grinding wheel "Ring" test paragraph.).

b. Clean the bearing surfaces of wheel, flanges and spindle so that clamping pressure will be evenly distributed.

c. Make sure the hole in the wheel bushing is the right size for the spindle (neither too small not too large).

d. Use flanges that are recessed and large enough to clamp the wheel well toward its circumference.

e. Tighten spindle end nuts just enough to keep wheel from moving out of position between the flanges.

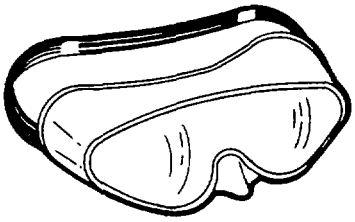

WARNING

Eye protection must always be used when operating these tools. A grinding wheel that has a glazed surface, and an uneven wheel should never be used.

CAUTION

- Pencil type die grinders, designed with a rotary or a twist throttle control and not a spring or air pressure loaded cut off switch, may be used with cutting tools not greater than 1/8" diameter.

- A hand held polisher or grinder must always be equipped with an operating switch that is either spring loaded or air pressure loaded to the cut-off position to cut-off power when the hand grip is released. Tools without this equipment should be discarded.

- Grinding wheels used must always be rated at a speed equal to or greater than the tool it will be used on.

- These tools should only be used on objects that are either massive enough or restrained to prevent grinding or polishing from moving or throwing the object. This tool shall never be used to grind or polish an item that is held by hand.

- These tools will never be equipped with a tool rest, on bench mounted grinders, but must always be equipped with a guard that will cover not less than one half the periphery of the wheel being used.

52.3 SAFETY.

Before operating any power tool, refer to Chapter 2, Section II for safety guidelines to observe when using these tools.

52.4 USING THE PORTABLE ELECTRIC DRILL.

WARNING

Before using any electrical tool, always make certain the tool is equipped with proper grounding features. Failure to have proper grounding can result in serious shock.

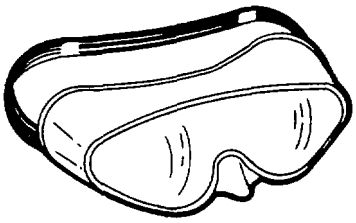

WARNING

Always wear proper eye protection when working where flying particles may cause eye injury.

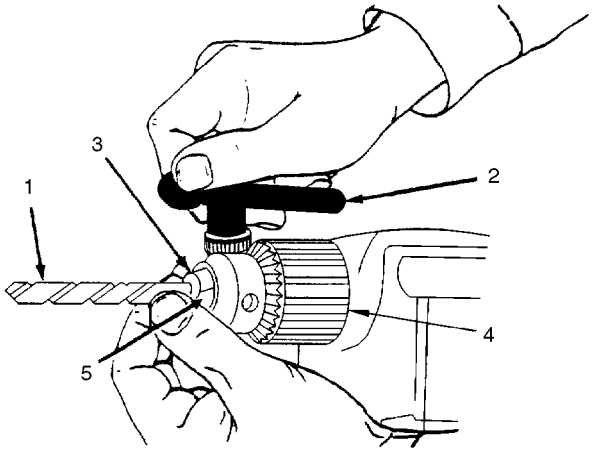

HTMT-789

1. Select the proper bit (1) required for the task.

NOTE

To turn chuck key in either direction a firm grasp of the chuck is required.

2. Fit the chuck key (2) into the side adjusting hole between jaws (3) and chuck (4) and turn the key counterclockwise until the chuck opens enough to admit the bit shank (5).

3. Insert the bit and center the shank in the chuck jaws. Tighten jaws securely by turning the chuck key clockwise.

4. Remove chuck key and store where key will not get lost.

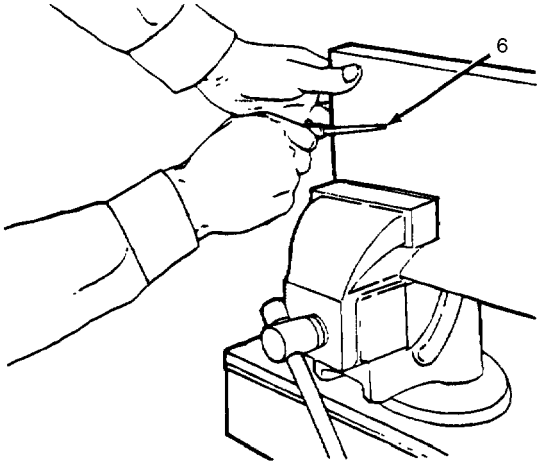

HTMT-789

5. Before drilling, make sure that the work is stationary or firmly secured.

6. Using a punch or awl, make a small prick point (6) in the spot where the hole will be made. (This will prevent the drill bit from bouncing or slipping away from the spot where the hole is to be drilled.)

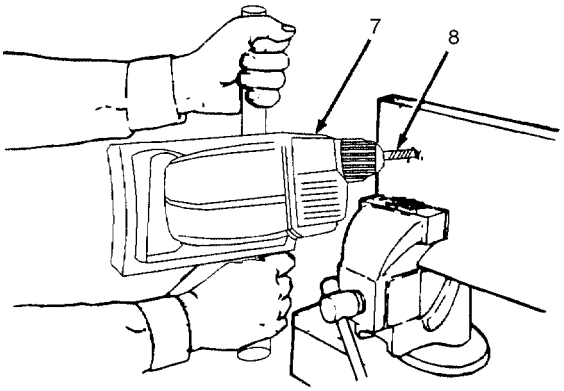

HTMT-790

7. Connect electric drill (7) to power source. Place the drill bit on the marked spot and depress trigger switch. Begin drilling, exerting firm but even pressure to keep the bit cutting.

8. Withdraw the bit frequently from the work to clean chips from the bit flutes (8) and to allow the bit to cool.

9. Ease up on the drill pressure as the bit approaches the other side of the work surface.

10. After hole is completed, carefully withdraw rotating drill bit to prevent binding or breaking. Release trigger switch.

52.5 DRILLS, REAMERS, TAPS, AND COUNTERSINKS.

52.5.1 Introduction. The accurate drilling and reaming of metals and the tapping of holes depends largely upon the user's knowledge of the tools required to perform these functions. If these tools are properly used and cared for, a higher quality of workmanship will be obtained. This chapter contains information relative to the use and care of these tools.

52.5.2 Twist Drills. Twist drills are the most common tools used in drilling metal and are made in many different sizes and lengths. These drills are made of carbon steel or high-speed alloy steel. Carbon steel drills are used for general drilling while the alloy steel drills are used for drilling hard metals such as stainless steel.

52.5.3 Drill Terminology. A twist drill (figure 52-1) is composed of three main parts: point, body, and shank. The point of a drill is the cone-shaped end (normally 31 degrees) which does the actual cutting. The body is the center section of the drill between the point and shank. The cut-out portions of the body are called flutes. These flutes serve a definite function in that they cause the metal chip to curl tightly within itself occupying a minimum amount of space, and they also allow lubricants to flow easily down to the cutting edge. The shank of the drill is the end that fits into the drill chuck.

The actual cutting is done by the cutting lips or edges which are formed by the intersection of the flutes and the cone-shaped point. The dead center of the drill is the edge at the extreme tip of the point. The dead center should always be in the exact center of the drill axis. When drills are reground, it is possible to have the dead center point off center resulting in one cutting lip doing most of the cutting and placing excessive strain on the drill. The narrow strip at the edge of each blade is called the margin. This strip, which extends the entire length of the flutes, is part of a cylinder interrupted by the flutes. The actual drill diameter is measured from margin to margin.

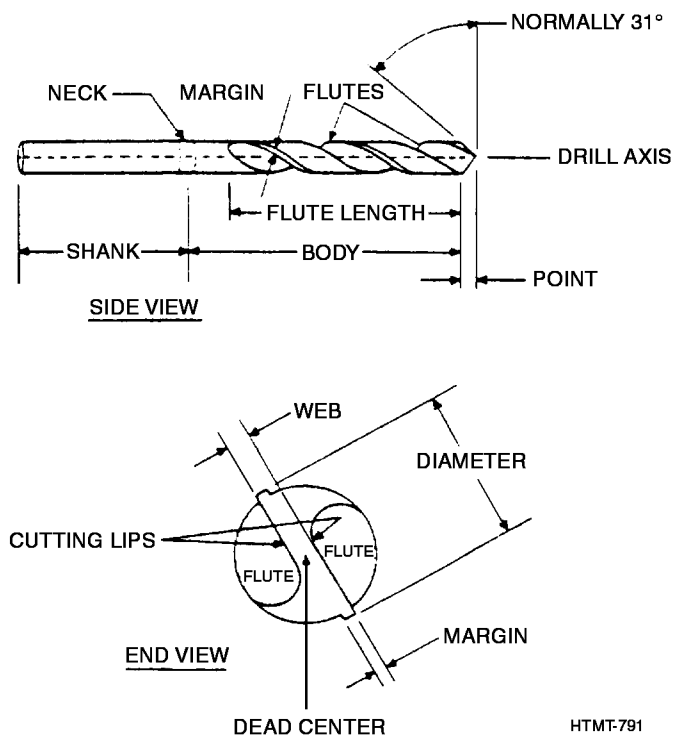

Figure 52-1. Drill Terminology

52.5.4 Drill Sizes. The twist drills available at the sites are designated in two different ways:

a. Fractional Sizes - These drills come in sizes from 1/32 inch to 1/2 inch. The difference between one drill size and the next larger or smaller size is always 1/64 inch.

b. Numbered Sizes - These drill sizes vary from No. 1 (0.2280 inches) to No. 80 (0.0135 inches). The smallest numbered size drill stocked at the sites is No. 60 (00.0400 inches).

If the size number, which is etched on the drill shank, has worn off, the drill size can be obtained by using a micrometer. Measure the drill from margin to margin on the drill body near the shank end. This shank diameter is usually a few ten-thousandths of an inch smaller than the point diameter.

52.5.5 Using the Drill. Prior to performing the job the proper size drill bit and drill motor must be selected. Tables 3 and 4 in the Appendix list the various drill bits available. There are two drill motors available at the site. One, a high-speed, 1/4 inch capacity drill motor, is used for general drilling of light metals; the other, 1/2 inch capacity, is used for drilling large holes. The motor of the 1/2 inch capacity drill is geared down to prevent overheating of the drill bit.

The object to be drilled should be held in a vise when possible. Never attempt to hold the work with your hands. The drill may catch or jam and start the stock spinning. When this occurs the stock may fly loose and injure personnel in the immediate area. When drilling thin sheet stock, back up the stock with a piece of wood to prevent the stock from being bent out of shape.

When the location of the desired hole is selected, its should be center punched. This will aid the drill in starting to cut and will prevent it from wandering. Turn the drill chuck a few times by hand before turning on the power to insure that the drill bit is properly installed. Keep the drill cutting at all times while in contact with the metal.

A steady and uniform pressure should be applied at all times to insure continuous cutting. The drill will become excessively hot if permitted to turn on the metal without cutting. When the drill point is about ready to break through the metal, ease up on the pressure. This point is noted by the difference in pressure and cutting feel. Don't permit the drill to project through the hole. When the hole is complete, remove the drill immediately by pulling it back as it continues to turn in a clockwise direction.

A drilled hole will often have rough edges or burrs on both surfaces. To remove these, select a drill bit twice the size of the hole and hand rotate the point against the burrs. When possible insert the drill bit in a file handle when performing this job. Be careful not to de-burr the hole too much. The hole should be a true cylinder and not counter-sunk.

When the hole to be drilled is large, a pilot or guide hole should be drilled first. This small hole will help guide the larger drill and will also prevent the larger drill from wandering across the metal.

52.5.5.1 Removing Rivets. To remove a defective rivet or to disassemble a unit joined by rivets, use the following procedure:

a. Select a twist drill equal in size or smaller than the rivet shank.

b. Drill into the exact center of the head to a depth equal to the head thickness.

c. Insert a pin punch in the hole and pry off the rivet head.

d. Drive the rivet shank out of the metal with a pin punch.

52.5.5.2 Drilling Safety Practices. A misused drill can result in personal injury. When performing a drilling operation, the following safety precautions should be adhered to:

a. Be sure that the drill selected is of the proper size, free of rust, and that the flutes are clean.

b. Keep the drill bit tight in the chuck.

c. Be sure that the drill motor switch is off when inserting the line cord into the receptacle.

d. Never use a bent drill.

e. Be certain that the cutting edges and point are not dulled.

f. Be sure that the metal stock is properly secured.

g. Always wear safety glasses.

h. Turn off the drill motor before laying it down.

52.5.6 Countersinks. Countersinks are used to bevel the end of drilled holes to fit screw and bolt heads of the countersink type. The countersink stocked at the sites is equipped with a micrometer adjustment (adjustable to 0.001-inch) and a stop pin that prevents the countersink from cutting deeper than the desired depth. The micrometer adjustment of this tool is calibrated and operates identically to the micrometer caliber described in paragraph 3.4.5 of TO 32-1-2.

The countersink is designed to hold a variety of sizes of cutting heads, both in 82° and 100° point angles. The reason for the two different point angles is that, at a site, screws and bolts are available with two different types of countersunk heads (figure 52-2). The countersink cutting heads are also designated according to the size of the hole being countersunk, which is, in effect, the minor diameter of the screw that will be used. This measurement is the diameter of the countersink cutter pilot. The purpose of the pilot is to insure that the countersunk hole is concentric with the screw hole.

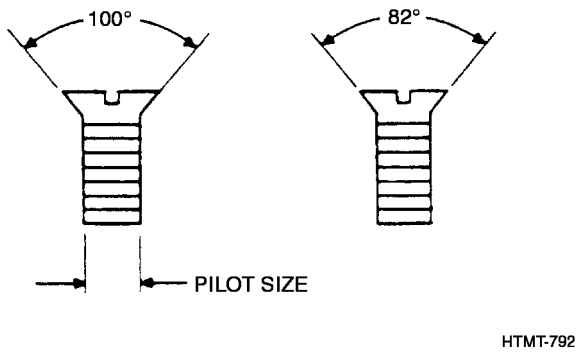

Figure 52-2. Countersink Angles

The micrometer stop countersink tool and the various cutting heads are illustrated in TO 32-1-2, figure 5-9.

52.5.6.1 Using the Countersink. The following procedure is employed when using the countersink: (Figure 52-3).

a. When using the countersinks always wear safety glasses.

b. Select the desired countersink cutter according to point angle and pilot size.

c. The countersink unit is then attached to a drill motor.

d. Adjust the micrometer stop to the desired depth. This will be slightly more than the thickness of the head. Head thickness measurements for most of the screws available at the site will be found in the Coded Parts List.

e. Be sure that the unit is properly secured in the drill chuck before turning on power.

f. Hold the countersink guard in the left hand and the drill motor in the right hand. Never turn on power without holding the countersink guard.

g. When possible, countersink a test hole in scrap stock to insure that the dimensions are correct.

h. Countersink the hole approximately half way, then remove the tool and check the hole.

i. Countersink the remainder of the hole until the guard collar rests on the metal.

j. Examine the finished job to insure that the hole is round and even and that the screw fits properly.

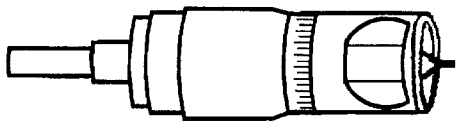

MICROMETER STOP COUNTERSINK

PART NO. 3204375 - COUNTERSINK TOOL

PART NO. 3204386 - COMPLETE KIT

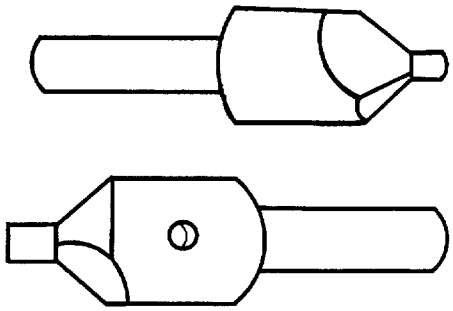

COUNTERSINK CUTTERS

	POINT ANGLE	PILOT DIAMETER
PART NO. 3204376	82	0.098 IN
PART NO. 3204377	82	0.128 IN
PART NO. 3204378	82	0.159 IN
PART NO. 3204379	82	3/16 IN
PART NO. 3204380	82	1/4 IN
PART NO. 3204381	100	0.098 IN
PART NO. 3204382	100	0.128 IN
PART NO. 3204383	100	0.159 IN
PART NO. 3204384	100	3/16 IN
PART NO. 3204385	100	1/4 IN

HTMT-793

Figure 52-3. Countersink Tool

52.6 USING THE PORTABLE ELECTRIC HAMMER.

WARNING

Before using any electrical tool, always make certain the tool is equipped with proper grounding features. Failure to have proper grounding can result in serious shock.

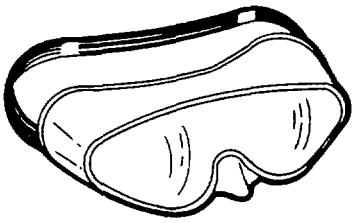

WARNING

Always wear proper eye protection when working where flying particles can cause eye injury.

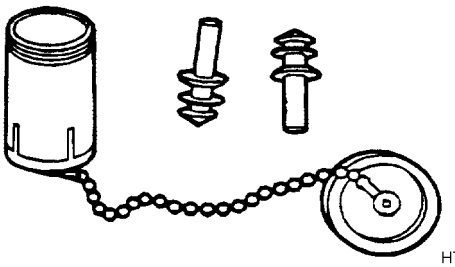

HTMT-794

WARNING

The electric hammer produces hazardous noise levels when in operation. Always wear proper protection to avoid possible hearing loss.

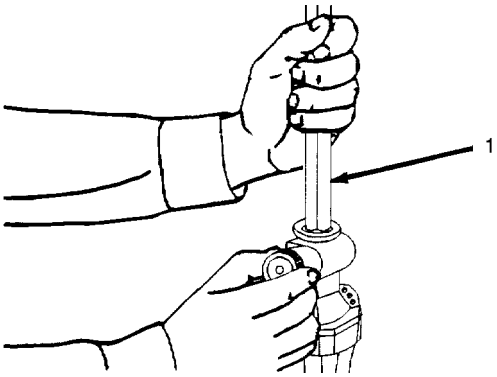

HTMT-795

1. Select the correct attachment (1) required for the task.

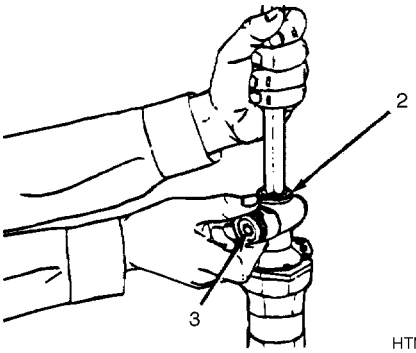

HTMT-796

2. Insert attachment into bit retainer (2) and secure in place with locking collar (3).

CAUTION

To prevent unnecessary wear of precision parts and components, place bit against work surface before operating switch.

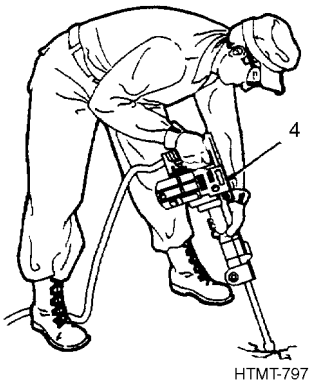

HTMT-797

3. Connect hammer (4) to power source and depress handle trigger.

4. Apply only enough pressure to keep the bit in contact with working surface.

5. Occasionally stop the hammer and clear dust or other residue from the working surface.

52.7 USING THE PORTABLE ELECTRIC IMPACT WRENCH.

WARNING

Before using any electrical tool, always make certain the tool is equipped with proper grounding features. Failure to have proper grounding can result in serious shock.

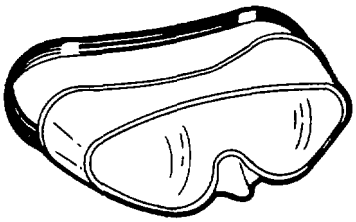

WARNING

Always wear proper eye protection when working where flying particles may cause eye injury.

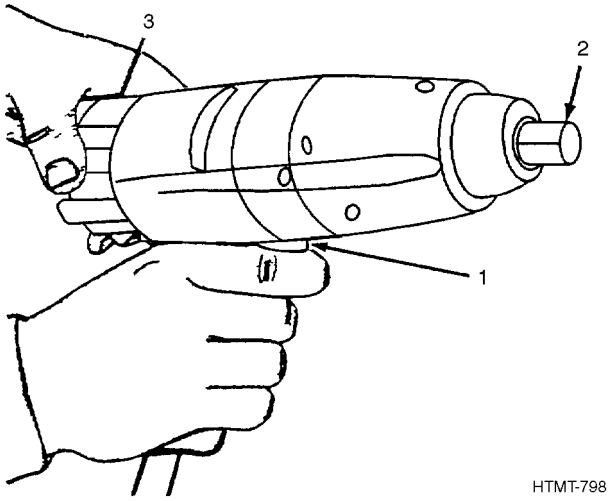

HTMT-798

Before start of work make sure impact wrench and its reversible features are functioning properly in the following manner:

1. Connect cord to power source.

2. Depress trigger (1) and note the rotating direction of the driving anvil (2).

3. Stop the wrench and adjust the ratchet switch (3) to reverse the direction.

4. Start the wrench again making sure the driving anvil is now rotating in the opposite direction.

5. Repeat steps 2 through 4 several times to make sure the wrench is reversing consistently.

6. Disconnect impact wrench from power source.

7. Replace the wrench if it does not perform in the above manner.

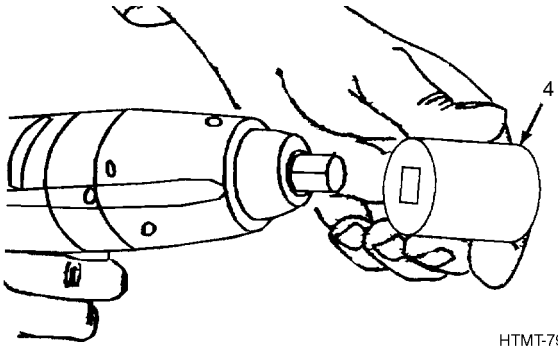

HTMT-799

WARNING

Do not use standard sockets with any impact tool they can shatter causing serious injury and/or damage to the equipment.

8. Select the proper attachment (4) and secure it in place on the driving anvil.

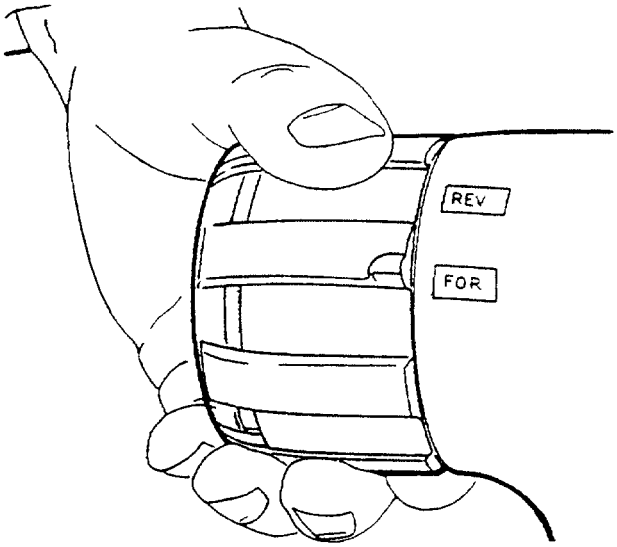

HTMT-800

9. Set the ratchet switch in desired position for anvil rotation required. Reconnect impact wrench to power source.

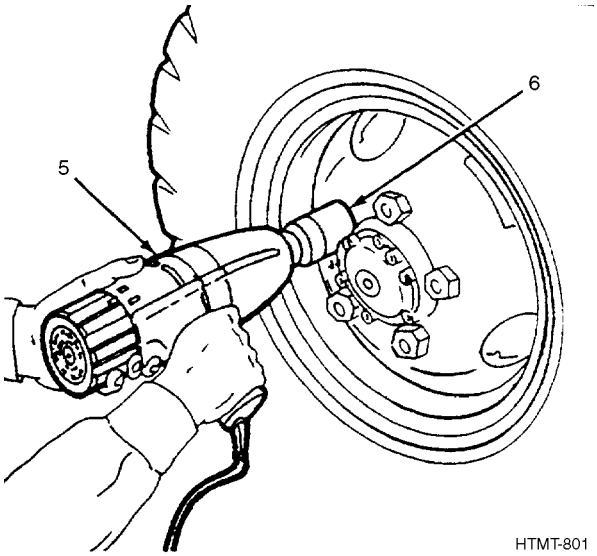

10. Using both hands, place impact wrench (5) on work surface (6) and depress trigger.

11. Continue operation until work is completed. Release trigger to stop wrench.

52.8 USING THE PORTABLE ELECTRIC CIRCULAR SAW.

WARNING

Before using any electrical tool, always make certain the tool is equipped with proper grounding features. Failure to have proper grounding can result in serious shock.

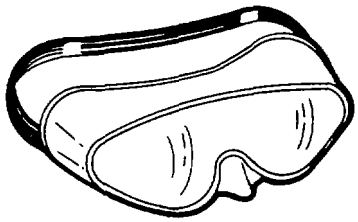

WARNING

Always wear proper eye protection when working where flying particles may cause eye injury.

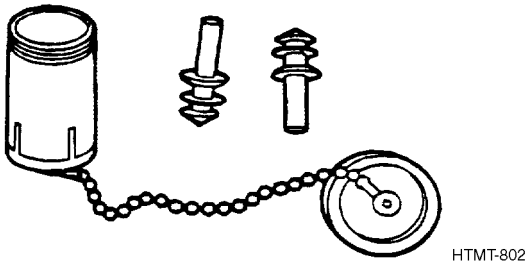

WARNING

The electric circular saw produces high noise levels when in operation. Always wear proper protection to avoid possible hearing loss.

Select the proper saw blade for the task and attach as follows:

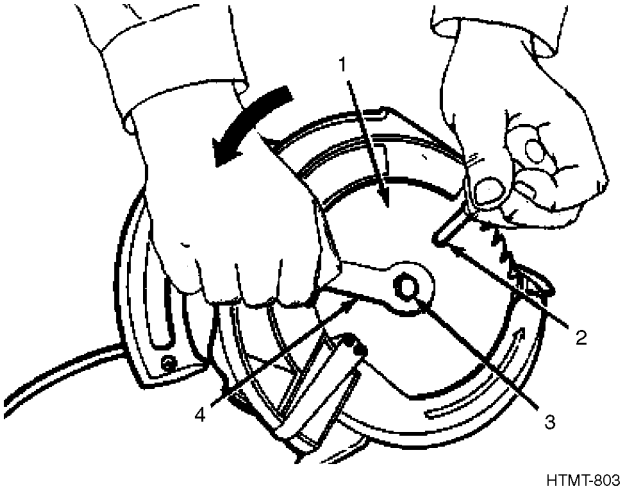

1. Make sure power to saw is disconnected.

2. To change saw blades, lock the old blade (1) on the saw by inserting a punch, screwdriver, nail, etc, in blade hole (2) provided.

3. Remove the old blade by removing the saw clamp screw and flange (3), using wrench (4) provided. Turn the wrench counterclockwise to loosen blade.

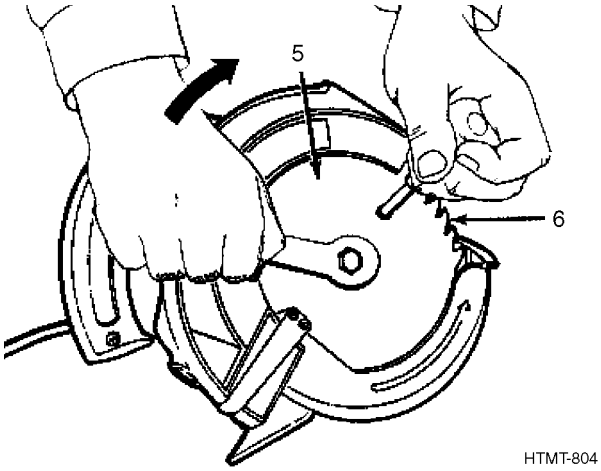

4. Install new saw blade (5) on saw, and make sure teeth (6) are in the correct cutting direction (upwards toward saw).

5. Tighten clamp and flange screw by turning wrench clockwise.

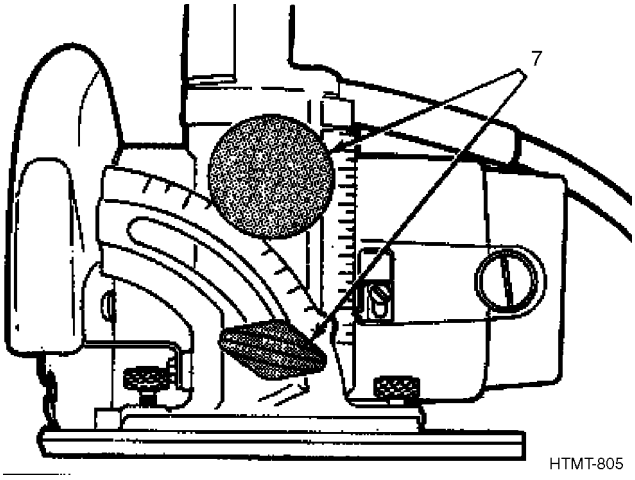

6. Set the saw's guides (7) to the correct angle and depth of the cut required.

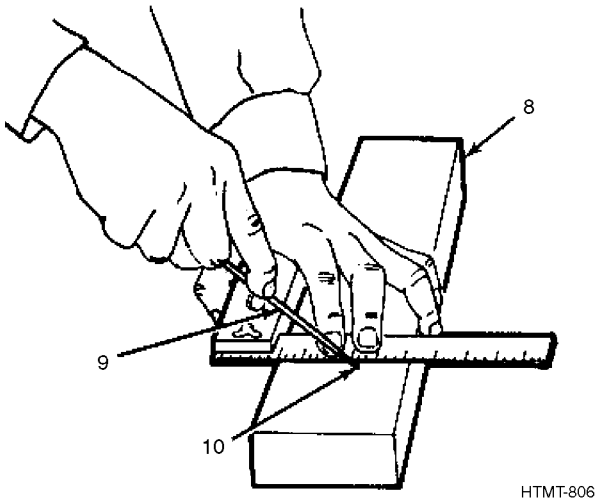

7. Make sure the work (8) to be cut is firmly secured to prevent slippage or movement.

8. With a marking instrument (9) such as a pencil, pen, scribe, etc., draw a straight line (10) across the work surface to act as a guide for the saw blade to follow.

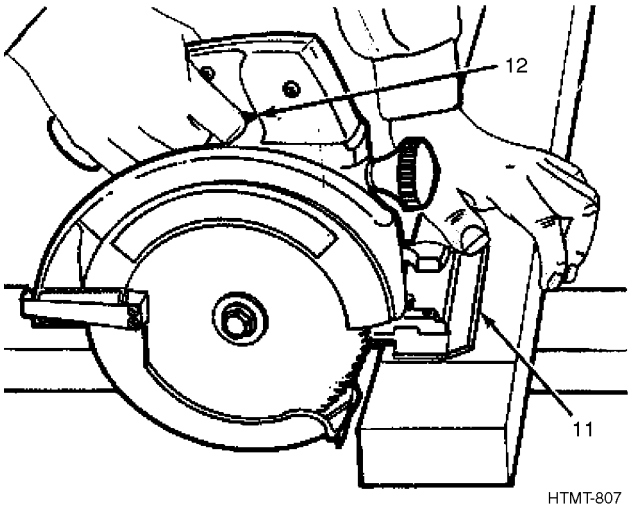

9. Connect circular saw to power source and place sole plate (11) on work surface.

CAUTION

The saw blade must be revolving at full speed before it contacts the work surface.

10. Depress handle trigger (12) to start saw and follow guideline made in step 8.

11. When cutting, apply firm, steady pressure. Be careful not to force the saw.

12. Continue until blade has completed the entire cut. Release trigger to stop saw.

52.9 USING THE ELECTRIC CHAIN SAW.

WARNING

Before using any electrical tool, always make certain the tool is equipped with proper grounding features. Failure to have proper grounding can result in serious shock.

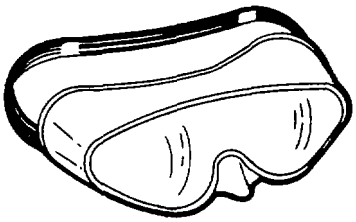

WARNING

Always wear proper eye protection when working where flying particles may cause eye injury.

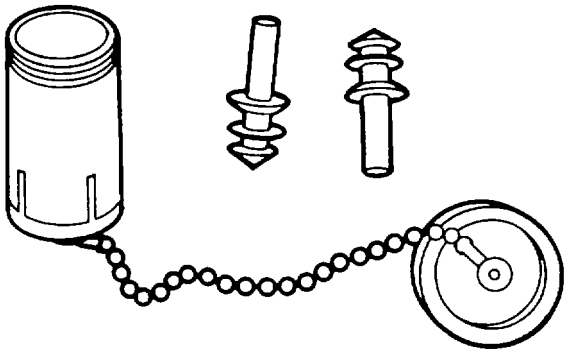

HTMT-808

WARNING

The electric chain saw produces high noise levels when in operation. Always wear proper protection to avoid possible hearing loss.

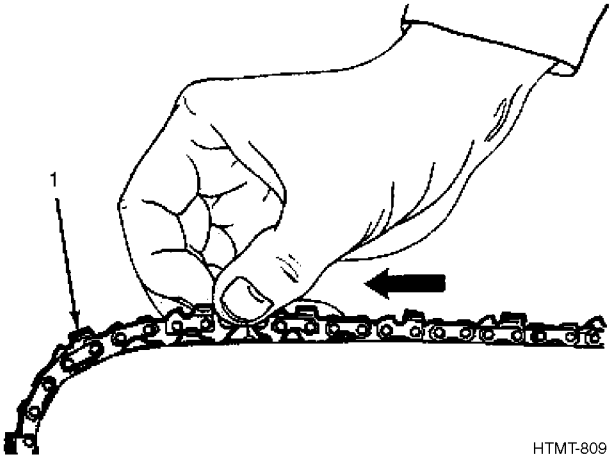

HTMT-809

1. Make sure power source is disconnected. Before using, ensure that the chain teeth (1) are in the proper position (saw should cut in direction of arrow).

2. Check the teeth to make sure they are sharp and undamaged.

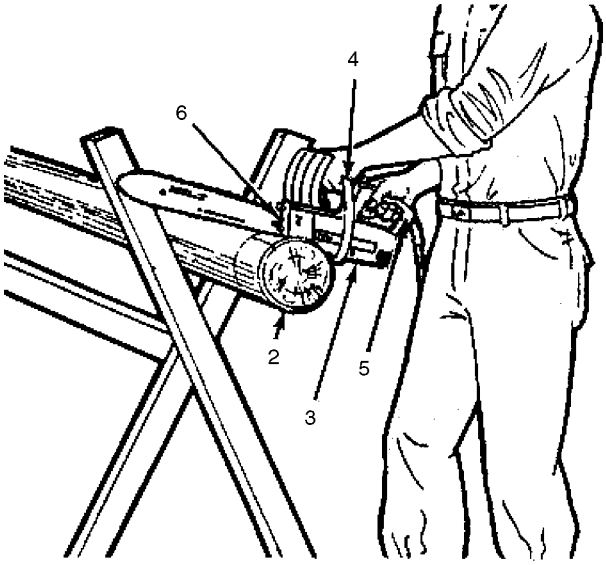

HTMT-810

3. Ensure that the work (2) is stationary and well secured to prevent slippage or movement.

4. Connect chain saw to power source.

WARNING

Never stand directly behind chain saw.

5. Stand to the left of the saw (3) with your left hand on the front handle (4) and your right hand on the rear handle (5).

NOTE

Reverse the position of the stance and hands if left-handed.

6. With your weight evenly distributed, depress trigger to start saw.

WARNING

When cutting, keep the nose of the guide bar from contacting logs, branches, ground or any other obstruction. This can cause “Kickback” which is a quick and dangerous upward movement of the guide bar and saw chain.

CAUTION

The saw chain should be at maximum speed before contacting working surface.

7. Cut with the spike bar (6) set firmly against the wood and apply right pressure.

8. Continue to guide the chain saw through the work until cut is completed.

WARNING

Before using any electrical tool, always make certain the tool is equipped with proper grounding features. Failure to have proper grounding can result in serious shock.

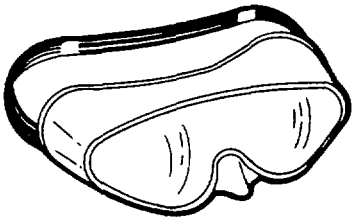

WARNING

Always wear proper eye protection when working where flying particles may cause eye injury.

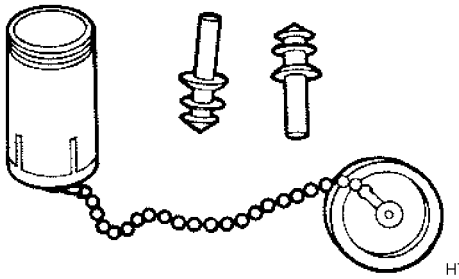

HTMT-811

WARNING

The electric sander produces hazardous noise levels when in operation. Always wear proper protection to avoid possible hearing loss.

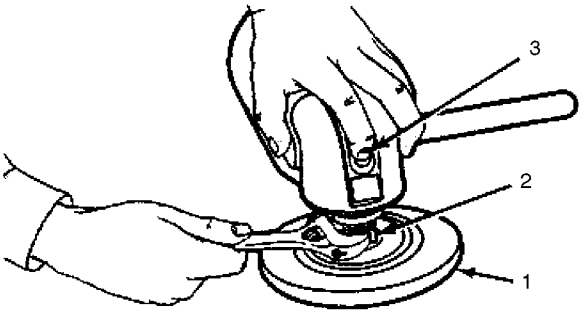

HTMT-812

1. Select the proper attachment (1) and secure it to the spindle (2) by depressing locking button (3) and tightening spindle as shown.

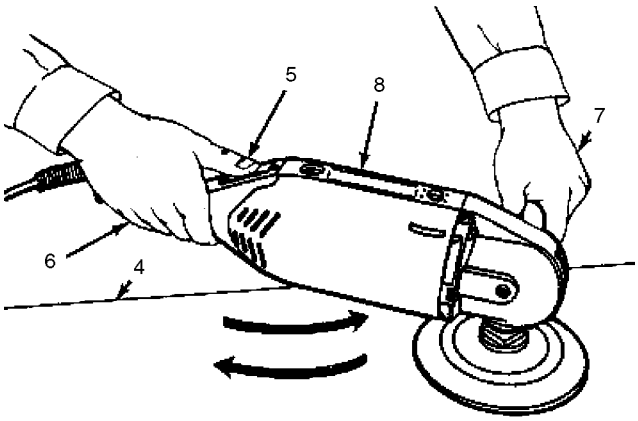

HTMT-813

2. Make sure the work surface (4) is secured to prevent movement.

3. Connect sander to power source. Depress switch (5) on the sander so that the attachment is turning before placing it on the work surface.

CAUTION

Using excessive pressure will slow up the sanding action, clog the disk, and cause motor to overheat.

4. With one hand on each handle (6) and (7), begin sweeping the sander (8) back and forth across the work surface.

5. During operation, tilt the sander slightly so the entire disk does not contact the work surface.

6. Brush or clean the sanding dirt from the work surface frequently.

7. When finished, lift the sander from the work surface before turning off the switch.

52.10 CARE OF ELECTRIC POWER TOOLS.

In order to achieve and maintain maximum performance, all electrical power tools must be given proper care. The following is a list of guidelines that will help keep your power tools in a “ready to use” condition.

1. Keep all power tools, especially the housing intake and exhaust holes, clear and free of dust and dirt at all times.

2. Examine power tool cords for exposed loose wires and for damaged insulation.

3. Wipe power cords frequently to prevent deterioration from oil or grease.

4. Check cord plugs for loose prongs or cracked casings.

5. Never hold or drag electrical tools by the cord at any time.

6. To prevent rusting, apply a light coat of oil to cutting surfaces of tools.

7. Store power tools in properly designated containers when not is use.

CHAPTER 53
SOLDERING

53.1 INTRODUCTION.

Soldering that will meet Air Force requirements of no more than 1 error out of each 500,000 soldered connections requires skilled application and integrity. The success of IBM's reliability factor may depend on a satisfactory soldered connection. Consider this down-time comparison. The time spent to find a defective tube, resistor, transformer, or other component part averages half an hour. Isolating a poor soldered connection can take eight hours or longer.

Solder is one of the oldest and most useful of alloys. Because of the ease with which it has been used, few people have bothered to acquire the basic, but necessary, background for good soldering techniques. Soft solder is a fusible alloy mainly composed of tin and lead. This alloy makes it possible to join two or more metals at temperatures well below their melting point. The solder-to-metal attachment is formed by an inter-metallic-compound phase which takes place at comparatively low temperatures. The solvent action of hot solder on copper or steel resembles the action of a few drops of water on salt. The solder dissolves microscopic particles of the copper or steel, forming a chemical attachment instead of physical adhesion. Therefore, heating the soft flexible solder during the soldering act causes a chemical change to take place which results in a hard metal alloy. Thus when two or more pieces of metal are soldered together, a joint is formed which acts like one continuous piece of metal. (This is not true of a pure physical connection, such as a bolt or spring, because a layer of oxides always remains between the surfaces.) In addition, the solder alloy withstands the stress and strain of the temperature changes without rupture of the joint.

The primary purpose of a soldered joint is to achieve an airtight metallic connection by means of a film of solder alloy, varying in thickness from 0.002 to 0.004 inch between the metal parts; i.e., wire and terminal. When such a connection has been made, it is a waste of time and material to add solder just to improve its appearance; the electrical conductivity has been established with the original bond and will be unaffected by the addition of solder.

53.2 SOLDERING TOOLS.

Soldering tools are illustrated in Figure 53-1. Five different soldering irons with interchangeable tips, transformers (6.3 VAC), heat shunts, soldering iron holders, soldering aids, and an electric solder pot comprise the soldering tools stocked at field locations. The 6.3 VAC soldering irons are to be used with the available transformer which has four wattage taps: 26, 29, 32, and 35. Always use the lowest wattage necessary for the work. In most cases 26 watts will be sufficient for electrical soldering.

The interchangeable copper tips are coated with iron, 0.008 inch thick, to reduce scaling and wear caused by tin-copper alloying. The tip is pretinned by dipping into pure tin. These tips should never be filed. To clean the tip and remove oxidation wipe it with a cleaning pad.

The heat shunt is proved for use when working with delicate precision components such as transistors, diodes, miniature capacitors, and chokes. The excessive heat of the soldering iron will damage the component if the heat shunt, which dissipates heat, is not used.

53.3 BASIC SOLDERING TECHNIQUES.

The following general rules, while not all-inclusive, are applicable to the majority of soldering work to be performed.

53.3.1 Temperatures. When soldering with rosin core solder, temperatures in excess of 600°F must be avoided or the rosin will tend to carbonize and hinder rather than aid the soldering operation. Efficient soldering is promoted by using a soldering iron with adequate heat storage capacity. Such a device will maintain proper operating temperature in use. No attempt to solder must be made by heating an undersize or otherwise inadequate soldering iron to excessive temperature.

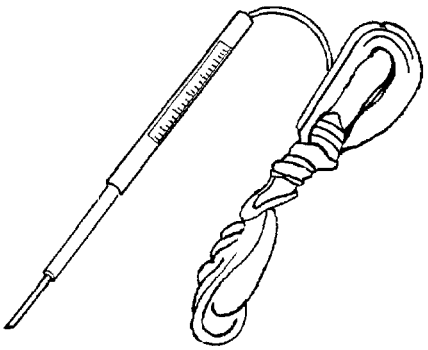	SOLDERING IRON 6 VOLTS 10 WATTS WITH REPLACEABLE TIPS.
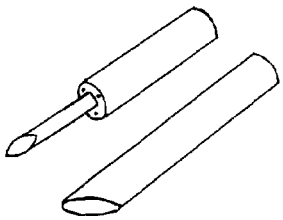	TIPS
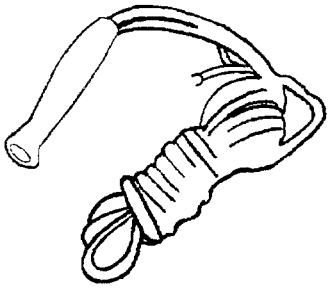	SOLDERING IRON 6 VOLTS 25 - 35 WATTS WITH REPLACEABLE TIPS.
(NO PHOTO AVAILABLE)	TIPS 3/16 - INCH PYRAMID 3/16 - INCH CHISEL USED AS REPLACEMENT TIPS FOR SOLDERING IRONS HANDLE.

HTMT-814

Figure 53-1. Soldering Tools and Accessories (Sheet 1 of 4)

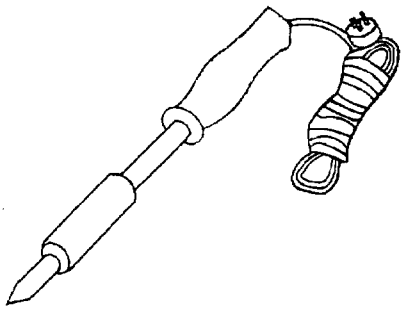	SOLDERING IRON 115 VOLTS 110 WATTS WITH REPLACEABLE TIPS.
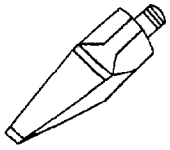	TIPS
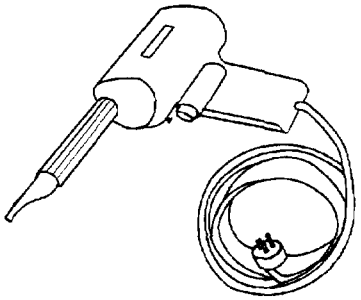	SOLDERING GUN GUN LEFT HOUSING RIGHT HOUSING TIPS
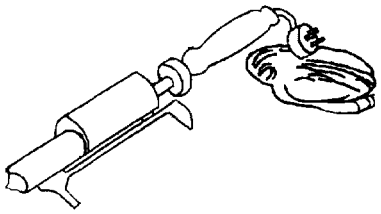	SOLDERING IRON 115 VOLTS 550 WATTS

HTMT-815

Figure 53-1. Soldering Tools and Accessories (Sheet 2)

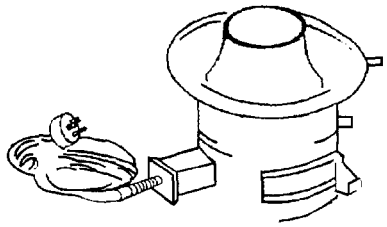	SOLDER POT USED FOR DIP SOLDERING.
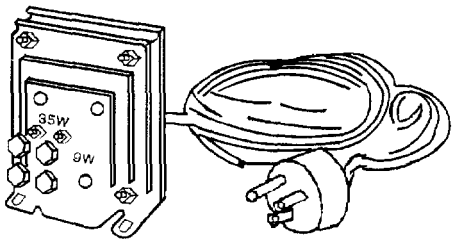	TRANSFORMER 4 TAPS PLASTIC BINDING POSTS
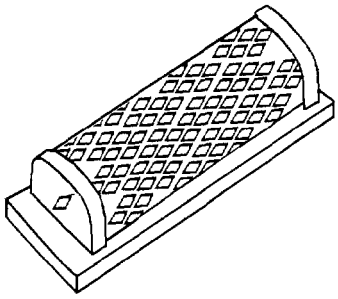	HOLDER
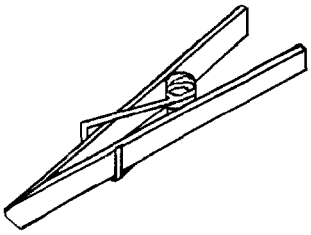	HEAT SHUNT

HTMT-816

Figure 53-1. Soldering Tools and Accessories (Sheet 3)

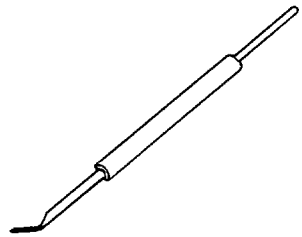

SOLDERING AID

ACCESSORIES

BAR SOLDER (60/40)	3% SILVER SOLDER
	USED ON OSCILLOSCOPE CERAMIC
	TERMINAL BLOCKS.
ROLL SOLDER 0.032 0.045 0.062	LIQUID FLUX

HTMT-817

Figure 53-1. Soldering Tools and Accessories (Sheet 4)

53.3.2 Heating. The surfaces of the parts to be joined must be heated to a temperature above the flow temperature of the solder (400-600°F for 60/40 flux cored solder). The joint will reach this temperature in less than 30 seconds. The more massive portion of the joint should be heated first, allowing the heat to be conducted to the less massive portion. Heat may be applied by soldering iron, molten alloy bath, or other suitable means. When using cored wire solder, the end should be kept open. To be effective, the flux must flow before the solder melts when touched to the joint. Flux core solder should never be flowed from the soldering iron to the joint (Figure 53-2). The application of heat should be carefully controlled during the soldering operation to prevent damage to other components of an assembly, such as fabric and insulation material.

NOTE

When working on vertical terminals, tin only one surface of the iron to restrict solder flow to that side.

53.3.3 Cooling. Liquids are not to be used to cool a soldered joint. By using proper solder and soldering techniques a joint will not become so hot that it needs rapid cooling to prevent the wire insulation from charing. In special cases involving assemblies with polystyrene or other low melting point insulation, the insulation may be placed in a cooling bath. However, in no case should the cooling medium contact the soldered joint.

53.3.4 Copper Bit Soldering Irons. The heat transmitting ability of copper-bit-soldering irons is seriously impaired by the formation of oxides on the bit surface. The formation of such oxides can be effectively retarded by maintaining a liberal coating of solder on the surface of the bit.

Plated tips resist corrosion and last longer because the plating, unlike copper, is not affected chemically by solder. These tips should not be filed or ground on the bench grinder. If cleaning is required, the point of the iron should be dipped in flux and retinned.

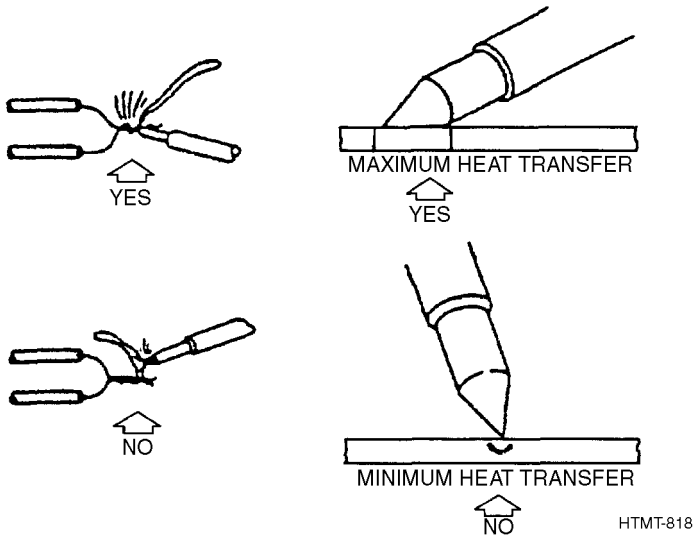

Figure 53-2. Using the Soldering Iron

53.3.5 Flux Residue Removal. After the joint has cooled, the residues from active fluxes can be completely removed or neutralized using Methylene Choride, part No. 3034905 or Tecsolv 928, part No. 3034686.

53.4 SOLDERING SAFETY PRACTICES.

The following safety practices shall be observed when soldering:

WARNING

Soldering may result in the emission of hazardous metallic fumes and vapors from fluxes used. Workers should position themselves so as to not directly inhale the fumes or vapors. Local conditions may be evaluated by the Bioenvironmental Engineer. This warning could prevent possible injury to personnel if they comply.

a. Safety glasses or appropriate eye protection must be worn while soldering.

b. The soldering iron should be placed in the holder when not being used.

c. Never try to remove solder from the iron by flicking the iron. This can put solder in the eyes and on clothes; it can also put a short in equipment. Use the cleaning pad provided.

d. Be careful to pick the iron up by the handle. Never point with the iron or use it as a tool to straighten terminals.

e. Unplug the iron if it is not to be used for a period of time.

f. When returning the soldering iron to stock, be sure that all excess solder is removed. It is a good practice to loosen the tip of the iron when not in use: this prevents the tip from corroding tight on the handle.

CHAPTER 54
PAINT APPLICATION

54.1 INTRODUCTION.

The application of paint to metallic sections of the SAGE Computer does not affect the usability or operation of the equipment. However, it does protect the equipment from corrosion, aids in keeping the equipment clean, protects newly stamped information, and creates a pleasant working atmosphere.

To insure that all painting accomplished at the sites meets high quality workmanship standards, the proper method of paint application (both brush and spray) will be explained in this chapter.

54.2 PRE-TREATMENT.

Whenever it is necessary to apply paint to a metallic surface that was not previously painted, or to painted surfaces which contain areas of bare metal (chips, mars, etc.), the metal must be pretreated to prevent corrosion and to insure a good bond between the finish paint and the metal. The method and type of metal being painted and its condition. This information is available in the paint specifications contained in FED 256.

54.3 BRUSH PAINTING.

Under normal conditions, brush painting will only be used when the area to be painted is very large. Most touch up work will be done by spray painting. The procedure to use when brush painting is as follows:

a. Clean the metal to be painted, using approved cleaning agents. All grease, rust, etc., must be removed. Corroded areas can be shaped using 220 grit or coarser sand paper.

b. Apply one coat of zinc chromate primer (part No. 3034741). Allow to dry.

c. Apply paste filler (part No. 3034740) where required and allow it to dry.

d. Sand filled areas if required. (Use a fine grit sandpaper. Preferably 240 or 600 grit.)

e. Apply one coat of grey primer sealer (part No. 3034742) and allow it to dry.

f. Apply the final coat of the desired color. First brush in one direction, then finish by brushing in a direction 90 degrees from the first application. It is better to apply two thin coats, 90 degrees from each other, than one heavy coat.

NOTE

Drying time can be accelerated by using the infrared lamp, part No. 3034800.

54.3.1 Care of Paintbrushes. A paintbrush is made up of three parts: handle, ferrule, and bristles. The ferrule is the metal band holding the bristles in place and to the handle. The heel of the bristles is the portion of the bristles adjacent to the ferrule.

To keep a brush in good shape, clean paint or enamel from it after each use. Work it out turpentine or its equivalent. In doing this, avoid pressing the brush down edgeways on the bristles as this will force them out of shape. Work the solvent well into the heel. To remove paint clinging to the bristles., lay the brush flat on a board and scrape the bristles carefully with a blunt knife. Work the solvent in again and scrub out the loose paint, working from the ferrule toward the tip of the brush. Rinse again in thinner and rinse out as much as possible. Never use paint remover as it will ruin a brush.

54.4 SPRAY PAINTING.

Spray painting is perhaps the most convenient method of applying paint to any given surface. There are no brushes to clean and no paint to mix or stir. Just a shake of the aerosol can and the pressing of the paint release button accomplishes the painting task. To better understand how to use a spray paint, a brief description of its operation is necessary.

54.4.1 Aerosol Can Operation. Spray cans (Figure 54-1) contain about 50 percent paint; the remainder of the contents is a liquid gas. This liquid gas is mixed with the paint and is the propellant that forces the paint from the can.

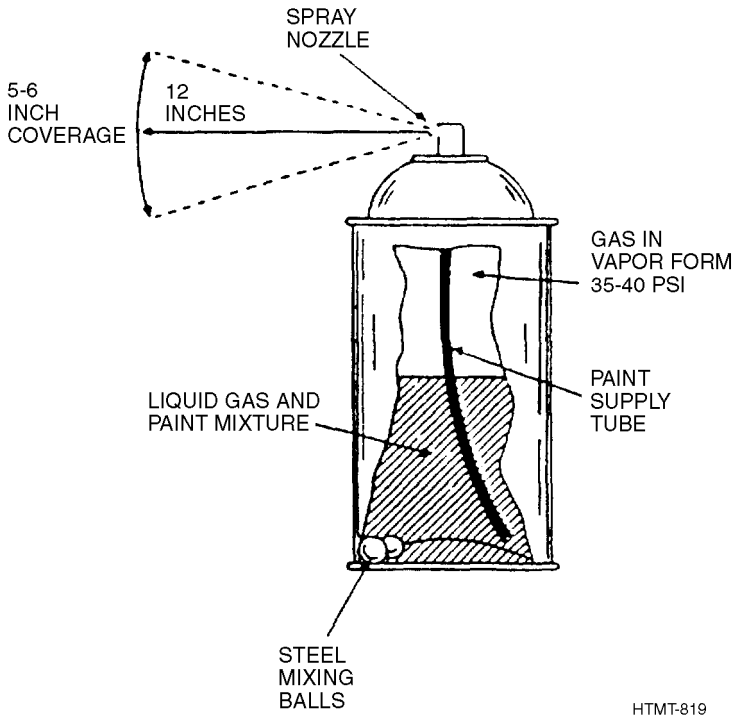

Figure 54-1. Aerosol Spray Can

54.4.2 Using Aerosol Paint. Prior to using a spray paint, always read the manufacturer's instructions which will usually provide all the information necessary. To assure even color and a smooth spray, shake the can to mix the paint. The majority of spray cans contain several steel balls that, when agitated, mix the paint. A good indication of complete mixing of the paint is the sound of the steel balls moving freely within the can. If the paint is not completely mixed, the sound will be somewhat muffled. When the paint is first removed from stock, continue to agitate the can for a few minutes after hearing the steel balls to insure a complete mixture of the pigment.

Before spraying the desired surface, spray some paint on a piece of paper or scrap material. A can that has been standing for a period of time may give an intermittent spray for a short period of time before operating smoothly. Hold the spray can as parallel to the work as possible at a distance of approximately 12 inches. Move the spray across the area to be painted triggering the spray as it approaches the near end of the area to be painted and releasing the pushbutton as it passes beyond the far edge of the work. With the majority of paints it is best to apply two thin coats rather than one heavy coat. However, wrinkle paints must be applied in one coat. This coat must be heavy enough to cover the area and still not sag or run.

If there is paint in the can but only gas is released when the spray is triggered, it is possible that the can is being held in such a position that the paint supply tube is positioned incorrectly. To correct this, attempt to hold the can in a more vertical position or if this is not possible rotate the spray valve a slight amount. This will rotate the supply tube into the paint.

When the job is complete, clean the spray nozzle before returning the can to stock. This is accomplished by inverting the can and depressing the pushbutton until only gas is emitted from the spray nozzle.

Often the area to be painted is adjacent to a component or some surface that should not be painted. These areas should be covered before painting. A method of controlling what is painted is to use a piece of cardboard with a hole cut into it a little larger than the area to be painted. Hold the card a few inches from the surface and spray through the hole in the card.

CHAPTER 55
MISCELLANEOUS TOOLS

55.1 HOW TO CHOOSE AND USE THEM.

Types and Uses, Paragraph 55.2 provides you with a list of some of the types of miscellaneous tools. These pages should help you select the right miscellaneous tool to do the job. Using, Paragraph 55.4, tells you how to use these various tools to perform the desired function. Care of Miscellaneous Tools, Paragraph 55.7, tells you how to care for the item.

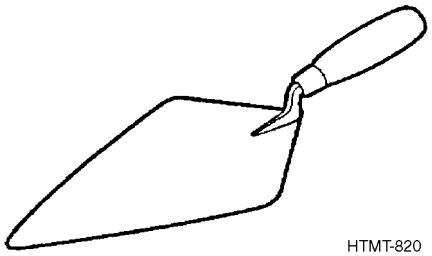

HTMT-820

55.2 TYPES AND USES.

55.2.1 Cement Trowel.

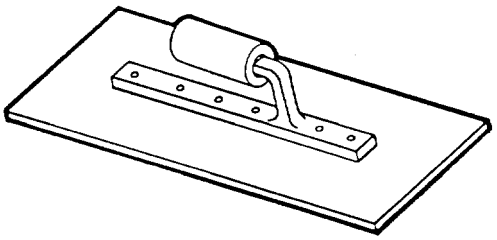

HTMT-823

The cement trowel is a flat rectangular blade fastened by a metal strap and shank to a wooden handle. It is used in concrete work for leveling, smoothing, or pushing wet cement into place.

55.2.2 Brick Trowel.

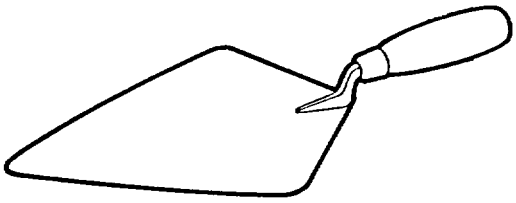

HTMT-822

This type of trowel has a pointed flat blade at one end, and a steel shank that attaches to a wooden handle at the other. The brick trowel is used to scoop and spread mortar.

55.2.3 Miner's Spoon.

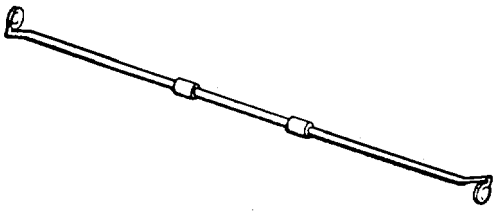

HTMT-823

The miner's spoon is used to lift material out of narrow deep holes, in order to clear for further drilling or to permit placing of explosive charges. The miner's spoon is a slender metal rod with the ends forged into small bowl-shaped projections at right angles to the rod.

55.2.4 Blocks.

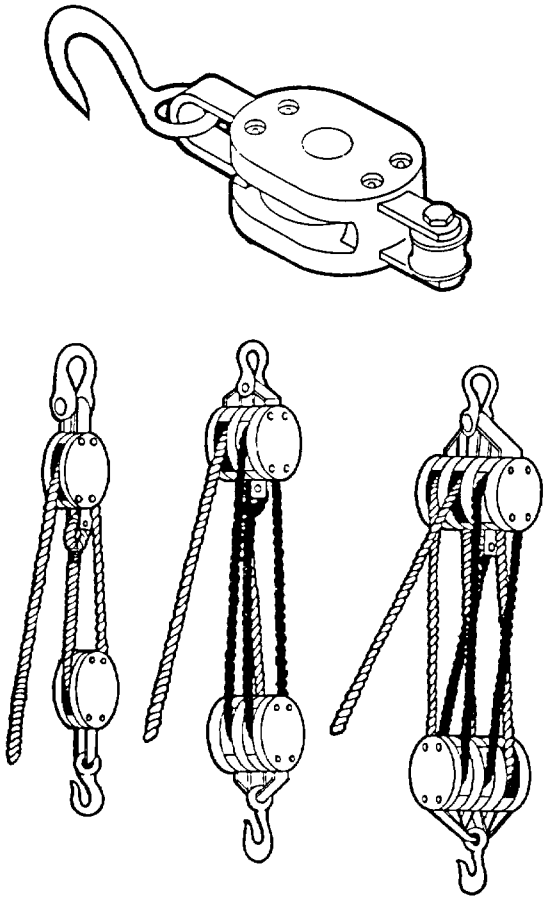

HTMT-824

Blocks are used in combination with rope and wire to hoist and move loads. The block consists of a metal shell which

supports both ends of a pin. The shell also houses a grooved pulley that revolves on the pin. Attached at one end of the first block is a freely revolving hook. Blocks may be classified as single, double, triple, etc. according to the number of pulleys housed in the shell of the block. Depending on the various combinations of blocks available to do the job, the mechanical advantage can be increased indefinitely.

55.2.5 Trip Wire Grapnel.

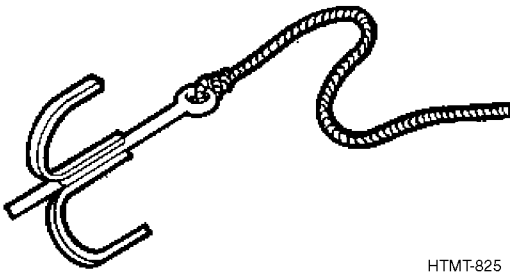

HTMT-825

The trip wire grapnel is a metal weight resembling three or four fish hooks, with a common shank ending in an eye. The hooks spread out in different directions at the other end of the shank. Attached to the eye portion of the shank is a marlin cord of varying length. The grapnel is used to trip wires designed to go off on contact, to find booby traps, or to detonate mines.

55.2.6 Chain Assembly.

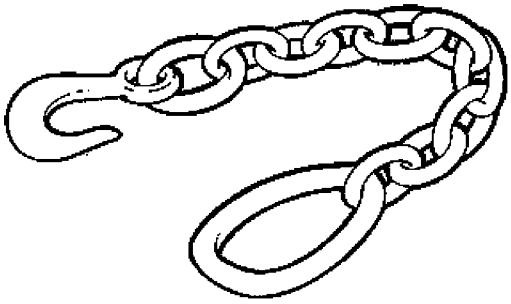

HTMT-826

The chain assembly is a heavy duty linked chain with a grab hook at one end and a ring at the other. The chain assembly is used for such applications as towing vehicles, slinging loads, and hauling objects. The chain assembly is available in a wide variety of lengths and link sizes depending on the nature of the use.

55.2.7 Cable Jaw Grip.

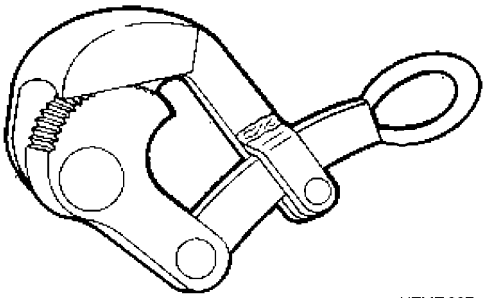

HTMT-827

The cable jaw grip is used to tighten or stretch wires or cables for various operations. Examples of application include removing kinks or bends in cables, tightening cables on loads or bales, or for cleaning and oiling of cables. Cable grips, depending on their application, vary in size and design.

55.2.8 Tension Puller.

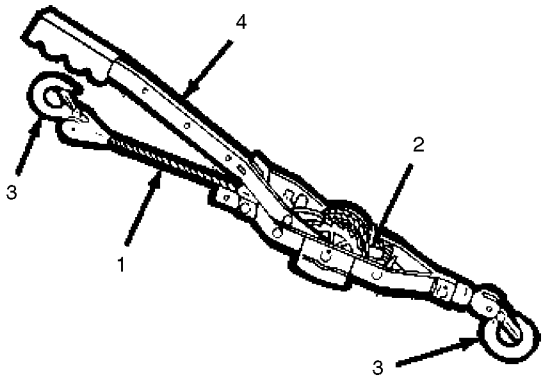

HTMT-828

Like the cable jaw grip, the tension puller is used to tighten or stretch cables. The tension puller has strong cable (1) attached to a cable notch gear (2). At the end of the cable is a hook (3). This hook (3) can be attached to the eyelet of the cable to be tightened. Tension is then applied to the cable by moving the tension handle (4) in an up and down motion.

55.3 SAFETY.

1. Wash brick trowel, thoroughly wash all mix dust from skin, and remove dusty clothing when finished. Dust ingredients can burn the skin or cause eye injury.

2. When using the tension puller, be sure the hook (or hooks) is of correct size to hold the cable snugly.

3. When swinging the trip wire grapnel, hold the rotating tool at a safe distance from the arm.

4. Be sure tackle used with blocks is safe and meets lifting requirements.

5. Use each tool only for its designated purpose.

55.4 USING THE BRICK TROWEL.

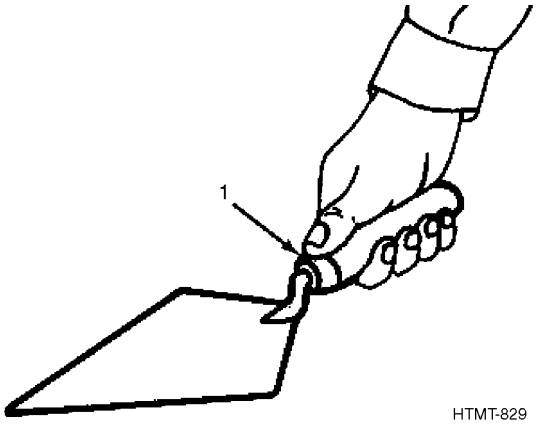

1. Hold the trowel with thumb on top of handle (1) for balance and control.

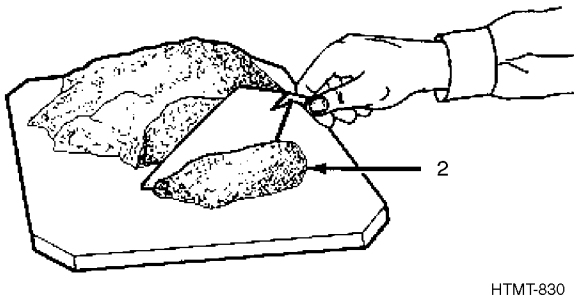

2. Slice off a trowel load of mortar (2).

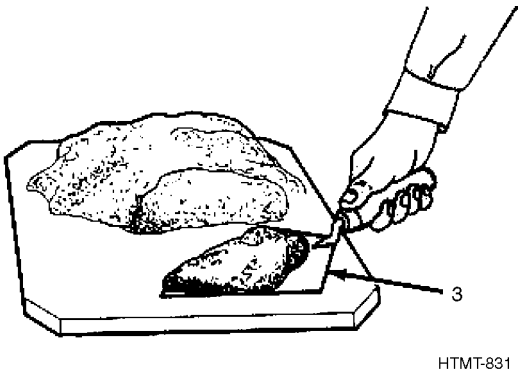

3. Slide the trowel under the mortar, seating it firmly on the blade (3) with a slight jerk of the wrist.

4. Hold the edge of the blade over the center of the work surface.

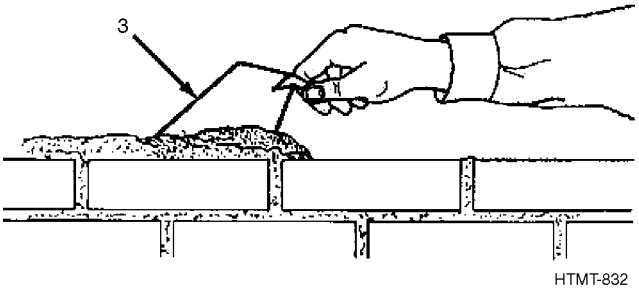

5. Move the trowel steadily backward, tilting it to slide the mortar gradually from the blade (3), leaving an even bed of mortar on the work surface.

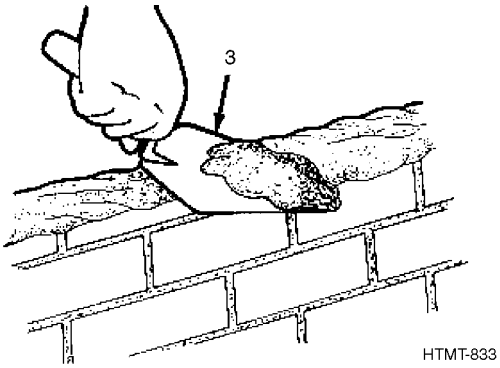

6. Cut off excess mortar after each application by holding the trowel blade (3) slightly angled against the work surface and moving forward.

NOTE

Excess mortar should be returned to mortar board or applied to any gaps or uneven areas in the mortar bed.

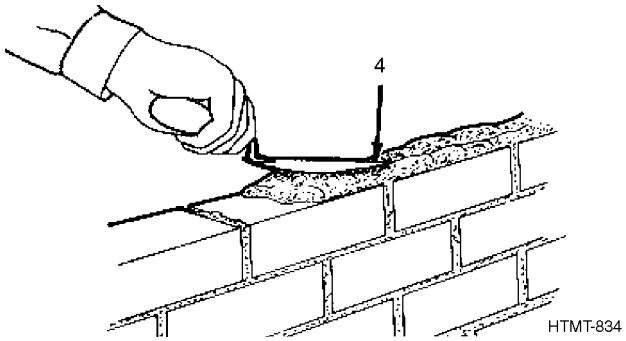

7. To allow enough movement to position bricks, groove the mortar bed with the point (4) of the trowel.

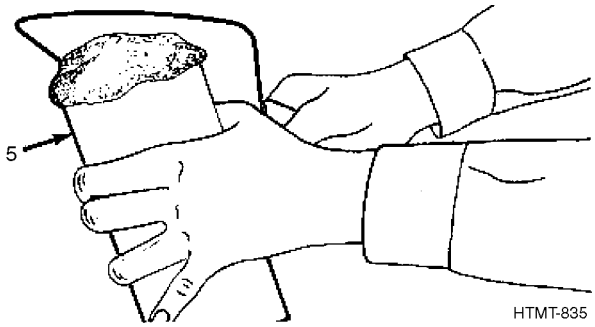

8. Using the trowel, coat the brick ends (5) with mortar before laying them in place.

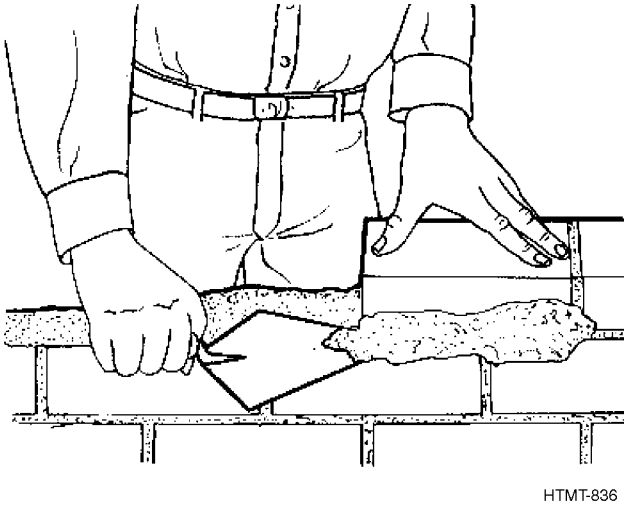

9. Cut off any excess mortar.

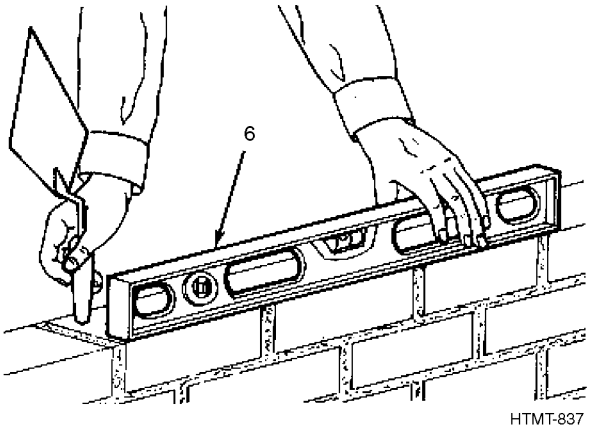

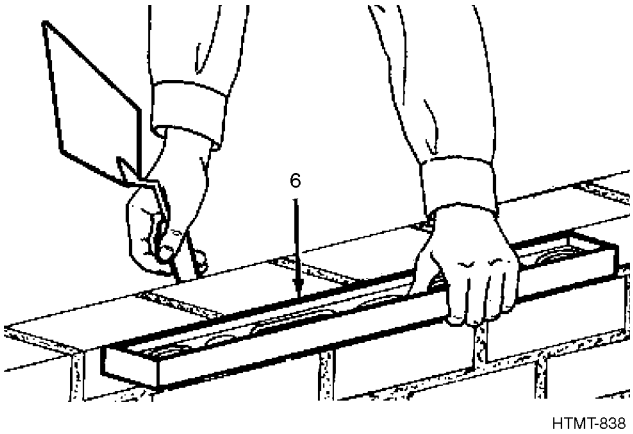

10. Lay enough bricks to cover the mortar bed and tap into line using a builder's level (6).

55.5 USING THE BLOCK.

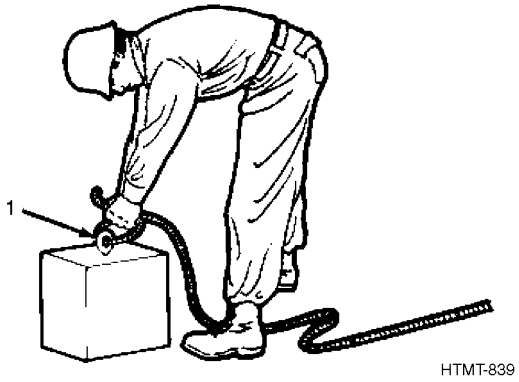

1. Secure one end of the rope or ropes to the load (1) to be moved.

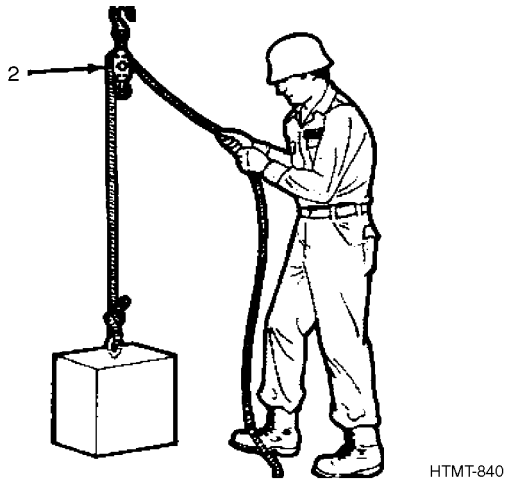

2. Pass the other end of the rope over the pulley (2) of the block attached to some type of solid support.

3. Apply the necessary manpower to the end of the rope to lift the load.

55.6 USING THE CABLE JAW GRIP AND TENSION PULLER.

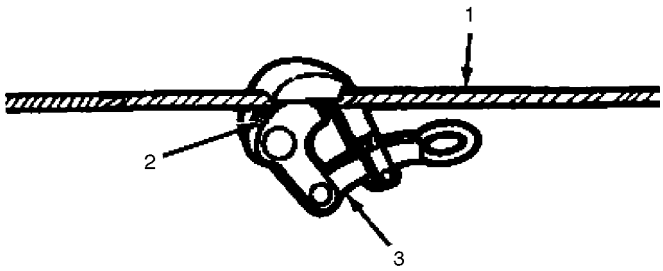

HTMT-841

1. Place end of cable (1) between jaws (2) of cable jaw grip (3) (from jaw end of tool).

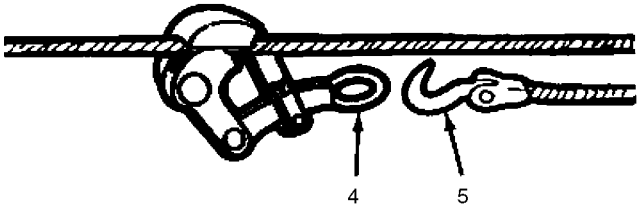

HTMT-842

2. Fasten eye (4) to tension puller hook (5).

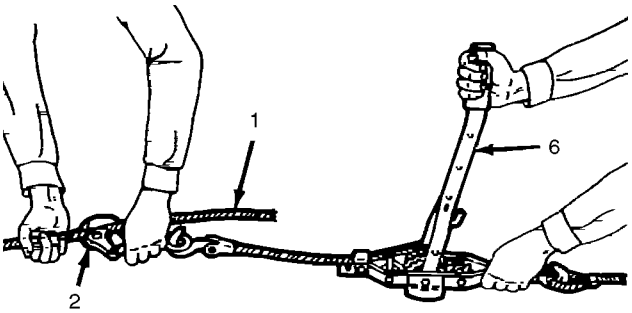

HTMT-843

3. Hold the jaws (2) together over cable (1). Apply pressure with tension puller handle (6).

4. Apply pressure until cable (1) is stretched to make the jaws (2) hold the cable firmly.

5. Continue pressure using handle of tension puller (6) until desired pressure is reached.

55.7 CARE OF MISCELLANEOUS TOOLS.

1. Clean all tools thoroughly after using.

2. Store tools in approved area to prevent damage.

3. Oil all rustable parts of tools before storing.

WARNING

Linseed oil is a flammable liquid. To avoid personal injury, properly dispose of all cleaning rags in non-combustible containers.

4. Prevent wooden parts of tools from drying out by applying linseed oil occasionally.

5. Do not use a brick trowel to pry bricks or rocks loose.

6. Never oil pulley grooves.

7. Inspect tools frequently, especially pins in blocks.

8. Never use a damaged chain assembly. Replace damaged chain links promptly.

9. Always use the proper size and design of cable jaw grips for each task. Using the wrong size or style can be dangerous.

Table 55-1. Decimal Equivalent Chart

1/64	0.0156	33/64	0.5156
1/32	0.0313	17/32	0.5313
3/64	0.0469	33/64	0.5469
1/16	0.0625	9/16	0.5625
5/64	0.0781	37/64	0.5781
3/32	0.0938	19/32	0.5938
7/64	0.1094	39/64	0.6094
1/8	0.1250	5/8	0.6250
9/64	0.1406	41/64	0.6406
5/32	0.1563	21/32	0.6563
11/64	0.1719	43/64	0.6719
3/16	0.1875	11/16	0.6875
13/64	0.2031	45/64	0.7031
7/32	0.2188	23/32	0.7188
15/64	0.2344	47/64	0.7344
1/4	0.2500	3/4	0.7500
17/64	0.2656	49/64	0.7656
9/32	0.2813	25/32	0.7813
19/64	0.2969	51/64	0.7969
5/16	0.3125	13/16	0.8125
21/64	0.3281	53/64	0.8281
11/32	0.3438	27/32	0.8438
23/64	0.3594	55/64	0.8594
3/8	0.3750	7/8	0.8750
25/64	0.3906	57/64	0.8906
13/32	0.4063	29/32	0.9063
27/64	0.4219	59/64	0.9219
7/16	0.4375	15/16	0.9375
29/64	0.4531	61/64	0.9531
15/32	0.4688	31/32	0.9688
31/64	0.4844	63/64	0.9844
1/2	0.5000	1	1.0000

Table 55-2. A.S.M.E. Standard Screws and American Wire Gauge

Number	SCREWS Outside Diameter (inches)	Threads Per inch	Gauge#	WIRE Diameter	Gauge#	Diameter
0	0.060	80	6/0	0.5800	16	0.0508
1	0.073	72, 64	5/0	0.5164	17	0.0452
2	0.086	64, 56	4/0	0.4600	18	0.0403
3	0.099	56, 48	3/0	0.4096	19	0.0359
4	0.112	48, 40, 36	2/0	0.3648	20	0.0319
5	0.125	44, 40, 36	1/0	0.3249	21	0.0284
6	0.138	40, 36, 32	1	0.2893	22	0.0253
7	0.151	36, 32	2	0.2576	23	0.0225
8	0.164	36, 32, 30	3	0.2294	24	0.0201
9	0.177	32, 30, 24	4	0.2043	25	0.0179
10	0.190	32, 24	5	0.1819	26	0.0159
12	0.216	28, 24	6	0.1620	27	0.0142
1/4	0.250	28, 20	7	0.1443	28	0.0126
5/16	0.313	24, 18	8	0.1285	29	0.0112
3/8	0.375	24, 16	9	0.1144	30	0.0100
7/16	0.438	20, 14	10	0.1019	31	0.0089
1/2	0.500	20, 12	11	0.0907	32	0.0079
			12	0.0808	33	0.0071
			13	0.0719	34	0.0063
			14	0.0640	35	0.0056
			15	0.0570	36	0.0050

Table 55-3. Numbered Twist Drills

Drill No.	Diameter in inches	IBM Part Number	Drill No.	Diameter in inches	IBM Part Number	Drill No.	Diameter in inches	IBM Part Number
1	0.2280	3287641	21	0.1590	3287661	41	0.0960	3287681
2	0.2210	3287642	22	0.1570	3287662	42	0.0935	3287682
3	0.2130	3287643	23	0.1540	3287663	43	0.0890	3287683
4	0.2090	3287644	24	0.1520	3287664	44	0.0860	3287684
5	0.2055	3287645	25	0.1495	3287665	45	0.0820	3287685
6	0.2040	3287646	26	0.1470	3287666	46	0.0810	3287686
7	0.2010	3287647	27	0.1440	3287667	47	0.0785	3287687
8	0.1990	3287648	28	0.1405	3287668	48	0.0760	3287688
9	0.1960	3287649	29	0.1360	3287669	49	0.0730	3287689
10	0.1935	3287650	30	0.1285	3287670	50	0.0700	3287690
11	0.1910	3287651	31	0.1200	3287671	51	0.0670	3287691
12	0.1890	3287652	32	0.1160	3287672	52	0.0635	3287692
13	0.1850	3287653	33	0.1130	3287673	53	0.0595	3287693
14	0.1820	3287654	34	0.1110	3287674	54	0.0550	3287694
15	0.1800	3287655	35	0.1100	3287675	55	0.0520	3287695
16	0.1770	3287656	36	0.1065	3287676	56	0.0465	3287696
17	0.1730	3287657	37	0.1040	3287677	57	0.0430	3287697
18	0.1695	3287658	38	0.1015	3287678	58	0.0420	3287698
19	0.1660	3287659	39	0.0995	3287679	59	0.0410	3287699
20	0.1610	3287660	40	0.0980	3287680	60	0.0400	3287700

Table 55-4. Fractional Twist Drill Sizes

Drill No.	Diameter in inches	IBM Part Number	Drill No.	Diameter in inches	IBM Part Number	Drill No.	Diameter in inches	IBM Part Number
1/32	0.0313	3287610	13/64	0.2031	3287621	3/8	0.3750	3287632
3/64	0.0469	3287611	7/32	0.2187	3287622	25/64	0.3906	3287633
1/16	0.0625	3287612	15/64	0.2344	3287623	13/32	0.4062	3287634
5/64	0.0781	3287613	1/4	0.2500	3287624	27/64	0.4219	3287635
3/32	0.0937	3287614	17/64	0.2656	3287625	7/16	0.4375	3287636
7/64	0.1094	3287615	9/32	0.2812	3287626	29/64	0.4531	3287637
1/8	0.1250	3287616	19/64	0.2969	3287627	15/32	0.4687	3287638
9/64	0.1046	3287617	5/16	0.3125	3287628	31/64	0.4844	3287639
5/32	0.1562	3287618	21/64	0.3281	3287629	1/2	0.5000	3287640
11/64	0.1719	3287619	11/32	0.3437	3287630			
3/16	0.1875	3287620	23/64	0.3594	3287631			

Table 55-5. Tap, Tap Drill, and Clearance Drill Sizes

Tap Size	No. of Threads	** Type	Part No.	*Tap Drill	Clear Drill
2	56	B	3034715	51	43
3	48	B	3034731	48	38
4	36	B	3034718	45	32
4	40	B	3034730	43	32
5	40	B	3034729	39	30
6	32	B	3034728	36	27
6	40	B	3034719	33	27
8	32	B	3034726	29	18
8	40	B	3034720	28	7/32
10	24	B	3034721	25	9
10	30	B	3034722	22	9
1/4	28	B	3034717	3	17/64
5/16	32	B	3287787	9/32	23/64
1/4	20	B	3287777	7	17/64
3/8	24	B	3287779	21/64	25/64
10	32	B	3034748	21	9
12	24	B	3034712	17	1
14	24	B	3034716	10	17/64
1/4	20	B	3287768	7	17/64
1/4	24	B	3034713	5	17/64
5/16	18	B	3287769	1/4	21/64
5/16	24	B	3287778	17/64	11/32
3/8	16	B	3287770	5/16	25/64

* Approximately 75% Full Thread
** B = Bottoming

Table 55-6. Screw Extractors

IBM Part Number	Bolt Sizes	Drill Size
3034583	3/16 - 1/4	5/64
3034584	1/4 - 5/16	7/64
3034585	5/16 - 7/16	5/32
3034586	7/16 - 9/16	1/4
3034587	9/16 - 3/4	17/64

Table 55-7. Taper Reamers

Reamer Size	Diameter (inches) Large	Small	Part No.
7/0	0.0666	0.0497	3287738
6/0	0.0806	0.0611	3287739
5/0	0.0966	0.0719	3287740
4/0	0.1142	0.0869	3287741
3/0	0.1302	0.1029	3287742
2/0	0.1462	0.1137	3287743
0	0.1638	0.1287	3287744
1	0.1798	0.1447	3287733
2	0.2008	0.1605	3287734
3	0.2294	0.1813	3287735
4	0.2604	0.2071	3287736
5	0.2994	0.2409	3287737
11/16	0.6875	0.5313	3355707

Table 55-8. Extension Taper Reamers

Reamer Size	Part No.	Reamer Size	Part No.
5/0	3033392	2	3033394
3/0	3033391	3	3033395
2/0	3033390	4	3033396
0	3033389	5	3033397
1	3033393		

Table 55-9. Open End Wrenches
F. E. Tool Kit

Size	Part No.
3/16 - 7/32	3287801
7/32 - 1/4	3287802
1/4 - 5/16	3287803
5/16 - 11/32	3287805
3/8 - 7/16	3287804
1/2 - 9/16	3033374

Kit Part No. 3134914

Size	Part No.	Size	Part No.
1/4 - 5/16	3135017	3/4 - 7/8	3135026
5/16 - 3/8	3135018	7/8 - 15/16	3135027
3/8 - 7/16	3135019	15/16 - 1	3135028
7/16 - 1/2	3135020	1 - 1 1/8	3135029
1/2 - 9/16	3135021	1 1/16 - 1 1/8	3135030
9/16 - 5/8	3135022	1 1/16 - 1 1/4	3135031
5/8 - 3/4	3135024	19/32 - 11/16	3135023
		25/32 - 13/16	3135025

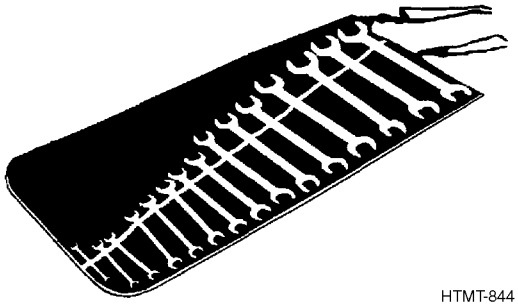

Table 55-10. Adjustable and Ratchet Wrenches

Adjustable		Ratchet	
Size	Part No.	Size	Part No.
8 in. *	3033367	10 in. **	3134925
10 in.	3287798	15 in. **	3134926

* F. E. Tool Kit
** Kit Part No. 3134945

Table 55-11. Box Wrenches
F. E. Tool Kit

Size	Part No.
5/16 - 3/8	3033380
7/16 - 1/2	3287799
9/16 - 5/8	3287800

Kit Part No. 3034860

Size	Part No.	Size	Part No.
3/8 - 7/16	3034849	15/16 - 1	3034854
7/16 - 1/2	3034850	1 - 1 1/8	3034858
1/2 - 9/16	3034852	1 1/16 - 1 1/4	3034859
9/16 - 5/8	3034951	19/32 - 11/16	3034855
5/8 - 3/4	3034856	25/32 - 13/16	3034857
3/4 - 7/8	3034853		

Table 55-12. Sockets

Size	Part No.	Size	Part No.
3/16	3287755	3/8	3287759
7/32	3287756	7/16	3033369
1/4	3287757	1/2	3287760
5/16	3287758	9/16	3033370

1/4 inch drive required for these sockets

Kit Part No. 3134945*

Size	Part No.	Size	Part No.
1/2	3134932	15/16	3134939
9/16	3134933	1	3134940
5/8	3134934	11/16	3134941
11/16	3134935	11/8	3134942
3/4	3134936	13/16	3134943
13/16	3134937	11/4	3134944
7/8	3134938		

* 1/2 inch drive required for these sockets

Kit Part No. 3134951*

Size	Part No.	Size	Part No.
1/4	3135001	7/16 ***	3135016
9/32 **	3135013	1/2	3135006
5/16	3135002	9/16	3135007
5/16 ***	3135014	5/8	3135008
11/32	3135003	11/16	3135009
3/8	3135004	3/4	3135010
3/8 ***	3135015	25/32	3135011
7/16	3135005	13/16	3135012

* 3/8 inch drive required for these sockets
** 4 point socket
*** 8 point socket
11/32 - Part No. 3034842, 1/4 inch drive required.

Table 55-13. Socket Handles and Extensions F. E. Tool Kit

Type	Part No.
Socket Wrench Handle	3287722
Tee	3287723

Kit Part No. - 3134945

Type	Part No.
Sliding Tee	3134927
Extension (3-1/2 inch)	3134928
Extension (5 inch)	3134929
Extension (10 inch)	3134930

Kit Part No. - 3134945

Kit Part No. - 3134951

Type	Part No.
Flexible Hinge	3134947
Sliding Tee	3134948
Extension (3 inch)	3134949
Extension (6 inch)	3134950

Table 55-14. Hex and Fluted Wrenches

PART NUMBER	FLAT WIDTH A		LENGTH B	LENGTH C	USED ON SCREWS	
	MAX	MIN	SHORT	LONG	SET	CAP
3034746	0.035	0.0345	7/16	3	#1, #2	
3287813	0.050	0.049	9/16	3	#3, #4	#0, #1
3287810	1/16	0.062	9/16	3-21/64	#5, #6	#2
3287812	5/64	0.077	45/64	3-3/16	#8	#3, #4
3287811	3/32	0.093	3/4	3-7/16	#10, #12	#5, #6
3287814	1/8	0.124	27/32	3-27/32	1/4	#8
3034601	5/32	0.155	15/16	3-15/16	5/16	#10, #12
3287816	3/16	0.186	1-1/32	2-27/32	3/8	1/4
3287817	7/32	0.217	1-1/8	3-3/32	7/16	5/16
3287818	1/4	0.2485	1-7/32	3-11/32	1/2, 9/16	
3287819	5/16	0.311	1-11/32	3-27/32	5/8	3/8, 7/16
3034724	3/8	0.374	1-15/32	4-11/32	3/4	1/2, 9/16

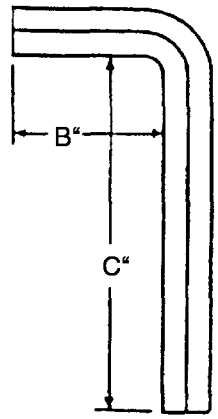

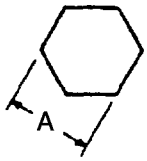

NOTE

DIMENSIONS "B" & "C" ARE APPROXIMATE & ARE FOR REFERENCE ONLY.

PART NUMBER	NO. OF FLUTES	DIAMETER A		SHORT LENGTH B	LONG LENGTH C
		MAX	MIN		
303382	4	0.069	0.068	9/16	3-3/8
3033456	4	0.076	0.075	21/32	3-3/32
3033387	4	0.094	0.093	45/64	3-21/64
3034723	4	0.125	0.124	7/8	3-27/32
3033457	6	0.060	0.059	7/16	3
3287807	6	0.094	0.093	45/64	3-21/64
3287808	6	0.110	0.109	3/4	3-31/64
3287809	6	0.144	0.143	27/32	2-27/64

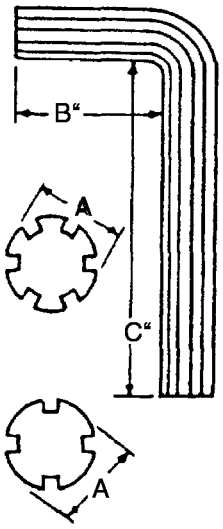

HTMT-845

Table 55-15. Chassis Punches

	Type	Part No.
1/2	Round	3355110
5/8	Round	3034778
11/16	Round	3034779
3/4	Round	3034780
13/16	Round	3355376
7/8	Round	3355223
1	Round	3034781
1 1/16	Round	3034782
1 1/8	Round	3034783
1 5/32	Round	3034784
1 11/64	Round	3034785
1 3/16	Round	3034786
1 1/4	Round	3355109
1 3/8	Round	3034787
1 1/2	Round	3034788
1 5/8	Round	3034789
1 3/4	Round	3034790
1 7/8	Round	3034791
2	Round	3034792
1/2	D	3034794
5/8	D	3034795
2 1/4	Round	3034793

Table 55-16. Lug and Crimping Tools

LUG						TOOL			
Type	Wire Size	Stud Size	Manuf. Part No.	IBM Part No.	Photo Ref.	Manuf. Part No.	IBM Part No.	Photo Ref.	Comments
Butt Connector	26-22		Amp 321029	3002913	18	Amp 48518	3033463	62	
	22-16		Amp 320559	3099830	59	Amp 49556	3033461	63	
	16-14		Burndy YSE 14H	3004933	20	Burndy MR8-33S	3033472	64	
	16-14 12-10		Amp 320562 Amp 320570	3097800 3097801	57 58	Amp 49864 Amp 59062	3033464 3033467	65 62	
Contact Tip	20-18		Burndy AYH 14H1	3025281	22	Burndy Y 14 MRC	3033470	66	
	16-12		Burndy AYH 12-14H1	3025139	21	Burndy Y 14 MRC	3033470	66	
Crabloc Tip	10		Burndy AYH 10	3004539	17	Burndy Y 8 MC	3033869	67	
	8		Burndy AYH 8C	3004538	16	Burndy Y 8 MC	3033869	67	
Ferrule	coax cable Type 1 3001953		T & B GSC 149	3004072	12	T & B WT201-02-03			
			T & B GSB 090	3004071	11		3033478	68	
	coax cable Type 2 3001955		T & B GSC 156	3002911	6	T& B WT201-02-03			
			T & B GSB 101	3002908	4		33033478	68	
	coax cable Type 3 3001954		T & B GSC 187	3002912	7	T & B WT 206			
			T & B GSB 124	3002909	5		3033459	69	
			T & B GSC 219	3004157	15	T & B WT 208-11			
			T & B GSC 134	3004156	14		3033868	70	
			T & B GSC 287	3061094	39	T & B WT 214			
			T & B GSB 194	3061093	38		3033458	71	

Table 55-16. Lug and Crimping Tools - Continued

LUG						TOOL			
Type	Wire Size	Stud Size	Manuf. Part No.	IBM Part No.	Photo Ref.	Manuf. Part No.	IBM Part No.	Photo Ref.	Comments
Ferrule (Cont.)	coax cable type 4 3212391		T & B GSB 312	3004931	19	T & B WT 235	3033867	70	
			T & B GSB 205	3004761	18				
			T & B GSC 327	3212121	61	T & B WT 235	3033867	70	
			T & B GSB 261	3004075	13				
Parallel Connector	16-14		Amp 34137	3003820	10	Amp 49900	3033483	62	
Plug	22-18		Hubble K-1121-B	3003666	9	Hubble 120Y-91	3033477	72	
Ring	22-16	#3 & 4	Amp 31878 loose Amp 41548 roll	3061071	35	Amp 49556	3033461	63	
Tongue		# 3 & 4	Burndy YAE-18-N17 loose SE-18-N17 roll	3061071	35	Burndy MR8-33S	3033472	64	
Terminal		#4, 5, 6	Burndy YAE-18-G43 loose SE-18-G43-roll	3002876	2	Burndy MR8-33S	3033472	64	
		#6	Amp 31879 loose Amp 41170 roll	3061003	24	Amp 49556	3033461	63	
		#6	Amp 34110	3061072	36	Amp 49900	3033483	62	
		#8	Amp 31888 loose Amp 41102 roll	3061018	27	Amp 49556	3033461	63	
		#8	Burndy YAE-18-N1 loose SE-18-Nl-roll	3061018	27	Burndy MR8-33S	3033472	64	
		#10	Amp 31889 loose Amp 41103 roll	3061001	23	Amp 49556	3033461	63	
		#10	Burndy YAE-18-N loose SE-18-N roll	3061001	23	Burndy MR8-33S	3033472	64	

Table 55-16. Lug and Crimping Tools - Continued

LUG						TOOL			
Type	Wire Size	Stud Size	Manuf. Part No.	IBM Part No.	Photo Ref.	Manuf. Part No.	IBM Part No.	Photo Ref.	Comments
Ring	22-16	1/4”	Amp 31892 loose Amp 41172 roll	3061921	44	Amp 49556	3033461	63	
Tongue		1/4”	Burndy YAE-18-N2 loose SE-18-N2 roll	3061921	44	Burndy MR8-33S	3033472	64	
Terminal	16-14	#6	Amp 31898 loose Amp 41105 roll	3061005	25	Amp 49557 or Amp 49864	3033466 or 3033464	62 65	
		#10	Amp 31900 loose Amp 41107 roll	3061006	26	Amp 49557 or Amp 49864	3033466 or 3033464	62 65	
		#10	Burndy YAE-14-N loose SE-14N roll	3061006	26	Burndy MR8-33S	3033472	64	
		1/4”	Amp 31904	3061025	31	Amp 49557 or Amp 49864	3033466 or 3033464	62	
	14	#6	Amp 32440 loose Amp 41314 roll	3061023	29	Amp 49557 or Amp 49864	3033466 or 3033464	62 65	
		#6	Burndy YAE-14-N43 loose SE-14-N43 roll	3061023	29	Burndy MR8-33S	3033472	64	
		#8	Amp 31899 loose Amp 41106 roll	3061020	28	Amp 49557 or Amp 49864	3033466 3033464	62 65	
		#8	Burndy YAE-14-N1 loose SE-14-N1 roll	3061020	28	Burndy MR8-33S	3033472	64	
	12-10	#6	Amp 32542 loose Amp 41050 roll	3061899	42	Amp 59062	3033467	62	
		#8	Amp 32543 loose Amp 41051 roll	3061948	48	Amp 59062	3033467	62	
		#10	Amp 32544 loose Amp 41052 roll	3061900	43	Amp 59062	3033467	62	
		1/4”	Amp 32545	3061024	30	Amp 59062	3033467	62	

Table 55-16. Lug and Crimping Tools - Continued

LUG						TOOL			
Type	Wire Size	Stud Size	Manuf. Part No.	IBM Part No.	Photo Ref.	Manuf. Part No.	IBM Part No.	Photo Ref.	Comments
Terminal (Cont.)		3/8”	Amp 32547	3061089	37	Amp 59062	3033467	62	
	8	#8-10	Burndy YAV8CRS	3061896	41	Burndy MY29	3033471	73	
Ring	6	1/4”	Burndy YA-6C-L	3061928	45	Burndy MY29	3033471	73	
	4	#8-10	Burndy YAV4C-RS3	3061894	40	Burndy MY29	3033471	73	
Tongue	4	1/4”	Burndy YAV4C-RS	3061026	32	Burndy MY29	3033471	73	
Terminal	4	1/4”	Burndy YA-4C-L	3061929	47	Burndy MY29	3033471	73	
	2	1/4”	Burndy YA-2C-L2	3061930	46	Burndy MY29	3033471	73	
	2	5/16”	Burndy YA-2C-L	3061069	33	Burndy MY29	3033471	73	
	1	5/16”	Burndy YA25-L	3061070	34	Burndy MY29	3033471	73	
	1/0	3/8”	Burndy YA-25-L4	3061944	49	Burndy MY29	3033471	73	
	2/0	3/8”	Burndy YA-26-L	3061945	50	Burndy MY29	3033471	73	
Taper	26-22		Amp C-41278	3090156	51	Amp 48698	3033479	62	
Pin	22		Amp 42153-1	3208057	60	Amp 47745	3034146	74	
	22-18		Amp 42031-0	302762	1	Amp 47450	3033468	62	
	22-18		Amp C-41650	3095837	53	Amp 47043	3033480	62	
	20-16		Amp 41608	3002877	3	Amp 47194	3033462	62	
	18-16		Amp 42147-1	3097086	55	Amp 47194	3033462	62	
	16		Amp C-41656	3095836	52	Amp 47044	3033482	62	
	16-14		Amp 42090-1	3096435	54				
	16-14		Amp C-42148-1	3097087	56	Amp 47745	3034146	74	

CHAPTER 56
PNEUMATIC RATCHETS

56.1 AIR RATCHETS MODEL NUMBERS FAR70C AND 72B.

a. Purpose of Air Ratchets: Designed for a wide variety of uses including automotive, truck, aircraft and jet engine repairs. Pneumatic air ratchets increase production and reduce time and manpower. Although there are a number of pneumatic air ratchets, we will only discuss the use and care of the Snap-On FAR70C 3/8 inch drive and FAR72B air ratchets (see Figure 56-1). For additional information on pneumatic air ratchets, refer to the particular manufacturer's users manual.

b. The following warning and cautions must be adhered to:

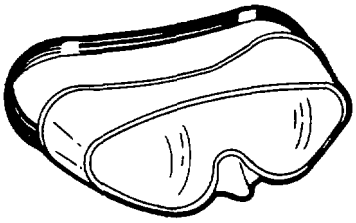

WARNING

Always wear approved eye protection when using air tools. Due to the high torque output on some air ratchets and resultant reaction force at the handle of these units, make sure you have a firm grip on the handle and never point exhaust outlets at people or near any flame when lubricating.

CAUTION

- If a socket extension is used, align the head of the ratchet so that the socket stays squarely on the fastener being turned.
- When tightening fasteners, final tightening must be done with a nonelectric/non-pneumatic torque wrench set at the applicable torque setting to prevent over torquing and/or damage to the fasteners.
- Always keep air tools well lubricated to maintain proper operation.

c. Description and Use:

(1) APPLICATION: The FAR70C and the FAR72B air ratchets are rugged, variable speed, reversible tools that can speed up and ease the removal and the installation of most automotive and aviation fasteners. The lower torque (120 inch-pounds) FAR70C ratchet is designed for lighter duty jobs found on most assembly line, automotive repair and aviation repair work. The higher torque (60 foot-pounds) FAR72B ratchet is ideal where stubborn rusty fasteners are encountered.

(2) AIR COMPRESSOR: The air ratchets should be operated with clean, moisture free, well lubricated air at a constant pressure of 90 PSI. The air compressor should have sufficient capacity to deliver 2.0 CFM (FAR70C) for 2.7 CFM (FAR72B) at 90 PSI at each ratchet outlet while the tool is running. The receiver tank should have sufficient capacity to provide surge balance for each ratchet.

(3) FILTER: Water, dirt and scale act as abrasives which could damage the air ratchet. A filter unit should be installed between the compressor and the air regulator and air lubricator.

(4) AIR REGULATOR: Regulated air pressure is necessary for proper operation of the air ratchet. Adjust pressure regulator to the recommended air pressure of 90 PSI. Pressure less than this reduces efficiency, while pressure greater than this increases torque and speed beyond the rated capacity creating potential hazards and possible damage to the ratchet.

(5) AIR RATCHET LUBRICATION: The preferred method of lubricating the air ratchet motor is to use an air line lubricator. Contact the air ratchet manufacturer for more details. If an air line lubricator is not used, lubricate the air motor by injecting approximately 6 or 7 drops of Snap-On IM6 air motor oil into the air inlet of the air ratchet each day before using. Run the air ratchet for one minute while covering the exhaust ports in the muffler with a rag to prevent the spraying of an oil mist.

(6) ATTACHING AIR SUPPLY: Before connecting the air hose to the source of supply, always blow out the air line to prevent dirt or moisture from getting into the air ratchet. Since the ratchet handle is made of aluminum, be careful not to strip the threads in the air inlet when attaching a hose or coupler to the ratchet.

(7) TRIGGER-REGULATOR VALVE: The variable speed push-button controls the air flow valve which regulates the power and speed of the ratchet. This provides for variable low speed control with feathering ability and progressive high speed control for the high torque requirements. The distance of pushbutton movement directly controls the air flow to the air motor.

(8) REVERSE MECHANISM: The direction of rotation is determined by the position of the reverse lever in the ratchet head. Turning it counterclockwise makes the ratchet turn clockwise and vice versa.

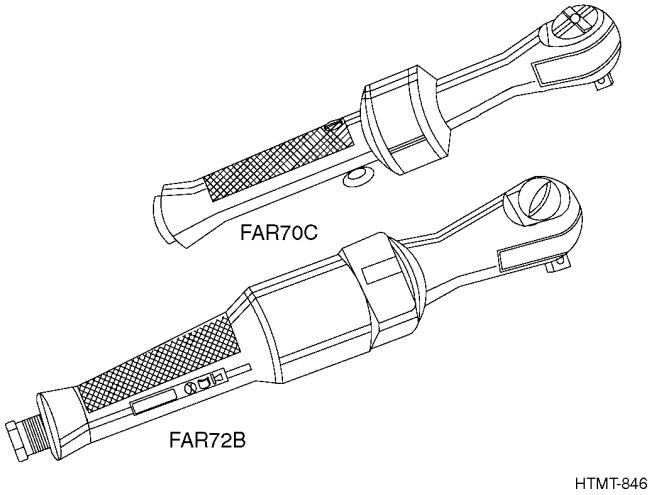

Figure 56-1. Snap-On Air Ratchets

APPENDIX A
REFERENCES

A.1 PUBLICATION INDEXES.

The following indexes should be consulted frequently for latest changes or revisions of references given in this appendix and for new publications relating to material covered in this manual.

DA Pam 106-1 ..... Index of Army Motion Pictures and Related Audio-Visual Aids

Military Publications:
- DA Pam 310-1..... Consolidated Index of Army Publications and Blank Forms
- DA Pam 750-10..... U.S. Army Equipment Index of Modification Work Orders

A.2 SUPPLY CATALOGS.

Class 5110, 20 IL ..... Class 5110 Hand Tools Non-edged, Nonpowered 5120

SC 9100 IL..... Fuels, Lubricants, Oils and Waxes

SC 5130, 33, 36, 40, 80 IL ..... Hand Tools, Power Driven, 5130; Drill Bits, Counterbores, and Countersinks: Hand and Machine, 5133; Taps, Dies and Collets: Hand and Machine, 5136; Tools and Hardware Boxes, 5140; and Sets, Kits, and Outfits of Handtools

SC 5345, 50 IL..... Hardware and Abrasives; Disks and Stones, Abrasive

SC 5200 IL..... Measuring Tools

SC 3400 IL..... Metalworking Machinery

SC 3200 IL..... Woodworking Machinery and Equipment

A.3 FORMS.

DA Form 2028..... Recommended Changes to Technical Publications and Blank Forms

A.4 OTHER PUBLICATIONS.

The following explanatory publications contain information pertinent to this material and associated equipment.

TM 36-750 ..... The Army Maintenance Management System (TAMMS)

FM 434..... Common Wood and Metal Repair

AR310-5..... Dictionary of United States Army Terms (TC 21-5-7)

FM 9-24 ..... Fundamentals of Machine Tools

FM 43-2 ..... Metal Body Repair and Related Operations

FM 21-30 ..... Military Symbols AFM 55-3

AR 310-50..... Military Terms, Abbreviations, and Symbols: Authorized Abbreviations and Brevity Codes

FM 43-3 ..... Shop Mathematics

Safety:
- AR 385-40..... Accident Reporting and Records

INDEX

Subject	Paragraph, Figure, Table Number
A	
Adjustable Parallel	9-1
Adz	45-2
Angle Plates	9-2
Auger, Post Hole	51-1
Awls	31-1
Saddler's	31-1
Scratch	31-1
Axes	45-1
Crash	45-1
Double-Bit	45-1
Half-Hatchet	45-1
Single-Bit	45-1
B	
Bars	42-1
Combination	42-1
Crowbar	42-1
Pinch	42-1
Wrecking	42-1
Bearing and Bushing Puller, Universal	41-1
Bearing Puller, Electrical Unit	41-1
Benders	40-1
Hand Tube	40-1
Electrical Conduit Hand	40-1
Spring Tube	40-1
Bevel Protractor	13-3
Blocks	55-1
Bolt and Cable Cutters	32-1
Angular Cut	32-2
Center Cut	32-1
Clipper Cut	32-2
Safety	32-2
Shear Cut, Flat Bar, and Strip	32-2
Shear Cut Cable	32-2
Side Nut Splitter	32-2
Brush-Cutting Tools	47-1
Brush Hook	47-1
Machete	47-1
C	
Cable Jaw Grip	55-2
Calipers	6-1
Hermaphrodite	6-2
Simple	6-1
Slide	6-3
Spring-Joint	6-2
Trammels	6-4
Transfer	6-2
Vernier	6-3
Care of	
Awls	31-2
Bars	42-2
Bench Grinders	29-5
Benders	40-3
Bolt and Cable Cutters	32-3
Brush-Cutting Tools	47-2
C-Clamps	19-2
Calipers	6-5
Chisels	26-5
Chopping Tools	45-5
Climbing Tools	49-4
Digging Tools	51-4
Dividers	5-2
Electric Power Tools	52-16
Files	28-4
Gage Blocks	15-8
Gasket Cutters	44-2
Glass Cutters	33-3
Grinders and Sharpening Stones	29-5
Hammers	21-11
Hand Screw Clamps	19-3
Inserted Face Hammer	21-12
Jacks	20-6
Knives	34-3
Manual Drills	23-3
Mattocks	43-2
Micrometers	7-5
Miscellaneous Measuring Gages	16-7

Subject	Paragraph, Figure, Table Number
C (CONT)	
Miscellaneous Measuring Tools	9-2
Miscellaneous Tools	55-5
Pipe Cutters and Threading Sets	35-6
Planes	50-3
Pliers and Tongs	17-5
Plumb Bobs	11-5
Pullers	41-4
Punches	27-6
Reamers	39-3
Ring and Snap Gages	15-8
Rules and Tapes	8-3
Saws	46-6
Scrapers	30-2
Screw and Tap Extractors	24-2
Screwdrivers	22-6
Scribers	12-2
Sharpening Stones	29-6
Shears and Nippers	37-3
Snap Gages	15-8
Squares	13-6
Surface, Height, and Depth Gages	14-4
Taps and Dies	38-6
Timber Handling Tools	48-2
Tube Cutters and Flaring Tools	36-3
Vises	18-4
Wrenches	25-15
Catapunch	27-2
Chain Assembly	55-2
Chisels	26-1
Machinist's	26-1
Rivet Buster	26-2
Track	26-2
Woodworker's	26-1
Chopping Tools	45-1
Adz	45-2
Crash Ax	45-1
Double-Bit Ax	45-1
Half-Hatchet	45-1
Single-Bit Ax	45-1
Timber Wedges	45-2
Clamps	19-1
C-Clamps	19-1
Hand Screw	19-1
C (CONT)	
Clamp Pliers	25-8
Climbing Tools	49-1
Leg Irons	49-2
Safety Belt	49-1
Safety Strap	49-2
Combination Bar	42-1
Crowbar	42-1
Cutter Set, Thread	38-3
Cutters, Pipe	35-1
Cutters, Tube	36-1
D	
Dies, Taps and	38-1
Rethreading	38-2
Round-Split Adjustable	38-3
Thread Cutter Set	38-3
Two-Piece, Collet	38-3
Digging Tools	51-1
D-Handled Shovel	51-1
Long-Handled Shovel	51-1
Posthole Auger	51-1
Posthole Digger	51-2
Disk Sander, Portable Electric	52-3
Dividers	5-1
Spring	5-1
Wing	5-1
Drill, Portable Electric	52-2
Drills, Manual	23-1
Brace	23-1
Breast	23-1
Hand	23-2
E	
Electrical Power Tools	52-1
Electric Chain Saw	52-3
Electric Impact Wrench	52-3
Portable Electric Circular Saw	52-3
Portable Electric Disk Sander	52-3
Portable Electric Drill	52-2
Portable Electric Hammer	52-2
Extractors, Screw and Tap	24-1
Screw	24-1

Subject	Paragraph, Figure, Table Number
E (CONT)	
Tap	24-1
Ear Protection	2-4
Eye Protection	2-3
F	
Factors To Consider	15-7
Files	28-1
American Pattern	28-1
Curved-Tooth	28-2
Mill	28-1
Pillar	28-1
Round	28-1
Square	28-2
Swiss Pattern	28-2
Taper	28-2
Three-Square	28-2
Warding	28-2
Flaring Tools	36-1
Folding Rules	8-2
G	
Gages	16-1
Center	16-2
Drill	16-4
Drill Point	16-4
Fillet and Radius	16-3
Height	14-2
Marking	16-4
Micrometer Depth	14-2
Ring	15-2
Rule Depth	14-1
Screw Pitch	16-2
Small Hole Gage Set	16-3
Snap	15-2
Surface	14-1
Telescoping	16-3
Thickness (Feeler)	16-1
Thread Cutting Tool	16-3
Vernier Depth	14-2
Wire	16-4
Gage Blocks	15-3
Gaging Flat Parts	15-5
Gasket Cutters	44-1
G (CONT)	
Bit Brace Circle	44-1
Circle	44-1
Heavy Duty Bench Mount	44-2
Hollow	44-1
Glass Cutters	33-1
Circle	33-1
Wheel Type	33-1
Gloves	2-4
Grapnel, Trip Wire	55-2
Grinders and Sharpening Stones	29-1
Bench	29-1
Sharpening Stones	29-2
Valve	29-2
H	
Hammers	21-1
Blacksmith's or Sledge	21-3
Bumping Body	21-2
Carpenter's	21-1
Dead Blow	21-6
Electric, Portable	52-2
Inserted Soft-Faced	21-5
Jeweler's	21-3
Lead or Copper	21-4
Machinist's Peen	21-2
Mason's	21-3
Napping	21-4
Riveting	21-4
Sawmaker's	21-4
Setting	21-4
Soft-Faced	21-4
Trimmer's	21-6
Welder's	21-6
Hacksaw	46-3
Hatchet, Half	45-1
Helmets	2-4
Holder, Magnetic Base Indicator	9-2
How To Use A Box Wrench	25-11
How To Use Precision Gage Blocks	15-6
How To Use This Manual	1-1
I	
Indicators, Speed Registering	9-2

Subject	Paragraph, Figure, Table Number
I (CONT)	
Installation of New Handle	21-14
Introduction	1-1
J	
Jacks	20-1
Hydraulic	20-2
Ratchet Lever	20-2
Screw	20-1
K	
Knives	34-1
Draw	34-2
Pocket	34-2
Putty	34-2
Rubber Cutting	34-1
Saddlers	34-1
Shop	34-2
L	
Leg Irons	49-2
Levels	10-1
Carpenter's	10-2
Iron Bench	10-1
Line	10-2
Machinist's	10-1
Master Precision	10-1
Striding	10-1
M	
Machete	47-1
Machine, Metal Shearing	37-1
Magnetic Base Indicator Holder	9-2
Mattocks	43-1
Single-Bevel and Double-Bevel	43-1
Pick-Mattock	43-1
Mallets	21-7
Carpenter's	21-6
Rawhide	21-7
Rubber	21-7
Tinner's	21-7
Manual Drills	23-1
Brace	23-1
M (CONT)	
Breast	23-1
Hand Drill	23-2
Mauls	21-7
Railroad Track	21-7
Wooden	21-7
Method of Filing	28-3
Draw Filing	28-4
Micrometers	7-1
Depth	7-1
Inside	7-1
Outside	7-1
Miner's Spoon	55-1
Miscellaneous Measuring Gages	16-1
Miscellaneous Measuring Tools	9-1
Adjustable Parallel	9-1
Angle Plate	9-2
Magnetic Base Indicator Holder	9-2
Registering Speed Indicators	9-2
V-Block and Clamp	9-1
Miscellaneous Tools	55-1
Blocks	55-2
Brick Trowel	55-1
Cable Jaw Grip	55-2
Cement Trowel	55-1
Chain Assembly	55-2
Miner's Spoon	55-1
Tension Puller	55-3
Trip Wire Grapnel	55-2
N	
Nippers	37-2
Cutting Nippers	37-2
P	
Parts of a Hammer	21-1
Peavy	48-1
Pinch Bar	42-1
Pipe Cutting and Threading Tools	35-1
Pipe Cutters	35-1
Pipe Threading Set	35-1
Planes	50-1
Bench	50-1
Block	50-1

Subject	Paragraph, Figure, Table Number
P (CONT)	
Plate, Surface	14-3
Pliers and Tongs	17-1
Diagonal Cutting	17-1
End Cutting	17-2
Flat-Nose	17-2
Lineman's Side Cutting	17-1
Parallel Jaw	17-1
Round-Nose	17-2
Slip-Joint	17-1
Straight-Lip Flat-Jaw Tongs	17-2
Wire Strippers (Multipurpose)	17-2
Wire Twister	17-3
Pliers, Clamp	25-8
Plumb Bobs	11-1
Solid Steel	11-1
Surveyor's Polished Brass	11-1
Preparing the Work Surface	22-4
Protractor, Bevel	13-3
Power Tools, Electrical	52-1
Precision Gage Blocks, How To Use	15-6
Pullers	41-1
Battery Terminal and Small Gear	41-2
Cotter Pin	41-3
Cylinder Sleeve	41-3
Electrical Unit Bearing	41-1
Gear and Bearing	41-1
Slide Hammer	41-3
Steering Gear Arm	41-2
Universal Bearing and Bushing	41-1
Universal Gear	41-1
Puller Sets	41-1
Push and Pull	41-2
Steering Wheel	41-2
Wheel Puller	41-2
Punches	27-1
Alignment	27-1
Catapunch	27-2
Center	27-1
Drift	27-1
Drive Pin	27-2
Grommet-Inserting	27-2
Lever	27-3
Metal Cutting	27-2
Prick	27-2
Sheet Metal	27-3
Starting	27-2
Tinmen's Hollow	27-3
Purpose	1-1
R	
Ratchets, Pneumatic	54-1
Reading	
Measuring Scales	3-1
Metric Caliper	6-5
Metric Micrometer	7-4
Metric Rule	3-2
Rule or Tape	3-1
Standard Micrometer	7-2
Vernier Caliper	6-4
Vernier Micrometer	7-3
Reamers	39-1
Adjustable-Blade	39-2
Expansion	39-2
Pipe	39-2
Solid Straight-Hole	39-1
Solid Taper-Pin	39-2
Registering Speed Indicators	9-2
Replacing the Handle, File	28-5
Replacing the Handle, Hammer	21-13
Ring and Snap Gages and Gage Blocks	15-1
Gage Blocks	15-3
Ring Gages	15-2
Snap Gages	15-2
Rules and Steel Tapes	8-1
Folding Rules	8-2
Rules	8-1
Steel Tapes	8-2
S	
Safety	2-1
Bars	42-1
Bolt and Cable Cutters	32-2
Brush-Cutting Tools	47-2
Chopping Tools	45-2
Climbing Tools	49-2
Digging Tools	51-2

Subject	Paragraph, Figure, Table Number
S (CONT)	
Electrical Power Tools	52-5
Equipment	2-3
Files	28-3
Hammers, Mallets, and Mauls	21-7
Jacks	20-3
Knives	34-2
Mattocks	43-1
Miscellaneous Tools	53-2
Planes	50-1
Saws	46-4
Scrapers	30-2
Screwdrivers	22-4
Shears and Nippers	37-2
Timber Handling Tools	48-1
Wrenches	25-10
Safety Belt	49-1
Safety Belts and Safety Straps	2-4
Safety Equipment	2-3
Ear Protection	2-3
Eye Protection	2-4
Gloves	2-4
Helmets	2-4
Safety Belts and Safety Straps	2-4
Safety Shoes	2-3
Safety Rules	2-1
General	2-1
Power Tools	2-3
Safety Strap	49-2
Saws	46-1
Backsaw	46-2
Compass	46-3
Electric Chain	52-3
Hacksaw	46-3
Handsaw	46-1
Keyhole	46-3
Nested	46-3
One-Man Crosscut	46-2
Portable Electric Circular	52-3
Two-Man Crosscut	46-2
Scrapers	30-1
Bearing	30-1
Box	30-1
Carbon	30-1
S (CONT)	
Flat Blade	30-2
Triangular Blade	30-2
Screwdrivers	22-1
Clutch Head	22-2
Common	22-1
Cross-Point	22-2
Cross-Tip	22-2
Flexible	22-3
Jeweler's	22-3
Offset	22-2
Radio and Pocket	22-3
Ratchet	22-3
Screwdriver Bits	22-3
Screw Starter or Gimlet	22-4
Screw and Tap Extractors	24-1
Screw	24-1
Tap	24-1
Scriber, Machinist	12-1
Selecting the Proper Micrometer	7-1
Setting, Hammer	21-4
Shears and Nippers	37-1
Cuting Nippers	37-2
Hand	37-1
Metal Shearing Machine	37-1
Nippers	37-2
Tinner's Bench	37-1
Shovels	51-1
D-Handled	51-1
Long-Handled	51-1
Soldering Tools	53-1
Spade	51-1
Spring Divider	5-1
Squares	13-1
Bevel Protractor	13-3
Carpenter's	13-1
Combination	13-2
Sliding T-Bevel	13-3
Try	13-2
Steel Tapes	8-2
Stones, Sharpening	29-2
Surface, Depth, and Height Gages	14-1
Height	14-2
Micrometer Depth	14-2

Subject	Paragraph, Figure, Table Number
S (CONT)	
Rule Depth	14-1
Surface	14-1
Surface Plate	14-3
Vernier Depth	14-2
T	
Taps and Dies	38-1
Boiler Hand Taps	38-2
Bottoming Hand	38-1
Mud Hand Taps (Washout Taps)	38-2
Pipe Hand Tap	38-1
Rethreading Die	38-2
Round Split Adjustable Die	38-3
Staybolt Taps	38-2
Taper (Starting) Hand Tap	38-1
Taps	38-2
Thread Cutting Set	38-3
Two-Piece Collet Die	38-3
Tension Puller	55-2
Timber Handling Tools	48-1
Peavy	48-1
Timber Carrier	48-1
Timber Wedges	45-2
Tool Boxes	4-1
Tool, Flaring	36-1
Tool Habits	2-1
Trammels	6-3
Trowels	53-1
Brick	53-1
Cement	53-1
Tube Cutting and Flaring Tools	36-1
Flaring Tool	36-1
Tube Cutters	36-1
U	
Using	
Adjustable Open-End Wrench	25-12
Adjustable Snap Gage	15-4
Adjustable Strap Pipe Wrench	25-12
Adz	45-4
Alignment Punch	27-5
Bearing Scraper	30-2
Bell Base Screw Jack	20-4

Subject	Paragraph, Figure, Table Number
U (CONT)	
Bench Grinder	29-3
Bench Plane	50-2
Bit Brace Circle Gasket Cutter	44-2
Block	55-5
Block Plane	50-2
Box Wrench	25-11
Brace Drill	23-2
Brick Trowel	55-3
Brush Hook	47-2
C-Clamp	19-1
Cable Jaw Grip and Tension Puller	55-5
Carpenter's Hammer	21-9
Carpenter's Square	13-3
Center Cut Cutters	32-3
Center Gage	16-5
Center Punch	27-3
Circle Gasket Cutter	44-2
Climbing Tools	49-2
Combination Bar	42-2
Combination Square	13-5
Crosscut Saw	46-4
Cutting Nippers	37-2
Diagonal Cutting Pliers	17-4
Die and Diestock	38-5
Divider	5-2
Drift Punch	27-4
Drill Gage	16-7
Drill Point Gage	16-6
Electric Chain Saw	52-14
Electrical Conduit Hand Bender	40-3
Expansive Bit	23-3
File	28-3
Fillet and Radius Gage	16-6
Flaring Tool	36-2
Gage Blocks	15-6
Gasket Cutter	44-2
Gear and Bearing Puller	41-3
Hacksaw	46-6
Hand Screw Clamp	19-2
Hand Tap	38-3
Height Gage	14-3
Hollow Gasket Cutter	44-2
Impact Wrench	52-11

Subject	Paragraph, Figure, Table Number
U (CONT)	
Inserted Face Hammer	21-8
Jeweler's Screwdriver	22-6
Keyhole Saw	46-5
Level	10-2
Lineman's Side Cutting Pliers	17-5
Long-Handled Shovel	51-2
Machinist's Ball Peen Hammer	21-11
Machinist's Bench Vise	18-3
Machinist's Cold Chisel	26-3
Machinist's Scriber	12-1
Marking Gages	16-7
Mattock	43-1
Micrometer Depth Gage	14-3
Miscellaneous Measuring Tools	9-2
Offset Ratchet Screwdriver	22-5
Offset Screwdriver	22-5
Peavy	48-2
Pipe Cutter	35-1
Pipe Threading Set	35-3
Pipe Vise	18-4
Plumb Bob	11-2
Portable Electric Circular Saw	52-12
Portable Electric Drill	52-5
Portable Electric Hammer	52-10
Portable Electric Sander	52-15
Posthole Digger	51-3
Power Torque Wrench	25-14
Precision Gage Blocks	15-6
Putty Knife	34-3
Ratchet Lever Jack	20-5
Ring Gage	15-3
Rivet Buster Chisel	26-4
Rules and Tapes Examples	8-3
Rule Depth Gage	14-3
Scratch Awl	31-1
Screwdrivers	22-4
Screw Pitch Gage	16-5
Sharpening Stone	29-5
Shovel, Long-Handled	51-2
Single-Bit Ax	45-3
Slide Hammer Puller Set	41-4
Sliding T-Bevel Square	13-4
Slip-Joint Pliers	17-3
U (CONT)	
Small Hole Gage	16-5
Socket Wrench	25-12
Solid Straight-Hole Reamer	39-2
Spade	51-3
Spanner Wrench	25-15
Spiral Ratchet Screwdriver	22-5
Spiral Tapered Screw Extractor	24-2
Surface Gage	14-3
Telescoping Gage	16-6
Thickness (Feeler) Gage	16-5
Thread Cutting Tool Gage	16-6
Timber Carrier	48-1
Timber Handling Tools	48-1
Timber Wedge	45-5
Torque Wrench	25-13
Try Square	13-4
Tubing Bender	40-2
Vernier Depth Gage	14-3
Wheel Type Glass Cutter	33-1
Wire Gage	16-7
Woodworker's Chisel	26-2
V	
V-Block and Clamp	9-1
Vises	18-1
Bench and Pipe	18-1
Clamp Base Bench	18-2
Handsaw Filing	18-2
Machine Table	18-2
Machinist's Bench	18-1
Pin	18-2
Pipe	18-2
Piston Holding	18-2
W	
Wing Divider	5-1
Wire Strippers (Multipurpose)	17-2
Wrecking Bar	42-1
Wrenches	25-1
Adjustable Open-End	25-8
Box	25-2
Clamp Pliers	25-8
Combination	25-3

Subject	Paragraph, Figure, Table Number
W (CONT)	
Crowfoot	25-7
Electric Impact	52-3
Hex Key	25-7
Monkey and Auto	25-8
Open-End	25-1
Pipe	25-8
Plug	25-7

Subject	Paragraph, Figure, Table Number
W (CONT)	
Power Torque	25-10
Special Purpose Socket	25-6
Socket	25-4
Socket Wrench Handles, Extensions and Adapters	25-4
Spanner	25-10
Torque	25-9

The Metric System and Equivalents

LINEAR MEASURE
1 Centimeter = 10 Millimeters = 0.01 Meters = 0.3937 Inches
1 Meter = 100 Centimeters = 1000 Millimeters = 39.37 Inches
1 Kilometer = 1000 Meters = 0.621 Miles

WEIGHTS
1 Gram = 0.001 Kilograms = 1000 Milligrams = 0.035 Ounces
1 Kilogram = 1000 Grams = 2.2 lb
1 Metric Ton = 1000 Kilograms = 1 Megagram = 1.1 Short Tons

LIQUID MEASURE
1 Milliliter = 0.001 Liters = 0.0338 Fluid Ounces
1 Liter = 1000 Milliliters = 33.82 Fluid Ounces

SQUARE MEASURE
1 Sq Centimeter = 100 Sq Millimeters = 0.155 Sq Inches
1 Sq Meter = 10,000 Sq Centimeters = 10.76 Sq Feet
1 Sq Kilometer = 1,000,000 Sq Meters = 0.386 Sq Miles

CUBIC MEASURE
1 Cu Centimeter = 1000 Cu Millimeters = 0.06 Cu Inches
1 Cu Meter = 1,000,000 Cu Centimeters = 35.31 Cu Feet

TEMPERATURE
5/9 (°F - 32) = °C

212° Fahrenheit is equivalent to 100° Celsius
90° Fahrenheit is equivalent to 32.2° Celsius
32° Fahrenheit is equivalent to 0° Celsius
9/5 C° + 32 = F°

Approximate Conversion Factors

TO CHANGE	TO	MULTIPLY BY
Inches	Centimeters	2.540
Feet	Meters	0.305
Yards	Meters	0.914
Miles	Kilometers	1.609
Square Inches	Square Centimeters	6.451
Square Feet	Square Meters	0.093
Square Yards	Square Meters	0.836
Square Miles	Square Kilometers	2.590
Acres	Square Hectometers	0.405
Cubic Feet	Cubic Meters	0.028
Cubic Yards	Cubic Meters	0.765
Fluid Ounces	Millimeters	29.573
Pints	Liters	0.473
Quarts	Liters	0.946
Gallons	Liters	3.785
Ounces	Grams	28.349
Pounds	Kilograms	0.454
Short Tons	Metric Tons	0.907
Pound-Feet	Newton-Meters	1.356
Pounds per Square Inch	Kilopascals	6.895
Miles per Gallon	Kilometers per Liter	0.425
Miles per Hour	Kilometers per Hour	1.609
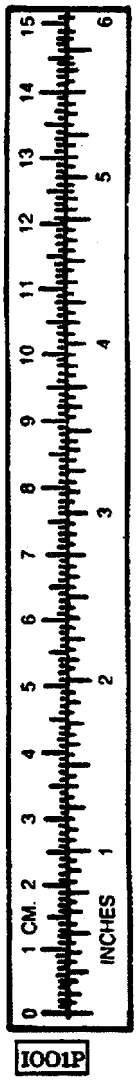
TO CHANGE	TO	MULTIPLY BY
Centimeters	Inches	0.394
Meters	Feet	3.280
Meters	Yards	1.094
Kilometers	Miles	0.621
Square Centimeters	Square Inches	0.155
Square Meters	Square Feet	10.764
Square Meters	Square Yards	1.196
Square Kilometers	Square Miles	0.386
Square Hectometers	Acres	2.471
Cubic Meters	Cubic Feet	35.315
Cubic Meters	Cubic Yards	1.306
Milliliters	Fluid Ounces	0.034
Liters	Pints	2.113
Liters	Quarts	1.057
Liters	Gallons	0.264
Grams	Ounces	0.035
Kilograms	Pounds	2.205
Metric Tons	Short Tons	1.102
Newton-Meters	Pound-Feet	0.736
Kilopascals	Pounds per Square Inch	0.145
Kilometers per Liter	Miles per Gallon	2.354
Kilometers per Hour	Miles per Hour	0.621