TO 1-1-3

TECHNICAL MANUAL

INSPECTION AND REPAIR OF AIRCRAFT INTEGRAL TANKS AND FUEL CELLS

BASIC AND ALL CHANGES HAVE BEEN MERGED TO MAKE THIS A COMPLETE PUBLICATION.

DISTRIBUTION STATEMENT A - Approved for public release; distribution is unlimited. PA Case Number 04-11-87. Other requests for this document shall be referred to 406 SCMS/GUEE, Robins AFB, GA 31098. Questions concerning technical content shall be referred to HQ AFMC/SEG.

Published Under Authority of the Secretary of the Air Force

21 JUNE 2013 **CHANGE 25 - 18 DECEMBER 2016**

LIST OF EFFECTIVE PAGES

INSERT LATEST CHANGED PAGES. DESTROY SUPERSEDED PAGES.

NOTE The portion of the text affected by the changes is indicated by a vertical line in the outer margins of the page. Changes to illustrations are indicated by shaded or screened areas, or by miniature pointing hands.

Dates of issue for original and changed pages are:

Original	0	21 June 2013	
Change	1	5 August 2013	
Change	2	26 August 2013	
Change	3	27 September 2013	
Change	4	16 November 2013	
Change	5	13 December 2013	
Change	6	6 January 2014	
Change	7	6 March 2014	
Change	8	19 April 2014	
Change	9	28 May 2014	
Change	10	9 June 2014	
Change	11	25 July 2014	
Change	12	8 October 2014	
Change	13	26 December 2014	
Change	14	23 January 2015	
Change	15	26 March 2015	
Change	16	3 May 2015	
Change	17	28 June 2015	
Change	18	30 July 2015	
Change	19	3 October 2015	
Change	20	27 April 2016	
Change	21	8 June 2016	
Change	22	28 July 2016	
Change	23	16 October 2016	
Change	24	31 October 2016	
Change	25	18 December 2016	

TOTAL NUMBER OF PAGES IN THIS PUBLICATION IS 252, CONSISTING OF THE FOLLOWING:

Page No.	*Change No.
Title	25
A - B	25
C Blank	22
i	23
ii	24
iii	21
iv	19
v	17
vi - x	23
xi	24
xii	14
xiii - xiv	23
1-1 - 1-3	0
1-4 - 1-5	13
1-6	19
1-7	13
1-8 Blank	0
2-1	0
2-2	3
2-3 - 2-4	13
2-5 - 2-6	24
2-6.1 Added	24
2-6.2 Blank	24
2-7	0
2-8	10
2-8.1 Added	10
2-8.2 Blank	10
2-9 - 2-10	25
2-10.1 Added	25
2-10.2 Blank	25
2-11	7
2-12	0
2-13	3
2-14 - 2-23	0
2-24 Blank	0
3-1	16
3-2	7
3-3	19
3-4 - 3-5	21
3-6 Blank	0
4-1	3
4-2	20
4-2.1 Added	19
4-2.2 Blank	19
4-3	15
4-4	13
4-4.1	14
4-4.2 Blank	8
4-5 - 4-8	0
5-1	17
5-2	11
5-3	19
5-4	6
5-4.1 Added	6
5-4.2 Blank	6
5-5 - 5-6	0
5-7	1
5-8 - 5-20	0
6-1	0
6-2 - 6-3	12
6-4 - 6-8	19
6-8.1 Added	19
6-8.2 Blank	19
6-9	12
6-10	0
6-11	19
6-12 - 6-16	0
6-17 - 6-18	2
6-18.1 Added	2
6-18.2 Blank	2
6-19 - 6-44	0
7-1 - 7-2	13
7-3 - 7-4	0
7-5	23
7-6	17
7-7 - 7-12	0
8-1 - 8-2	12
8-2.1	24
8-2.2 Blank	12
8-3	6
8-4	19
8-4.1	19
8-4.2 Blank	6
8-5 - 8-6	7
8-6.1	7
8-6.2 Blank	2
8-7 - 8-9	0
8-10	23
8-11 - 8-12	6
8-13 - 8-19	0
8-20 Blank	0
9-1	23
9-2	24
9-2.1	23
9-2.2 Blank	18
9-3	24
9-4	14
9-5	12
9-6	19
9-6.1	23
9-6.2 Blank	1
9-7 - 9-11	0

* Zero in this column indicates an original page.

LIST OF EFFECTIVE PAGES - continued

Page No.	*Change No.	Page No.	*Change No.	Page No.	*Change No.
9-12	19				
9-12.1 Added	19				
9-12.2 Blank	19				
9-13 - 9-45	0				
9-46	19				
9-47 Added	19				
9-48 Blank	19				
A-1	0				
A-2 Blank	0				
B-1 - B-5 Added	23				
B-6 Blank	23				
Glossary 1 - Glossary 4	0				
Glossary 5	16				
Glossary 6 - Glossary 7	0				
Glossary 8 Blank	0				

* Zero in this column indicates an original page.

TABLE OF CONTENTS

Chapter		Page
	LIST OF ILLUSTRATIONS	ix
	LIST OF TABLES	x
	FOREWORD	xi
	SAFETY SUMMARY	xiii
1	RESPONSIBILITIES, QUALIFICATIONS AND TRAINING	1-1
1.1	REPAIR RESPONSIBILITY	1-1
1.2	AUTHORITY	1-1
1.2.1	Definitions	1-1
1.3	CONFLICT	1-1
1.3.1	General	1-1
1.3.2	Conflict with AFOSH/OSHA Standard, AFI 91-203 or Federal Directive	1-1
1.3.3	Conflict with State or Local Directives	1-1
1.3.4	Conflict with General Series Technical Orders	1-1
1.3.5	Conflict with Weapons System Technical Orders	1-1
1.3.6	Application of Procedures	1-1
1.4	PERSONNEL	1-1
1.4.1	General	1-1
1.4.2	Common Duty Titles	1-2
1.5	TRAINING AND QUALIFICATIONS	1-2
1.5.1	General	1-2
1.5.2	Personnel/Office Responsibilities, Training and Qualifications	1-2
1.5.2.1	MXG/CC - Production Division Chief Responsibilities	1-2
1.5.2.2	Safety Office Responsibilities	1-2
1.5.2.3	Bioenvironmental Engineering Flight (BEF) Responsibilities	1-3
1.5.2.4	Fire Protection Services Responsibilities	1-3
1.5.2.5	Fuel Systems Section Chief/RPA Mech Section Chief	1-3
1.5.2.6	Entry Authority/Designated Alternate	1-3
1.5.2.7	Entrant	1-4
1.5.2.8	Attendant	1-4
1.5.2.9	Equipment Monitor/Runner	1-5
1.5.2.10	Quality Assurance Responsibilities	1-6
1.5.2.11	Environmental Management Office Responsibilities	1-6
1.5.2.12	Base Medical Officer Responsibilities	1-6
1.5.2.13	Aircraft Program Office Responsibilities	1-6
1.5.2.14	Base Weather Officer Responsibilities	1-6
1.5.2.15	MAJCOM Aircraft Fuel Systems Functional Manager/Superintendent Responsibilities	1-6
1.5.2.16	TO 1-1-3 OPR Responsibilities	1-7
2	SAFETY, HEALTH AND ENVIRONMENTAL REQUIREMENTS	2-1
2.1	PURPOSE	2-1
2.2	GENERAL	2-1
2.2.1	Minimum Requirements	2-1
2.2.2	Acceptable Risk	2-1
2.3	ASSUMPTIONS AND ALTERNATIVES	2-1
2.4	HAZARDS	2-1
2.4.1	Static Electricity	2-1
2.4.2	Confined Spaces and Enclosed Areas	2-1
2.4.3	Hot Work	2-1
2.4.4	Chemicals	2-1
2.4.5	Radar and Communications Systems	2-2
2.4.6	Fuels	2-2
2.4.7	Ancillary Systems	2-3
2.4.8	Environmental Hazards	2-3
2.4.9	Weather Conditions	2-3
2.4.9.1	Climatic Conditions	2-3
2.4.9.2	Severe Weather Notification	2-3
2.5	MEDICAL REQUIREMENTS	2-3
2.5.1	Physical Examinations and Requirements	2-3
2.5.2	Medical Treatment	2-3
2.6	PROTECTIVE CLOTHING AND EQUIPMENT	2-4
2.6.1	Personal Protective Clothing	2-4
2.6.1.1	Coveralls	2-4
2.6.1.2	Undergarments	2-4
2.6.1.3	Chemical-Resistant Clothing	2-4
2.6.1.4	Footwear	2-4
2.6.1.5	Gloves	2-4
2.6.1.6	Head Coverings	2-4
2.6.2	Personal Protective Equipment	2-4
2.6.2.1	Respirators	2-4
2.6.2.2	Eye Protection	2-5
2.6.2.3	Hearing Protection	2-5
2.6.2.4	Padding	2-5

TABLE OF CONTENTS - CONTINUED

Chapter		Page
2.6.2.5	Aprons	2-5
2.6.3	Authorized Monitoring Equipment	2-5
2.6.4	Emergency Rescue and Retrieval Equipment	2-5
2.7	SAFETY PRACTICES	2-5
2.7.1	Controlling Access to a Fuel Systems Repair Area	2-5
2.7.2	Personal Hygiene	2-5
2.7.3	Housekeeping	2-5
2.7.4	Support and Test Equipment	2-6
2.7.4.3	Powered Support Equipment	2-6
2.7.4.4	Test Equipment	2-6
2.7.4.5	Tools and Tool Boxes	2-6.1
2.7.4.6	Fuel Collection Containers	2-6.1
2.7.5	Electrical Equipment	2-7
2.7.5.1	Aircraft Radar	2-7
2.7.5.4	Lights	2-7
2.7.5.5	Electronic/Video Personnel Monitors	2-7
2.7.5.6	Other Electrical Equipment	2-7
2.7.6	Communication and Visual Aids	2-7
2.7.6.1	Documentation	2-7
2.7.6.3	Communication	2-8
2.7.6.4	Streamers	2-8
2.7.6.5	Signs	2-8
2.7.6.6	Rope, Chain, Cable or Marking Tape	2-8
2.7.7	Munitions, Explosive and Pyrotechnic Device	2-8
2.7.8	Aircraft Operations	2-8
2.7.9	Externally-Mounted Fuel System Components	2-8
2.7.10	Grounding/Bonding	2-9
2.7.11	Temporary Panels	2-9
2.8	CONFINED SPACE FUEL TANK/ CELL ENTRY	2-9
2.8.1	General	2-9
2.8.2	Emergency Response and Rescue Plan	2-10
2.8.3	Master Entry Plan (MEP)	2-11
2.8.4	Entry Permit	2-13
2.9	AIRCRAFT AND FACILITIES PROTECTION	2-13
2.9.1	Servicing and Operations	2-13
2.9.1.1	JP-5, JP-8, Jet A, and Jet A-1 Serviced Aircraft	2-13
2.9.1.2	JP-4 Serviced Aircraft	2-13
2.9.2	Fire Protection	2-13
2.9.3	Aircraft Electrical Systems	2-13
2.9.3.1	Batteries	2-13
2.9.3.2	Fuel Quantity Wiring Harness Repairs	2-13
2.9.3.3	Fuel Probe Testing	2-14
3	AIRCRAFT FUEL SYSTEMS REPAIR FACILITIES AND AREAS	3-1
3.1	GENERAL	3-1
3.1.1	Permitted Operations	3-1
3.1.2	Repair Facility/Area Approval	3-1
3.1.3	Repair Facility/Area Definitions	3-1
3.2	FUEL SYSTEMS REPAIR FACILITY AND AREA REQUIREMENTS	3-1
3.2.1	General	3-1
3.2.2	New Facility	3-2
3.2.3	Existing Facilities	3-3
3.2.4	Open (Outside) Fuel Systems Repair Areas	3-4
3.2.5	Temporary Repair Facilities	3-4
4	FUEL LEAK EVALUATION, CLASSIFICATION AND TEMPORARY REPAIRS	4-1
4.1	PURPOSE	4-1
4.2	GENERAL	4-1
4.2.1	Troubleshooting	4-1
4.2.2	Chasing a Leak	4-1
4.2.3	Cosmetic Repairs	4-1
4.3	POSSIBLE CAUSES OF FUEL LEAKS	4-1
4.4	FUEL CELL LEAK EVALUATION	4-1
4.5	LOCATING AND EVALUATING FUEL LEAK	4-1
4.5.1	General	4-1
4.5.2	Approved Methods to Locate a Leak Exit Point	4-1
4.5.2.1	Leak Detection Powder Method	4-1
4.5.2.2	Torn Paper Method	4-2
4.5.2.3	Leak Detection Helium Method	4-2
4.5.2.4	Hydrogen-Nitrogen Leak Detection Method	4-2
4.6	INTEGRAL FUEL TANK LEAK CLASSIFICATION	4-3
4.6.1	General	4-3
4.6.2	Leak Classifications	4-3
4.6.3	Leak Locations	4-3
4.6.4	Conditions and Actions	4-4
4.6.5	Determining which Tank is Leaking	4-4
4.7	DOCUMENTATION	4-4.1
4.8	INTEGRAL FUEL TANK TEMPORARY REPAIRS	4-4.1
4.8.1	General	4-4.1
4.8.2	Loose Fasteners	4-4.1

TABLE OF CONTENTS - CONTINUED

Chapter		Page
4.8.3	Temporary Repairs Accomplished at Depot	4-4.1
4.8.4	Approved Temporary Repair Methods	4-4.1
4.8.5	Hardman Extra-Fast Setting Epoxy with Aluminum Foil Patch	4-5
4.8.5.1	Required Materials	4-5
4.8.5.3	Application	4-5
4.8.5.4	Removal	4-5
4.8.6	Aluminum Foil Patch Bonded with Sealant	4-5
4.8.6.1	Required Materials	4-5
4.8.6.3	Application	4-5
4.8.6.4	Removal	4-5
4.8.7	Epoxy Tabs or Putty	4-5
4.8.7.1	Required Materials	4-6
4.8.7.3	Application	4-6
4.8.7.4	Removal	4-6
4.8.8	Click Patch	4-6
4.8.8.1	Required Materials	4-6
4.8.8.3	Application	4-6
4.8.8.4	Removal	4-6
4.8.9	Sealant without Aluminum Foil Patch	4-6
4.8.9.1	Required Materials	4-6
4.8.9.3	Application	4-6
4.8.9.4	Removal	4-7
4.8.10	Hardman Extra-Fast Setting Epoxy Without Aluminum Foil Patch	4-7
4.8.10.1	Required Materials	4-7
4.8.10.3	Application	4-7
4.8.10.4	Removal	4-7
4.8.11	Comp Air D236 Injector Kit	4-7
4.8.11.1	Required Materials	4-7
4.8.11.3	Application	4-7
4.8.12	Oyltite Stik	4-8
4.8.12.1	Required Materials	4-8
4.8.12.3	Application	4-8
4.8.12.4	Removal	4-8
5	PREPARATION FOR MAINTENANCE	5-1
5.1	PURPOSE	5-1
5.2	GENERAL	5-1
5.3	CHECKING VOC PPM (LEL) LEVEL	5-1
5.3.1	Using Atmospheric Testing Equipment	5-1
5.3.2	Deleted	5-1
5.4	CHECKLISTS	5-1
5.4.1	General Checklist for Fuel Systems Repair Facilities/Areas	5-1
5.4.2	General Checklist for Fuel Tank/Cell Entries	5-2
5.5	PURGING AND VENTILATING	5-2
5.5.1	Support Equipment	5-2
5.5.1.1	Air Conditioners	5-3
5.5.1.2	MA-1 Blower	5-3
5.5.1.3	Heaters	5-3
5.5.1.4	Air Ducts	5-3
5.5.1.5	Portable Electric- or Pneumatic-Powered Ambient Air Breathing Pumps	5-3
5.5.1.6	Portable Electric- or Pneumatic-Powered Fans and Blowers	5-3
5.5.1.7	Air Mover	5-3
5.5.1.8	Shot Bag	5-3
5.5.1.9	Fuel Cell/Tank Servicing Cart	5-3
5.5.1.10	Fuel Foam Storage Cart	5-3
5.5.1.11	Ventilation Duct Air Movers	5-3
5.5.2	General	5-3
5.5.3	Combination Purge	5-4
5.5.3.1	Required Equipment	5-4
5.5.3.2	Procedures	5-4
5.6	BAFFLE AND INERTING MATERIAL (Commonly referred to as fuel foam)	5-5
5.6.1	General	5-5
5.6.1.1	MIL-DTL-83054C Baffle and Inerting Material	5-5
5.6.1.2	MIL-PRF-87260A Baffle and Inerting Material	5-5
5.6.2	Fuel Foam Removal	5-5
5.6.3	Fuel Foam Inspection Criteria	5-6
5.6.4	Fuel Foam Storage	5-6
5.6.4.1	Indoor Storage	5-6
5.6.4.2	Outdoor Storage	5-6
5.6.5	Fuel Foam Replacement	5-6
5.6.6	Fuel Foam Reinstallation	5-6
5.7	DEPUDDLING	5-6
5.7.1	Support Equipment	5-6
5.7.1.1	Vacuum Cleaner	5-7
5.7.1.2	Rubber Bucket	5-7
5.7.2	General	5-7
5.7.2.1	Required Equipment and Materials	5-7
5.7.2.2	Procedures	5-7
5.8	COMPONENT PURGING	5-7
5.8.1	Support Equipment	5-7
5.8.1.1	Air Chuck	5-7
5.8.1.2	Rubber Bucket	5-7
5.8.2	General	5-7
5.8.2.1	Required Equipment, Materials and PPE	5-7
5.8.2.2	Procedures	5-7
6	INTEGRAL TANKS	6-1

TABLE OF CONTENTS - CONTINUED

Chapter		Page
6.1	PURPOSE	6-1
6.2	GENERAL	6-1
6.3	FUEL LEAKS	6-1
6.3.1	General	6-1
6.3.2	Leak Path Analysis	6-1
6.3.3	General Troubleshooting and Repair Sequence of Events	6-1
6.4	LEAK EXIT POINT DETECTION	6-2
6.4.1	Support Equipment	6-2
6.4.1.1	Caps, Plugs and Cover Plates	6-2
6.4.1.2	Tank Pressurization System (TPS)	6-2
6.4.1.3	Ultraviolet Light	6-2
6.4.1.4	Leakage Tracing Device	6-2
6.4.1.5	Pressure Box	6-2
6.4.1.6	Pressure and Vacuum Tank Leakage Test Control Panel	6-2
6.4.1.7	Manometers	6-2
6.4.2	Pressure Test	6-2
6.4.2.1	General	6-2
6.4.2.2	Required Equipment and Materials	6-2
6.4.2.3	Procedures	6-2
6.5	FUEL TANK INSPECTION	6-3
6.5.1	Free Water and Microbial Growth	6-3
6.5.2	Condition of Structure	6-4
6.5.3	Condition of Sealant	6-4
6.6	LOCATING A LEAK SOURCE	6-4
6.6.1	Pressure Methods	6-4
6.6.2	Helium Detection Method	6-4
6.6.3	Hydrogen-Nitrogen Detection Method	6-4
6.6.4	Vacuum Methods	6-5
6.6.5	Aircraft Preparation	6-5
6.6.6	Blow Back	6-5
6.6.6.1	General	6-5
6.6.6.2	Required Equipment and Materials	6-5
6.6.6.3	Procedures	6-5
6.6.7	Helium Detection Method	6-5
6.6.7.1	Required Equipment and Materials	6-5
6.6.7.2	Procedures	6-5
6.6.8	Pressure Box	6-5
6.6.8.1	General	6-5
6.6.8.2	Required Equipment and Materials	6-6
6.6.8.3	Procedures	6-6
6.6.9	Pressure Box and Dye	6-6
6.6.9.1	General	6-6
6.6.9.2	Required Equipment and Materials	6-6
6.6.9.3	Procedures	6-6
6.6.10	Double Cup and Dye	6-7
6.6.10.1	General	6-7
6.6.10.2	Required Equipment and Materials	6-7
6.6.10.3	Procedures	6-7
6.6.11	Hollow Bolt and Dye	6-7
6.6.11.1	General	6-7
6.6.11.2	Required Equipment and Materials	6-7
6.6.11.3	Procedures	6-7
6.6.12	Vacuum Cup	6-8
6.6.12.1	General	6-8
6.6.12.2	Required Equipment and Materials	6-8
6.6.12.3	Procedures	6-8
6.6.13	Vacuum Dye Method	6-8
6.6.13.1	General	6-8
6.6.13.2	Required Equipment and Materials	6-8
6.6.13.3	Procedures	6-8
6.7	FUEL TANK SEALING METHODS	6-9
6.7.1	Access Door Types and Sealing Methods	6-9
6.7.2	Fastener Types and Sealing Methods	6-10
6.7.2.1	Fastener Types	6-10
6.7.2.2	Fastener Sealing Methods	6-10
6.7.3	Fuel Tank Boundary Sealing Methods	6-10
6.7.3.1	Non-Curing Sealant	6-10
6.7.3.2	Curing Sealant	6-10
6.7.3.3	Structural Adhesive Sealant	6-10
6.7.3.4	Vacuum Sealant Method	6-10
6.8	SEALANT HANDLING	6-11
6.8.1	Sealant Storage	6-11
6.8.2	Mixing of Curing-Type Sealants	6-12
6.8.3	Application (Working) Life of Sealants	6-12
6.8.4	Tack-Free Time	6-12
6.8.5	Sealant Cure	6-12
6.8.5.1	Sealant Cure Acceleration	6-12
6.8.6	Sealant Inspection	6-14
6.8.6.3	Sealant Testing	6-14
6.8.7	Shelf-life Extension	6-15
6.8.8	Freezing Sealant	6-15
6.8.9	Thawing Sealant	6-16
6.9	FUEL LEAK REPAIR	6-17
6.9.1	Support Equipment	6-17

TABLE OF CONTENTS - CONTINUED

Chapter		Page
6.9.1.1	Cartridges	6-17
6.9.1.2	Gun and Mixing Kit	6-17
6.9.1.3	Filleting Nozzles	6-17
6.9.1.4	Injection Nozzles	6-17
6.9.1.5	Cartridge Sealant Plunger	6-17
6.9.1.6	Injection Nozzle Cleaners	6-17
6.9.1.7	Curing-Type Sealant Gun	6-17
6.9.1.8	Non-Curing Type Sealant Guns	6-17
6.9.1.9	Sealant Scraper	6-17
6.9.2	Non-Curing Type Sealant Repair	6-18
6.9.2.1	Required Equipment and Materials	6-18
6.9.2.2	Procedures	6-18
6.9.3	Curing-Type Sealant Repair	6-18
6.9.3.1	Surface Preparation	6-18
6.9.3.2	Sealant Application	6-19
6.9.4	Fastener Repair	6-21
6.9.4.1	Self-Sealing Fasteners	6-21
6.9.4.2	Fasteners Located in Sealant Channels	6-21
6.9.4.3	Fasteners Sealed with Dome Nuts	6-21
6.9.4.4	Fasteners Sealed with Sealing Washers or O-Rings	6-21
6.9.4.5	Fasteners Sealed by Brush-Coat and Fillet	6-21
6.9.4.6	Wet Installed Fasteners	6-21
6.9.4.7	Access Door/Panel Fastener Leak Repair	6-22
6.9.5	Access Door/Panel Seal Replacement	6-22
6.9.5.1	Required Equipment and Materials	6-22
6.9.5.2	Procedures	6-22
6.9.6	Using Desealant, Specification MIL-D-9063	6-22
7	ALC AND AMARC REQUIREMENTS	7-1
7.1	PURPOSE	7-1
7.1.1	General	7-1
7.1.2	Applicability of Procedures	7-1
7.1.2.2	Contract Maintenance	7-1
7.2	ALC/AMARC PERSONNEL RESPONSIBILITIES, QUALIFICATIONS AND TRAINING REQUIREMENTS	7-1
7.2.1	First-Level Supervisor	7-1
7.2.1.1	First-Level Supervisor Responsibilities	7-1
7.2.2	Entry Authority/Designated Alternate	7-2
7.2.2.1	Entry Authority/Designated Alternate Responsibilities	7-2
7.2.3	Entrant	7-2
7.2.3.1	Entrant Responsibilities	7-2
7.2.3.2	Entrant Training and Qualification Requirements	7-2
7.2.4	Attendant	7-3
7.2.4.1	Attendant Responsibilities	7-3
7.2.4.2	Attendant Training and Qualification Requirements	7-3
7.2.5	Equipment Monitor/Runner	7-3
7.2.5.2	Equipment Monitor/Runner Responsibilities	7-3
7.2.5.3	Equipment Monitor/Runner Training and Qualification Requirements (minimum)	7-4
7.2.6	Documentation of Training	7-4
7.3	SAFETY AND HEALTH REQUIREMENTS	7-4
7.3.8	Weather Conditions	7-5
7.3.8.1	Climatic Conditions	7-5
7.3.8.2	Severe Weather Notification	7-5
7.4	ATMOSPHERIC MONITORING	7-5
7.4.1	Using the PID Meter	7-5
7.4.2	Deleted	7-6
7.5	CONFINED SPACE FUEL TANK/CELL ENTRY	7-6
7.5.1	General	7-6
7.5.2	Emergency Response and Rescue Plan	7-7
7.5.3	Master Entry Plan (MEP)	7-8
7.5.4	Entry Permit	7-9
7.6	FLUID PURGING	7-9
7.6.1	Fluid Purging Procedures	7-9
7.6.1.1	Required Equipment and Materials	7-9
7.6.1.2	Procedures	7-9
7.7	AIRCRAFT PREPARATION FOR FUEL SYSTEMS MAINTENANCE	7-10
7.8	AIR PURGING	7-10
7.8.1	Combination Purge	7-10
7.8.1.1	Required Equipment	7-10
7.8.1.2	Procedures	7-10
7.9	AIRCRAFT FUEL SYSTEMS INSPECTION REQUIREMENTS	7-12
8	EQUIPMENT AND MATERIALS	8-1
8.1	PURPOSE	8-1
8.2	GENERAL	8-1
8.3	EQUIPMENT AND MATERIAL SUBSTITUTION	8-1
8.4	SAFETY EQUIPMENT	8-1
8.4.1	Air Purifier Cart	8-1

TABLE OF CONTENTS - CONTINUED

Chapter		Page
8.4.2	Water Manometer Functional Check	8-1
8.5	MATERIALS	8-2
9	FUEL CELLS	9-1
9.1	PURPOSE	9-1
9.2	GENERAL	9-1
9.2.1	Item Unique Identification (IUID) Label	9-1
9.3	FUEL CELL CONSTRUCTION	9-1
9.3.1	Self-Sealing Fuel Cells	9-1
9.3.2	Bladder Fuel Cells	9-1
9.3.3	Combination Cells	9-1
9.3.4	Fittings	9-1
9.3.4.1	Rubber Face	9-1
9.3.4.2	Compression	9-2
9.3.4.3	Metal-to-Metal	9-2
9.4	FUEL CELL HANDLING, PRESERVATION, PACKAGING AND STORAGE	9-2
9.4.1	Fuel Cell Handling	9-2
9.4.2	Fuel Cell Preservation, Packaging and Storage	9-2
9.5	FUEL CELL DIAGNOSTIC INFORMATION, CLEANING, AND INSPECTION	9-2
9.5.1	Diagnostic Information	9-2
9.5.2	Cleaning Prior to Inspection	9-3
9.5.3	Fuel Cell Inspections	9-3
9.6	FUEL CELL TESTING	9-3
9.6.1	Location	9-3
9.6.2	Fuel Cell Fittings	9-3
9.6.2.2	Required Materials	9-3
9.6.2.3	TPS2 Method	9-3
9.6.2.4	Required Materials	9-3
9.6.2.5	Procedures	9-3
9.6.3	Self-Sealing Cells	9-4
9.6.4	Bladder Fuel Cells	9-4
9.6.5	Chemical Test	9-4
9.6.5.1	Required Materials	9-4
9.6.5.2	Procedures	9-4
9.6.6	Soap Suds Test	9-5
9.6.6.1	Required Materials	9-5
9.6.6.2	Procedures	9-5
9.6.6.3	Helium Leak Detection Test	9-6
9.6.6.4	Required Materials	9-6
9.6.6.5	Procedures	9-6
9.6.6.6	Hydrogen-Nitrogen Leak Detection Method	9-6
9.6.7	Blow Back	9-6
9.6.7.1	General	9-6
9.6.7.2	Required Equipment and Materials	9-6
9.6.7.3	Procedures	9-6
9.7	FUEL CELL REPAIRS	9-6
9.7.1	Repair of Installed Cells	9-6
9.7.2	Repair Capability Restrictions	9-6
9.8	APPLICATION OF LACQUER FINISH COAT	9-6.1
9.8.2	Required Materials	9-6.1
9.8.3	Procedures	9-6.1
9.9	FUEL CELLS REPAIRED BY AN APPROVED CONTRACTOR	9-7
9.10	FUEL CELL CAVITY INSPECTION	9-7
9.10.2	Lacing Cords and Knots	9-7
9.11	FUEL CELL DOCUMENTATION	9-7
9.12	INSPECTION AND REPAIR OF BLADDER CELLS	9-7
9.12.1	INSPECTION	9-7
9.12.1.1	Interior Inspection Criteria for New/Removed Cells	9-7
9.12.1.2	Exterior Inspection Criteria for New/Removed Cells	9-8
9.12.1.3	Interior Inspection Criteria for Installed Bladder Cells	9-8
9.12.1.4	Exterior Inspection Criteria for Installed Bladder Cells	9-9
9.12.2	REPAIR	9-10
9.12.2.1	Support Equipment	9-10
9.12.2.2	Types of Damages and Repairs	9-10
9.12.3	Required Materials	9-10
9.12.4	Procedures	9-10
9.12.5	Vulcanizing (Hot Patch) Repair	9-11
9.12.6	Vacuum Seal Patch Installation Using Cold Cure Method (Nitrile and Vithane Bladder Cells)	9-12
9.13	INSPECTION AND REPAIR OF SELF-SEALING CELLS	9-12
9.13.1	Inspection	9-12
9.13.1.1	Interior Inspection Criteria for New/Removed Cells	9-12
9.13.1.2	Exterior Inspection Criteria for New/Removed Cells	9-12.1
9.13.1.3	Interior Inspection Criteria for Installed Cells	9-13
9.13.1.4	Exterior Inspection Criteria for Installed Cells	9-13
9.13.2	Repair	9-13
9.13.2.1	General	9-13
9.13.2.2	Inside Preparation	9-14
9.13.3	Repair of Separation that Extends into Fitting Area	9-14
9.13.4	Repair of Hole-Type Damage less than Three Inches in Diameter	9-15

TABLE OF CONTENTS - CONTINUED

Chapter		Page
9.13.5	Laying and Rolling Sealant	9-15
9.13.6	Reinforcing Wrap for Tubular Fitting	9-15
9.14	INSPECTION AND REPAIR OF VITHANE FUEL CELL	9-16
9.14.1	Inspection Criteria for New/Removed Vithane Bladder Cells	9-16
9.14.2	Vithane Cell Exterior Inspection (Installed Cells)	9-16
9.14.3	Application of Cover Patches over Fitting Flanges	9-16
9.15	REPAIR OF GOODYEAR (VITHANE) CELLS	9-16
9.15.1	General	9-16
9.15.3	Types of Damages and Repairs	9-16
9.15.4	Repair Limitations	9-17
9.15.5	Vithane Bladder Cells Repair Procedures	9-17
9.15.5.1	Air-Cure Method	9-18
9.15.5.2	Inspection	9-18
9.15.6	Vithane Self-Sealing Cell Repair Procedures	9-18
9.15.6.1	General	9-18
9.15.6.2	Type of Damages and Repairs	9-18
9.15.6.3	Repair Limitations	9-18
9.15.6.4	Repair of Self-Sealing Vithane Cells	9-18
9.15.6.5	Preparation	9-18
9.15.6.6	Fitting Repair	9-18
9.15.6.7	Testing of Vithane Self-Sealing Fuel Cells	9-18
9.15.6.8	Cell Studs	9-18
9.16	GENERAL DAMAGE REPAIRS FOR BLADDER AND SELF-SEALING CELLS (EXCEPT VITHANE)	9-18
9.16.2	Repair of Weather-Ozone Checked Inner-Liners	9-19
9.16.3	Repair of Blisters	9-19
9.16.4	Repair of Loose Seams and Patches (Outer Edge)	9-19
9.16.5	Repair of Loose Lap Seams	9-20
9.16.6	Repair of Hangar Supports and Straps	9-20
9.16.7	Repair of Inside Corners	9-20
9.16.8	Repair of Outside Corners	9-21
9.16.9	Repair of Exposed Fabric	9-21
9.17	INSPECTION AND REPAIR OF FUEL CELL FITTINGS	9-21
9.17.1	Inspection	9-21
9.17.1.1	Inspection Criteria for Fully Rubber-Molded Fittings on New and Removed Self-Sealing Cells	9-21
9.17.1.2	Inspection Criteria for Fully Rubber-Molded Fittings on Installed Self-Sealing Cells	9-21
9.17.1.3	Inspection Criteria for Sealing Face without O-Ring Groove	9-21
9.17.1.4	Inspection Criteria for Sealing Face with O-Ring Groove	9-21
9.17.1.5	Inspection Criteria for Rubber Face Fittings on New and Removed Fuel Cells	9-22
9.17.1.6	Inspection Criteria for Rubber Face Fittings on Installed Fuel Cells	9-22
9.17.2	Repair	9-22
9.17.2.1	Repair of Fitting O-Ring Groove Area	9-22
9.17.2.2	Broken O-ring Groove Flanges	9-22
9.17.2.5	Extent of Damage	9-22
9.17.3	Repair of Broken O-Ring Groove Flange	9-22
9.17.4	Repair of Break through the Fitting Body	9-23
9.17.5	Fitting Replacement	9-23
9.17.5.1	Removal of Damaged Fittings	9-23
9.17.6	Installation of New Fittings	9-24
9.17.7	Application of Cover Patches Over Fitting Flanges	9-24
9.17.8	Repair of Burrs, Scratches, Nicks or other Damage on the Sealing Surface (Including O-Ring Groove)	9-24
9.17.9	Repair of Fully-Molded Fittings (Rubber Fittings With Metal Inserts)	9-24
9.17.9.2	Required Materials	9-24
9.17.9.3	Procedures	9-24
9.17.10	Repair of O-ring Fitting	9-25
APPENDIX A	SHELF LIFE UPDATE METHOD BASE LEVEL (FIELD)	A-1
A.1	SHELF LIFE UPDATING	A-1
A.2	PERFORM VISUAL INSPECTION	A-1
A.2.1	All Packaging Except Two-Component Kits	A-1
A.2.2	Two-Component Kits	A-1
A.3	PERFORMANCE TESTING	A-1
A.4	DELETED	A-1

TABLE OF CONTENTS - CONTINUED

Chapter		Page
APPENDIX B	ITEM UNIQUE IDENTIFICATION (IUID) SUPPORTING INFORMATION.	B-1
B.1	INTRODUCTION	B-1
B.1.1	Scope	B-1
B.2	APPLICATION OF IUID LABEL	B-1
GLOSSARY		Glossary 1

LIST OF ILLUSTRATIONS

Number	Title	Page
2-1	Sample Master Entry Plan (MEP)	2-15
2-2	Sample Emergency Response and Rescue Plan	2-22
5-1	Typical Combination Purge in Open Repair Area	5-8
5-2	Exhaust Purge Adapter	5-9
6-1	Typical Integral Fuel Tanks	6-23
6-2	Curing Sealant Design	6-24
6-3	Non-Curing Sealant Design	6-24
6-4	Typical Locations of Grooves/Channels	6-25
6-5	Structural Adhesive Sealing	6-26
6-6	Plug Door	6-26
6-7	Direct Seal Door	6-27
6-8	Flat Gasket Seal	6-27
6-9	O-Ring Seal	6-27
6-10	Formed-In-Place Seal	6-28
6-11	Typical Fastener Seal	6-28
6-12	Typical Fasteners, Overcoat and Fillet	6-29
6-13	Machine Fitted Plug-Type Access Door for Attaching Screws	6-30
6-14	Leak Path Analysis	6-30
6-15	Fasteners Leaks	6-31
6-16	Examples of Long Leak Paths	6-32
6-17	Fastener Movement on Oversize Hole	6-33
6-18	Multiple Leak Paths from a Single Leak Source	6-33
6-19	Sealant Bridging	6-34
6-20	Fillet Seal Deflection	6-35
6-21	Pressure Test Method	6-36
6-22	Blow Back Method	6-37
6-23	Dye Injection Method	6-38
6-24	Use of Pressure Box for Dye Injection	6-39
6-25	Hand Mixing of Sealant Kit	6-40
6-26	Machine Mixing of Cartridges	6-41
6-27	Void in Non-Curing Sealant Groove	6-42
6-28	Two Bead Fillet	6-42
6-29	Typical Fillet Seals	6-42
6-30	Typical Fillet Dimensions	6-43
6-31	Applications of Faying Surface Sealant	6-44
6-32	Faying Surface Seal Assembly	6-44
8-1	Marking of Fuel System Repair Area	8-11
8-2	Water Manometer	8-12
8-3	Typical U-Tube Type Manometer	8-13
8-4	Typical Well-Type Manometer	8-14
8-5	Air Mover	8-15
8-6	Typical Hand Scraper	8-16
8-7	Horizontal Stitcher	8-16
8-8	Stitcher Roller	8-17
8-9	Vertical Offset Stitcher	8-17
8-10	Sealant Cartridges	8-17
8-11	Filleting Nozzle	8-18
8-12	Filleting Gun	8-19
9-1	Projectile Sealing Action	9-26
9-2	Self-Sealing	9-26
9-3	Typical Self-Sealing Construction	9-27
9-4	Non-Self-Sealing Construction	9-28
9-5	Separation of Cell Wall from Fitting Fabric Flange	9-28
9-6	Channel Blister and Loose Areas	9-29
9-7	Loose Baffles	9-29
9-8	Loose Patches	9-30
9-9	Channel at Lap Steps	9-30
9-10	Weather and Crazing	9-31
9-11	Lap Channels	9-31
9-12	O-Ring Fitting Inspection	9-32
9-13	Looseness Under Hanger Fitting	9-33
9-14	Sump Fitting	9-33
9-15	Three-Plane Fitting	9-34
9-16	Marking Area to be Repaired	9-34
9-17	Pedestal for Supporting Cells	9-35
9-18	Knuckle Test	9-35
9-19	Centering Patch	9-36
9-20	Rolling Down Patch	9-36
9-21	Sectional Views of Corner Patch	9-36
9-22	Inside Corner Patch	9-37
9-23	Ruptured Inner Liner	9-38
9-24	Marking Cell	9-38
9-25	Build-up Cell	9-38
9-26	Finished Build-up Cell	9-39
9-27	Two-Phase Fitting	9-39
9-28	Wrap Application	9-40
9-29	Fitting Flange Break	9-40
9-30	Retainer Ring Installation	9-41
9-31	Locating Fitting	9-41
9-32	Fuel Cell Fitting Leak Test Cover Plate	9-42
9-33	Torque Pattern for Bolts	9-43
9-34	Replacing Lacing Cord	9-44
9-35	Lacing Cord Knots	9-45
9-36	Materials and Repair Set-Up	9-46
9-37	Materials and Repair Set-Up	9-47
B-1	IUID Identifier, PNs 695733-1, 695733-2 (Not to Scale)	B-3
B-2	IUID Identifier, PNs 695734-1, 695734-2, 695734-3, 695734-4 (Not to Scale)	B-4
B-3	IUID Identifier, PNs 695735-1, 695735-2 (Not to Scale)	B-5

LIST OF TABLES

Number	Title	Page
1-1	Position Equivalents	1-2
2-1	Common Jet Fuel Properties and Additives	2-2
4-1	Leak Classification Table - Integral Fuel Tanks	4-2.1
5-1	Allowable VOC PPM and LEL Levels	5-1
6-1	Estimated Cure Times	6-12
6-2	Sealant Storage (MIL-S-8802 and MIL-S-83430)	6-16
6-3	Estimated Tack-Free/Cure Time (Hours)	6-16
7-1	Allowable ALC/AMARC VOC PPM and LEL Levels	7-5
8-1	Common Consumables	8-2
9-1	Cell Test Pressure	9-4
B-1	IUID Parts List	B-1

FOREWORD

1 PURPOSE OF MANUAL.

This technical order establishes USAF policy for the maintenance of aircraft fuel tanks/cells. Included in this technical order are general requirements for preparation of an aircraft for fuel systems maintenance and inspection. The requirements of this technical order are applicable to all aircraft in the AF inventory. Procedures requiring special equipment, facilities or extraordinary safety precautions are not included in this manual.

2 SCOPE OF MANUAL.

The technical order is divided into the following Chapters: Responsibilities, Qualifications and Training; Safety, Health and Environmental Requirements; Aircraft Fuel Systems Repair Facilities and Areas; Fuel Leak Evaluation, Classification and Temporary Repairs; Preparation for Maintenance; Integral Tanks; ALC and AMARC Requirements; Equipment and Materials; and Fuel Cells. This technical order is organized as follows:

Foreword	Provides authority for publication of the technical order and summarizes each chapter.
Chapter 1	Summarizes the duties, qualifications and training for personnel and organizations involved in fuel systems repair, and provides for resolution when the requirements of this technical order conflict with other directives.
Chapter 2	Provides safety, health and environmental requirements necessary to perform fuel systems repair.
Chapter 3	Provides a brief description of the areas and facilities required for fuel systems repair. This includes primary, alternate, temporary repair facilities and open repair areas.
Chapter 4	Provides information for evaluating and classifying fuel leaks. Also covers authorized types of temporary repairs and the application/removal procedures.
Chapter 5	Provides instructions for preparing an aircraft for fuel systems repair. Procedures for purging, ventilating, draining and depuddling are covered. Removal, inspection and replacement of baffle and inerting material are also included.
Chapter 6	Describes the techniques for inspecting and repairing integral tanks. Procedures common to all levels of fuel systems repair, except as addressed in Paragraph 1, are detailed.
Chapter 7	Provides information for ALC and AMARC maintenance.
Chapter 8	Lists common equipment and materials that may be used to perform inspection and repair procedures described in this technical order.
Chapter 9	Describes the techniques for inspecting and repairing fuel cells.
Glossary	Contains definitions of both common words and word/phrases peculiar to fuel systems repair.

3 ABBREVIATIONS.

Abbreviations used in this technical order conform to AMSE Y14.38M. The abbreviations most frequently used are:

ALC	Air Logistics Center
AMARC	Aerospace Maintenance and Regeneration Center
CCU	Climatic Control Units
CSPT	Confined Space Program Team
ETL	Engineering Technical Letter
FOT	Frequency of Training
HWK	Helitest Wing Kit
IPI	In-process Inspection
LEL	Lower Explosive Limit
MDS	Manual Desealing System
MEP	Master Entry Plan
MSDS	Material Safety Data Sheet
NFPA	National Fire Protection Association
OSHA	Occupational Safety and Health Administration
OHWG	Occupational Health Working Group
ODS	Ozone Depleting Substance
OEL	Occupational Exposure Limit
PDM	Programmed Depot Maintenance
PPE	Personal Protective Equipment
PPM	Parts Per Million
RAC	Risk Assessment Code
RCD	Rapid Curing Device
RDS	Rapid Desealing System
TPS	Tank Pressurization System

TPS/TPS2	Tank Pressurization System/Tank Pressurization System 2	VOC	Volatile Organic Compound

SAFETY SUMMARY

1 GENERAL SAFETY INSTRUCTIONS.

This manual describes physical and/or chemical processes which may cause injury or death to personnel, or damage to equipment, if not properly followed. This safety summary includes general safety precautions and instructions that must be understood and applied during operation and maintenance to ensure personnel safety and protection of equipment. Prior to performing any specific task, the WARNINGs, CAUTIONs, and NOTEs included in that task shall be reviewed and understood.

2 WARNINGS, CAUTIONS, AND NOTES.

WARNINGs and CAUTIONs are used in this manual to highlight operating or maintenance procedures, practices, conditions, or statements which are considered essential to protection of personnel (WARNING) or equipment (CAUTION). WARNINGs and CAUTIONs immediately precede the step or procedure to which they apply. WARNINGs and CAUTIONs consist of four parts: heading (WARNING, CAUTION, or icon), a statement of the hazard, minimum precautions, and possible results if disregarded. NOTEs are used in this manual to highlight operating or maintenance procedures, practices, conditions, or statements which are not essential to protection of personnel or equipment. NOTEs may precede or follow the step or procedure, depending upon the information to be highlighted. The headings used and their definitions are as follows:

WARNING

Highlights an essential operating or maintenance procedure, practice, condition, statement, etc., which if not strictly observed, could result in injury to, or death of, personnel or long term health hazards.

CAUTION

Highlights an essential operating or maintenance procedure, practice, condition, statement, etc., which if not strictly observed, could result in damage to, or destruction of, equipment or loss of mission effectiveness.

NOTE

Highlights an essential operating or maintenance procedure, condition, or statement.

3 HAZARDOUS MATERIALS WARNINGS.

Hazardous Materials Warnings are provided through use of the following Hazard Symbols. Consult the HAZARDOUS MATERIALS DESCRIPTION or Safety Data Sheet (SDS) (formerly MSDS) (Occupational Safety and Health Administration (OSHA) Form 20 or equivalent) for specific information on hazards, effects, and protective equipment requirements. MSDS and SDS may be used interchangeably. If you do not have an SDS for the material involved, contact your supervisor, or the base Safety or Bioenvironmental Engineering Offices.

3.1 Hazardous Materials Icons. The following icons are used throughout Air Force technical manuals to indicate the use of hazardous materials:

The symbol of a human figure in a cloud shows that the material gives off vapors that are a danger to life or health.

The rapidly expanding symbol shows that the material may explode if subjected to high temperatures, sources of ignition or high pressure.

The symbol of a person wearing goggles shows that the material will injure eyes.

The symbol of a flame shows that the material can ignite and burn.

The symbol of a skull and crossbones shows that the material is poisonous or a danger to life.

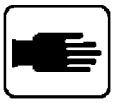

The hand symbol shows a material that can irritate the skin or enter the body through the skin and cause a health hazard.

3.2 Hazardous Materials Description. The following detailed HAZMAT warnings pertain to materials or substances used in connection with procedures called out or described in this technical manual. Use these advisory warnings and

their associated precautions in conjunction with the current SDS for each material or substance. If there is conflict between this safety summary and the SDS, the SDS takes precedence.

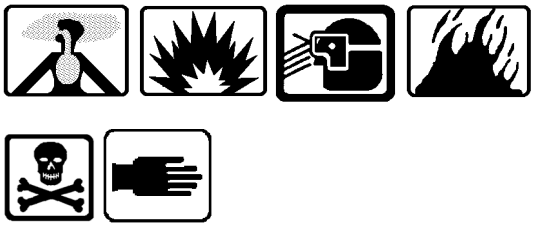

ADHESIVE, PU-156 1

Adhesive, PU-156, is highly flammable and an eye, skin and respiratory irritant. Harmful if inhaled. Repeated exposure may cause skin dryness. Avoid contact with skin and eyes and avoid breathing vapors. Do not ingest. Keep away from heat, sparks and flame. Appropriate skin and eye protection must be worn. Use in a well ventilated area.

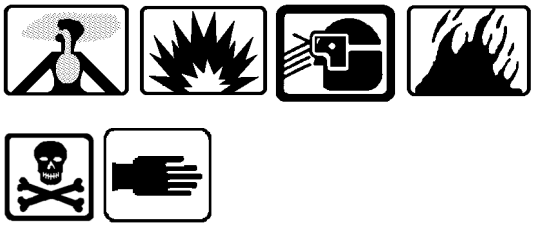

ADHESIVE, 82C32 2

Adhesive, 82C32, is highly flammable and an eye, skin and respiratory irritant. Harmful if inhaled. Repeated exposure may cause skin dryness. Avoid contact with skin and eyes and avoid breathing vapors. Do not ingest. Keep away from heat, sparks and flame. Appropriate skin and eye protection must be worn. Use in a well ventilated area.

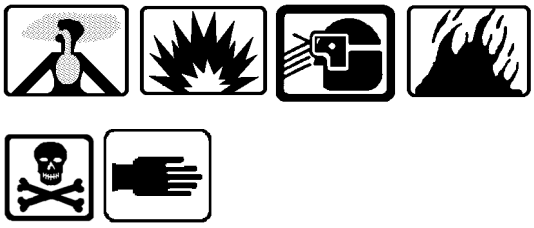

ADHESIVE, LP729 3

Adhesive, LP729, is highly flammable and an eye, skin and respiratory irritant. Harmful if inhaled. Repeated exposure may cause skin dryness. Avoid contact with skin and eyes and avoid breathing vapors. Do not ingest. Keep away from heat, sparks and flame. Appropriate skin and eye protection must be worn. Use in a well ventilated area.

4 SAFETY PRECAUTIONS.

The following safety precautions shall be observed while performing procedures in this manual.

- Dangerous voltages are present at system connectors. Ensure power is OFF prior to connecting or disconnecting cables.
- Do not wear metal frame glasses, rings, watches, or other metal jewelry while working on electronic equipment.
- Some cleaning materials specified herein are flammable and/or toxic. Keep away from open flame or other ignition sources. Provide adequate ventilation and avoid skin/eye exposure.
- Cleaning with compressed air can create airborne particles that may enter eyes or penetrate skin. Pressure shall not exceed 30 pound-force per square inch, gauge (PSIG). Wear goggles. Do not direct compressed air against skin.

CHAPTER 1
RESPONSIBILITIES, QUALIFICATIONS AND TRAINING

1.1 REPAIR RESPONSIBILITY.

Field-level maintenance organizations shall be responsible for accomplishing normal fuel systems repair. If specialized personnel, equipment, and/or facilities are required, but not available at the organizational level, assistance shall be requested from the appropriate ALC in accordance with TO 00-25-107, MAJCOM Aircraft Fuel System Functional Manager/Superintendent, the Weapons System Team/Manager and the OPR for this technical order.

1.2 AUTHORITY.

The provisions of this manual are directive in nature and are applicable to military and civilian personnel directly, or indirectly, involved with fuel systems repair. In addition to the requirements of this manual, civilian contractors are responsible for meeting the requirements of federal, state and local laws, the applicable National Fire Protection Association (NFPA) and Occupational Safety and Health Administration (OSHA) directives. AFI 91-203, Air Force Consolidated Occupational Safety Instruction, provides authority for this manual to contain safety and health requirements for: fuel cell/tank repair, fuel systems repair, fuel systems repair facilities and related areas.

1.2.1 Definitions.

a. WARNING - Highlights an operating/maintenance procedure, practice, condition or statement which, if not strictly observed, could result in injury to, or death of, personnel. Non-compliance may also cause long term health hazards.

b. CAUTION - Highlights an operating/maintenance procedure, practice, condition or statement which, if not strictly observed, could result in damage to, or destruction of, equipment. Non-compliance may also cause loss of mission effectiveness.

c. NOTE - Highlights an essential operating/maintenance procedure, practice or statement.

d. Shall and Will - Indicate mandatory requirements. Will is also used to express a declaration of purpose.

e. Should - Indicates a preferred method of accomplishment.

f. May - Indicates an acceptable, optional or suggested means of accomplishment.

1.3 CONFLICT.

1.3.1 General. Every attempt is made to keep this technical order current with applicable safety, health and environmental directives.

1.3.2 Conflict with AFOSH/OSHA Standard, AFI 91-203 or Federal Directive. When guidance in this technical order conflicts with an AFOSH/OSHA Standard or other federal directive, consult with the MAJCOM Aircraft Fuel Systems Functional Manager/Superintendent.

1.3.3 Conflict with State or Local Directives. When guidance in this technical order conflicts with state or local directives, resolution shall be sought through that agency with assistance from the respective local wing agency (i.e., Safety, Bio-environmental (BEF), Fire Protection Services) and the MAJCOM Aircraft Fuel Systems Functional Manager/Superintendent.

1.3.4 Conflict with General Series Technical Orders. When this technical order conflicts with other general series or policy and procedures technical orders, the requirements of this technical order shall take precedence.

1.3.5 Conflict with Weapons System Technical Orders. When this technical order conflicts with weapons system or commodity technical orders, the requirements of the weapons system or commodity technical order shall take precedence except for general fuel systems safety, health and fuel systems facility-related issues.

1.3.6 Application of Procedures. The general safety, health and maintenance procedures of this technical order can be applied to drop, external, ferry, Benson and weapons bay fuel tanks. Specific repair procedures for these types of fuel tanks are generally included in a commodity technical order. The requirements and procedures in this technical order can be used to repair all types of integral tanks/cells.

1.4 PERSONNEL.

1.4.1 General. This chapter addresses the responsibilities, qualifications, and training requirements for personnel, directly or indirectly, responsible for fuel systems repair. Con-

tractors performing work to the requirements of this manual are expected to meet the same, or equivalent, requirements of their Department of the Air Force counterparts.

1.4.2 Common Duty Titles. The most common, or accepted, position titles are provided for military and civil service members of the Department of the Air Force. Table 1-1 is provided as guidance for determining Civil Service equivalents to military positions.

Table 1-1. Position Equivalents

Military Duty Position	Civil Service Equivalent
Maintenance Group Commander (MXG/CC)	Production Division Chief for each Directorate
AFSC 2A6X4	WG-4361-XX
2A3X3F (RPA Mechanic)	WG-8801-XX
	WG-8852-XX
	WG-8268-XX
RPA Mech Section Chief	Other WG Series (as designated by local management)
Fuel Systems Section Chief	WS-8268-XX

1.5 TRAINING AND QUALIFICATIONS.

1.5.1 General.

1.5.1.1 Mishaps do not happen. They are usually caused by complacency and deviation from established standards, directives, and/or accepted practices and are preventable. Proper training, qualifications, and adherence to safety are essential to an accident-free work environment.

1.5.1.2 Personnel, to include non-fuel systems, shall be fully trained and qualified, as required by this chapter, prior to performing fuel tank/cell entries for repair/inspection. Training and recertification for personnel that require entry into a fuel/tank cell shall be accomplished initially, annually or as often as required by the course syllabus, and documented as required. The minimum frequency of training (FOT) is identified next to the requirements outlined in Paragraph 1.5.2.7.2, Paragraph 1.5.2.8.2 and Paragraph 1.5.2.9.2. Documentation shall be maintained by the duty section that requires the training.

1.5.1.3 All required qualification training will be provided by either qualified individuals within the Fuel Systems Repair Section/RPA Mech Repair Section, or the responsible support agency. Lesson/training plans shall be approved, as required, by the agency, or local representative that mandates the training.

1.5.1.4 Aircraft maintenance sections, other than Fuel Systems Repair/RPA Mech Repair Section (e.g., Quality Assurance, Electro-Environmental, Safety, Structural Repair, Metals Technology, Corrosion, etc.), that may require access into a fuel tank/cell shall ensure a sufficient quantity of confined space entry qualified personnel within the duty section to meet daily work requirements.

1.5.2 Personnel/Office Responsibilities, Training and Qualifications.

1.5.2.1 MXG/CC - Production Division Chief Responsibilities.

a. Shall appoint an Entry Authority.

b. Shall be responsible for safe execution of fuel tank/cell entries.

c. Shall review, approve and sign the Master Entry Plan (MEP), annually.

d. Shall designate fuel systems repair facilities/areas.

e. Shall ensure availability and compliance with technical orders and/or operating instructions for equipment used in fuel systems repair facilities/areas.

f. Shall ensure compliance with safety, health and environmental instructions/directives.

g. Should coordinate on material and equipment substitutions.

h. May, when required, substitute non-2A6X4 personnel for the Equipment Monitor/Runner.

i. May, when required, coordinate on waiver of certain safety and health requirements.

1.5.2.2 Safety Office Responsibilities.

a. Shall coordinate on, and sign the MEP annually.

b. Shall assist with development of the Emergency Response and Rescue Plan.

c. Shall observe the annual fuel systems Emergency Response and Rescue Plan exercise and ensure the results/findings are documented.

d. Shall coordinate on approval of fuel systems repair facilities/areas.

e. Shall be the wing focal point for confined space issues.

f. Should provide training on subject matter for which they have expertise.

g. Should coordinate on equipment substitutions.

1.5.2.3 Bioenvironmental Engineering Flight (BEF) Responsibilities.

a. Shall coordinate on, and sign the MEP annually.

b. Shall provide guidance on the use of personal protective clothing and equipment.

c. Shall conduct annual surveys as required by applicable directives.

d. Should provide training on subject matter for which they have expertise.

1.5.2.4 Fire Protection Services Responsibilities.

a. Shall coordinate on, and sign the MEP annually.

b. Shall coordinate on approval of fuel systems repair facilities/areas.

c. Shall assist with development of the Emergency Response and Rescue Plan.

d. Shall participate in the fuel systems Emergency Response and Rescue Plan exercise annually.

e. Should provide training on subject matter for which they have expertise.

1.5.2.5 Fuel Systems Section Chief/RPA Mech Section Chief. The Fuel Systems Section Chief/RPA Mech Section Chief (regardless of AFSC or equivalent civilian designation) within the Fuel Systems Section that is held accountable to the Squadron, Group, Wing Commander, or civilian equivalent, for the safe conduct of daily fuel systems maintenance operations.

1.5.2.5.1 Fuel Systems Section Chief/RPA Mech Section Chief Responsibilities.

a. Shall be responsible for ensuring safe fuel tank/cell entries through compliance with the applicable checklists, Safety, Health and Environmental AFOSH Standards, AFI 91-203, directives, technical orders, MEP and Entry Permit.

b. Shall ensure availability and serviceability of tools, test and support equipment required to perform safe fuel systems repair in accordance with the applicable technical orders, AFOSH Standards, AFI 91-203 and directives.

c. Shall ensure availability and serviceability of personal protective clothing and equipment required for safe fuel systems repair in accordance with applicable technical orders, AFOSH Standards, AFI 91-203 and directives.

d. Shall author and maintain currency of the MEP.

e. Shall be the Entry Authority.

f. Shall designate and authorize Alternate Entry Authorities to act as the Entry Authority in the event of their absence.

g. Shall assist authors with development of the Emergency Response and Rescue Plan.

h. Shall assist authors with development of training plans for confined space and fuel tank/cell entries.

i. Shall assist authors with development of severe weather shutdown procedures.

j. Shall ensure compliance with the proper use of personal protective clothing and equipment for fuel tank/cell entries.

k. Shall ensure there is a sufficient quantity of Entrants qualified within the duty section to support daily operations.

l. Shall ensure there is a sufficient quantity of Attendants qualified within the duty section to support daily operations.

m. Shall ensure there is a sufficient quantity of Equipment Monitor/Runner(s) qualified within the duty section (and outside of the duty section, if required) to support daily operations.

1.5.2.6 Entry Authority/Designated Alternate. An Entry Authority or Designated Alternate is the person (regardless of AFSC or equivalent civilian designation) within the Fuel Systems Section that is held accountable to the Squadron, Group, Wing Commander, or civilian equivalent, for the safe

conduct of daily fuel systems repair operations. The Entry Authority and Fuel Systems Section Chief/RPA Mech Section Chief is usually the same person. The Alternate Entry Authorities, as designated on the MEP, are the personnel that have been given the authority to assume full responsibility for the safe conduct of fuel systems repair in the absence of the Entry Authority.

1.5.2.6.1 Entry Authority/Designated Alternate Responsibilities.

a. Shall be responsible for ensuring safe fuel tank/cell entries through compliance with the applicable checklists, Safety, Health and Environmental AFOSH Standards, AFI 91-203, directives, technical orders, MEP and Entry Permit.

b. Shall issue or cancel entry permits, as necessary.

c. Shall complete, sign and ensure compliance with each Entry Permit.

d. Shall ensure there is a sufficient quantity of Entrants qualified and available.

e. Shall ensure there is a sufficient quantity of Attendants qualified and available.

f. Shall ensure there is a sufficient quantity of Equipment Monitor/Runner(s) qualified and available.

g. Shall implement severe weather shutdown plan.

h. May authorize the Attendant to monitor multiple fuel tanks/cells, provided they are capable of maintaining effective communication with the Entrants.

i. May authorize the Equipment Monitor/Runner to monitor multiple repair areas/operations provided they are capable of maintaining effective communication with the Attendants.

1.5.2.7 Entrant. An Entrant is any person that physically enters an entry permit-required confined space to perform fuel tank/cell repair. During extended periods of fuel/tank cell maintenance, personnel may change positions; therefore, the Entrant could become the Attendant or Equipment Monitor/Runner at any time. Personnel must be knowledgeable of the responsibilities associated with the position they have been designated to assume and meet the prerequisite qualifications.

1.5.2.7.1 Entrant Responsibilities.

a. Shall be responsible for executing safe fuel tank/cell entries through compliance with the applicable checklists, Safety, Health and Environmental AFOSH Standards, AFI 91-203, directives, technical orders, MEP and Entry Permit.

b. Shall obey instructions from the Attendant.

1.5.2.7.2 Entrant Training and Qualification Requirements. As a minimum, the Entrant shall:

a. Be respirator qualified (As a minimum, FOT is initial and every 12 months as required by AFI 48-137).

b. Be CPR qualified (As a minimum, FOT is initial and refresher every 24 months).

c. Be trained/qualified on confined space and entry procedures, documentation requirements, and knowledgeable of the associated hazards (As a minimum, FOT is initial and refresher every 12 months).

d. Be trained/qualified on the use of atmospheric monitoring equipment and testing confined space atmospheres (As a minimum, FOT is initial).

e. Have had weapons system specific fuel tank/cell familiarization training (As a minimum, FOT is initial).

f. Be trained on self-rescue procedures (As a minimum, FOT is initial and refresher every 12 months).

g. Be trained/qualified on the Emergency Response and Rescue Plan procedures (As a minimum, FOT is initial and refresher every 12 months).

h. Be trained/qualified on the use of fuel systems specific support equipment (As a minimum, FOT is initial).

i. Be trained on the proper use, inspection and wear of personal protective clothing and equipment (As a minimum, FOT is initial and refresher every 12 months).

j. Be trained on use of communication equipment (As a minimum, FOT is initial).

k. Be trained on recognizing symptoms of overexposure to chemicals, solvents and fuels (As a minimum, FOT is initial and refresher every 12 months).

1.5.2.8 Attendant. An Attendant is any person that remains outside an entry permit-required confined space and monitors the Entrant through use of voice, visual and/or auditory signals to ensure continued communication and safety. During extended periods of fuel/tank cell repair, personnel may change positions; therefore, the Attendant could become the Entrant or Equipment Monitor/Runner at any time. Per-

sonnel must be knowledgeable of the responsibilities associated with the position they have been designated to assume and meet the prerequisite qualifications.

1.5.2.8.1 Attendant Responsibilities.

a. Shall be responsible for ensuring safe execution of fuel tank/cell entries through compliance with the applicable checklists, Safety, Health and Environmental AFOSH Standards, AFI 91-203, directives, technical orders, MEP and Entry Permit.

b. Shall never permit entry into an IDLH atmosphere.

c. Shall limit fuel tank/cell entry to only qualified and authorized personnel.

d. Shall have overall responsibility for monitoring the fuel tank/cell for hazards.

e. Shall ensure atmospheric readings are taken and documented on the entry permit in accordance with Chapter 5. Shall also ensure the atmospheric monitoring equipment serial number is recorded on the entry permit.

f. Shall have overall responsibility for monitoring the Entrant through use of voice, visual and/or auditory signals.

g. Shall order the termination of maintenance and evacuation of fuel tank/cell at the first sign of a hazard or personnel distress.

h. Shall alert the Equipment Monitor/Runner to initiate the Emergency Response and Rescue Plan, if required.

i. Shall act as member of first team rescue in the event of an emergency.

j. May, when authorized, monitor multiple fuel tanks/cells provided they are capable of maintaining effective communication with the Entrants.

1.5.2.8.2 Attendant Training and Qualification Requirements. As a minimum, the Attendant shall:

a. Be respirator qualified (As a minimum, FOT is initial and every 12 months as required by AFI 48-137).

b. Be CPR qualified (As a minimum, FOT is initial and refresher every 24 months).

c. Be trained/qualified on confined space and entry procedures, documentation requirements and knowledgeable of the associated hazards (As a minimum, FOT is initial and refresher every 12 months).

d. Be trained/qualified on the use of atmospheric monitoring equipment and testing confined space atmospheres (As a minimum, FOT is initial).

e. Have had weapons system specific fuel tank/cell familiarization training (As a minimum, FOT is initial).

f. Be trained on self-rescue procedures (As a minimum, FOT is initial and refresher every 12 months).

g. Be trained/qualified on the Emergency Response and Rescue Plan procedures (As a minimum, FOT is initial and refresher every 12 months).

h. Be trained/qualified on the use of fuel systems specific support equipment (As a minimum, FOT is initial).

i. Be trained on the proper use, inspection and wear of personal protective clothing and equipment (As a minimum, FOT is initial and refresher every 12 months).

j. Be trained on use of communication equipment (As a minimum, FOT is initial).

k. Be trained on recognizing symptoms of overexposure to chemicals, solvents and fuels (As a minimum, FOT is initial and refresher every 12 months).

1.5.2.9 Equipment Monitor/Runner. An Equipment Monitor/Runner is any person that physically monitors the fuel systems repair area for hazards and support equipment to ensure safe and continuous operation and ensures unauthorized personnel do not enter the repair area. Additionally, in the event of an emergency, they are responsible for notifying rescue personnel in accordance with the Emergency Response and Rescue Plan. During extended periods of fuel/tank cell repair, personnel may change positions; therefore, if trained/qualified, the Equipment Monitor/Runner could become the Attendant or Entrant at any time. Personnel must be knowledgeable of the responsibilities associated with the position they have been designated to assume and meet the prerequisite qualifications.

1.5.2.9.1 Equipment Monitor/Runner Responsibilities.

a. Shall have overall responsibility for monitoring the facility/repair area for hazards and unauthorized personnel.

b. Shall monitor essential fuel tank/cell entry support equipment within the facility/repair area to ensure safe and continuous operation.

c. Shall immediately notify the Attendant if a hazard develops or support equipment becomes inoperative.

d. Shall summon rescue team in accordance with the Emergency Response and Rescue Plan.

e. Shall act as member of first team rescue in the event of an emergency.

f. May, when authorized, monitor multiple repair areas provided they are capable of maintaining effective communication with the Attendants.

g. May perform duties of the Attendant, if qualified, during rescue but shall not enter the fuel tank/cell.

1.5.2.9.2 Equipment Monitor/Runner Training and Qualification Requirements. As a minimum, the Equipment Monitor/Runner shall meet the training and qualification requirements of the Attendant if they are to assume the Attendant's position during an emergency response and rescue.

1.5.2.9.2.1 Any person designated to assume the position of the Equipment Monitor/Runner shall meet the following minimum qualifications:

a. Be CPR qualified (As a minimum, FOT is initial and refresher every 24 months).

b. Be knowledgeable of the associated hazards of the fuel systems repair operations (If not qualified, FOT is prior to assuming duties).

c. Be trained on the Emergency Response and Rescue Plan procedures (If not qualified, FOT is prior to assuming duties).

d. Be trained on the use of fuel systems specific support equipment (If not qualified, FOT is prior to assuming duties).

e. Be trained on use of communication equipment (If not qualified, FOT is prior to assuming duties).

f. Be trained on hangar door operation, if applicable (If not qualified, FOT is prior to assuming duties).

1.5.2.10 Quality Assurance Responsibilities.

a. Shall provide task evaluation and aircraft fuel systems inspection, as required.

b. Shall ensure compliance with applicable AFOSH Standards, AFI 91-203, directives, technical orders, MEP and Entry Permit.

1.5.2.10.1 Quality Assurance Training and Qualification Requirements.

a. Shall have either completed a fuel systems repair school or been trained by qualified individuals within the Fuel Systems Repair Section/RPA Mech Repair Section, or the responsible support agency.

b. Shall meet qualifications of an Entrant if entry into a fuel tank/cell for evaluations/inspections is required.

c. Shall receive applicable training and recertification as required by the course syllabus. Training shall be documented and maintained by the Fuel Systems Repair Section/RPA Mech Repair Section.

1.5.2.11 Environmental Management Office Responsibilities. Should provide training on subject matter for which they have expertise.

1.5.2.12 Base Medical Officer Responsibilities.

a. Shall perform medical examinations in accordance with AFOSH Standards, AFI 91-203 and directives.

b. Should assist with development of the Emergency Response and Rescue Plan.

c. Should provide training on subject matter for which they have expertise.

1.5.2.13 Aircraft Program Office Responsibilities.

a. Shall keep technical orders current.

b. Shall provide assistance to field- and depot-level maintenance activities.

c. Shall approve the use of alternate chemicals, solvents, materials and support/test equipment.

d. Shall coordinate equipment/material substitutions with the MAJCOM Aircraft Fuel Systems Functional Manager/Superintendent and TO 1-1-3 OPR.

1.5.2.14 Base Weather Officer Responsibilities. Shall notify applicable agencies to initiate local severe weather shutdown plan/procedures.

1.5.2.15 MAJCOM Aircraft Fuel Systems Functional Manager/Superintendent Responsibilities.

a. Shall provide assistance to field- and depot-level maintenance activities, as required.

b. Should coordinate chemical, solvent, material and support/test equipment/material substitutions with the ASG and TO 1-1-3 OPR.

c. May approve the use of alternate materials/equipment.

1.5.2.16 TO 1-1-3 OPR Responsibilities.

a. Shall keep this technical order current with applicable safety and health directives.

b. Should provide assistance to field, depot and contractor maintenance activities.

c. Should coordinate equipment/material substitutions and changes to this technical order with the MAJCOM Aircraft Fuel Systems Functional Managers/Superintendents and ASG.

d. May approve the use of alternate materials/equipment.

CHAPTER 2
SAFETY, HEALTH AND ENVIRONMENTAL REQUIREMENTS

2.1 PURPOSE.

This chapter contains the safety, health and environmental requirements necessary to conduct safe fuel tank/cell maintenance.

2.2 GENERAL.

2.2.1 Minimum Requirements. The provisions of this chapter are minimum requirements, for average conditions, and apply to fuel systems and non-fuel systems personnel (i.e., Quality Assurance, Electricians, Safety, Structural Maintenance, Corrosion, Non-destructive Inspection, supervisory personnel, etc.).

2.2.2 Acceptable Risk. Certain hazards are present during fuel systems repair; this is normal. As long as the appropriate precautionary measures are taken, there is no increased risk associated with routine repair operations. Deviations from safety practices that increase the risk to the worker, aircraft or facility shall not be permitted. Supervisory personnel shall ensure equipment is maintained in good working order and personnel adhere to the requirements of this chapter.

2.3 ASSUMPTIONS AND ALTERNATIVES.

Some fuel tank/cell repair and inspection is accomplished without fuel or other flammable materials being present. In these cases, the MXG/CC, or equivalent, may, with coordination/concurrence from Safety, BEF and Fire Protection Services, rule that certain requirements of this chapter may be waived. This may be done after a review of the work procedures, an assessment of the work environment, and documentation of the absence of hazards. The waiver is only applicable to requirements originating in this manual and is not extendable to requirements originating in weapons system technical orders, OSHA, AFOSH STDs, AFI 91-203, or other directives. The requirement for a confined space entry program and permit system shall never be waived.

2.4 HAZARDS.

2.4.1 Static Electricity. Static electricity is frequently generated when two unlike materials are brought into contact and then separated. Some common means of generating static charges are personnel removing/changing clothes, removing fuel foam, dust blowing across surfaces or liquid flowing through pipes. The most practical method to protect against static charge buildup is to dissipate the static charges through proper connections to the ground. Refer to TO 00-25-172 for further information.

2.4.2 Confined Spaces and Enclosed Areas. Confined spaces create a unique hazard due to limited entry/exit points and potential atmospheric hazards. All Fuel Systems Repair Sections shall have a confined space training program and all personnel shall be trained. To help mitigate the risks associated with entry, the confined space shall be assessed for environmental/physical hazards. Entry to the space shall be limited to authorized individuals and rescue procedures shall be in place prior to any entry. The requirements of this chapter and the applicable 91- and 48- series AFOSH Standards, AFI 91-203 shall be followed to prevent accidental death or injury from entrapment in confined spaces.

2.4.2.1 Some aircraft have fuel tanks which are separated into multiple compartments. For the purposes of this technical order, each compartment will be treated as an individual fuel tank. Each compartment will be purged and depuddled, to the extent necessary, before opening/entering the next compartment.

2.4.3 Hot Work. Hot work (e.g., cutting, welding, soldering, brazing or any other operation that can provide a possible source of ignition) will generate temperatures high enough to ignite fuel, solvents and other materials present during fuel systems repair. Special care must be taken to eliminate the combustion hazard associated with hot work. Refer to Table 5-1. The requirements of this technical order and AFI 91-203 shall be followed. Fire Protection Services shall approve all hot work associated with fuel systems repair.

2.4.4 Chemicals. Solvents, chemicals or other products used to repair fuel tanks/cells may be classified as flammable or combustible depending on their flash point. In addition to the fire hazard, they may contain toxic substances. The requirements of this chapter, AFI 91-203, and the applicable 48-series AFOSH Standards shall be followed to prevent ignition of, or overexposure to, these compounds. A Material Safety Data Sheet (MSDS) shall be available for each solvent, chemical or product used. Manufacturer's warnings and cautions shall be observed. Contact BEF for further guidance on the applicable personal protective clothing and equipment to be used when working with solvents, chemicals or other products.

2.4.5 Radar and Communications Systems. Certain radar and communications systems, especially high-powered ground-based systems, are capable of producing peak power densities intense enough to cause unintentional ignition of volatile fuels when used in close proximity to fuel servicing, storage or repair areas. Guidelines for separation distances are contained in TO 31Z-10-4. Assistance may be requested from the OPR for Radio Frequency Radiation Program, BEF.

2.4.6 Fuels. Aircraft fuels are classified as either combustible or flammable liquids. AVGAS and JP-4 are flammable liquids, have a large percentage of low flash point hydrocarbons and will create a readily ignitable vapor-air concentration at ambient temperatures. JP-5, JP-8, Jet A, and Jet A-1 are combustible liquids, comprised of a larger percentage of higher flash point hydrocarbons, and do not as readily form flammable vapor-air concentrations at ambient temperatures. At temperatures below the flash point, fuels are not likely to generate sufficient vapors to form a vapor-air concentration in the explosive range. Military specification fuels (JP-series) require the use of antistatic additives; commercial fuels (Jet-A, Jet-A1, Jet-B) do not.

2.4.6.1 The values of Table 2-1 are approximate since the fuels have a flash point range. JP-5 and JP-8 flashpoint are the specification minimums.

Table 2-1. Common Jet Fuel Properties and Additives

Jet Fuel Properties					
	JP-4	JP-8	JET A-1	JET A	JP-5
FLASH POINT °F	-20	100	100	100	140
FREEZE POINT °F	-72	-53	-53	-40	-51
FLAMM °F	-20 - 80	100 - 170	100 - 170	100 - 170	140 - 220
LBS/GAL	6.3	6.7	6.7	6.7	6.8
VAPOR PRESSURE	2-3	NIL	NIL	NIL	NIL
AROMATICS %	25	25	20	20	25
BTU/GAL (TYPICAL)	118900	124500 (+4.7%)	124500	124500	126000 (+5.9%)
Jet Fuel Additives					
	JP-4	JP-8	JET A-1	JET A	JP-5
FSII	YES	YES	NO*	NO*	YES
CORR/LUBR	YES	YES	NO*	NO*	YES
CONDUCTIVITY	YES	YES	YES	NO*	NO
ANTI-OXIDANT	COND	COND	NO*	NO*	YES
METAL DETACT	OPT	OPT	NO*	NO*	OPT
TRACER	OPT	OPT	NO	NO	OPT
COND = IF HYDRO TREATED					
OPT = OPTION OF SUPPLIER					
* = APPROVED BUT NOT TYPICALLY USED					

Additional Jet Fuel Flash Points	
Fuel Type	Flashpoint
AVGAS	-50 °F
JP-10	130 °F
JPTS	110 °F

2.4.6.2 In addition to a fire hazard, fuels also contain toxic substances such as benzene, toluene and xylene. Exposure to high levels of fuel/vapors may cause headaches, dizziness or euphoria. Dermal exposure may result in itchy, red, peeling or tender skin. To prevent ignition of, or overexposure to, aircraft fuel, the requirements of this chapter, AFI 91-203 and applicable 48- series AFOSH Standards shall be followed.

2.4.7 Ancillary Systems. Fire Suppression Systems, On-board inerting gaseous generating system (OBIGGS) and hydrazine systems require extreme caution. Refer to applicable weapons system technical orders and applicable directives for more specific guidance.

2.4.8 Environmental Hazards.

2.4.8.1 Some procedures in this technical order require chemicals that generate hazardous waste. Additionally, some solvents claiming to be "biodegradable" are also capable of generating a hazardous waste stream. Vigilance is required by all personnel to ensure hazardous materials/waste is handled in accordance with the MSDS and local/federal guidance to prevent contamination of the environment.

2.4.8.2 The use of Ozone Depleting Substances (ODS) is slowly being phased out. ODSs may only be used when no other alternative is available; approval for continued use must be granted in accordance with Air Force policy.

2.4.8.3 Contact the local Environmental Management Office for further information and guidance.

2.4.9 Weather Conditions.

2.4.9.1 Climatic Conditions. Extreme weather coupled with fuel systems repair can create dangerous conditions for personnel and equipment. Personnel shall closely monitor weather conditions during open fuel tank/cell repair and take the necessary precautions to mitigate the associated risks.

2.4.9.1.1 Cold, dry and windy weather can cause an increased safety risk due to the rapid build-up of static electricity and the strength of the discharge. Personnel shall make every attempt to ground themselves more often during these conditions. Extreme cold weather also causes rapid freezing of the skin.

2.4.9.1.2 Hot weather causes fuel to evaporate quicker and makes maintaining PPM (LEL) at authorized levels more difficult. Personnel shall ensure proper purging, ventilation and atmospheric monitoring procedures are used. Extreme hot weather can also cause heat-related personnel injuries/illnesses.

2.4.9.1.3 High winds 30 knots or higher, as defined by the local severe weather checklist or OI, can damage aircraft/injure personnel by creating a hazard from falling or wind blown materials/equipment. High winds do not affect aircraft that are fully enclosed within a hangar.

2.4.9.1.4 Thunderstorms/lightning can cause power outages, ignition of fuel vapors or electrocution of personnel. See Paragraph 2.4.9.2 for notification procedures.

2.4.9.2 Severe Weather Notification. The MXG/CC, or equivalent, in coordination with the Base Weather Office, Safety and Fire Protection Services, shall develop a local checklist or OI that addresses more specific local severe weather notification procedures and precautionary measures.

2.4.9.2.1 As a minimum, notification through the applicable agencies to the Fuel Systems Repair Section shall occur when severe weather conditions are within five nautical miles.

2.4.9.2.2 When severe weather is within five nautical miles of the repair site, the Entry Authority or Designated Alternate shall maintain communication with the Base Weather Office to gauge the direction and speed of the severe weather. Open fuel tank/cell maintenance may continue however, depending on the complexity of the repair task and weather conditions, the scope of the operation may need to be scaled back to allow operations to be suspended quickly.

2.4.9.2.3 Open fuel tank/cell maintenance shall be suspended when severe weather is within three nautical miles. When operations are suspended, access panels/doors, filler caps and other openings shall be temporarily closed. If temporary panels are used, panels will be manufactured from non-conductive materials.

2.5 MEDICAL REQUIREMENTS.

2.5.1 Physical Examinations and Requirements.

2.5.1.1 Design, development and execution of employee health programs are covered in AFI 48-145, Occupational Health Program.

2.5.1.2 Specific medical surveillance requirements are defined in AFI 48-145, Controlling Exposures to Hazardous Materials. These surveillance requirements should be considered the minimum necessary to ensure worker health and safety. However, in accordance with AFI 48-145, the base-level Occupational Health Working Group may add to the requirements based on a comprehensive review of the exposure risk and medical literature. Annual physicals are required as a minimum for full time technicians.

2.5.1.3 Personnel required to wear respirators must be medically cleared prior to fit testing in accordance with AFI 48-137, Respiratory Protection Program.

2.5.2 Medical Treatment.

2.5.2.1 If a worker's eyes are exposed to fuel, they shall be flushed immediately with fresh water and medical treatment obtained as soon as possible. If a worker's skin is ex-

posed to fuel, it must be thoroughly cleansed with mild soap and water as soon as possible. Medical attention shall be obtained if abnormal conditions or symptoms develop/persist.

2.5.2.2 Personnel ingesting fuel or other chemicals shall be immediately taken to a medical facility for treatment. Do not induce vomiting unless authorized by medical personnel.

2.6 PROTECTIVE CLOTHING AND EQUIPMENT.

WARNING

Failure to wear/use personal protective clothing/equipment when handling hazardous materials, or performing hazardous procedures, could lead to severe illness, injuries or death.

2.6.1 Personal Protective Clothing.

2.6.1.1 Coveralls. Personnel performing open fuel tank/cell repair shall wear approved coveralls (Tri-Layer or white cotton). To ensure maximum protection, coveralls shall be properly worn (i.e., extremities covered and velcro closed). Coveralls that have been wetted with fuel or solvents shall be washed before being worn again. Coveralls that fail to adequately protect the worker due to cuts, tears or excessively worn material shall be discarded.

2.6.1.1.1 Tri-Layer Coveralls. Tri-Layer coveralls shall be worn during wet fuel operations, fuel foam removal/installation and during fuel tank/cell entry operations until the fuel tank/cell has been completely depuddled, dried and ventilated with no chance of leakage of fuel from removal of manifolds, pumps, valves, etc.

2.6.1.1.2 White Cotton Coveralls. White cotton coveralls with enclosed cuffs and anklets may be worn after the completion of wet fuel operations (e.g., fuel cell installation, new component installation, etc.). Coveralls with pockets, buttons or zippers present a foreign object hazard and shall not be used for open fuel tank/cell repair.

2.6.1.1.3 Utility Coveralls. Coveralls (other than Tri-Layer or white cotton) may be worn during fuel systems repair tasks that do not require fuel tank/cell entry.

2.6.1.2 Undergarments. Any undergarments can be worn as long as the approved coveralls are worn over them.

2.6.1.3 Chemical-Resistant Clothing. Personnel may use additional chemical-resistant clothing if approved by BEF. This clothing will be covered by approved outer garments to prevent discharge of static electricity.

2.6.1.4 Footwear. Personnel entering fuel systems repair facilities/areas shall remove footwear with exposed spark-producing nails or metal plates on the walking surfaces.

2.6.1.4.1 Cotton or cotton blend socks shall be worn during open fuel tank/cell entry.

2.6.1.4.2 Clean, serviceable and static-resistant or neoprene booties shall be worn during fuel cell entries. Shoes or boots shall not be worn.

2.6.1.4.3 Clean shoes or boots with or without footwear covers may be worn in integral fuel tanks. If footwear covers are not worn, shoes or boots shall be inspected prior to every fuel tank entry to ensure foreign objects are not introduced into the fuel tank.

2.6.1.5 Gloves. Approved gloves shall be used during depuddling operations, application of cleaners/solvents, removal of fuel foam and as otherwise directed. They shall be worn for the application of sealants and adhesives. Hand and barrier creams are not considered suitable protection but may be used under an approved glove.

2.6.1.6 Head Coverings. Head coverings shall be worn whenever a potential exposure to fuel (e.g., pulling fuel foam/components from overhead) exists. The head covering must be clean, serviceable and static-resistant. Head coverings shall also be worn when accomplishing curing-type sealant repair. The head covering will prevent scalp oils from contaminating aircraft surfaces and minimize the possibility of getting sealant in the hair.

2.6.2 Personal Protective Equipment.

2.6.2.1 Respirators. BEF shall provide guidance on the minimum respiratory protection requirements. Unless specifically authorized by BEF, air-supplied, full-face respirators shall be worn. Respirators shall be maintained in accordance with AFI 48-137 and the locally-developed respirator protection program operating instruction.

2.6.2.1.1 The Entry Authority/Supervisor will ensure the selected respirator's NIOSH certification is maintained, and the air pump pressure supplied to the respirator meets the respirator manufacturer's requirements.

2.6.2.1.2 There shall be a minimum of three serviceable and properly-sized respirators connected to the breathing air supply system during open fuel tank/cell repair; one for the Entrant; one for the Attendant, and an emergency respirator. Emergency respirator(s) shall be sized to fit the Entrant(s).

2.6.2.1.3 The intake for breathing air equipment shall be positioned outside of the repair area, upwind and away from vehicle/equipment exhaust, ventilating/purging exhaust ducts, or other potentially contaminated areas to ensure a clean air supply.

2.6.2.1.4 Backup breathing air systems are not required for open fuel tank/cell repair operations provided applicable safety precautions associated with general open fuel tank/

cell repair, confined space program (MEP and Entry Permit) and handling of hazardous materials are strictly adhered to.

2.6.2.1.4.1 If back up breathing air systems are used, compressed bottles or cylinders, regardless of type, shall not be worn or taken into a fuel tank. Compressed cylinders shall be handled in accordance with TO 42B5-1-2. Air shall be sampled for purity in accordance with TO 42B-1-22.

NOTE

This requirement does not apply to rescue operations from Immediately Dangerous to Life and Health (IDLH) environments.

2.6.2.2 Eye Protection. Personnel performing work that has the potential to irritate the eyes or expose them to liquids, dusts, flying objects, etc., shall wear appropriate eye protection (i.e., goggles, full-face respirator). Contact lenses may be worn in conjunction with protective eyewear.

2.6.2.3 Hearing Protection. BEF shall determine the minimum hearing protection requirements based on the results of the annual industrial hygiene survey.

2.6.2.4 Padding. Rubber knee and elbow pads may be worn for protection. Non-absorbing padding/mats made of static-free material may be used in fuel tanks/cells for cushioning and protection.

2.6.2.5 Aprons. Aprons may be worn to provide protection from chemical splashes.

2.6.3 Authorized Monitoring Equipment.

2.6.3.1 The Photo-ionization Detector (PID) meters are the only authorized atmospheric monitoring equipment approved for use during open fuel tank/cell repair.

2.6.3.2 The PID uses an ultraviolet lamp to ionize vapor molecules. A 10.6 eV ultraviolet lamp shall be used. Volatile organic compounds (VOC) shall be measured in PPM.

2.6.3.3 Units can purchase any PID meter which meets their particular needs (oxygen, flammability and toxicity) from any reliable manufacturer. However, prior to purchase, the meter selected must be coordinated and approved by the installation Confined Space Program Team (CSPT).

2.6.4 Emergency Rescue and Retrieval Equipment. This equipment may be used to remove incapacitated personnel from fuel tanks/cells and shall be used in accordance with AFI 91-203. Approval for use of these types of equipment requires the Fuel Systems Section Chief to obtain coordination/approval from the Safety, and Fire Protection Services.

2.7 SAFETY PRACTICES.

2.7.1 Controlling Access to a Fuel Systems Repair Area. Restricting entry of unauthorized personnel into the fuel systems repair area is paramount to ensuring safe operations. For the purposes of this technical order, unauthorized personnel are those that are non-essential to the completion of the fuel systems repair action. Access to the fuel systems repair facility/open repair area during fuel systems repair should be restricted through the use of a single point of entry, where possible.

2.7.2 Personal Hygiene. Personnel shall thoroughly wash exposed skin with soap and water after contact with toxic materials, chemicals, solvents, sealants, fuel, etc., prior to eating or smoking.

2.7.2.1 Regardless of prior cleansing, any worker who has had direct contact with fuel (e.g., wet fuel operations) should shower at the end of the shift.

2.7.2.2 Personnel shall not eat, drink, use tobacco products or chew gum in an open fuel systems repair area.

2.7.3 Housekeeping.

2.7.3.1 Fuel systems repair facilities/areas shall be kept clean, orderly and maintained in good repair. As a minimum, facilities/areas shall be inspected at the start of each shift, or more often as deemed necessary, to ensure safe working conditions are maintained. The Fuel Systems Section Chief shall ensure operating, inspection and maintenance instructions are available and followed for non-standard equipment installed in the facility.

2.7.3.2 Chemical-, lubricant-, or fuel-contaminated rags shall be placed in authorized containers. Class I spills shall be cleaned immediately to prevent a fire, slipping or tripping hazard. If a Class II or III spill occurs, the repair operation shall be terminated, power removed and the Fire Protection Services notified. Work shall not resume until the area is deemed safe by Fire Protection Services.

2.7.3.3 Air hoses, ducts, test/support equipment, work stands, etc., whether in use or not, shall be positioned within the fuel systems repair facility/area so they do not create a safety hazard. Sufficient space shall remain around the aircraft to permit expedient egress in the event of an emergency. Non-essential equipment shall not be parked within 10-feet of the aircraft or within a 10-foot radius of fuel tank/cell openings or vents.

2.7.3.4 The fuel systems repair facility shall not be used to store non-fuel systems repair materials, equipment, vehicles, etc., that could create a fire hazard, obstruct aircraft

towing/personnel egress, or hinder fire fighting/rescue operations. Should local conditions necessitate the long-term storage of equipment in the fuel systems repair area, it shall be positioned in accordance with Paragraph 2.7.3.3 and approved in writing by the Fuel Systems Section Chief/RPA Mech Section Chief, Safety and Fire Protection Services. Vehicles of any type (e.g., golf carts, floor sweepers, etc.) shall have the batteries disconnected and the keys removed during open fuel tank/cell repair.

2.7.4 Support and Test Equipment. Rolling support and test equipment used in fuel systems repair facilities/areas shall be equipped with anti-static, non-metallic, rubber or composite wheels. Equipment shall be inspected for serviceability prior to being brought into the fuel systems facility/area.

2.7.4.1 Fire extinguishers, sealant guns and mixers, communication equipment, aircraft jacks and other similar equipment are not considered support equipment.

2.7.4.2 Non-Powered Support Equipment (maintenance stands/platforms, ladders, etc.). Non-powered support equipment shall be used and maintained in accordance with applicable AFOSH Standards, AFI 91-203, technical orders and other directives.

2.7.4.2.1 Maintenance stands/platforms and ladders shall have non-slip step surfaces; these surfaces shall be repaired or replaced if worn/damaged.

2.7.4.2.2 The use of locally-manufactured work platforms should be kept to a minimum. Platforms shall meet the criteria established in AFI 91-203 and be approved by Quality Assurance.

2.7.4.2.3 Tool boxes can be used in conjunction with a maintenance stand as long as the stand was designed to accommodate a tool box. All locally procured stands must be approved by local ground safety office.

2.7.4.3 Powered Support Equipment. Powered support equipment authorized in the fuel systems repair area (MA-1 blower, HDU-13/M heater, explosion-proof fans/blowers, air purifier cart or other explosion-proof/intrinsically-safe equipment) and being used shall be grounded and bonded to the aircraft during open fuel tank/cell repair.

2.7.4.3.1 Powered support equipment required for fuel systems repair, but not authorized within the repair area, shall have cables and hydraulic lines of 50 feet or longer. Equipment shall be positioned outside the repair area and upwind to guard against ignition sources.

2.7.4.4 Test Equipment.

WARNING

- Failure to ensure serviceability of test/support equipment prior to installation and use on the aircraft may result in severe aircraft structural damage or personnel injury/death.
- Failure to remove caps, plugs or cover plates from the aircraft prior to refuel may result in severe aircraft structural damage or personnel injury/death. An in-process inspection (IPI) shall be accomplished prior to fuel tank/cell closures to minimize FOD hazards and to ensure materials, tools and equipment taken into the fuel tank/cells has been removed. The IPI shall be documented in the aircraft's AFTO Forms 781A.

Test equipment installed on aircraft shall be visually inspected for serviceability and current calibration, if required, immediately prior to use.

2.7.4.4.1 An AF Form 1492 shall be attached to the single point refueling receptacle and the aircraft's AFTO Forms 781A documented with the location of each cap, plug, cover plate, test door, etc., installed on the aircraft.

2.7.4.4.2 An inventory checklist shall be developed to account for each cap, plug, cover plate, test door, etc., installed on the aircraft.

2.7.4.4.3 A composite tool kit inventory shall be completed prior to closing any fuel tank/cell access door/panel to ensure accountability for all tools, caps, plugs, cover plates and test equipment.

2.7.4.5 Tools and Tool Boxes.

WARNING

Failure to remove caps, plugs or cover plates from the aircraft prior to refuel may result in severe aircraft structural damage or personnel injury/death. An in-process inspection (IPI) shall be accomplished prior to fuel tank/cell closures to minimize FOD hazards and to ensure materials, tools and equipment taken into the fuel tank/cells has been removed. The IPI shall be documented in the aircraft's AFTO Forms 781A.

Rubber-wheeled, maxi-type toolboxes are authorized inside fuel systems repair facilities/areas without being grounded or bonded.

2.7.4.5.1 Hand-carried tool boxes brought into fuel systems repair facilities/areas shall be placed only on a non-metallic, anti-static composite surface or rubber mat. They shall not be placed on the aircraft or work stands/platforms.

2.7.4.5.2 Tools shall be hand-carried into the fuel tank/cell in non-metallic containers such as fiberboard boxes or canvas bags.

2.7.4.6 Fuel Collection Containers. Fuel shall only be collected in approved safety containers, bowsers or rubber buckets. Containers used for reclaiming fluids will be marked in accordance with AFI 91-203 to denote grade of fuel contained. Locally-manufactured containers shall meet the requirements of TO 00-25-172. Fuels without anti-static additives should not be allowed to free-fall into any container unless absolutely necessary (free-fall shall be kept to a mini-

mum). Drip pans are not approved fuel collection containers and shall be kept free of fuel and oil puddles. Rubber buckets shall be emptied into an approved reclaiming container as soon as possible to prevent a safety or spill hazard.

2.7.5 Electrical Equipment.

WARNING

Replacing a battery in an open fuel systems repair area may cause ignition of fuel vapors and result in severe aircraft structural damage or personnel injury/death. Battery replacement shall be performed outside of the repair area.

2.7.5.1 Aircraft Radar. Separation distances between fuel systems repair facilities/areas and aircraft radar should be provided in the specific weapons system technical orders. If a technical order is not available, or it does not contain separation distances, 300 feet is the required minimum distance (100 feet when using a dummy load). Refer to TO 31Z10-4 for additional information.

2.7.5.2 Non-intrinsically Safe Radios and Cellular Telephones. Non-intrinsically safe radios and all cellular telephones shall remain outside of the open fuel system repair area. (Exception: see paragraph 2.7.5.6 for the use of non-intrinsically safe radios and telephones.)

2.7.5.3 Intrinsically-safe Intercoms, Radios, Mobile Radios and Telephones. Intrinsically-safe radios, mobile radios/intercoms, or telephones listed for NFPA 70, Class I, Division 1, hazardous areas, may be used. Intercoms, radios and telephones are permitted in fuel systems repair facilities/areas to maintain communications between members of the confined space entry team and other personnel. These items shall be maintained, inspected and repaired in accordance with the manufacturer's instructions. Restrictions of TO 31Z10-4 shall apply.

2.7.5.4 Lights. Lights, to include flashlights, lamps and lanterns, used in fuel systems repair facilities/areas shall be intrinsically-safe or listed for NFPA 70, Class I, Division 1, hazardous areas. Changing light bulbs can be done by users. Do not attempt to repair any lights that are certified for Class I, Division 1 or 2 hazardous areas. Disassembly or repair will most likely void any maufacturers' certifications. Therefore, defective lights must be returned to the manufacturer for repair.

2.7.5.4.1 Lights shall be checked for serviceability prior to use. As a minimum, they shall not be cracked, have broken lenses, missing/damaged seals or defective cords/connections.

2.7.5.5 Electronic/Video Personnel Monitors. These systems, when used properly, provide nearly continuous monitoring of personnel and the fuel systems repair area. They may be used to assist with the surveillance of the repair facility/area but shall not be used as a substitute for the Attendant or Equipment Monitor/Runner. Surveillance systems shall be listed for NFPA 70, Class I, Division 1, hazardous areas.

2.7.5.6 Other Electrical Equipment. Other electrical equipment used in fuel systems repair facilities/areas shall be either intrinsically-safe (e.g, tested to MIL-STD-810 or equivalent standard) or approved by competent authority for National Electric Code Class I, Division 1 or 2 hazardous areas. In the event non-approved or non-intrinsically safe equipment (i.e. digital cameras, portable maintenance aids, e-tools, laptop computers, wireless LAN-enabled point-of-maintenance computers, etc) must be used, the fuel tank/cell shall be purged to 300 ppm (5% LEL) or less. The tank/cell must be continuously ventilated & monitored thereafter. Wireless networking systems can be used due to their very low radio-frequency power levels. Battery changing and charging is prohibited, as is the use of alternating current (AC) power adaptors. If any devices are dropped or damaged, remove them from the area immediately. Non-approved or non-intrinsically safe devices can be used anywhere in or around aircraft in fuel tank/cell repair facilities as long the appropriate lower explosive limits (LELs) are met in those areas; however, these types of devices will not be used within three feet of a: fueled aircraft fuel vent outlet, open fuel tank drain, or fuel tank opening during depuddling or purging.

2.7.6 Communication and Visual Aids.

2.7.6.1 Documentation. Accurate and thorough documentation of log books, Information Management Data Systems (CAMS, GO-81, etc.), AFTO Forms 244, 245, 781A, 781K, 427, 428, 95, Condition Tags, etc., related to aircraft/equipment status and maintenance history is a basic, yet critical, form of communication. This documentation serves as a tool for maintenance personnel, analysts, accident investigation teams and others to determine current/historical status of resources and to identify, track and solve problems. All personnel shall ensure timely, thorough and accurate documentation of aircraft and equipment status.

2.7.6.2 In addition to guidance in the 00-series technical orders covering the proper annotation of the aforementioned forms, the following requirements are specific to aircraft/external fuel tank/cell maintenance and shall be followed.

2.7.6.2.1 All aircraft integral fuel tank leaks shall be documented on an AFTO Form 427 or 428.

2.7.6.2.2 Each external fuel tank and external fuel tank pylon shall have its own AFTO Form 95. As a minimum, inspections, TCTO compliance and component replacements shall be documented.

2.7.6.2.3 Each aircraft fuel cell shall have its own AFTO Form 95. As a minimum, inspections, leak tests and repairs shall be documented.

2.7.6.2.4 Fuel tank/cell AFTO Forms 427, 428 and 95 shall be maintained as historical records and reviewed prior to performing repair. These records shall accompany the aircraft or fuel tank/cell whenever it is transferred or returned to the supply system, as applicable.

2.7.6.3 Communication. Voice, visual or auditory signal communications shall be maintained by personnel within the open fuel systems repair area. Personnel shall be briefed on, and fully understand, the signals prior to each fuel tank/cell entry.

2.7.6.4 Streamers. Support equipment, caps, plugs, cover plates and test doors installed on the aircraft shall have a red "REMOVE BEFORE FLIGHT" streamer securely attached. The red streamer will be attached at the point where the equipment is connected to the aircraft. AF Form 1492 (WARNING TAG) shall not be used in lieu of red streamers. Caps, plugs, cover plates and equipment installed on the aircraft that could affect aircraft venting, fueling, defueling or transferring of fuel shall have a yellow "REMOVE BEFORE FUELING/DEFUELING" streamer securely attached. If yellow streamers are not available, attach an AF Form 1492 to the single point refueling receptacle for each cap, plug, cover plate and/or test door installed on the aircraft. An AFTO Form 781A entry shall be made documenting the location of each cap, plug, cover plate, and/or test door installed on the aircraft. Yellow streamers can be locally manufactured and shall be a minimum of two feet in length.

2.7.6.5 Signs. Fuel systems repair facilities/areas shall have warning signs clearly marked with "DANGER, OPEN FUEL TANKS, UNAUTHORIZED PERSONNEL KEEP OUT" posted during fuel systems repair. Warning signs shall be stowed or covered upon completion of repairs. Signs will conform to the standards set by Figure 8-1.

2.7.6.6 Rope, Chain, Cable or Marking Tape. Fuel systems repair facilities/areas shall be marked off 50 feet from all points on the aircraft with rope, chain, cable or marking tape. The marking of facilities applies to those areas of the structure that are normally open and is intended to control unauthorized entry into the facility/area. During combination or exhaust purge, an additional 50-foot radius, downwind from the end of exhaust duct, shall be marked off.

2.7.7 Munitions, Explosive and Pyrotechnic Device. These devices, by their very nature, are an additional source of fuel for a fire and may complicate rescue and fire-fighting operations. Egress, survival kits, destructors, fire extinguisher cartridges and engine starter cartridges may remain on the aircraft, however, they shall be made safe in accordance with weapons system technical orders, directives and TO 11A-1-33, as applicable.

2.7.7.1 The aircraft shall be non-explosives loaded in accordance with TO 11A-1-33. Munitions (30mm and smaller, including TP ammo), firearms, chaff, flares, etc., shall be downloaded when any of the following conditions are present:

NOTE

Munitions do not have to be downloaded if the task requires removal/replacement, inspection and test of externally-mounted fuel systems components.

a. An Entry Permit is required to perform fuel systems repair.

b. Hot work will be accomplished.

c. Hinders Fire Protection Services response.

2.7.8 Aircraft Operations.

2.7.8.1 Aircraft under their own power shall be allowed minor encroachment within 100 feet if the open fuel tank is within the confinements of an authorized fuel system maintenance facility with the hangar doors closed. If the open fuel tank maintenance being performed is outside of the confinements of the facility, then aircraft shall not be allowed to operate within 100 feet of the aircraft. Refer to Paragraph 2.4.5 for information concerning operation of aircraft radar and communications equipment in the vicinity of fuel systems repair facilities/areas.

2.7.8.2 Minor encroachment of the 100-foot limit is permissible when the aircraft is fully enclosed in a hangar. However, engine operation in adjacent hangars or from aircraft on nearby taxiways may create noise, jet blast or other hazards. These operations shall be curtailed when they impact the ability to safely conduct fuel systems repair. Generally, this will require coordination between MXG and OG personnel.

2.7.9 Externally-Mounted Fuel System Components. Externally-mounted components are mounted outside of a fuel tank and do not require fuel tank/cell entry, depuddling or purging to replace or repair. Repair or replacement of these components may be accomplished in any facility, parking ramp or open area approved for other types of aircraft repair. Scavenging/draining of fuel lines is permitted within any hangar as long as it does not conflict with any other directive(s). Scavenging of refuel/defuel and air refueling manifolds is acceptable.

2.7.9.1 Aircraft power shall not be applied and non-essential equipment should be removed from the immediate area.

2.7.9.2 Caps, plugs, and/or plates shall be used on fuel system components (fuel manifolds, vent manifolds, dump manifolds, valves, pumps, etc) and in fuel system openings on aircraft when they are expected to be removed or exposed for an extended period of time (i.e., longer than it would normally take to replace them). These preventative measures are taken to prevent fuel/fuel vapors from escaping and foreign objects/contamination from entering them. Barrier paper can be used, but it must conform to MIL-PRF-121, MIL-PRF-131, or MIL-PRF-22191 (Barrier Paper). If barrier paper

is to be used, it will be sealed to the fuel system components with tape approved for use on the specific component. Other barrier material (e.g., aluminum foil, plastic bags, shrink wrap, etc.) shall not be used to cover these openings. Circuit breakers,

power receptacles and single point refueling receptacles shall be tagged with an AF Form 1492 and aircraft AFTO Forms 781A documented to indicate fuel systems repair is being performed. Circuit breakers may be collared in lieu of tagged.

2.7.9.2.1 All fuel system components shall be inspected before installation to ensure all openings and passageways are unobstructed and clear of foreign debris. For fuel, vent, and dump manifolds, compressed air should be used if maintainer's line of sight does not allow viewing of the other end thus preventing a thorough inspection. It is also permissible to use a videoscope/borescope to perform this inspection.

2.7.9.3 When deemed necessary, the area shall be controlled in accordance with Paragraph 2.7.1. A red X-qualified 2A6X4, 2A3X3F (RPA Mechanic), or equivalent, will release the aircraft for concurrent maintenance once the hazards associated with the task have been eliminated, or after caps, plugs or cover plates are securely in place, as applicable.

2.7.10 Grounding/Bonding.

2.7.10.1 Grounding/bonding wires shall be constructed to fasten directly to the aircraft's grounding system. Grounding/bonding hardware (clamps, plugs and grounding/bonding reels) shall be inspected using the criteria outlined in TO 00-25-172.

2.7.10.2 Personnel shall touch a static discharge plate or ground receptacle to neutralize static charge prior to performing fuel systems repair. This will prevent static discharge from occurring near fuel vapors.

2.7.10.3 Aircraft shall be grounded when in fuel systems repair facilities/areas and remain grounded for the duration of the repair or inspection.

2.7.10.4 Powered and non-powered support equipment including fuel bowsers, fuel vacuums and metal drains shall be grounded and bonded to the aircraft when in use. Fuel bowsers shall be grounded during fuel systems maintenance, or while stored inside a fuel system repair area during maintenance. Air ducts shall be bonded to the aircraft (not applicable if the requirements of Paragraph 7.3.4 are met); the wire shall be connected to the duct nearest the fuel tank/cell access opening.

2.7.10.5 Metallic work stands shall be equipped with a static discharge plate made of copper, zinc or zinc-coated material. The plate shall be mounted or attached to the handrail at the entrance to the stand. The plate shall be marked "PERSONNEL STATIC DISCHARGE PLATE".

2.7.10.6 Metallic fuel tanks (drop, external, ferry, Benson, weapons bay) are only required to be grounded during in-tank repair/inspection. Air ducts, maintenance stands and support equipment shall be bonded to the metallic fuel tanks.

2.7.10.7 Non-metallic objects (e.g., non-metallic fuel tanks, fiberglass/aluminum work stands or ladders and rubber buckets) do not need to be grounded or bonded.

2.7.11 Temporary Panels. Barrier paper must conform to MIL-PRF-121, MIL-PRF-131, or MIL-PRF-22191 Barrier Paper. If barrier paper is to be used, it will be sealed to the aircraft surface around the tank opening with tape approved for use on the specific airframe. Aircraft with barrier paper installed over a tank opening shall not be allowed to be removed from the Fuel Repair area. A red-x qualified 2A6X4 will verify that the tank has been depuddled and purged to levels equivalent to performing hot work and the proper application of barrier paper before releasing the aircraft for other maintenance. 2A6X4 personnel will continue to monitor the aircraft until the non-fuels related maintenance is completed. At any time, should a red-x qualified 2A6X4 deem any operation in progress as unsafe all maintenance will be halted until the condition can be corrected.

WARNING

External power shall not be applied while barrier paper is in use.

CAUTION

Do not apply external power while in temporary closed configuration. The application of external power in the temporary closed configuration is permissible only with the use of MDS specific guidance. If no guidance exists, external power shall not be applied.

2.7.11.1 The use of approved non-conductive caps, plugs, and plates may be used as temporary paneling. Temporary panels used to close the tank will be installed with a sufficient amount of fasteners to effectively seal the tank from the ambient atmosphere. A red-x qualified 2A6X4 will verify that the tank is sufficiently sealed off from the atmosphere with tank readings of 0% LEL and oxygen readings between 19.5%-23.5% prior to releasing the aircraft for other maintenance. With the following conditions met the aircraft may be released for other maintenance and considered temporarily closed.

2.8 CONFINED SPACE FUEL TANK/CELL ENTRY.

2.8.1 General.

2.8.1.1 The instructions contained within this chapter outline the procedures required for entry into "Permit-Required Confined Spaces". The basis for these requirements is derived from Federal Regulations, AFI 91-203 and AFOSH

Standards. The requirements outlined below are career field specific and more stringent, and therefore, shall take precedence over Federal Regulations, AFI 91-203 and AFOSH Standards.

a. "Confined space" as defined by "Federal Regulation 29 CFR 1910.146":

   (1) Is large enough and so configured that an employee can bodily enter and perform work; and

   (2) Has limited or restricted means of entry or exit (for example; tanks, vessels, silos, storage bins, hoppers, vaults and pits are spaces that have limited means of entry), and;

   (3) Is not designed for continuous employee occupancy.

b. Bodily enter, or Entry, is defined as the action by which a person passes through an opening into a permit-required confined space. Entry includes ensuing work activities in that space and is considered to have occurred as soon as any part of the Entrant's body breaks the plane of the opening into the space.

c. A permit-required confined space means a confined space that has one or more of the following characteristics:

   (1) Contains or has the potential to contain a hazardous atmosphere;

   (2) Contains a material that has the potential for engulfing the entrant;

   (3) Has an internal configuration such that an entrant could be trapped or asphyxiated by inwardly converging walls or by a floor that slopes downward and tapers to a smaller cross section; or;

   (4) Contains any other recognized safety or health hazard.

d. A non-permit required confined space means a confined space that does not contain, or with respect to atmospheric hazards have the potential to contain, any hazard capable of causing death or serious physical harm.

2.8.1.2 BEF, through annual surveys of the work environment and associated health hazards, and Safety are the agencies that determine assignment of confined spaces as either permit- or non-permit required.

2.8.1.3 Confined space entry can be for various reasons (e.g., inspection, repair or rescue); certain sequences of events may require entry into a confined space with hazards present beyond the scope covered in this technical order. These entries will be coordinated with the MXG/CC or equivalent, Safety, BEF and Fire Protection Services.

2.8.1.4 The procedures within this technical order are for routine, recurring, fuel tank/cell entries and not intended for use for entry into an Immediately-Dangerous-to-Life and Health (IDLH) environment.

2.8.1.5 Entry into an IDLH environment is prohibited. For the purposes of this technical order, an IDLH environment is one that contains greater than 1200 PPM VOC (greater than 20% LEL) and/or an oxygen content of less than 19.5% or greater than 23.5%. This definition is based on the known hazards associated with fuel tank/cell repair. In accordance with AFI 91-203, only personnel fully qualified/trained in entry into, and rescue from, an IDLH atmosphere are authorized entry.

2.8.1.6 Confined space training will be provided by qualified individuals using a lesson/training plan approved by the Entry Authority, Safety, BEF and Fire Protection Services.

2.8.1.7 Unless otherwise authorized, a minimum of three 2A6X4, 2A3X3F, or civilian equivalent, personnel shall be used when entering a fuel tank/cell. The Entrant shall enter the fuel tank/cell; the Attendant shall remain outside the fuel tank/cell to monitor and assist the Entrant; and the Equipment Monitor/Runner will remain in the vicinity of Attendant to monitor the facility/area/equipment for hazards. When summoned by the Attendant, the Equipment Monitor/Runner shall call for help and assist in accordance with the Emergency Response and Rescue Plan. If a non-2A6X4 and 2A3X3F are required to perform maintenance inside a permit required confined space, the Attendant and Equipment Monitor/Runner will be 2A6X4 and 2A3X3F. Also, if a non-2A6X4 and 2A3X3F are used that person must be trained in confined space procedures. Regardless of circumstances, the requirement for two 2A6X4 and 2A3X3F will not be waived.

2.8.1.8 The Entry Authority/Designated Alternate may substitute a non-2A6X4 and 2A3X3F person as an Equipment Monitor/Runner when circumstances require (i.e., work stoppage due to manning shortages, surges in workload, etc.) to sustain readiness. The acceptance of reasonable risk should be weighed by the person exercising this authority to ensure safety is not compromised. Also, if a non-2A6X4 and 2A3X3F are used that person must be trained in confined space procedures. This substitution will be used on a case by case basis.

2.8.2 Emergency Response and Rescue Plan.

2.8.2.1 The MXG/CC, or equivalent, Safety, BEF and Fire Protection Services shall coordinate on a written emergency response and rescue plan. The plan shall identify the respon-

sibilities of a rescue team and the procedures to remove individuals incapable of self-rescue from fuel tanks/cells. The plan will account for foreseeable rescue situations and, as a minimum:

a. Shall be exercised annually by the Confined Spaces Program Team (CSPT).

(1) The exercise shall be documented by the wing's Confined Space Program OPR and distributed to affected agencies. The Fuel Systems Repair Section/RPA Mech Repair Section shall maintain a copy of the report on file for two years.

(2) The CSPT may practice making removals from actual or simulated fuel tanks using dummies or available personnel.

b. Shall list the equipment and facility requirements necessary to safely remove an incapacitated entrant.

c. Shall define the roles/activities of responding emergency agencies, including rescue procedures from a fuel tank/cell from which removal by the Attendant has failed or is not possible.

d. Shall account for rescue procedures from an IDLH environment by qualified personnel.

e. Shall identify either the authorized Attendant or the Equipment Monitor/Runner, if qualified, for initial rescue attempts employing the following general procedures:

WARNING

The Attendant and the Equipment Monitor/Runner, if qualified, are the first team rescue for personnel incapable of self-extraction. Failure to perform an initial rescue attempt upon identification of an incapacitated Entrant could lead to severe injuries or death.

(1) Contact the Entrant, if possible, to determine the nature of the emergency.

(2) If possible, make initial rescue attempts from outside the fuel tank/cell.

WARNING

Failure to notify the Equipment Monitor/Runner of an incapacitated Entrant and the need to summon rescue agencies could lead to severe injuries or death.

(3) Alert the Equipment Monitor/Runner to initiate the Emergency Response and Rescue Plan.

WARNING

Failure to maintain operational emergency communication equipment at the repair area will result in less than timely notification to/response by emergency services and could lead to severe injuries or death.

(4) The Equipment Monitor/Runner shall contact emergency services by the most direct means available.

(5) The Attendant shall sample the fuel tank/cell atmosphere in accordance with Chapter 5 and ensure a minimum of a fire-safe level exists before entering the fuel tank/cell to attempt rescue.

(6) Ensure the fuel tank/cell is properly ventilated in accordance with Chapter 5, if possible.

NOTE

The Attendant shall be replaced by the Equipment Monitor/Runner, if qualified, before entering the fuel tank/cell.

(7) The Attendant may don respiratory protection, but shall not enter the fuel tank/cell to attempt rescue unless a qualified Equipment Monitor/Runner is in place.

(8) When the rescue team is in their respective positions, the Attendant enters the fuel tank/cell with an emergency respirator and replaces the victim's respirator, if required.

(9) Take appropriate rescue measures/actions.

2.8.2.2 Rescue capability shall exist for all shifts during which fuel tank/cell entry must be accomplished.

2.8.3 Master Entry Plan (MEP). (Formally known as Master Entry Permit or Entry Permit Authorization Letter.)

2.8.3.1 The MEP authorizes the Fuel Systems Section Chief/RPA Mech Section Chief, or equivalent, to act as the Entry Authority for fuel tank/cell entries. The MEP does not authorize entry into a permit-required confined space. The MEP shall be developed by the organization performing fuel tank/cell entries. The MEP:

a. Shall be issued for a maximum of one year.

b. Shall authorize, by name and position, the Entry Authority.

c. Shall designate and authorize, by name and position, Designated Alternates. There should be a sufficient quantity of Designated Alternates identified to cover all operations and shifts. Designated Alternates will be:

(1) AFSC 2A674, 2A373F, or equivalent.

(2) Knowledgeable of the hazards of confined spaces and associated procedures contained in this technical order, applicable AFOSH Standards, AFI 91-203 and MEP.

d. Shall specifically state that any entry inconsistent with the conditions of the MEP shall not be authorized by the Entry Authority or any Designated Alternate.

e. Shall list permit and non-permit required aircraft fuel systems confined spaces on each assigned weapons system.

f. Shall list approved fuel systems repair facilities/areas (primary, alternate, open and temporary) and specific conditions for use deemed necessary by MXG/CC or equivalent, Safety, BEF and Fire Protection Services.

g. Shall describe the conditions under which the Entry Authority or Designated Alternates may issue Entry Permits, including:

(1) The type weapons system the MEP and Entry Permits apply to.

(2) General description of the routine and recurring type tasks that will be performed during permitted entries and the duty sections that will be performing the work.

(3) Authorized atmospheric conditions of the fuel tank/cell (e.g., fuel tank/cell properly purged, oxygen, PPM (LEL) percentage).

(4) Type chemicals, sealants, adhesives, etc., authorized for use in the fuel tank/cell.

h. Shall be approved by the MXG/CC or equivalent, Safety, BEF and Fire Protection Services annually. Approval will be based on reviews and assessments of:

(1) Fuel tank/cell familiarization and related confined spaces training programs developed as required by MXG/CC, Safety, BEF and Fire Protection Services.

(2) Entry Permit issuing procedures.

(3) Authorized atmospheric monitoring equipment is listed and used.

(4) Authorized personal protective clothing and equipment is listed and used.

(5) Emergency Response and Rescue Plan.

(6) Findings of the last emergency response and rescue plan exercise and verification of corrective actions, if any.

2.8.3.2 Adherence to MEP While Deployed or Transient.

2.8.3.2.1 A copy of the home station MEP shall be taken on every deployment.

2.8.3.2.2 Fuel tank/cell entry shall not be made while deployed/transient to any location until emergency response and rescue procedures appropriate to the location have been identified and coordinated, if applicable.

2.8.3.2.3 Deployed/Transient to a location with fuel systems repair support capabilities (i.e., facilities, areas, trained/qualified personnel, etc.). When deployed/transient to a location with fuel systems repair support capabilities, adhere to the requirements of the host base MEP to the maximum extent possible. The senior deployed/transient fuel systems repair person/RPA Mech repair specialist shall coordinate fuel tank/cell entries with the host base Fuel Systems Section/RPA Mech Repair Section. If additional personnel are required for fuel tank/cell entry, the senior deployed/transient fuel systems repair person shall:

a. Coordinate with the host base Fuel Systems Section/RPA Mech Repair Section to acquire a qualified Attendant and Equipment Monitor/Runner, as required.

b. Brief personnel on work to be performed and provide them with aircraft fuel tank/cell familiarization training.

2.8.3.2.3.1 The host base Fuel Systems Section Chief, or designated alternate, shall brief deployed/transient personnel on local MEP requirements prior to the start of any fuel tank/cell entry.

2.8.3.2.4 Deployed/Transient to a location without fuel systems repair support capabilities (i.e., facilities, areas, trained/qualified personnel, etc.). When deployed/transient to a location without fuel systems repair support capabilities, adhere to the requirements of the home station MEP to the maximum extent possible. The senior deployed fuel systems repair person/RPA Mech repair specialist shall coordinate fuel tank/cell entries with the host base Safety, BEF and Fire Protection Services, if available. The unit shall make provisions for at least two qualified fuel systems repair personnel for fuel tank/cell entry. If two qualified personnel are not available, a maintenance recovery team may be necessary. As a minimum, an Equipment Monitor/Runner shall be selected from available on-site personnel and shall be briefed on their duties.

2.8.3.2.5 Adherence to MEP While Deployed (Integrated Units). When multiple units are deployed to the same location for a period greater than 90 days, an MEP will be developed for that location. For deployments less than 90 days, adhere to the home station MEP to the greatest extent possible.

2.8.4 Entry Permit. (Formally known as Field Permit) The AF Form 1024, Confined Space Entry Permit authorizes entry into permit-required confined spaces. It shall be a written document, can be modified and locally reproduced.

2.8.4.1 The Entry Authority or Designated Alternate shall only issue an Entry Permit for fuel tank/cell entries performed under conditions consistent with the MEP. Entry Permits may be issued for similar tasks performed under similar conditions in different fuel tanks/cells on the same aircraft. The Entry Permit will cover the duration of the task(s) to be performed unless conditions under which the Entry Permit was issued change prior to task completion. The Entry Permit will never be issued for more than one year. The Entry Authority/Designated Alternate will:

a. Only issue an Entry Permit after all controls and testing are established/accomplished. Permits shall only be issued when conditions of the MEP are met.

b. Never permit entry into a fuel tank/cell with an IDLH atmosphere.

c. Ensure fuel tank/cell entries and the work performed adhere to established safety practices, procedures in this technical order and the MEP.

d. Establish and maintain a system for controlling entry into fuel tanks/cells and the facility/area during open fuel tank/cell repair in accordance with Paragraph 2.7.1.

e. Ensure fuel tank/cell entry team (Entrant, Attendant and Equipment Monitor/Runner) are qualified in accordance with Chapter 1.

2.8.4.2 The Entry Authority or Designated Alternate will amend or reissue the Entry Permit if conditions of the original Entry Permit change prior to task completion, and the changed conditions are consistent with the MEP. Entry Permit conditions are considered changed if:

a. The originally permitted task(s) change.

b. The aircraft is moved.

c. Any condition that develops that is inconsistent with or not in adherence to this technical order or the MEP.

d. Chemicals not listed in the MEP are introduced into the fuel tank/cell.

e. Personnel not previously listed on the Entry Permit require entry into the fuel tank/cell.

2.9 AIRCRAFT AND FACILITIES PROTECTION.

2.9.1 Servicing and Operations.

2.9.1.1 JP-5, JP-8, Jet A, and Jet A-1 Serviced Aircraft. Fueling, defueling, draining, depuddling, fuel transfer or purging may be accomplished in an approved fuel systems repair facility/area.

2.9.1.2 JP-4 Serviced Aircraft. Fueling and defueling shall not be accomplished inside any facility. Draining, depuddling, fuel transfer or purging may be accomplished in an approved fuel systems repair facility/area.

2.9.2 Fire Protection.

2.9.2.1 Fuel systems repair facilities/areas shall be equipped with at least two 150-lb Halon 1211, or equivalent, (refer to TO 00-25-172) fire extinguishers. Additional extinguishers shall be available if deemed necessary by Fire Protection Services. Each extinguisher shall be inspected for serviceability as part of a daily hangar/pre-maintenance checklist. Fire extinguishers should be positioned so they are available for immediate use but do not cause a safety hazard.

2.9.2.2 Fuel vapors shall be extracted from the facility. Exhaust systems will be operated during defuel, refuel, fuel transfer and draining unless ducts are used to redirect the vapors outside.

2.9.3 Aircraft Electrical Systems.

NOTE

In accordance with AFI 91-203, AF Form 979, “Danger Tags, shall only be used where an immediate hazard (RAC 1 through 3) exists and specific precautions are required to protect personnel or property or as required by TOs, instructions or other directed requirements”. They shall not be used on aircraft.

2.9.3.1 Batteries. Aircraft batteries shall be disconnected prior to open fuel tank/cell repair in accordance with the applicable weapons system technical order and directives. For fuel systems maintenance outside of the fuel systems repair area, refer to the applicable weapons system technical order for guidance. Batteries shall not be connected or disconnected during periods of open fuel tank/cell repair. The battery cables (or batteries) and the external power receptacles shall be tagged with an AF Form 1492.

2.9.3.2 Fuel Quantity Wiring Harness Repairs. Wire harness repairs shall be made in accordance with TO 1-1A-14. To ensure integrity of the fuel quantity indicating system,

wiring inside a fuel tank shall not be spliced. Wires shall be solid from bulkhead connector to fuel probe and terminated between connections with approved hardware as determined by the applicable weapons system technical order.

2.9.3.3 Fuel Probe Testing. Fuel probe testing may be accomplished while the probe is electrically-connected to the aircraft provided there is no fuel or fuel vapor in the vicinity of the test equipment and the fuel tank/cell is drained and purged to 300 PPM (5% LEL) or less. However Boeing has done extensive studies and determined the PSD90-1C and PSD90-1M are intrinsically safe for use in and near fuel vapor environments. When using either of these testers, the fuel tank/cell needs to only be at its lowest level using transfer pumps but does not need to be drained and purged.

SAMPLE MASTER ENTRY PLAN (MEP)

Unit 4077 M*A*S*H*

Effective Date: DD/MM/YY - DD/MM/YY

This MEP authorizes the Fuel Systems Section Chief/RPA Mech Section Chief, or equivalent, to act as the Entry Authority for fuel tank/cell entries. It does not authorize entry into permit-required confined space. The MEP shall be developed by the organization performing fuel tank/cell entries and approved by MXG/CC or equivalent, Safety, BEF and Fire Department. The MEP:

a. Shall be issued for maximum of one year.

b. Shall authorize, by name and position, the Entry Authority.

c. Shall designate and authorize, by name and position, Designated Alternates. There should be a sufficient quantity of Designated Alternates identified to cover all operations and shifts. Designated Alternates will be:

(1) A2A674, 2A373F, or equivalent.

(2) Knowledgeable of the hazards of confined spaces and associated procedures contained in TO 1-1-3, applicable AFOSH Standards and this MEP.

d. Shall specifically state that any entry inconsistent with the conditions of the MEP shall not be authorized by the Entry Authority or any Designated Alternate.

e. Shall list permit and non-permit required aircraft fuel systems confined spaces on each assigned weapons system.

f. Shall list all fuel system repair facilities pre-designated and approved for use by the MXG/CC, or equivalent, with coordination from Fuel Systems Section Chief, Safety, BEF, Fire Protection Services. All open repair areas in accordance with the requierments of this technical order shall be coordinated through the Airfield Manager and documented on the Master Entry Permit as applicable.

g. Shall describe the conditions under which the Entry Authority or Designated Alternates may issue Entry Permits including:

(1) The type weapons system the MEP and Entry Permits apply to.

(2) General description of the routine and recurring type tasks that will be performed during permitted entries and the duty sections that will be performing the work.

(3) Authorized atmospheric conditions of the fuel tank/cell (e.g., fuel tank/cell properly purged, oxygen, PPM (LEL) percentage).

(4) Type chemicals, sealants, adhesives etc., authorized for use in the fuel tank/cell.

h. Shall be reviewed, approved and endorsed by the MXG/CC or equivalent, Safety, BEF and Fire Department annually. Approval will be based on reviews and assessments of:

(1) Fuel tank/cell familiarization and related confined spaces training programs developed as required by MXG/CC, Safety, BEF and the Fire Department.

(2) Entry Permit issuing procedures.

(3) Authorized atmospheric monitoring equipment is listed and used.

(4) Authorized personal protective clothing and equipment is listed and used.

TO-1-1-3-095

Figure 2-1. Sample Master Entry Plan (MEP) (Sheet 1 of 7)

(5) Emergency Response and Rescue Plan.

(6) Findings of the last emergency response and rescue plan exercise and verification of corrective actions, if any.

1. ENTRY AUTHORITY AND DESIGNATED ALTERNATES:

The individuals listed below are authorized to issue Field Permits for entry into XXX weapons system fuel tanks/cells to perform tasks listed in Paragraph 6. The Entry Authority may designate Alternate Entry Authorities as required to fulfill mission requirements. This permit applies to all fuel tank/cell entries accomplished by unit personnel. Additionally, this permit addresses maintenance performed at non-Air Force installations.

ENTRY AUTHORITY:	SQ:	DUTY TITLE:
MSgt Johnny B. Goode	99 MXS	Fuel System Section Chief
DESIGNATED ALTERNATES:		
TSgt Jane Doe	99 MXS	Assist Fuel System Section Chief
TSgt Sarah Lee	99 MXS	Fuel System Supervisor
SSgt Mark A. Leak	99 MXS	Fuel System Craftsman
SSgt Susan B. Dollar	99 MXS	Fuel System Craftsman
SSgt Duncan Hines	99 MXS	Fuel System Craftsman
SSgt Debbie Cakes	99 MXS	Fuel System Craftsman

2. ENTRY AUTHORITY/DESIGNATED ALTERNATE RESPONSIBILITIES;

a. Shall be responsible for ensuring safe fuel tank/cell entries through compliance with the applicable checklists, Safety, Health and Environmental AFOSH Standards, directives, technical orders, MEP and Entry Permit.

b. Shall issue or cancel entry permits, as necessary.

c. Shall complete, sign and ensure compliance with each Entry Permit.

d. Shall ensure there is a sufficient quantity of Entrants qualified and available.

e. Shall ensure there is a sufficient quantity of Attendants qualified and available.

f. Shall ensure there is a sufficient quantity of Equipment Monitor/Runner(s) qualified and available.

g. Shall implement severe weather shutdown plan.

h. May authorize the Attendant to monitor multiple fuel tanks/cells, provided they are capable of maintaining effective communication with the Entrants.

i. May authorize the Equipment Monitor/Runner to monitor multiple repair areas/operations provided they are capable of maintaining effective communication with the Attendants.

j. Revoke the Entry Permit when any entry conditions are not consistent with this MEP.

k. Determine acceptable conditions are met where entry is planned into a permit-required confined space.

1. Ensure the fuel tank/cell atmosphere is sampled and the results documented in accordance with TO 1-1-3. Tanks not meeting the atmospheric criteria outlined in Section 6 of this MEP will not be entered.

m. Ensure workers are properly trained and qualified as noted in Section 6 of this MEP. Ensure all workers read and understand their responsibilities in the Emergency Response and Rescue Plan. Ensure workers who are ill or are on medication, which may affect their ability to safely perform assigned tasks, are excused from the operation.

TO-1-1-3-096

Figure 2-1. Sample Master Entry Plan (MEP) (Sheet 2)

n. Brief workers on the hazards associated with the inhalation of fuel vapors and other chemicals that may be introduced into the confined space. Ensure workers reduce chemical exposure to the maximum extent possible. Personnel will remove chemical-soaked clothing, inner and outer, and thoroughly clean exposed area with soap and water.

o. Inspect the work area, tools, and equipment to identify and correct hazards using applicable technical orders.

p. Ensure the availability and use of all protective clothing and other personal protective equipment (PPE) necessary for entry.

q. Inspect serviceability of respiratory equipment prior to use.

r. Ensure the aircraft is properly configured for fuel systems maintenance in accordance with TO 1-1-3 and the applicable weapons system technical order.

s. Notify the fire department that fuel systems maintenance is in progress to include: aircraft tail number, location and anticipated duration of operation.

t. Ensure emergency communication is established with Maintenance Operation Center (MOC) via radio/telephone. Voice communication shall be maintained at all times between entrant, attendant, and equipment monitor. Telephones, hot lines, and Land Mobile Radios shall be utilized for emergency communications with fire department and MOC.

u. Sign the permit after all conditions are met. If transfer of duty is required to another qualified supervisor during the course of the entry operation, ensure the new supervisor signs or initials the entry permit when the transfer is complete. Ensure the entry permit is maintained at the work site.

v. Ensure entry personnel meet all requirements per TO 1-1-3

w. Cancel permit upon completion of maintenance. Canceled field permits shall be retained for 1 year.

3. ENTRANT RESPONSIBILITIES:

a. Shall be responsible for executing safe fuel tank/cell entries through compliance with the applicable checklists, Safety, Health and Environmental AFOSH Standards, directives, technical orders, this MEP and the Entry Permit.

b. Shall obey instructions from the Attendant.

4. ATTENDANT RESPONSIBILITIES:

a. Shall be responsible for ensuring safe execution of fuel tank/cell entries through compliance with the applicable checklists, Safety, Health and Environmental AFOSH Standards, directives, technical orders, this MEP and the Entry Permit.

b. Shall never permit entry into an IDLH atmosphere.

c. Shall limit fuel tank/cell entry to only qualified and authorized personnel.

d. Shall have overall responsibility for monitoring the fuel tank/cell for hazards.

e. Shall ensure VOC PPM (LEL) readings are taken and documented on the entry permit in accordance with Chapter 5. Shall also ensure the atmospheric monitoring equipment serial number is recorded on the entry permit.

f. Shall have overall responsibility for monitoring the Entrant through use of voice, visual and/ or auditory signals.

TO-1-1-3-097

Figure 2-1. Sample Master Entry Plan (MEP) (Sheet 3)

g. Shall order the termination of maintenance and evacuation of fuel tank/cell at the first sign of a hazard or personnel distress

h. Shall alert the Equipment Monitor/Runner to initiate the Emergency Response and Rescue Plan, if required.

i. Shall act as member of first team rescue in the event of an emergency.

j. May, when authorized, monitor multiple fuel tanks/cells provided they are capable of maintaining effective communication with the Entrants.

5. EQUIPMENT MONITOR/RUNNER RESPONSIBILITIES:

a. Shall have overall responsibility for monitoring the facility/repair area for hazards and unauthorized personnel.

b. Shall monitor essential fuel tank/cell entry support equipment within the facility/repair area to ensure safe and continuous operation.

c. Shall immediately notify the Attendant if a hazard develops or support equipment becomes inoperative.

d. Shall summon rescue team in accordance with the Emergency Response and Rescue Plan.

e. Shall act as member of first team rescue in the event of an emergency.

f. May, when authorized, monitor multiple repair areas provided they are capable of maintaining effective communication with the Attendants.

g. May perform duties of the Attendant, if qualified, during rescue but shall not enter the fuel tank/cell.

6. FUEL SYSTEMS REPAIR TASKS AND EXPECTED TANK CONDITIONS.

The following task list identifies both general and specific task conditions frequently performed/encountered by personnel assigned to the Fuel Systems Repair Section/RPA Mech Repair Section. Entry teams must have a Confined Space Entry Permit (AF Form 1024) or locally approved form issued by the Entry Authority or a Designated Alternate anytime one of the following tasks is performed. Entry Permits shall be maintained at the work site until all permit-required confined space maintenance is complete. Entry Permits shall only be issued to personnel who are fully trained and certified to perform permit-required confined space entry on the applicable weapons system in accordance with TO 1-1-3. All fuel tank/cell entries shall be conducted in accordance with TO 1-1-3 and the applicable weapons system technical orders.

a. General Tank Conditions. VOC shall be maintained at 600 PPM (10% LEL) or less; 1200 PPM (20% LEL) or less during fuel foam removal. Oxygen content shall be between 19.5 and 23.5%. Fuel tanks/cells shall be continuously ventilated when occupied. These limits shall be maintained during all fuel tank/cell entries.

b. Specific Tasks for Tank Entry on XXX weapons system:

1) Depuddling operations
2) Baffle and Inerting Material (fuel foam) removal and installation
3) Fuel systems component removal and installation
4) Fuel cell installation and removal
5) Fuel tank sealant/structural repair
6) Fuel tank/cell pre- and post-maintenance inspection

c. Personal Protective Equipment/Respirator:

1) Non-cotton outer garments shall be removed.
2) Tri-Layer Coveralls or white cotton coveralls.

TO-1-1-3-098

Figure 2-1. Sample Master Entry Plan (MEP) (Sheet 4)

TO-1-1-3-099.tif

Figure 2-1. Sample Master Entry Plan (MEP) (Sheet 5)

SECTION 9. DEPLOYMENT AND READINESS PROCEDURES.

The intent of this section is to ensure tank/cell entries at off-station installations are consistent with USAF Safety and Health requirements. Tasks performed at deployed locations should be pre-planned to the fullest extent possible.

a. When deployed to another Air Force installation, all fuel tank/cell entries will comply with the MEP of the deployed location. When deployed to non-USAF military installations, adhere to the requirements of this MEP to the fullest extent possible. When deployed to BARE base or remote location, the unit will make provisions for at least two qualified fuel systems repair specialists/RPA Mech repair specialists (2A6X4, 2A3X3F (RPA Mechanic)) for all tank/cell entries. The Runner/Equipment Monitor wil be selected from available on-site personnel and will be briefed on their duties and responsibilities to include emergency response procedures. Tank/cell entry will not be attempted until coordination is made with local emergency medical and fire department response teams. The team will deploy with one combustible gas/oxygen indicator, airline respirators and sufficient support equipment to ensure safe fuel tank/cell entry.

SECTION 10. EMERGENCY RESPONSE AND RESCUE PLAN

a. Maintained in (EXACT LOCATION).

b. Last Review/Update: Date of Issue

SECTION 11. AMENDMENT PROCEDURES.

Field Permits for tank/cell entries not consistent with this MEP will not be issued without prior approval from MXG/CC, Safety, BES, and the Fire Department. After receiving approval, routine and recurring tasks may be added to this Permit on attached sheets with reference to the appropriate Permit section.

SECTION 12. APPROVALS

NAME, RANK, USAF
Duty Position or Title

1st Ind, XX CES/CEFT

MEMORANDUM FOR XX AMDS/SGPB

Concur/Non-concur

NAME, RANK
Duty Position or Title

2d Ind, XX AMDS/SGPB

MEMORANDUM FOR (Unit) AW/SEG

Concur/Non-concur

NAME RANK
Duty Position or Title

TO-1-1-3-100

Figure 2-1. Sample Master Entry Plan (MEP) (Sheet 6)

3d Ind to XX AW/SEG, 22 Mar 04 MEP

XXAW/SEG

MEMORANDUM FOR (Unit) MXG/CC

Concur/Non-concur

NAME, RANK
Duty Position or Title

4th Ind, 1 MXG/CC

MEMORANDUM FOR (Unit) MXMCF

Approve/Disapprove

NAME, RANK
Commander, (Unit) Maintenance Group

TO-1-1-3-101

Figure 2-1. Sample Master Entry Plan (MEP) (Sheet 7)

SAMPLE EMERGENCY RESPONSE AND RESCUE PLAN

1. INTRODUCTION. This emergency response and rescue plan has been coordinated and approved by the MXG/CC or equivalent, Safety, Bioenviromnental (BEF) and Fire Department. It identifies procedures for removing individuals incapable of self-rescue from fuel tanks/cells on the XXXXX weapons system(s). Personnel performing duties of the Entrant, Attendant or Equipment Monitor/Runner shall be trained as required in TO 1-1-3 and will be knowledgeable of these procedures.

2. PERSONNEL REQUIREMENTS. All fuel systems personnel/RPA Mech repair specialists designated as part of the rescue team shall be trained and qualified in accordance with this technical order. All other emergency response agencies shall meet training requirements as determined by the CSPT.

3. EQUIPMENT REQUIREMENTS. The following equipment shall be available at the job site to ensure safe rescue of an individual trapped inside a fuel tank/cell:

a. Approved respirators

b. Atmospheric monitoring equipment

c. Communication equipment (radio/telephone)

d. Other required equipment (i.e., list weapons system-specific support equipment, maintenance stands, etc.)

4. FACILITY REQUIREMENTS. To ensure safe and unimpeded entrance and exit into/from the facility, the repair area shall be maintained in a clean and organized condition in accordance with TO 1-1-3.

5. RESCUE CRITERIA. Although the most likely rescue will be from a non-immediately dangerous-to-life-and health (IDLH) environment, fuel tanks/cells containing atmospheres considered being IDLH will not be entered using the Master Entry Plan. If possible, fuel systems personnel/RPA Mech repair specialists will attempt removal of the entrant from an IDLH environment without entering the confined space. Any rescue operation requiring entry into an IDLH atmosphere shall be conducted by qualified Fire Department personnel. Fuel systems personnel/RPA Mech Repair specialists shall assist as required.

6. RESCUE OPERATION

WARNING

The Attendant and the Equipment Monitor/Runner, if qualified, are the first team rescue for personnel incapable of self-rescue. Failure to perform an initial rescue attempt upon identification of an incapacitated Entrant could lead to severe injuries or death.

a. Contact the Entrant, if possible, to determine the nature of the emergency.

b. If possible, the Attendant shall make initial rescue attempts from outside the fuel tank/cell.

WARNING

Failure to notify the Equipment Monitor/Runner of an incapacitated Entrant and the need to summon rescue agencies could lead to severe injuries or death.

c. Alert the Equipment Monitor/Runner to initiate the Emergency Response and Rescue Plan.

TO-1-1-3-102

Figure 2-2. Sample Emergency Response and Rescue Plan (Sheet 1 of 2)

WARNING

Failure to maintain operational emergency communications equipment at the repair area will result in less than timely notification to/response by emergency services and could lead to severe injuries or death.

d. The Equipment Monitor/Runner shall contact emergency services by the most direct means available. (Typically through the Maintenance Operations Center (MOC) or 911). The Equipment Monitor/Runner shall clearly and calmly state their name, rank and organization, nature of the emergency, specific location and building number and any other pertinent information. Once complete, they shall return to the area and assist with the rescue.

e. The MOC will notify rescue personnel. (list other personnel as required)

f. The Attendant shall sample the fuel tank/cell atmosphere in accordance with TO 1-1-3 and ensure a minimum of a fire-safe level exists before entering the fuel tank/cell to attempt rescue.

g. The Equipment Monitor/Runner shall ensure the fuel tank/cell is ventilated in accordance with TO 1-1-3.

NOTE

The Attendant shall be replaced by a qualified Equipment Monitor/Runner before entering the fuel tank/cell.

h. The Attendant may don respiratory protection, but shall not enter the fuel tank/cell to attempt rescue until a qualified Equipment Monitor/Runner takes their place.

i. The Attendant becomes the Entrant and shall enter the fuel tank/cell with an emergency respirator. The incapacitated person's respirator shall be replaced, if required. Take appropriate rescue measures/actions.

j. An available person shall brief rescue personnel on the current status of the incapacitated person and potential hazards and direct them to the emergency. Additionally, they shall ensure non-essential personnel do not enter the area.

k. The Attendant will assist in the removal of the incapacitated person and ensure obstacles to a safe rescue are cleared. Additionally, they shall assist rescue personnel as required.

1. In the event the Attendant and Equipment Monitor/Runner are incapable of rescuing the incapacitated person, the Fire Department on-scene commander shall assume responsibility for removal.

7. COORDINATION. Use this section for MXG/CC or equivalent, Safety, BEF, and Fire Department coordination.

TO-1-1-3-103_CH6

Figure 2-2. Sample Emergency Response and Rescue Plan (Sheet 2)

CHAPTER 3
AIRCRAFT FUEL SYSTEMS REPAIR FACILITIES AND AREAS

3.1 GENERAL.

The use of segregated repair facilities/areas for fuel systems repair is essential for safe and efficient operations. These repair facilities provide a safe, controlled environment and optimum climatic conditions that contribute immensely towards ensuring quality fuel systems repair. The repair facilities/areas described in this chapter provide necessary protection for both the aircraft and personnel from a variety of hazards.

3.1.1 Permitted Operations. Fuel systems repair facilities are intended to support the complete range of operations normally restricted from being conducted inside other hangars and structures. The normally restricted operations that are permitted in fuel systems repair facilities include, but are not limited to: partial/complete defuel/refuel, fuel transfer, depuddling/purging of fuel tanks/cells and fuel systems components and fuel tank/cell pressurization testing.

3.1.2 Repair Facility/Area Approval. All fuel systems repair facilities shall be pre-designated and approved for use by the MXG/CC, or equivalent, with coordination from Fuel Systems Section Chief/RPA Mech Section Chief, Safety, BEF, and Fire Protection Services. All open repair areas in accordance with the requirements of this technical order shall be coordinated through the Airfield Manager and documented on the Master Entry Plan as applicable.

3.1.3 Repair Facility/Area Definitions. Open fuel tank/cell repair shall be conducted in a pre-designated and approved repair facility/area (see Chapter 2, for exceptions). All approved fuel systems repair facilities/areas shall be identified in the MEP and classified as either: a primary repair facility, an alternate repair facility or an open repair area. Temporary repair facilities, if required, shall be listed on a separate Addendum to the MEP so the certification/recertification can be routed and approved in accordance with Paragraph 3.2.5, step a. The facilities and areas are defined as follows:

a. Primary Repair Facility. A primary repair facility is one that was specifically built, or modified, for use as an aircraft fuel systems repair hangar. It is the recommended, or preferred, location to perform open fuel tank/cell repair and shall be used when in a safe condition and not occupied by aircraft maintenance actions. As a minimum, the facility must meet the requirements as addressed in Paragraph 3.2.1.

b. Alternate Repair Facility. An alternate repair facility is one that was specifically built, or modified, for use as an aircraft fuel systems repair hangar. Essentially, it is a second primary or “overflow” repair facility. If the unit has a designated alternate repair facility, it is the next recommended, or preferred, location to perform open fuel tank/cell repair; it should be used when the primary repair facility is unavailable. As a minimum, this facility shall meet the same requirements as a primary repair facility.

c. Open (Outside) Repair Area. An open repair area is typically an aircraft parking spot on or near the flight line designated for fuel systems repair. When possible, the area should be segregated from the main flight line operations to ensure maximum safety. The use of an outside repair area is highly dependent on current/forecasted weather conditions, available authorized portable equipment and complexity/duration of the maintenance task. This area shall meet the requirements set forth by the local agencies addressed in Paragraph 3.1.2.

d. Temporary Repair Facility. A temporary repair facility is one that was NOT specifically built, or modified, for use as an aircraft fuel systems repair hangar but, has been approved and certified for use in accordance with Paragraph 3.2.5. Under normal circumstances, the use of a temporary facility shall be considered as a last resort.

3.2 FUEL SYSTEMS REPAIR FACILITY AND AREA REQUIREMENTS.

3.2.1 General. Primary/alternate fuel systems repair facilities shall have fire suppression, alarm/notification systems, electrical systems and structural features that meet the fire and safety ETL/criteria for fuel systems repair facilities.

Facilities meeting the previous fire and safety requirements for fuel systems repair facilities in AFM 88-15, AFR 88-15 or any subsequent ETLs prior to ETL 02-15 are compliant if they meet the requirements of ETL 98-8, Existing Aircraft Hangars.

NOTE

- The requirements of this chapter are extracted from reference documents or provided by Safety and Civil Engineering functions and are meant to provide a general guide for facility requirements. Use of this chapter as a sole design document could cause serious injury or mission impairment.
- Use of a facility that does not meet the requirements of the applicable fire protection ETL design criteria could create the risk of a fire hazard. Permanent waivers to fire protection requirements shall be approved in accordance with ETL 02-15, Fire Protection Engineering Criteria for New Aircraft Hangers. Temporary waivers to fire protection requirements, until corrections can be made, may be approved by the MAJCOM Fire Protection Engineer, or MAJCOM Fire Protection Manager in the absence of the engineer. See AFI 32-10141, Planning and Programming Fire Safety Deficiency Correction Projects, for more information.

3.2.1.1 Primary/alternate fuel systems repair facilities may continue to be used in the event that systems required by the applicable ETLs become inoperative, provided the facility is immediately inspected and deemed safe by the agency that owns the faulty system and an authorized portable system is available for use. The facility shall not be used until it has been inspected.

3.2.1.1.1 A base coordinated action plan to repair the defective system shall be approved through the MXG/CC or equivalent, Safety, Civil Engineering and Fire Protection Services. The base coordinated action plan shall include a risk assessment code (RAC), if required, CE work order number and status, proposed completion date and interim operating procedures. The operating procedures shall specifically identify the normally permitted operations that are restricted within the facility. Every attempt should be made to repair the defective system at the earliest opportunity to prevent mission degradation.

3.2.1.1.2 The base coordinated action plan should be forwarded to the MAJCOM Aircraft Fuel Systems Functional Manager/Superintendent for informational purposes only when fuel systems maintenance operations and the mission are severely impacted.

3.2.2 New Facility. Guidance for the construction of new fuel systems repair facilities can be found in AFH 32-1084 and ETL 02-15. New fuel systems repair facilities shall, as a minimum:

a. Be separated from other areas of the building by not less than 1-hour masonry fire resistive construction if it is not a separate structure.

b. Have an operational fire suppression system suitable for aircraft hangar operations and wet pipe sprinklers in adjacent areas. It shall also have a complete automatic overhead water-only sprinkler system and a low-level high-expansion foam system for aircraft.

c. Have operational emergency eyewash/shower with privacy enclosures to permit complete disrobing in the aircraft servicing area. Emergency eyewash/showers shall provide water through a thermostatic mixing valve.

d. Have changing areas, locker space, scrub sinks and personnel showers for both male and female personnel. Scrub sinks shall be the hands-free type and shall permit the washing of hands and arms to the shoulder. Scrub sinks and showers shall provide water through a thermostatic mixing valve. To prevent fuel contamination, these areas shall be accessible from the aircraft servicing area without passing through break rooms or offices. Where two or more fuel systems repair facilities are located adjacent to one another, changing areas, locker space and personnel showers for the total personnel assigned to all facilities may be combined and located in one facility. Scrub sinks shall be provided in each facility. Scrub sinks in facilities without changing areas, locker space and showers may be located in the aircraft repair area.

e. Have forced air heating supplied by steam or hot water heating throughout the facility. Radiant tube heating systems may be used in the aircraft repair area if the flame is contained in a sealed chamber with combustion air taken from outside the repair area, and the combustion products are exhausted outside the repair area.

f. Have climatic control units to provide environmentally stable air for air purging, sealant cure and general repair. The air intake for CCUs should be located in areas free from contamination.

g. Have sufficient grounding points throughout the facility.

h. Have electrical systems that meet Class I, Division 1 (Zone 1), below the floor level; Class I, Division 2 (Zone 2), throughout separate foam/cell rooms, including those that are attached to the hangar; Class I, Division 2 (Zone 2), throughout the hangar up to 18 inches; and Class I, Division 2 (Zone 2), within five feet of the aircraft. Wall-mounted outlets shall be Class I, Division 1 or 2 (Zone 1 or 2). To ensure no unclassified tools or equipment are taken into the classified area around the aircraft, wall-mounted outlets are required to be classified, even though they are outside the classified area. Wall-mounted switches that are outside the classified area do not need to be Class I, Division 1 or 2; they do not affect tools nor equipment brought into the area.

i. Have office space, break room, support equipment/tool room and restrooms with climate control and positive pressure ventilation to prevent fumes and vapors from migrating from the aircraft repair area. Rooms shall also be provided for tele-communications, utility/mechanical and fire protection systems.

j. Have shop space including fuel foam/cell rooms to service/repair fuel systems components, as required.

3.2.2.1 BEF is responsible for evaluating industrial ventilation systems. A system is considered effective if personal exposures are within the allowable occupational exposures limits. To make this determination, BEF conducts annual industrial hygiene surveys.

3.2.2.2 Drains and drainage trenches are not required in new fuel systems repair facilities. If drainage is provided, drainage trench ventilation is not required.

3.2.3 Existing Facilities. The requirements in this section of the technical order shall be used for existing fuel systems repair facilities. For facilities not meeting these requirements, refer to Paragraph 3.2.1.1.

3.2.3.1 When major improvements to an existing fuel systems repair facility, or conversion of another facility to support fuel systems repair are planned, the facilities shall be upgraded to meet the new facility requirements outlined in Paragraph 3.2.2 and the most current ETL.

3.2.3.2 Existing fuel systems repair facilities shall, as a minimum:

NOTE

Hangars meeting or exceeding the following criteria may be converted to fuel systems repair facilities.

a. Be separated from other areas of the building by not less than 1-hour masonry fire resistive construction if it is not a separate structure.

b. Have an operational fire suppression system suitable for aircraft hangar operations, and wet pipe sprinklers in adjacent areas. The following existing fire suppression systems are acceptable in the aircraft servicing area (the entire area of the hangar bay, including any adjacent and communicating areas not suitably separated from general maintenance areas by walls of masonry construction, having not less than a one-hour fire rating with 45-minute opening protection. Such walls will extend from the floor to the underside of the roof deck):

(1) A complete automatic overhead water-only sprinkler and a low-level high expansion foam system.

(2) A complete automatic overhead water deluge.

(3) A complete total-flooding high-expansion foam system.

(4) A complete automatic overhead foam-water deluge (for fighter aircraft only).

(5) A complete automatic overhead closed-head preaction foam-water sprinkler system (for fighter aircraft only).

(6) A complete automatic overhead wet pipe foam-water sprinkler system (for fighter aircraft only).

(7) Systems described in steps (4), (5), and (6), when combined with a low-level fixed or automatic oscillating foam-water nozzle system, or a low-level high-expansion foam system, are acceptable for large frame aircraft.

c. Have emergency eyewash/showers.

NOTE

Remotely located facilities without a potable water supply shall use a portable eyewash/shower.

d. Have changing areas, locker space, scrub sinks and a personnel shower. Scrub sinks shall permit the washing of hands and arms to the shoulder. Scrub sinks and showers shall provide water through a thermostatic mixing valve. To prevent fuel contamination, these ar

eas shall be accessible from the aircraft servicing area without passing through break rooms or offices; when existing facilities do not meet this criteria units shall consult with local Bioenvironmental Engineering Flight (BEF) to establish a mitigation plan. Where two or more fuel systems repair facilities are located adjacent to one another, changing areas, locker space and personnel showers for the total personnel assigned all facilities may be combined and located in one facility. Scrub sinks shall be provided in each facility and may be located in the aircraft repair area.

e. Have forced air heating supplied by steam or hot water heating provided throughout the facility. Radiant tube heating systems may be used in the aircraft repair area if the flame is contained in a sealed chamber with combustion air taken from outside the repair area, and the combustion products are exhausted outside the repair area.

f. Have climatic control units (CCU) to provide environmentally stable air for air purging, sealant cure and general repair. The air intake for CCUs should be located in areas free from potential contamination.

g. Have sufficient grounding points throughout the facility.

h. Have office space, break room, support equipment/tool room and restrooms with climate control and positive pressure ventilation to prevent fumes and vapors from migrating from the aircraft repair area. Rooms shall also be provided for tele-communications, utility/mechanical and fire protection systems. If aircraft refueling is to be accomplished in fuel cell repair facilities, the requirements of ETL 02-15 must also be followed.

i. Have shop space to service/repair fuel systems components as required for the specific aircraft.

j. Existing installed Halon 1211 systems with wall-mounted hose reels are acceptable alternatives to the wheeled fire extinguishers.

3.2.3.3 BEF is responsible for evaluating industrial ventilation systems. A system is considered effective if personal exposures are within the allowable occupational exposures limits (OELs). To make this determination, BEF conducts annual industrial hygiene surveys. The following ventilation systems may be found in fuel systems repair facilities.

a. Area ventilation systems consist of large centrifugal exhaust fans at the exterior walls. This system draws air across the hangar floor and exhausts it outside the hangar. Where these systems are present, they must be fully operational to conduct fuel systems repair.

b. Tank exhaust ventilation systems consist of permanently installed exhaust fans designed to be connected to tank exhaust dusts that provide discharge directly outside.

c. Trench drain ventilation systems consist of small trenches in the floor normally across the doors or down the sides of the hangar with some type of exhaust fan to the outside. These trenches must be connected to a fluid drain with an oil/water separator. Exhaust fans are not required and may not substitute for the ventilation systems in step a. Trench drain ventilation systems may be removed even when the trench drain is required to remain.

3.2.3.4 Depending on when the facility was constructed, electrical systems shall meet one of the following criteria:

a. Pre-1983, Class I, Division 1 (Zone 1), throughout fuel foam/fuel cell rooms; Class I, Division 1 (Zone 1), below the floor level and throughout the hangar aircraft repair area up to four feet above the floor; and Class I, Division 2 (Zone 2), up to 18 inches above the floor in adjacent areas not suitably cut off from the hangar aircraft repair area.

b. 1983 - 1996, Class I, Division 1 (Zone 1), below the floor level; Class 1, Division 1 (Zone 1), throughout foam/cell rooms; Class I, Division 2 (Zone 2), throughout the hangar aircraft repair area, up to the height of the hangar door; and Class I, Division 2 (Zone 2), up to 18 inches above the floor in adjacent areas not sufficiently separated from the hangar aircraft repair area.

c. 1996 - Present, Class I, Division 1 (Zone 1), below the floor level; Class I, Division 1 (Zone 1), throughout foam/cell rooms; Class I, Division 2 (Zone 2), throughout the hangar aircraft repair area up to 18 inches; and Class I, Division 2 (Zone 2), within five feet of the aircraft. Wall-mounted outlets shall be Class I, Division 1 or 2 (Zone 1 or 2). To ensure no unclassified tools or equipment are taken into the classified area around the aircraft, wall-mounted outlets are required to be classified, even though they are outside the classified area. Wall-mounted switches that are outside the classified area do not need to be Class I, Division 1 or 2; they do not affect tools nor equipment brought into the area.

3.2.4 Open (Outside) Fuel Systems Repair Areas. All applicable safety precautions in this technical order shall be observed.

3.2.5 Temporary Repair Facilities. Temporary facilities shall only be used after consideration is given to the timely availability of approved primary/alternate repair facilities/

open areas. They shall not be considered strictly for ease of maintenance (e.g., to prevent towing of aircraft), but rather as a last resort during peak workloads to prevent mission degradation. As a minimum:

a. Temporary repair facilities shall be initially certified by the Entry Authority, Safety and Fire Protection Services for open fuel tank/cell repair. Facilities shall be identified on an Addendum to the MEP as temporary and may be used for 90 days from the date of certification. They shall be recertified every 90 days thereafter in accordance with step c.

b. Initial certification shall be accomplished by means of a physical inspection of the facility and installed systems, a review of the Building Custodian Log and a review of the open work/job orders in the applicable Civil Engineering database to ensure there are no discrepancies that would render the facility unsafe for open fuel tank/cell repair operations. All agencies identified in step a shall take part in the physical inspection and sign the certification. Written proof of initial certification shall be filed as an Addendum to the MEP and maintained on file for one year. Facilities shall not be used until proof of certification is on file.

c. The 90-day recertification shall be accomplished by the Entry Authority or a Designated Alternate. A physical inspection of the facility and installed systems shall be conducted, a review of the Building Custodian Log, and a review of the open work/job orders in the applicable Civil Engineering database shall be conducted to ensure the facility is still safe for open fuel tank/cell repair operations, and that the status of the facility has not changed since the last certification/recertification. Questionable facility conditions shall be documented and brought to the attention of the applicable agency and the facility shall not be used until it is deemed safe by that agency. The facility shall not be used if the certification/recertification is not current.

d. The facility condition shall be monitored between 90-day recertifications via a prior-to-use inspection conducted by fuel systems personnel in accordance with Chapter 5. Questionable conditions shall be brought to the attention of Entry Authority or Designated Alternate.

3.2.5.1 All safety precautions in this technical order shall be observed.

3.2.5.2 Fuel transfer, defuel or refuel operations shall not be accomplished in a temporary facility. Draining, to include the removal of fuel or other liquids from cells/tanks via the aircraft fuel system drains, is authorized.

3.2.5.3 Aircraft fuel tanks/cells that require repair shall be defueled prior to entry into the facility. Temporary facility doors shall remain open during fuel tank/cell purging and depuddling until an entry-safe condition is reached and maintained.

3.2.5.4 If used, exhaust purge ducts shall be directed outside the temporary facility doors and positioned to prevent fuel fumes from traveling back into the facility. An additional 50-foot radius shall be marked off from the end of the duct.

3.2.5.5 Adjoining offices in the temporary repair facility shall be isolated or evacuated to prevent unauthorized entry into the fuel systems repair area and endangerment of personnel not associated with the on-going fuel systems repair.

3.2.5.6 Only equipment approved for fuel systems repair will be used in temporary repair facilities.

3.2.5.7 As a minimum, personnel shall have access to an emergency eyewash/shower (portable or permanently mounted).

CHAPTER 4
FUEL LEAK EVALUATION, CLASSIFICATION AND TEMPORARY REPAIRS

4.1 PURPOSE.

This chapter provides information on evaluating, classifying and documenting integral fuel tank leaks. It also covers approved temporary repair methods.

4.2 GENERAL.

4.2.1 Troubleshooting. Accurate troubleshooting of fuel leaks is critical to determining the airworthiness of an aircraft. The most important steps in fuel leak troubleshooting are isolating the exact leak exit point (evaluation) and then monitoring the rate of the leak (classification). Leak classification and location will determine condition and the type of repair (temporary, permanent or none) required.

4.2.2 Chasing a Leak. Given an internal source, fuel will create a leak path to the exterior surface of the aircraft. If a temporary repair is applied, the internal leak path may continue to develop until the fuel finds the next least restrictive exit point. The only effective way to break this pattern is to locate and permanently repair the internal source.

4.2.3 Cosmetic Repairs. Applying temporary repairs to minor fuel leaks to maintain the cosmetic appearance of an aircraft is not necessary and may become labor intensive. Leaks should only be repaired when they exceed allowable limits or threaten the airworthiness of an aircraft.

4.3 POSSIBLE CAUSES OF FUEL LEAKS.

Fuel leaks are caused by a variety of reasons; they can negatively impact aircraft mission capability and lead to a considerable expenditure of resources to repair. The common causes for fuel leaks are material deficiencies or deterioration, structural cracks, corrosion, improper manufacturing and maintenance procedures. Additionally, higher flashpoint fuels (JP-5, JP-8, Jet A, and Jet A-1) are more prone to exhibit signs of leakage; the tendency to drip becomes more pronounced at lower temperatures.

4.4 FUEL CELL LEAK EVALUATION.

Unless otherwise indicated by the applicable weapons system technical order, fuel leaks from fuel cell cavities are not acceptable. Aircraft shall be grounded until the leak source is determined and permanently repaired. Fuel cells shall be repaired or replaced in accordance with Chapter 9.

4.5 LOCATING AND EVALUATING FUEL LEAK.

4.5.1 General. Taking the time necessary to precisely evaluate and locate an exact fuel leak exit point prior to defueling the aircraft for repair can save valuable resources. Each fuel leak shall be thoroughly evaluated prior to classification. Carefully inspect the area around the suspect leak to ensure its not traveling from another location.

4.5.2 Approved Methods to Locate a Leak Exit Point. The approved methods to locate fuel leak exit points are helium leak detection, leak detection powder (red talcum powder), torn paper and several variations of pressure/vacuum tests. The leak detection powder and torn paper methods have proven to be the quickest and most cost effective for detecting leak exit points. The procedures for these two methods are addressed in this chapter. The more technically involved helium leak detection, and pressure and vacuum leak detection methods are normally used to identify elusive external leak exit points and to isolate internal leak sources prior to application of a permanent repair. Those procedures are discussed further in Chapter 6.

4.5.2.1 Leak Detection Powder Method. The leak detection powder method may be used to locate a fuel leak exit point. The powder will turn from light pink to dark red when it is contacted by fuel. It should be used after a leak has been detected, but before the tank has been defueled.

4.5.2.1.1 Required Materials. Clean and static-free absorbent wiping cloths, non-waxed or grease pencil, leak detection powder and a thick bristle brush.

4.5.2.1.2 Procedures.

a. Strip exterior sealants from seams in suspected leak area.

b. Blow out the area using a maximum of 30 psi compressed air. Take special care to avoid blowing the fuel into surrounding seams as this may result in a false indication. Wipe off area, changing cloths as often as necessary, to ensure it is completely dry.

c. Immediately, and lightly, dust the area with leak detection powder. If necessary, spread the powder into seams using a bristle brush.

d. Carefully observe the powder to identify the exact leak exit point. Mark the exit point(s) with a non-waxed or grease pencil and continue with leak classification.

e. Allow 6 minutes for the fuel leak to develop. The size of the wetted area around the leak exit point will determine its classification.

f. Classify the fuel leak in accordance with Paragraph 4.6.

g. Completely wipe off the leak detection powder taking care not to remove the leak exit point mark.

4.5.2.2 Torn Paper Method. The torn paper method is similar to the leak detection powder method. It should be used after a leak has been detected, but before the tank has been defueled.

4.5.2.2.1 Required Materials. Clean and static-free absorbent wiping cloths, non-waxed or grease pencil, and a piece of writing/printer paper.

4.5.2.2.2 Procedures.

a. Strip exterior sealants from seams in suspected leak area.

b. Blow out the leak area using a maximum of 30 psi compressed air. Take special care to avoid blowing the fuel into surrounding seams as this may result in a false indication. Wipe off area, changing cloths as often as necessary, to ensure it is completely dry.

c. Tear the paper to obtain a fuzzy edge.

d. Slowly move the fuzzy edge of the paper along the suspected leak area. The paper will readily absorb the fuel and provide a visual indication of the presence of a leak.

e. Carefully observe the area to identify the exact leak exit point. Mark the exit point(s) with a non-waxed or grease pencil and continue with leak classification.

f. Allow 6 minutes for the fuel leak to develop. The size of the wetted area around the leak exit point will determine its classification.

g. Classify the fuel leak in accordance with Paragraph 4.6.

4.5.2.3 Leak Detection Helium Method.

4.5.2.3.1 Integral Fuel Tank Pressurization Leak Test With Helium. Helium is a small noble gas, which is able to easily pass through extremely small leak paths. Helium is detectable using a very sensitive device, which will allow precise leak exit point determination.

4.5.2.3.1.1 Required Materials.

HWK	Helitest Wing Kit
TPS/TPS2	Tank Pressurization System/Tank Pressurization System 2

Helium Bottle with Pressure Reducer

Set of aircraft specific tooling/plugs to be used with the TPS/TPS2

4.5.2.3.1.2 Procedures.

a. Ensure tank with leak has been defueled .

b. Pressurize tank in accordance with TPS/TPS2 TO 33D2-3-56-21.

c. Perform leak detection in accordance with HWK TO 33D2-3-56-11.

4.5.2.4 Hydrogen-Nitrogen Leak Detection Method.

4.5.2.4.1 Integral Fuel Tank Pressurization Leak Test With Hydrogen-Nitrogen Mixture. A mixture of 5% hydrogen and 95% nitrogen is able to easily pass through extremely small leak paths. The hydrogen is detectable using a very sensitive device, which will allow precise leak exit point determination.

4.5.2.4.1.1 Required Materials. There are several recently-developed devices that can be used to accomplish leak detections with the hydrogen-nitrogen gas mixture. These are the Sensistor H2000, Sensistor Extrima, Trace 101, and the Hytracker, manufactured by Aerowing. Except for the H2000, these devices are intrinsically-safe. Use of the H2000 is subject to the restrictions in Paragraph 2.7.5.6

4.5.2.4.1.2 Ensure aircraft/effected tank with leak has been defueled.

Table 4-1. Leak Classification Table - Integral Fuel Tanks

Leak Classification	6-Minute Leak Limits (By Fuel Type)			Location - Condition/Action				
	AVGAS	JP-4	JP-5, JP-8, Jet A, and Jet A-1	External	Internal Vented	Internal Non-Vented	Electrical Conduit & Externally Mounted Component	Near Sources of Heat
Class "A" Slow Seep	0 to 1/4 inch	0 to 1/4 inch	0 to 1/4 inch	1	1	1 (2 places)	4	4

Table 4-1. Leak Classification Table - Integral Fuel Tanks - Continued

Leak Classification	6-Minute Leak Limits (By Fuel Type) AVGAS	JP-4	JP-5, JP-8, Jet A, and Jet A-1	Location - Condition/Action External	Internal Vented	Internal Non-Vented	Electrical Conduit & Externally Mounted Component	Near Sources of Heat
Class "B" Seep	greater than 1/4 to 3/4 of an inch	greater than 1/4 to 3/4 of an inch	greater than 1/4 to 3/4 of an inch	1	2 (2 places max)	3	4	4
Class "C" Heavy Seep	greater than 3/4 to 2 inches without dripping	greater than 3/4 to 6 inches without dripping	greater than 3/4 to 8 inches and/or less than 4 drops per minute	2	3	3	4	4
Class "D" Running Leak	greater than 2 inches or drips/ runs from the surface	greater than 6 inches or drips/ runs from the surface	greater than 8 inches or 4 drops per minute	3	3	3	4	4

4.6 INTEGRAL FUEL TANK LEAK CLASSIFICATION.

4.6.1 General. Fuel leak classification and location are used to determine condition/repair requirements. Ensure the exact leak exit point has been located and marked in accordance with Paragraph 4.5 prior to attempting fuel leak classification. Fuel leaks shall be classified using the information in Table 4-1 and the following paragraphs.

4.6.2 Leak Classifications. Leak classifications are denoted as Class A through D. Leak limits are provided for the most common AF aviation fuels. Mixtures of JP-4 with JP-5, JP-8, Jet A, and/or Jet A-1 shall be classified using the criteria for JP-4.

NOTE

Surface irregularities may localize fuel and result in dripping even though the fuel leak is a seep or heavy seep. In these cases, carefully evaluate the speed fuel reappears and spreads, after wiping, to determine the correct leak classification. When in doubt, classify the fuel leak to the next higher leak classification.

4.6.3 Leak Locations. Leak locations are categorized as:

a. External - areas exposed to air or airflow when flying, such as upper or lower wing surfaces and exposed fuselage surfaces. Areas that are not considered external are surfaces exposed to airflow only when extended, such as flaps, slats, etc.

b. Internal Vented - areas ventilated while flying or while the aircraft is on the ground such as front and rear spars, or dry bays that are drained and ventilated to the atmosphere.

c. Internal Non-Vented - areas normally adjacent to fuel tanks or fuel lines and have no means of air circulation, even though they may be drained (e.g., weep holes).

d. Electrical Conduit - conduits that route electrical wiring through fuel tanks to components.

e. Sources of Heat - fuel leaks that migrate into engine exhaust areas, aircraft brakes, etc.

4.6.4 Conditions and Actions. The following conditions and actions are the minimum requirements. Leaks may always be repaired back to a no leak condition.

a. Condition 1 - Document the fuel leak in accordance with Paragraph 4.7 and periodically inspect for growth to a Condition 2 or 3. No repair is necessary. A permanent repair should be accomplished when the fuel tank is opened for other repairs or inspection.

b. Condition 2 - Document the fuel leak in accordance with Paragraph 4.7 and periodically inspect for growth to a Condition 3. No repair is required. A permanent repair should be accomplished when the fuel tank is opened for other repairs or inspection.

c. Condition 3 - Document the fuel leak in accordance with Paragraph 4.7 and apply a temporary repair to return it to a Condition 1 or 2. If the leak cannot be temporarily repaired, the aircraft shall be grounded until the leak is returned to a Condition 1 or 2 or is permanently repaired.

WARNING

Failure to resolve conduit fuel leaks from the aircraft prior to refuel may result in severe aircraft structural damage or personnel injury/death. A leaking electrical conduit has a corresponding faulty component due to the wiring being saturated with fuel, causing a potential fire or explosion risk. The source of the leak must be determined and repaired, and any faulty component must be replaced.

d. Condition 4 - Document the fuel leak in accordance with Paragraph 4.7. Do not repair the fuel leak by using temporary repair procedures. The aircraft shall be grounded until the fuel leak is permanently repaired.

4.6.5 Determining which Tank is Leaking. Fuel leaks that appear near the common boundary of two adjacent fuel tanks may originate in either tank. The fuel tanks may be defueled or refueled individually to determine which is leaking. Regardless of the method used, sufficient troubleshooting time should be given to both methods.

4.6.5.1 Use the following defuel procedure to identify the leaking fuel tank:

a. Ensure the exact leak exit point has been identified, marked and classified in accordance with Paragraph 4.5 and Paragraph 4.6.

b. Defuel or transfer fuel out of the outboard fuel tank.

c. Allow sufficient time for residual fuel to seep out of the suspected leak exit point. Observe area to determine if the fuel leak has slowed or stopped.

d. If the leak has slowed considerably or stopped, the outboard fuel tank is leaking. If the fuel leak continues at the same rate, defuel or transfer fuel out of the inboard fuel tank.

e. Allow sufficient time for residual fuel to seep out of the suspected leak exit point. Observe area to determine if the fuel leak has slowed or stopped.

f. If the leak has slowed considerably, or stopped, the inboard fuel tank is leaking. If the fuel leak continues at the same rate, check the surrounding area for traveling leaks from a component or manifold. If the fuel leak slows but continues chances are there is trapped fuel or residual fuel in the leak path.

4.6.5.2 Use the following refuel procedure to identify the leaking fuel tank. This method takes longer because the aircraft fuel tanks should sit dry for an extended period to ensure there is no trapped or residual fuel in the leak path.

a. Ensure the exact leak exit point has been identified, marked and classified in accordance with Paragraph 4.5 and Paragraph 4.6.

b. Refuel the inboard fuel tank and allow sufficient time for the fuel leak to develop. Consider the original fuel leak classification to determine the amount of time to wait for the leak to appear. If this process is rushed, the leak may not have enough time to develop before the outboard tank is refueled; this will give a false leak indication.

c. If no leak develops after a sufficient amount of time, refuel the outboard fuel tank. Allow sufficient time for the fuel leak to develop.

4.6.5.3 Use the following procedure to determine which tank is leaking, using the helium method.

a. Ensure the exact leak exit point has been identified, marked and classified, in accordance with Paragraph 4.5 and Paragraph 4.6.

b. Pressurize the inboard fuel tank with helium using the TPS/TPS2, in accordance with TO 33D2-3-56-21.

c. Sample the exit leak point using the HWK, in accordance with TO 33D2-3-56-11. If helium is detected, the leak is originating from the inboard tank. If no helium is detected, repeat the procedure on the outboard tank.

4.7 DOCUMENTATION.

All integral fuel tank leaks and repair actions shall be documented in accordance with Chapter 2.

4.8 INTEGRAL FUEL TANK TEMPORARY REPAIRS.

4.8.1 General. Temporary repairs are applied to a fuel leak exit point until permanent repairs can be accomplished. If temporary repairs repeatedly fail, a permanent repair should be accomplished.

4.8.1.1 The repair methods in this chapter shall not be used to mask or repair leaks caused by structural damage, corrosion or component failure.

4.8.1.2 Temporary repairs should be replaced with permanent repairs when the fuel tanks are opened for other maintenance or inspection.

4.8.2 Loose Fasteners. To ensure wing structural integrity, any leak at an interference fit fastener will be treated as a loose fastener. Loose fasteners will be permanently repaired by replacing them at the earliest possible date.

4.8.3 Temporary Repairs Accomplished at Depot. Documented temporary repairs should be permanently repaired at depot. See Chapter 7.

4.8.4 Approved Temporary Repair Methods. The approved methods of temporary repair are:

4.8.4.1 Hardman extra-fast setting epoxy with aluminum foil patch (see Paragraph 4.8.5.)

4.8.4.2 Aluminum foil patch bonded with sealant (see Paragraph 4.8.6.)

4.8.4.3 Epoxy tabs (see Paragraph 4.8.7.)

4.8.4.4 Click patch (see Paragraph 4.8.8.)

4.8.4.5 Sealant without aluminum foil patch (see Paragraph 4.8.9.)

4.8.4.6 Hardman extra-fast setting epoxy without aluminum foil patch (see Paragraph 4.8.10.)

4.8.4.7 Comp Air D-236 injector kit (see Paragraph 4.8.11.)

4.8.4.8 Oyltite Stik (see Paragraph 4.8.12.)

4.8.5 Hardman Extra-Fast Setting Epoxy with Aluminum Foil Patch.

4.8.5.1 Required Materials. An authorized cleaning solvent, clean and static-free absorbent wiping cloths, Hardman Extra-fast Setting epoxy and aluminum foil patch (0.002 inch thick).

4.8.5.2 Repair limitations/information:

a. Temperature limits -- +40 to +120 °F.

b. Curing times -- 40 minutes @ + 40 °F, 15 minutes @ +120 °F.

c. Humidity -- Humidity does not affect cure time.

d. Adhesion -- Epoxy adheres better to coating than to bare aluminum; therefore, do not remove coating.

e. Accelerated Cure -- Heat will cause the epoxy to become brittle; therefore, do not use heating devices to accelerate cure time.

f. Fuel Load -- The aircraft does not need to be defueled for this procedure.

4.8.5.3 Application.

a. Cut a patch from the foil that will extend one-quarter inch beyond the fastener.

b. Clean the surface of the patch to which adhesive will be applied and the area around fastener with solvent.

c. Mix epoxy in accordance with manufacturer's instructions. Coat cleaned side of patch with 0.015 to 0.020 inch epoxy.

d. Press patch in place over fastener head.

4.8.5.4 Removal.

a. Using a heat gun, heat patch to 200 to 250 °F. Temperatures below 200 °F will not soften epoxy. Temperatures above 250 °F will damage aircraft paint.

b. While patch is hot, use a plastic scraper, or RDS (Rapid Desealing System), in accordance with TO 33D2-3-56-41, to pry up part of the patch. Continue to apply heat and use needle-nose pliers to remove the patch.

c. Reheat area and use plastic scraper, or RDS, in accordance with TO 33D2-3-56-41, to remove the remaining epoxy.

4.8.6 Aluminum Foil Patch Bonded with Sealant.

4.8.6.1 Required Materials. An authorized cleaning solvent, clean and static-free absorbent wiping cloths, Class B sealant (non-flammable, non-combustible), aluminum foil patch (0.002-inch thick) and a heat gun.

4.8.6.2 Repair limitations/information:

a. Temperature limits -- None, when the heating device from the kit is used.

b. Curing times -- 40 minutes @ + 140 °F (temperature of the heating device in the repair kit).

c. Humidity -- Refer to tack-free times (Table 6-3) for affect of humidity on cure times.

d. Adhesion -- At low temperatures (50 °F and below), better results are obtained if the area around the fastener is preheated for a few minutes.

e. Accelerated Cure -- Not applicable.

f. Fuel Load -- For best results, the aircraft should be defueled below the fuel leak exit point.

4.8.6.3 Application.

a. Cut a patch from the foil that will extend one-quarter inch beyond the fastener.

b. Clean the surface of the patch to which adhesive will be applied and area around the fastener with solvent.

c. Coat cleaned side of the patch with a thin brush coat of sealant.

d. Press the patch in place over the fastener head.

e. Using heating device, apply heat to the patch for approximately 30 minutes.

4.8.6.4 Removal.

a. Cut sealant under edge of the patch with a plastic scraper, or RDS, in accordance with TO 33D2-3-56-41.

b. Pull the patch back and continue cutting until sealant and patch are removed.

4.8.7 Epoxy Tabs or Putty.

4.8.7.1 Required Materials. An authorized cleaning solvent, clean and static-free absorbent wiping cloths, epoxy putty or epoxy tab Type-O.

4.8.7.2 Repair limitations/information.

a. Temperature limits -- None.

b. Curing times -- Approximately 2 minutes.

c. Humidity -- No limitations.

d. Adhesion -- Lightly sanding repair area may help adhesion.

e. Accelerated Cure -- Not applicable.

f. Fuel Load -- The aircraft does not need to be defueled for this procedure.

4.8.7.3 Application.

a. Clean area around the fastener with solvent.

b. Mix epoxy according to the manufacturer's instructions.

c. Apply ample amount of epoxy over the fastener. Feather edges to approximately one-quarter inch beyond the edge of the fastener. Remove excess epoxy.

4.8.7.4 Removal.

a. Place a plastic scraper, or RDS, in accordance with TO 33D2-3-56-41, at the edge of the repair.

b. Tap scraper with a rubber mallet until the repair pops off.

4.8.8 Click Patch.

4.8.8.1 Required Materials. Click Patch kit.

4.8.8.2 Repair limitations/information. The aircraft does not need to be defueled for this procedure.

4.8.8.3 Application. See manufacturer's instructions.

4.8.8.4 Removal.

a. For sealant adhesive type patches:

(1) Cut sealant under edge of the patch with a plastic scraper.

(2) Pull the patch back and continue cutting until sealant and patch are removed.

b. For epoxy adhesive type patches:

(1) Temperatures below 200 °F will not soften epoxy. Temperatures above 250 °F will damage aircraft paint. Using a heat gun, heat the patch to 200 to 250 °F.

(2) While patch is hot, use a plastic scraper, or RDS, in accordance with TO 33D2-3-56-41, to pry up part of the patch. Continue to apply heat and use needle-nose pliers to remove the patch.

(3) Reheat area and use plastic scraper, or RDS, in accordance with TO 33D2-3-56-41, to remove the remaining epoxy.

4.8.9 Sealant without Aluminum Foil Patch.

4.8.9.1 Required Materials. An authorized cleaning solvent, clean and static-free absorbent wiping cloths, Class B sealant and a heat gun.

4.8.9.2 Repair limitations/information.

a. Temperature limits -- None, when the heating device from the kit is used.

b. Curing times -- 40 minutes @ + 140 °F. This can be accomplished by using the RCD – (Rapid Curing Device), to preheat the structure, prior to applying and curing the material, in accordance with TO 33D2-3-56-31.

c. Humidity -- Refer to tack-free times (Table 6-3) for the affect of humidity on cure times.

d. Adhesion -- At low temperatures (50 °F and below), better results are obtained if the area around the leak exit point is preheated for a few minutes. This can be accomplished by using the RCD to preheat the structure prior to applying and curing the material, in accordance with TO 33D2-3-56-31.

e. Accelerated Cure -- This can be accomplished by using the RCD to preheat the structure prior to applying and curing the material, in accordance with TO 33D2-3-56-31.

f. Fuel Load -- For best results, the aircraft should be defueled below the fuel leak exit point.

g. Other Limits -- This method should only be used on non-pressurized fuel tank surfaces.

4.8.9.3 Application.

a. Clean the surface where sealant will be applied.

b. Apply a thin coat of sealant to the fuel leak exit point.

c. Using a heating device, this can be accomplished by using the RCD to cure the material, in accordance with TO 33D2-3-56-31. Apply heat for approximately 30 minutes.

4.8.9.4 Removal. Cut the sealant off with a plastic scraper, or RDS, in accordance with TO 33D2-3-56-41.

4.8.10 Hardman Extra-Fast Setting Epoxy Without Aluminum Foil Patch.

4.8.10.1 Required Materials. An authorized cleaning solvent, clean and static-free absorbent wiping cloths, Hardman Extra-fast Setting epoxy.

4.8.10.2 Repair limitations/information:

a. Temperature limits -- +40 to +120 °F.

b. Curing times -- 40 minutes @ + 40 °F, 15 minutes @ +120 °F.

c. Humidity -- Humidity does not affect cure time.

d. Adhesion -- Epoxy adheres better to coating than to bare aluminum; therefore, do not remove the coating.

e. Accelerated Cure -- Heat will cause the epoxy to become brittle; therefore, do not use heating devices to accelerate the cure time.

f. Fuel Load -- For best results, defuel aircraft below the fuel leak exit point.

g. Other Limits -- This method should only be used on non-pressurized fuel tank surfaces.

4.8.10.3 Application.

a. Clean the area with solvent where adhesive will be applied.

b. Mix epoxy in accordance with the manufacturer's instructions.

c. Apply a thin coat of epoxy to the fuel leak exit point.

4.8.10.4 Removal.

a. Using a heat gun, heat epoxy to 200 to 250 °F. Temperatures below 200 °F will not soften epoxy. Temperatures above 250 °F will damage aircraft paint.

b. Use a plastic scraper, or RDS, in accordance with TO 33D2-3-56-41, to remove the epoxy while hot.

4.8.11 Comp Air D236 Injector Kit. The injector forces sealant into the leaks at 900 psi.

4.8.11.1 Required Materials. An authorized cleaning solvent, clean and static-free absorbent wiping clothes, Comp Air D236 Injector Kit, sealant, aluminum foil tape.

4.8.11.2 Repair limitations/information.

a. Temperature limits -- None.

b. Curing times -- 5 to 10 minutes @ 150 °F. This can be accomplished by using the RCD, in accordance with TO 33D2-3-56-31.

c. Humidity -- Humidity does not affect cure time.

d. Adhesion -- Paint must be removed from around the leaking fastener.

e. Accelerated Cure -- Not applicable.

f. Fuel Load -- The aircraft does not need to be defueled for this procedure.

g. Other Limits -- For use on leaks around flush type fasteners.

4.8.11.3 Application.

a. For leaks on lower wing surfaces:

(1) Preheat D236-14 heating iron to 150 °F maximum. Additionally, this can be accomplished by using the RCD, in accordance with TO 33D2-3-56-31. Remove paint from around fastener and clean with solvent.

(2) Position locator D236-12-2 over the head of fastener and attach with suction cups.

(3) Attach D236-11 cylinder and D236-10 jack. Use extensions as necessary.

(4) Align complete assembly perpendicular to surface.

(5) Attach compressed air source to the cylinder.

(6) Fill injector with sealant.

(7) Place injector through locator.

(8) Manually extend jack to force cylinder rod to retract into cylinder approximately three inches.

(9) Observe injector head. When all sealant has been injected the sleeve will line up with edge of body.

(10) Remove injector, wipe surface with cloth dampened with solvent.

(11) Apply aluminum foil tape, approximately one inch square, over the head of the fastener.

(12) Hold heating iron firmly against the tape for 5 to 10 minutes to cure sealant. Additionally, this can be accomplished by using the RCD, in accordance with TO 33D2-3-56-31.

(13) Peel off the tape.

b. For leaks on upper wing surfaces. Preheat D236-14 heating iron to 150 °F maximum. Additionally, this can be accomplished by using the RCD, in accordance with TO 33D2-3-56-31. Remove paint from around the fastener and clean with solvent.

(1) Place correct foot assembly over the leak.

(2) Position locator D236-12-3.

(3) Fill the foot with sealant.

(4) Install plunger in the foot assembly.

(5) Press down on the plunger to inject sealant.

(6) Remove the injector and wipe the surface with a cloth dampened with solvent.

(7) Apply aluminum foil tape, approximately one inch square, over the fastener head.

(8) Hold heating iron firmly against the tape for 5 to 10 minutes to cure sealant.

4.8.12 Oyltite Stik.

4.8.12.1 Required Materials. An authorized cleaning solvent, clean and static-free absorbent wiping cloths, Oyltite Stik.

4.8.12.2 Repair limitations/information.

a. Temperature limits -- None.

b. Curing times -- Immediate.

c. Humidity -- Humidity does not affect cure time.

d. Adhesion -- Not applicable.

e. Accelerated Cure -- Not applicable.

f. Fuel Load -- The aircraft does not need to be defueled for this procedure.

g. Additional Limitations -- None.

4.8.12.3 Application.

a. Clean the application area with solvent.

b. Soften Oyltite Stik by dipping open end in solvent.

c. Firmly apply Oyltite Stik to the fastener head. Repeat as necessary.

d. Remove excess material.

4.8.12.4 Removal.

a. Place a plastic scraper, or RDS, in accordance with TO 33D2-3-56-41, at the edge of the repair.

b. Tap scraper with a rubber mallet until the repair pops off.

CHAPTER 5
PREPARATION FOR MAINTENANCE

5.1 PURPOSE.

This chapter provides general guidance and procedures for preparing aircraft for open fuel tank/cell maintenance. It provides general checklists fuel systems repair facilities/areas and for fuel tank/cell entries. It also provides descriptions and procedures for fuel tank/cell purging, ventilating, depuddling and the equipment/materials required to accomplish these tasks. It addresses fuel foam removal, inspection, storage, replacement and reinstallation. It also addresses the purging of fuel system components removed from the a/c for replacement and/or storage.

5.2 GENERAL.

WARNING

To prevent fire, explosions or health hazards, strict compliance with applicable precautions and requirements in Chapter 2 shall be followed.

The following precautions and procedures shall be followed prior to opening any fuel tank/cell for purging, depuddling or removing fuel foam.

WARNING

Concurrent maintenance shall not be performed during the following: refueling, fuel transfer, defueling, purging, depuddling, fuel tank pressurization or any other operation deemed unsafe by a red X-qualified 2A6X4, 2A3X3F (RPA Mechanic), or equivalent. Failure to comply could result in injury or death to personnel and damage to, or destruction of, the aircraft.

a. Refueling, defueling, fuel transfer, draining, fuel tank/cell repair and/or inspection, purging and depuddling may only be accomplished in authorized facilities/areas as identified in Chapter 3.

b. General checklists for fuel systems repair facilities/areas and fuel tank/cell entries shall be accomplished in accordance with Paragraph 5.4 prior to opening a fuel tank/cell.

c. All personnel shall have the applicable training and qualifications addressed in Chapter 1.

d. Aircraft shall be made safe for maintenance in accordance with this technical order and the applicable weapons system technical order prior to opening a fuel tank/cell.

5.3 CHECKING VOC PPM (LEL) LEVEL.

Table 5-1. Allowable VOC PPM and LEL Levels

	PID Meter	Equivalent LELs
Fire Safe (for foam removal	1200 PPM	20% LEL
Entry Safe	600 PPM	10% LEL
Use of non-intrinsically safe equipment	300 PPM	5% LEL
Hot Work	90 PPM	1.5% LEL

5.3.1 Using Atmospheric Testing Equipment.

a. AFI 91-203, Table 23.1 specifies atmospheric conditions to test for in confined spaces: flammability, oxygen, toxicity, and other conditions. The first two conditions apply to aircraft fuel system repair procedures. Record the oxygen and LEL readings on the AF Form 1024 or equivalent. PPM will be converted to LEL in accordance with AFI 91-203, paragraph 23.4.

b. Deleted.

5.3.2 Deleted.

5.4 CHECKLISTS.

5.4.1 General Checklist for Fuel Systems Repair Facilities/Areas. This checklist covers general procedures associated with positioning of aircraft within a fuel systems repair facility/area for fuel tank/cell repair. It should be modified to meet local needs. At the discretion of the Fuel System Section Chief, this and the checklist referenced in Paragraph 5.4.2 can be combined, in some cases.

a. If using a temporary repair facility, ensure certification is current.

b. Ensure purging/ventilating equipment (portable or permanently installed) is operational.

c. Ensure hangar/trench exhaust system is on, if applicable.

d. Ensure fire extinguishers are available and serviceable.

e. Ensure fire alarm system (if installed) is enabled.

f. Ensure emergency communication equipment is available and operational. (i.e., telephone or radio).

g. Ensure emergency eyewashes/showers (portable or permanently installed) are available and operational.

h. Ensure warning signs are available.

i. Ensure toolboxes brought into the repair area are handled in accordance with Chapter 2.

j. Ensure aircraft is properly parked, chocked and grounded.

5.4.2 General Checklist for Fuel Tank/Cell Entries. This checklist covers general procedures associated with preparations for open fuel tank/cell repair. At the discretion of the Fuel System Section Chief/RPA Mech Section Chief, this and the checklist referenced in Paragraph 5.4.1 can be combined, in some cases.

a. Review forms (e.g., AFTO Forms 781A, 781K, 95, and 427/428, if applicable) and brief personnel.

b. Ensure aircraft is safe for maintenance in accordance with the applicable weapons system technical order.

c. Ensure munitions are removed, downloaded or made safe in accordance with the applicable weapons system technical orders and directives.

d. Ensure aircraft batteries are disconnected and the cables are tagged with an AF Form 1492.

e. Ensure aircraft external power receptacle, SPR (when test equipment is installed), and fuel control panel are tagged with AF Forms 1492.

f. Ensure non-approved equipment is removed from the repair area.

g. Ensure repair area is roped off in accordance with Chapter 2 and warning signs are posted.

h. Ensure a single point of entry is established and only authorized personnel enter the open fuel systems repair area.

i. Ensure support equipment is serviceable, properly positioned and bonded/grounded, if required.

j. Ensure atmospheric monitoring equipment is ready for use.

k. Ensure test/support equipment that attaches to the aircraft has “Remove Before Flight” and/or “Remove Before Fueling/Defueling” streamers.

l. Ensure PPE is available and serviceable.

m. Ensure Fire Protection Services is notified prior to opening fuel tanks/cells.

n. Ensure personnel remove jewelry and spark/flame producing objects prior to entering the open fuel systems repair area.

o. Ensure only authorized tools/equipment are used.

p. Ensure hand tools carried into the fuel tank/cell are in a non-metallic container.

q. Ensure qualified personnel are in position.

r. Ensure voice, visual or auditory communication is established between workers.

s. Ensure personnel are aware of the Emergency Response and Rescue Plan procedures.

t. Ensure an Entry Permit is generated and issued in accordance with Chapter 2.

u. Check that egress system and oxygen system spark/flame producing items are removed or made safe in accordance with applicable weapon system technical order. Ensure that LOX converters with quick disconnects are removed and LOX converters without quick disconnects are made safe in accordance with applicable weapon system technical order, prior to opening any fuel tank/cell. For weapon systems that do not have technical order provisions for LOX converters to be made safe, the requirement to make a LOX converter safe will be as follows: Close all applicable LOX manual shut off valves and attach warning tags. Close all applicable gaseous oxygen (GOX) manual shut off valves and attach warning tags. Ensure all oxygen regulators are off.

5.5 PURGING AND VENTILATING.

5.5.1 Support Equipment. The equipment listed below is typically used for purging, ventilating, curing sealants/coatings or supplying conditioned air to personnel during open fuel systems repair. This equipment shall be bonded and grounded in accordance with TO 00-25-172.

5.5.1.1 Air Conditioners. Air conditioners are not explosion-proof and shall remain outside the open fuel systems repair area. Trailer-mounted ground support electric-, gasoline- or diesel-powered air conditioners may be used when conditioned, temperature-controlled air is required. The A/M32C10 air conditioner (all models) may be used if heated, conditioned-air is required; the output temperature shall not exceed 150 °F.

5.5.1.2 MA-1 Blower. The MA-1 blower is explosion-proof and may be operated inside an open fuel systems repair area.

5.5.1.2.1 The MA-1 blower shall be equipped with a filter to prevent it from picking up debris and blowing it into the fuel cell/tank. The filter shall be inspected, cleaned and replaced as required. The filter is locally manufactured.

5.5.1.3 Heaters. The following heaters are approved for use during open fuel systems repair:

5.5.1.3.1 H-1 Heater or New Generation Heater (NGH). H-1 heaters and New Generation Heaters (NGH) (NSN 4501-01-482-8571) are not explosion proof and shall remain outside the open fuel systems repair area. Their combustion chambers are sealed from the ventilating chambers. They may be connected through an air eductor plenum chamber (NSN 4730-01-593 -5389) and ventilating fan (NSN 4140-01-096-1596) to the open fuel cell/tank using the ducts supplied with the unit.

5.5.1.3.2 RCD. The RCD emitter is an explosion-proof sealant curing device and may be operated inside the open fuel systems repair area. The RCD control box is not approved for hazardous areas. Procedures for operating the RCD control box in the open fuel systems repair area must meet para 2.7.5.6. The RCD emitter may be placed directly inside the fuel cell/tank opening, in accordance with TO 33D2-3-56-31. The RCD will be used for sealant curing purposes only, and not for general fuel tank heating.

5.5.1.3.3 HDU/13. The HDU/13 is an explosion-proof heater and may be operated inside the open fuel systems repair area. The air duct may be placed directly inside the fuel cell/tank opening. Temperature may be controlled manually from 40 to 200 °F.

5.5.1.3.4 Plenum Chamber. Plenum chambers are optional. They are locally-manufactured or purchased commercially and are used to reduce the temperature of the air output from the heater by mixing it with ambient air. Plenum chambers do not need separate bonding because they are mounted to the heater assemblies.

5.5.1.4 Air Ducts. Air ducts shall be inspected prior to use to ensure the reinforcement coil is bonded to the outlet ring. If it is not, the duct shall be repaired/modified prior to use. Ducts shall be free of tears.

5.5.1.5 Portable Electric- or Pneumatic-Powered Ambient Air Breathing Pumps. This equipment may be used to supply filtered breathing air to full-face respirators. Pumps shall be capable of adequately supplying three attached respirators simultaneously. Electric pumps shall be explosion proof.

5.5.1.6 Portable Electric- or Pneumatic-Powered Fans and Blowers. This equipment may be used for purging or ventilating. Electric fans shall be explosion proof.

5.5.1.7 Air Mover. The air mover (See Figure 8-5) is typically placed in a filler cap or other small opening to aid in extraction of fuel vapors. It operates under the venturi principle. Air is supplied to the air mover by connecting a hose from an air source.

5.5.1.8 Shot Bag. A locally manufactured bag filled with shot that may be used to anchor items such as air mover, air hose, etc. It is not practical to ground or bond shot bags.

5.5.1.9 Fuel Cell/Tank Servicing Cart. This cart may be used as a central storage location/transport trailer for open fuel cell/tank support equipment.

5.5.1.10 Fuel Foam Storage Cart. This cart may be used to temporarily store fuel foam during fuel systems repair. It may also be used to transport fuel foam to/from the repair site. Fuel foam storage carts only require bonding when a purging duct with air flow is attached.

5.5.1.11 Ventilation Duct Air Movers. These are optional pneumatically (shop air) driven and are designed to ventilate confined spaces, aircraft fuel Cells and shipboard compartments. They will rapidly exhaust fumes or vapors from a confined space or supply continuous fresh air to support personnel entry. NSNs are 4140-01-105-6326 and 4140-01-096-1596.

5.5.2 General.

5.5.2.1 Given the high concentration of VOC PPM (LEL) after a fuel tank/cell is initially opened, purging is one of the most dangerous tasks associated with fuel systems repair. Personnel shall ensure strict compliance with applicable safety precautions.

5.5.2.2 Purging is used to reduce the extremely hazardous levels of VOC PPM (LEL) within a fuel tank/cell to facilitate safe personnel entry for fuel systems repair or inspection.

5.5.2.3 Ventilating is used to maintain a supply of fresh air to a fuel tank/cell after it has been purged to an entry-safe VOC PPM (LEL) level. If the VOC PPM (LEL) level rises above the entry-safe level, the fuel tank/cell shall be repurged.

5.5.2.4 Fuel tanks/cells shall be purged to attain, and ventilated to maintain, the VOC PPM (LEL) level appropriate for the required task as identified in Table 5-1.

5.5.2.5 The two approved purging methods are air purge and fluid purge. Fluid purging is normally performed by Depot and Contract Field Teams and is discussed further in Chapter 7.

5.5.2.6 The three approved air purge methods are blow, exhaust and combination. Blow purge is the process of blowing fresh air into a fuel tank/cell. Exhaust purge is the process of extracting fuel vapors from a fuel tank/cell. The preferred air purge method is the simultaneous use of the exhaust and blow purge methods, commonly referred to as the combination purge. Air purge may be accomplished using a hangar CCU and/or authorized portable equipment (i.e., HDU-13M or portable fan).

5.5.3 Combination Purge.

NOTE

The procedures for blow and exhaust purging are the same as the combination purge except the exhaust duct is removed to blow purge or the blow duct is removed to exhaust purge.

5.5.3.1 Required Equipment. Air mover and air source (optional), air ducts, purge equipment, approved fuel collection container and atmospheric monitoring equipment.

5.5.3.2 Procedures.

a. Ensure compliance with precautions and procedures in Paragraph 5.2.

b. Ensure aircraft or applicable fuel tank(s) is/are defueled in accordance with the weapons system technical order.

c. Ensure applicable fuel tank(s)/cell(s) is/are drained in accordance with the weapons system technical order.

d. Position the purge equipment so it does not create a safety hazard. Bond the equipment in accordance with Chapter 2.

e. Connect blow and/or exhaust purge duct(s) to the purging equipment and extend duct(s) towards the applicable fuel tank/cell access door(s). A locally manufactured tool (Figure 5-2) may be used to attach exhaust purge duct to filler cap openings or fuel quantity probe openings.

f. Start the air mover and purge equipment prior to opening the fuel tank/cell access door(s).

WARNING

To prevent the possibility of a fire or explosion, the purge equipment must be turned on prior to connecting the air ducts to the aircraft. If power fails, immediately remove the air duct from the aircraft and move the duct and purge equipment, if applicable, to a vapor-free area. Failure to comply with this procedure could result in injury or death to personnel and damage to, or destruction of, the aircraft.

g. Carefully remove applicable fuel tank/cell access door(s) in accordance with the weapons system technical order. If applicable, ensure an additional access door is opened to allow a continuous flow of air through the fuel tank/cell.

h. If applicable, open the fuel tank filler cap and position the air mover in the opening. Bond the air mover in accordance with Chapter 2 and secure it to the wing surface using shot bags to stabilize it.

i. Position purge duct(s) in the fuel tank/cell access opening(s).

j. Purge fuel tank/cell for 30 minutes. If required, move the duct(s) to a different position after 15 minutes to complete the purge.

k. Remove purge duct(s) from the fuel tank/cell access opening(s).

CAUTION

To prevent damage to the atmospheric monitoring equipment, keep the equipment away from fuel puddles or wetting hazards such as manifold outlets, pump inlets, etc.

l. Check oxygen level in the fuel tank/cell to ensure it's between 19.5 and 23.5%. If the oxygen level is outside of this range, continue purging for 15 minutes. Recheck oxygen level. Continue process until a safe oxygen level exists.

m. Skip to step q for entry into a fuel tank/cell containing fuel foam.

n. Check VOC PPM (LEL). If the fuel tank/cell VOC level is above 600 PPM (10% LEL), continue purging for 15 minutes. Recheck PPM (LEL) level. Continue process until an entry-safe condition exists.

o. Depuddle the fuel tank/cell, as necessary, in accordance with Paragraph 5.7.

p. Continuously ventilate fuel tank/cell to maintain an entry-safe condition. Monitor VOC PPM (LEL) in accordance with Paragraph 5.3.

q. Check VOC PPM (LEL). If the fuel tank/cell VOC level is above 1200 PPM (20% LEL), continue purging for 15 minutes. Recheck PPM (LEL) level. Continue process until a fire-safe condition exists.

r. Remove fuel foam from the fuel tank/cell in accordance with Paragraph 5.6.2, and store in accordance with Paragraph 5.6.4. Unless the fuel foam is being completely replaced, remove only enough foam to accomplish the repair/inspection and to prevent the Entrant's PPE from becoming saturated. Continue purging and monitor VOC PPM (LEL) in accordance with Paragraph 5.3.

s. Depuddle the fuel tank/cell, as necessary, in accordance with Paragraph 5.7.

t. Check VOC PPM (LEL). If the fuel tank/cell VOC level is above 600 PPM (10% LEL), continue purging for 15 minutes. Recheck PPM (LEL) level. Continue process until an entry-safe condition exists. If VOC PPM (LEL) level cannot be maintained below 600 PPM (10% LEL), remove additional fuel foam.

u. Continuously ventilate fuel tank/cell to maintain entry-safe condition. Monitor VOC PPM (LEL) in accordance with Paragraph 5.3.

5.6 BAFFLE AND INERTING MATERIAL (COMMONLY REFERRED TO AS FUEL FOAM).

5.6.1 General. The Air Force uses baffle and inerting material, specifications MIL-DTL-83054C and MIL-PRF-87260A. This material suppresses explosive reactions, controls ignition rate of burning fuel vapors and acts as a baffle to limit fuel sloshing. Fuel tank/cells containing baffle and inerting material should not explode when struck by lightning, pierced by ground fire or when subjected to electrical arcs from failed components.

5.6.1.1 MIL-DTL-83054C Baffle and Inerting Material. Material meeting this specification is generally referred to by type or color and includes: Type I (orange), Type II (yellow), Type III (red), Type IV (dark blue), and Type V (light blue). This material is not electrically conductive and can develop an electrical potential during fuel servicing operations or flight. These static charges can discharge and cause singeing or burning of the material.

5.6.1.1.1 Types I, II, and III are susceptible to deterioration from exposure to high temperature and humidity and have a service life from two to seven years.

5.6.1.1.2 Types IV and V have better resistance to temperature and humidity and have a longer service life. They also have a higher volume swell, lower tensile strength and tear resistance; therefore, it is important that these types be carefully sized and installed with adequate clearances.

5.6.1.1.3 Type I, II and IV are a coarse-pore material; Types III and V are fine-pore.

5.6.1.2 MIL-PRF-87260A Baffle and Inerting Material. Material meeting this specification may be any color except orange, yellow, red or blue. Generally, it is gray or black. It is electrically conductive and will not hold a static electricity charge. This material has some tolerance to humidity.

5.6.1.2.1 MIL-PRF-87260A is separated into two classes, each containing two grades: Class 1, Grade I and II and Class 2, Grade I and II.

5.6.1.2.1.1 Class 1 material has a temperature range of ±0 to +160 °F. Grade I is a coarse-pore material; Grade 2 is a fine-pore material.

5.6.1.2.1.2 Class 2 material has a temperature range of -25 to +160 °F. Grade I is a coarse-pore material; Grade 2 is a fine-pore material.

5.6.1.3 Fine- and coarse-pore materials are not interchangeable.

5.6.2 Fuel Foam Removal.

WARNING

Fuel foam will be removed in a manner that allows free movement of entrants into applicable fuel tank(s)/cell(s) and/or the room for emergency personnel to enter and render aid to incapacitated entrants. Fuel tank(s)/cell(s) entrants shall not "tunnel" through foam.

a. Ensure compliance with precautions and procedures in Paragraph 5.2.

b. Ensure aircraft or applicable fuel tank(s) is/are defueled in accordance with the weapons system technical order.

c. Ensure applicable fuel tank(s)/cell(s) is/are drained in accordance with the weapons system technical order.

d. Ensure applicable fuel tank(s)/cell(s) is/are purged and meets acceptable VOC PPM (LEL) levels in accordance with Paragraph 5.3.

NOTE

Wet foam tears easily. Exercise care when removing foam, especially pieces that wrap around components and conduits.

e. To minimize static electricity buildup and damage to aircraft components, slowly and carefully remove the fuel foam.

5.6.3 Fuel Foam Inspection Criteria. Fuel foam shall be inspected for serviceability after removal and before storage. Inspect foam for:

a. Legibility of Markings. If the alphanumeric identifiers on the foam pieces are not legible, remark them using a fuel resistant marker in accordance with the weapons system technical order.

b. Contamination. Examine the fuel foam for foreign particles such as lint or fibers. Foam in low areas of the fuel tank/cell will have a tendency to collect higher concentrations of debris. Remove the contamination either by hand or an approved vacuum cleaner. Replace excessively contaminated foam that cannot be cleaned.

c. Burning or Singeing. Examine the fuel foam for burning or singeing. Evidence of burned or singed fuel foam will normally appear near the fuel tank/cell vents. Typical indications are: surface color changes, formation of a rough bead-like surface, excessive gorging in foam pattern or sticky areas. Replace damaged fuel foam.

NOTE

Wet foam tears easily. Do not pull on it with excessive force when checking for deterioration.

d. Deterioration. The most likely area to find deterioration is near the fuel tank/cell vents. An excessive quantity of fuel foam particles in the engine fuel or water filters may be a sign of advanced deterioration.

e. Tears or Punctures. Examine fuel foam for tears or punctures. Check foam by gently pulling on loose particles or strands. Replace, if required.

5.6.4 Fuel Foam Storage.

5.6.4.1 Indoor Storage. Fuel foam stored indoors shall be placed in either clean electro-static-free plastic bags, canvas bags or placed on a clean electro-static-free plastic or canvas cloth. If the fuel foam is to be reused, it shall also be covered with either clean electro-static-free plastic, or canvas. The bags may be placed in a segregated storage area or retained near the aircraft. Segregated storage areas shall be approved by Safety and Fire Protection Services. Fuel foam shall not be stored in direct sunlight or exposed to high temperatures/high humidity.

5.6.4.2 Outdoor Storage. Short-term outdoor storage of fuel foam is authorized for aircraft in fuel systems repair areas not co-located with an approved fuel systems repair facility or segregated fuel foam storage area. Fuel foam shall be protected from exposure to contamination, direct sunlight and water. It may be stored around or under the aircraft. Fuel foam shall be placed in either clean electro-static-free plastic bags, canvas bags or placed on a clean electro-static-free plastic or canvas cloth. It shall also be covered with either clean electro-static-free plastic, or canvas.

5.6.4.3 Fuel foam shall be disposed of in accordance with applicable local and federal environmental regulations.

5.6.5 Fuel Foam Replacement. Fuel foam may be ordered from the supply system in bulk or pre-cut kits. Foam can be cut with a sharp electric knife, Ontario knife or a band saw with a self-cleaning blade. The electric or Ontario knife is best for cutting small quantities or individual replacement pieces of fuel foam. The electric knife shall be equipped with a tungsten carbide cutting edge. Replacement fuel foam must be cut identical in form. Mark replacement foam piece(s) in accordance with the applicable weapons system technical order.

5.6.6 Fuel Foam Reinstallation. Voids are cut into foam to enable a sufficient clearance around fuel systems components (e.g., vents, pumps, probes, interconnects, etc.) to enable safe and unobstructed operation. Personnel shall ensure that proper clearances are maintained around components during reinstallation. After reinstallation, all components inside that fuel tank/cell shall be operationally tested in accordance with the applicable weapons system technical order.

5.6.6.1 If 25% or more of the aircraft or fuel tank/cell foam has been removed and reinstalled or replaced, refer to the applicable weapons system technical order for fuel system flush and fuel sample requirements.

5.6.6.2 To maintain contaminates at an acceptable level, emphasis should be placed on periodically draining fuel tank/cell sumps, checking engine fuel and water filters.

5.7 DEPUDDLING.

5.7.1 Support Equipment. The equipment listed below is typically used for depuddling fuel cells/tanks.

5.7.1.1 Vacuum Cleaner. Vacuum cleaner is an air-operated and explosion-proof device used to remove fuel from a fuel cell/tank. It shall be bonded and grounded in accordance with Chapter 2.

5.7.1.2 Rubber Bucket. Rubber buckets shall be used to drain or collect small amounts of fuel from aircraft/components.

5.7.2 General. Depuddling is the removal of residual fuel or purging fluid that remains after the fuel tank/cell has been drained. Depuddling will be accomplished by using an absorbent cloth, sponge, mop or an approved air-operated vacuum. Fuel shall only be collected in approved safety containers in accordance with Chapter 2. As a minimum, fuel puddles in the path of the purging/ventilating air flow, vicinity of the Entrant and fuel tank/cell repair area(s) shall be removed. Every effort should be made to remove as much puddled fuel as reasonably possible to help maintain an entry-safe VOC PPM (LEL) level.

5.7.2.1 Required Equipment and Materials. Absorbent cloth, sponge, mop, or air-operated vacuum and an approved fuel collection container.

5.7.2.2 Procedures.

a. Ensure compliance with precautions and procedures in Paragraph 5.2.

b. Ensure aircraft or applicable fuel tank(s) is/are defueled in accordance with the weapons system technical order.

c. Ensure applicable fuel tank(s)/cell(s) is/are drained in accordance with the weapons system technical order.

d. Ensure applicable fuel tank(s)/cell(s) is/are purged in accordance with Paragraph 5.5.

e. If applicable, remove fuel foam in accordance with Paragraph 5.6.2.

f. Remove fuel puddles using absorbent cloth, sponge, mop or air-operated vacuum.

5.8 COMPONENT PURGING.

5.8.1 Support Equipment. The equipment listed below is typically used for removing fuel from a component.

5.8.1.1 Air Chuck. The air chuck is used to force any residual fuel from a component. Eye/face protection shall be worn when operating it.

5.8.1.2 Rubber Bucket. Rubber bucket shall be used to collect small amounts of fuel from the component/s. Other approved collection devices my be used.

5.8.2 General. Component purging is required prior to storing an item for reinstallation or turn-in to supply (i.e. storage racks, bins, or storage/shipping containers). Every effort should be made to remove all residual fuel from a given component to minimize the explosive/ignition hazards associated with fuel and maintain an intrinsically safe VOC PPM (LEL) level. All purging operation will take place in a well ventilated area.

5.8.2.1 Required Equipment, Materials and PPE. Absorbent material, an approved fuel collection container, air chuck, air source, air hose, gloves, eye protection and or face shield, gloves, and a purging area.

5.8.2.2 Procedures.

a. After removal of the component/s and with all caps and plugs removed from electrical connectors and open ports, drain the remaining fuel into an approved fuel collection container.

b. While wearing PPE and using an approved fuel collection container, use air chuck and 30 psi max to blow any residual fuel from the component.

c. Attach all appropriate tags and place the item in a purging area while using blow and/or combination purge.

d. Once it is confirmed the component is free of fuel, install all caps and plugs and place in the necessary container/bin for storage/shipment.

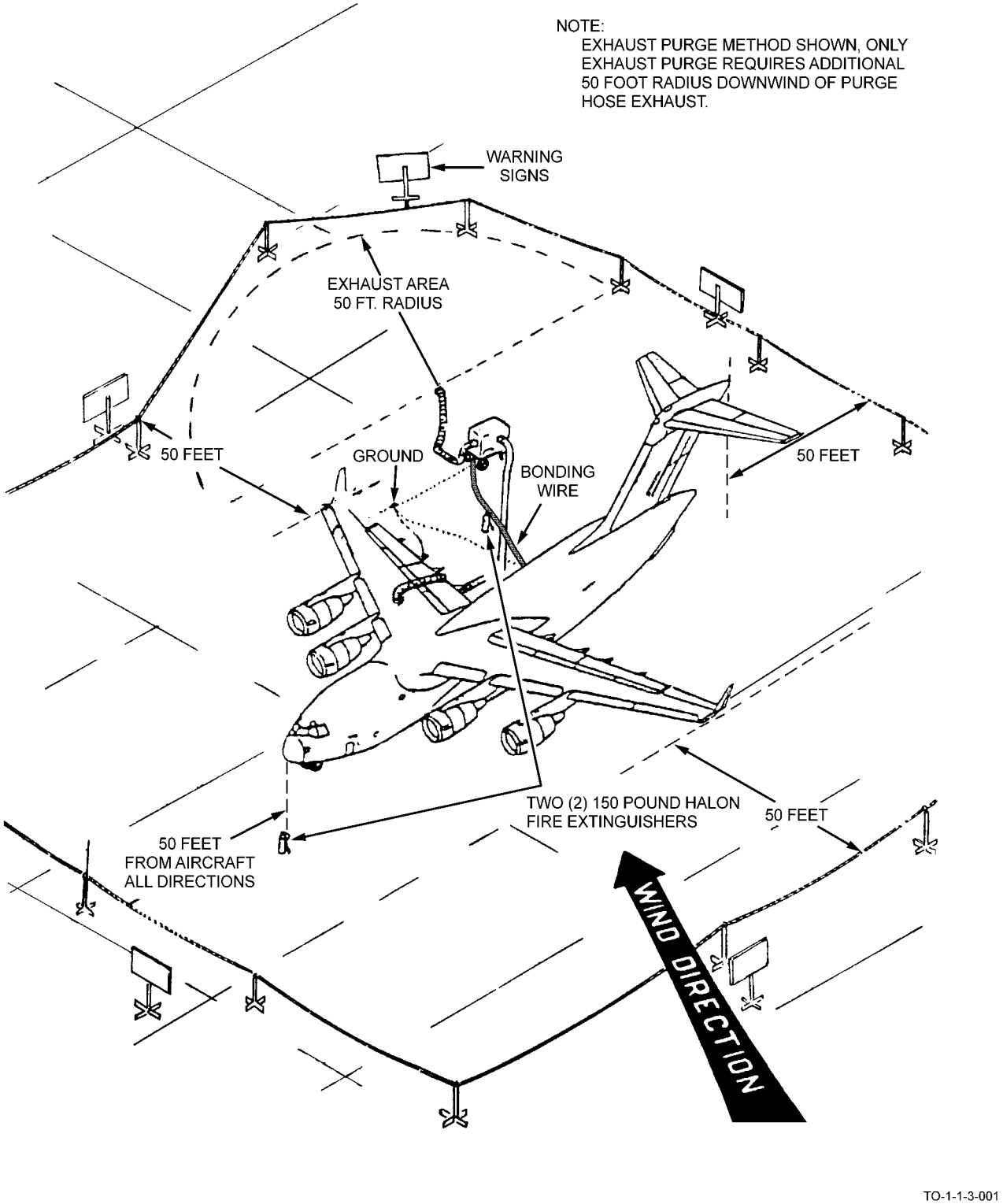

Figure 5-1. Typical Combination Purge in Open Repair Area

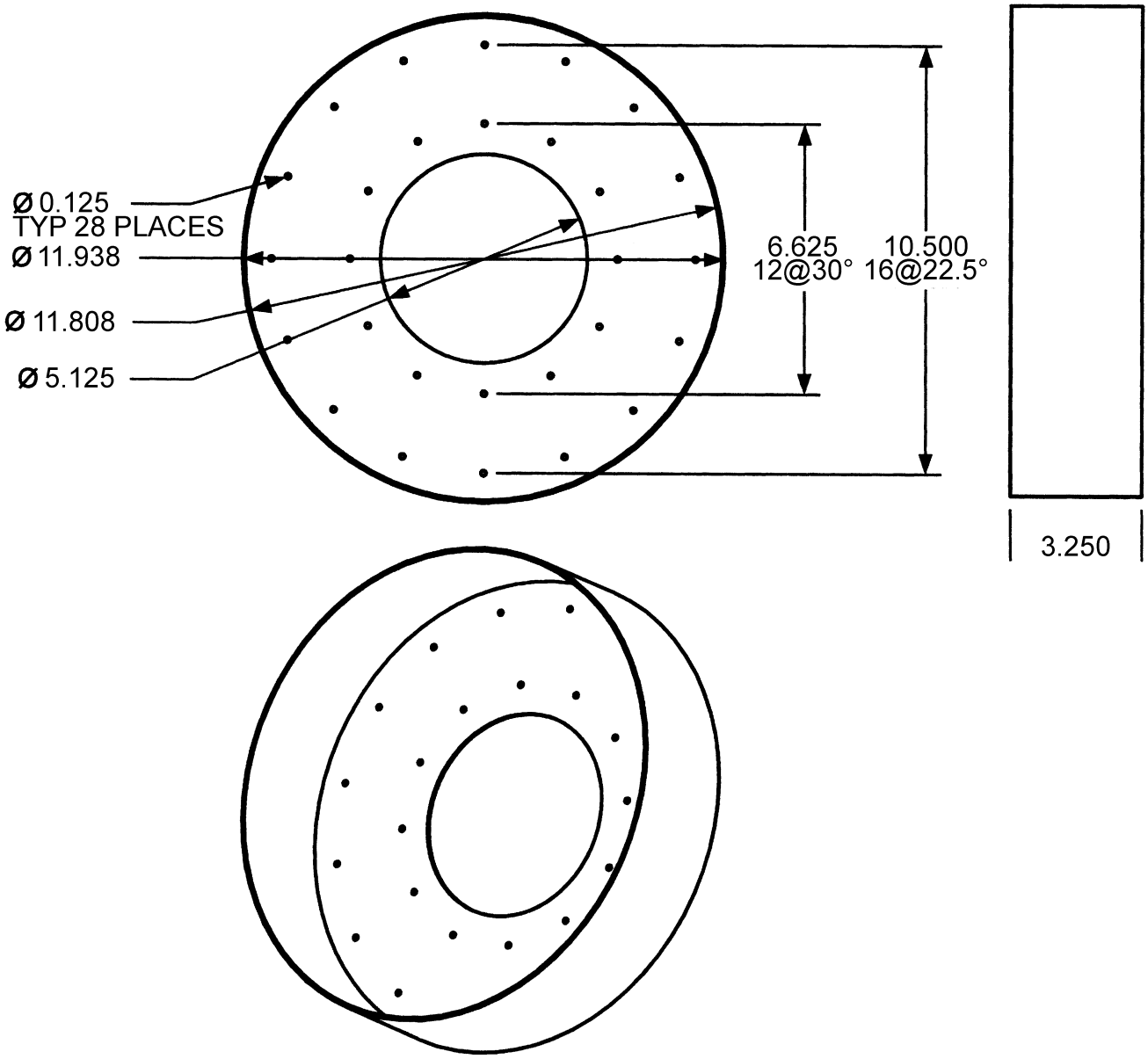

TO-1-1-3-002

Figure 5-2. Exhaust Purge Adapter (Sheet 1 of 12)

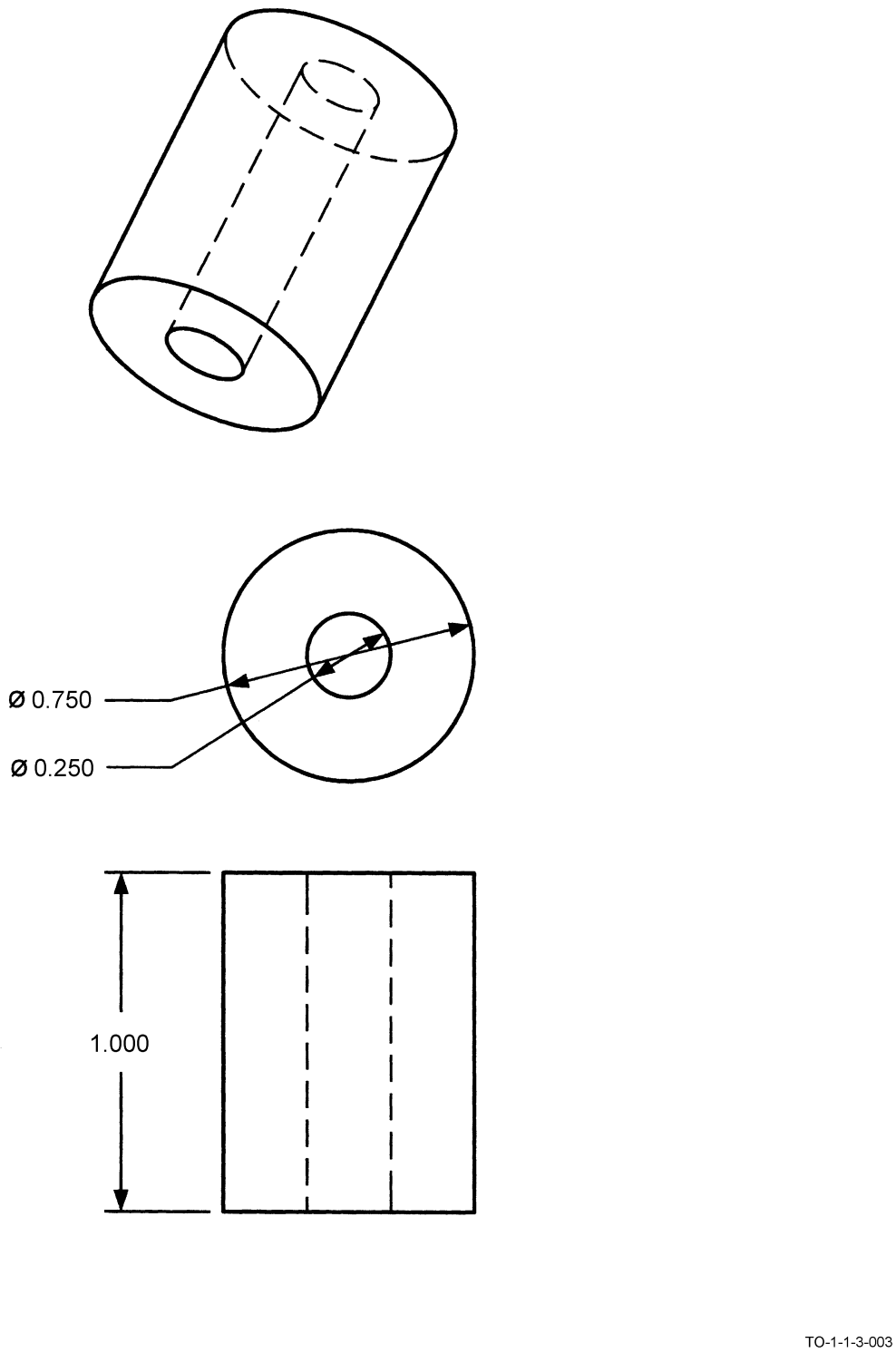

Figure 5-2. Exhaust Purge Adapter (Sheet 2)

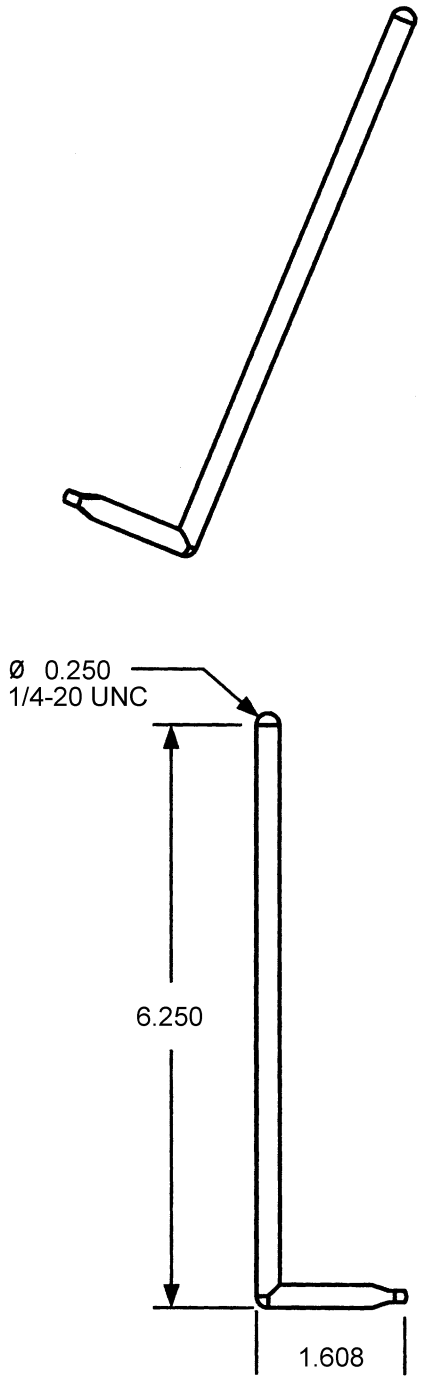

TO-1-1-3-004

Figure 5-2. Exhaust Purge Adapter (Sheet 3)

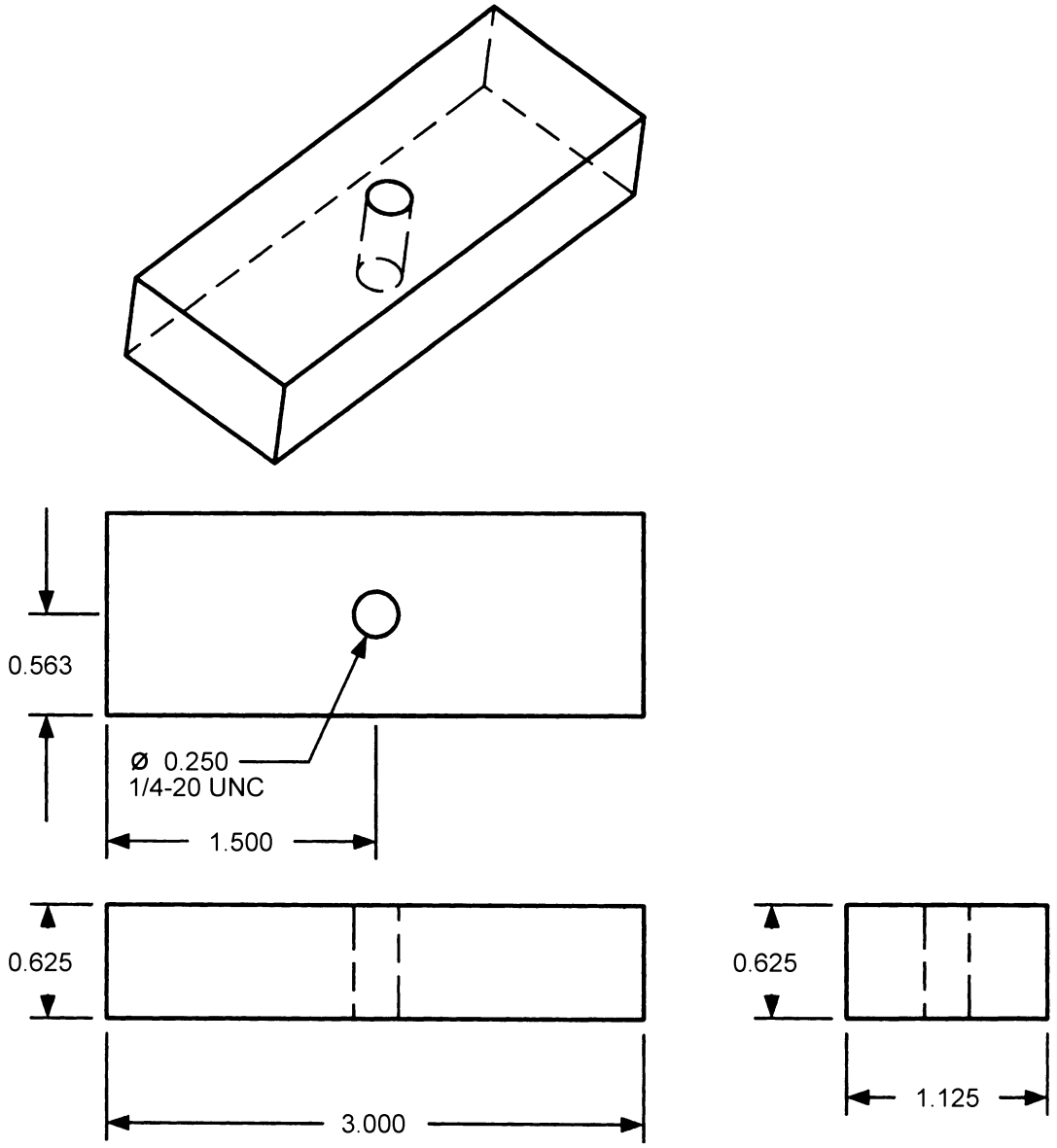

TO-1-1-3-005

Figure 5-2. Exhaust Purge Adapter (Sheet 4)

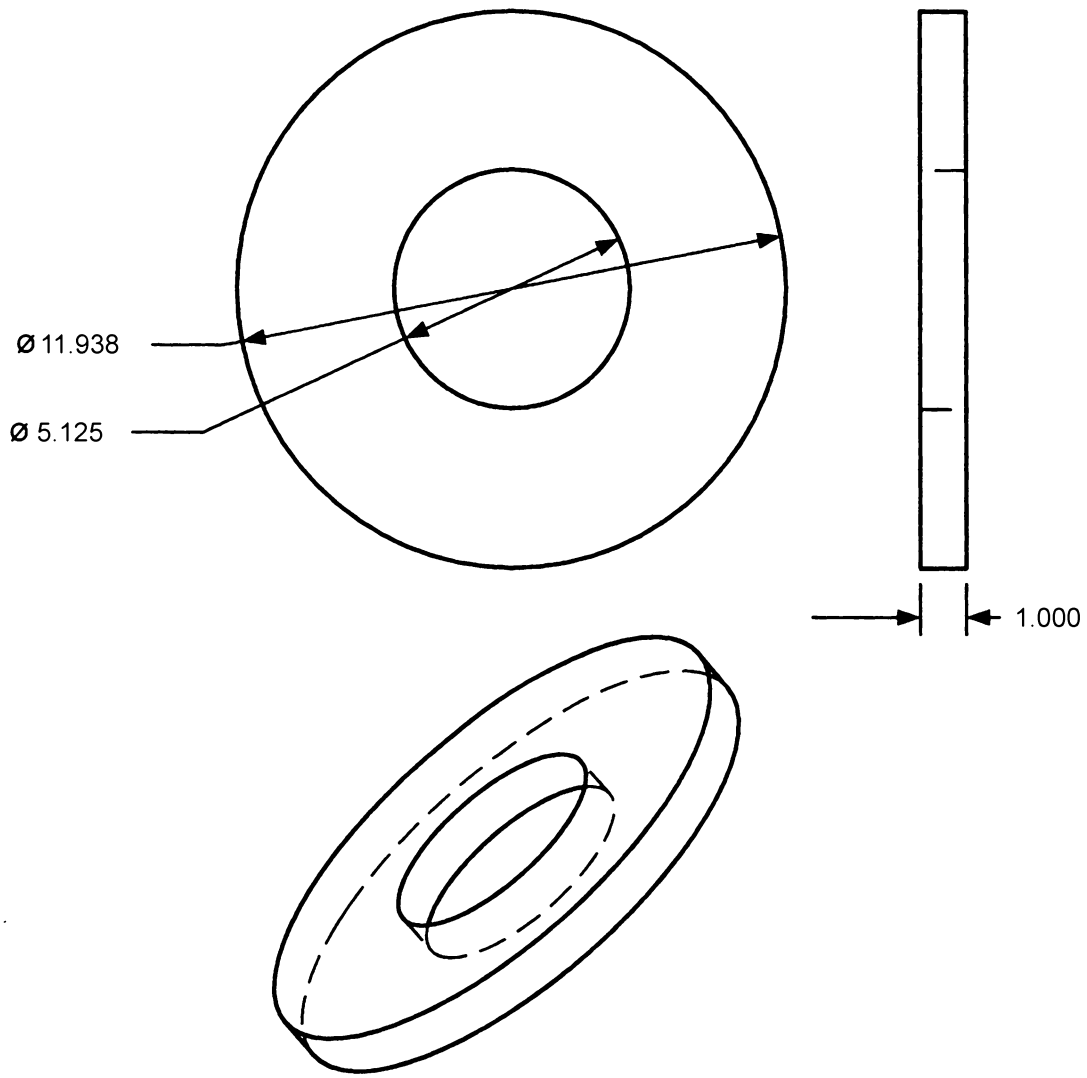

TO-1-1-3-006

Figure 5-2. Exhaust Purge Adapter (Sheet 5)

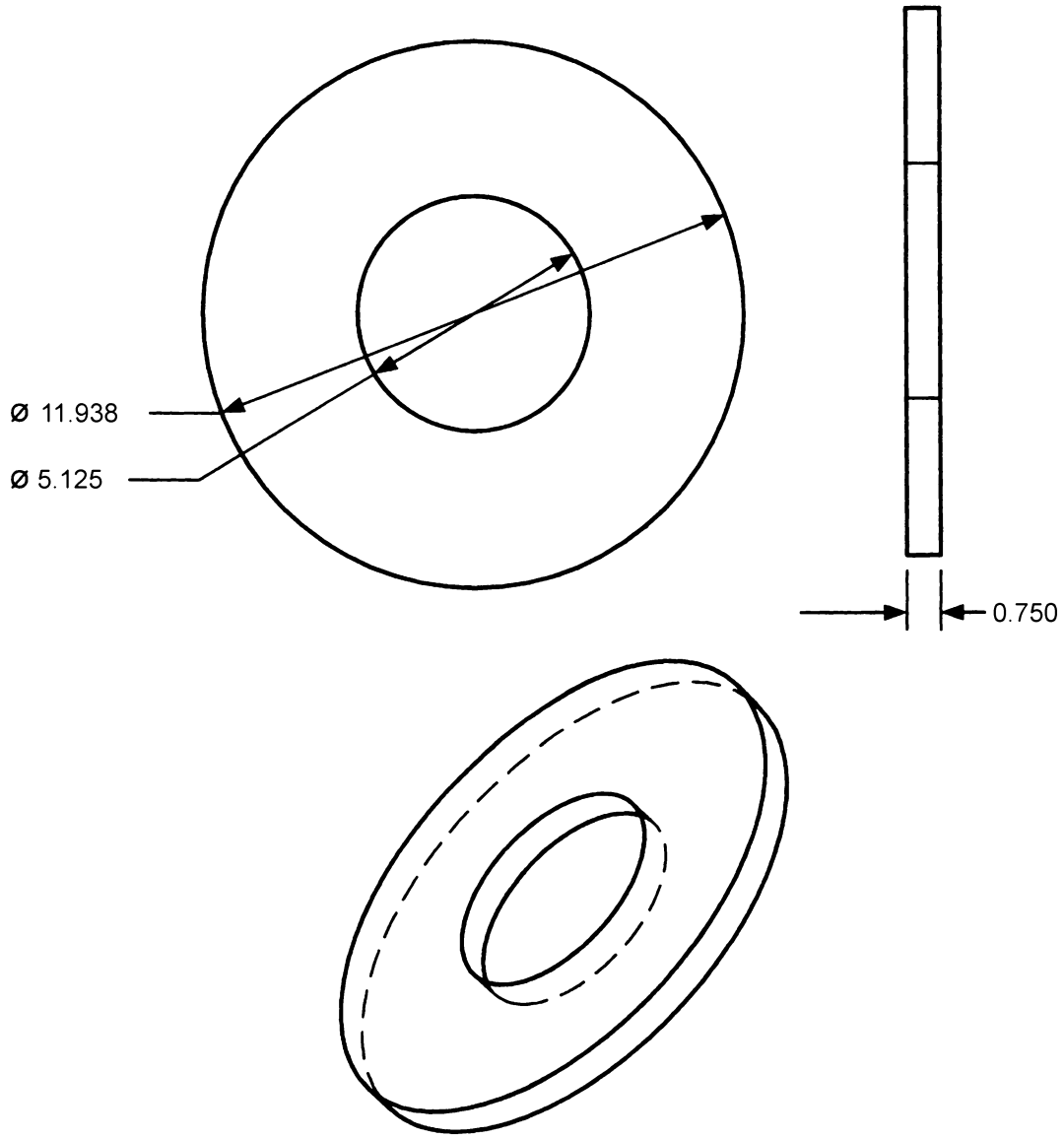

TO-1-1-3-007

Figure 5-2. Exhaust Purge Adapter (Sheet 6)

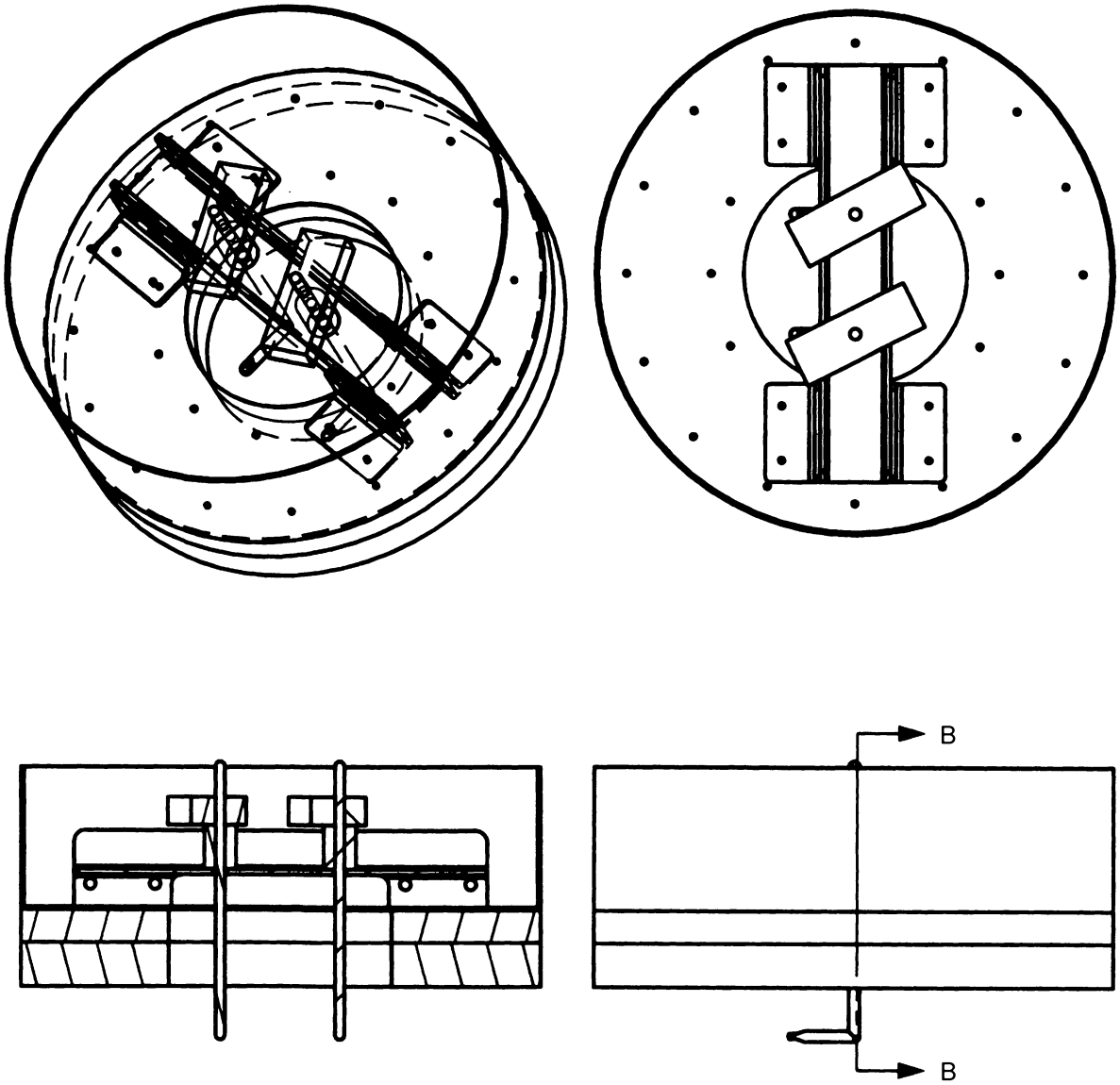

TO-1-1-3-008

Figure 5-2. Exhaust Purge Adapter (Sheet 7)

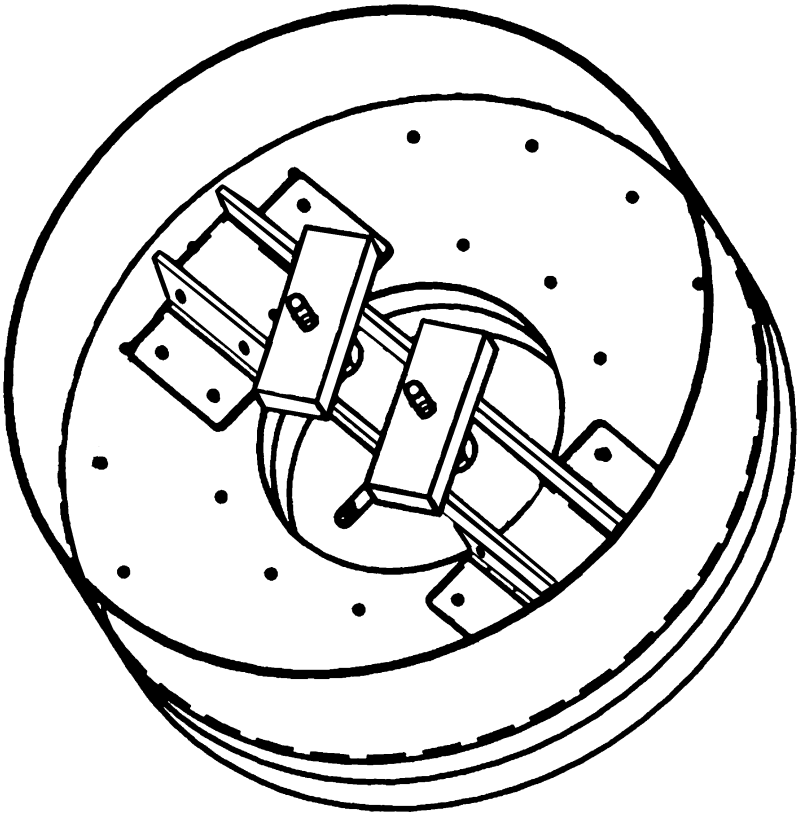

TO-1-1-3-009

Figure 5-2. Exhaust Purge Adapter (Sheet 8)

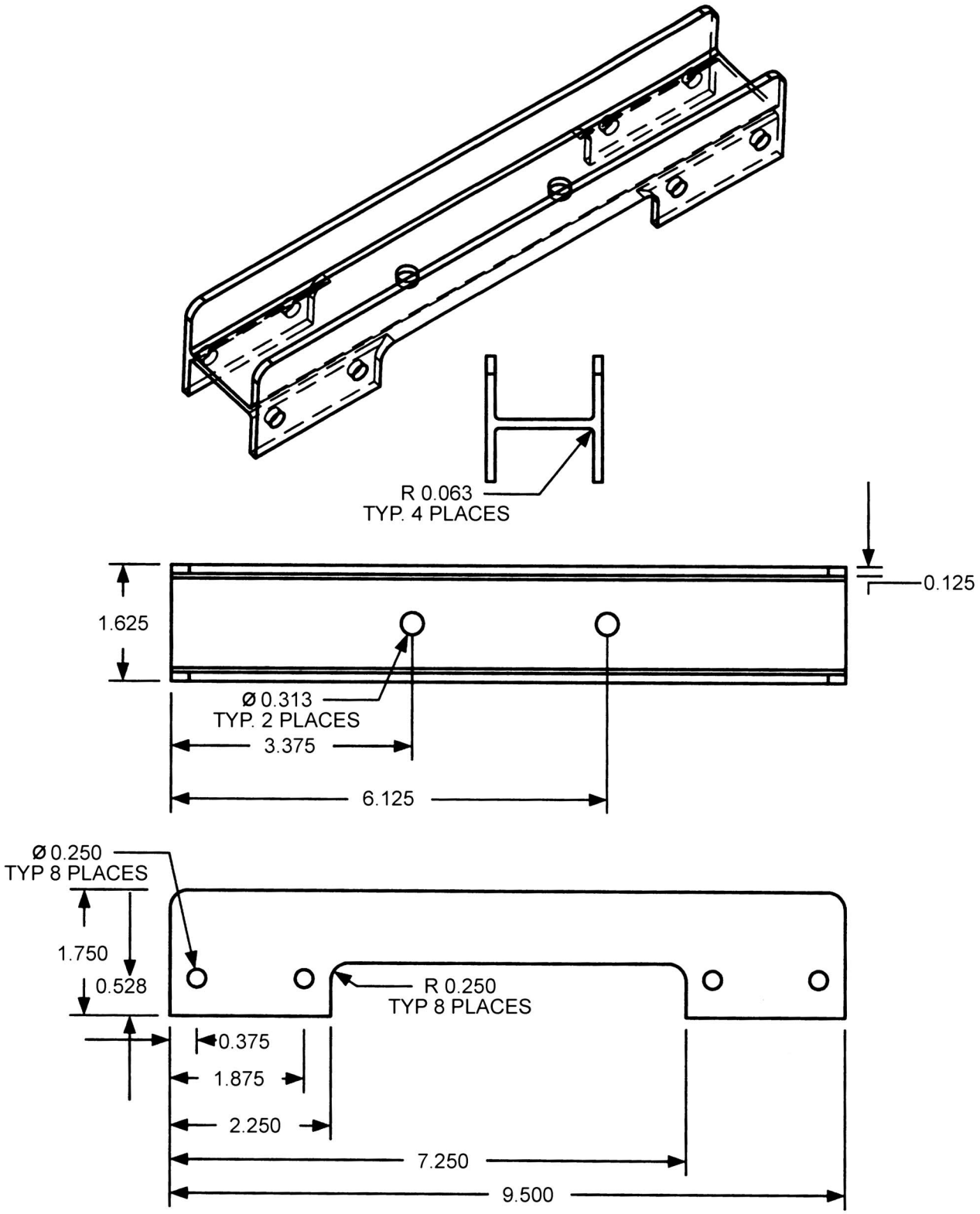

TO-1-1-3-010

Figure 5-2. Exhaust Purge Adapter (Sheet 9)

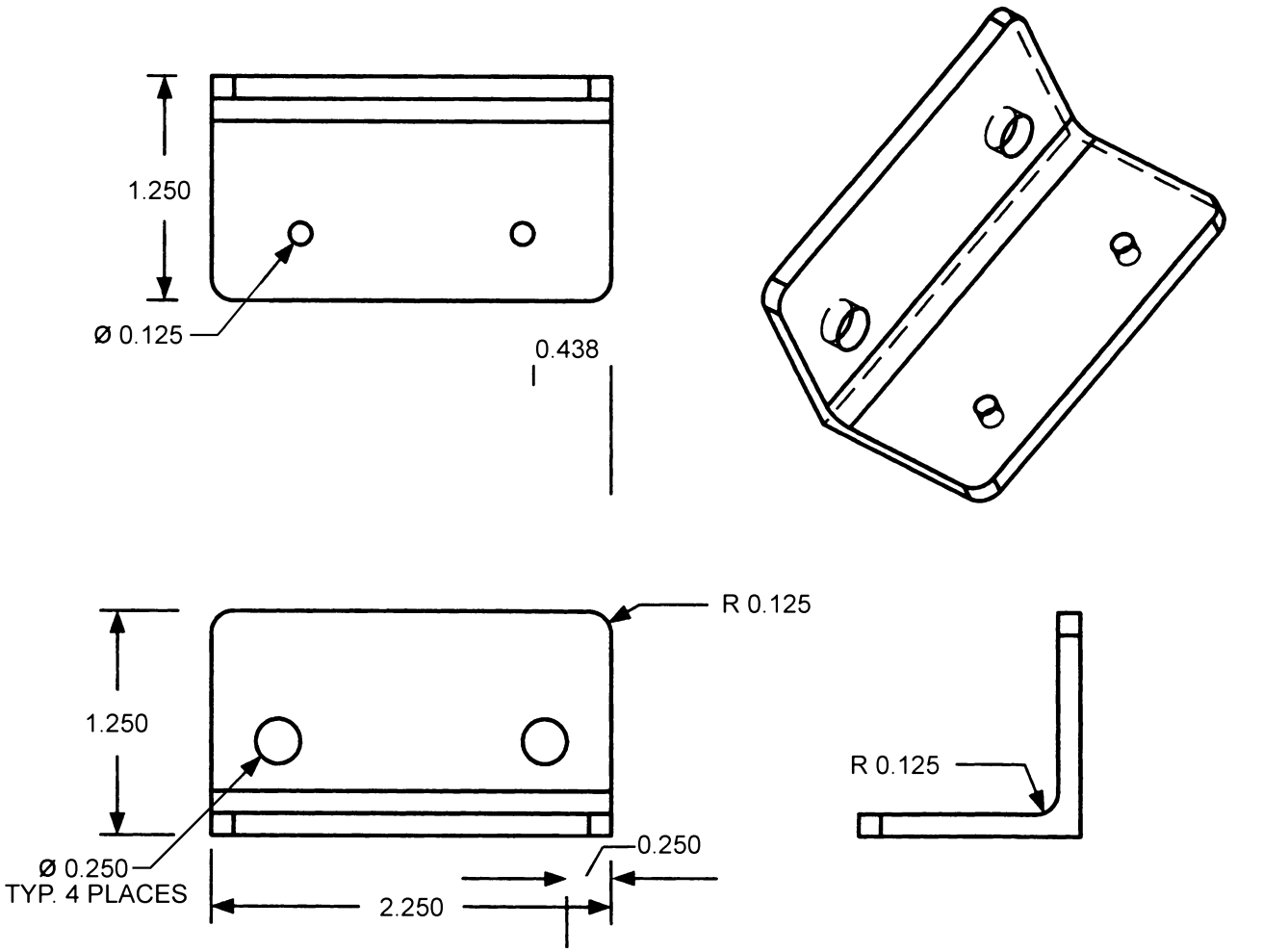

Figure 5-2. Exhaust Purge Adapter (Sheet 10)

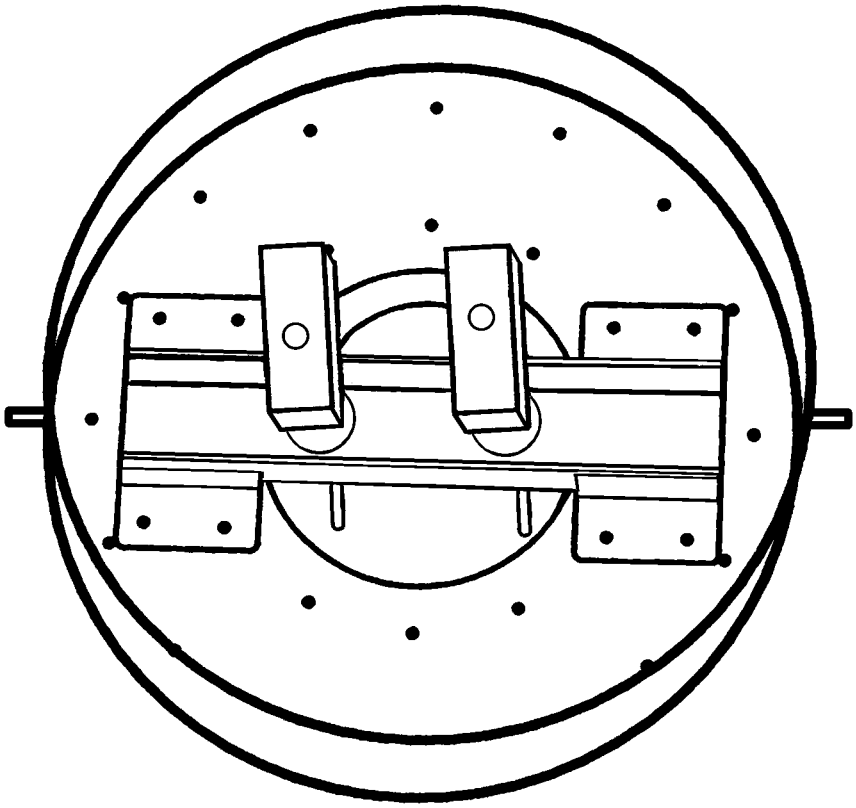

TO-1-1-3-012

Figure 5-2. Exhaust Purge Adapter (Sheet 11)

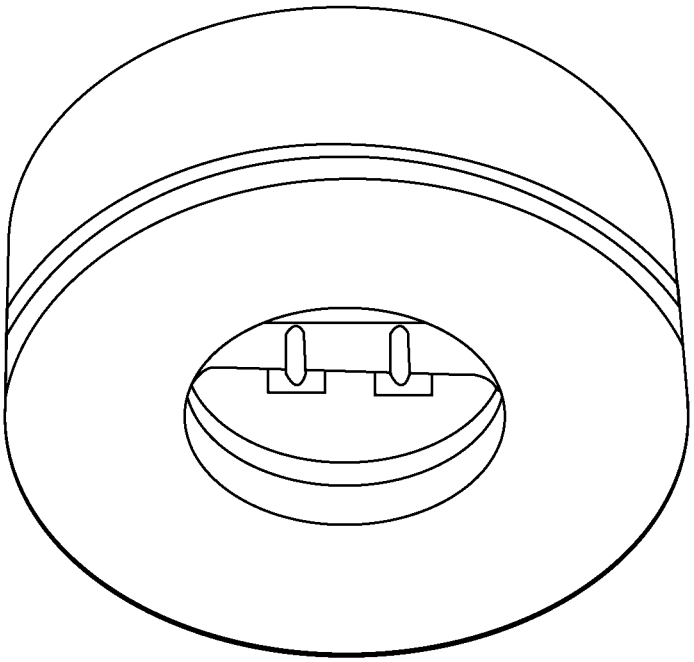

TO-1-1-3-013

Figure 5-2. Exhaust Purge Adapter (Sheet 12)

CHAPTER 6
INTEGRAL TANKS

6.1 PURPOSE.

This chapter provides methods and procedures for locating and permanently repairing integral fuel tank leaks. These procedures can be time consuming and may require extensive aircraft preparation.

6.2 GENERAL.

6.2.1 Integral fuel tanks were developed because they afford greater fuel capacity with a decrease in weight over typical fuel cell construction. The fuel tanks are designed with a seal plane that's been sealed with structural adhesives, various type sealants, gaskets and O-rings. Integral fuel tanks have been built into both the wing and fuselage sections of aircraft with the primary structure forming the boundaries of the fuel tank. (See Figure 6-1.)

6.2.2 The fuel leak detection/repair methods and procedures described in this chapter are more involved than the methods and procedures described in Chapter 4.

6.3 FUEL LEAKS.

6.3.1 General. Successfully locating and permanently repairing a fuel leak is dependent on taking the time necessary to properly identify the exact leak exit point, the internal source, and finally, using the proper repair technique. Using leak path analysis and following a general troubleshooting and repair sequence of events will enable more efficient and effective fuel leak repair procedures.

6.3.2 Leak Path Analysis. Leak path analysis is the act of analyzing possible causes of a fuel leak, the exit point, the internal source and the possible path between the exit point and internal source. Leak path analysis should be performed for every leak and at various times throughout the leak evaluation and troubleshooting process. Reviewing the structural technical data for the applicable aircraft will serve as a valuable tool to help determine fuel tank boundary construction, fasteners types and possible leak paths. (See Figure 6-14.)

6.3.2.1 Leak path analysis should be performed when the exact leak exit point is identified but before the leak source is known. Using leak path analysis at this point serves as a guide for where to begin inspecting inside the fuel tank.

6.3.2.2 Leak path analysis should also be performed after the exact leak exit point and internal source have been located. This serves to help isolate the entire leak path so it can be exposed and repaired. If the entire leak path is not identified, there is a chance the fuel leak will return if another internal source develops.

6.3.2.3 When performing leak path analysis, keep in mind that fuel can pass through a near invisible crack in the structure; therefore, structural failure should be considered as a possible cause of the fuel leak.

6.3.3 General Troubleshooting and Repair Sequence of Events. Developing a routine sequence of events for fuel leak troubleshooting and repair can serve to enhance fuel leak repair capabilities. The following sequence of events is provided as a guide and should be used during fuel leak troubleshooting and repair:

a. Determine the exact leak exit point using the approved procedures in either Chapter 4 or this chapter.

b. If the fuel leak exit point borders fuel tank boundaries, ensure the fuel leak has been isolated to only one tank using the procedures in Chapter 4.

c. Perform leak path analysis using the applicable weapons system structural technical order as a guide to help identify more specific areas to inspect inside the fuel tank.

d. Perform a thorough interior fuel tank inspection in the general vicinity of the fuel leak exit point in accordance with Paragraph 6.5.

e. Determine the leak source using the approved methods in this chapter.

f. Perform leak path analysis to help identify and uncover the entire leak path.

g. Perform permanent repair using the approved methods in this chapter.

h. Confirm repair prior to refueling the aircraft using one of the approved methods in this chapter. Typically, the best method to use is the same one that was used to identify the leak source.

6.4 LEAK EXIT POINT DETECTION.

6.4.1 Support Equipment. The equipment listed below is typically used for locating leak exit points, sources and confirming repairs. Common consumables are listed in Chapter 8, Table 8-1. Safety and documentation requirements identified in this technical order shall be followed while using this equipment.

6.4.1.1 Caps, Plugs and Cover Plates. Caps, plugs and cover plates are used to cover openings in fuel tanks, plumbing and components to enable application of positive/negative pressure. They may be requisitioned from supply or locally manufactured upon approval from the weapons system ASG.

6.4.1.2 Tank Pressurization System (TPS). The TPS is used in conjunction with the Helitest Wing Kit (HWK) to apply helium pressure to detect a leak exit point, or source.

6.4.1.3 Ultraviolet Light. The ultraviolet light is used in conjunction with florescent dye to aid in detecting a leak exit point or source.

6.4.1.4 Leakage Tracing Device. This device contains a reservoir and controls to enable application of air, dye, dyed fuel under pressure, vacuum or a combination of both, using the accessories identified below. (See TO 33D2-3-27-1 for more information.)

6.4.1.4.1 Vacuum Cup. The vacuum cup is an accessory to the leakage tracing device and used to confirm a sealant repair or to check under head-sealed fasteners for leakage by pulling air or dyed fuel through the aircraft structure and into the plastic container.

6.4.1.4.2 Double Cup Assembly. The double cup assembly is an accessory to the leakage tracing device. A vacuum is created by the leakage tracing device to hold the outer cup against the aircraft structure; the inner cup is used to contain or capture a leak detection media to aid in fuel leak source identification.

6.4.1.4.3 Hollow Bolt Dye Injector. This hollow bolt injector is an accessory to the leakage tracing device and used to inject dye through bolt holes and in between the aircraft structure to aid in fuel leak source identification.

6.4.1.5 Pressure Box. The pressure box is used to apply localized pressure to external aircraft surfaces to aid in fuel leak source identification. It can be used with or without an air strut. The box can also use various type end plates to accommodate irregular aircraft structural surfaces. It may be used while performing dye injection, pressurization and vacuum fuel leak detection methods.

6.4.1.6 Pressure and Vacuum Tank Leakage Test Control Panel. The control panel is used to regulate air pressure going to an integral tank during positive or negative pressure tests. It can be used with or without the leakage tracing device.

6.4.1.7 Manometers. Vertical and “U-shaped” manometers are used to measure positive or negative pressure inside fuel tanks/cells. The only fluid authorized for use in manometers is a fifty percent mixture of distilled water and ethylene glycol. Manometer is omitted when pressurizing the aircraft with the weapon specific TPS, in accordance with TO 33D2-3-56-21. Manometers are shown in Chapter 8.

6.4.2 Pressure Test.

6.4.2.1 General. If locating an exact leak exit point using the approved methods in Chapter 4 has been unsuccessful, a pressure test may be used. A pressure test is effective for simultaneously locating multiple leaks in a fuel tank and for locating leaks that only appear under stress or in flight. This test can also be used to confirm fuel tank repairs prior to refueling the aircraft. (See Figure 6-21.)

6.4.2.2 Required Equipment and Materials. Water manometer (Manometer is omitted when pressurizing the aircraft with the weapon specific TPS, in accordance with TO 33D2-3-56-21), pressure/vacuum test integral tank adapter door (with globe valve and positive/negative pressure relief valves), pressure/vacuum integral tank leakage test control panel, or TPS control panel, caps, plugs and cover plates, air source, helium source, non-corrosive leak detection compound, non-waxed or grease pencil and an authorized cleaning solvent.

6.4.2.3 Procedures.

a. Ensure compliance with applicable precautions and procedures in this technical order.

b. Ensure aircraft or applicable fuel tank(s) is/are defueled in accordance with the weapons system technical order.

c. Ensure applicable fuel tank(s) is/are drained in accordance with the weapons system technical order.

d. Ensure applicable fuel tank(s) is/are purged in accordance with the Chapter 5.

e. Prepare fuel tank by installing caps, plugs and cover plates, as required, in accordance with the applicable weapons system technical order, or in accordance with the applicable weapon system TO for the TPS.

f. Install pressure/vacuum test integral tank adapter door on the aircraft in accordance with the applicable weap-

ons system technical order, or in accordance with the applicable weapon system TO for the TPS. Ensure globe valve on the door is closed.

g. Ensure gate valve on the pressure/vacuum integral tank leakage test control panel is closed, in accordance with the applicable weapon system TO for the TPS.

h. Connect air source to the pressure/vacuum integral tank leakage test control panel, in accordance with the applicable weapon system TO for the TPS.

i. Connect air hose from the pressure port on the pressure/vacuum integral tank leakage test control panel to the pressure/vacuum test integral tank adapter door on the aircraft, in accordance with the applicable weapon system TO for the TPS.

j. Connect helium source to the TPS, in accordance with TO 33D2-3-56-21.

k. Connect manometer hose from the pressure/vacuum test integral tank adapter door on the aircraft to the positive pressure fitting on the water manometer. Ensure the negative pressure fitting on the water manometer is not capped or plugged. Manometer is omitted when pressurizing the aircraft with the weapon specific TPS, in accordance with TO 33D2-3-56-21.

WARNING

Failure to ensure proper manometer fluid levels and applicable caps are removed prior to starting a positive or negative pressure test may cause serious damage to the aircraft or personnel injury/death. Ensure that no portions of the manometer are blocked by any FOD nor deposits. See Chapter 8 for a blockage test. The water manometer shall be inspected prior to starting a positive or negative pressure test to ensure it is serviced to the correct fluid level. Perform visual inspection and ensure TPS is within calibrated period, prior to use.

l. Apply 100 psi maximum to the pressure/vacuum integral tank leakage test control panel, or TPS control panel.

m. Open the gate valve on the pressure/vacuum integral tank leakage test control panel and adjust the regulator until the pressure gauge reads four psi.

n. Open the globe valve on the pressure/vacuum test integral tank adapter door on the aircraft and pressurize the fuel tank to the maximum allowable air pressure in accordance with the applicable weapons system technical order.

CAUTION

To avoid possible structural or sealant damage, always pressurize and relieve pressure slowly, taking at least 15 minutes. Additional pressure will not aid in leak detection. The TPS automatically regulates the pressure, in accordance with the weapon specific TO 33D2-3-56-21.

o. When using the TPS, ensure selector switch is in the Air position and press start. The TPS control panel will attempt to pressurize the tank to 0.7 psi. If 0.7 cannot be achieved, correct gross leakage and reapply pressure. Once 0.7 psi is attained, place the selector switch to Helium and press start again. Once the tank pressure attains a maximum 1.5 psi., wait 10 minutes and begin detecting for the presence of helium, with the HWK, in accordance with TO 33D2-3-56-11.

p. Apply leak detection compound to the suspected leak exit area and carefully spread it with a brush. Closely observe the area and look for the formation of air bubbles. If in doubt, repeatedly wipe off the area and reapply leak detection compound to verify bubbles.

q. Mark exact leak exit point.

r. Wash off the leak detection compound from the aircraft surface within 24 hours.

s. Once exit point has been determined, using the TPS and HWK method, press purge on the TPS control panel, in accordance with TO 33D2-3-56-21.

6.5 FUEL TANK INSPECTION.

Aircraft fuel tanks should be inspected for overall condition when entered. Identifying and repairing obvious defects early will enhance aircraft reliability. Fuel tanks will be inspected for contaminants such as water or microbial growth, sediment, foreign objects, top coat peeling, structural or fastener damage and overall sealant condition. Document noted discrepancies in the aircraft's AFTO Forms 781A, 95, and 427/428, as applicable. Clean, and/or repair discrepancies as required.

6.5.1 Free Water and Microbial Growth. A common and potentially serious jet fuel contaminant is "free" water. Water can enter and contaminate jet fuel at any point from the refinery to the aircraft fuel tank. A build up of water, coupled with adequate growing conditions inside a fuel tank, can provide an atmosphere for microbial growth.

6.5.1.1 Microbial growth produces a variety of chemicals that are detrimental to fuel systems including: hydrogen sulfide, protein coating, organic acids and surfactants/soaps. Microbial growth appears as a slimy, brownish substance with a jelly-like consistency; it is typically referred to as "apple jelly". Microbial growth can coat fuel systems components and may eventually cause clogging of engine filters or scavenge systems, fuel quantity system failure or anomalies, top coat peeling, and eventually, corrosion.

6.5.1.2 Inspect the fuel tank in the general repair area, low lying areas around the fuel tank drains and visible fuel quantity probes for signs of microbial growth. Inspection of these areas should provide an indication of the overall condition of the rest of the fuel tank(s). Remove small quantities by wiping with lint-free cheesecloth; large quantities may need to be scraped off. If large quantities of apple jelly are present, a thorough inspection of the remaining fuel tanks shall be accomplished. Contact the local fuel supply laboratory/squadron with inspection findings. If conditions dictate a fleet-wide inspection, contact the weapons system ASG and the MAJCOM Aircraft Fuels Systems Functional Manager/Superintendent.

6.5.2 Condition of Structure.

CAUTION

Failure to take appropriate actions may lead to potential safety-of-flight fuel system failures and ultimately to engine power loss.

A thorough inspection of the fuel tank structure around the general leak area should be performed to help isolate a leak source. As a minimum, inspect the general leak area for:

a. Loose, damaged or missing fasteners.

b. Structural cracks. Hairline cracks are difficult to see; if a crack is suspected, contact Fabrication Flight personnel.

6.5.3 Condition of Sealant. A thorough inspection of the sealant near the leak area should be performed to help isolate a possible leak source. Examine the sealant closely; visible surface defects may not necessarily be the source of the leak. As a minimum, inspect for:

a. Previously repaired areas.

b. Cracks, scuffs or nicks in the sealant.

c. Air bubbles in, or shrinkage of, the sealant.

d. Lack of adhesion by applying air pressure, not to exceed 100 psi, around the edge of the sealant. Ensure the nozzle is held no less than one inch from the sealant.

e. Loss of luster, discoloration, chalking or loss of top coat.

f. Loss of elasticity by firmly pressing sealant with a three-sixteenths inch diameter, or larger, blunt metal punch. The sealant is defective if it cracks or fails to return to its original position.

g. Mark the suspect defective areas.

6.6 LOCATING A LEAK SOURCE.

Fuel leak sources may be located using several approved pressure, helium detection or vacuum methods. Evaluate the leak and select the method that would provide the most efficient and effective results. If one method does not work, select another and continue until the leak source is isolated. These same methods may also be used to verify fuel leak repairs.

NOTE

Non-corrosive leak detection compound dyed with locally purchased red food coloring mixed at 12:1 may be substituted in place of dyed fuel, as applicable.

6.6.1 Pressure Methods. The pressure methods are blow back, pressure box, pressure box and dye, double cup and dye, and hollow bolt and dye. These methods use non-corrosive leak detection compound or dyed fuel as the leak detection media.

6.6.2 Helium Detection Method. The helium detection method is a very sensitive method of leak detection. Helium is non-corrosive and due to the extremely minute size of the helium molecule, it can pass through the smallest of leak paths. When helium pressure is applied to one end of a leak path, it will travel through the leak path and can be detected, on the opposite end.

6.6.3 Hydrogen-Nitrogen Detection Method. The 5% hydrogen-95% nitrogen detection method is the most sensitive method of leak detection. The gas mixture is non-corrosive and due to the extremely minute size of the hydrogen molecule, it can pass through the smallest of leak paths. When the gas mixture pressure is applied to one end of a leak path, it will travel through the leak path and can be detected, on the opposite end. There are several recently-developed devices that can be used to accomplish leak detections with the hydrogen-nitrogen gas mixture. These are the Sensistor H2000, Sensistor Extrima, Trace 101, and the Hytracker, manufactured by Aerowing. Except for the H2000, these devices are intrinsically-safe. Use of the H2000 is subject to the restrictions in paragraph 2.7.5.6.

6.6.4 Vacuum Methods. The vacuum methods are vacuum and dye and vacuum cup. These methods use non-corrosive leak detection compound or dyed fuel as the leak detection media.

6.6.5 Aircraft Preparation. All procedures outlined in this chapter used to locate leak sources require entry into the fuel tank. Ensure the aircraft is prepared for maintenance using the applicable weapons system technical order and the following general procedures:

a. Ensure compliance with applicable precautions and procedures in this technical order.

b. Ensure the exact leak exit point has been identified and marked.

c. Ensure aircraft or applicable fuel tank(s) is/are defueled in accordance with the weapons system technical order.

d. Ensure applicable fuel tank(s) is/are drained in accordance with the weapons system technical order.

e. Ensure applicable fuel tank(s) is/are purged in accordance with the Chapter 5.

f. Ensure the fuel tank interior has been thoroughly inspected in accordance with Paragraph 6.5 and suspect areas have been marked.

6.6.6 Blow Back.

6.6.6.1 General. The blow back procedure is accomplished by applying non-corrosive leak detection compound to suspect leak source and then directing air pressure using an air nozzle into the exact leak exit point. Bubbles will appear in the leak detection compound when air enters the leak path. (See Figure 6-22.) To ease identification of leak source starting points on fasteners and rivets, place a magnet on exterior leak exit point fastener or rivet head. From inside of tank, run light-weight ferrous metal object (i.e., dull end of a scribe, safety wire, allen wrench, etc.) over the general area of the fastener or rivet until the object affixes itself to the specific fastener.

6.6.6.2 Required Equipment and Materials. Air source, nozzle, non-corrosive leak detection compound, lint-free cheese cloth, brush and a non-waxed or grease pencil.

6.6.6.3 Procedures.

a. Prepare aircraft for maintenance in accordance with Paragraph 6.6.5.

b. Apply leak detection compound to the suspect internal leak areas.

c. Apply air pressure using a nozzle to the exact leak exit point. The nozzle should be kept approximately one-half inch from the surface and occasionally moved around to vary the angle the air is introduced into the leak exit point. Depending on the fuel leak classification and location, the air pressure may need to be varied from 1 to 100 psi maximum to locate the fuel leak.

d. Closely monitor the leak detection compound for air bubbles.

e. The leak path can be verified by applying air to the internal leak source and leak detection compound to the external leak exit point.

f. Mark the leak source and repair as required.

6.6.7 Helium Detection Method.

WARNING

The HWK Control Box must be located outside of the fuel system repair area while open tanks are present. Only the Visual Safety Probe is allowed in an open fuel systems environment.

The helium leak detection method works by applying low pressure helium at the exit point of the identified leak path, using the HWK in accordance with TO 33D2-3-56-11. Then, entering the tank with the HWK safety probe and detecting where the helium is entering the tank. This will identify the leak source.

6.6.7.1 Required Equipment and Materials. HWK, helium source, vacuum tape, flexible film, lint-free cheese cloth, solvent, non-waxed or grease pencil.

6.6.7.2 Procedures.

a. Prepare aircraft for maintenance in accordance with Paragraph 6.6.3.

b. Apply low pressure helium to the external leak location in accordance with TO 33D2-3-56-11.

c. Sample and detect helium inside the tank in accordance with TO 33D2-3-56-11.

d. Mark the leak source and repair as required.

6.6.8 Pressure Box.

6.6.8.1 General. The pressure box procedure works by pressurizing a large exterior surface at once. The air inside the pressure box is forced through the leak path into the fuel

tank. The pressure box end plates may be rectangular (for flat surfaces) or contoured (for convex surfaces such as beaver tails or engine nacelle support structure). This method is useful for locating seep type fuel leaks.

6.6.8.2 Required Equipment and Materials. Pressure box and applicable end plates, pressure/vacuum integral tank leakage test control panel, air source, pig putty, air strut or shot bags, non-corrosive leak detection compound and non-waxed or grease pencil.

6.6.8.3 Procedures.

a. Prepare aircraft for maintenance in accordance with Paragraph 6.6.5.

b. Install the applicable end plates on the pressure box.

c. Ensure gate valve on the pressure/vacuum integral tank leakage test control panel is closed.

d. Connect air source to the pressure/vacuum integral tank leakage test control panel.

e. Position the pressure box over the leak exit point.

(1) For lower surfaces, support the pressure box with the air strut. The air strut should have at least 10 inches of free piston travel to allow for changes in wing position.

(2) For upper surfaces, hold the pressure box in place using shot bags.

f. Connect air hose from the pressure port on the pressure/vacuum integral tank leakage test control panel to the pressure box.

g. If the pressure box is being used on a lower surface, apply 100 psi maximum, or as specified in the applicable weapons system technical order, to the air strut.

h. Apply 100 psi maximum to the pressure/vacuum integral tank leakage test control panel.

i. Open the gate valve on the pressure/vacuum integral tank leakage test control panel and adjust the regulator until the pressure gauge reads four psi.

j. Check the pressure box for leaks; temporarily repair with pig putty as required.

k. Enter the fuel tank and apply leak detection compound to the suspect leak areas. Closely monitor the leak detection compound for air bubbles.

l. Mark the leak source and repair as required.

6.6.9 Pressure Box and Dye.

6.6.9.1 General. The pressure box and dye procedure works by pressurizing a large exterior surface at once. The air inside the pressure box forces dyed fuel through the leak path into the fuel tank. The pressure box end plates may be rectangular (for flat surfaces) or contoured (for convex surfaces such as beaver tails or engine nacelle support structure). This method is useful for locating seep type fuel leaks. (See Figure 6-24.)

6.6.9.2 Required Equipment and Materials. Pressure box and applicable end plates, pressure/vacuum integral tank leakage test control panel, air source, pig putty, air strut or shot bags, a sheet of plastic, flat dye injection nozzle, dye bottle, dyed fuel mixture and a non-waxed or grease pencil.

6.6.9.3 Procedures.

a. Prepare aircraft for maintenance in accordance with Paragraph 6.6.5.

b. Install the applicable end plates on the pressure box.

c. Position a sheet of plastic material slightly larger than the pressure box over the leak exit point. Secure the plastic sheet to the aircraft structure by applying tape around the entire circumference of the plastic sheet.

d. Make a small cut in the plastic sheet and insert a flat dye injection nozzle with tube and dye bottle connected (see Figure 6-24.) Apply tape over the insertion hole to prevent air leakage.

e. Position pressure box over the plastic sheet ensuring the box is centered on the plastic and the dye bottle and tube are outside of the pressure box.

(1) For lower surfaces, support the pressure box with the air strut. The air strut should have at least 10 inches of free piston travel to allow for changes in wing position.

(2) For upper surfaces, hold the pressure box in place using shot bags.

f. Ensure gate valve on the pressure/vacuum integral tank leakage test control panel is closed.

g. Connect air hose from the pressure port on the pressure/vacuum integral tank leakage test control panel to the pressure box.

h. Apply 100 psi maximum to the pressure/vacuum integral tank leakage test control panel.

i. Open the gate valve on the pressure/vacuum integral tank leakage test control panel and adjust the regulator until the pressure gauge reads four psi.

j. Remove bottle from the injection nozzle and loosen the clamp to bleed air from the plastic sheet.

k. If the air strut is being used to hold the pressure box to the lower aircraft structure, apply 100 psi to the strut.

l. Pressurize the pressure box to four psi to force out trapped air from under the plastic sheet.

m. Close tube clamp on the injection nozzle and attach the dyed fuel bottle.

n. Relieve pressure from the pressure box, open the injection nozzle tube clamp and inject dyed fuel under the plastic sheet.

o. Close the injection nozzle clamp and remove the bottle.

p. Apply four psi to the pressure box and check for leaks around the pressure box. Temporarily repair leaks with pig putty as required.

q. Continue the procedure as long as required to allow dyed fuel to travel the leak path. Depending on the fuel leak classification, it may take 24 hours or more for the dye to appear inside the fuel tank.

r. Enter the fuel tank and closely monitor the suspect areas for indication of dye. Ensure the air source is turned off and the air pressure is relieved from the pressure box as soon as dyed fuel appears inside the fuel tank. This will prevent excess dye from giving a false indication.

s. Mark the leak source and repair as required.

6.6.10 Double Cup and Dye.

6.6.10.1 General. The double cup assembly is used to transport dyed fuel to the leak exit point. A vacuum is created in the outer cup to hold it against the aircraft structure; the inner cup contains the dyed fuel and is pressurized to force the dyed fuel into the leak path. The fluorescent dye is visible with the aid of an ultraviolet light. (See Figure 6-23.)

6.6.10.2 Required Equipment and Materials. Pressure box, pressure/vacuum integral tank leakage test control panel, leakage tracing device, double cup, pig putty, air strut or shot bags, ultraviolet light, a non-waxed or grease pencil and dyed fuel mixture.

6.6.10.3 Procedures.

a. Prepare aircraft for maintenance in accordance with Paragraph 6.6.5.

b. Mix fluorescent dye one part dye to 10 parts fuel and fill the leakage tracing device reservoir.

c. Connect the double cup assembly to the leakage tracing device. Connect the inner cup to the leakage tracing device reservoir; connect the outer cup to the vacuum source inside the leakage tracing device.

d. Center the double cup assembly over the exact leak exit point.

e. Connect air source to leakage tracing device and regulate the reservoir pressure to four psi. Bleed air from the leakage tracing device reservoir by opening the clamp on the double cup assembly until dyed fuel is ejected; then close the clamp.

f. Check the double cup assembly for leaks; temporarily repair with pig putty as required.

g. Check for dyed fuel vapor ejection from the air ejector. No leakage is permitted. If the inner cup of the double cup is leaking, dyed fuel will be drawn down the outer hose and blown out of the air ejector.

h. Enter the fuel tank and closely monitor the suspect areas for indication of dyed fuel. Ensure the dye pressure source is turned off as soon as dyed fuel appears inside the fuel tank to prevent excess dye from giving a false indication.

i. Continue the procedure as long as required to allow dyed fuel to travel the leak path. Depending on the fuel leak classification, it may take 24 hours or more for the dye to appear inside the fuel tank.

j. Mark the leak source and repair as required.

6.6.11 Hollow Bolt and Dye.

6.6.11.1 General. The hollow bolt is used to locate a leak source by forcing dyed fuel between faying surfaces. The hollow bolt should only be used when the double cup and dye method failed to identify the leak source. The fluorescent dye is visible with the aid of an ultraviolet light. (See Figure 6-23.)

6.6.11.2 Required Equipment and Materials. Leakage tracing device, hollow bolt, air source, pig putty, ultraviolet light, a non-waxed or grease pencil and dyed fuel mixture.

6.6.11.3 Procedures.

a. Prepare aircraft for maintenance in accordance with Paragraph 6.6.5.

b. Mix fluorescent dye one part dye to 10 parts fuel and fill the leakage tracing device reservoir.

CAUTION

Review structural technical data and consult with Fabrication personnel prior to removing fasteners to perform the hollow bolt injection procedure. Failure to do so may result in structural shift/damage.

c. Remove leaking fastener or a fastener near the fuel leak and insert the hollow bolt. If applicable, ensure the holes in the hollow bolt are aligned in the direction of the desired dye flow.

d. Connect the hollow bolt to supply hose from the leakage tracing device reservoir.

e. Connect air source to leakage tracing device and regulate the reservoir pressure to four psi. Bleed air from the hollow bolt by loosening clamp until dyed fuel is ejected; then close clamp.

f. Enter the fuel tank and closely monitor the suspect areas for indication of dyed fuel. Ensure the dye pressure source is turned off as soon as dyed fuel appears inside the fuel tank to prevent excess dye giving a false indication.

g. Continue the procedure as long as required to allow dyed fuel to travel the leak path. Depending on the fuel leak classification, it may take 24 hours or more for the dye to appear inside the fuel tank.

h. Mark the leak source and repair as required.

6.6.12 Vacuum Cup.

6.6.12.1 General. The vacuum cup may be used to confirm a repair or to identify a leak exit point by pulling air, dyed fuel or non-corrosive leak detection compound through the fuel tank structure and into the vacuum cup.

6.6.12.2 Required Equipment and Materials. Leakage tracing device, vacuum cup, air source, non-corrosive leak detection compound or dyed fuel mixture and pig putty.

6.6.12.3 Procedures.

a. Prepare aircraft for maintenance in accordance with Paragraph 6.6.5.

b. Connect vacuum cup hose to vacuum source in the leakage tracing device.

c. Brush non-corrosive leak detection compound on leak exit point/repaired fastener head or build a pig putty dam inside the fuel tank around the suspected leak source or repair area and fill it with dyed fuel.

d. Center vacuum cup over the leak exit point/fastener. Use pig putty, as required, to ensure there are no leaks around the outside of the cup.

e. Connect air source to leakage tracing device and open the leakage tracing device globe valve to create a vacuum inside the cup.

f. Observe transparent site glass on the vacuum cup for evidence of air bubbles or dyed fuel. The appearance of air bubbles or dyed fuel indicates a fuel leak is still present.

g. Continue the procedure as long as required to verify fuel leak repair. If this procedure is being used to find a leak source, depending on the fuel leak classification, it may take 24 hours or more for the dye to travel the leak path and appear in the vacuum cup.

6.6.13 Vacuum Dye Method.

6.6.13.1 General. The vacuum dye method is used to identify a fuel leak source by pulling dyed fuel through the leak path into the fuel tank.

6.6.13.2 Required Equipment and Materials. Pressure/vacuum test integral tank adapter door (with pressure/vacuum relief valves), pressure/vacuum integral tank leakage test control panel, air source, water manometer, caps, plugs, cover plates, ultraviolet light, pig putty, tape, plastic bags, camel hair brush or syringe, dyed fuel mixture and a non-waxed or grease pencil.

6.6.13.3 Procedures.

a. Prepare aircraft for maintenance in accordance with Paragraph 6.6.5.

b. Prepare fuel tank by installing caps, plugs and cover plates, as required, in accordance with the applicable weapons system technical order.

c. Install pressure/vacuum test integral tank adapter door (with pressure/vacuum relief valves) on the aircraft. Ensure globe valve on the door is closed.

d. Ensure gate valve on the pressure/vacuum integral tank leakage test control panel is closed.

e. Connect air source to the pressure/vacuum integral tank leakage test control panel.

f. Connect air hose from the negative pressure port on the pressure/vacuum integral tank leakage test control panel to the pressure/vacuum test integral tank adapter door on the aircraft.

g. Connect manometer hose from the pressure/vacuum test integral tank adapter door on the aircraft to the negative pressure fitting on the water manometer. Ensure the positive pressure fitting on the water manometer is not capped or plugged.

WARNING

Failure to ensure proper manometer fluid levels and applicable caps are removed prior to starting a positive or negative pressure test may cause serious damage to the aircraft or personnel injury/death. Ensure that no portions of the manometer are blocked by any FOD nor deposits. See Chapter 8 for a blockage test. The water manometer shall be inspected prior to starting a positive or negative pressure test to ensure it is serviced to the correct fluid level.

h. Apply 100 psi maximum to the pressure/vacuum integral tank leakage test control panel.

i. Open the gate valve on the pressure/vacuum integral tank leakage test control panel and adjust the regulator until the negative pressure gauge reads four psi. (Less if mandated by specific aircraft technical order procedures.)

CAUTION

To avoid possible structural or sealant damage, always pressurize and relieve pressure slowly, taking at least 15 minutes. Additional pressure will not aid in leak detection.

j. Open the globe valve on the pressure/vacuum test integral tank adapter door on the aircraft and apply four psi maximum negative pressure to the fuel tank in accordance with the applicable weapons system technical order.

k. Mix fluorescent dye one part dye to 10 parts fuel and apply it to the fuel leak exit point using a brush or syringe. Keep the leak exit point wet for approximately 2 hours. The area may need to be kept wet longer for smaller leaks.

(1) For lower surfaces, it may be necessary to tape a bag full of dyed fuel to the surface to keep the area wet.

(2) For upper surfaces, a pig putty dam may be constructed around the leak exit point.

l. Slowly relieve negative pressure and enter the fuel tank and look for indications of dyed fuel. If no indication of dyed fuel exists, exit the fuel tank and reapply negative pressure.

m. Enter the fuel tank and closely monitor the suspect areas for indication of dye.

n. Mark the leak source and repair as required.

6.7 FUEL TANK SEALING METHODS.

Integral fuel tanks must be sealed fuel-tight. The three main areas that require sealing are access doors, fasteners and fuel tank boundaries.

6.7.1 Access Door Types and Sealing Methods.

6.7.1.1 The two basic types of integral fuel tank access doors are plug and direct seal.

a. Plug Door. This access door opens into the fuel tank. The weight of the fuel applies outward or downward pressure on the door; this provides a tight seal against the mating surface. (See Figure 6-6.)

b. Direct Seal Door. This access door opens to the outside of the fuel tank. Fuel pressure against the door increases the load on the access door fasteners. The access door fasteners provide the clamping force to seal the access door against the mating surface. (See Figure 6-7.)

6.7.1.2 All access doors are sealed with a type of static seal. The five types of access door seals are flat gasket, O-ring, molded-in-place, bonded-in-place and formed-in-place.

a. Flat Gasket. This is the oldest method of fuel tank access door sealing. A flat gasket is usually made from thin rubber or cork material. It is simple to local manufacture and install but, may wrinkle easily. The access door screws may require occasional retightening to provide a fuel-tight seal. This type seal requires a flat mating surface. (See Figure 6-8.)

b. O-ring. This seal requires a matching groove machined in the access door and mating surface. Generally, this seal exhibits no leakage and is maintenance-free when properly installed. The disadvantages of this type seal are that it can be hard to install around corners and it is not reusable. (See Figure 6-9.)

c. Molded-In-Place. This seal is molded into the access door during manufacture. It provides a good seal and is reusable. Curing-type sealant may be used to repair minor nicks and cuts in the access door seal but when major defects are noted in the sealing surface, the access door will be replaced.

d. Bonded-In-Place. This is the same type seal as the molded-in-place except a damaged seal can be completely removed from the access door and a new seal can be bonded in its place.

e. Formed-In-Place. This seal is established by applying a curing-type sealant and a parting agent between an access door and mating surface. The door is installed prior to sealant cure. Generally, removal of the access door destroys the seal; therefore, the old sealant must be scraped off, surfaces cleaned and new sealant applied. (See Figure 6-10.)

6.7.2 Fastener Types and Sealing Methods.

6.7.2.1 Fastener Types. There are many different types of fasteners used in fuel tanks; the two major categories are non-self sealing and self-sealing. For more detailed information on structural fuel tank fasteners, refer to the applicable weapons system structural technical order and TO 1-1A-8.

a. Non-self-sealing fasteners are not fuel-tight and must be sealed by another means. Examples of non-self-sealing fasteners are access door screws, bolts and hollow rivets that slip into holes with little or no interference.

b. Self-sealing fasteners swell when installed and may or may not be fuel-tight. Examples of self-sealing fasteners are Jobolts and solid rivets.

6.7.2.2 Fastener Sealing Methods.

a. Non-self-sealing fasteners are usually sealed by one or more of the following methods: dome nuts, sealing washers and O-rings, fastener brush coat, fillet, machine fitting and sealant channel. (See Figure 6-11.)

b. Self-sealing fasteners are usually interference fit. The fasteners are forced or pulled into the holes; the diameter of the hole is slightly smaller than that of the fastener being installed; this causes a very tight fit. Application of a secondary seal may be required.

6.7.3 Fuel Tank Boundary Sealing Methods. Fuel tank boundaries may be sealed using non-curing sealant, curing sealant or structural adhesives. A combination of these sealing methods may be used on the same aircraft and even on the same area of the structure to ensure a fuel-tight tank boundary. Sealants require proper storage, mixing, inspection, and application.

6.7.3.1 Non-Curing Sealant. Non-curing sealant is a one-part sealant that remains in a semi-fluid state. Generally, it is only used on aircraft in areas where access to the internal structure for repair using other types of sealant is difficult or impossible. The sealant contains small beads of material that swell when they come in contact with fuel. The swelling action of the beaded material usually closes off the leak path. Cold weather may negatively affect non-curing sealant by slowing down the rate of swelling; this may cause more aircraft fuel leaks.

6.7.3.1.1 This sealant is introduced into injection ports using a high-pressure injection gun through channels machined into the tank boundary. It is packed between structural members and adheres to the channel to form a fuel-tight seal. Channels may be located between rows, zigzagged within or to one side of fasteners.

6.7.3.1.2 Injection ports are spaced at regular intervals, usually three to six inches apart and are plugged with flush screws. Fuel leaks are repaired by removing the screws from the injection ports on either side of the leak and injecting new sealant. The new sealant will push the old sealant out of the other open port. Heat may need to be applied to the aircraft structure during cold weather to enable the sealant to flow more easily. Refer to Chapter 8 for sealant types and descriptions. (See Figure 6-3 and Figure 6-4.)

6.7.3.2 Curing Sealant. Curing-type sealants normally consist of two parts; a base material and an accelerator. When the two parts are mixed together the new material cures over a period of time, dependent on temperature and humidity level, to a semi-hardened state. It remains flexible enough so it does not crack or break when the aircraft structure flexes. Curing-type sealants may be injected into fittings, channels and corners; pre-packed during initial assembly; applied between faying surfaces; used to overcoat fasteners and small parts; applied as a fillet to seams, butt joints etc.; sprayed over fasteners, butt joints etc., or drawn through fastener/structure voids using vacuum. Fuel tank access is normally required to apply curing-type sealants. Most integral fuel tank leaks are caused by defective curing-type sealant. Fuel leaks are usually repaired by scraping and reapplying the sealant. Refer to Chapter 8 for sealant types and descriptions. (See Figure 6-2.)

6.7.3.3 Structural Adhesive Sealant. Structural adhesive is typically used during the aircraft manufacturing process. This adhesive is used to bond the structure together and seal the faying surfaces. It is cured with heat but remains unusually flexible; as a result, the fasteners carry most of the structural load. Fuel leaks are normally repaired with curing-type sealant fillets or topcoats since major structural disassembly is generally impractical. (See Figure 6-5.)

6.7.3.4 Vacuum Sealant Method.

6.7.3.4.1 General. This method uses curing sealant compound Class A ½, Class B2, Class B ½ and vacuum to repair fuel leaks.

6.7.3.4.2 Equipment and Materials. Pressure/vacuum test integral tank adapter door (with pressure/vacuum relief valves), pressure/vacuum integral tank leakage test control

panel, air source, water manometer, caps, plugs, cover plates, pig putty, tape, plastic bags, camel hair brush or syringe, MEK, sealant, and a non-waxed or grease pencil.

6.7.3.4.3 Procedures.

a. Prepare aircraft for maintenance in accordance with Paragraph 6.6.5.

b. Prepare fuel tank by installing caps, plugs, and cover plates, as required, in accordance with the applicable weapons system technical order.

c. Install pressure/vacuum test integral tank adapter door (with pressure/vacuum relief valves) on the aircraft. Ensure globe valve on the door is closed.

d. Ensure gate valve on the pressure/vacuum integral tank leakage test control panel is closed.

e. Connect air source to the pressure/vacuum integral tank leakage test control panel.

f. Connect air hose from the negative pressure port on the pressure/vacuum integral tank leakage test control panel to the pressure/vacuum test integral tank adapter door on the aircraft.

WARNING

Failure to ensure proper manometer fluid levels and applicable caps are removed prior to starting a positive or negative pressure test may cause serious damage to the aircraft or personnel injury/death. Ensure that no portions of the manometer are blocked by any FOD nor deposits. See Chapter 8 for a blockage test.

g. Connect manometer hose from the pressure/vacuum test integral tank adapter door on the aircraft to the negative pressure fitting on the water manometer. Ensure the positive pressure fitting on the water manometer is not capped or plugged. The water manometer shall be inspected prior to starting a positive or negative pressure test to ensure it is serviced to the correct fluid level.

h. Apply 100 psi maximum to the pressure/vacuum integral tank leakage test control panel.

CAUTION

- Do not exceed 3.75 psi maximum vacuum. To avoid possible wing structure or sealant damage, a negative pressure of 3.75 psi shall not be reached in less than 15 minutes. Gauges and manometer shall be monitored constantly. If vacuum should exceed 3.75 psi, immediately shut off vacuum source and bleed off vacuum slowly from the tank. Check and replace any equipment found to be defective.
- To avoid possible structural or sealant damage, always pressurize and relieve pressure slowly, taking at least 15 minutes. Additional pressure will not aid in sealant flow. If not strictly observed, could result in damage to or destruction of equipment or loss of mission effectiveness.

i. Open the gate valve on the pressure/vacuum integral tank leakage test control panel and adjust the regulator until the negative pressure gauge reads 3.75 psi.

j. Open the globe valve on the pressure/vacuum test integral tank adapter door on the aircraft and apply 3.75 psi maximum negative pressure to the fuel tank in accordance with the applicable weapons system technical order.

k. When the tanks are properly evacuated, close air valve on test door and remove air hose from valve to prevent over evacuation. Build a dam to hold fluid and sealant and to observe flow.

l. Apply MEK to the external surface leak point and observe MEK being drawn through leak point.

m. If required, apply primer to leak point and observe primer being drawn through.

n. Apply sealant to leak point. Keep enough sealant over area as to not allow air to get into leak point. Continue applying sealant to leak point until flow stops.

o. Allow sealant to cure as per manufacturer's instructions prior to fuel leak check.

p. Open air valve on tank test door to relieve vacuum in tank.

q. Remove appropriate fuel tank access doors to gain entrance to fuel tank.

r. Remove tank test door.

6.8 SEALANT HANDLING.

6.8.1 Sealant Storage. Sealants shall be stored in accordance with the manufacturer's instructions.

6.8.1.1 Unmixed sealants shall not be stored above 80 °F. Higher temperatures will reduce allowable storage duration.

6.8.1.2 Some sealants may be pre-mixed, frozen and then stored for use later.

6.8.2 Mixing of Curing-Type Sealants. Sealants shall be mixed in accordance with the manufacturer's instructions or this technical order.

NOTE

Machine mixers that meter sealant components shall be on an inspection calibration schedule.

6.8.2.1 Ensure the accelerator and base material are mixed thoroughly and care is taken to avoid trapping air in the sealant. Trapped air causes small pockets in the sealant; these pockets may develop into leak paths once the sealant is applied and cures.

6.8.2.2 An accurate scale shall be used to mix partial kits to ensure proper proportioning of accelerator and base material.

6.8.2.3 Class A sealants are a thin type sealant that is often used as a brush coat because of its ability to penetrate the structure. It may be hand mixed; large quantities should be machine mixed.

6.8.2.4 Class B sealants are a thicker type sealant used mostly for fillet seals and top coats. They should be machine mixed. Hand mixing is permitted if done in accordance with manufacturer's instructions or this technical order.

6.8.3 Application (Working) Life of Sealants. Application life is the length of time a sealant remains workable for application with a brush or injection/filleting gun. It is based on the standard atmospheric conditions of 70 °F and 50% relative humidity. Application, or working, life will vary as atmospheric conditions change (refer to Table 6-3). Sealants that no longer stick to the surface, start to develop a rope-like consistency or begin to harden during application are either beyond their application life or defective and will be discarded in accordance with local environmental guidance.

6.8.4 Tack-Free Time. Tack-free time is the time required for a sealant to cure to the point where it will not stick to a plastic film (refer to Table 6-3.) Test for a tack-free condition by touching the sealant with a piece of plastic (flat side of a plastic eating utensil, sealant injection nozzle, etc.). If sealant does not transfer to the plastic, it is considered tack-free. Fuel tanks shall not be refueled until the sealant is tack-free.

6.8.5 Sealant Cure. Curing-type sealants will cure over a period of time based on standard atmospheric conditions of 70 °F and 50% relative humidity. Cure time will vary as atmospheric conditions change (refer to Table 6-3). Sealant cure may be accelerated by applying heat, not to exceed 120 °F, to the area or structure.

6.8.5.1 Sealant Cure Acceleration. Tack free time can be reduced using a low temperature, wide spectrum, infrared emitter, known as a RCD. By applying a wide spectrum infrared signal, at a maximum of 120 degrees F, to the area or sealant, B ½ sealant typically cures in less than one hour and B 2 sealant typically cures in approximately 3 hours. These cure times are achievable in any safe-to-do maintenance, ambient temperatures (TO 33D2-3-56-31).

Table 6-1. Estimated Cure Times

CURE TIMES								
Norm. Cond. (73.4 °F; 50% H.R.)					AEROWING (122 °F)			
Material	References	Tack Free	Time	Hardness	Tack Free	Time	Hardness	Testing Lab Center
Sealant	PR-1422 A-1/2 NA	7 h 45	48 h	35 (A)	1 h 15	10 h	35 (A)	CEPr (DGA)
Sealant	PR-1422 A-1/2 NA	7 h 45	48 h	35 (A)	1 h 00	8 h 15	35 (A)	AEROWING
Sealant	PR-1422 A-2	-	96 h	35 (A)	-	9 h	35 (A)	AIRBUS IND.
Sealant	PR-1422 A-2 NA	7 h 40	48 h	35 (A)	1 h 20	12 h	35 (A)	CEPr (DGA)
Sealant	PR-1422 B-1/2 NA	3 h 25	24 h	35 (A)	1 h 10	2 h	35 (A)	CEPr (DGA)
Sealant	PR-1422 B-2	-	20 h	35 (A)	-	5 h	35 (A)	AIRBUS IND.
Sealant	PR-1422 B-2 NA	9 h 35	24 h	35 (A)	0 h 55	1 h	35 (A)	CEPr (DGA)

Table 6-1. Estimated Cure Times - Continued

		CURE TIMES						
Norm. Cond. (73.4 °F; 50% H.R.)					AEROWING (122 °F)			
Material	References	Tack Free	Time	Hardness	Tack Free	Time	Hardness	Testing Lab Center
Sealant	PR-1428 B-1/2	8 h	48 h	30 (A)	1 h 45	2 h 30	30 (A)	AEROWING
Sealant	PR-1436 GA-1/2	10 h	30 h	30 (A)	3 h	10 h	30 (A)	CEPr (DGA)
Sealant	PR-1440 A-1/2	10 h	30 h	35 (A)	1 h	7 h	35 (A)	AEROWING
Sealant	PR-1440 A-2	-	50 h	35 (A)	-	9 h	35 (A)	AIRBUS IND.
Sealant	PR-1440 B-1/2	10 h	45 h	35 (A)	0 h 50	2 h 15	35 (A)	AEROWING
Sealant	PR-1440 B-2	-	72 h	35 (A)	1 h 30	2 h 45	35 (A)	AEROWING
Sealant	PR-1750 B-2	24 h	48 h	35 (A)	3 h	4 h 30	35 (A)	AEROWING
Sealant	PR-1771 B-1/2	6 h	16 h	30 (A)	0 h 45	1 h 45	30 (A)	AEROWING
Sealant	PR-1776 A-2 AS	-	72 h	35 (A)	-	9 h	35 (A)	AIRBUS IND.
Sealant	PR-1776 B-2	8 h	24 h	30 (A)	1 h 15	1 h 40	30 (A)	AEROWING
Sealant	PR-1826 B-1/2	1 h 30	4 h	30 (A)	0 h 20	0 h 35	30 (A)	AEROWING
Sealant	PR-1826 B-2	5 h	10 h	30 (A)	0 h 50	3 h 30	30 (A)	AEROWING
Sealant	PS-870 B-2	24 h	48 h	30 (A)	4 h 00	7 h 15	30 (A)	AEROWING
Sealant	PS-870 C-12	120 h	14 d	30 (A)	12 h	33 h 30	35 (A)	AEROWING
Sealant	PS-875 B-1/2	-	-	-	0 h 15	0 h 40	35 (A)	AEROWING
Sealant	PS-875 B-2	24 h	48 h	35 (A)	4 h 00	11 h 00	35 (A)	AEROWING
Sealant	MC-238 A-2	4 h	12 h	35 (A)	1 h 55	6 h	35 (A)	AEROWING
Sealant	MC-238 B-2	14 h	48 h	35 (A)	1 h 25	5 h	35 (A)	AEROWING
Sealant	MC-630 C-12	-	14 d	30 (A)	12 h	20 h	30 (A)	AEROWING
Sealant	MC-650 B-1	7 h	10 h	35 (A)	2 h	3 h 30	35 (A)	AEROWING
Sealant	MC-770 B-2 Grey	12 h	48 h	30 (A)	1 h 45	3 h 45	30 (A)	AEROWING
Sealant	MC-238 B-1/2	10 h	30 h	35 (A)	0 h 45	1 h 45	35 (A)	AEROWING
Primal Paint	7828 A/NV	-	35 h	200 Persoz	-	1 h 15	200 Persoz	CEPr (DGA)
Primal Paint	7 E 1147	-	46 h	200 Persoz	-	1 h 15	200 Persoz	CEPr (DGA)

Table 6-1. Estimated Cure Times - Continued

		CURE TIMES						
Norm. Cond. (73.4 °F; 50% H.R.)					AEROWING (122 °F)			
Material	References	Tack Free	Time	Hardness	Tack Free	Time	Hardness	Testing Lab Center
Finition Paint	PU66 (+ P99 + PAC33)	-	7 d	240 Persoz	-	05 h 30	240 Persoz	CEPr (DGA)
Finition Paint	CELOGLISS	-	23 h	19 Persoz	-	2 h	19 Persoz	CEPr (DGA)
Finition Paint	MAPCOAT 9020	-	75 h	38 Persoz	-	5 h 30	38 Persoz	CEPr (DGA)
Finition Paint	AEROMAP 1500 M	-	60 h	250 Persoz	-	6 h	250 Persoz	CEPr (DGA)
Varnish	Clear Coat UVR	-	33 h	250 Persoz	-	3 h	250 Persoz	CEPr (DGA)

6.8.6 Sealant Inspection. Sealant shall be visually inspected prior to use to ensure it is properly mixed. Sealant shall not be used beyond its shelf-life unless it has been properly tested.

6.8.6.1 The following paragraphs describe procedures for inspecting curing type sealants. A large quantity is defined as 5 gallons or more of base material, mixed and/or applied to aircraft fuel tanks, in a five-day period. Mixed sealants shall be tested to assure proper quality before being released for production application. This test shall include the following.

6.8.6.1.1 Sampling.

a. Test representative samples from each newly opened container or as requested by the sealant mixing activity.

b. Test one sample from each hand-mixed batch.

c. Test representative samples from each machined-mixed run. (One from first, middle and end of run.)

d. Label each sample with the following information:

(1) Type and class of sealant

(2) Manufacturer

(3) Date of manufacture and lot number

(4) Date mixed

(5) Run number

6.8.6.1.2 Laboratory Testing.

6.8.6.1.2.1 Each sealant run, or portion thereof, will pass all laboratory tests prior to being issued for production use. The following tests should be conducted:

a. Visual inspection of container and contents

b. Application time

c. Tack-free time

d. Curing time

e. Shore A hardness

f. Peel strength (Use two aluminum panels coated with MIL-C-27725 that have been aged in jet reference fluid for seven days at 140 °F.)

6.8.6.1.2.2 An accelerated cure mechanism is acceptable for evaluating laboratory samples provided the cure temperature does not exceed 140 °F, and the relative humidity does not exceed 50%.

6.8.6.1.2.3 Shore A hardness evaluations for laboratory samples should be based on standard curves for hardness versus cure time developed for accelerated cure and for each individual type and class of sealant used.

6.8.6.2 Refer to the applicable requirements specification for application, tack-free and cure time after nine months of storage.

6.8.6.3 Sealant Testing. The following test procedures should be used for MIL-S-8802, MIL-S-83430, MIL-S-81733, AMS 3276, and other sealants, as applicable, prior to updating the shelf-life. Each batch of material should be tested separately. Randomly select one sealant kit per batch for testing and perform a:

6.8.6.3.1 Visual Inspection, All Packaging (Except Two-Component Kits).

a. Visually examine base material and accelerator containers to insure the lid seal has not been broken. Discard both if either seal is broken.

b. Open base material and accelerator containers and check for skinning. If skinning has occurred in either container, discard both.

c. Stir base material and accelerator. They should blend well without lumps or streaks. Discard if there is evidence of streaks or lumps.

6.8.6.3.2 Visual Inspection, Two-Component Kits. Check cartridge for evidence of cracks or loss of material.

6.8.6.3.3 Performance Test.

a. Mix sealant in accordance with the manufacturer's instructions. It should mix easily and show no visible signs of streaks when complete.

b. Apply a bead of sealant approximately one-eighth to one-quarter inch high and three to six inches long to an aluminum panel coated with MIL-C-27725, fuel tank coating. Material should flow well and wet the surface easily. Work the sealant to ensure trapped air is removed. Discard the material if it doesn't flow or wet the surface easily. Record the time and date the sealant was applied.

c. After the rated tack-free time (Paragraph 6.8.4 and Table 6-3), place a piece of polyethylene plastic film into the sealant. Quickly remove the plastic film from the sealant and check for transfer of sealant to the film. If any sealant transfers, discard sealant.

d. After the rated cure time (Paragraph 6.8.5 and Table 6-3), the sealant should be firm but flexible. Push against the sealant with a tongue depressor or other blunt instrument. Sealant should adhere well to the surface and return to its original form; failure to do so is cause for rejection.

6.8.7 Shelf-life Extension. If the sealant passes all tests in Paragraph 6.8.6.3, the shelf-life for that batch may be extended in accordance with AFMAN 23-110 and the SLED. All containers in the batch shall be marked with the new shelf-life date.

6.8.8 Freezing Sealant. Sealant may be frozen and stored using the following procedures:

NOTE

Refer to the manufacturer's instructions to determine if the sealant can be pre-mixed and frozen for later use. Mixing, freezing and thawing sealant reduces total application life.

a. Quick freeze the sealant in a container of dry ice and isobutyl or isopropyl alcohol. Ensure the temperature in the container is maintained at minus 100 °F.

b. Place mixed sealant in a clean, airtight cartridge. Ensure both ends are capped prior to immersing the cartridge.

c. Immerse the sealant cartridge in a container of dry ice, nozzle end first, for 5 minutes to a depth that covers all but one inch of the cartridge.

d. Remove the frozen cartridge from the dry ice and label it with the following information; manufacturer's name/CAGE code, sealant specification, class, application life, date frozen and batch number.

e. Store the cartridge in a freezer. Refer to Table 6-2 for allowable storage duration.

NOTE

Due to their low temperature cure property, PR 1826 and PR 1828 cannot be pre-mixed and frozen.

Table 6-2. Sealant Storage (MIL-S-8802 and MIL-S-83430)

Temperature	Duration (Days)
-20 °F	14
-40 °F	30

6.8.9 Thawing Sealant. Sealant may be quick thawed using the following procedures:

a. Immerse the sealant cartridge in warm water not to exceed 170 °F. Total immersion time should not exceed 15 minutes for Class A2, B2, B6 or Class C sealants.

b. Check cartridge for hot spots by inserting a thermometer into the sealant at the nozzle end of the cartridge. Ensure the temperature of the thawed sealant is between 60 and 95 °F. If the temperature exceeds 95 °F, the sealant cartridge shall be discarded.

c. Mark each cartridge with the time the cartridge was thawed using a stamp, inscription or permanent marker.

Table 6-3. Estimated Tack-Free/Cure Time (Hours)

Estimated Tack-Free/Cure Time (Hours) for A-1/2 and B-1/2 Materials				
Temperature (°F)	35% RH	50% RH	65% RH	90% RH
50	40	35	30	20
55	34	24	19	15
60	30	20	18	12
65	25	18	12	9
70	22	13	9	7
75	19	12	8	4
80	18	9	7	3
85	13	8	5	2
90	12	7	4	2
95	10	5	3	1
100	9	4	2	1
105	8	3	2	
110	7	2	1	
Estimated Tack-Free/Cure Time (Hours) for A-2 and B-2 Materials				
Temperature (°F)	35% RH	50% RH	65% RH	90% RH
50	160	140	120	80
55	135	95	75	60
60	120	80	70	48
65	100	70	45	36
70	85	50	35	28
75	75	45	30	16
80	70	35	25	12
85	50	30	20	10
90	45	25	15	8
95	40	20	10	6
100	35	15	10	4
105	30	10	5	2
110	25	10	5	1

6.9 FUEL LEAK REPAIR.

Permanent repairs are accomplished by removing and replacing defective sealant, replacing or sealing fasteners, replacing or repairing access door/panel seals or replacing components identified during the leak detection procedures outlined in Chapter 4 or this chapter.

6.9.1 Support Equipment. The equipment listed below is typically used during fuel leak repair. Common consumables are listed in Chapter 8, Table 8-1. Safety requirements identified in this technical order shall be followed while using this equipment.

6.9.1.1 Cartridges. Empty cartridges are used when batch mixing large quantities of sealant. The mixed sealant is transferred to these cartridges for use in filleting or injection guns. Cartridges are stock listed with and without plungers. (See Chapter 8.)

6.9.1.2 Gun and Mixing Kit. The kit contains a filleting and injection gun, mixer for cartridges, service wrench for filleting, two and one-half ounce retainer, six ounce retainer for the filleting gun, flexible hose for filleting gun, brush cap cleaner for injection gun, rod cleaner for each size nozzle and two high pressure hose extensions for the injection gun.

6.9.1.2.1 Sealant Mixer. Semco Model 285A is part of the gun and mixing kit and is used to mix sealants. The mixer improves efficiency by reducing the time required to mix a cartridge of sealant. It is also helps reduce waste by ensuring each cartridge is thoroughly mixed. (See Figure 6-25.)

6.9.1.2.2 Filleting Gun Cartridge Retainer. Cartridge retainers are part of the gun and mixing kit and are used to secure the sealant cartridge on the gun. Retainers are available in two sizes, three and one-half ounce and six ounce. The retainer is selected for the size of cartridge to be used.

6.9.1.3 Filleting Nozzles. Filleting nozzles are used with sealant guns and are available in various sizes, shapes and orifice sizes. The nozzle orifice opening size controls the thickness of sealant fillet during application. Standard nozzles may be cut to any angle required. (See Chapter 8.)

6.9.1.4 Injection Nozzles. Injection nozzles are used with sealant injection guns and are available in three sizes; three-sixteenth, one-eighth and three-thirty-second inch orifice.

6.9.1.5 Cartridge Sealant Plunger. There are two types of plungers. The 250P plunger can be used in the cartridge for the filleting gun only. The 250 plunger is equipped with a removable plug that can be used with either the filleting or injection gun.

6.9.1.6 Injection Nozzle Cleaners. The cleaners are used to remove clogged sealant in nozzles. They are stocked in the same size as the orifice for the nozzles.

6.9.1.7 Curing-Type Sealant Gun. The following are approved curing type sealant guns.

a. Semco Model 750

b. Semco Model 850

c. Semco Model 250

6.9.1.8 Non-Curing Type Sealant Guns. The following are approved non-curing type sealant guns.

a. Model 223

b. Model 225

c. Model 227

d. Model 507A

e. Model 509

6.9.1.9 Sealant Scraper. Scrapers are used to remove damaged sealant. Scrapers shall be made of non-spark producing material such as plastic, wood, phenolic or aluminum. (See Chapter 8.)

6.9.1.9.1 Sealant Removal. Manual Desealing System (MDS) and Rapid Desealing System (RDS)

6.9.1.9.2 Manual Desealing System. The MDS is a specific tool especially designed for sealant removal from aircraft structure. The MDS can be used to remove sealant from exterior structure as well as inside the fuel tanks. A medical grade thermoplastic tip is fixed on the handle by a quick fitting. The removal tip type can be selected between several types to allow the choice of cutting angle/shape on the sealant surface. See Chapter 8 Equipment and Materials

6.9.1.9.3 Rapid Desealing System. The Rapid Desealing is a pneumatic hand tool designed to significantly improve the efficiency of removing old/defective sealant from the structure of the aircraft. The RDS will not scratch the structure. It will not scratch the primer paint, underneath the sealant (TO 33D2-3-56-41).

6.9.1.9.4 Powered Sealant Removal Tool. This is a hand held tool that is powered by a shop air and spins about 800 rpm. It is manufactured by Sioux Tools. It employs plastic sealant drill-type cutters manufactured by 3M. Each cut-

ter threads directly on the output spindle of the air-powered drill. Cutters can be purchased in 0.40 or 0.83-inch diameters.

6.9.2 Non-Curing Type Sealant Repair. Repair leaking injection channels by injecting non-curing sealant. If specific injection procedures are not available in the applicable weapons system technical data, the following general procedures may be used.

6.9.2.1 Required Equipment and Materials. High-pressure injection gun and tips, air source and non-curing sealant.

6.9.2.2 Procedures.

a. If required, ensure the aircraft or applicable fuel tank is defueled below the level of the leak exit point.

b. Load the injection gun with non-curing sealant by either hand-packing it or inserting a pre-packed cartridge. If the gun is hand-packed, ensure air pockets are eliminated.

c. Connect air source to the injection gun.

WARNING

A regulated air pressure source shall be used during injection of non-curing sealant. Exceeding the manufacturer's and weapons system technical order's recommended air pressure may cause severe structural damage to the aircraft or personnel injury/death.

d. Apply the recommended air pressure to the injection gun in accordance with the weapons system technical order and manufacturer's recommendation.

e. Refer to the applicable weapons system technical order to determine structural layer and channel layout information.

f. Remove injection port and observation port screws, as required.

NOTE

One damaged injection screw will not prevent adequate sealant injection; however, if two or more consecutive screws are damaged they shall be replaced.

g. If applicable, measure the depth of the injection channel using a depth gauge to determine the correct length of injection tip required.

h. Screw the correct size injection tip into the injection port.

i. Discharge a small amount of sealant from the gun to eliminate any trapped air.

j. Attach injection gun to the injection fitting.

k. Inject sealant until approximately one and a half times the distance between the injection and observation port is extruded. This will ensure that section of the injection channel has been completely filled with fresh sealant.

CAUTION

Do not inject any more than six ounces of non-curing sealant between any two injection points. Use of more than this quantity indicates there is an internal failure of the injection channel. If possible, investigate the cause of the leak and document the leaking channel on the aircraft's AFTO Form 427 or 428.

l. Remove injection gun from the injection fitting.

m. Remove injection fitting and replace the injection port screw.

n. Move to the observation port (now the injection port). If applicable, measure the depth of the injection channel using a depth gauge to determine the correct length of injection tip required.

o. Screw the correct size injection tip into the injection port.

p. Remove another observation port screw approximately six inches away.

q. Continue the process of opening ports, measuring channel depth, injecting and closing ports until the entire leaking channel has been injected.

r. Reinstall all injection/observation port screws.

6.9.3 Curing-Type Sealant Repair. When it comes to permanent repair of fuel leaks, locating and isolating an exact leak path is only half the battle. Proper surface preparation and the application of the correct sealant type is the other.

6.9.3.1 Surface Preparation. Surface preparation requires removal of damaged sealant, repair of structural defects and/or corrosion, application of top coat on exposed

cadmium surfaces and application of adhesion promoter. After the surface has been prepared, the correct sealant should be selected and applied.

6.9.3.1.1 Remove Damaged Sealant. Remove damaged sealant by using the following general procedures.

a. Cover the bottom of the fuel tank near the repair area with a barrier material to protect the fuel tank coating from damage by debris, tools and other foreign materials.

b. Using a scraper, or RDS, in accordance with TO 33D2-3-56-41, or desealant compound, carefully remove defective sealant. (See Chapter 8).

c. After removing a defective fillet seal, cut the ends of the remaining sealant at a 45-degree angle and abrade one-half inch back on both ends to prepare it for application of new sealant.

NOTE

Faying surface, pre-packed or long injection seals cannot be removed without structural disassembly. If necessary, consult with the applicable weapons system ASG for engineering disposition.

6.9.3.1.2 Repair Structural Damage and Corrosion. Structural damage shall be repaired in accordance with the applicable weapons system technical order and TO 1-1A-8. Corrosion shall be removed or treated in accordance with Technical Order 1-1-691 and the applicable weapons system technical order.

6.9.3.1.3 Clean Surface. Clean the surface by using the following general procedures.

a. Apply an authorized cleaning solvent using lint-free cheese cloth or a bristle brush. Do not allow the solvent to dry during the cleaning process.

b. Start the cleaning process from the top of a vertical surface or the top of fasteners down to ensure the area is not re-contaminated. A stiff bristle brush may be used to clean heavy deposits, fasteners, bolts, etc.

c. Wipe the area dry with lint-free cheesecloth and repeat the cleaning process at least one additional time to ensure the area is completely clean. Once clean, do not touch the surface with bare hands; skin oil will contaminate it and the sealant will not completely adhere to the structure.

d. Ensure soiled cleaning supplies and debris are removed from the fuel tank prior to application of top coating, adhesion promoter and new sealant.

6.9.3.1.4 Apply Adhesion Promoter. Apply adhesion promoter by using the following general procedures.

NOTE

To avoid contaminating the adhesion promoter, always pour it on the brush or lint-free cheesecloth. Adhesion promoter should be discarded when it becomes cloudy.

a. Apply a light coat of adhesion promoter to the surface using a fine bristled brush or lint-free cheesecloth. Excess adhesion promoter shall be removed by blotting the surface with lint-free cheesecloth.

b. Allow the adhesion promoter to dry for 30 minutes before applying sealant. If the repair area has been contaminated, or more than 24 hours have elapsed since the adhesion promoter was applied, re-clean the area and reapply adhesion promoter. Adhesion promoter can be applied to the tack-free surface of a brush coat sealant prior to applying a fillet seal.

6.9.3.1.5 Sealant Selection. Select the required sealant specification in accordance with the applicable weapons system technical order. Select the proper sealant class and application life based on the type and complexity of repair.

6.9.3.2 Sealant Application. A combination of seal types may be used to repair a single fuel leak. The five different types of seals used in fuel systems repair are pre-packed, injection, faying surface, brush coat and fillet.

6.9.3.2.1 Application of Pre-packed Seals. Pre-packed seals are applied during fuel tank assembly. Structural areas that will not be readily accessible after assembly are packed with a curing-type sealant. Disassembly may be required to repair leaking pre-packed seals. If disassembly is impractical, the leak can be repaired by applying a brush coat and fillet seal. Refer to Paragraph 6.9.3.2.4 and Paragraph 6.9.3.2.5 for general repair procedures.

6.9.3.2.2 Application of Injection Seals. Injection seals are accomplished by injecting curing- or non-curing-type sealant into holes, channels and/or other voids in fuel tank boundaries. Injection seals are typically repaired by re-injecting the channel or void. Structural disassembly may or may not be required. Refer to the applicable weapons system structural technical order.

6.9.3.2.2.1 Required Equipment and Materials. An authorized cleaning solvent, lint-free cheesecloth, scraper, spatula, stiff bristle brush, injection gun, injection nozzle, air source, camel hair brush and sealant.

6.9.3.2.2.2 Procedures.

a. If applicable, prepare surfaces in accordance with Paragraph 6.9.3.1.

b. Mix curing-type sealant cartridge and insert it into the filleting gun.

c. Screw the correct size injection nozzle into the end of the injection gun. For closed voids, ensure the nozzle length is long enough to reach the depth the depth of the channel.

d. Connect air source to injection gun and regulate air pressure in accordance with the manufacture's instructions.

e. Inject the void with sealant, as required.

(1) For an open void, slowly inject sealant until it extrudes from the opposite end and then slowly remove injection gun to avoid causing a void in the sealant.

(2) For closed voids, insert the nozzle as far into the void as possible and slowly pull the nozzle back while simultaneously injecting sealant. Pulling the nozzle back too quickly will cause voids and trapped air in the sealant.

6.9.3.2.3 Application of Faying Surface Seal. Faying surface seals are normally applied between mating surfaces during aircraft manufacturing to prevent corrosion and/or to prevent fuel from leaking through the mating surfaces. Structural disassembly may be required to repair faying surface seals. Refer to the applicable weapons system structural technical order. If disassembly is impractical, the leak can be repaired by applying a brush coat and fillet seal. Refer to Paragraph 6.9.3.2.4 and Paragraph 6.9.3.2.5 for general repair procedures.

6.9.3.2.3.1 Required Equipment and Materials. An authorized cleaning solvent, lint-free cheesecloth, scraper, spatula, stiff bristle brush, filleting gun, injection nozzle, air source, camel hair brush and sealant.

6.9.3.2.3.2 Procedures.

a. Prepare surfaces in accordance with Paragraph 6.9.3.1.

b. Mix curing-type sealant cartridge and insert it into the filleting gun.

c. Screw the correct size injection nozzle into sealant cartridge. Ensure the nozzle tip is large enough to enable application of a bead of sealant sufficient to cover the whole surface and allow some sealant to squeeze out when the parts are assembled.

d. Connect air source to filleting gun and regulate air pressure in accordance with the manufacture's instructions.

e. Apply sealant to faying surfaces. Ensure it is spread evenly over the entire surface.

f. Assemble part and clamp together with setup bolts, wind-type Cleco, or other temporary fasteners.

g. Install fasteners and torque in accordance with applicable weapons system technical order. Final torque shall be applied before the sealant reaches the end of its application life.

h. Remove excess extruded sealant as required.

6.9.3.2.4 Application of Brush Coat Seal. A thin brush coat of a Class A curing-type sealant shall be applied prior to application of a fillet seal. It will be applies 0.10 inch wider that the expected size of the final fillet on either side of the seam. Brush coats shall not be used over any primary seal. Brush coats are normally repaired by removing the old sealant and applying new sealant.

6.9.3.2.4.1 Required Equipment and Materials. An authorized cleaning solvent, lint-free cheesecloth, scraper, spatula, stiff bristle brush, filleting gun, injection nozzle, air source, camel hair brush and sealant.

6.9.3.2.4.2 Procedures.

a. Prepare surface in accordance with Paragraph 6.9.3.1.

b. Apply a Class A curing-type sealant on top of the adhesion promoter using a camel hair brush. Work the sealant into and around crevices, holes, seams, fasteners, and on surfaces to be sealed.

c. Allow the surface to become tack-free before application of the fillet seal.

6.9.3.2.5 Application of Fillet Seal. Fillet seals are typically applied over brush coats and along the edges of faying surfaces. Defective fillet seals are normally repaired by removing the old fillet and replacing with a new one.

6.9.3.2.5.1 Required Equipment and Materials. An authorized cleaning solvent, lint-free cheesecloth, scraper, spatula, stiff bristle brush, filleting gun, injection nozzle, air source, camel hair brush and sealant.

6.9.3.2.5.2 Procedures.

a. Prepare surfaces in accordance with Paragraph 6.9.3.1.

b. Ensure a brush coat has been applied in accordance with Paragraph 6.9.3.2.4 and ensure it is tack-free in accordance with Paragraph 6.8.5 before continuing.

c. Mix curing-type sealant cartridge and insert it into the filleting gun.

d. Screw the correct size injection nozzle into the sealant cartridge (e.g., small orifice for a small fillet; large orifice for a large fillet). To help determine the correct orifice size, it may be necessary to set up a locally-fabricated device to simulate the components to be filleted.

e. Connect air source to filleting gun and regulate air pressure in accordance with the manufacture's instructions.

f. Unless otherwise specified in the weapons system technical order, apply a fillet seal as outlined below. For repair of long stretches of structure, apply the sealant in approximately three-foot lengths.

g. For small fillets (a half inch thick or less), skip to step i.

h. For large fillets (greater than a-half inch thick), apply a small bead of sealant and work into all voids to remove trapped air. Examine the sealant for air bubbles after it is tack-free. If required, enlarge air bubble cavities to permit easy filling during step i.

i. Apply final fillet and shape to conform to the dimensions shown in Figure 6-30 or as required in the applicable weapons system technical order. Examine the sealant for air bubbles after it is tack-free. Repair any air pockets found by enlarging the cavities and filling them with sealant.

6.9.3.2.6 Repair of Chalking Sealant. As sealant ages, it may develop areas of chalking. Chalking appears as a light colored powdery area on the sealant. Repair chalking sealant by using the following general procedures.

6.9.3.2.6.1 Required Equipment and Materials. An authorized cleaning solvent, lint-free cheesecloth and a stiff bristle brush.

6.9.3.2.6.2 Procedures.

a. Scrub chalky area vigorously with a dry stiff bristle brush. Hold a vacuum cleaner hose near the area to pick up chalk dust.

b. Clean the sealant using an authorized cleaning solvent and lint-free cheesecloth.

c. Dry off the sealant with a clean piece of lint-free cheesecloth.

6.9.4 Fastener Repair. Fasteners used in integral tanks are sealed in a variety of ways. A combination of sealing methods may be used on any single or group of fasteners. Ensure fasteners are torqued to the proper specification in accordance with the applicable weapons system technical order prior to sealant application.

6.9.4.1 Self-Sealing Fasteners. Replace self-sealing fasteners in accordance with TO 1-1A-8 or repair by applying a brush coat. (See Paragraph 6.9.3.2.4.)

6.9.4.2 Fasteners Located in Sealant Channels. Repair by injecting the channel nearest the leaking fastener with non-curing sealant. (See Paragraph 6.9.2.)

6.9.4.3 Fasteners Sealed with Dome Nuts. Replace dome nuts in accordance with TO 1-1A-8 or repair by applying a brush coat. (See Paragraph 6.9.3.2.4.)

6.9.4.4 Fasteners Sealed with Sealing Washers or O-Rings. Replace fastener in accordance with TO 1-1A-8 or replace the leaking seal washer or O-ring by using the following general procedures.

a. Remove the fastener and inspect the O-ring/sealing washer for serviceability. Replace the defective O-ring/washer as required.

b. Reinstall the fastener and torque in accordance with the applicable weapons system technical order.

c. If the leak continues, replace the fastener.

6.9.4.5 Fasteners Sealed by Brush-Coat and Fillet. Replace fastener in accordance with TO 1-1A-8 or repair by applying a brush-coat and fillet using the following general procedures.

6.9.4.5.1 Required Equipment and Materials. An authorized cleaning solvent, lint-free cheesecloth, scraper, spatula, stiff bristle brush, filleting gun, injection nozzle, air source, camel hair brush and sealant.

6.9.4.5.2 Procedures.

a. Prepare surfaces in accordance with Paragraph 6.9.3.1.

b. Apply brush coat in accordance with Paragraph 6.9.3.2.4.

c. Apply fillet in accordance with Paragraph 6.9.3.2.5.

6.9.4.6 Wet Installed Fasteners. Repair wet installed fasteners by using the following procedures. The aircraft may not need to be defueled for this procedure.

6.9.4.6.1 Required Equipment and Materials. An authorized cleaning solvent, lint-free cheesecloth, scraper, stiff bristle brush, camel hair brush and sealant.

6.9.4.6.2 Procedures.

a. Clean the hole and surrounding area with authorized cleaning solvent and lint-free cheesecloth. A non-tipped swab may be used to clean inside small holes.

b. Clean fastener with an authorized cleaning solvent and a stiff bristle brush.

c. Apply adhesion promoter to fastener and walls of the hole.

d. Apply a small bead of curing-type sealant around the shoulder of the fastener. Avoid getting sealant on the fastener threads.

e. Install fastener and torque in accordance with the applicable weapons system technical order. Final torque shall be applied before sealant reaches the end of its application life.

6.9.4.7 Access Door/Panel Fastener Leak Repair. Repair leaking access door/panel fasteners using the following general procedures.

6.9.4.7.1 Required Equipment and Materials. An authorized cleaning solvent, lint-free cheesecloth, scraper, spatula, stiff bristle brush, filleting gun, injection nozzle, air source, camel hair brush, sealant.

6.9.4.7.2 Procedures.

a. Torque fastener in accordance with applicable weapons system technical order. If the fuel leak continues, the fastener and access door/panel may need to be removed to investigate the cause of the fuel leak.

b. If required, prepare aircraft for maintenance in accordance with the applicable weapons system technical order.

c. Ensure compliance with applicable precautions and procedures in this technical order.

d. Ensure the leaking fastener has been identified and marked.

e. Ensure aircraft or applicable fuel tank(s) is/are defueled in accordance with the weapons system technical order.

f. Remove and inspect the access door/panel and fastener. Repair or replace as required.

g. Clean fastener and hole.

h. If applicable, apply a bead of curing sealant to fastener shank.

i. Install fastener and torque in accordance with applicable weapons system technical order. Final torque shall be applied before the sealant reaches the end of its application life.

6.9.5 Access Door/Panel Seal Replacement. Replace compression type seals such as flat gaskets, O-rings, or bonded-in-place seals on access doors or panels by using the following general procedures.

6.9.5.1 Required Equipment and Materials. An authorized cleaning solvent, lint-free cheesecloth, scraper, spatula, stiff bristle brush, camel hair brush and adhesive or sealant.

6.9.5.2 Procedures.

a. If required, prepare aircraft for maintenance in accordance with the applicable weapons system technical order.

b. Ensure compliance with applicable precautions and procedures in this technical order.

c. Ensure the leaking access door/panel has been identified and marked.

d. If applicable, ensure aircraft or applicable fuel tank(s) is/are defueled in accordance with the weapons system technical order.

e. If applicable, ensure applicable fuel tank(s) is/are drained in accordance with the weapons system technical order.

f. Remove the leaking access door/panel.

g. Ensure applicable fuel tank(s) is/are purged/ventilated in accordance with the Chapter 5.

h. Carefully remove seal from door/panel taking care not to damage the access door/panel.

i. Clean sealing surface of door/panel.

j. Replace seal using proper adhesive or sealant.

k. Install access door/panel and torque fasteners in accordance with the applicable weapons system technical order.

6.9.6 Using Desealant, Specification MIL-D-9063.

a. Soak small items, or items that have no moving parts, glass, plastic or rubber in a container of desealant for 10 minutes. Items that cannot be soaked, or that have moving parts, shall have the desealant applied with a brush or damp cloth.

b. Rinse the non-moving parts in clear water.

c. Wipe parts with an authorized cleaning solvent.

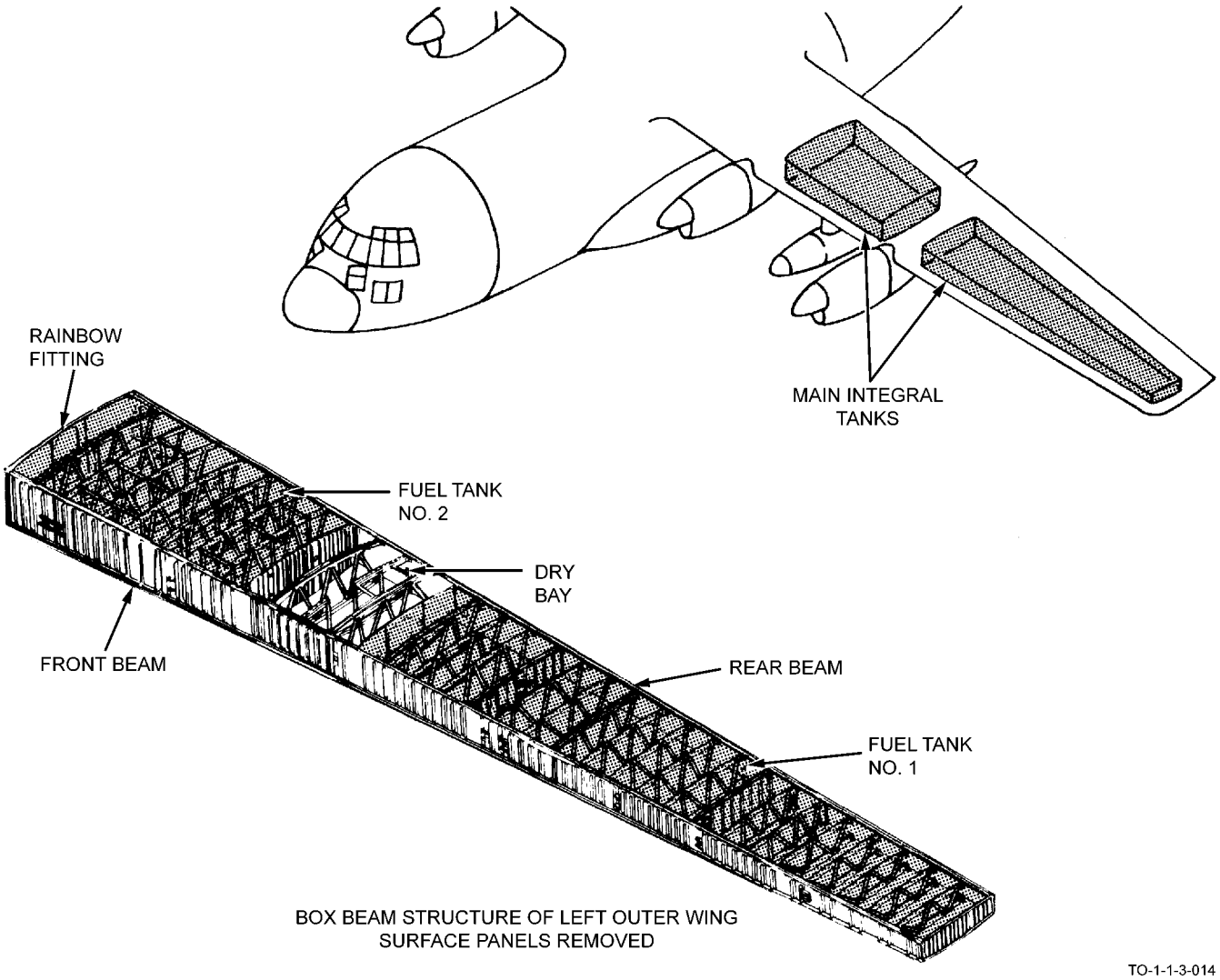

Figure 6-1. Typical Integral Fuel Tanks

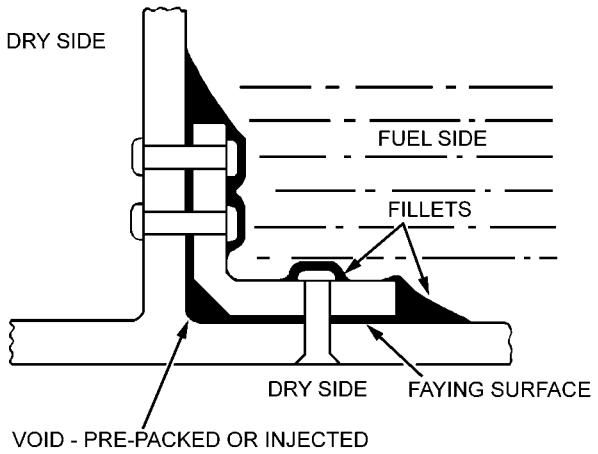

TO-1-1-3-015

Figure 6-2. Curing Sealant Design

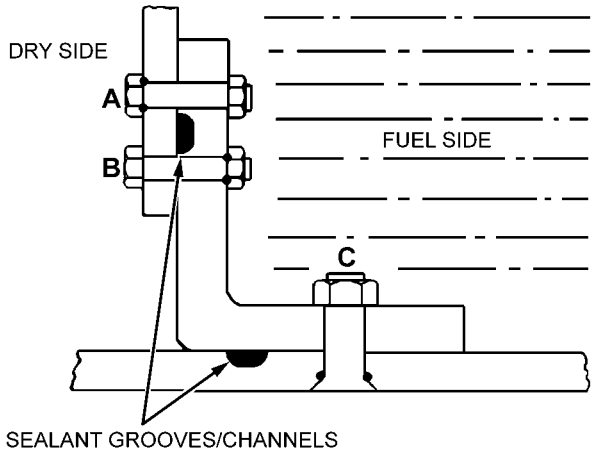

NOTE:
FASTENER A MAY BE SEALED ON EITHER END. FASTENER B MUST BE SEALED ON NUT END AND FASTENER C MUST BE SEALED IN THE COUNTERSINK.

TO-1-1-3-016

Figure 6-3. Non-Curing Sealant Design

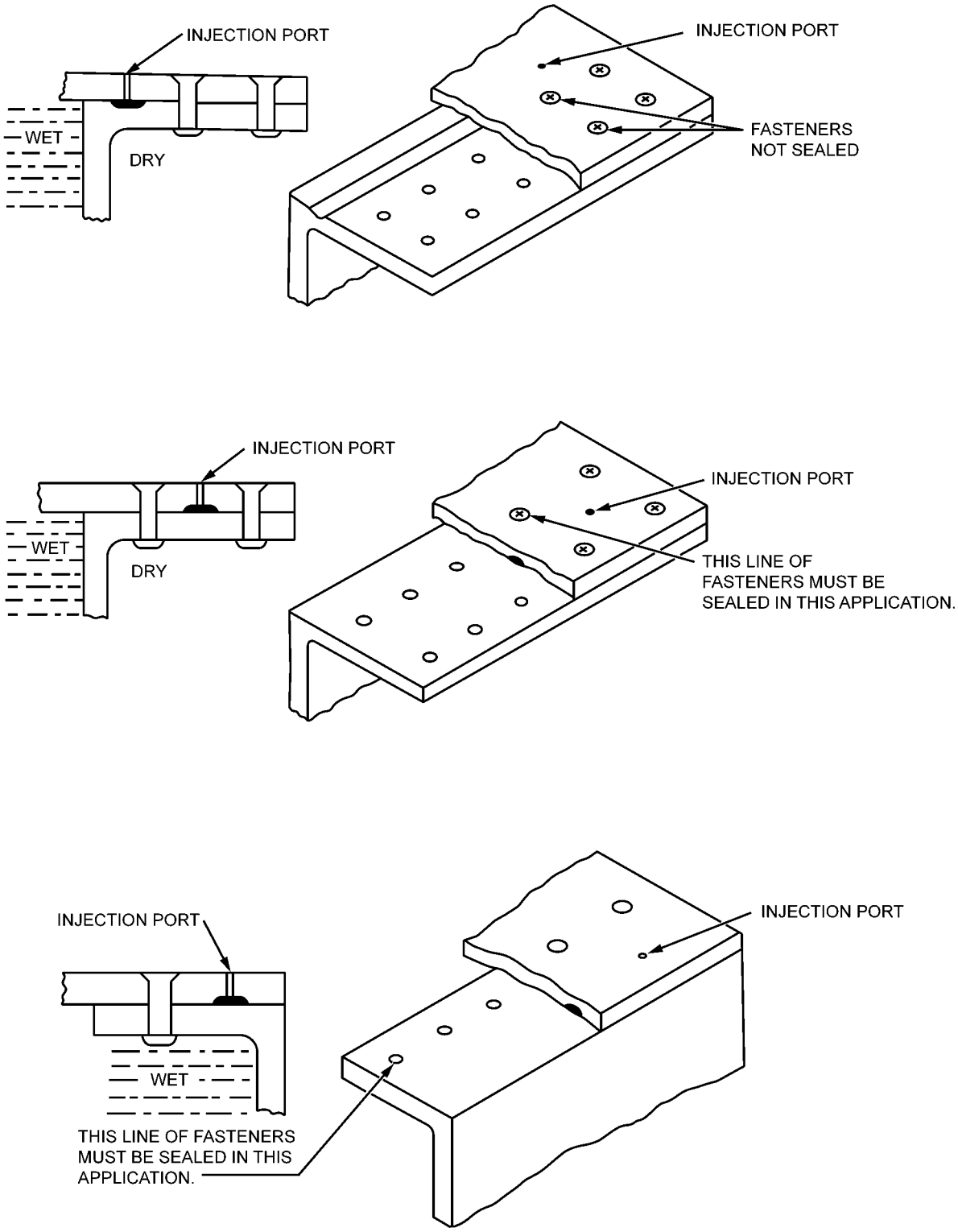

TO-1-1-3-017

Figure 6-4. Typical Locations of Grooves/Channels (Sheet 1 of 2)

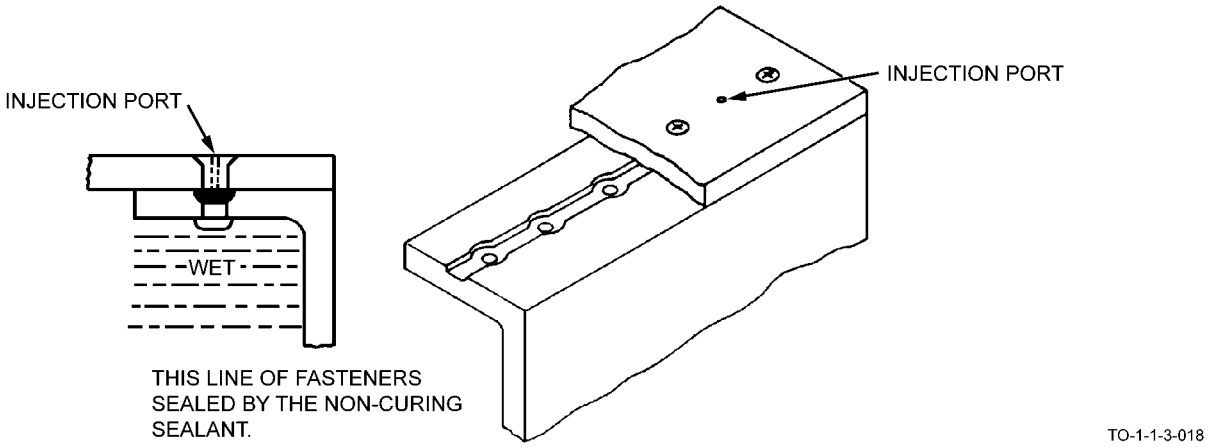

Figure 6-4. Typical Locations of Grooves/Channels (Sheet 2)

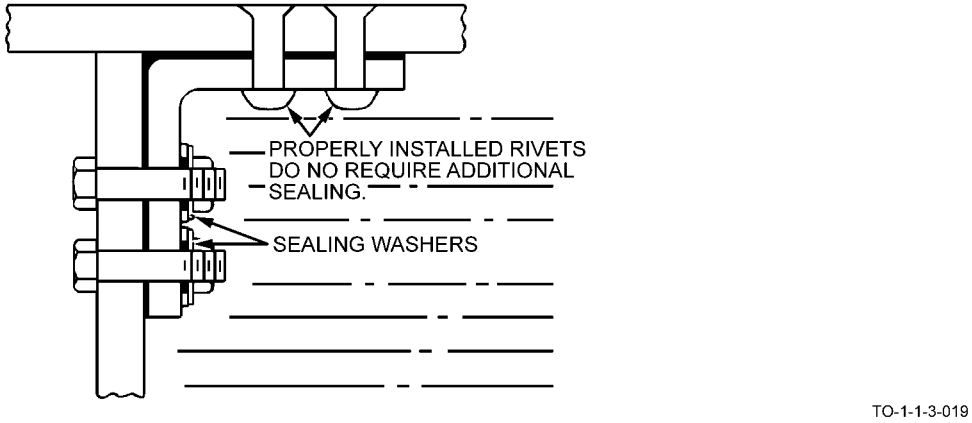

Figure 6-5. Structural Adhesive Sealing

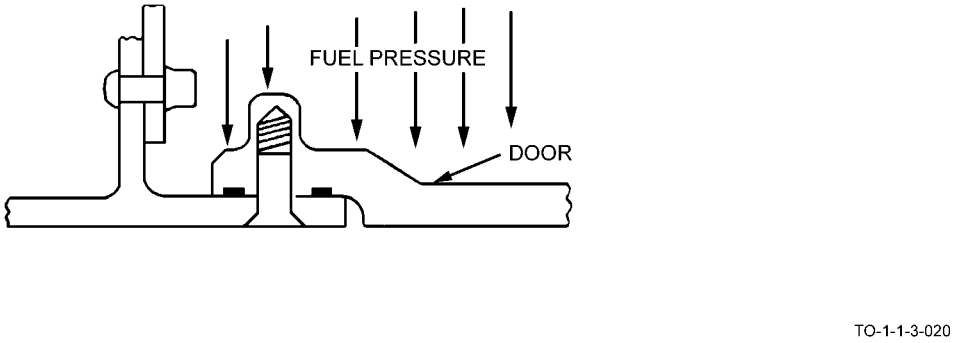

Figure 6-6. Plug Door

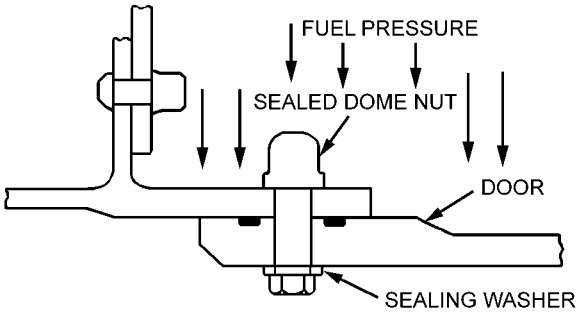

TO-1-1-3-021

Figure 6-7. Direct Seal Door

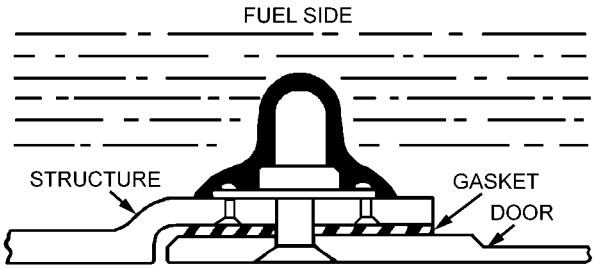

TO-1-1-3-022

Figure 6-8. Flat Gasket Seal

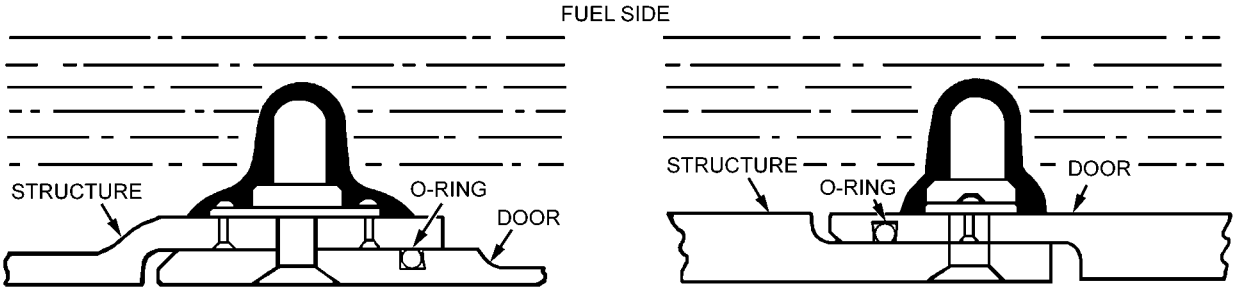

TO-1-1-3-023

Figure 6-9. O-Ring Seal

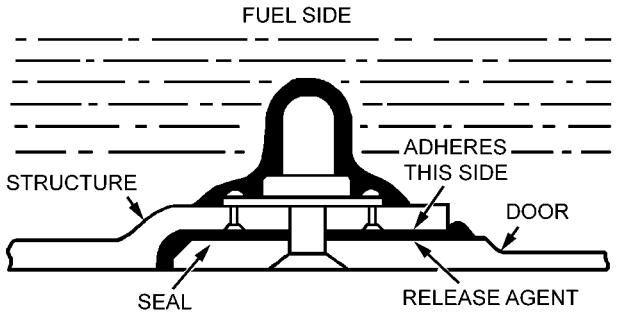

TO-1-1-3-024

Figure 6-10. Formed-In-Place Seal

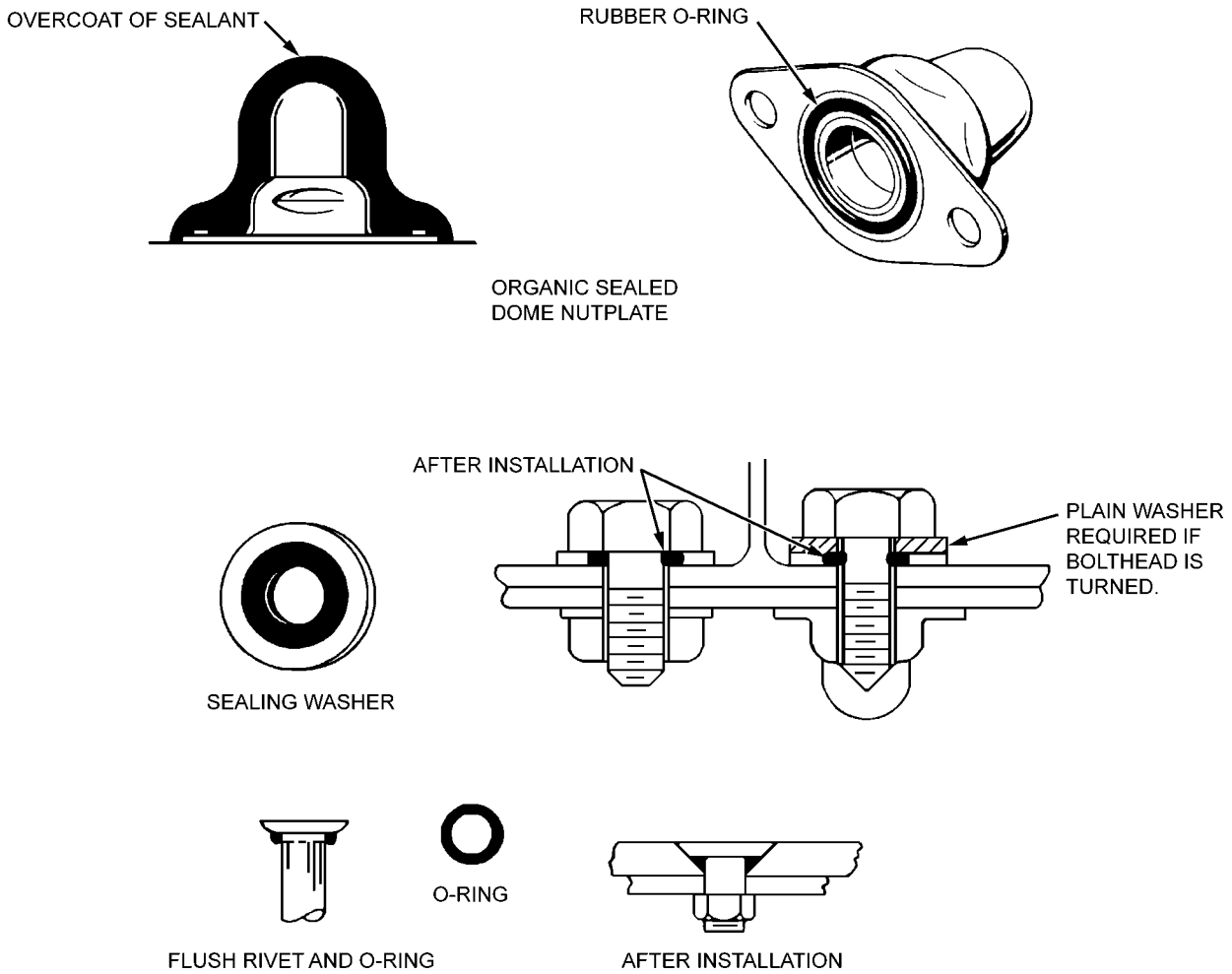

TO-1-1-3-025

Figure 6-11. Typical Fastener Seal

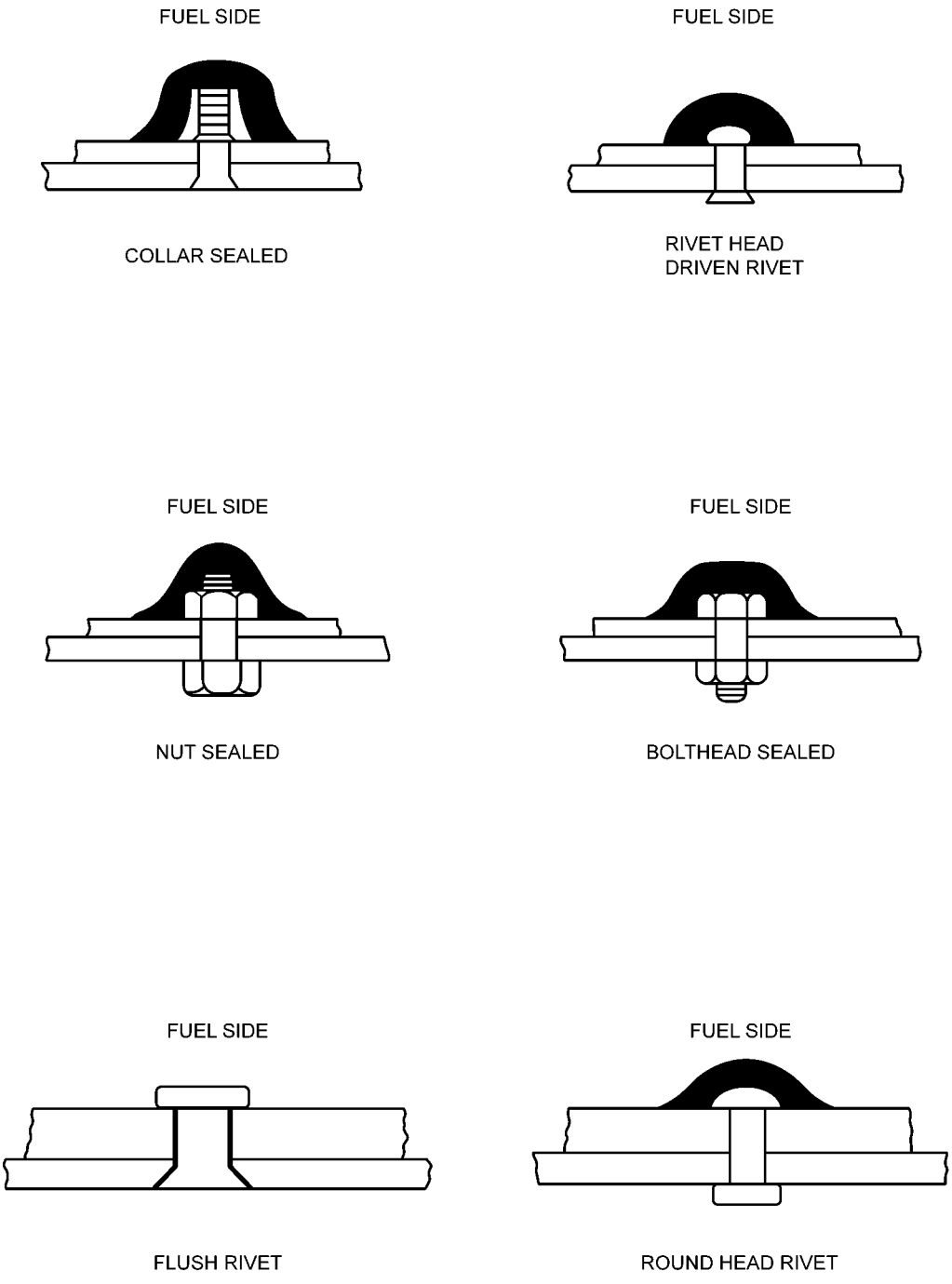

TO-1-1-3-026

Figure 6-12. Typical Fasteners, Overcoat and Fillet

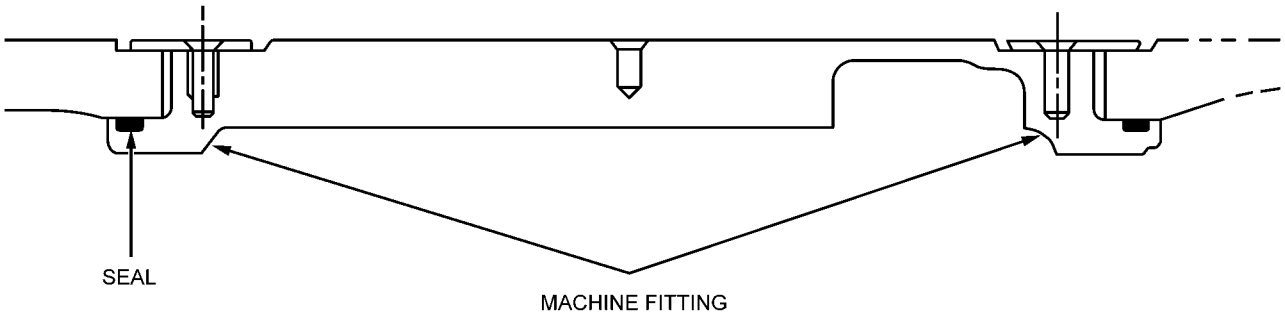

TO-1-1-3-027

Figure 6-13. Machine Fitted Plug-Type Access Door for Attaching Screws

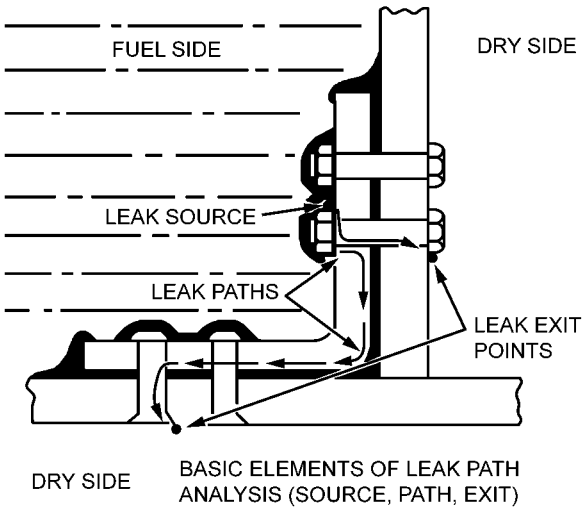

TO-1-1-3-028

Figure 6-14. Leak Path Analysis

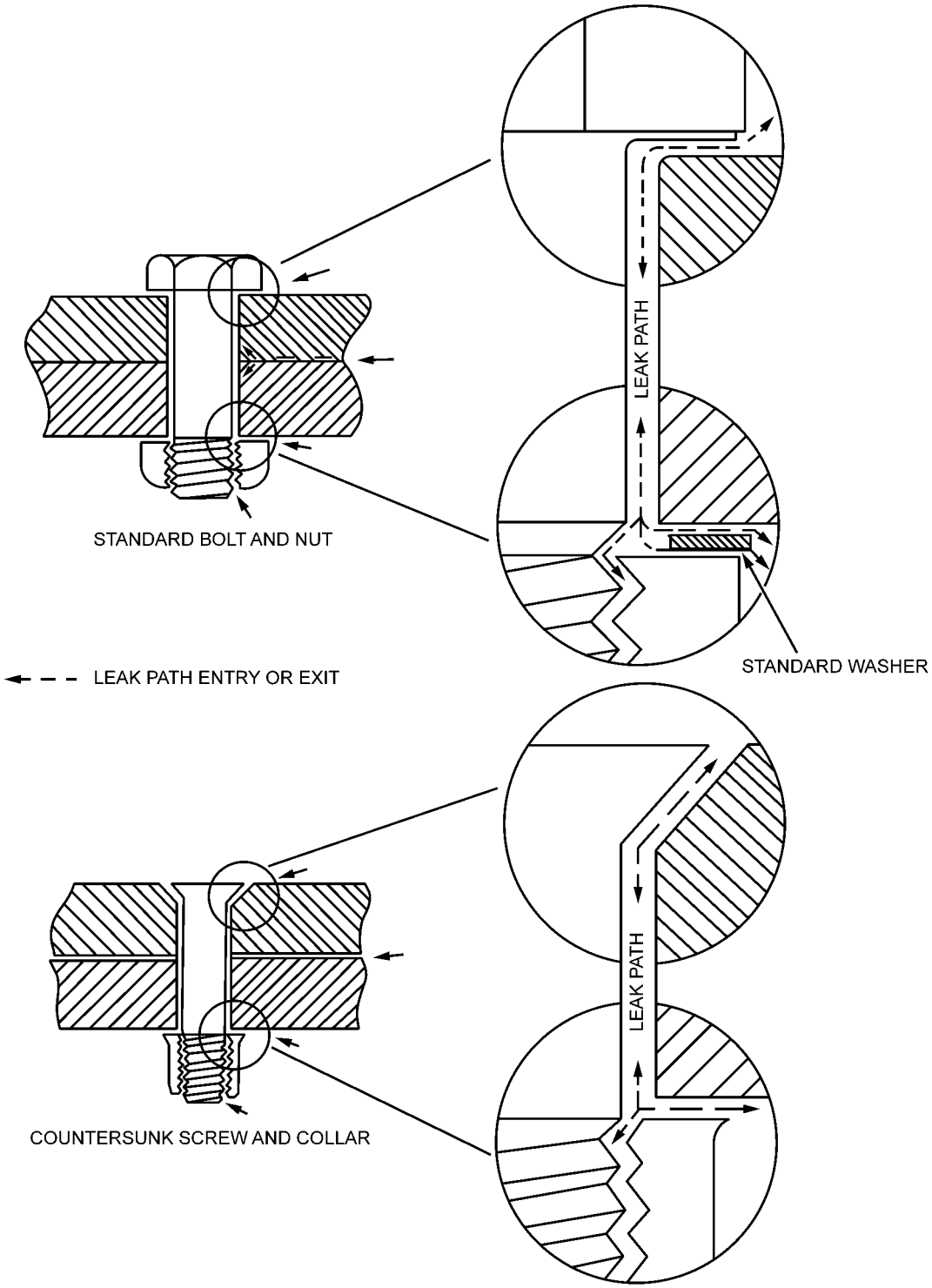

TO-1-1-3-029

Figure 6-15. Fasteners Leaks

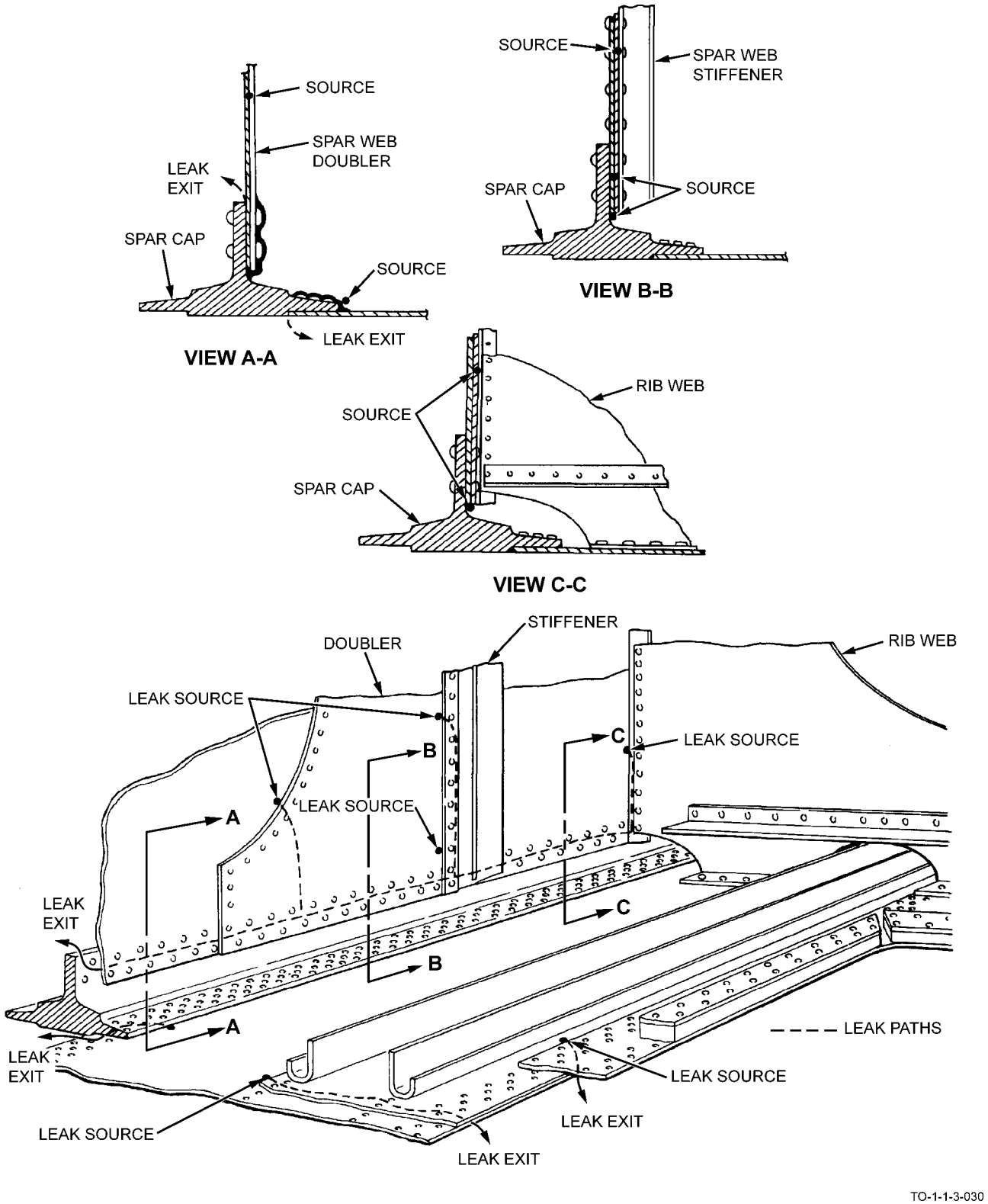

Figure 6-16. Examples of Long Leak Paths

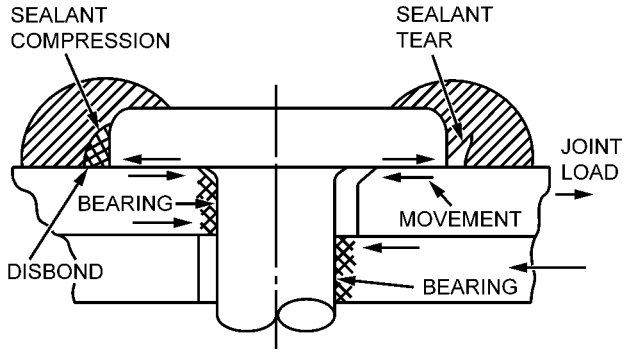

TO-1-1-3-031

Figure 6-17. Fastener Movement on Oversize Hole

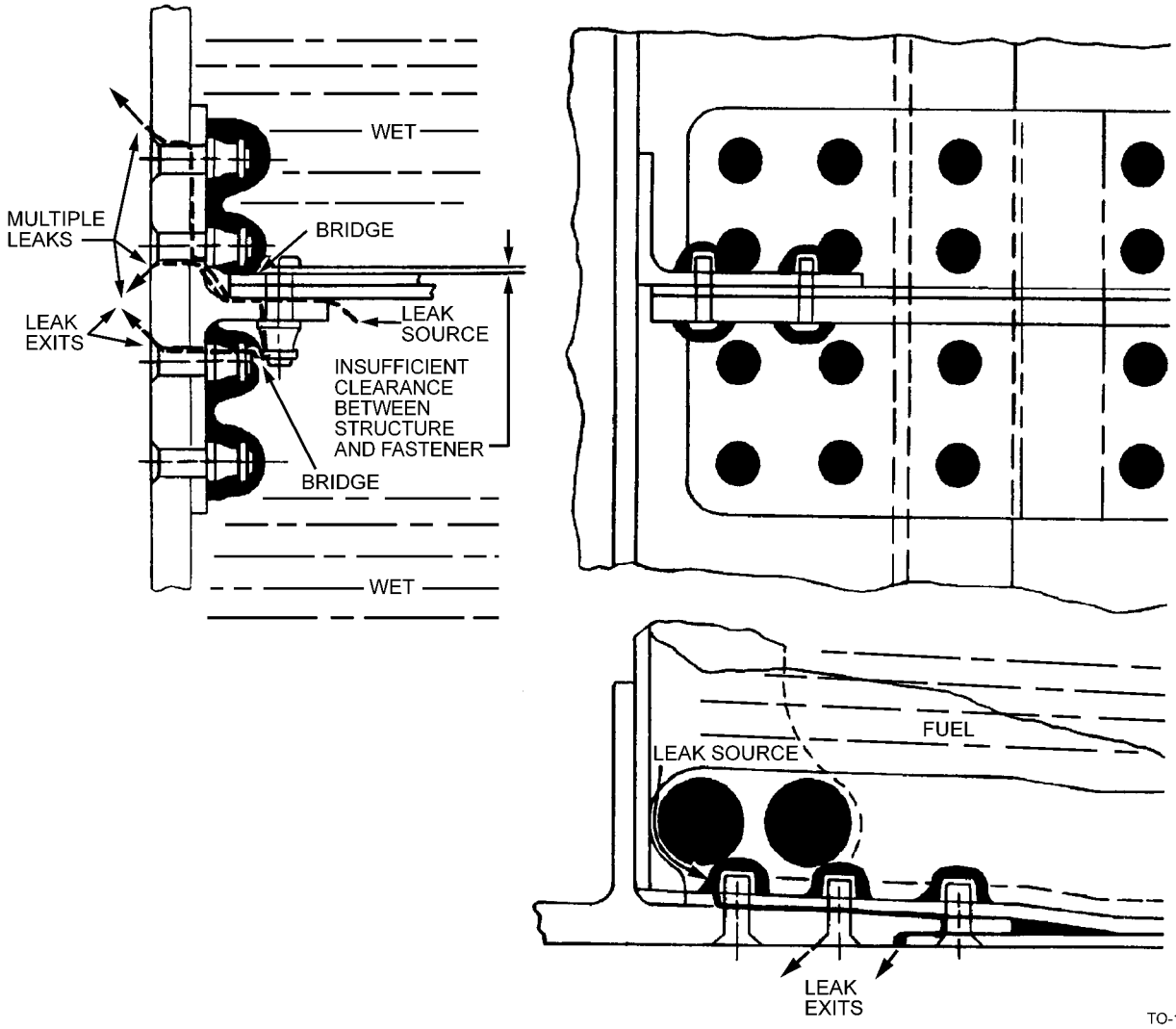

TO-1-1-3-032

Figure 6-18. Multiple Leak Paths from a Single Leak Source

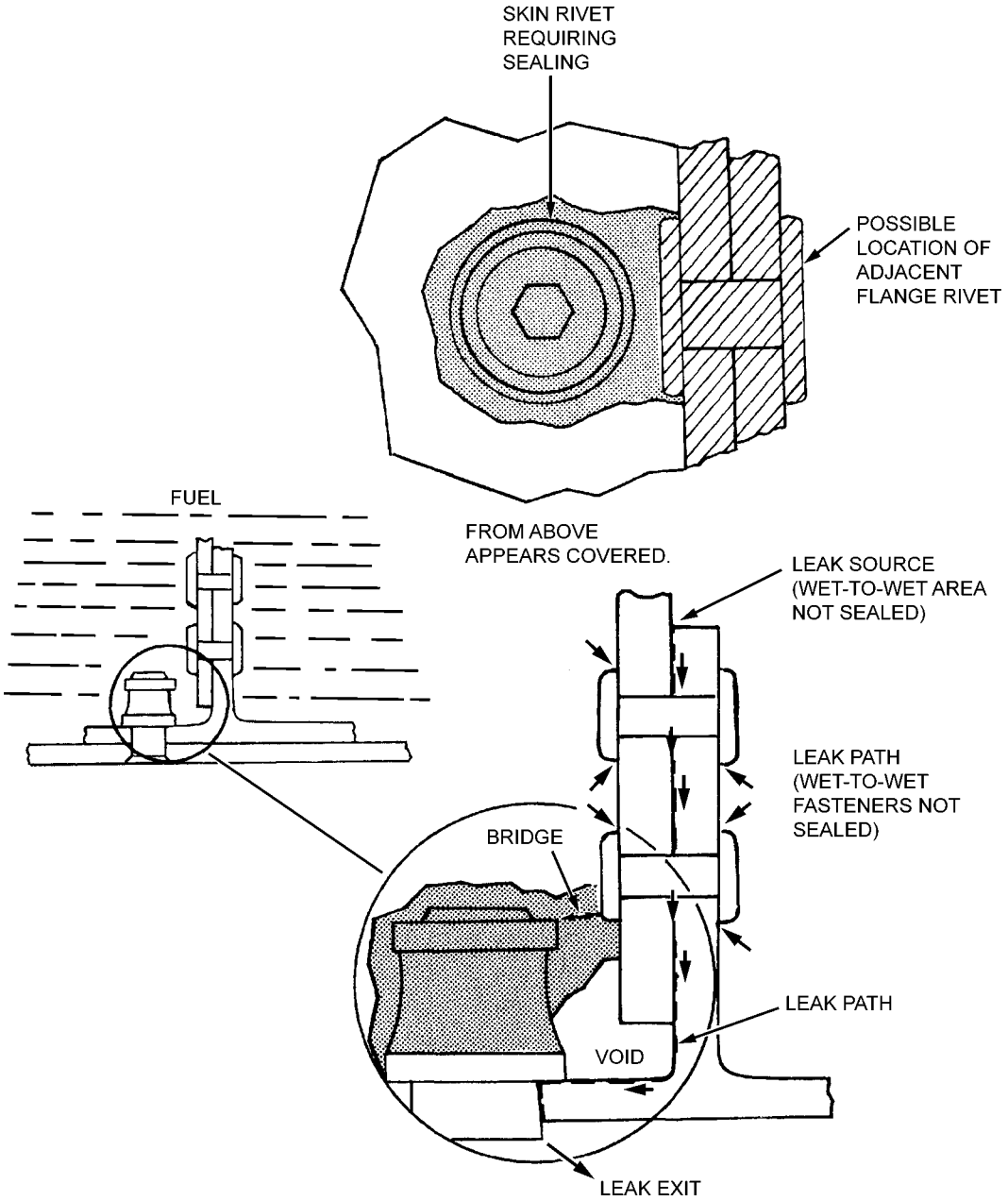

NOTE:
SOME LEAK PATHS CAN BE CREATED THAT ARE ALMOST IMPOSSIBLE TO FIND AND SEAL, SUCH AS THE CREATION OF BRIDGES BETWEEN CLOSELY POSITIONED FASTENERS.

TO-1-1-3-033

Figure 6-19. Sealant Bridging

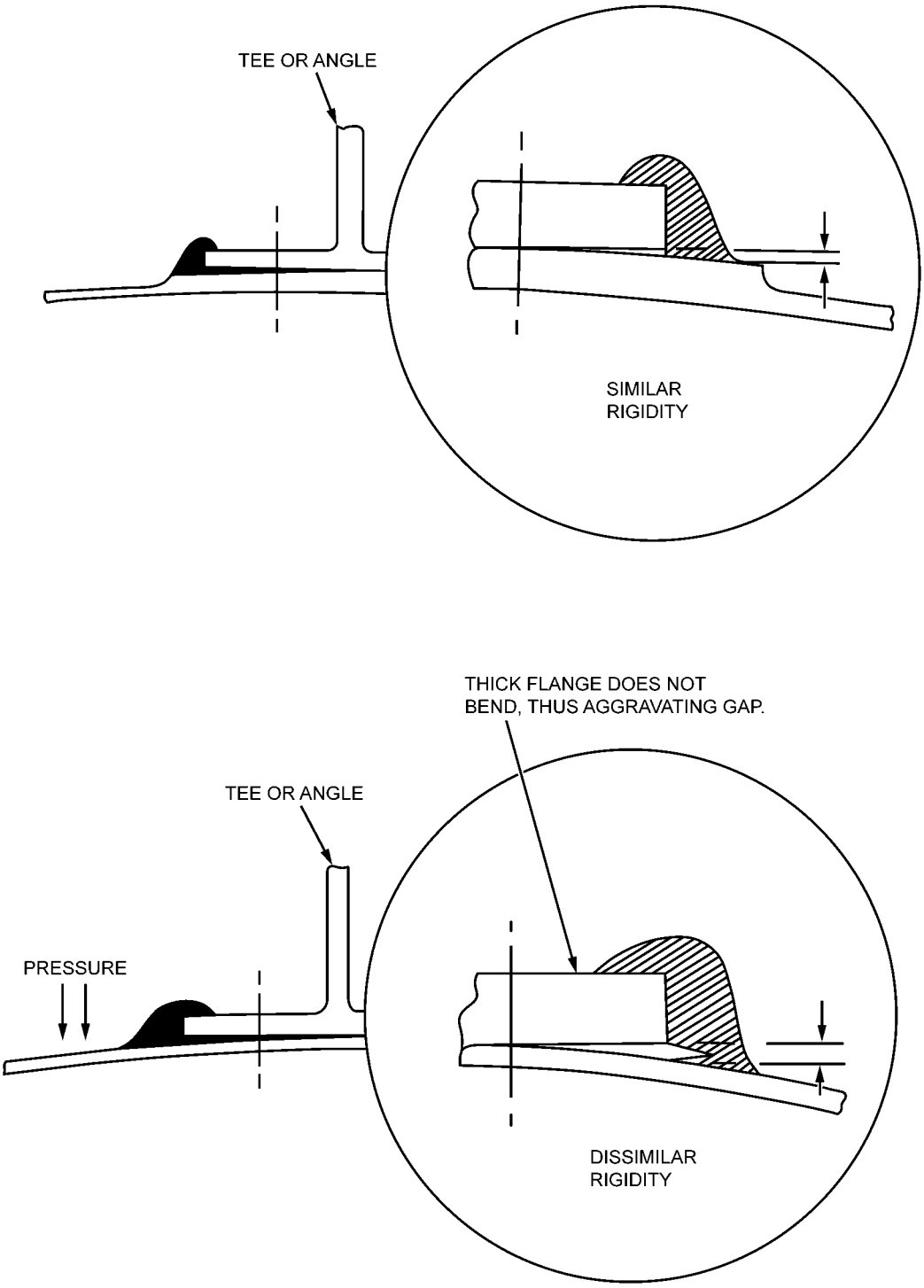

Figure 6-20. Fillet Seal Deflection

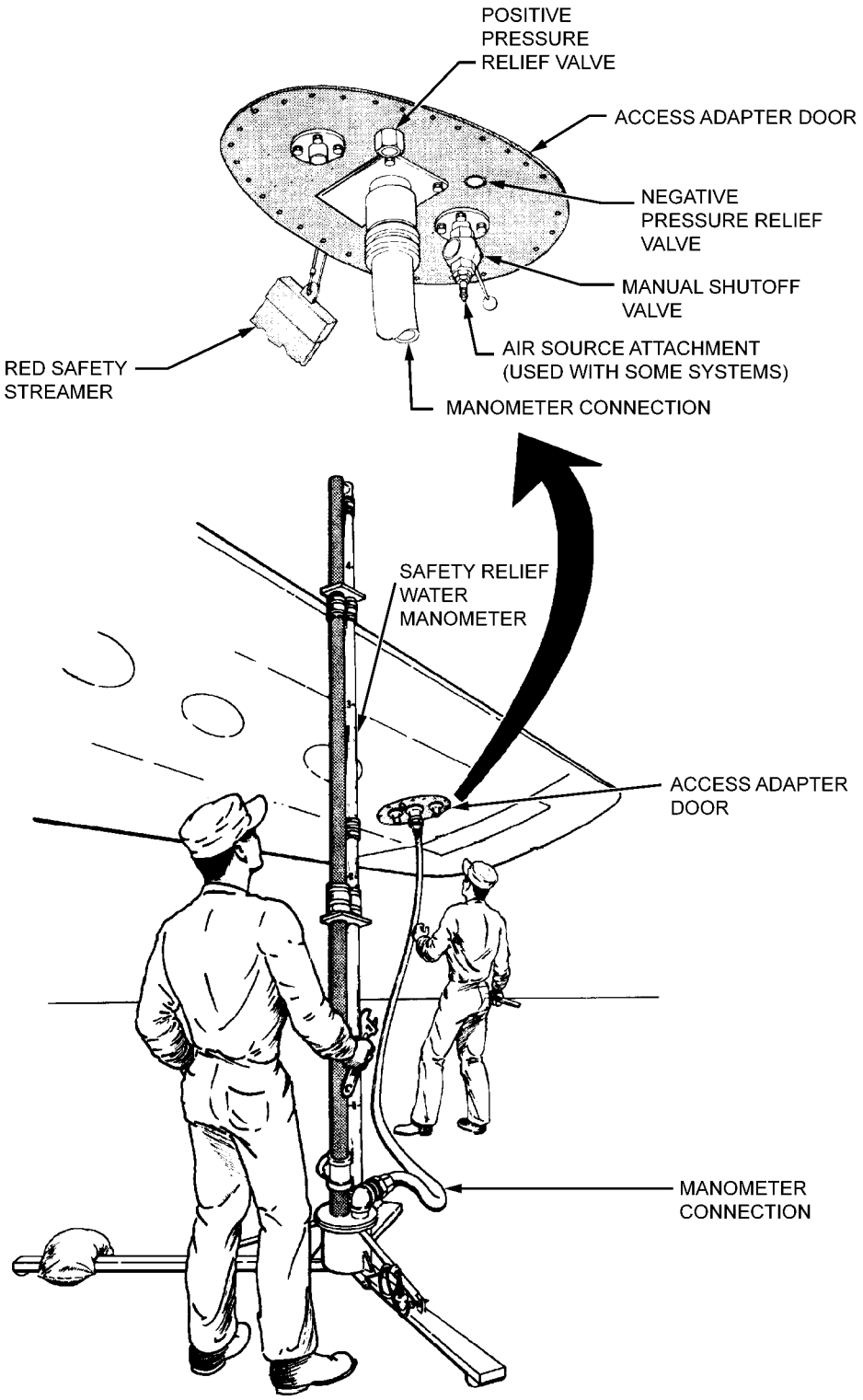

TO-1-1-3-035

Figure 6-21. Pressure Test Method

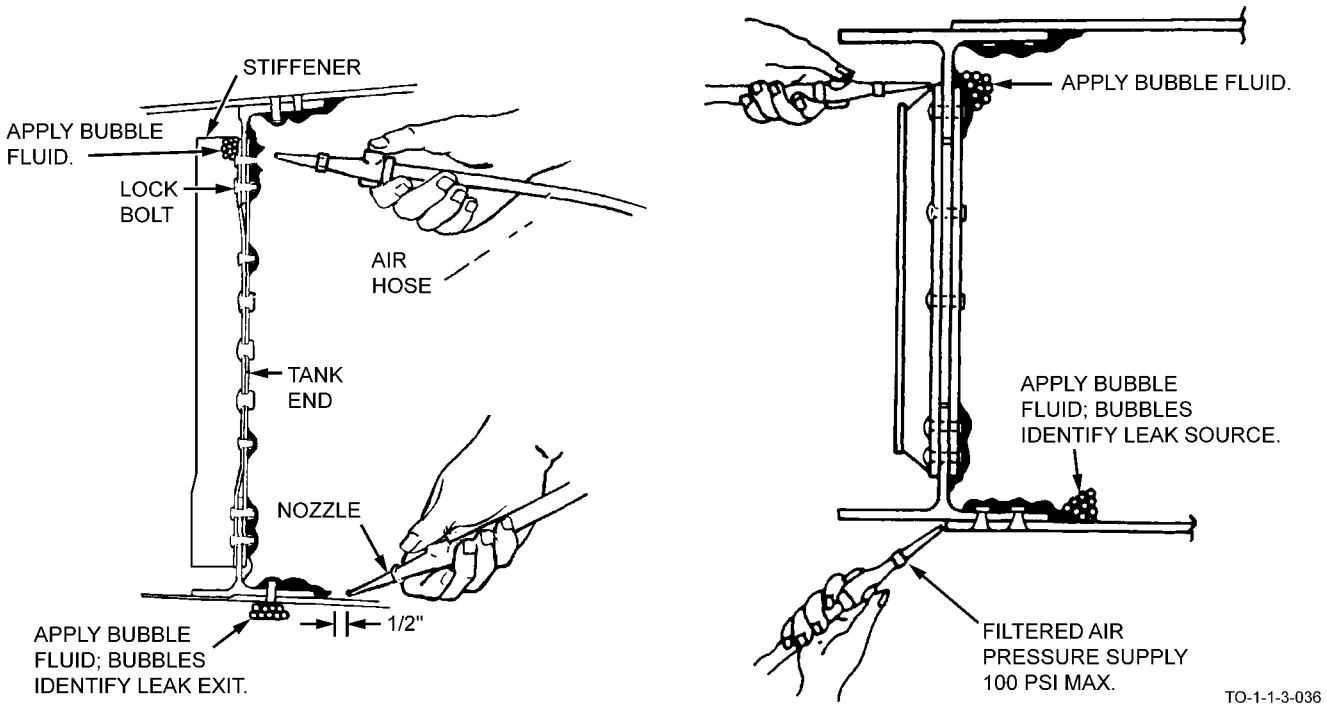

Figure 6-22. Blow Back Method

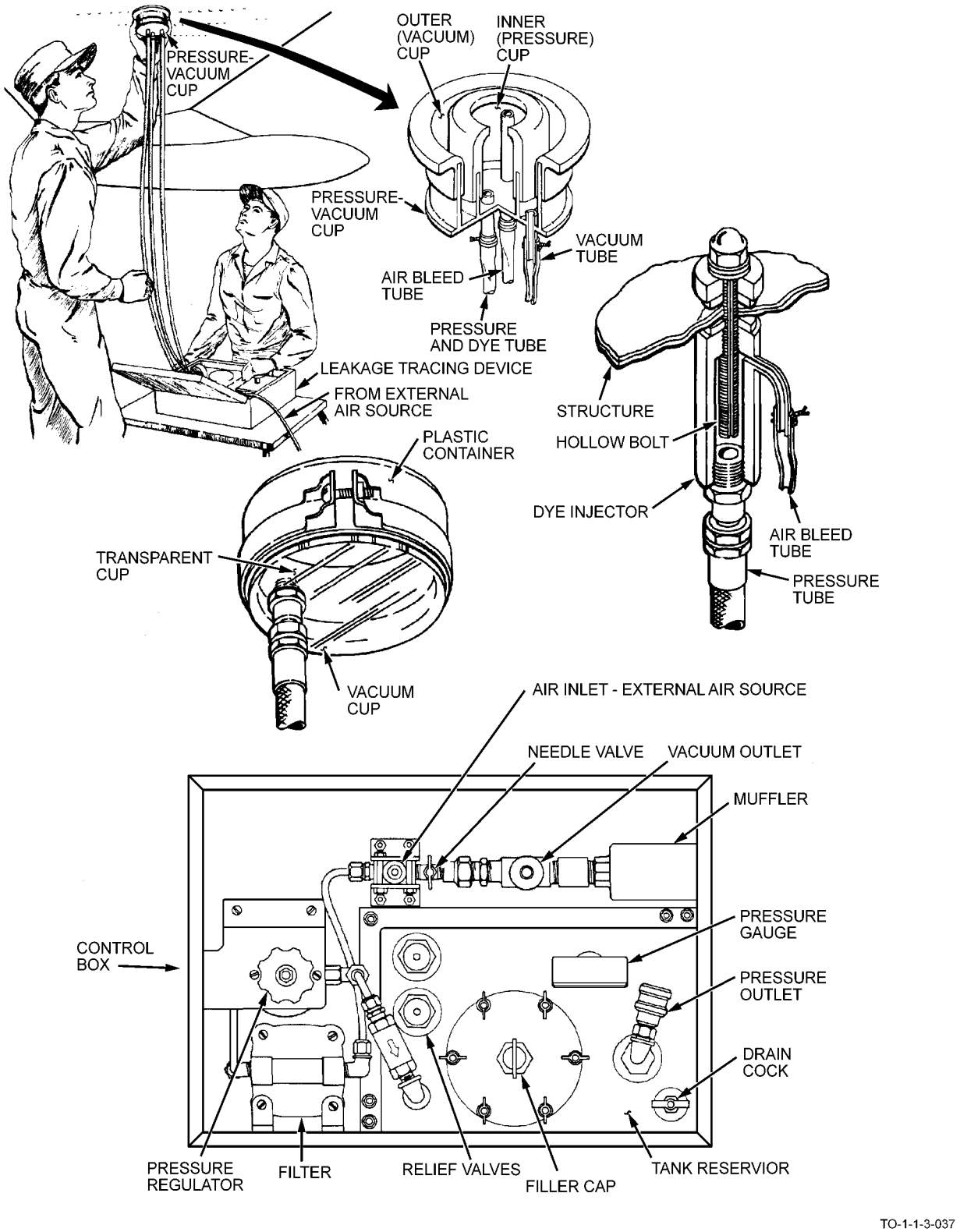

Figure 6-23. Dye Injection Method

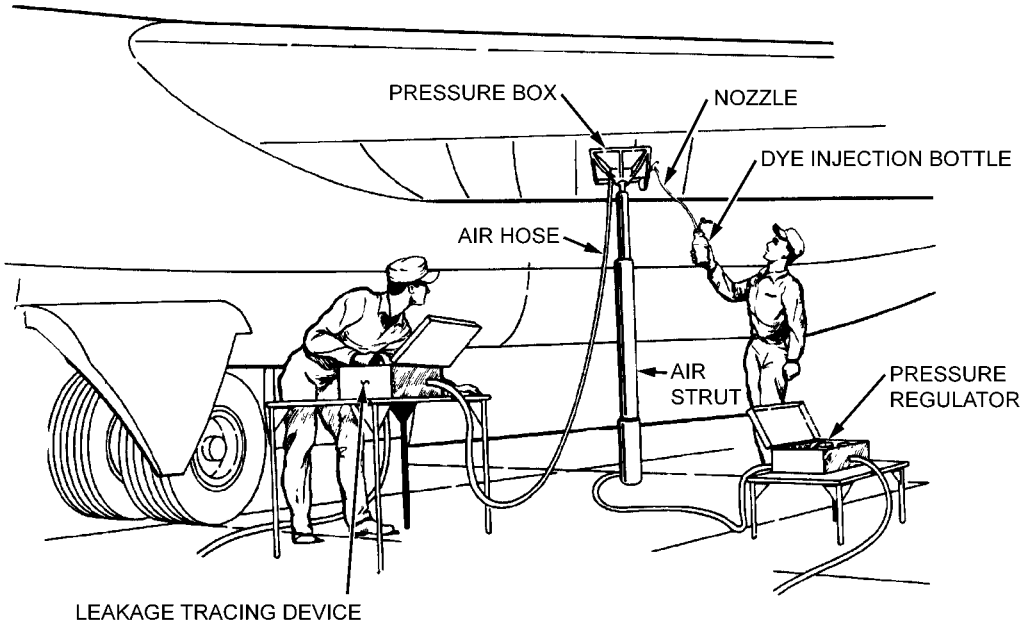

TO-1-1-3-038

Figure 6-24. Use of Pressure Box for Dye Injection

PREPARE PREPACKAGED SEALANT INJECTION CARTRIDGES FOR USE AS FOLLOWS:

NOTE

BECAUSE OF THE DIVERSITY OF THE CHEMICAL COMPOSITION OF THE MANY VARIOUS TYPES OF SEALANTS, AIRCRAFT FUEL SYSTEM MECHANICS SHOULD USE THE MANUFACTURERS' MIXING INSTRUCTIONS IN ORDER TO OBTAIN A CURABLE SEALANT IF THE MIXING INSTRUCTIONS ON THE PACKAGE ARE DIFFERENT THAN THOSE STATED IN THIS TECHNICAL ORDER.

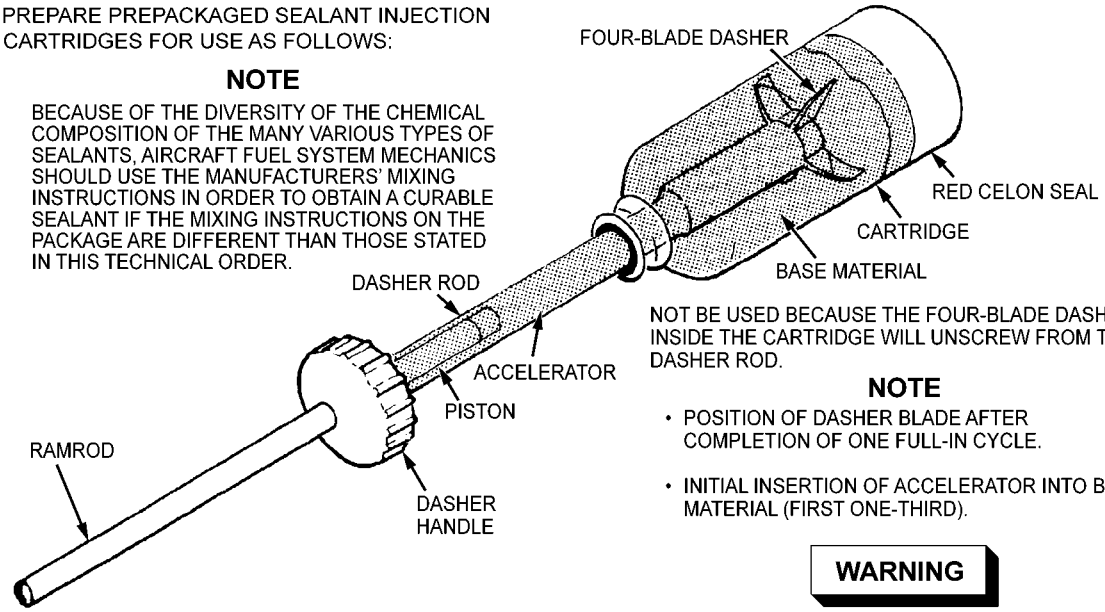

NOT BE USED BECAUSE THE FOUR-BLADE DASHER INSIDE THE CARTRIDGE WILL UNSCREW FROM THE DASHER ROD.

NOTE

- POSITION OF DASHER BLADE AFTER COMPLETION OF ONE FULL-IN CYCLE.
- INITIAL INSERTION OF ACCELERATOR INTO BASE MATERIAL (FIRST ONE-THIRD).

WARNING

THE CARTRIDGE SHALL BE HELD FIRMLY, BUT SHALL NOT BE SQUEEZED AS THE DASHER BLADES CAN SEVERELY DAMAGE THE HAND.

1. WEAR SAFETY GLASSES.
2. HOLD CARTRIDGE, GRASP DASHER ROD AND PULL BACK APPROXIMATELY ONE INCH. USE EVEN PRESSURE. DO NOT USE FORCE, TAP, POUND OR JOLT RAMROD IF PISTON DOES NOT BREAK LOOSE READILY.
3. INSERT RAMROD INTO HOLLOW OF DASHER ROD, BREAK PISTON LOOSE AND INJECT ABOUT 1/3 OF THE CONTENTS INTO THE CARTRIDGE. THE RAMROD WILL BE FULLY INSERTED INTO THE DASHER ROD WHEN ALL OF THE ACCELERATOR HAS BEEN FORCED INTO THE CARTRIDGE.
4. REPEAT STEPS 2 AND 3 UNTIL ALL OF THE CONTENTS OF THE ROD ARE EMPTIED INTO THE CARTRIDGE. THEN REMOVE RAMROD.
5. REMOVE AND DISCARD RAMROD.
6. BEGIN MIXING OPERATION BY ROTATING DASHER ROD IN A CLOCKWISE DIRECTION WHILE SLOWLY MOVING DASHER ROD TO PULL OUT POSITION. THE MIXING MUST BE DONE BY A CLOCKWISE ROTATION OF THE DASHER ROD. COUNTERCLOCKWISE ROTATION MUST
7. CONTINUE CLOCKWISE ROTATION AND SLOWLY MOVE DASHER ROD TO FULLY IN POSITION. A MINIMUM OF FIVE FULL CLOCKWISE REVOLUTIONS MUST BE MADE FOR EACH FULLY OUT STROKE AND FOR EACH FULLY IN STROKE OF THE DASHER ROD. MIX 5 MINUTES OR 50 CYCLES.
8. END MIXING ACTION WITH DASHER ROD IN FULL OUT POSITION.
9. WHILE HOLDING CARTRIDGE IN AN UPRIGHT POSITION, UNSCREW DASHER ROD BY GRIPPING DASHER BLADES IN AREA OF RED CELON SEAL AND TURNING DASHER ROD COUNTERCLOCKWISE.
10. SCREW NOZZLE INTO CARTRIDGE IF SEALANT FILLETING GUN IS TO BE USED.
11. REMOVE RED CELON SEAL AND TEST SEALANT TO INSURE THOROUGH MIXING ACTION HAS BEEN COMPLETED. IF NOT, DISCARD AND REPEAT PROCEDURES WITH NEW CARTRIDGE.
12. INSERT CARTRIDGE INTO APPLICABLE SEALANT GUN. REFER TO SEALANT GUNS.

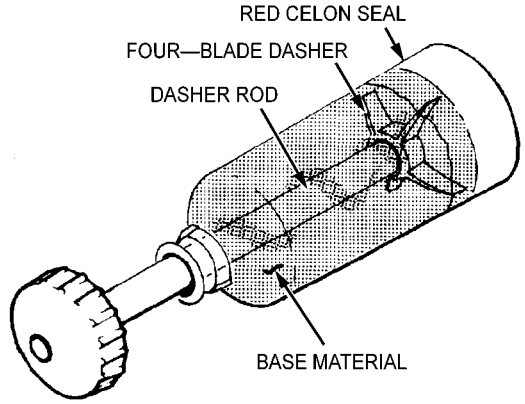

TO-1-1-3-039

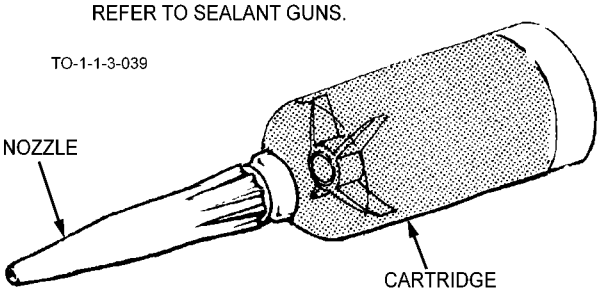

NOTE

POSITION OF DASHER BLADE AFTER COMPLETION OF MIXING AND REMOVING OF DASHER ROD.

Figure 6-25. Hand Mixing of Sealant Kit

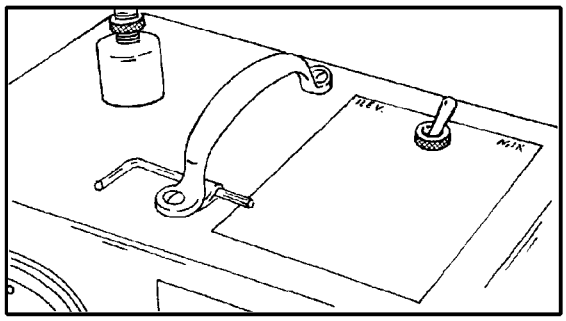

1. PLACE SELECTOR SWITCH IN "MIX" POSITION.

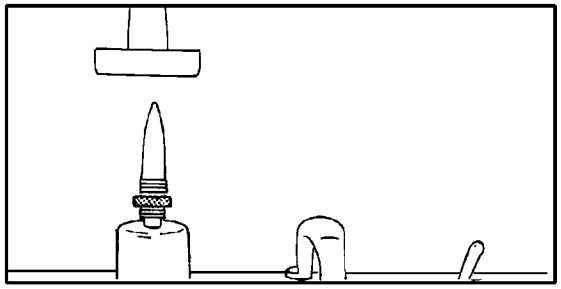

2. AFTER THE CARTRIDGE HAS BEEN PREPARED AS REQUIRED IN FIGURE 6-25, OPERATIONS 1 THROUGH 4, REMOVE RAM ROD AND PLACE THE HOLE OF THE DASHER ROD DOWN OVER THE PILOT OF THE ROTATING SPINDLE.

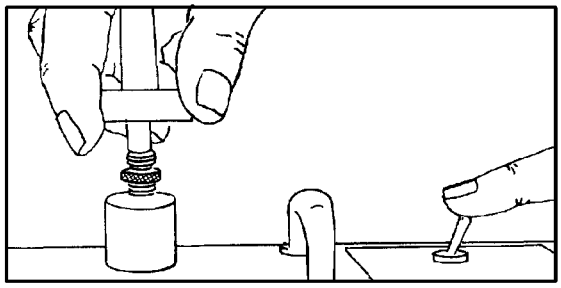

3. GRIP THE HANDLE OF THE DASHER ROD AND HOLD FIRMLY UNTIL IT IS ENGAGED WITH THE SELF-TAPPING SCREW.

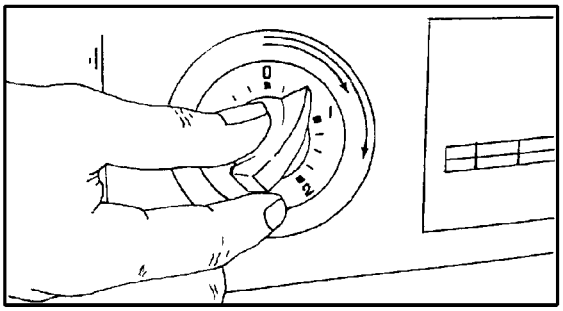

4. SET BELL TIMER TO THE REQUIRED TIME CYCLE.

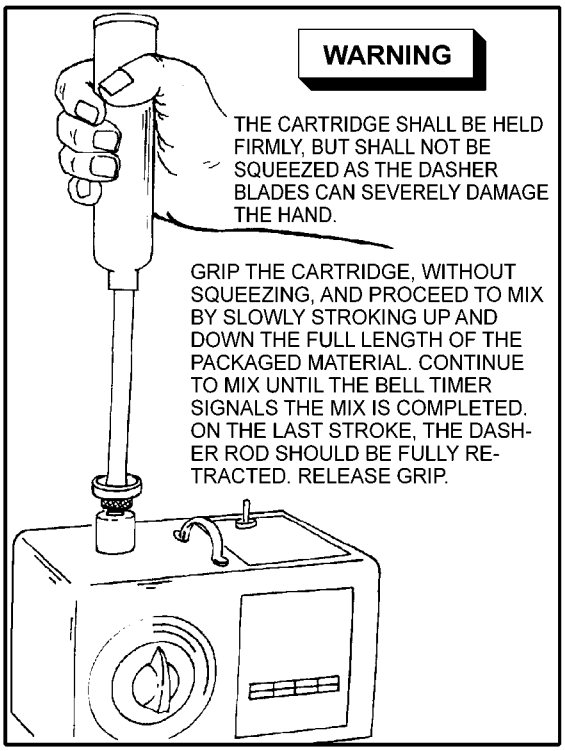

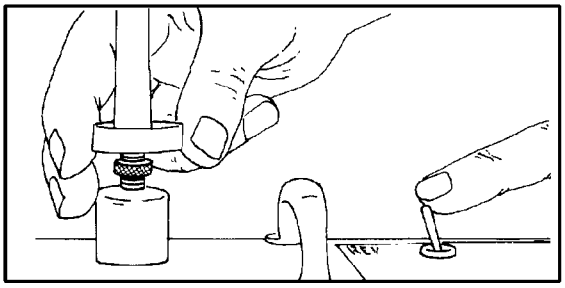

5. REMOVE CARTRIDGE FROM THE MIXER BY PLACING THE SELECTOR SWITCH IN "REVERSE" POSITION. GRIP DASHER ROD HANDLE FIRMLY AND LIFT CARTRIDGE FROM MIXER.

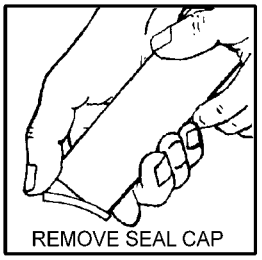

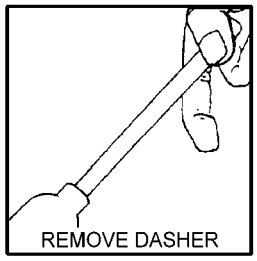

6. REMOVE SEAL CAP AND DASHER ROD. CARTRIDGE IS NOW READY FOR USE IN EITHER THE FILLETING GUN OR THE INJECTION GUN. THE INJECTION GUN USES 650 CARTRIDGE ONLY.

TO-1-1-3-040

Figure 6-26. Machine Mixing of Cartridges

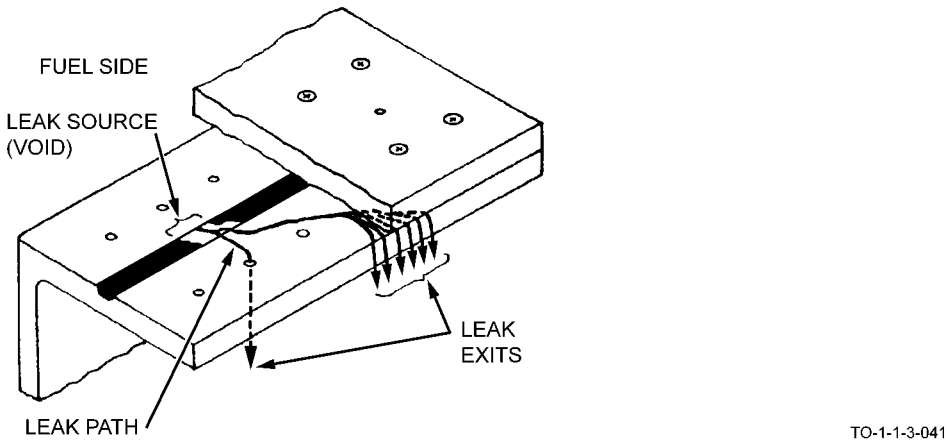

Figure 6-27. Void in Non-Curing Sealant Groove

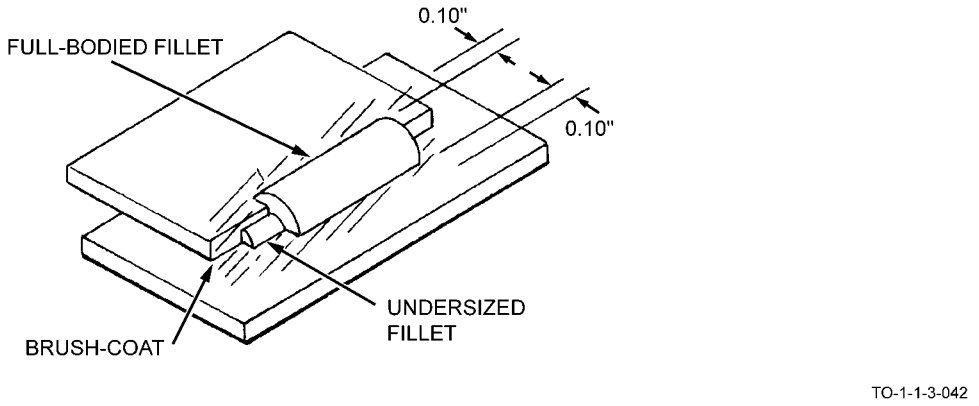

Figure 6-28. Two Bead Fillet

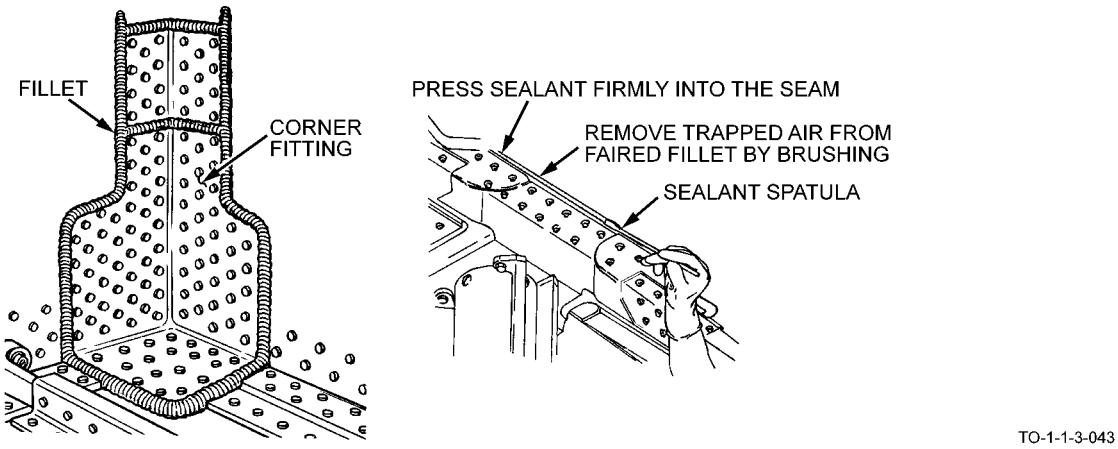

Figure 6-29. Typical Fillet Seals

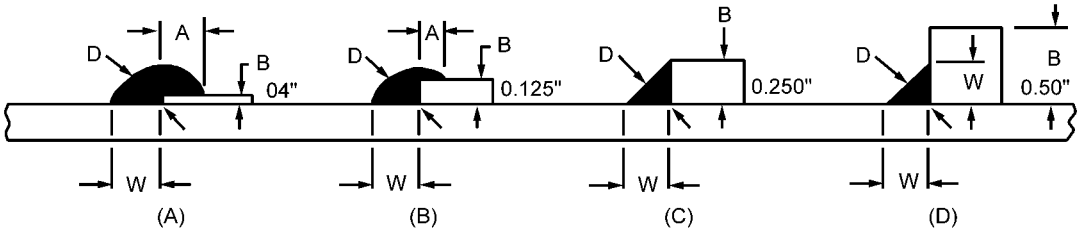

D = 0.15" TO 0.20"
W = 0.25" TO 0.37"

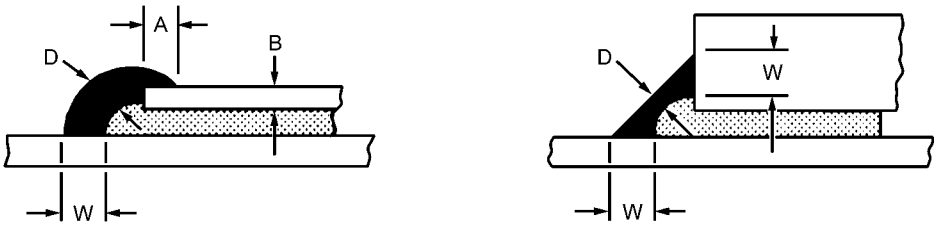

D = 0.15" TO 0.20"
W = 0.25" TO 0.37"

NOTE:
"A" IS DEFINED BY FORMULA A + B W, EXCEPT A ZERO WHEN B = 0.25" OR MORE.
CADMIUM PLATED PARTS SHOULD BE ISOLATED FROM CURING TYPE SEALANTS WITH APPROPRIATE TOPCOAT.

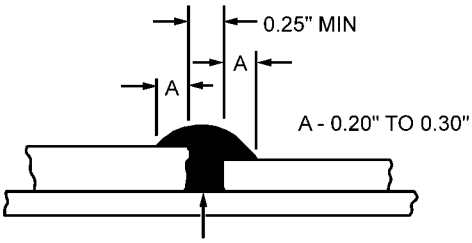

GAP MUST BE FILLED
NOT BRIDGED

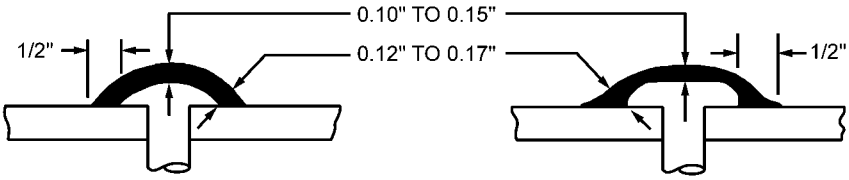

MANUFACTURED HEAD
(E)

UPSET HEAD
(F)

TO-1-1-3-044

Figure 6-30. Typical Fillet Dimensions

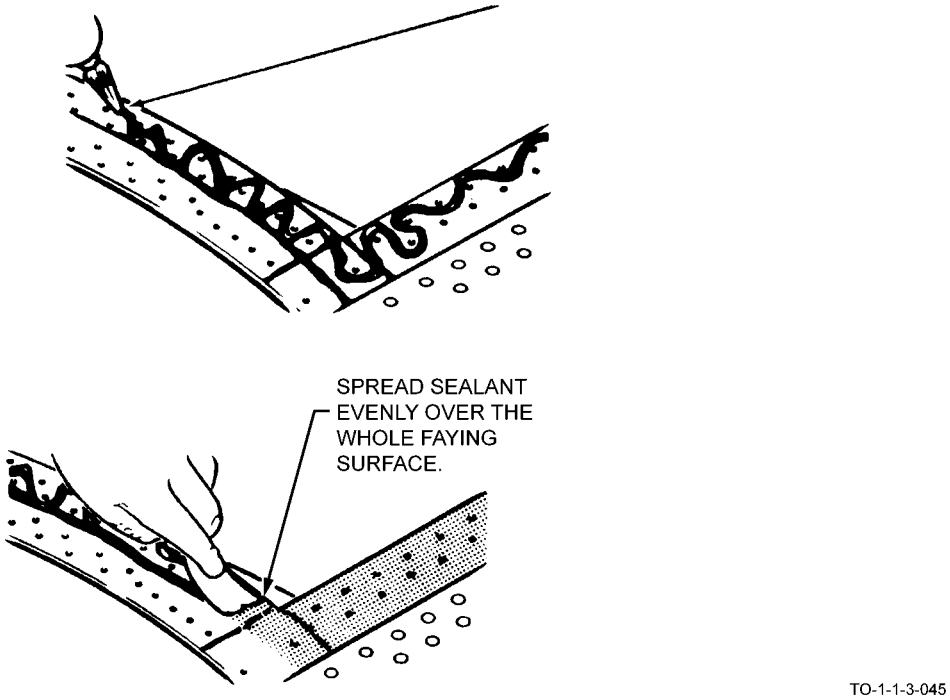

Figure 6-31. Applications of Faying Surface Sealant

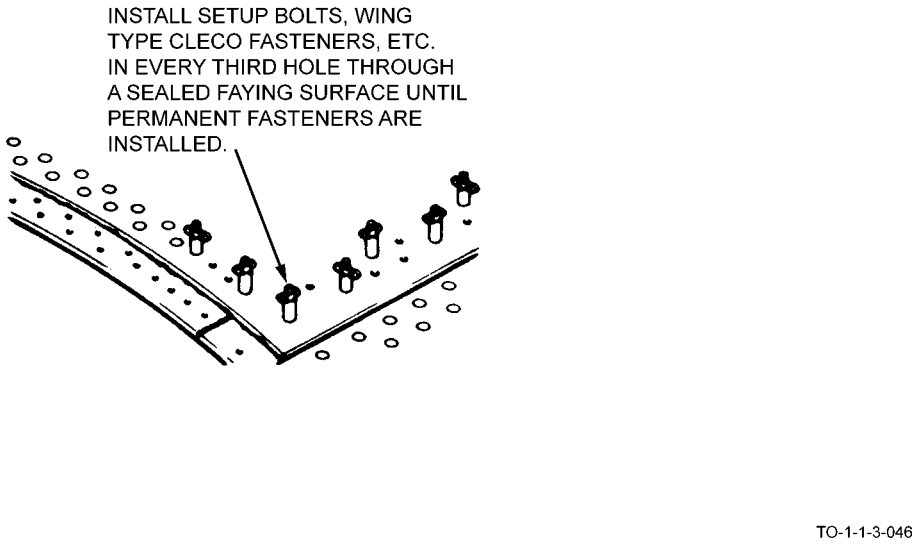

Figure 6-32. Faying Surface Seal Assembly

CHAPTER 7
ALC AND AMARC REQUIREMENTS

7.1 PURPOSE.

NOTE

Aircraft preparation requirements for heavy maintenance in an ALC/AMARC environment are more stringent than the field; as a result, safety, health and rescue requirements are less stringent. Field units shall not reference this chapter.

This chapter contains unique procedures and requirements applicable to conducting aircraft fuel systems maintenance at ALC/AMARC and shall take precedence over like guidance provided elsewhere in this technical order when working on fluid purged aircraft, except where noted. This Chapter applies only to aircraft that have been fluid purged only.

7.1.1 General. The provisions of this chapter are minimum requirements for average conditions. These provisions apply to fuel systems and non-fuel systems repair personnel (i.e., electricians, safety and supervisory personnel).

7.1.2 Applicability of Procedures. The procedures in this chapter shall be used for aircraft that have been fluid purged. Aircraft that have not been fluid purged pose a greater health and safety risk due to the properties of the fuel trapped in components, manifolds and inaccessible areas. Additionally, there are more stringent aircraft isolation and access restrictions, emergency response and rescue procedures, personnel qualification/training requirements, atmospheric monitoring and facility construction code requirements associated with normal aircraft fuel tank/cell maintenance. These additional requirements are not conducive to the typical maintenance processes employed in a high-traffic ALC/AMARC environment.

7.1.2.1 For entry into a non-fluid purged aircraft, personnel shall meet all training/qualification requirements outlined in Chapter 1; all safety requirements in Chapter 2 shall be followed, facilities shall meet all requirements in Chapter 3 and aircraft shall be prepared for maintenance and entered in accordance with Chapter 5.

7.1.2.2 Contract Maintenance. Contractors shall develop/use procedures consistent with this technical order. Fuel systems maintenance shall be conducted in authorized locations and all applicable TO 1-1-3 guidance related to safety/health of resources shall be followed. Atmospheric monitoring and other required support equipment shall meet TO 1-1-3 requirements for use in a hazardous environment.

7.2 ALC/AMARC PERSONNEL RESPONSIBILITIES, QUALIFICATIONS AND TRAINING REQUIREMENTS.

7.2.1 First-Level Supervisor. The first-level supervisor is the person that is held accountable for the safe conduct of daily fuel systems maintenance operations.

7.2.1.1 First-Level Supervisor Responsibilities.

a. Shall be responsible for ensuring safe fuel tank/cell entries through compliance with the applicable checklists, Safety, Health, and Environmental AFOSH Standards, AFI 91-203, directives, technical orders, MEP and Entry Permit.

b. Shall ensure availability and serviceability of all tools, test and support equipment required to perform safe fuel systems repair in accordance with the applicable technical orders, AFOSH Standards, AFI 91-203 and directives.

c. Shall ensure availability and serviceability of all personal protective clothing and equipment required for safe fuel systems repair in accordance with applicable technical orders, AFOSH Standards, AFI 91-203 and directives.

d. Shall author and maintain currency of the MEP.

e. Shall be the Entry Authority.

f. Shall designate and authorize Alternate Entry Authorities to act as the Entry Authority in the event of their absence.

g. Shall assist with development of the Emergency Response and Rescue Plan.

h. Shall assist with development of training plans for confined space and fuel tank/cell entries.

i. Shall assist with development of severe weather shutdown procedures.

j. Shall ensure compliance with the proper use of personal protective clothing and equipment for all fuel tank/cell entries.

k. Shall ensure all individuals requiring entry into confined spaces are trained and knowledgeable of the associated hazards.

l. Shall ensure there is a sufficient quantity of Entrants qualified to support daily operations.

m. Shall ensure there is a sufficient quantity of Attendants qualified to support daily operations.

n. Shall ensure there is a sufficient quantity of Equipment Monitor/Runner(s), if required, qualified to support daily operations.

o. Shall ensure streamer requirements of Paragraph 2.7.6.4 are followed.

7.2.2 Entry Authority/Designated Alternate. An Entry Authority or Designated Alternate is the person that is held accountable for the safe conduct of daily fuel systems repair. The Entry Authority and First Level Supervisor is usually the same person. The Alternate Entry Authorities, as designated on the MEP, are the personnel that have been given the authority to assume full responsibility for the safe conduct of fuel systems repair in the absence of the Entry Authority.

7.2.2.1 Entry Authority/Designated Alternate Responsibilities.

a. Shall be responsible for ensuring safe fuel tank/cell entries through compliance with the applicable checklists, Safety, Health, and Environmental AFOSH Standards, AFI 91-203, directives, technical orders, MEP and Entry Permit.

b. Shall issue or cancel entry permits, as necessary.

c. Shall complete, sign and ensure compliance with each Entry Permit.

d. Shall ensure there is a sufficient quantity of Entrants qualified and available.

e. Shall ensure there is a sufficient quantity of Attendants qualified and available.

f. Shall ensure there is a sufficient quantity of Equipment Monitor/Runner(s), if required, qualified and available.

g. Shall implement severe weather shutdown plan.

h. May authorize the Attendant to monitor multiple fuel tanks/cells provided they are capable of maintaining effective communication with the Entrants.

i. May authorize the Equipment Monitor/Runner to monitor multiple repair areas provided they are capable of maintaining effective communication with the Attendants.

7.2.3 Entrant. An Entrant is any person that physically enters an entry permit-required confined space to perform fuel tank/cell repair. During extended periods of fuel/tank cell maintenance, personnel may change positions; therefore, the Entrant could become the Attendant. Personnel must be knowledgeable of the responsibilities associated with the position they have been designated to assume and meet the prerequisite qualifications.

7.2.3.1 Entrant Responsibilities.

a. Shall be responsible for executing safe fuel tank/cell entries through compliance with the applicable checklists, Safety, Health, and Environmental AFOSH Standards, AFI 91-203, directives, technical orders, MEP and Entry Permit.

b. Shall obey instructions from the Attendant.

7.2.3.2 Entrant Training and Qualification Requirements. As a minimum, the Entrant shall:

a. Be respirator qualified (As a minimum, FOT is initial and every 12 months as required by AFI 48-137).

b. Be trained/qualified on confined space and entry procedures, documentation requirements, and knowledgeable of the associated hazards (As a minimum, FOT is initial and refresher 12 months).

c. Be trained/qualified on the use of atmospheric monitoring equipment and testing confined space atmospheres (As a minimum, FOT is initial).

d. Have had weapons system specific fuel tank/cell familiarization training (As a minimum, FOT is initial).

e. Be trained on self-rescue procedures (As a minimum, FOT is initial and refresher every 12 months).

f. Be trained/qualified on the Emergency Response and Rescue Plan procedures (As a minimum, FOT is initial and refresher every 12 months).

g. Be trained/qualified on the use of fuel systems specific support equipment (As a minimum, FOT is initial).

h. Be trained on the proper use, inspection and wear of PPE (As a minimum, FOT is initial and refresher every 12 months).

i. Be trained on use of communication equipment (As a minimum, FOT is initial).

j. Be trained on recognizing symptoms of overexposure to chemicals, solvents and fuels (As a minimum, FOT is initial and refresher every 12 months).

7.2.4 Attendant. An attendant is any person that is stationed outside of an entry permit-required confined space remaining within any area that allows the Attendant to maintain readily available contact by monitoring the Entrant through use of voice, visual and/or auditory signals to ensure effective continued communication and safety. During extended periods of fuel/tank cell repair, personnel may change positions; therefore, if qualified, the Attendant could become the Entrant at any time. Personnel must be knowledgeable of the responsibilities associated with the position they have been designated to assume and meet the prerequisite qualifications.

7.2.4.1 Attendant Responsibilities.

a. Shall be responsible for ensuring safe execution of fuel tank/cell entries through compliance with the applicable checklists, Safety, Health, and Environmental AFOSH Standards, AFI 91-203, directives, technical orders, MEP and Entry Permit.

b. Shall never permit entry into an IDLH atmosphere.

c. Shall limit fuel tank/cell entry to only qualified and authorized personnel.

d. Shall have overall responsibility for monitoring the fuel tank/cell for hazards.

e. Shall ensure atmospheric readings are taken and documented on the entry permit in accordance with this chapter and ensure the atmospheric monitoring equipment serial number is recorded on the entry permit.

f. Shall have overall responsibility for monitoring the Entrant through use of voice, visual and/or auditory signals.

g. Shall order the termination of maintenance and evacuation of fuel tank/cell at the first sign of a hazard or personnel distress.

h. Shall initiate the Emergency Response and Rescue Plan, if required.

i. May, when authorized, monitor multiple fuel tanks/cells as long as they are capable of maintaining effective communication with the Entrants.

7.2.4.2 Attendant Training and Qualification Requirements. As a minimum, the Attendant shall:

a. Be trained/qualified on confined space and entry procedures, documentation requirements, and knowledgeable of the associated hazards (As a minimum, FOT is initial and refresher 12 months).

b. Be trained/qualified on the use of atmospheric monitoring equipment and testing confined space atmospheres (If not qualified, FOT is prior to assuming duties).

c. Have had weapons system specific fuel tank/cell familiarization training (As a minimum, FOT is initial).

d. Be trained on self-rescue procedures (As a minimum, FOT is initial and refresher every 12 months).

e. Be trained/qualified on the Emergency Response and Rescue Plan procedures (As a minimum, FOT is initial and refresher every 12 months).

f. Be trained/qualified on the use of fuel systems specific support equipment (As a minimum, FOT is initial).

g. Be trained on the proper use, inspection and wear of PPE (As a minimum, FOT is initial and refresher every 12 months).

h. Be trained on use of communication equipment (As a minimum, FOT is initial).

i. Be trained on recognizing symptoms of overexposure to chemicals, solvents and fuels (As a minimum, FOT is initial and refresher every 12 months).

7.2.5 Equipment Monitor/Runner. An Equipment Monitor/Runner is any person that physically monitors the fuel systems repair area for hazards, unauthorized personnel and support equipment to ensure safe and continuous operation. Additionally, in the event of an emergency, they are responsible for notifying rescue personnel in accordance with the Emergency Response and Rescue Plan. During extended periods of fuel/tank cell repair, personnel may change positions; therefore, if trained/qualified, the Equipment Monitor/Runner could become the Attendant or Entrant at any time. Personnel must be knowledgeable of the responsibilities associated with the position they have been designated to assume and meet the prerequisite qualifications.

7.2.5.1 As a minimum, Equipment Monitors/Runners shall be used during fuel foam removal, any time the aircraft has not been fluid purged and whenever the VOC level is 600 PPM (10% LEL) or greater.

7.2.5.2 Equipment Monitor/Runner Responsibilities.

a. Shall have overall responsibility for monitoring the repair area for hazards and unauthorized personnel.

b. Shall monitor essential fuel tank/cell entry support equipment within the repair area to ensure safe and continuous operation.

c. Shall immediately notify the Attendant if a hazard develops or support equipment becomes inoperative.

d. Shall direct rescue team to the scene in accordance with the Emergency Response and Rescue Plan.

e. May, when authorized, monitor multiple repair areas provided they are capable of maintaining effective communication with the Attendants.

7.2.5.3 Equipment Monitor/Runner Training and Qualification Requirements (minimum). As a minimum, the Equipment Monitor/Runner shall:

a. Be knowledgeable of the associated hazards of the fuel systems repair (If not qualified, FOT is prior to assuming duties).

b. Be trained on the Emergency Response and Rescue Plan procedures (If not qualified, FOT is prior to assuming duties).

c. Be trained on the use of fuel systems specific support equipment (If not qualified, FOT is prior to assuming duties).

d. Be trained on use of communication equipment (If not qualified, FOT is prior to assuming duties).

e. Be trained on hangar door operation, if applicable (If not qualified, FOT is prior to assuming duties).

7.2.6 Documentation of Training. Completion of respirator and confined space training may be tracked in an electronic database but as a minimum, shall be documented on an AF Form 55, Employee Safety and Health Record. A record of training shall be available for the CSPT to review during annual program evaluations and spot checks.

7.3 SAFETY AND HEALTH REQUIREMENTS.

7.3.1 ALC/AMARC maintenance facilities shall be certified by the MXG/CC, or equivalent, Safety, BEF, and Fire Department for open fuel tank/cell maintenance. Facilities shall be identified on an Addendum to the MEP. They shall be recertified annually.

7.3.1.1 Refueling, defueling, fuel transfer, draining, fuel tank/cell repair and/or inspection, purging and depuddling may only be accomplished in authorized facilities/areas.

7.3.1.2 ALC/AMARC facilities shall be equipped with fire extinguishers. The type and location will be determined by the Fire Protection Flight for the associated hazards in accordance with NFPA 10 and NFPA 101. Flight line fire extinguishers (150 lb Halon 1211) are procured for the protection of aircraft and adjacent ground equipment. Flight line extinguishers shall not be located within any facility except for fueled aircraft hangars. They are placed according to the guidelines in TO 00-25-172.

7.3.2 Aircraft shall be fluid purged prior to entry into an ALC/AMARC facility where heavy maintenance and fuel tank/cell repair is expected to occur concurrently. Prior to hangaring the aircraft the LEL will be checked to ensure the aircraft is Fire Safe/Hangar Safe (20% LEL).

7.3.3 A checklist shall be developed/followed to ensure aircraft are properly prepared prior to entry into a heavy maintenance facility. The applicable checklists in Chapter 5 may be modified and implemented but as a minimum, the following shall be used.

a. Ensure aircraft is fluid purged in accordance with this chapter.

b. Ensure aircraft is drained to the greatest extent possible, in accordance with the applicable weapons system technical order.

c. Ensure aircraft is parked in accordance with applicable weapons system technical order and local directives.

7.3.4 If all of the following conditions are met.

a. Aircraft has been fluid purged in accordance with Paragraph 7.6.

b. Aircraft has been drained, including fuel lines, to the greatest extent practical.

c. Aircraft fuel tanks/cells have been depuddled to the greatest extent practical.

d. Fuel tank/cell fuel foam has been removed from the aircraft.

e. Opened fuel tanks/cells are maintained at 300 PPM (5% LEL) or less at all times.

7.3.4.1 Only then,

a. Aircraft heavy maintenance and fuel tank/cell repair may be done concurrently.

b. Non-intrinsically safe equipment may be used.

c. Electrical power may be applied to the aircraft.

7.3.5 Unless fluid purged, aircraft requiring open fuel tank/cell maintenance after functional check shall be positioned in an authorized fuel systems repair area and entered using the procedures in Chapter 5.

7.3.6 Open fuel systems repair areas shall be designated in accordance with NFPA 410 and the MEP. The ALC Safety office, Fire Protection Services and Production Division Chief shall develop and implement controls to ensure personnel, vehicle and aircraft traffic near any outside open fuel systems repair areas is minimized.

7.3.7 Personal protective clothing and equipment shall be used as required by OSHA, AFOSH Standards, AFI 91-203, the local BEF and Safety.

7.3.7.1 Tri-Layer coveralls shall be worn during wet fuel operations, fuel foam removal/installation and during fuel tank/cell entry operations until the fuel tank/cell has been completely depuddled, dried and ventilated with no chance of leakage of fuel from removal of manifolds, pumps, valves, etc. White cotton, DuPont TYVEK or Kimberly Clark A30/A40 coveralls are permissible in lieu of Tri-Layer coveralls after the completion of wet fuel operations and when performing non permit entries.

7.3.8 Weather Conditions.

7.3.8.1 Climatic Conditions. Extreme weather coupled with fuel systems repair can create dangerous conditions for personnel and equipment. Personnel shall closely monitor weather conditions during open fuel tank/cell repair and take the necessary precautions to mitigate the associated risks.

7.3.8.1.1 Cold, dry and windy weather can cause an increased safety risk due to the rapid build-up of static electricity and the strength of the discharge. Personnel shall make every attempt to ground themselves more often during these conditions. Extreme cold weather also causes rapid freezing of the skin.

7.3.8.1.2 Hot weather causes fuel to evaporate quicker and makes maintaining PPM (LEL) at authorized levels more difficult. Personnel shall ensure proper purging, ventilation and atmospheric monitoring procedures are used. Extreme hot weather can also cause heat-related personnel injuries/illnesses.

7.3.8.1.3 High winds 30 knots or higher, as defined by the local severe weather checklist or OI, can damage aircraft/injure personnel by creating a hazard from falling or wind blown materials/equipment. High winds do not affect aircraft that are fully enclosed within a hangar.

7.3.8.1.4 Thunderstorms/lightning can cause power outages, ignition of fuel vapors or electrocution of personnel. See Paragraph 7.3.8.2 for notification procedures.

7.3.8.2 Severe Weather Notification. The MXG/CC or equivalent, in coordination with the Base Weather Office, Safety, and Fire Protection Services, shall develop a local checklist or OI that addresses more specific local severe weather notification procedures and precautionary measures.

7.3.8.2.1 As a minimum, notification through the applicable agencies to maintenance personnel shall occur when severe weather conditions are within five nautical miles.

7.3.8.2.2 When severe weather is within five nautical miles of the repair site, the Entry Authority or Designated Alternate shall maintain communication with the Base Weather Office to gauge the direction and speed of the severe weather. Open fuel tank/cell maintenance may continue however, depending on the complexity of the repair task and weather conditions, the scope of the operation may need to be scaled back to allow operations to be suspended quickly.

7.3.8.2.3 Operations shall be completely suspended in accordance with the local OI when conditions exist that may jeopardize the safety of resources.

7.4 ATMOSPHERIC MONITORING.

CAUTION

To prevent damage to the meter, keep it away from fuel puddles or wetting hazards such as fuel foam, manifold outlets, pump inlets, etc.

NOTE

The atmospheric monitoring procedures in Chapter 2 shall be used on non-fluid purged aircraft.

Table 7-1. Allowable ALC/AMARC VOC PPM and LEL Levels

	PID Meter	Equivalent LELs
Fire Safe (for foam removal)	1200 PPM	20% LEL
Entry Safe	600 PPM	10% LEL
Concurrent Maintenance	300 PPM	5% LEL
Hot Work	90 PPM	1.5% LEL

7.4.1 Using the PID Meter. The PID meter is not required to be used in a constant monitoring capacity on fluid purged aircraft in an ALC/AMARC environment.

7.4.1.1 As a minimum, open fuel tanks/cells shall be sampled once every 4 hours, or more often as deemed necessary, whenever the VOC level is 600 PPM (10% LEL) or greater. Each reading shall be recorded on the Entry Permit, Definitized Guide or equivalent.

7.4.1.2 As a minimum, open fuel tanks/cells shall be sampled once every 8 hours, or more often as deemed necessary, whenever the VOC level is less than 600 PPM (10% LEL) but greater than 300 PPM (5% LEL). Each reading shall be recorded on the Entry Permit, Definitized Guide or equivalent.

7.4.1.3 As a minimum, open fuel tanks/cells shall be sampled once per day, or more often as deemed necessary, whenever the VOC level is less than 300 PPM (5% LEL). Each reading shall be recorded on the Entry Permit, Definitized Guide or equivalent.

7.4.2 Deleted.

7.4.2.1 Deleted

7.4.2.2 Deleted

7.4.2.3 Deleted

7.5 CONFINED SPACE FUEL TANK/CELL ENTRY.

7.5.1 General.

7.5.1.1 The instructions contained within this chapter outline the procedures required for entry into "permit-required confined spaces". The basis for these requirements is derived from federal regulations and AFOSH Standards, AFI 91-203. The requirements outlined as follows are specific to aircraft fuel systems repair and more stringent; therefore, shall take precedence over federal regulations and AFOSH Standards, AFI 91-203.

a. "Confined space" as defined by Federal Regulation 29 CFR 1910.146:

(1) Is large enough and so configured that an employee can bodily enter and perform work; and

(2) Has limited or restricted means of entry or exit (for example, tanks, vessels, silos, storage bins, hoppers, vaults and pits are spaces that have limited means of entry) and;

(3) Is not designed for continuous employee occupancy.

b. Bodily enter, or Entry, is defined as the action by which a person passes through an opening into a permit-required confined space. Entry includes ensuing work activities in that space and is considered to have occurred as soon as any part of the Entrant's body breaks the plane of the opening into the space.

c. A permit-required confined space means a confined space that has one or more of the following characteristics.

(1) Contains or has the potential to contain a hazardous atmosphere;

(2) Contains a material that has the potential for engulfing the entrant;

(3) Has an internal configuration such that an entrant could be trapped or asphyxiated by inwardly converging walls or by a floor that slopes downward and tapers to a smaller cross section, or;

(4) Contains any other recognized safety or health hazard.

d. A non-permit required confined space means a confined space that does not contain, or with respect to atmospheric hazards have the potential to contain, any hazard capable of causing death or serious physical harm.

7.5.1.2 BEF, through annual surveys of the work environment and associated health hazards, and Safety are the agencies that determine assignment of confined spaces as either permit- or non-permit required.

7.5.1.3 Confined space entry can be for various reasons (e.g., inspection, repair or rescue); certain sequences of events may require entry into a confined space with hazards present beyond the scope covered in this technical order. These entries will be coordinated with the MXG/CC or equivalent, Safety, BEF and Fire Protection Services.

7.5.1.4 The procedures within this technical order are for routine, recurring fuel tank/cell entries and not intended for use for entry into an Immediately-Dangerous-to-Life and Health (IDLH) environment.

7.5.1.5 Entry into an IDLH environment is prohibited. For the purposes of this technical order, an IDLH environment is one that contains greater than 1200 PPM VOC (greater than 20% LEL) and/or an oxygen content of less than 19.5% or greater than 23.5%. This definition is based on the known hazards associated with fuel tank/cell repair. In accordance with AFI 91-203, only personnel fully qualified/trained in entry into, and rescue from, an IDLH atmosphere are authorized entry.

7.5.1.6 Confined space training will be provided by qualified individuals using a lesson/training plan approved by the Entry Authority, Safety, BEF and Fire Protection Services.

7.5.1.7 A minimum of two personnel shall be used when entering a fuel tank/cell. The first person (Entrant) shall enter the fuel tank/cell; the second person (Attendant) shall remain outside the fuel tank/cell to monitor and assist the Entrant.

7.5.1.7.1 When a third person, (Equipment Monitor/Runner) is required, they shall remain in the vicinity of the Attendant to monitor the repair area and equipment for hazards. Additionally, the Equipment Monitor/Runner shall call for help and assist in accordance with the Emergency Response and Rescue Plan.

7.5.2 Emergency Response and Rescue Plan.

7.5.2.1 The MXG/CC or equivalent, Safety, BEF and Fire Protection Services shall coordinate on a written emergency response and rescue plan. The plan shall identify the responsibilities of a rescue team and the procedures to remove individuals incapable of self-rescue from fuel tanks/cells. The plan will account for foreseeable rescue situations and, as a minimum:

a. Shall be exercised annually by the CSPT.

(1) The exercise shall be documented by the wing's Confined Space Program OPR and distributed to affected agencies. A copy of the report shall be maintained on file for two years.

(2) The CSPT may practice making removals from actual or simulated fuel tanks using dummies or available personnel.

b. Shall list the equipment and facility requirements necessary to safely remove an incapacitated entrant.

c. Shall define the roles/activities of all responding emergency agencies, including rescue procedures from a fuel tank/cell from which removal by the Attendant has failed or is not possible.

d. Shall account for rescue procedures from an IDLH environment by qualified personnel.

e. Shall clearly identify rescue attempt responsibilities. The following general procedures may be used as a guide but should be modified for local conditions:

(1) The Attendant shall contact the Entrant, if possible, to determine the nature of the emergency.

(2) If possible, the Attendant shall make initial rescue attempts from outside the fuel tank/cell.

WARNING

Failure to notify personnel of an incapacitated Entrant and the need to summon rescue agencies could lead to severe injuries or death.

(3) The Attendant shall initiate the Emergency Response and Rescue Plan.

WARNING

Failure to maintain operational emergency communication equipment at the repair area will result in less than timely notification to/response by emergency services and could lead to severe injuries or death.

(4) Emergency services shall be contacted by the most direct means available.

(5) The Attendant shall sample the fuel tank/cell atmosphere in accordance with this chapter and ensure a minimum of a fire-safe level exists.

(6) The Attendant shall ensure the fuel tank/cell is properly ventilated, if possible.

(7) When emergency services are in place, take appropriate rescue measures/actions.

7.5.2.2 Rescue capability shall exist for all shifts during which fuel tank/cell entry must be accomplished.

7.5.3 Master Entry Plan (MEP). (Formally known as Master Entry Permit or Entry Permit Authorization Letter.)

7.5.3.1 The MEP authorizes the First Level Supervisor, or equivalent, to act as the Entry Authority for fuel tank/cell entries. The MEP does not authorize entry into a permit-required confined space. The MEP shall be developed by the organization performing fuel tank/cell entries and approved by MXG/CC or equivalent, Safety, BEF and Fire Protection Services. The MEP:

a. Shall be issued for a maximum of one year.

b. Shall authorize, by name and position, the Entry Authority.

c. Shall designate and authorize, by name and position, Designated Alternates. There should be a sufficient quantity of Designated Alternates identified to cover all operations and shifts. Designated Alternates shall be knowledgeable of the hazards of confined spaces and associated procedures contained in this technical order, applicable AFOSH Standards, AFI 91-203 and the MEP.

d. Shall specifically state that any entry inconsistent with the conditions of the MEP shall not be authorized by the Entry Authority or any Designated Alternate.

e. Shall list permit and non-permit required confined spaces on each weapons system worked.

f. Shall list approved fuel systems repair facilities/areas (primary, alternate, open and temporary) and specific conditions for use deemed necessary by MXG/CC or equivalent, Safety, BEF and Fire Protection Services.

g. Shall describe the conditions under which the Entry Authority or Designated Alternates may issue Entry Permits including:

(1) The type weapons system(s) the MEP and Entry Permits apply to.

(2) General description of the routine and recurring type tasks that will be performed during permitted entries and the duty sections that will be performing the work.

(3) Authorized atmospheric conditions of the fuel tank/cell (e.g., fuel tank/cell properly purged, oxygen, PPM (LEL) percentage).

(4) Type chemicals, sealants, adhesives, etc., authorized for use in the fuel tank/cell.

h. Shall be reviewed, approved and endorsed by the MXG/CC or equivalent, Safety, BEF and Fire Protection Services annually. Approval will be based on reviews and assessments of:

(1) Fuel tank/cell familiarization and related confined spaces training programs developed as required by MXG/CC, Safety, BEF and Fire Protection Services.

(2) Entry Permit issuing procedures.

(3) Authorized atmospheric monitoring equipment as listed and used.

(4) Authorized PPE as listed and used.

(5) Emergency Response and Rescue Plan.

(6) Findings of the last Emergency Response and Rescue Plan exercise and verification of corrective actions, if any.

7.5.3.2 Adherence to MEP While Deployed or Transient.

7.5.3.2.1 A copy of the home station MEP shall be taken on every deployment.

7.5.3.2.2 Fuel tank/cell entry shall not be made while deployed/transient to any location until emergency response and rescue procedures appropriate to the location have been identified and coordinated, if applicable.

7.5.3.2.3 Deployed/Transient to a location with fuel systems repair support capabilities (i.e., facilities, areas, trained/qualified personnel, etc.). When deployed/transient to a location with fuel systems repair support capabilities, adhere to the requirements of the host base MEP to the maximum extent possible. The senior deployed/transient fuel systems repair person shall coordinate fuel tank/cell entries with the host base Fuel Systems Section. If additional personnel are required for fuel tank/cell entry, the senior deployed/transient fuel systems repair person shall:

a. Coordinate with the host base Fuel Systems Section to acquire a qualified Attendant and Equipment Monitor/Runner, as required.

b. Brief personnel on work to be performed and provide them with aircraft fuel tank/cell familiarization training.

7.5.3.2.3.1 The host base Fuel Systems Section Chief, or designated alternate, shall brief deployed/transient personnel on local MEP requirements prior to the start of any fuel tank/cell entry.

7.5.3.2.4 Deployed/Transient to a location without fuel systems repair support capabilities (i.e., facilities, areas, trained/qualified personnel, etc.). When deployed/transient to a location without fuel systems repair support capabilities, adhere to the requirements of the home station MEP to the maximum extent possible. The senior deployed fuel systems repair person shall coordinate fuel tank/cell entries with the host base Safety, BEF and Fire Protection Services, if available. The unit shall make provisions for at least two qualified fuel systems repair personnel for fuel tank/cell entry. If two qualified personnel are not available, a maintenance recovery team may be necessary. As a minimum, an Equipment Monitor/Runner shall be selected from available on-site personnel and shall be briefed on their duties.

7.5.4 Entry Permit. (Formally known as Field Permit) The AF Form 1024, Confined Space Entry Permit, authorizes entry into permit-required confined spaces. It shall be a written document and can be modified and locally reproduced.

7.5.4.1 The Entry Authority or Designated Alternate shall only issue an Entry Permit for fuel tank/cell entries performed under conditions consistent with the MEP. Entry Permits may be issued for similar tasks performed under similar conditions in different fuel tanks/cells on the same aircraft. The Entry Permit will cover the duration of the task(s) to be performed unless conditions under which the Entry Permit was issued change prior to task completion. The Entry Permit will never be issued for more than one year. The Entry Authority/Designated Alternate will:

a. Only issue an Entry Permit after all controls and testing are established/accomplished. Permits shall only be issued when conditions of the MEP are met.

b. Never permit entry into a fuel tank/cell with an IDLH atmosphere.

c. Ensure fuel tank/cell entries and the work performed adhere to established safety practices, procedures in this technical order and the MEP.

d. Ensure fuel tank/cell entry team (Entrant, Attendant and Equipment Monitor/Runner, if required) are qualified in accordance with this chapter.

7.5.4.2 The Entry Authority or Designated Alternate will amend or reissue the Entry Permit if conditions of the original Entry Permit change prior to task completion, and the changed conditions are consistent with the MEP. Entry Permit conditions are considered changed if:

a. The originally permitted task(s) change.

b. The aircraft is moved.

c. Any condition that develops that is inconsistent with or not in adherence to this technical order or the MEP.

d. Chemicals not listed in the MEP are introduced into the fuel tank/cell.

e. Personnel not previously listed on the Entry Permit require entry into the fuel tank/cell.

7.5.4.3 The Entry Permit shall be on hand at the open fuel tank/cell repair area. Cancelled Entry Permits, generated at home station or while deployed, shall be maintained and filed for one year by the issuing authority.

7.6 FLUID PURGING.

7.6.1 Fluid Purging Procedures.

7.6.1.1 Required Equipment and Materials. Aircraft refuel/defuel equipment, MIL-PRF-38299 purging fluid, MIL-PRF-6081 (Grade 1010 oil), JP-5, JP-8, Jet A, or Jet A-1, and an approved fuel collection container. HQ AFMC/SES prepared a formal System Safety Engineering Analysis (SSEA) that concluded that any jet fuel with a flashpoint of 100 degrees F or higher can be used as a purging fluid as long as the required LELs are met and sustained.

7.6.1.2 Procedures.

a. Defuel aircraft in accordance with applicable weapons system technical order.

b. Drain fuel tanks in accordance with applicable weapons system technical order.

c. Ensure MIL-PRF-38299 purging fluid, MIL-PRF-6081 (Grade 1010 oil), JP-8 or fuel, is/has been tested for solids contamination in accordance with TO 42B-1-1 prior to use.

d. Ensure MIL-PRF-38299 purging fluid, MIL-PRF-6081 (Grade 1010 oil), JP-8 or fuel, is/has had all necessary additives added in accordance with TO 42B-1-1 prior to use.

e. Connect purging fluid supply to aircraft.

f. Fill each tank. If possible, the purging fluid should be transferred to other fuel tanks/cells using the aircraft fuel pumps to ensure it is distributed through refuel/transfer manifolds and components. The purging fluid shall remain in each fuel tank/cell for a minimum of 10 minutes before removal or transfer.

g. Remove purging fluid from tanks.

7.7 AIRCRAFT PREPARATION FOR FUEL SYSTEMS MAINTENANCE.

7.7.1 The following precautions and procedures shall be followed prior to opening any fuel tank/cell for purging, depuddling or removing fuel foam.

WARNING

Concurrent maintenance shall not be performed during the following procedures: refueling, fuel transfer, defueling, fuel tank pressurization or any other operation deemed unsafe by the first line supervisor, or equivalent. Failure to comply could result in injury or death to personnel and damage to, or destruction of, the aircraft.

a. General checklists for fuel systems repair facilities/areas and fuel tank/cell entries shall be accomplished in accordance with Paragraph 5.4 prior to opening a fuel tank/cell. Checklists in Chapter 5 may be used and modified for local use.

b. All personnel shall have the applicable training and qualifications addressed in this chapter.

c. Aircraft shall be made safe for maintenance in accordance with this technical order and the applicable weapons system technical order prior to opening a fuel tank/cell.

7.8 AIR PURGING.

7.8.1 Combination Purge.

NOTE

The procedures for blow and exhaust purging are the same as the combination purge except the exhaust duct is removed to blow purge or the blow duct is removed to exhaust purge.

7.8.1.1 Required Equipment. Air mover and air source (optional), air ducts, purge equipment, approved fuel collection container and authorized monitoring equipment.

7.8.1.2 Procedures.

a. Ensure compliance with precautions and procedures in the applicable weapons system technical orders.

b. Ensure aircraft or applicable fuel tank(s) is/are defueled in accordance with the weapons system technical order.

c. Ensure applicable fuel tank(s)/cell(s) is/are drained in accordance with the weapons system technical order.

d. Position the purge equipment so it does not create a safety hazard. Bond the equipment in accordance with Chapter 2.

e. Connect blow and/or exhaust purge duct(s) to the purging equipment and extend towards the applicable fuel tank/cell access door(s). Bond the ducts in accordance with Chapter 2.

f. Start the air mover and purge equipment prior to opening the fuel tank/cell access door(s).

WARNING

To prevent the possibility of a fire or explosion on non-fluid purged aircraft, the purge equipment must be turned on prior to connecting the air ducts to the aircraft. If power fails, immediately remove the air duct from the aircraft and move the duct and purge equipment, if applicable, to a vapor-free area. Failure to comply with this procedure could result in injury or death to personnel and damage to, or destruction of, the aircraft. (Not applicable if the requirements of paragraph 7.3.4 are met.)

g. Carefully remove applicable fuel tank/cell access doors in accordance with the weapons system technical order.

h. If applicable, open the fuel tank filler cap and position the air mover in the opening. Bond the air mover in accordance with Chapter 2 and secure it to the wing surface using shot bags to stabilize it.

i. Position purge duct(s) in the fuel tank/cell access opening(s).

j. Purge fuel tank/cell for 30 minutes. If required, move the duct(s) to a different position after 15 minutes to complete the purge.

k. Remove purge duct(s) from the fuel tank/cell access opening(s).

CAUTION

To prevent damage to the monitoring equipment, keep it away from fuel puddles or wetting hazards such as manifold outlets, pump inlets, etc.

l. Check oxygen level in the fuel tank/cell to ensure it is between 19.5 and 23.5%. If the oxygen level is outside of this range, continue purging for 15 minutes. Recheck oxygen level. Continue process until a safe oxygen level exists.

m. Skip to step s for entry into a fuel tank/cell containing fuel foam.

n. Check VOC PPM (LEL). If the fuel tank/cell VOC level is above 600 PPM (10% LEL), continue purging for 15 minutes. Recheck PPM (LEL) level. Continue process until an entry-safe condition exists.

o. Drain manifolds and components to the greatest extent possible and depuddle the fuel tank/cell in accordance with Chapter 5.

p. Purge fuel tank/cell for 30 minutes. If required, move the duct(s) to a different position after 15 minutes to complete the purge.

q. Check VOC PPM (LEL). If the fuel tank/cell VOC level is above 300 PPM (5% LEL), continue purging for 15 minutes. Recheck PPM (LEL) level. Continue process until a concurrent maintenance condition exists.

r. Continuously ventilate fuel tank/cell while the Entrant is performing maintenance inside the fuel tank/cell. Monitor VOC PPM (LEL) in accordance with Paragraph 7.4.

s. Check VOC PPM (LEL). If the fuel tank/cell VOC level is above 1200 PPM (20% LEL), continue purging for 15 minutes. Recheck PPM (LEL) level. Continue process until a fire-safe condition exists.

t. Remove fuel foam from the fuel tank/cell in accordance with Chapter 5, and store in accordance with Chapter 5. Continue purging and monitor VOC PPM (LEL) in accordance with Paragraph 7.4.

u. Check VOC PPM (LEL). If the fuel tank/cell VOC level is above 600 PPM (10% LEL), continue purging for 15 minutes. Recheck PPM (LEL) level. Continue process until an entry-safe condition exists.

v. Drain manifolds and components to the greatest extent possible and depuddle the fuel tank/cell in accordance with Chapter 5.

w. Purge fuel tank/cell for 30 minutes. If required, move the duct(s) to a different position after 15 minutes to complete the purge.

x. Check VOC PPM (LEL). If the fuel tank/cell VOC level is above 300 PPM (5% LEL), continue purging for 15 minutes. Recheck PPM (LEL) level. Continue process until a concurrent maintenance condition exists.

y. Continuously ventilate fuel tank/cell while the Entrant is performing maintenance inside the fuel tank/cell. Monitor VOC PPM (LEL) in accordance with Paragraph 7.4.

7.9 AIRCRAFT FUEL SYSTEMS INSPECTION REQUIREMENTS.

7.9.1 As a minimum, the following aircraft fuel systems inspections and repairs should be made on all weapons systems undergoing programmed depot maintenance:

7.9.1.1 All temporary repairs should be removed and the fuel tanks thoroughly inspected for leaks prior to defueling the aircraft. Suspect leaks shall be marked, troubleshot and repaired, if required, once the fuel tanks are opened.

7.9.1.2 Aircraft fuel bladder cells should be removed, inspected and tested for serviceability as directed in the aircraft PDM/UDLM work specifications.

7.9.2 More specific inspection requirements may be necessary based on specific weapons system requirements, technical orders, or contractual obligations.

CHAPTER 8
EQUIPMENT AND MATERIALS

8.1 PURPOSE.

8.1.1 This chapter contains information covering equipment and material substitution and lists equipment and materials typically used to accomplish fuel tank/cell repair using instructions provided in this technical order.

8.2 GENERAL.

Table 8-1 lists approved common support equipment and materials used to perform fuel tank/cell repair. It is not all inclusive and does not cover weapon system specific equipment that has been authorized for use by the applicable ASG.

8.3 EQUIPMENT AND MATERIAL SUBSTITUTION.

8.3.1 Support equipment and repair materials require a thorough review and analysis before they are approved for use. These criteria include, but are not limited to, health, environmental and safety considerations, equipment and material reliability, maintainability and sustainability, material interactions and cost.

8.3.2 Before considering the replacement of what appears to be outdated equipment with expensive modern technology, a thorough evaluation of factors such as ruggedness, portability, mobility, ease of use, time and manpower required to set up/tear down the equipment, total cost to maintain (i.e., cost of consumables, inspection requirements, etc.), calibration requirements (user, PMEL and manufacturer), technical data availability, etc., must be closely scrutinized. Even though a technology may be marketed effectively and appear to be very valuable, further investigation may reveal the return on investment is less than desirable and may wind up costing more in terms of effectiveness and efficiency.

8.3.3 Support equipment and repair materials shall not be substituted without proper authorization. Improper material selection has been proven to cause problems ranging from corrosion to adhesive bond failure. The use of improper equipment can create an environmental, health and safety hazard, or could damage the aircraft or injure personnel.

8.3.4 MAJCOM and Local Environmental Management, BEF, Fire Protection Services and Safety Offices may prohibit or recommend the use of weapons system support equipment and repair materials, but they shall not authorize their use.

8.3.5 The MAJCOM Aircraft Fuels Systems Functional Manager/Superintendent, the ASG and the OPR for this technical order are the only personnel/organizations authorized to approve substitutions to support equipment and material required by this technical order. Additionally, they shall approve the testing or demonstration of any support equipment or materials prior to use on the aircraft.

8.4 SAFETY EQUIPMENT.

8.4.1 Air Purifier Cart. The cart is used to remove airborne contaminates, e.g., oil vapor, carbon monoxide, from shop air. The cart shall provide air conforming to specification BB-A-1034 Grade D. The cart shall be tested every 45 days.

8.4.2 Water Manometer Functional Check. This procedure will verify that no FOD nor deposits will block the manometer and cause erroneous readings and possible fuel tank/cell ruptures.

a. Ensure reservoir is serviced with the proper mixture of 50% distilled water and 50% ethylene glycol.

b. Verify reservoir fluid is filled to the proper level.

c. Ensure appropriate plugs and caps are removed.

d. Connect air source to reservoir.

e. Apply ¼ psi until measurement reads at least 5 inches of water.

f. Shut off air source.

WARNING

Failure to bleed air pressure from reservoir before disconnecting air source can cause injury to personnel and/or damage to equipment.

g. Bleed air pressure from reservoir.

h. Ensure water measurement on sight tube drops immediately to zero inches of water.

i. Disconnect air source.

j. If water measurement does not drop immediately or is slow to drop to zero inches of water, inspect manometer for blockage (Refer to manufacturer's instructions).

k. If blockage is found, remove blockage and re-accomplish Step a. through Step h.

8.5 MATERIALS.

The materials approved for use in fuel system repair are divided into the following categories: adhesives/cements, cleaners/solvents, external (temporary) patch materials, fuel cell repair materials, corrosion protection materials, leak detection materials, purge fluids, baffle inerting material, coatings, and general purpose consumables. All materials listed may not be necessary to perform fuel tank repair. Consult the weapons system specific technical manual or this technical manual for requirements.

NOTE

Some adhesives, sealants and cements require special storage. Refer to the stock list, AFMAN 23-110, or manufacturer's recommendations. Attention must be paid to the shelf life and age control examination

Table 8-1. Common Consumables

Personnel Protective Clothing					
Coveralls, White	MIL-C-2202, Type II	Refer to Mil Spec	EA	Non-wet Fuel Operations	Small
Coveralls, White	MIL-C-2202, Type II	Refer to Mil Spec	EA	Non-wet Fuel Operations	Medium
Coveralls, White	MIL-C-2202, Type II	Refer to Mil Spec	EA	Non-wet Fuel Operations	Large
Coveralls, White	MIL-C-2202, Type II	Refer to Mil Spec	EA	Non-wet Fuel Operations	X-Large
Coveralls, White	MIL-C-2202, Type II	Refer to Mil Spec	EA	Non-wet Fuel Operations	XX-Large
Coveralls, Tri-Layer Nylon	#8000R 03262	8415-01-500-9098	EA	Wet Fuel Operations	X-Small
Coveralls, Tri-Layer Nylon	#8000R 03263	8415-01-500-9312	EA	Wet Fuel Operations	Small
Coveralls, Tri-Layer Nylon	#8000R 03264	8415-01-500-9100	EA	Wet Fuel Operations	Medium
Coveralls, Tri-Layer Nylon	#8000R 03266	8415-01-500-9313	EA	Wet Fuel Operations	Large
Coveralls, Tri-Layer Nylon	#8000R 03267	8415-01-500-9101	EA	Wet Fuel Operations	X-Large
Coveralls, Tri-Layer Nylon	#8000R 03268	8415-01-500-9099	EA	Wet Fuel Operations	XX-Large
Gloves, Chemical Resistant	MIL-G-87066	8415-01-147-6263	PR	Chemical/Fuel Handling	Size 7
Gloves, Chemical Resistant	MIL-G-87066	8415-01-147-9540	PR	Chemical/Fuel Handling	Size 8
Gloves, Chemical Resistant	MIL-G-87066	8415-01-012-9294	PR	Chemical/Fuel Handling	Size 9
Gloves, Chemical Resistant	MIL-G-87066	8415-01-013-7382	PR	Chemical/Fuel Handling	Size 10
Gloves, Chemical Resistant	MIL-G-87066	8415-01-013-7384	PR	Chemical/Fuel Handling	Size 11
Gloves, Cotton	A-A-1665	8415-00-268-8330	PR	Sealant Application	Regular
Gloves, Leather Palm Knife Cuff	JJ-G-451	8415-00-268-8351	PR	Glove Insert	(W) One Size
Gloves, Leather Palm Knife Cuff	JJ-G-451	8415-00-268-8349	PR	Glove Insert	(M) One Size
Gloves, Fuel Handlers	MIL-G-87066	8415-01-529-2616	PR	JP-8 Fuel Handling	Medium Narrow

Table 8-1. Common Consumables - Continued

Gloves, Fuel Handlers	MIL-G-87066	8415-01-529-2618	PR	JP-8 Fuel Handling	Medium Wide
Gloves, Fuel Handlers	MIL-G-87066	8415-01-529-2621	PR	JP-8 Fuel Handling	Large Narrow
Gloves, Fuel Handlers	MIL-G-87066	8415-01-529-2624	PR	JP-8 Fuel Handling	Large Wide
Gloves, Fuel Handlers	MIL-G-87066	8415-01-529-2638	PR	JP-8 Fuel Handling	X-Large
Personal Protective Equipment					
Face Shield	A-A-1770	4240-00-542-2048	EA	Face protection	
Goggles	A-A-1110	4240-00-052-3776	EA	Eye Protection	Clear
PID Meter			EA	Atmospheric Monitoring	
MiniRae 3000			EA	Atmospheric Monitoring	
MultiRae 1005114-1			EA	Atmospheric Monitoring	
(MSA)		6350-01-464-0256	EA	Atmospheric Monitoring	
Knee Pads	20KP	4240-00-595-3861	PR	Knee Protection	Adjustable
Fuel Systems Support Equipment					

Table 8-1. Common Consumables - Continued

Blower, Pneumatic Operated	NF17-8	4140-01-105-6326	EA	Fuel Tank/Cell Purging	8" 1600 CFM
Fuel Cell Servicing Cart	92103000	1740-01-326-0421	EA	Equipment Consolidation	
Fuel Foam Cart				Transport Fuel Foam	
Vacuum Cleaner, Pneumatic	55-IAS	7910-00-632-9840	EA	Fuel Tank Depuddling	46 CFM
Plenum Chamber	PC-2	4730-01-593-5389	EA	Fuel Tank/Cell Ventilation	12" Duct
Ventilation Duct Air Mover	APV-2	4140-01-105-6326	EA	Fuel Cell/Tank Ventilation	8" Duct
Ventilation Duct Air Mover	APV-12	4140-01-096-1596	EA	Fuel Cell/Tank Ventilation	12" Duct
Plenum Chamber	PC-2	4730-01-593-5389	EA	Fuel Tank/Cell Ventilation	12" Duct
Control Box, Leakage Tracing Device	F71382	4920-00-531-5513	EA	Control Air Pressure	
Leakage Tracing Device					
Air Strut					
Fan, Ventilating	NF-14-2	4140-01-096-1596	EA	Fuel Tank/Cell Ventilating	12" 2200 CFM
Deleted					
Deleted					
Water Manometer	F52828-106	4920-00-793-0650	EA	Fuel Tank Pressurization	See Figure 8-2
Water Manometer (U-Shaped)	10AA25WM	6685-00-527-7262	EA	Fuel Cell Pressurization	See Figure 8-3
Water Manometer (U-Shaped)	B1103	6685-00-536-9243	EA	Fuel Cell Pressurization	See Figure 8-3
Ontario Knife	GGG-C-746	7340-00-680-0863	EA	Cutting Fuel Foam	12"
Pump, Ambient Air Breathing	NF-15-3	4240-01-084-7521	EA	Respirator Air Supply	
Pump, Breathing Air Electric Explosion Proof	NF-23-1	4310-01-339-7785	EA	Respirator Air Supply	12 CFM
Utility Pail (Rubber Bucket)	B12R	7420-01-150-0716	EA	General Purpose	3 Gallons
Helitest Wing Kit	DET-HWK	6635-01-519-8907	EA	All Aircraft Maintenance	TO 33D2-3-56-11
Tank Pressurization System	DET-TPS	6635-01-571-0575	EA	Fuel Tank/Cell Maintenance	TO 33D2-3-56-21
Rapid Curing Device	RCD-RXM-Kit	4440-01-569-6426	EA	All Aircraft Maintenance	TO 33D2-3-56-31
Rapid Desealing System	RDS-001	6635-01-572-5251		All Aircraft Maintenance	TO 33D2-3-56-41
Manual Desealing System	RD-MS-1001		Kit	All Aircraft Maintenance	
Vacuum Tape					
Flexible Film					

Table 8-1. Common Consumables - Continued

Extrima Leak Detector	AS90604	6635-01-573-5143	Kit	All aircraft maintenance	
Trace 101 Leak Detector		4940-01-587-8902	Kit	All aircraft maintenance	
Hytracker Leak Detector	DET-HY-001	6635-01-572-4783	Kit	All aircraft maintenance	
H2000 Leak Detector	None	None	Kit	All aircraft maintenance	
Adhesives/Cements					
Adhesion Promoter, Chlorinated	PR-147	8030-01-093-5383	BT	Increase Sealant Adhesion	1 Pint
Adhesion Promoter, Aerosol	PRO SEAL 151	8030-01-131-3228	CN	Increase Sealant Adhesion	1 Pint
Adhesion Promoter, Aerosol	PRO SEAL 152	7930-01-233-4041	CN	Increase Sealant Adhesion	1 Pint
Adhesion Promoter, Non-Chlorinated	PR-148	8030-00-560-8756	BT	Increase Sealant Adhesion	1 Pint
Adhesive, Heat Vulcanizing	1895C	8040-01-280-5524	KT	Fuel Cell Repair	1 Pint
Adhesive, Heat Vulcanizing	1895C	8040-01-491-0207	KT	Fuel Cell Repair	1 Pint
Adhesive, Heat Vulcanizing	LP729 or PU-156	8040-00-200-6415	KT	Fuel Cell Repair	1 Quart
Adhesive, Hot or Cold Bonding	MMM-A-189, Class 2	8040-00-543-7170	PT	Nitrile Cell Repair	2 Ounce
Adhesive, Phoecel	5071C	8040-00-390-5606	KT	Nitrile Cell Repair	1 Quart
Adhesive, Room Temperature Cure	MIL-A-9117 or EC678	8040-00-262-9060	CN	Nitrile Cell Repair	1 Quart
Adhesive, Room Temperature Cure	MIL-A-9117, Class L	8040-00-266-0839	CN	Nitrile Cell Repair	1 Pint
Adhesive, Room Temperature Cure	MIL-A-9117, Class L	8040-00-262-9060	CN	Nitrile Cell Repair	1 Quart
Adhesive, Room Temperature Cure	MIL-A-46050 Eastman 910	8040-00-142-9193	BX	Fuel Cell Repair	(10) 1 Ounce Bottles
Adhesive, Vithane	82C32	8040-01-243-6624	KT	Fuel Cell Repair	1/2 Pint
Cement, Vithane	5902C or 5923C	8040-00-518-3455	KT	Vithane Fuel Cell Repair	1/2 Pint
Cement	MMM-A-122	8040-00-266-0824	TU	For bonding synthetic rubber, metal, glass, and many plastics	20 Ounce
Sealants					
Sealing Compound	MIL-S-8802	8030-01-337-9408		Fuel Tank Repair	2.5 Ounce
Sealing Compound	MIL-S-8802 B-1/2	8030-01-154-9253	KT	Fuel Tank Repair	12 Ounce
Sealing Compound	MIL-S-8802 B-1/2	8030-01-371-8405	KT	Fuel Tank Repair	6 Ounce
Sealing Compound	MIL-S-8802 B-2	8030-01-154-9256	KT	Fuel Tank Repair	12 Ounce
Sealing Compound	MIL-S-8802, Type 2 B-1/2	8030-00-753-5004	CA	Fuel Tank Repair	3.5 Ounce

Table 8-1. Common Consumables - Continued

Sealing Compound, Low Adhesion	MIL-S-8784 B-1/2	8030-01-028-4336	KT	Fuel Tank Repair	24 Ounce
Sealing Compound, Low Adhesion	MIL-S-8784 B-2	8030-01-383-4993	KT	Fuel Tank Repair	3.5 Ounce
Sealing Compound, Non-curing rubber-based	PR-702	8030-00-851-8379	CN	Fuel Tank Repair	Pint
Sealing Compound, Non-curing fluorosilicone sealant	94-011	6850-01-508-0957	CT	Fuel Tank Repair	
Sealing Compound, Non-curing Cyanosilicone Sealant	G-651	8030-01-043-2295	CT	Fuel Tank Repair	7.5 Ounce

Table 8-1. Common Consumables - Continued

Structural Adhesive Sealant, Thermo-setting, Nitrile Phenolic	Q4-2805	8030-01-347-0974	CA	Fuel Tank Repair	8 Ounce
Sealing Compound, Loctite	MIL-S-22473 Grade A	8030-00-081-2338	BT	Fastener Sealing	50cc (Red)
Sealing Compound, Class B2	PR1826	8030-01-290-5138	KT	Fuel Tank Repair	2.5 Ounce
Sealing Compound, Class B2	PR1826 B-1/4	8030-01-290-5134	KT	Fuel Tank Repair	2.5 Ounce
Sealing Compound, Class B2	PR1826 B-1/2	8030-01-290-5137	KT	Fuel Tank Repair	3.5 Ounce
Sealing Compound, Class B2	PR1826 B-2	8030-01-290-5139	KT	Fuel Tank Repair	6 Ounce
Sealing Compound, for uncoated cad-mium	MIL-C-83019	8030-00-498-5268	KT	Fuel Tank Repair	1.5 Quart
Sealing Compound, High Temp	MIL-S-83430	8030-01-383-4185	KT	Fuel Tank Repair	2.5 Ounce
Sealing Compound, High Temp	MIL-S-83430 B-1/4	8030-01-214-0374	KT	Fuel Tank Repair	6 Ounce
Sealing Compound, High Temp. Poly-sulfide	MIL-S-83430, A-1/2	8030-00-602-0107	KT	Fuel Tank Repair	6 Ounce
Sealing Compound, High Temp. Poly-sulfide	MIL-S-83430, A2	8030-00-602-0049	KT	Fuel Tank Repair	1/2 Pint
Sealing Compound, High Temp. Poly-sulfide	MIL-S-83430, B-1/2	8030-00-348-7888	KT	Fuel Tank Repair	12 Ounce
Sealing Compound, High Temp. Poly-sulfide	MIL-S-83430, B2	8030-00-485-3237	KT	Fuel Tank Repair	12 Ounce
Sealing Compound, High Temp. Poly-sulfide	MIL-S-83430, B2	8030-00-560-8758	KT	Fuel Tank Repair	6 Ounce
Sealing Compound, High Temp. Poly-sulfide	MIL-S-83430	8030-00-312-6128			6 Ounce tube
Sealing Compound, Low Temperature Cure - Class A-1	MIL-S-83318	8030-00-474-1419	KT	Fuel Tank Repair	6 Ounce
Sealant, Non-curing	MIL-S-85344	8030-01-043-2295	CA	Fuel Tank Repair	1/2 Pint
Sealing Compound, Non-curing Fluo-rosilicone Sealant	94-031	8030-00-145-0310	CA	Fuel Tank Repair	1/2 Pint
Desealant	MIL-D-9063, Type 1	8030-00-080-0031	CN	Soften Sealant	1 Gallon
Polyurethane Seal-ant	SAE AMS 3278A, Meggitt EFC-100	Unknown	KT	Integral Fuel Tank Repair	Various

Table 8-1. Common Consumables - Continued

Polyurethane Sealant	Sealant EF-5992A4 AMS 3278	8030-01-599-6254	KT	Integral Tank Repair	1 Gallon
Polyurethane Sealant	Sealant EF-5992A4 AMS 3278	8030-01-599-6596	KT	Integral Tank Repair	1 Quart
Polyurethane Sealant	Sealant EF-5992A4 AMS 3278	8030-01-599-6597	KT	Integral Tank Repair	1 Pint
Polyurethane Sealant	Sealant EF-5992A4 AMS 3278	8030-01-599-6598	KT	Integral Tank Repair	1/2 Pint
Polyurethane Sealant	Sealant EF-5992B1 AMS 3278	8030-01-561-2285	KT	Integral Tank Repair	6 Ounces
Polyurethane Sealant	Sealant EF-5992B1/2 AMS 3278	8030-01-599-1713	KT	Integral Tank Repair	6 Ounces
Sealant Application Equipment					
Air Tool, Sioux Ind	1AM1141/51K	Unknown	EA	Powered Cutters to Remove Sealant	5 Cutters per Box
Sealant Cartridge	250-CP6	5120-00-670-3294	EA	Used with Sealant Gun	6 Ounce
Sealant Cartridge	250-C6	5120-00-673-1886	EA	Used with Sealant Gun	6 Ounce
Sealant Cartridge	250-CP-2 1/2	5120-00-670-3295	EA	Used with Sealant Gun	2.5 Ounce
Sealant Dispenser	250	5130-00-341-1931	EA	Sealant Application	Accepts 2 1/2, 6, and 12 Ounce
Sealant Gun	223	5130-00-345-1179	EA	Sealant Application	12 Ounce Refillable
Sealant Gun, High Pressure	507A	5120-00-677-7439	EA	Sealant Application	6 Ounce
Sealant Mixing Machine	285A	4940-00-996-1566	EA	Mixing Sealants	
Nozzle, Caulking Gun	1010	5120-01-082-9941	EA	Sealant Application	
Nozzle, Caulking Gun - Filleting, Bent	1010-45	5120-00-055-4056	EA	Sealant Application	
Nozzle, Caulking Gun	8605	5120-01-337-9450	EA	Sealant Application	See Figure 8-11
Nozzle, Caulking Gun	8607	5120-00-966-5381	EA	Sealant Application	See Figure 8-11
Nozzle, Caulking Gun	8608	5120-00-966-8244	EA	Sealant Application	See Figure 8-11
Nozzle, Caulking Gun - Filleting, Duckbill	8613	5120-00-966-5379	EA	Sealant Application	See Figure 8-11
Nozzle, Caulking Gun - Filleting, Duckbill	8615	5120-00-966-5378	EA	Sealant Application	See Figure 8-11

Table 8-1. Common Consumables - Continued

Nozzle, Caulking Gun - Filleting, Wide	8630	5120-00-966-5377	EA	Sealant Application	See Figure 8-11
Nozzle, Caulking Gun - Filleting, Brush	8630-9	5120-00-966-5376	EA	Sealant Application	See Figure 8-11
Nozzle, Caulking Gun	8646	5120-00-966-5374	EA	Sealant Application	See Figure 8-11
Nozzle, Caulking Gun - Filleting, Duckbill	8648	5120-00-966-5375	EA	Sealant Application	See Figure 8-11
Nozzle, Caulking Gun	8690	5120-00-966-8243	EA	Sealant Application	See Figure 8-11
Nozzle, Caulking Gun	600-E	5120-00-670-1187	EA	Sealant Application	See Figure 8-11
Nozzle, Caulking Gun	252	5120-00-167-0150	EA	Sealant Application	See Figure 8-11
Nozzle, Caulking Gun	254	5120-00-673-1885	EA	Sealant Application	See Figure 8-11
Nozzle, Caulking Gun	410	5120-00-801-0949	EA	Sealant Application	See Figure 8-11
Nozzle, Caulking Gun - Bent	410-45	5120-00-055-4063	EA	Sealant Application	
Nozzle, Caulking Gun	420	5120-00-042-6577	EA	Sealant Application	See Figure 8-11

Table 8-1. Common Consumables - Continued

Nozzle, Caulking Gun - Bent	420-45	5120-00-055-4063	EA	Sealant Application	
Nozzle, Caulking Gun	430	5120-00-967-8151	EA	Sealant Application	See Figure 8-11
Nozzle, Caulking Gun - Bent	430-45	5120-00-055-4062	EA	Sealant Application	
Nozzle, Caulking Gun	440	5120-00-773-3791	EA	Sealant Application	See Figure 8-11
Nozzle, Caulking Gun	440-45-3	5120-00-670-1186	EA	Sealant Application	
Nozzle, Caulking Gun	620	5120-00-167-0152	EA	Sealant Application	See Figure 8-11
Nozzle, Caulking Gun	640	5120-00-822-7194	EA	Sealant Application	See Figure 8-11
Nozzle, Caulking Gun	640-45	5120-00-966-5373	EA	Sealant Application	
Nozzle, Caulking Gun	640-30-2-7-8	5120-00-167-0153	EA	Sealant Application	
Nozzle, Caulking Gun	820	5120-00-966-8270	EA	Sealant Application	See Figure 8-11
Nozzle, Caulking Gun - Bent	820-45	5120-00-966-5371	EA	Sealant Application	
Nozzle, Caulking Gun	840	5120-00-966-5372	EA	Sealant Application	See Figure 8-11
Nozzle, Caulking Gun	974	5120-00-775-1670	EA	Sealant Application	
Nozzle, Caulking Gun - Filleting, Duckbill	980	5120-00-055-4055	EA	Sealant Application	
Nozzle, Caulking Gun	1004	5120-00-055-4054	EA	Sealant Application	See Figure 8-11
Nozzle, Injection	C-13117-1	5120-01-100-3679	EA	Sealant Application	3/32"
Nozzle, Injection	C-14117-2	5120-00-954-4995	EA	Sealant Application	1/8"
Nozzle, Injection	C-13117-4	2120-01-100-3681	EA	Sealant Application	3/16"
Nozzle, Caulking Gun - Filleting, Flared	8608	5120-00-966-5381	EA	Sealant Application	4 X 3/8"
Nozzle, Caulking Gun - Filleting, Flat	8607	5120-00-966-8244	EA	Sealant Application	9 X 1/4"
Nozzle, Caulking Gun - Filleting, Straight	987	5120-00-055-4058	EA	Sealant Application	10 X 1/32"
Spatula Set	TS1275-K	5120-00-056-3237	SE	Sealant Application	Set Of 3
Retainer, Filleting Gun	606	5120-00-693-8070	EA	Used with Sealant Gun	Used on 9020 Equipment
Retainer, Filleting Gun	220256	5120-00-693-8069	EA	Used with Sealant Gun	SEMCO 250 Sealant Dispenser
Retainer, Filleting Gun	612	5120-00-693-8071	EA	Used with Sealant Gun	SEMCO 250 Sealant Dispenser
Thermometer, Bi-Metallic	310F	6685-00-996-8899	EA	General Purpose	0° to 300 °F

Fuel Cell Repair Equipment/Material

Table 8-1. Common Consumables - Continued

Buna-N-Nylon Sandwich Material	5200-5187	8305-00-396-1035	YD	Fuel Cell Patch Material	40"
Buna-N- Sandwich Material	PF 10056 or PS 384	9320-00-291-8468	SH	Fuel Cell Patch Material	36 X 36"
Buna-N Top Coat (Nitrile)	MIL-S-4383	8030-00-664-4019	CN	Patch Top Coat	1 Pint
Buna-N Top Coat (Nitrile)	MIL-S-4383	8030-00-664-4954	CN	Patch Top Coat	1 Quart
Buna-N Top Coat (Nitrile)	MIL-S-4383	8030-00-857-3604	CN	Patch Top Coat	1 Gallon
Fabric, Patch Material	FT-227	8305-00-137-2566	YD	Fuel Cell Repair	36 X 36"
Fabric, Sheet Nylon Sandwich	PF10034	8305-00-286-9905	YD	Fuel Cell Repair	
Heating Iron	2F1-3-2572RVH	4920-01-113-1833	EA	Fuel Cell Patch Application	290 Deg F
Heating Iron	2F1-3-2572-1	4920-00-137-6916	EA	Fuel Cell Patch Application	240 Deg F
Hot Patch, Air Foam	53-52003-50	9320-01-187-8461	FT	Fuel Cell Repair	1/4 X 52" X 72 Yds
Coating, Polyurethane	MIL-C-83019	8030-00-241-2498	KT	Protecting coating	1.5 Quarts
Paint, Buna Vinylite Lacquer	3299	8030-00-166-8813	CN	Self-Sealing Fuel Cell Repair, Topcoat	5 Gallons
Sheet, Buna-N	LN878	9230-00-202-1464	YD	Fuel Cell Repair	36 X 1080"
Sheet, Cloth Coated	MIL-C-82255 Type IV	8305-00-244-0310	YD	Fuel Cell Repair	0.025"
Sheet, Rubber	MIL-R-6855	9320-00-180-3259	YD	Fuel Cell Repair	40 X 40"
Stitcher	Horizontal Offset			Local Manufacture	See Figure 8-5
Stitcher	Roller			Local Manufacture	See Figure 8-6
Stitcher	Vertical Offset			Local Manufacture	See Figure 8-7
		Cleaner/Solvents			
Cleaning Solvent	P-D-680. Type I	6850-00-285-8012	DR	Fuel Tank/Cell Cleaning	55 Gallons
Cleaning Solvent	P-D-680. Type II	6850-00-274-5421	CN	Fuel Tank/Cell Cleaning	5 Gallons
Cleaning Solvent	P-D-680. Type III	6850-01-377-1811	CN	Fuel Tank/Cell Cleaning	1 Pint
Cleaning Solvent	MIL-C-38736 Type I (A-A-59281 Type I)	6850-00-538-0929	CN	Fuel Tank/Cell Cleaning	1 Gallon
Cleaning Solvent	MIL-C-87937 Type II	6850-01-339-5228	CN	Fuel Tank/Cell Cleaning	55 Gallons
Cleaning Solvent	MIL-C-87937 Type IV	6850-01-433-0873	CN	Fuel Tank/Cell Cleaning	5 Gallons
Methyl Ethyl Keytone (MEK)	TT-M-261	6810-00-281-2785	CN	Fuel Tank/Cell Cleaning	1 Gallon
Methyl Isobutyl Keytone (MIBK)	ASTM D1153	6810-00-286-3785	CN	Fuel Tank/Cell Cleaning	1 Gallon

Table 8-1. Common Consumables - Continued

Naptha	TT-N-95	6810-00-238-8119	CN	Fuel Tank/Cell Cleaning	1 Gallon
Alcohol (Denatured)	OE760	6810-00-201-0907	CN	General Purpose Solvent	5 Gallon
Alcohol (Ethyl)	MIL-A-6091	6810-00-127-4532	CN		1 Gallon
Alcohol (Isopropyl)	A-A-59282	6810-00-227-0410	CN	General Purpose Solvent	1 Gallon
Tolulene	TT-T-548	6910-00-290-0048	CN	General Purpose Solvent	5 Gallons
Sky Restore made by Aerosafe Products Inc. (888-666-7885), www.aerosafe.com, P.O. Box 4755, Marietta, GA 30061. See website for MSDS.					
Temporary Repair Material					
Click Patch, Hat Shaped	231230	8040-01-107-4932	KT	Fuel Tank Repair	1.25 X 0.675"
Click Patch, Hat Shaped	231232	8040-01-107-3977	KT	Fuel Tank Repair	1.25 X 0.4"
Click Patch, Flat	231255	8040-01-107-3980	KT	Fuel Tank Repair	1.25" Diameter
Click Patch, Flat	231256	8040-01-107-3981	KT	Fuel Tank Repair	1.25" Diameter
Epoxy Tabs	Epoxy Tabs Type O	8030-01-265-2895	BX	Fuel Tank Repair	24 Each
Comp Air D-236 Injector Kit.	D-236	4920-00-485-1213	KT	Fuel Tank Repair	Each
Ethyl Acetate	TT-E-751	6810-00-245-6694	CN		5 Gallons
Pig Putty	MIL-P-8116	8030-00-145-0300 8030-01-436-8318	CN	Fuel Tank Repair	2 Pounds 12 Tubes
Leak Detection Powder	LD-4	6850-01-417-4455	CA	Fuel Leak Detection	6 Ounces
Sealing Compound, Alkydesin (Oyltite Stick)	OlytiteStik	8030-00-935-5841	EA	Fuel Tank Repair	1 Ounce
General Purpose Consumables					
Bag, Electrostatic-Free	MIL-B-117	8105-01-268-4413	BX	Packaging Foam Material	56 X 36"
Bag, Electrostatic-Free	MIL-B-117	8105-01-268-4414	BX	Packaging Foam Material	48 X 48"
Brush	H-B-451	8020-00-721-9646	EA	General Purpose	1.25 X 1"
Brush, Ox Hair	H-B-118	8020-00-224-8006	EA	General Purpose	3/8" W
Brush, Goat Hair	H-B-391	8020-00-245-4522	EA	General Purpose	1" W
Brush, Varnish	H-B-420	8020-00-260-1306	EA	General Purpose	1" W
Brush, Scrub (Stiff Bristle)	H-B-1490	7920-00-619-9162	EA	General Purpose	1.75 X 4.5"
Brush, Paint	H-B-695	8020-00-178-9788		General Purpose	3.063 X 2.50"
Cellophane, Clear	A-A-1742	8135-00-476-5267	RO	General Purpose	6800 X 13"
Fluorescent Dye	MIL-D-81298	6820-00-787-5258 6820-01-386-8609	KT	General Purpose	3 Cans
Leak Detection Compound	MIL-L-25567	6850-00-185-0423	GL	Fuel Leak Detection	1 Gallon
Leak Detection Compound	MIL-L-25567	6850-00-051-5052	DR	Fuel Leak Detection	55 Gallons
Paper, Kraft	A-A-203	8135-00-160-7757	RO	General Purpose	1228 X 2'
Paper, Kraft	UU-P-268	8135-01-145-5241	RO	General Purpose	18" X 500'

Table 8-1. Common Consumables - Continued

Pencil, Aircraft Marker	MIL-P-83953 Type 1 Class B	7510-00-537-6935	EA	Marking Fuel Leaks	Red
Pencil, Aircraft Marker	MIL-P-83953 Type 1 Class B	7510-00-537-6930	EA	Marking Fuel Leaks	Yellow
Pencil, Aircraft Marker	Color Brite, Silver 2101	7510-00-111-6425	EA	Marking Fuel Leaks	Silver
Tongue Compressor	GG-D-226 Type II	6515-00-753-4533	BX	General Purpose	500 Each
Sponge, Cellulose	L-S-00626 Type II Class 1, Size 3	7920-00-559-8463	BX	Fuel Tank Depud-dling	2X4X6" 60 Ea
Skin Protective Compound	PS-411	9850-01-307-8274	TB	Hand Protective Cream	3 Ounces
Skin Protective Cream	P-S411, Type 3	6850-00-244-4892	LB	Barrier Under Gloves	1 Pound
Petroleum	VV-P-236, TY V, CL 2	9150-00-250-0926	CN	General Purpose	1.75 Pounds
Cord, Nylon	MIL-C-5040, Type III	4020-00-240-2146	SP	Fuel Cell Installa-tion	700 Yards
Release Film (My-lar)	L-P-519	9330-00-579-6217	SH	Fuel Cell Repair	24 X 30"
Oil, Lubricating	VV-L-825	9150-00-598-2911	CN	Fuel Cell Preserva-tion	Quart
Oil, Lubricating Grade 1065	MIL-L-6082	9150-01-007-9134	CN	Fuel Cell Preserva-tion	Quart
Phenolphthalein	O-C-265	6810-00-223-7612	BT	Fuel Cell Leak De-tection	100 grams
Ammonium Hy-droxide	A-A-59370	6810-00-222-9643	BT	Leak Test Fuel Cells	80 Ounces
Lubricating Oil	VV-L-825	9150-01-434-8780	CN	General Purpose Lubricating	5 Gallons
Barrier Paper, MIL-PRF-131, MIL-PRF-121, MIL-PRF-22191	None		Roll	Cover Access Pan-els	100 Feet Rolls
Stencil Marking Ink	A-A-208 Type II or IV, Class A			Mark Fuel Cell	

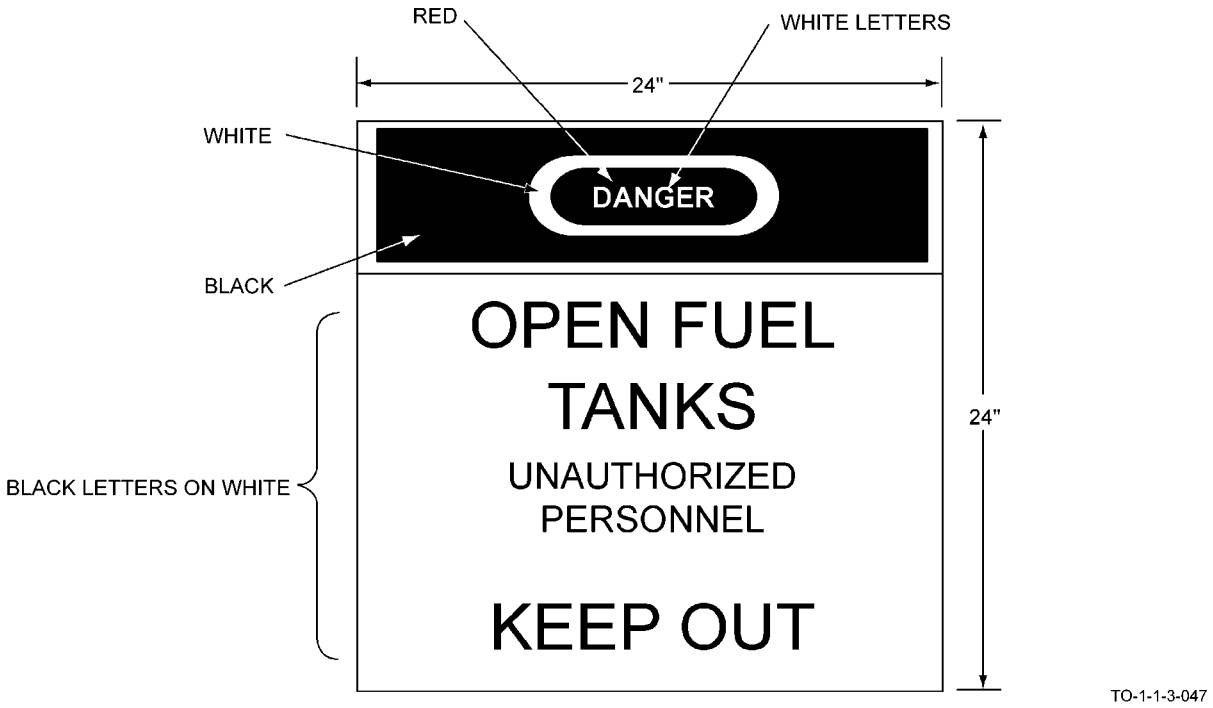

Figure 8-1. Marking of Fuel System Repair Area

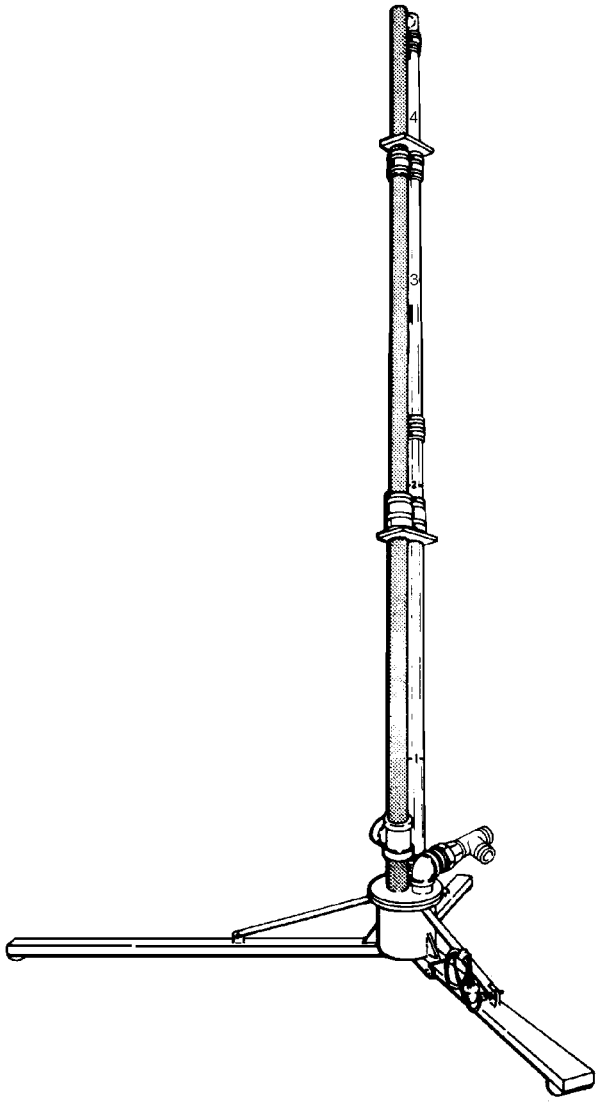

TO-1-1-3-049

Figure 8-2. Water Manometer

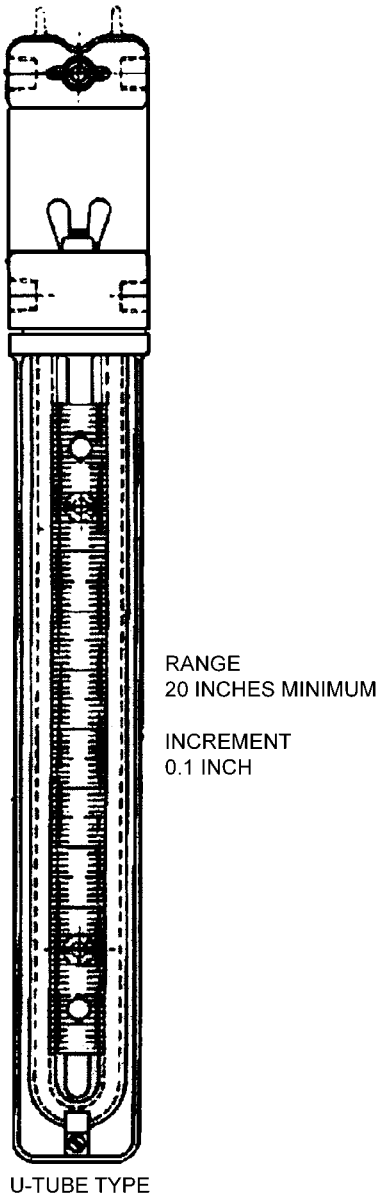

TO-1-1-3-050

Figure 8-3. Typical U-Tube Type Manometer

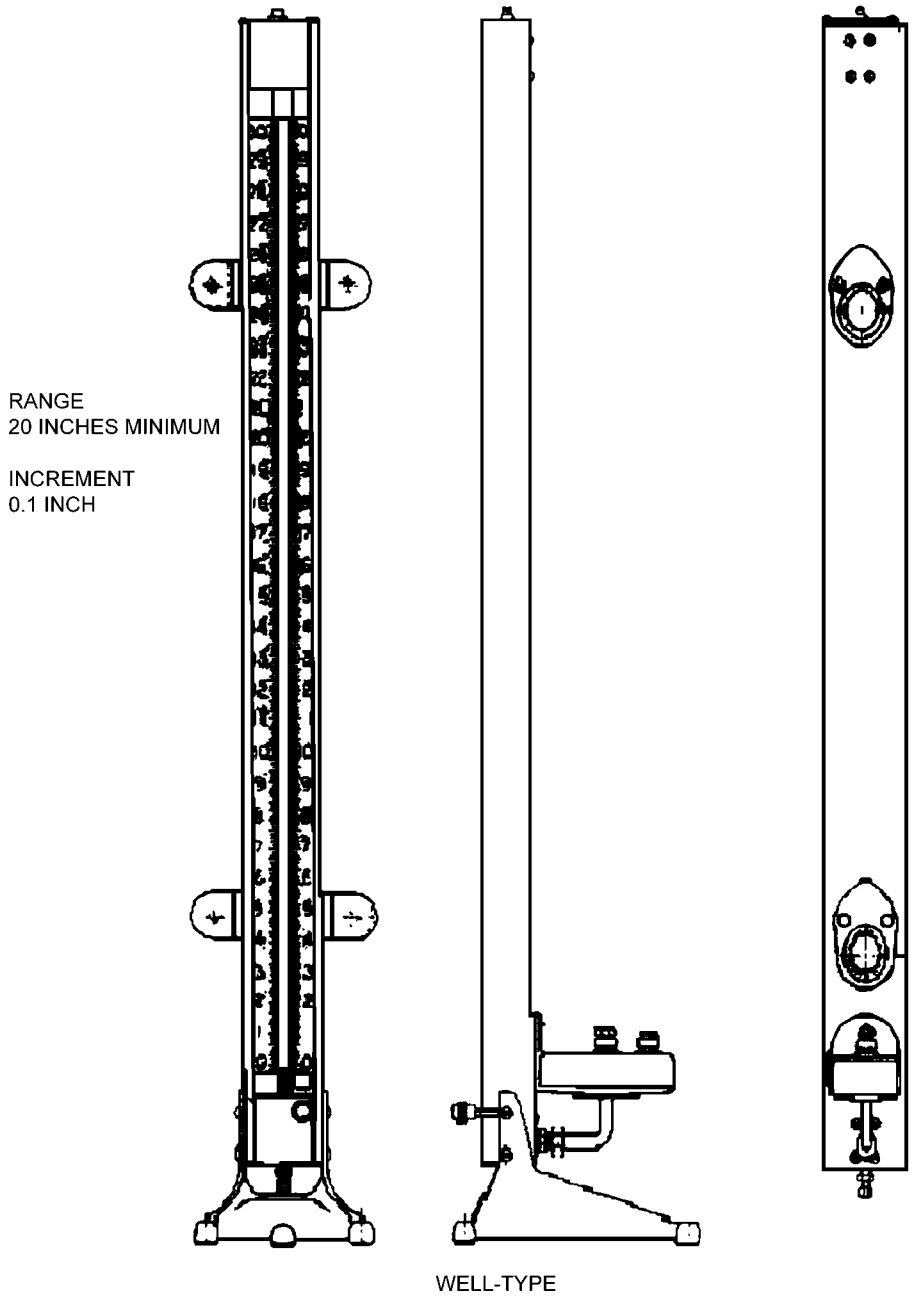

TO-1-1-3-051

Figure 8-4. Typical Well-Type Manometer

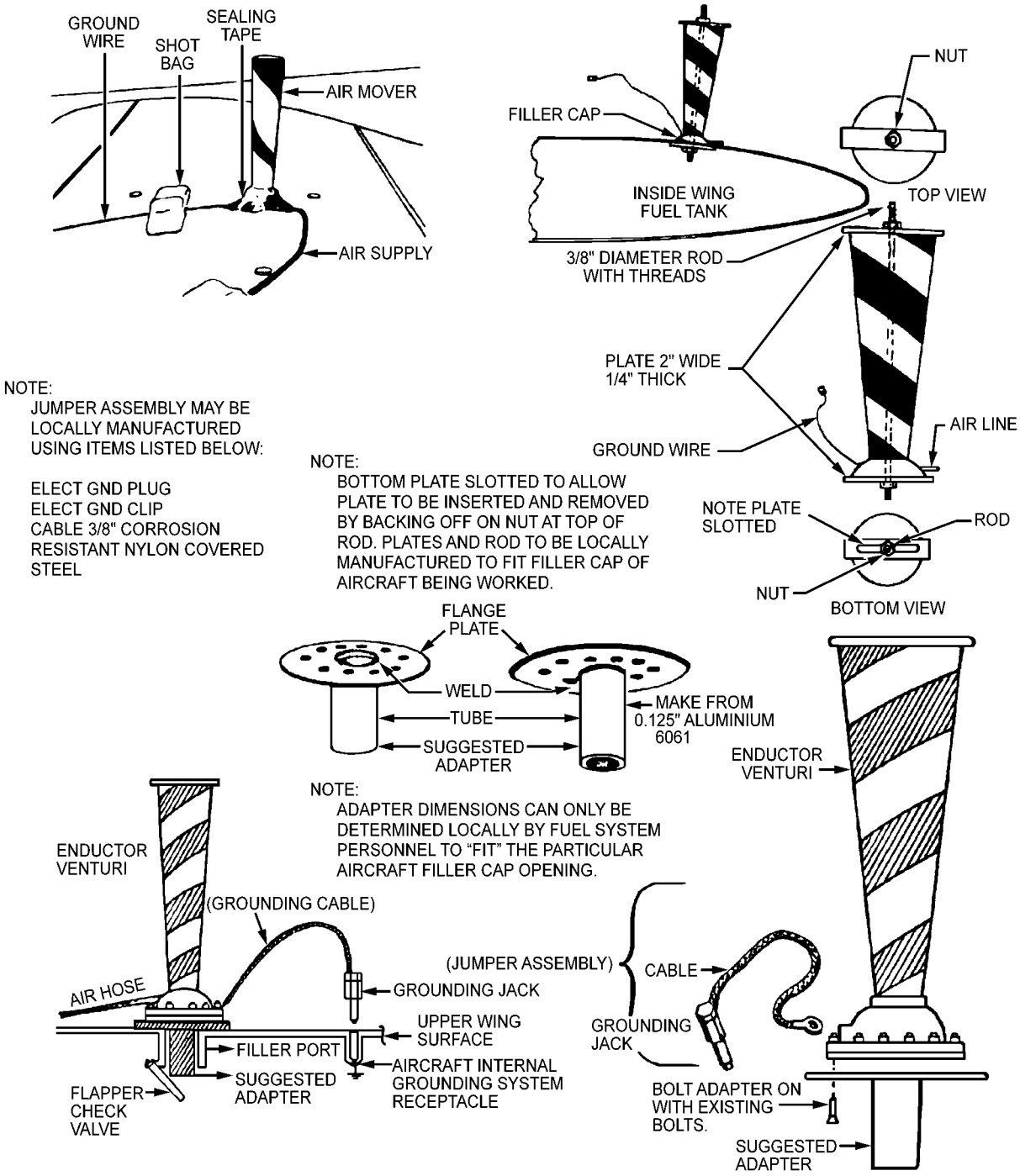

NOTE:
JUMPER ASSEMBLY MAY BE LOCALLY MANUFACTURED USING ITEMS LISTED BELOW:

ELECT GND PLUG
ELECT GND CLIP
CABLE 3/8" CORROSION RESISTANT NYLON COVERED STEEL

NOTE:
BOTTOM PLATE SLOTTED TO ALLOW PLATE TO BE INSERTED AND REMOVED BY BACKING OFF ON NUT AT TOP OF ROD. PLATES AND ROD TO BE LOCALLY MANUFACTURED TO FIT FILLER CAP OF AIRCRAFT BEING WORKED.

NOTE:
ADAPTER DIMENSIONS CAN ONLY BE DETERMINED LOCALLY BY FUEL SYSTEM PERSONNEL TO "FIT" THE PARTICULAR AIRCRAFT FILLER CAP OPENING.

NOTE:
QUICK DISCONNECTS, FITTINGS AND CONTROL VALVES MAY BE USED ON AIR MOVER SUPPL Y LINES. HOWEVER, THE QUICK DISCONNECTS, FITTINGS AND CONTROL VALVES SHALL BE NIOSH APPROVED AND MUST BE INCOMPATIBLE WITH OUTLETS FOR OTHER GAS SYSTEMS TO PREVENT INADVERTENT SERVICING OF AIR LINE RESPIRATORS WITH NONRESPIRABLE GASES OR OXYGEN.

Figure 8-5. Air Mover

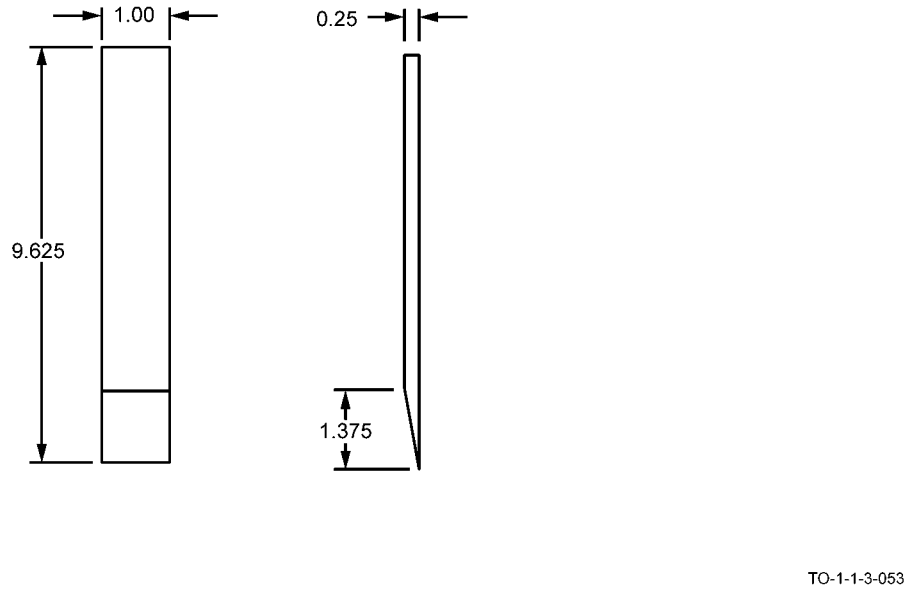

Figure 8-6. Typical Hand Scraper

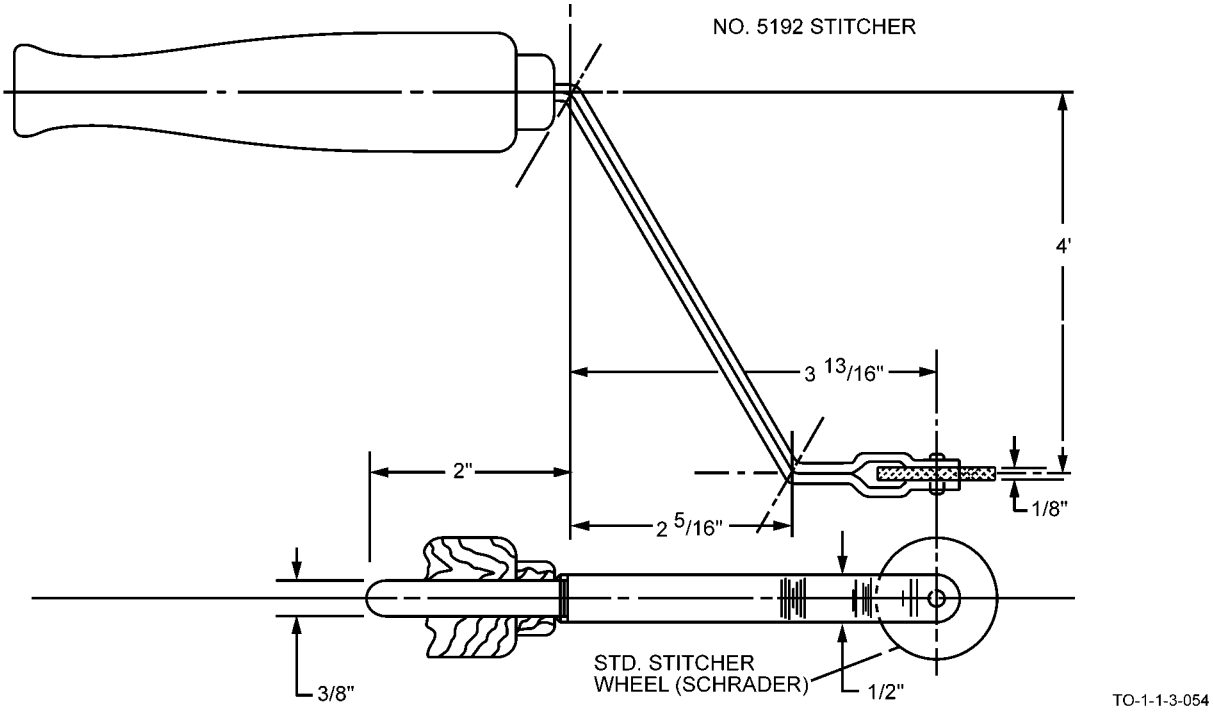

Figure 8-7. Horizontal Stitcher

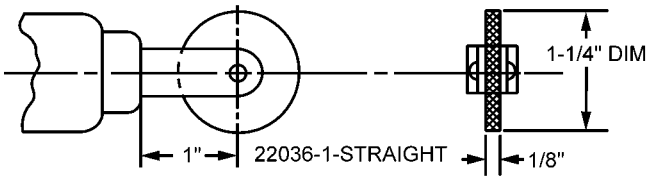

TO-1-1-3-055

Figure 8-8. Stitcher Roller

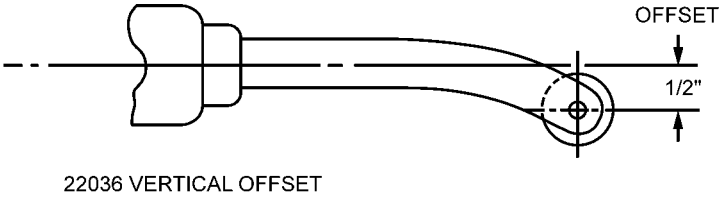

TO-1-1-3-056

Figure 8-9. Vertical Offset Stitcher

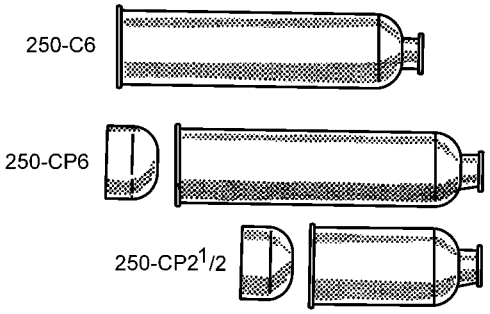

TO-1-1-3-057

Figure 8-10. Sealant Cartridges

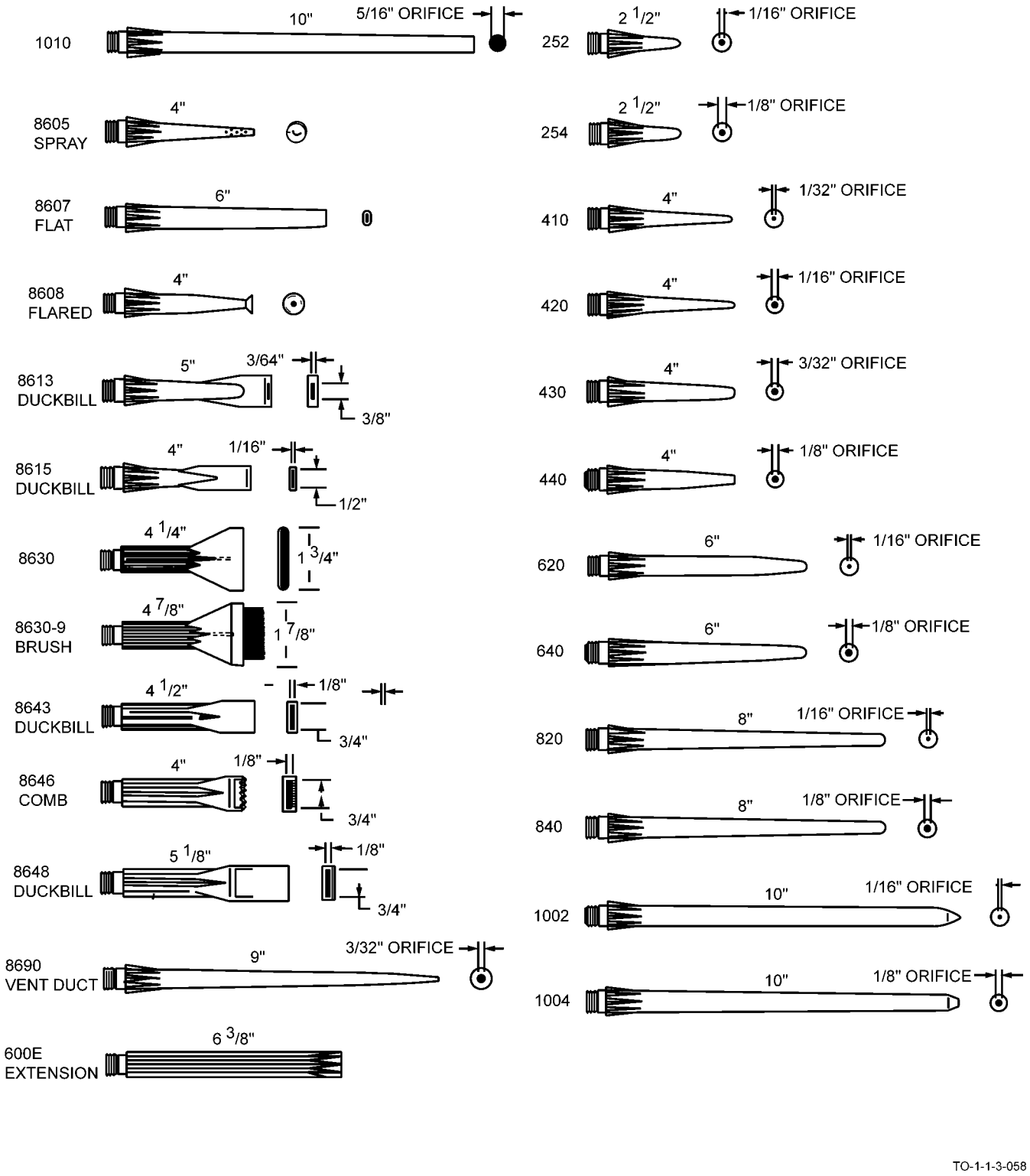

Figure 8-11. Filleting Nozzle

NOTE:

1. PLASTIC CARTRIDGE AND STEEL SAFETY RETAINER DETERMINES CAPACITY. ALL OTHER PARTS ARE IDENTICAL.
2. TOTAL WEIGHT (6 FL OZ GUN) - 15 OZ.
3. LENGTH OVERALL LESS NOZZLE (6 OZ GUN) - 8-1/2.
4. PISTOL GRIP HANDLE MAY BE REMOVED TO CONVERT TO LEVER THROTTLE FOR CONFINED AREAS.

*5. 2-1/2 OZ CAPACITY RECOMMENDED FOR MOST FIELD REPAIRS.

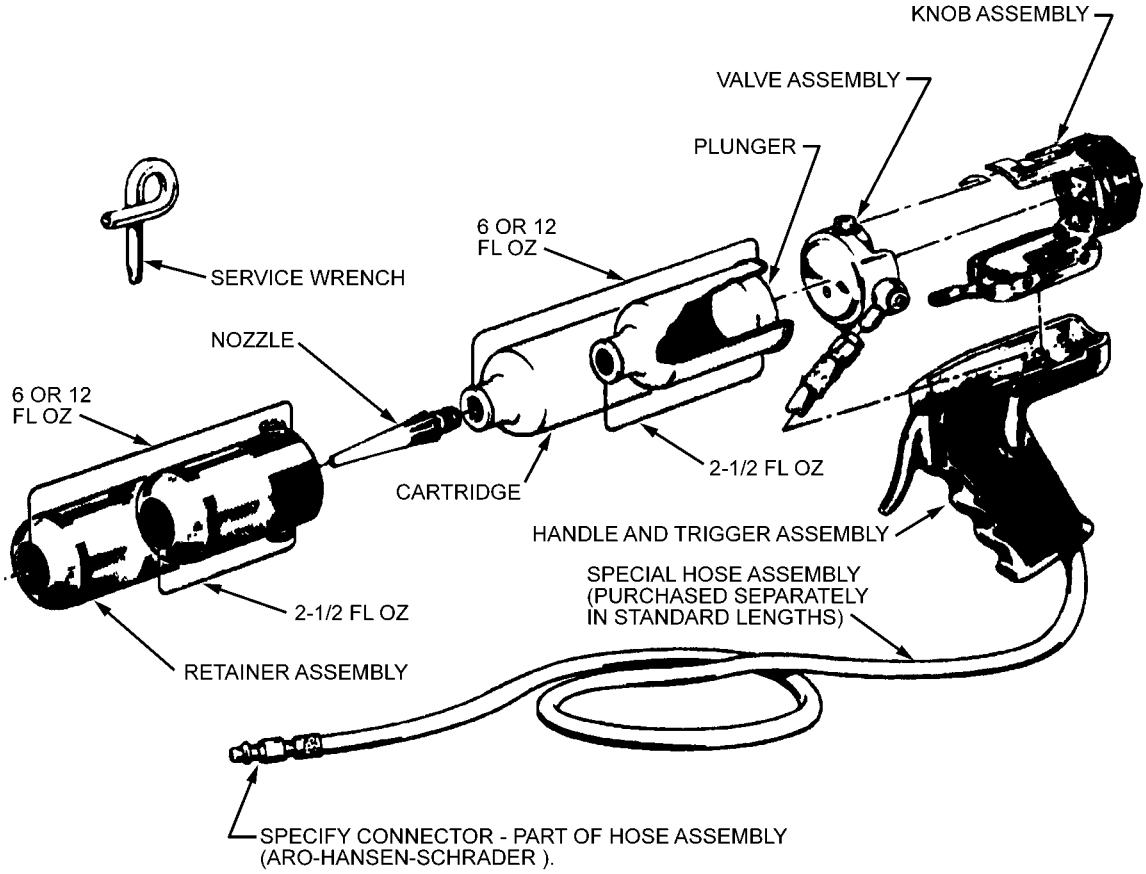

TO-1-1-3-059

Figure 8-12. Filleting Gun

CHAPTER 9
FUEL CELLS

9.1 PURPOSE.

This chapter covers fuel cell inspection, authorized repair methods and procedures.

9.2 GENERAL.

A fuel cell is a flexible bag contoured to the shape of a particular aircraft structural cavity. There are three types of fuel cells; self-sealing, bladder (urethane/vithane), and a combination (self-sealing and bladder).

9.2.1 Item Unique Identification (IUID) Label. Item Part Numbers listed in Table B-1 of Appendix B require IUID label. Visually inspect that IUID label is present and not damaged. Ensure readability of IUID label by using a 2D hand-held electronic reader. If label is not present or is damaged, refer to Drawing 200733803, MIL-STD-130 and applicable references identified in Table B-1 for technical data indicating IUID label creation, location, and installation.

9.3 FUEL CELL CONSTRUCTION.

9.3.1 Self-Sealing Fuel Cells.

9.3.1.1 A self-sealing fuel cell is designed to temporarily seal itself when punctured. The sealing action is facilitated by a chemical and mechanical reaction. The mechanical reaction is the result of the property of the rubber to give under impact, limiting the damaged area to a small hole. The chemical reaction takes place when the dormant rubber sealant in the cell wall comes in contact with the leaking fuel from the puncture. The sealing action reduces the potential of a fire hazard and minimizes the loss of fuel.

9.3.1.1.1 The four primary layers in a self-sealing fuel cell, and function of those layers, are:

a. An inner liner of Buna-N synthetic rubber or rubber coated fabric. The inner liner protects the nylon barrier.

b. A nylon barrier. The nylon barrier contains the fuel and prevents diffusion through the cell wall.

c. A semi-cured natural rubber sealant that remains dormant until it comes in contact with fuel.

d. A retainer of woven cord typically made of nylon, rayon, or cotton. The retainer strengthens the cell and also protects the nylon barrier.

9.3.1.1.2 Self-sealing fuel cells may contain more than four layers but they will fall into one of the general layer classifications above.

9.3.1.2 The standard and lightweight construction is shown in Figure 9-3. In this construction the inner liner is made of nylon. The sealant is placed on the cell in two layers, a layer or layers of cord fabric placed between the two layers of sealant, a layer or layers of cord fabric placed on the exterior of the cell, and an outside lacquer coating which must remain fuel resistant for 72 hours.

9.3.2 Bladder Fuel Cells.

9.3.2.1 Bladder cells are light-weight and are not self-sealing. The four basic types of bladder cells are those constructed of two or more plies of rubber coated fabric, those constructed of a combination of rubber coated fabric and Buna-N gum, those constructed of all nylon fabric, and those constructed of polyurethane coated nylon fabric over a polyurethane sprayed inner liner. There are three primary layers in a bladder cell.

a. An inner liner of Buna-N synthetic rubber or rubber coated fabric. The inner liner protects the nylon barrier.

b. A nylon barrier film. The nylon barrier contains the fuel and prevents diffusion through the cell wall.

c. A fabric retainer of woven cord; usually nylon, rayon or cotton. The fabric material strengthens the cell and protects the nylon barrier.

9.3.2.2 Bladder fuel cells may contain more than the three individual layers but the added layers will fall into one of the three general classifications.

9.3.3 Combination Cells. These cells consist of bladder and self-sealing cell construction. Most are usually self-sealing on the bottom and aft sections only.

9.3.4 Fittings. There are three general types of fittings used on fuel cells.

9.3.4.1 Rubber Face. This fitting has a ring of metal molded into the opening. It may be fully molded rubber or combined rubber and fabric. A seal is made by compression of the rubber faces between the cell and its mating part.

9.3.4.2 Compression. This fitting is used on bladder cells and consist of two metal rings. The cell openings are bolted between the rings to create a seal.

9.3.4.3 Metal-to-Metal. This fitting consist of a metal ring molded into the cell opening, which leaves the seal side of the metal ring exposed. A seal is made by using O-rings between the metal surfaces of the cell fitting and its mating part.

9.4 FUEL CELL HANDLING, PRESERVATION, PACKAGING AND STORAGE.

9.4.1 Fuel Cell Handling.

9.4.1.1 Exercise extreme care when handling fuel cells as they are easily damaged. The following precautions shall be followed.

9.4.1.2 Never fold or unfold a fuel cell until the temperature requirements in TO 00-85A-03-1 are met. If required, use an approved heater to heat the cell and/or weapons system cavity.

9.4.1.3 Do not collapse or fold a cell abusively or by air evacuation. Ensure protective fitting rings and caps are installed when the cell is removed, transported or installed, as required by the weapons system technical order. Additional protection may be provided to beaded fitting cells by installing a split hose over the bead and collapsing the cell over a fiberboard tube with a minimum diameter of four inches.

9.4.1.4 Never lift, move, or carry a cell by its fittings. If strapping material of any type is used to carry or hold the fuel cell to form for ease of removal or installation into a cavity, padding shall be placed between the strapping material and fuel cell where there is a potential for damage from abrasion, compression or puncture.

9.4.1.5 Do not unnecessarily place objects on fuel cells or rest them on sharp objects such as table edges or corners, cavity edges, etc. Fuel cell work surfaces shall be clean, padded and clear of foreign objects.

9.4.1.6 Do not drag or tumble a cell.

9.4.2 Fuel Cell Preservation, Packaging and Storage. If removed from the aircraft for storage or shipping, fuel cells shall be preserved and packaged in accordance with TO 00-85A-03-1. Refer to specific aircraft tech orders and PDM/UDLM work specifications for processing instructions for installed fuel bladders. In rubber or synthetic rubber self-sealing bladder cells, fuel has the tendency to extract the plasticizer from the rubber inner liner of a fuel cell. The loss of plasticizer is not detrimental to a cell as long as fuel remains in the cell. When fuel is drained from the cell, the cell will dry and cracking or checking can occur. To prevent this type of failure, apply a thin coating of a mixture containing 80 percent JP-5, JP-8, Jet A, and Jet A-1 and 20 percent oil, MIL-L-6081 Grade 1010, or VV-L-825, to the interior of the cell. If the cell is to be packaged and turned into supply or remain uninstalled for more than 72 hours apply a thin coat of 100 percent oil, MIL-L-6081 Grade 1010, or VV-L-825 in accordance with TO 00-85A-03-1. Oil may be applied by wiping or fogging. Excess oil shall be wiped-up with cheesecloth.

9.4.2.1 Vithane fuel cells that have been stored for more than a year may shrink. If shrinkage affects the ability to properly install the cell, apply heat (not to exceed 150 °F) and moisture to loosen up the material. Apply heat and moisture by capping off all fittings except the access opening. Place a bucket of water or wet rags inside the fuel cell and position a duct inside the access opening for 4 hours. If this method does not adequately stretch the cell, and the equipment is available, the cell may be soaked in warm water (not to exceed 120 °F) for 2 to 4 hours.

9.4.2.2 Fuel cells that have taken on a crease due to improper folding may be salvaged by placing them in an air-circulating oven set to 150 °F. Pour warm water over the outside and inside of the cell. The heat and moisture will soften the rubber and allow movement without damaging the nylon barrier. After 1 hour, gradually stretch the cell and install internal supports. When the cell is restored to its normal shape, allow the soak to continue for a total of 4 hours at 150 °F. Remove the cell from the oven and let it sit at room temperature for 20 hours before testing and inspection.

9.4.2.3 Self-sealing cells are not collapsed for shipping or storage. They are shipped in their normal configuration.

9.5 FUEL CELL DIAGNOSTIC INFORMATION, CLEANING, AND INSPECTION.

9.5.1 Diagnostic Information. The following information can help prevent incorrect diagnosis of fuel cell leakage.

9.5.1.1 Investigation of reports stating that fuel was seeping through a cell because of pinholes or porous liners revealed the cell was often good, but was saturated with fuel trapped in the cavity. No cell is intended to be completely impervious to fuel from the outside. When fuel is trapped in the cavity, some of the fuel will be absorbed by the outer ply of fabric.

9.5.1.2 JP-type fuels will not evaporate as readily as aviation gasoline. Cell fabric will stay wet for several days. This often causes personnel unfamiliar with cell construction to diagnose the condition as fuel seepage. The area may appear dry and when pressurized will appear to seep. This condition is caused by the internal pressure on the fabric which causes the fuel to ooze to the surface. This condition is called weeping and is not an indication of a leaking cell.

9.5.1.3 Pinholes are sometimes caused by minute imperfections or foreign matter in the cell inner liner. In the coating process, the rubber may not be perfectly smooth, small particles may be embedded in the rubber, or there may be small indentations in the rubber from imperfections in the mold. This may be acceptable if the nylon barrier is not broken.

9.5.1.4 A condition often reported in new cells is delamination. Acceptance standards allow a certain amount of loose liner lap, channel and blistering. Test and service experience prove that these conditions will not affect serviceability if the allowable limits are not exceeded.

9.5.1.5 New cells have been reported as having ozone checked liners. Conditions that make the liners in new cells look deteriorated are almost always minor manufacturing imperfections caused by crazing or cracking of the coating used on the building forms. The outline of the crazing on the molds is easily transferred to the rubber material of the cell.

9.5.1.6 Fried or scarred inner liners are usually found in cells with gum liners. This condition is caused by small amounts of air or solvent vapor being trapped between the liner and the building form. This air or vapor cannot escape

due to the pressures applied during manufacturing and causes depressed areas to be formed on the soft inner liner. This condition will not progress after the manufacturing process is complete.

9.5.1.7 Activation of self-sealing cells may be from either internal or external fuel. Proper evaluation of the cell is required to determine if a pinhole, wicking or external fuel contact has caused the activation.

9.5.1.7.1 Self-sealing cells shall be drained and thoroughly dried as soon as possible after damage is found to prevent excessive activation of the sealant. Drying may be accelerated by placing the cell in a warm area (80 °F) and flowing air through the cell. Higher temperatures will dry the fuel-soaked sealant nearest the damage and trap fuel in the sealant. Trapped fuel will cause separation and breakdown of the sealant. To prevent this condition, spread the edge of the damage slightly with a wood peg to allow the fuel vapors to escape from the sealant. This type of damage may require several days to properly dry.

9.5.1.8 Fuel bubbles that accumulate between the interior surface of the fuel cell and the supplementary metallic supports should not be considered defects provided the structure of the fuel cell remains unbroken.

9.5.2 Cleaning Prior to Inspection. All fuel cells shall be cleaned as necessary inside and outside prior to inspection and testing using general purpose liquid detergent (MIL-C-38736 or P-S-560) or aircraft surfaces cleaning compound (MIL-C-87937). All detergent residues shall be removed with clear water (not to exceed 120 °F). Wiping cloths shall be clean static-free absorbent type. Cells shall be dried thoroughly after cleaning. All metal fittings (with and without o-ring grooves) on the fuel cells shall be cleaned with MEK or MIBK to ensure no foreign matter is present. Fuel cells shall receive an exterior cleaning with P-D-680 (Type I, II, or III).

9.5.3 Fuel Cell Inspections. Fuel cells are an assembly of items made from age-sensitive elastomers that are subject to deterioration by sunlight, heat and other environmental factors. They must be inspected periodically to ensure serviceability.

NOTE

When inspecting combination fuel cells, the criteria for self-sealing and bladder cells shall be used.

9.5.3.1 Fuel cells in storage shall be inspected in accordance with Paragraph 9.12.1.1 or Paragraph 9.12.1.2, as applicable, and tested in accordance with Paragraph 9.6.5 or Paragraph 9.6.6 annually.

9.5.3.2 It is sound maintenance practice to perform a chemical or soap suds test on a fuel cell prior to installation. However, if it can be verified that the fuel cell has been tested in accordance with Paragraph 9.6.5 or Paragraph 9.6.6 within the last 6 months and the pre-installation inspection revealed no questionable defects, testing is not required unless directed otherwise by the applicable weapons system technical data or local policy.

9.5.3.3 Fuel cells removed from the aircraft at field level or during programmed depot maintenance shall be inspected in accordance with Paragraph 9.12.1 or Paragraph 9.12.2, as applicable, prior to installation in the aircraft.

9.5.3.4 If the fuel cell is entered, but not removed from the aircraft, it should be inspected using the criteria in Paragraph 9.12.1.3 or Paragraph 9.13.1.3, as applicable.

9.5.3.5 For fuel cells in storage, the inspection and testing shall be documented on a serviceable tag and AFTO Form 95. The serviceable tag shall be attached to the outside of the crate; the AFTO Form 95 shall be placed inside the crate with the fuel cell. For fuel cells installed on the aircraft, document the inspection on the AFTO Form 95 in the historical file.

9.5.3.6 Mark damaged areas or alignment marks for fittings or patches using a non-waxed silver, white or yellow pencil.

9.6 FUEL CELL TESTING.

9.6.1 Location. Fuel bladders should be tested in an approved fuel cell area. Unless otherwise directed by aircraft specific technical orders, fuel bladder testing does not need to take place in a separate fuel cell room.

9.6.2 Fuel Cell Fittings.

9.6.2.1 Fuel cells that have had the fitting(s) or O-ring surface repaired shall be tested after the repair is complete.

9.6.2.2 Required Materials. Cover plates, air source, manometer, general purpose liquid detergent, water, emery cloth and support fixture.

9.6.2.3 TPS2 Method. The cell fittings may also be tested using the TPS2 helium leak detection method.

9.6.2.4 Required Materials. Cover plates, air source, helium source, TPS2 (Tank Pressurization System 2), emery cloth and support fixture.

9.6.2.5 Procedures.

a. Clean fuel cell fitting(s) and cover plate to ensure no foreign matter is present.

b. Ensure fuel cell has been cleaned in accordance with Paragraph 9.5.2 prior to testing.

c. Adapt TPS2 to cell through cap or cover plate, according to TO 33D2-3-56-21. Apply a maximum of ¼ psi, or ½ psi, in accordance with Table 9-1, Cell Test Pressure.

d. Once pressure reaches the maximum allowable, begin to sample the cell exterior surface with the HWK detector, in accordance with TO 33D2-3-56-11.

e. Mark any defects found and repair accordingly.

9.6.3 Self-Sealing Cells. Test in accordance with instructions provided by aircraft systems manager. Test methods used for bladder cells may indicate a no-leak condition but may not detect defects which will cause activation of the self-sealing fabric.

9.6.4 Bladder Fuel Cells.

WARNING

Failure to ensure proper manometer fluid levels and applicable caps are removed prior to starting a positive or negative pressure test may cause serious damage to the aircraft or personnel injury/death. Ensure that no portions of the manometer are blocked by any FOD nor deposits. See Chapter 8 for a blockage test. The water manometer shall be inspected prior to starting a positive or negative pressure test to ensure it is serviced to the correct fluid level.

When required, perform a helium leak detection, chemical or soap suds test using the following procedures. During pressure check of bladder cells of 1000 or more, allow for pressure to be increased beyond 1/4 psi or 7 inches on the manometer in increments of 2 inches every 30 minutes, up to a maximum of 1/2 psi or 14 inches on the manometer.

Table 9-1. Cell Test Pressure

Capacity	Air Pressure	Water Manometer
0 - 1000 Gallons	1/2 psi	14 inches
1000 Gallons or more	1/4 psi	7 inches
All Vithane Cells	1/4 psi	7 inches

9.6.5 Chemical Test.

9.6.5.1 Required Materials. Non-waxed pencil, cover plates, air source, manometer, ammonium hydroxide, alcohol, authorized cleaning solvent, absorbent cloth or sponge, white cloth (cheese cloth or sheet), 100cc and 200cc measures, two-quart measure, 15-gram measure, water and phenolphthalein crystals.

NOTE

Manometer used to measure the cell test pressure during test may be either digital (intrinsically safe/CSA for approved use in Class 1, Division 1, Groups A, B, C, D environments) or water type with a readout/calibrated accuracy of no less than ±0.5 inches of H_2O of reading.

9.6.5.2 Procedures.

a. If required, support the fuel cell in a suitable fixture or jig.

b. Ensure fuel cell has been cleaned in accordance with Paragraph 9.5.2 prior to testing.

c. Air purge the fuel cell until excessive fuel or oily residue has evaporated.

d. Install locally-fabricated plate with two air fittings. One fitting is used for applying air pressure; the other is for the water manometer.

e. Install cover plates on all remaining fittings except for one large enough to insert absorbent cloth or sponge. If applicable, torque mounting hardware in accordance with the weapons system technical order or TO 1-1A-8.

f. Place absorbent cloth or sponge in remaining open fitting.

g. Pour ammonium hydroxide on absorbent cloth or sponge (100cc for fuel cells less than 1000 gallons, 200cc for all other capacity cells).

h. Install cover plate on last open fitting. If applicable, torque mounting hardware in accordance with the weapons system technical order or TO 1-1A-8.

WARNING

Failure to ensure proper manometer fluid levels and applicable caps are removed prior to starting a positive or negative pressure test may cause serious damage to the aircraft or personnel injury/death. Ensure that no portions of the manometer are blocked by any FOD nor deposits. See Chapter 8 for a blockage test. The water manometer shall be inspected prior to starting a positive or negative pressure test to ensure it is serviced to the correct fluid level.

i. Connect air source and manometer to the locally-fabricated plate. Inflate cell to applicable pressure in accordance with Table 9-1. Maintain appropriate air pressure in the fuel cell for 1 to 2 hours before testing.

j. Prepare leak detection solution. Mix 15 grams phenolphthalein crystals into two quarts of water and then add two quarts of alcohol.

k. Soak a large clean white cloth in the solution and wring out the excess. Verify cloth turns red when contacted by ammonium hydroxide.

l. Verify cover plates are not providing false indication of a leak by temporarily placing cloth around each plate.

m. Spread the cloth over an area of the fuel cell and smooth it out. Leave it in place long enough to verify no red spots appear. The appearance of a red spot indicates a possible leak.

n. If a leak is indicated, clean the cloth by re-soaking it in the solution and then place it over the suspect area again to verify the leak.

o. Mark leaks with a non-waxed pencil.

p. Move cloth and repeat step l through step n until the entire surface of the fuel cell has been tested.

NOTE

The test solution and cloth remain usable as long as they are kept clean.

q. Deflate fuel cell and remove ammonium hydroxide-soaked absorbent cloth or sponge and cover plates.

r. Purge fuel cell to remove ammonium hydroxide vapors.

s. Clean all metal surfaces with an authorized cleaning solvent to prevent corrosion.

9.6.6 Soap Suds Test.

9.6.6.1 Required Materials.

WARNING

Failure to ensure proper manometer fluid levels and applicable caps are removed prior to starting a positive or negative pressure test may cause serious damage to the aircraft or personnel injury/death. Ensure that no portions of the manometer are blocked by any FOD nor deposits. See Chapter 8 for a blockage test. The water manometer shall be inspected prior to starting a positive or negative pressure test to ensure it is serviced to the correct fluid level.

Non-waxed pencil, cover plates, air source, manometer, water and general purpose liquid detergent.

NOTE

Manometer used to measure the cell test pressure during test may be either digital (intrinsically safe/CSA for approved use in Class 1, Division 1, Groups A, B, C, D environments) or water type with a readout/calibrated accuracy of no less than ±0.5 inches of H_2O of reading.

9.6.6.2 Procedures.

a. Ensure fuel cell has been cleaned in accordance with Paragraph 9.5.2 prior to testing.

b. Install locally-fabricated plate with two air fittings. One fitting is used for applying air pressure; the other is for the water manometer.

c. Install cover plates on all remaining fittings. If applicable, torque mounting hardware in accordance with the weapons system technical order or TO 1-1A-8.

d. Connect air source and manometer to the locally-fabricated plate. Inflate cell to applicable pressure in accordance with Table 9-1. Maintain appropriate air pressure in the fuel cell for 1 to 2 hours before testing.

e. Mix one cup of general purpose liquid detergent and one gallon of water.

f. Apply solution to entire fuel cell, specific repair area or suspect leak, as required. Check for bubbles.

g. Verify repair or mark leaks with a non-waxed pencil.

h. Deflate fuel cell and remove cover plates. Rinse soap residue from cell using clean water.

9.6.6.3 Helium Leak Detection Test.

9.6.6.4 Required Materials. Cover plates, air source, helium source, TPS2 (Tank Pressurization System 2), emery cloth and support fixture.

9.6.6.5 Procedures.

a. Adapt TPS2 to cell through cap or cover plate, according to TO 33D2-3-56-21.

b. Apply a maximum of ¼ psi, or ½ psi, in accordance with Table 9-1, Cell Test Pressure.

c. Once pressure reaches the maximum allowable, begin to sample the cell exterior surface with the HWK detector, in accordance with TO 33D2-3-56-11.

d. Mark any defects found and repair accordingly.

9.6.6.6 Hydrogen-Nitrogen Leak Detection Method. The 5% hydrogen-95% nitrogen detection method is the most sensitive method of leak detection. The gas mixture is non-corrosive and due to the extremely minute size of the hydrogen molecule, it can pass through the smallest of leak paths. When the gas mixture pressure is applied to one end of a leak path, it will travel through the leak path and can be detected, on the opposite end. There are several recently-developed devices that can be used to accomplish leak detections with the hydrogen-nitrogen gas mixture. These are the Sensistor H2000, Sensistor Extrima, Trace 101, and the Hytracker, manufactured by Aerowing. Except for the H2000, these devices are intrinsically-safe. Use of the H2000 is subject to the restrictions in paragraph 2.7.5.6.

9.6.7 Blow Back.

9.6.7.1 General. The blow back procedure is accomplished by applying a solution of general purpose liquid detergent and water to the suspected leak source and then directing air pressure using an air nozzle into the suspected leak exit point. Bubbles will appear in the leak detection compound when air enters the leak path.

9.6.7.2 Required Equipment and Materials. Non-waxed pencil, air source, nozzle, water and general purpose liquid detergent.

9.6.7.3 Procedures.

a. If required, support the fuel cell in a suitable fixture or jig.

b. Ensure fuel cell has been cleaned in accordance with Paragraph 9.5.2 prior to testing.

c. Air purge the fuel cell until excessive JP-5, JP-8, Jet A, or Jet A-1 or oily residue has evaporated.

d. Inspect fuel cell in accordance with Paragraph 9.12 and mark suspected leak areas on interior or exterior of cell.

e. Mix one cup of general purpose liquid detergent and one gallon of water.

f. Apply solution to suspected leak source on interior of fuel cell.

g. Apply air pressure using a nozzle to the suspected external leak exit point on cell. The nozzle should be floated across the surface while kept approximately one-eighth inch from the surface and moved around to introduce air into the exact leak exit point. Depending on the distance between the internal leak source and the external leak exit point, the air pressure may need to be varied from 1 to 10 psi maximum to locate the fuel leak.

h. Closely monitor the solution for air bubbles.

i. The procedure may be used in reverse with nozzle on internal sources and solution on exterior points.

j. Mark leaks with a non-waxed pencil.

k. Rinse soap residue from cell using clean water.

9.7 FUEL CELL REPAIRS.

The purpose of fuel cell repair is to return a cell to a serviceable condition, to restore its ability to carry the maximum load permitted and to allow the cell to perform all functions for which it is designed.

9.7.1 Repair of Installed Cells. Fuel cells may be repaired in the aircraft. The decision should be based on availability of spares and probability of undetected leaks.

9.7.1.1 The following defects may be repaired while the fuel cell is installed; loose supports or hangars, blisters, loose seams or patches, and weather-ozone checking when cords are not damaged.

9.7.2 Repair Capability Restrictions.

9.7.2.1 Each activity is encouraged to repair all fuel cells to the fullest extent possible. Repair capability will be based on tools, equipment, facilities, skills, frequency of each repair, and mission requirements.

9.7.2.2 The following repairs are usually accomplished at the field level.

a. Pinhole damage.

b. Closed hole or slit type damage.

c. Blister repair.

d. Loose seams or patches.

e. Weather-ozone checking requiring a patch less than 12 inches square.

f. Self-sealing cell hole damages less than three inches in diameter.

g. Corrosion treatment.

9.7.2.3 The following repairs are generally best performed at depot or contractor facilities:

a. Self-sealing cell repairs greater than three inches in diameter.

b. Repair or replacement of hangars or straps.

c. Repair or replacement of lacing ferrules.

d. Repair or replacement of fittings.

e. Corner repairs.

f. Extensive weather-ozone checking.

9.7.2.4 The following conditions warrant condemnation of the cell upon approval from the system manager.

a. Self-sealing cell sealant activation that exceeds two hundred square inches or extends into a corner or step off area.

b. Damage in an awkward location making patch roll down impossible.

c. Weather-ozone checking of the inner liner that exceeds five percent of the total surface area or which requires a patch larger than 36 inches square, or equivalent area.

9.7.2.5 After depot repair is accomplished on a rubber or vithane fuel cell, stencil ″Inspected, Repaired, Tested and Oiled at (depot facility name) in MM/YYYY.″ The lettering will be 0.5 inch high and applied using stencil marking ink. Information will be placed near the original markings.

9.8 APPLICATION OF LACQUER FINISH COAT.

NOTE

Application of lacquer may mask fuel cell leak sources and shall not be applied over patches/cell until testing has been accomplished and repairs have been confirmed.

9.8.1 An exterior lacquer finish coat is optional except when specified by weapons system managers/program offices or weapons system technical orders.

9.8.2 Required Materials. Buna Vinylite lacquer, brush and lacquer solvent.

9.8.3 Procedures.

a. Ensure fuel cell has been cleaned in accordance with Paragraph 9.5.2 prior to applying lacquer.

b. Moderately thin lacquer if necessary.

c. Apply one coat by brush and allow it to dry. Do not apply lacquer to fittings.

9.9 FUEL CELLS REPAIRED BY AN APPROVED CONTRACTOR.

Fuel cell repairs shall only be accomplished by approved sources and in accordance with this technical order and other contractual requirements. Replacement fuel cells, other than those in the supply system shall be obtained from a source approved by Contracting. When depots outsource fuel cell repair to civilian contractors, the contractor representative shall indicate in writing the qualified source of repair.

9.10 FUEL CELL CAVITY INSPECTION.

9.10.1 Fuel cell cavities shall be inspected in accordance with the weapons system technical order prior to installing a fuel cell. If specific inspection criteria does not exist, the following information below shall be used:

a. Inspect the cell cavity for dirt, grease and other foreign matter. Clean as necessary.

b. Inspect fuel cell fitting mating surfaces and connections for damage, cracks, scratches or distortions that could cause a leak. Clean surfaces as required with an authorized cleaning solvent. Repair as necessary.

c. Inspect cavity for nicks, burrs or sharp edges that could damage the fuel cell. Areas shall be smoothed out in accordance with the applicable weapons system technical order prior to installing the fuel cell.

d. Inspect vents, interconnects, manifolds, lines and clamps to ensure they are properly positioned as required by the weapons system technical order.

e. Inspect backing boards for cracks, chipping, crazing, or other damage which might damage the fuel cell. Replace backing boards as required.

f. Inspect cell attach points for damage or missing hardware. Repair or replace as required.

g. Inspect cavity for corrosion. Corrosion shall be treated in accordance with TO 1-1-691.

9.10.2 Lacing Cords and Knots. Some fuel cells are held in place inside cavities by lacing cords secured to tie off points. Figure 9-34 illustrates the proper method for preparing the ends of the lacing cord. Figure 9-35 illustrates the proper method for tying knots in the lacing cords.

9.11 FUEL CELL DOCUMENTATION.

9.11.1 Document the AFTO Form 95 with the following information whenever a fuel cell is installed: installation date, cell location, part and serial number, manufacturer's name and cell manufactured date, repair source, description and date.

9.11.2 Fuel cell AFTO Form 95 shall be maintained in the section's historical file until the fuel cell is removed from the aircraft. The AFTO Form 95 shall accompany the cell whenever it is shipped to another destination.

9.12 INSPECTION AND REPAIR OF BLADDER CELLS.

9.12.1 INSPECTION.

9.12.1.1 Interior Inspection Criteria for New/Removed Cells.

a. Loose Liner at Throat of Fitting. One-half inch looseness in width around circumference at throat of fitting, except Firestone construction on which 1/16 inch edge looseness is allowable (Figure 9-6). Vertical edge looseness or the separation of rubber material (fillet) from the vertical surface around the entire metal flange is acceptable. This applies also to American Fuel Cell and Coated Fabrics Co. (AMFUEL).

b. Edge Looseness at Liner Lap. One-quarter inch width if one inch bond is maintained between laps, except Firestone construction 1052-6 on which 1/16 inch edge looseness is acceptable.

c. Edge Looseness on Liner Reinforcements (Corner Patches and Chaffing Patches). One-half inch maximum looseness if loose area does not exceed 15 percent of patch total area. Blisters or separations other than in edge area allowable up to 15 percent of total area.

d. Looseness under Cemented Components such as Attaching Straps, Baffle Shoes, etc. 15 percent of individual areas if one-quarter inch bond is maintained around edge.

e. Blisters between Fitting Flange and Adjacent Ply. One-half inch maximum dimension; maximum two per lineal foot and two per fitting if one inch bond is maintained (Figure 9-6).

f. Damaged Coating on Accessories (Metal, Rubber or Wood). Acceptable if corrosion or other deterioration is not present. Corrosion treatment shall be accomplished in accordance with TO 1-1-691.

g. Checking due to ozone of Buna rubber (Figure 9-10). Not acceptable.

h. Channels between Liner Laps. One inch width by one inch length maximum dimension; one per liner foot with a maximum of five in any eight feet length of splice (Figure 9-8).

i. Blisters between Plies. One inch maximum dimension; minimum three inch bond between blisters, maximum one per square foot.

j. Channels in Liner Laps. One-quarter inch by one inch maximum dimension with a maximum of one in any five liner feet of splice (Figure 9-8).

k. Weather Checking on Fabric. Not acceptable.

l. Channels around Entire Outer Edge of Fitting Flange. One-quarter inch maximum width around fitting flange (Figure 9-6).

m. Buffing through Inner-Liner. Not acceptable.

n. Exposed Fabric. Acceptable if exposed fabric has no damaged cords.

o. Delamination between Plies. One inch maximum dimension; one per five square feet of area, minimum six inch solid bond between delaminations.

p. Cuts, Holes, or Tears in Inner-Liner. Not acceptable.

9.12.1.2 Exterior Inspection Criteria for New/Removed Cells.

a. Skim Coat Blisters. Acceptable.

b. Lap Splice Edge Looseness. One-quarter inch by three inch maximum dimension with no more than one per linear foot if one inch bond is maintained.

c. Loose or Damaged Hangar Straps or Hangar Attaching Points. Acceptable, up to 15 percent of component area if one-quarter inch solid bond is maintained around edge (Figure 9-13).

d. Loose Tapes, Corner Patches or Outside Non-Load Carrying Accessories. One-half inch maximum allowable looseness if it does not exceed 25 percent of total area.

e. Skim Coat off Outer Ply. Acceptable, if cords or fabric are not cut or broken.

f. Mislocated, Blistered, Split, or Weather Checked Tape. Acceptable; mission tape to be replaced.

g. Blisters or Looseness between Labels or Decals and Body of Cell. Acceptable.

h. Weather Checked or Surface Imperfections in Outer Ply or Reinforcements. Acceptable, if fabric not damaged or broken.

i. Blistered, Loose or Missing Lacquer Coating. Acceptable.

j. Blisters between Fitting Flange and Adjacent Ply. One-half inch maximum dimension; maximum of two per linear foot and two per fitting if one inch bond is maintained (Figure 9-6).

k. Delamination between Plies. One inch maximum dimension; one per five square feet of area in any five foot area; minimum six inch solid bond between delaminations.

l. Blisters between Outer Ply Laps. One-half inch width by one inch length maximum dimension; one per five linear feet of splice with a maximum of five in any five foot length of splice.

m. Blisters between Plies in Cell Panels. One-half inch maximum dimension; minimum of six inch bond between blisters and no more than one per square foot of cell area.

n. Channels in Outer Ply Laps. One-quarter inch width entire length of lap.

o. Separation from Fitting Fabric Flange. A maximum of one-quarter inch separation of cell wall from the fitting fabric flange is acceptable provided one inch bond is maintained. If fitting fabric flange is less than one inch in size, 100 percent bond must be maintained.

p. Looseness around Outer Fitting Flange. One-quarter inch maximum around fitting flange (Figure 9-6) if one inch bond is maintained. Vertical edge looseness or the separation of rubber material (fillet) from the vertical surface around the entire metal flange is acceptable.

q. Damage through any Cord or Fabric Ply. Not acceptable.

r. Holes in Inner Liner. Not acceptable; confirm by chemical test.

9.12.1.3 Interior Inspection Criteria for Installed Bladder Cells.

a. Loose Liner at Throat of Fitting except Sump Type and Three-Plane Fittings. One-half inch looseness in width around circumference at throat of fitting, except

Firestone construction on which 1/16 inch edge looseness is allowable if one inch bond is maintained (Figure 9-6). Vertical edge looseness or the separation of rubber material (fillet) from the vertical surface around the entire metal flange is acceptable.

b. Loose Collar at Throat of Sump-Type and Three Plane Fittings. One-quarter inch maximum looseness (Figure 9-14 and Figure 9-15).

c. Edge Looseness at Liner Lap. One-quarter inch width if one inch bond is maintained between laps, except Firestone construction 1052-6 on which 1/16 inch edge looseness is acceptable.

d. Edge Looseness on Liner Reinforcements (Corner Patches and Chaffing Patches). One-half inch maximum looseness if loose area does not exceed 25 percent of patch total area. Blisters or separations other than in edge area allowable up to 25 percent of total area.

e. Looseness Under Cemented Components such as Attaching Straps, Baffle Shoes, etc. 25 percent of individual areas if one-quarter inch bond is maintained around edge.

f. Blisters between Liner and Adjacent Ply. One-half inch maximum dimension; maximum two per liner foot and three per fitting if one inch bond is maintained (Figure 9-6).

g. Damaged Coating on Accessories (Metal, Rubber or Wood). Acceptable if corrosion or other deterioration is not present. Corrosion treatment shall be accomplished in accordance with TO 1-1-691.

h. Weather Checking. Not acceptable.

i. Blisters between Liner Laps. One-half inch maximum dimension; maximum of five in any five feet length of splice with a minimum of six inch bond between blisters (Figure 9-8).

j. Blisters between Plies. One and one-half inch maximum dimension; minimum six inch bond between blisters, maximum one per square foot of cell area.

k. Channels in Liner Laps. One-quarter inch by three inch maximum dimension with a maximum of one in any five linear feet of splice (Figure 9-6).

l. Channels around Entire Outer Edge of Fitting Flange. One-quarter inch maximum width around fitting flange (Figure 9-6).

m. Damaged Coating on Accessories (Rubber, Metal, or Wood). Acceptable, if corrosion is not present.

n. Exposed Fabric. Acceptable if exposed fabric has no damaged cords.

o. Split or Damaged Corner Reinforcements. Acceptable.

p. Cuts, Holes, or Tears in Inner-Liner. Not acceptable.

q. Delamination between Plies. One and one-half inch maximum dimension; one per five square feet of area, minimum six inch solid bond between delaminations.

r. Broken Stiffeners or Supports. Not Acceptable.

9.12.1.4 Exterior Inspection Criteria for Installed Bladder Cells. Only accessible portions of the fuel cells will be inspected; cells shall not be removed from the aircraft for inspection.

a. Skim Coat Blisters. Acceptable

b. Loose or Damaged Hangar Straps or Hangar Attaching Points. Acceptable, up to 25 percent of component area if one-quarter inch solid bond is maintained around edge (Figure 9-13).

c. Loose Tapes, Corner Patches or Outside Non-Load Carrying Accessories. One-half inch maximum allowable looseness if it does not exceed 20 percent of total area

d. Lap Splice Edge Looseness. Three-eighths inch by three inch maximum dimension, no more than five per linear foot.

e. Skim Coat off Outer Ply. Acceptable, if cords or fabric are not cut or broken.

f. Mislocated, Blistered, Split, or Weather Checked Tape. Acceptable.

g. Blisters or Looseness between Labels or Decals and Body of Cell. Acceptable.

h. Weather Checked or Surface Imperfections in Outer Ply or Reinforcements. Acceptable, if fabric not damaged or broken.

i. Blistered, Loose or Missing Lacquer Coating. Acceptable.

j. Damage through any Cord or Fabric Ply. Not acceptable.

k. Delamination between Plies. One and one-half inch maximum dimension; one per five square feet of area in any five foot area; minimum three inch solid bond between delaminations.

l. Blisters between Fitting Flange and Adjacent Ply. One-half inch maximum dimension; maximum of two per linear foot and three per fitting if one inch bond is maintained (Figure 9-6).

m. Blisters between Outer Ply Laps. One and one-half inch maximum dimension; two per linear feet of splice with a maximum of five in any five foot length of splice.

n. Blisters between Plies (in Cell Panels). One and one-half inch maximum dimension; minimum of six inch bond between blisters and no more than one per square foot of cell area

o. Channels in Outer Ply Laps. One-half entire length of lap if one inch bond is maintained on outer edge.

p. Channels around Entire Edge of Fitting Flange. One-quarter inch maximum width around fitting flange (Figure 9-6).

9.12.2 REPAIR.

9.12.2.1 Support Equipment.

9.12.2.1.1 Buffing Band. These bands are for buffing arbors and are provided in various grits.

9.12.2.1.2 Fuel Cell Buffers. These buffers are used for heavy buffing such as removing fitting flanges, buffing self-sealing cells, buffing light-weight cells and finishing work on beads, etc.

9.12.2.1.3 Buffing Stone. These grindstones are used in buffing bladder cells and fitting flanges.

9.12.2.1.4 Horizontal Offset Stitcher. This stitcher is used in patch repair of fuel cells. The offset provides a means of stitching patches in corners. The small wheel provides the repairman close contact with step off areas. (See Figure 8-7.)

9.12.2.1.5 Roller Stitcher. This stitcher is used to apply patches in thin type cell or other areas in which a short stitcher is desired. (See Figure 8-8.)

9.12.2.1.6 Vertical Offset Stitcher. This stitcher is used to accomplish patch installation in confined areas. (See Figure 8-9.)

9.12.2.1.7 Hot Knife Blade. A locally manufactured item used in fuel cells to remove fittings and trim sealants. (Ref. USAF drawing 61B25215.)

9.12.2.2 Types of Damages and Repairs.

9.12.2.2.1 Pinhole Type Damages. A pinhole type damage which penetrates the nylon barrier will require an inside patch. A patch will not be required on the cell retainer unless the cell has been sharply creased in the area of the leak or the retainer cords are damaged.

9.12.2.2.2 Repairing Weather-Ozone Checked Inner-Liners. Repair cells with weather-ozone checked inner-liners that do not exceed a maximum of five percent of the total surface of the cell or do not exceed 36 by 36 inches or equivalent for any one patch in accordance with Paragraph 9.12.2.2.2 and Paragraph 9.16.2.

9.12.2.2.3 Blister Damage. A blister is caused by trapped air between the liner and barrier, fabric/Buna-N gum and the nylon barrier, or layers of nylon in the nylon barrier. Pattern, location, size and leakage are the main factors affecting the cell. Blisters on the bottom and lower sides of the cell are subject to more pressure from fuel than those in the top and upper sides of the cell. Blisters equivalent to one-half inch square are not detrimental and do not need to be repaired; however, if two or more are found within a six inch square area, they shall be repaired in accordance with Paragraph 9.16.3.

9.12.2.2.4 Corner Repairs. Pinhole leaks in irregular corners less than 90 degrees shall be repaired with small patches, one-half inch in diameter or larger, to facilitate application without wrinkles as per Paragraph 9.12.2.2.4 and Paragraph 9.16.7.

9.12.2.2.5 Inside/Outside Repairs. Cells with Buna liners shall be repaired with Buna-N sandwich material. Cells with fabric liners shall be repaired with nylon sandwich. If nylon sandwich is not available, Buna-N sandwich material may be used.

9.12.3 Required Materials. Buna-N sandwich material, Buna Nylon material, emery cloth, an authorized cleaning solvent, cement, stiff bristle brush, clean absorbent lint-free cloth, heater or RCD (Rapid Curing Device), non-waxed pencil, vacuum cleaner, hand roller, air foam hot patch.

9.12.4 Procedures.

a. Support the cell, if required, in the area around the damage so that the edges will be aligned properly in their natural positions (Figure 9-17).

b. Mark the area two inches in all directions from the damage on the inside of the cell and two and one-half inches on the outside with a non-waxed pencil.

NOTE

As a minimum, one patch shall be applied to the inside and outside of the cell for damage less than three inches. Two patches shall be applied to the inside and outside of the cell for damage larger than three inches.

c. Cut a patch from the applicable repair material to extend one and one-half inches from the edge of the damage in all directions for an inside repair and two inches from the edge of the damage in all directions for an outside repair. Shears shall be tilted during cutting to achieve a beveled edge. The patch edges shall be a smooth rounded outline.

d. If two patches are required, the second patch shall be one inch larger in all directions than the first. The edges of the first patch shall be "feathered" so as to enable better adhesion and to prevent the formation of a channel between the two patches.

e. Buff the cell and the contact side of each patch to be applied by hand using a medium-grit emery cloth or with an air-driven power buffer using a 320-grit surface. Buff the cell one-quarter inch beyond the largest patch to be applied. Buffing shall be sufficient to remove all gloss, leaving the surface of the material covered with fine scratches. Exercise caution when buffing the interior or exterior of fuel cells to ensure the fabric is not damaged.

f. Thoroughly clean the cell and each patch to be applied with lint-free cheesecloth moistened with an authorized cleaning solvent immediately before cementing. Do not touch the surfaces after they've been cleaned since skin can leave behind an oil film that will prevent proper adhesion.

g. Apply cement in accordance with the manufacturer's instructions. If manufacturer's instructions are not available, apply three coats of cement to the fuel cell and first patch to be applied; allow each coat to dry for approximately 30-45 minutes. Apply each coat of cement in an opposite cross pattern. If the cement is allowed to dry for 24 hours or more, apply two additional coats.

h. Apply patches in accordance with manufacturer's instructions. If manufacturer's instructions are not available, use the following procedure. Activate the cement on the cell and patch by wiping it with lint-free cheesecloth moistened with an authorized cleaning solvent.

i. When properly activated, the cement will become tacky. Perform a knuckle test to ensure the surfaces are properly activated before applying the patch. The cement should feel sticky without adhering to the knuckle.

NOTE

Do not apply the patch before the cement has reached the proper stage of tackiness. If the cement has reached the proper stage before the patch is applied, there will be no skidding or sliding of the patch immediately after application. Sliding shall not be evident in any area of the patch. After the solvent has dried completely (approximately 1 hour), apply a new patch using three coats of cement.

j. Center the patch over the damage (Figure 9-19) and firmly roll it down with a one-quarter inch hand roller. Start from the center of the patch and work outward toward the edge (Figure 9-20). Using this pattern will help prevent trapped air or a blistered condition.

k. The fuel cell shall not be moved or inspected for 24 hours after the first patch has been applied. After 24 hours has elapsed, inspect the patch for looseness.

l. If blistering or poor adhesion is found, the patch shall be removed and reapplied. Both the cell and patch shall be thoroughly cleaned before reapplying. Carefully remove the loose patch. Remove excess cement from the fuel cell and patch before it dries by briskly rubbing the area with lint-free cheesecloth moistened with an authorized cleaning solvent.

m. After inspection and acceptance of the first patch, apply additional patches as required. Do not subject the repair to fuel until 24 hours after the last patch has been applied.

9.12.5 Vulcanizing (Hot Patch) Repair. This method is accomplished by the same method as stated in Paragraph 9.12.4, except for the cements used and the curing cycle. The curing cycle is reduced to 1 hour.

a. After the patch has been rolled down, apply a sheet of Release Film (MYLAR) over the patch; place a one-quarter inch to one-half inch thick cloth foam and a one- eighth to one-quarter inch thick aluminum plate over the patch. Place another piece of foam and plate on the opposite side of the repair. Ensure the cell and patch are not distorted and the material is laying flat between the plates.

b. Place a 290 ± 10 °F heating iron on the plate covering the patch and secure it firmly in place with a C-clamp.

c. Apply heat for 1 hour. Unplug the heating iron and allow it to cool to room temperature before removing the clamp and plates.

d. In accordance with TO 33D2-3-56-31, RCD may be used in lieu of heating iron to accelerate cure time

e. Remove the iron and plates; inspect the patch for proper adhesion. If loose edges are found, re-cement area.

9.12.6 Vacuum Seal Patch Installation Using Cold Cure Method (Nitrile and Vithane Bladder Cells).

NOTE

Refer to Figure 9-36 and Figure 9-37 for materials and repair set-up.

a. Prepare perforated release film and breather cloth that overlay the repair area and fit within the area enclosed by the tacky tape or putty in Figure 9-37.

b. Lay the release film over the repair patch, followed by the breather cloth as shown in Figure 9-37.

c. Place the valves for vacuum air source and vacuum regulator on top of breather cloth away from damaged area. Their relative location is not critical provided they are located outside the repair area and have at least one inch of breather cloth between them to minimize leakage.

d. Cut a sheet of bagging material large enough to overlap the tacky tape/putty at all points as shown in Figure 9-37.

e. Make opening in the release material to expose the valve stems for the vacuum air source and vacuum regulator.

f. Lay the release material over the repair and press it down into the band of tape as shown in Figure 9-37 to obtain an airtight seal around the valves and bagging perimeter.

g. Attach air source line to the vacuum air valve.

h. Turn on air source and regulate the vacuum pressure to obtain 15 to 25 in Hg as measured on the vacuum regulator gauge (See Figure 9-37).

i. Ensure wrinkles and air pockets do not form under the bagging form in the bag, and work them out by hand as the bag forms over the repair. Ensure bagging has been drawn down tightly against the repair area and maintains a vacuum seal. If the bag is torn or punctured during wipe down, repair it with transparent tape and wipe away all air bubbles that entered through the hole.

j. Allow the repair to sit undisturbed for a minimum of 24 hours. The fuel cell shall not be moved or inspected for 24 hours after the first patch has been applied. After 24 hours have elapsed, inspect the patch for looseness.

k. If blistering or poor adhesion is found, the patch shall be removed and reapplied. Both the cell and patch shall be thoroughly cleaned before reapplying. Carefully remove the loose patch. Remove excess cement from the fuel cell and patch before it dries by briskly rubbing the area with lint-free cheesecloth moistened with an authorized cleaning solvent.

l. After inspection and acceptance of the first patch, apply additional patches as required. Do not subject any repair to fuel until 24 hours has lapsed.

9.13 INSPECTION AND REPAIR OF SELF-SEALING CELLS.

9.13.1 Inspection.

9.13.1.1 Interior Inspection Criteria for New/Removed Cells.

a. Loose Liner at Throat of Fitting. One-half inch looseness in width around circumference at throat of fitting (Figure 9-6). Looseness to be trimmed at time of repair up to one-quarter inch width if one inch bond is maintained between laps. Vertical edge looseness or the separation of rubber material (fillet) from the vertical surface around the entire metal flange is acceptable.

b. Edge Looseness at Liner Lap. One-quarter inch width if one inch bond is maintained between laps.

c. Edge Looseness on Liner Reinforcements (Corner Patches and Chaffing Patches). One-half inch maximum looseness if loose area does not exceed 15 percent of patch width. Blisters or separations other than in edge area allowable up to one-half inch square, six inches apart.

d. Looseness under Cemented Components such as Attaching Straps, Baffle Shoes, etc. 15 percent of individual areas if one-half inch bond is maintained around edge (Figure 9-7).

e. Blisters between Liner and Fitting Flange. One-half inch maximum dimension; maximum one per liner foot and four per fitting if one inch bond is maintained (Figure 9-6).

f. Damaged Coating on Accessories (Metal or Rubber). Acceptable if corrosion or other deterioration is not present. Corrosion treatment shall be accomplished in accordance with TO 1-1-691.

g. Checking Due to Weather, Ozone, Dry Cracking, or Surface Imperfections in Liner (Figure 9-10). Not acceptable.

h. Blisters in Liner Lap. One-quarter inch maximum dimension; no more than one per linear foot of splice with maximum of five in any five foot length of splice (Figure 9-8).

i. Blisters, Delaminations or Ply Separations. One inch square maximum dimension if there is a six inch bond between blisters.

j. Channels in Inner Liner Laps. One-quarter inch by three inch maximum dimension with a maximum of one in any five linear feet of splice (Figure 9-8).

k. Channels around Entire Outer Edge of Fitting Flange. One-quarter inch maximum width (Figure 9-6).

l. Channels at Tapered Construction Step-Off Area or Edge of Lap Splices of any Ply. One-quarter inch maximum width of entire length of lap (Figure 9-9).

m. Checking Due to Ozone of Buna Rubber (Figure 9-10). Not acceptable.

n. Open End Channels in Three-Ply Liner Overlaps or Tailored Corners. One-quarter inch by three inch maximum dimension if one inch minimum bond is maintained between end of channel and sealant.

o. Cuts or Tears in Inner-Liner. Not acceptable.

p. Buffing through Inner-Liner. Not acceptable.

9.13.1.2 Exterior Inspection Criteria for New/Removed Cells.

a. Blisters or Ply Separation between any Plies except Liner and Sealant. One inch maximum dimension.

b. Skim Coat Paint Blister. Acceptable.

c. Loose Hangar Straps or Hangar Attaching Points. Acceptable, up to 15 percent looseness total area if one-quarter inch bond is maintained around edge.

d. Checking due to Weather, Ozone, Dry Cracking, or Surface Imperfections other than Fittings. Acceptable.

e. Damage through Outer Cord or Fabric Ply. Not acceptable.

f. Channels or Bridging of Outer Plies at Cord or Fabric Splices. One-half inch maximum width, full length of splice (Figure 9-9).

g. Outer Ply Cuts or Splits Parallel to Cords where Cords are not Damaged. Not acceptable, may cause activation.

h. Permanent Set or Crease. Not acceptable.

i. Loose Liner at Throat of Fitting. One inch looseness in width around circumference at throat of fitting (Figure 9-6). Looseness to be trimmed at time of other repair up to one-quarter inch width if one inch bond is main-

tained between laps. Vertical edge looseness or the separation of rubber material (fillet) from the vertical surface around the entire metal flange is acceptable.

9.13.1.3 Interior Inspection Criteria for Installed Cells.

a. Loose Collar at Throat of Fitting. One inch looseness in width around circumference at throat of fitting does not include the collar on a replaced fitting (Figure 9-6).

b. Edge Looseness at Liner Lap. One-half inch width if remainder of bond is good (Figure 9-8).

c. Edge Looseness on Liner Reinforcements (Corner Patches and Chaffing Patches). One-half inch maximum looseness if loose area does not exceed 20 percent of total area. Blisters or separations, other than in edge area, allowable up to 20 percent of total area.

d. Looseness under Cemented Components such as Attaching Straps, Baffle Shoes, etc. 20 percent of individual areas if one-quarter inch bond is maintained around edge (Figure 9-7).

e. Blisters between Liner and Fitting Flange. One-half inch maximum dimension; maximum two per liner foot and three per fitting if one inch bond is maintained (Figure 9-6).

f. Damaged Coating on Accessories (Metal or Rubber). Acceptable if corrosion or other deterioration is not present. Corrosion treatment shall be accomplished in accordance with TO 1-1-691.

g. Checking Due to Weather, Ozone, Dry Cracking, or Surface Imperfections in Liner (Figure 9-10). Not acceptable.

h. Blisters in Liner Lap. One-half inch maximum dimension; with maximum of five in any 5 foot length of splice with a minimum six inch bond between blisters (Figure 9-10).

i. Blisters, Delaminations or Ply Separations. One and one-half inch maximum dimension if there is a six inch bond between blisters and not more than one per square foot of area.

j. Channels in Inner Liner Laps. One-quarter inch by three inch maximum dimension with a maximum of one in any five linear feet of splice (Figure 9-8).

k. Channels around Entire Outer Edge of Fitting Flange. One-half inch maximum width (Figure 9-6).

l. Channels at Tapered Construction Step-Off Area or Edge of Lap Splices of any Ply. One-half inch maximum width of entire length of lap (Figure 9-9).

m. Open End Channels in Three-Ply Liner Overlaps or Tailored Corners. One-quarter inch by three inch maximum dimension if one inch minimum bond is maintained between end of channel and sealant (Figure 9-8).

n. Cuts or Tears in Inner-Liner. Not acceptable.

o. Buffing through Inner-Liner. Not acceptable.

p. Damaged Anchor Fittings. Maximum cut or worn area 25 percent of total dimension.

q. Activated Area. Not acceptable.

r. Broken Stiffeners or Supports. Not acceptable.

9.13.1.4 Exterior Inspection Criteria for Installed Cells. Only accessible portions of cells will be inspected. Do not remove cells from aircraft for inspection.

a. Blisters or Ply Separation between any Plies except Liner and Sealant. One and one-half inch maximum dimension.

b. Skim Coat Paint Blister. Acceptable.

c. Loose Hangar Straps or Hangar Attaching Points. Acceptable, up to 20 percent looseness total area if one-quarter inch bond is maintained around edge.

d. Loose or Damaged Tapes, Corner Patches or other Outside Accessories. Acceptable if sealant is not activated.

e. Checking due to Weather, Ozone, Dry Cracking, or Surface Imperfections other than Fittings. Acceptable.

f. Damage through Outer Cord or Fabric Ply. One inch maximum dimension.

g. Channels or Bridging of Outer Plies at Cord or Fabric Splices. One-half inch maximum width, full length of splice (Figure 9-11).

h. Outer Ply Cuts or Splits Parallel to Cords where Cords are not Damaged. Acceptable if sealant is not activated.

9.13.2 Repair.

9.13.2.1 General. Sealant separation or swelling is caused by fuel coming in contact with the sealant, and can be caused in one of two ways; a pinhole or cut through the nylon barrier or spillage of fuel to the outside of the cell, which will wick to the sealant, causing swelling or separation, and will sometimes split or rupture the inner liner. The separation shall be trimmed and care shall be taken not to damage any plies. After all damaged plies have been removed, trim two

inches beyond to make sure that all fabric that might be fuel soaked is removed, then the area shall be checked. If the damaged area is over 200 square inches or extends into a corner or step off area, the question of whether to repair or condemn a cell will depend upon the availability of spare cells, cost involved, or extensive damage to the cell which would make repairs extremely difficult or in some cases impractical.

9.13.2.2 Inside Preparation.

9.13.2.2.1 After the damaged area has dried for 72 hours, the plies shall be trimmed to allow a two inch step or lap of each ply. If all plies were damaged and removed, the repair shall start by applying a patch to the outside. This patch shall be of fabric material of the same weight in which the cell was manufactured, and shall be large enough to extend four inches in all directions from the edge of the cutaway section. Center the patch over the section and using a non-waxed pencil, outline an area one-half inch larger in all directions than the outside edge of the patch, buff the patch and the outlined area on the cell, and clean the area and the patch with lint-free cheesecloth moistened in an authorized cleaning solvent.

9.13.2.2.2 Apply three coats of cement to the area and the patch, and allow each coat to dry thoroughly.

9.13.2.2.3 Before the patch is applied, wipe with lint-free cheesecloth moistened with an authorized cleaning solvent. Perform a knuckle test to determine if the cement is tacky.

9.13.2.2.4 When the cemented areas are tacky, the patch shall be centered within the non-waxed pencil lines and rolled down firmly with a one-quarter inch hand roller, starting at the center of the injury and rolling outwards. This will require two repairers on a large cell as one repairer must enter the cell and back the area being rolled with a sheet of plywood or other solid backing. All sharp corners or edges shall be removed from the backing platform.

9.13.2.2.5 After the outside patch has dried for 24 hours, the rest of the repair shall be made from inside the cell. Make a patch of repair fabric to fit the first inside step area of the repair and buff both sides. Apply three coats of cement to one side of the patch and to the inside of the cell. When the last coat of cement is dry, wipe with lint-free cheesecloth moistened with an authorized cleaning solvent. When tacky, install the patch by holding the two edges together, centering the patch and rolling it into place, starting in the center and rolling outward.

9.13.2.2.6 After the fabric ply has been installed and carefully checked to make sure that there is no trapped air, cut the next ply of gum sealant to fit as close as possible to the area in which it is to be applied. Remove gloss from both sides of the uncured sealant by using 120-grit sandpaper by hand. Care shall be taken in cleaning the sealant and only a minimum amount of an authorized cleaning solvent shall be used. Solvent will cause the sealant to swell. Apply three coats of cement to both the sealant and the area in which it is to be applied. Care shall also be taken in rolling this ply into place because the sealant will cut easily under the pressure of the rollers.

9.13.2.2.7 The next ply is cut from outside fabric repair material. Buff both sides and clean. Apply three coats of cement and roll down in position after the cement has reached its proper tackiness. The next ply shall be of sealant gum and shall be prepared and applied in the same way as the first ply of sealant gum.

9.13.2.2.8 After the second ply of sealant gum has been applied, it should bring the repair up to the level of the outer ply. If additional thickness is needed to obtain this required level, sealant gum, 0.055-inch gage or 0.110-inch gage, shall be used to obtain the required level.

9.13.2.2.9 After the required level has been reached, prepare a patch of Buna nylon sandwich material, cured on both sides. The patch shall be cut large enough to extend two inches in all directions beyond the cut-away area. This patch shall be buffed and feather-edged on both sides to prevent air entrapment at step-off area when the cover patch is applied. After the patch is buffed and cleaned, apply three coats of cement to the cell and patch and allow it to dry to knuckle-test consistency. Activate the cement with an authorized cleaning solvent. Center the patch on the repair and roll down.

9.13.2.2.10 When the nylon sandwich patch has been completely installed, no air bubbles are found and all edges are rolled down, prepare a cover patch from Buna nylon sandwich material. The patch should extend three inches beyond the first inside patch. Buff the inside of the patch and bevel the patch on the outside edge. Apply three coats of cement to both the patch and the damaged area. Allow both areas to dry to knuckle-test consistency. Activate the cement with an authorized cleaning solvent, roll down the patch, and apply two coats of cement around the edges of the patch.

9.13.2.2.11 The fuel cell shall not be moved for 24 hours after application of the patch. Afterwards, the cell may be moved to permit inspection of the patch for air bubbles.

9.13.3 Repair of Separation that Extends into Fitting Area. A separation that extends into and under a fitting flange shall be repaired in the same way as an inside preparation with the following exceptions.

9.13.3.1 Mark the fitting with a fine line from a non-waxed pencil, making the lines long enough to extend beyond the repair area. Cut out the fitting.

9.13.3.2 When installing an outside cover patch, the patch shall be cut in a shape and size large enough to extend completely around and three inches in all directions from the throat of the fitting.

9.13.3.3 After the repair has been completed, install the fitting.

9.13.4 Repair of Hole-Type Damage less than Three Inches in Diameter.

9.13.4.1 Mark two circles around the damage on the outside of the cell wall with a non-waxed pencil. Draw the inside circle large enough to include all damaged sealant and ragged edges, but not smaller than three inches in diameter; draw the outer circle on a one inch larger radius (Figure 9-24). Buff an area on the cell extending from the outside circle outward for a two and one-half inches larger radius and remark the outside circle. Using the inside circle as a guide, cut away the cell material with a knife blade held at a right angle to the cell wall. Then bevel-cut the edge of the hole using the larger circle as one guide, and the edge of the liner in the hole as another. This results in a shallow bevel of about 30 degrees, and provides an efficient adhesion surface.

9.13.4.2 Buff the inner liner for four and one-half inches away from the edge of the hole. Make a patch of Buna nylon sandwich material three inches larger than the diameter of the hole. Make a second patch of repair Buna material to overlap the first patch one and one-half inches. Feather edge the first patch and buff both sides. Apply cement to the inner liner of the cell and to both sides of the patch and allow to dry to knuckle-test consistency. Activate the cement with an authorized cleaning solvent. When proper tackiness is obtained, center the patch over the hole and roll down. Buff the down side of the second patch and, when the first patch is dry, apply three coats of cement to the areas and the patch. When the cement is properly tacky, center the patch and roll down. When the cement is dry, check for air bubbles and apply two coats of cement to the edges of the patch.

9.13.4.3 Build a trestle or other support inside the cell under the area to be repaired. Wooden blocks and boards used inside cells shall be padded or covered with felt or sponge rubber to protect the liner from damage (Figure 9-17).

9.13.5 Laying and Rolling Sealant. Cut as many patches of sealant as there are layers of sealant in the injured area one inch larger in diameter than the diameter of the cutout in the cell. Use sealant material comparable in thickness to the material in the area of the damage. As layers are applied, coat each surface with three coats of cement on both sides of the sealant for adhesion and let dry to knuckle-test consistency. Apply each layer separately rolling down thoroughly. Care shall be taken not to cut the sealant with the roller. After the repair has dried, carefully trim the excess sealant to a line flush with the outside of the cell (Figure 9-25 and Figure 9-26). A handy tool for fuel work can be made from an ordinary soldering iron. Braze a semicircular piece of copper approximately three-eighths inch thick and cut on a 1-inch radius onto a three and one-half inch length of three-eighths inch round copper stock. Taper the head down so that the tool resembles a rod cutter. Refer to Chapter 8 for fabrication instructions. Insert the finished part into the soldering iron in place of the regular copper tip. This is known as a “hot knife” and is adaptable to removing fittings, trimming sealant, etc. It cuts very easily when hot and care shall be taken not to cut too deeply. Workmen shall practice on a condemned cell before using the knife for actual repair. Apply an outside retainer or cover patch with outside material fabric.

9.13.6 Reinforcing Wrap for Tubular Fitting.

9.13.6.1 In order to strengthen fittings and retard normal ozone cracking of synthetic rubber, all tubular or barrel type fittings shall be wrapped with outside repair material. Light gage fabric material shall be used to provide flexibility. The procedures for wrapping fittings will vary with the type of fittings involved, although the principle is the same. Wraps for two-piece fittings i.e., a fitting in which the tubular or protruding barrel is molded separately and is detachable from the flanges vulcanized to the wall of the cell, will extend only the length of the tubular portion and will terminate three-eighths inch from the base of the tube (Figure 9-27). The normal procedures for wrapping fittings are:

a. Determine the extent to which the fitting surface is to be wrapped. This shall include as much of the tubular portion as possible and, in one-piece fittings, the fingers shall extend two inches onto the flat surface of the cell (Figure 9-28).

b. Wrap the fitting with paper to make an exact template of the required stock. Allow enough stock to get to good butt point.

c. Cut the patch from outside repair fabric, using template as guide, which has been buffed on the down side. The template may be saved and used on other fittings of the same manufacturer and stock number.

d. Remove any partial fabric wrapping which may have been previously applied to the fittings.

e. Buff the surface on the fitting by hand with 80- to 120-grit sandpaper. Do not use a power buffer. Fittings are easily damaged and are difficult to replace.

f. Apply three coats of cement to the fitting surface and patch. Allow each coat to dry completely.

g. Buff and cement the fabric wrap in the same way as when preparing an outside patch.

h. Apply the fabric wrap carefully to the fitting, rolling down securely and butting at adjoining surfaces. A mandrill the same size as the inside diameter of the tubular fitting sometimes may be inserted to facilitate rolling.

i. After one-piece fittings have been wrapped, the fingered area shall be covered with a reinforcing patch. Cut the cover patch so that its inside diameter is the same as the outside diameter of the base of the fitting and so that the outside diameter of the cover patch extends one-half inch beyond the fingers of the wrap.

9.14 INSPECTION AND REPAIR OF VITHANE FUEL CELL.

9.14.1 Inspection Criteria for New/Removed Vithane Bladder Cells.

9.14.2 Vithane Cell Exterior Inspection (Installed Cells). Only accessible portions of cells will be inspected; they shall not be removed from the aircraft for inspection.

a. Skim Coat Blisters. Acceptable.

b. Separation between Layers. One-half inch maximum.

c. Slits, Holes, or Tears. Not acceptable.

d. Damage through Cord or Fabric Ply. Not acceptable.

e. Blisters or Looseness between any Labels or Decals and Body of Cells. Acceptable.

f. Skim Coat off Outer Ply. Acceptable.

g. Loose Edges. One-half inch maximum dimension.

h. Missing Coat. Not acceptable.

9.14.3 Application of Cover Patches over Fitting Flanges.

9.14.3.1 Apply one patch of FT235 repair fabric over the inside flange. Cut the patch one and one-half inches larger in all directions than the fitting flange. Cut an opening in the center the same shape as the opening in the fitting, but one-eighth inch larger in all directions. Care shall be taken to avoid getting cement on the sealing surface of the fitting. Patches are cemented and applied in the same way as other standard patches. The opening shall be centered carefully so that the amount of material is approximately the same in all directions.

9.14.3.2 Only one patch is used on the outside of the fitting. This patch shall be of outside fabric material which has been cut two inches larger in all directions than the fitting flange. The center is cut to the proper size and shape to accommodate the fitting. A patch applied to a protruding or barrel type fitting shall fit snugly around the base of the fitting barrel. A patch applied to a metal insert fitting shall have an opening one-half inch larger in all directions than the gasket or compression surface of the fitting.

9.14.3.3 This fitting replacement procedure may not be practical for all replacements. Inserting the fitting from the outside of the cell may sometimes be convenient. Some installations can be made more easily if the patch is cemented to the flange before the fitting is inserted. Many of these details are left to the judgment of the person making the repair, but the following steps shall always be taken.

a. On Vithane fuel cells, mix cement in accordance with instructions. Apply a coat of cement to the cover and the fitting flange. Allow cement to dry for 15 minutes. Apply a second coat of cement and allow it to dry for 5 minutes.

b. One cover patch shall be installed on each flange of the fitting.

c. The outside patch on the metal insert fitting should not interfere with the gasket or compression surface.

9.14.3.4 Wrap barrel-type fittings.

9.14.3.5 On Vithane fuel cells, tape a piece of release film over the patch. Assure that the release film is larger than cemented area, and remains in place. Clamp and cure the patch in accordance with instructions.

9.15 REPAIR OF GOODYEAR (VITHANE) CELLS.

9.15.1 General.

9.15.2 Vithane fuel cells differ in construction and material from nitrile Buna-N-Rubber fuel cells and can be identified by the Goodyear construction numbers BTC 54A, 67, 49, 69, 85, 86, 101 and number variations such as 86-1. Repair shall be made by entirely different methods and materials. Vithane fuel cell ZF16 37764 incorporates a self-sealing panel on left and right sides of cell. Vithane construction consists of one or more plies of urethane spray, coated nylon or polyester fabric, a fuel barrier, and a urethane sprayed inner liner. Buna-N rubber shall not be used for these repairs.

9.15.3 Types of Damages and Repairs.

9.15.3.1 Separations. Remove all loose material. Apply both an outside and inside repair patch.

9.15.3.2 Holes, punctures, cuts, tears or abraded area. Trim away all loose or ragged material and apply an outside and inside repair patch.

9.15.3.3 Loose edges or loose fitting flanges. Abrade the area with emery cloth. Clean with an authorized cleaning solvent and apply two coats of cement to each contact surface. Clamp and cure.

9.15.3.4 Missing coat. Abrade surface adjacent to the missing coat with emery cloth. Clean with an authorized cleaning solvent and apply four coats of cement and cure.

9.15.3.5 Metal sealing surface. For repair of metal sealing surface, proceed to step 9.15.3.6.

9.15.3.6 Accessory replacement. Abrade the contact surface smooth when adding or replacing accessories.

9.15.3.7 Activated area. Mark out a three inch, four inch, or six inch circle, one that includes all the activated sealant. Cut out material to the marked line, making sure that the cut is made in sound non-activated material. Apply the self-sealing repair plug.

9.15.4 Repair Limitations.

9.15.4.1 Inside patches are to overlap the damaged area a minimum of one inch in each direction.

9.15.4.2 Outside patches, when required, shall be one-half inch larger than the inside patch.

9.15.4.3 Separations between layers (or plies) larger than one-half inch diameter require repairs.

9.15.4.4 Slits, tears, and activation are limited to six inches maximum length, or diameter.

9.15.4.5 Loose edges may be trimmed, provided a one inch minimum lap or seam is maintained.

9.15.4.6 The maximum number of heat applications permitted on the same repair is limited to four.

9.15.5 Vithane Bladder Cells Repair Procedures.

a. Trim all loose or damaged fabric from the repair area with scissors. The damaged area shall be rounded to prevent further tearing of the cell.

b. Clean area with an authorized cleaning solvent and tape cell surface approximately 12 inches beyond the damaged area.

c. Cut an inside patch from repair material (FT-227) large enough to cover the damaged area and extend a minimum of one inch from edge of damaged area in all direction, and round the corners of the patch. If outside patch is required, it shall be one-half inch larger than the inside patch.

d. Center the repair patch over the defect. Mark one-half inch beyond in all directions.

e. Abrade the cell surface surrounding the damaged (marked) area and the contact side of the patch with fine emery cloth to remove the gloss.

f. Clean the abraded area twice with a clean cloth that has been moistened with an authorized cleaning solvent.

g. Tape an eight by eight inch piece of release film over the defect on the outside of the cell.

h. Mix three-part cement in accordance with manufacturer's instructions.

i. Brush one even coat of repair cement on the abraded area of the cell to within one-quarter inch of edge and on the abraded side of the repair patch. Allow to dry 15 minutes.

j. Apply a second coat of cement to repair as in step i. Allow the cement to dry 5 minutes.

k. Center the inside patch over the damaged area. Lay the repair patch carefully by rolling action from center to edge to prevent trapping air. The repair patch may be moved by hand on wet surface by sliding to center over damaged area. Tape a piece of release film over the patch.

l. Cover smooth surface of each of the two aluminum pressure plates (plates must be larger than the cemented area) with fabric backed foam. Tape foam side to the plate. Foam must cover edges of plate for added protection.

m. Sandwich the cell between the padded pressure plates.

n. Apply a 240 °F cure iron to the plate covering the repair patch. Secure the assembly with a C-clamp. Tighten by hand. Wipe off excess cement that flows beyond the pressure plates.

o. In accordance with TO 33D2-3-56-31, RCD may be used in lieu of heating iron to accelerate cure time.

p. Plug the 240 °F cure iron into the specified voltage electrical outlet. After 2 hours cure, unplug the electric repair iron and allow it to cool to room temperature. Then remove the heating iron and plates. Remove the release film.

q. Inspect edges of the patch for a complete seal. If loose edges are evident, re-cement patch area and cure as above.

r. Use the same procedure as described for inside patch repair for an outside patch. The outside patch shall be one-half inch larger than the inside patch.

9.15.5.1 Air-Cure Method. Follow the same procedures as the heat cure method except omit using the electric cure iron. Air-cure each repair for a minimum of 24 hours, undisturbed, at 70 °F.

9.15.5.2 Inspection. Vithane cells are to be tested the same as bladder type fuel cells.

9.15.6 Vithane Self-Sealing Cell Repair Procedures.

9.15.6.1 General. The self-sealing portion of Vithane fuel cells consists of an outer wall of nylon fabric reinforcing plies, sealant material, barrier material, and a Vithane rubber inner liner. The self-sealing is constructed the same as the non self-sealing cells, except that sealant material FT-235 shall be used for repairs.

9.15.6.2 Type of Damages and Repairs. For damages and repairs, refer to Paragraph 9.15.3.

9.15.6.3 Repair Limitations. For repair limitations, refer to Paragraph 9.15.4.

9.15.6.4 Repair of Self-Sealing Vithane Cells. Self-sealing fabric shall be repaired the same as Urethane Vithane non-self-sealing fuel cells, except that fabric repair material FT235 shall be used. Refer to Paragraph 9.15.5.

9.15.6.5 Preparation.

a. Trim or cut away all defective material. The opening diameter should correspond to the diameter of the self-sealing repair plug (e.g., FT 205, FT 236).

b. Clean inside and outside cell surface with an authorized cleaning solvent and tape approximately 12 inches beyond the damaged area.

c. Abrade cell surface surrounding the damage one-quarter inch beyond the repair plug flange both inside and outside, and the contact surfaces of the repair plug. Use fine emery cloth to remove gloss.

d. Clean abraded surfaces of cell and repair plug three times with a clean cloth, moistened with an authorized cleaning solvent. Use clean cloth for each operation.

e. Pour two-part cement into container and mix thoroughly.

f. Insert self-sealing repair plug in cell with the stenciled side facing out. Push one flange of the plug through the hole and straighten the flanges so they lie flat on both the inside and outside of the repair area.

g. Brush one coat of cement evenly on to the abraded contacting surfaces of the cell and the abraded flanges of the repair plug. Allow to dry for 15 minutes.

h. Apply a second coat of repair cement and allow it to dry for 5 minutes.

i. Lay the plug flanges (one at a time), working out all trapped air to assure good contact.

j. Tape a piece of release film over each repair plug flange.

k. Apply pressure plates and heat iron as outlined in Paragraph 9.12.5.

l. Air-cure each repair for a minimum of 24 hours, undisturbed, at 70 °F.

9.15.6.6 Fitting Repair. Replace fuel cell fittings in accordance with instructions contained in Paragraph 9.17.

9.15.6.7 Testing of Vithane Self-Sealing Fuel Cells. Vithane self-sealing fuel cell shall be tested the same as bladder type fuel cell.

9.15.6.8 Cell Studs. For cell studs on Vithane self-sealing, refer to the applicable weapons system technical orders.

9.16 GENERAL DAMAGE REPAIRS FOR BLADDER AND SELF-SEALING CELLS (EXCEPT VITHANE).

NOTE

Specific damage repairs will be accomplished per the general procedures in Paragraph 9.12.2.2. Exceptions to that procedure are stated with the description of the specific damage.

9.16.1 Repair of Inside Closed Hole or Slit-Type Damage. (Bladder or Self-Sealing Cells)

9.16.1.1 A closed hole or slit-type damage that is two inches or less in length and, does not extend through the barrier of the cell with no displacement of material, shall be repaired as outlined in Paragraph 9.12.5. This type repair requires only one patch on the inside of the cell.

9.16.1.2 If the damage is greater than two inches in length, extends through the barrier and/or displaces the material, it shall be repaired by applying a patch on the inside and outside of the fuel cell.

9.16.1.3 Outside Repairs for Damage that Extends only through the Outer Ply. (Bladder or Self-Sealing Cells)

a. The cell shall be supported around the damage so that the edges of the damage can be properly aligned in their natural positions. Build a trestle or other support inside the cell. Wooden blocks or boards shall be padded or covered with felt or sponge rubber to protect the liner from damage. The procedures outlined in Paragraph 9.12.4 shall be followed, except that the patch material will be changed to outside fabric.

b. When repairing a self-sealing cell with a closed hole or split-type damage of over two inches, outline an area three inches in all directions from the damage with a non-waxed pencil.

c. Patch Preparation. Prepare the first patch to extend one inch in all directions from the damage, using the same type of material as that being repaired. This patch shall be buffed and feather-edged on both sides. The second patch shall extend two and one-half inches in all directions from the damage and be prepared in the same way as stated in Paragraph 9.12.4.

9.16.2 Repair of Weather-Ozone Checked Inner-Liners.

9.16.2.1 Fuel cells with weather-ozone checked inner liners that do not exceed a maximum of five percent of the total surface of the cell or do not exceed 36 by 36 inches or equivalent surface area for any one patch shall be repaired as follows:

a. Mark an area one inch larger in all directions from the checking with a non-waxed pencil.

b. Make a patch of Buna-N sandwich material to extend one-half inch in all directions from the checked area; buff the patch and the area. When using a power buffer, buff very lightly to keep the liner from burning and never buff the liner to the barrier. Clean the patch and the area with clean, lint-free cheesecloth moistened in an authorized cleaning solvent.

c. Apply three coats of cement to the patch and the area. The first coat shall be applied with a stiff bristle brush, working with a circular motion so the cement will be worked into the checks. Each coat of cement shall dry completely before the next coat is applied. Activate both surfaces with an authorized cleaning solvent and place the patch in position and roll it down. After the cement has dried and been checked for looseness, apply two coats to the outer edge of the patch.

9.16.3 Repair of Blisters.

9.16.3.1 An inner-liner blister is caused by trapped air between the liner and the barrier. A blister is often mistaken for ply separation, which is the loss of adhesion between successive layers. Blisters under one-half inch square are not injurious and need not be repaired; however, if two or more are found within a six square-inch area, they shall be repaired as follows.

a. Buff the blister surface and two inches in all directions from its edge. Slit the blister from end to end and buff the underside of the loose edges by hand. The slit may be cut to resemble two “Ys” placed end to end. Apply three coats of cement to the inside surfaces and let each coat dry thoroughly.

b. Roll down the blister to remove all trapped air. After the cement has dried thoroughly, apply a patch of Buna nylon sandwich material for a cell with Buna liner; or apply a patch of fabric nylon sandwich material for a bladder cell with a fabric liner, extending one and one-half inches in all directions from the blister’s edges. Complete the repair in the same way as for inside damage.

c. When repairing blister or separation using the hot patch method, clean area with an authorized cleaning solvent. Apply three coats of hot patch cement (PN 1895C or PN 95195) letting each coat dry to the touch before applying the next. When the third coat of cement has dried to the touch, activate the cement with an authorized cleaning solvent. Roll down the blister to remove all trapped air and install the patch. Apply heating iron.

9.16.4 Repair of Loose Seams and Patches (Outer Edge).

9.16.4.1 Loose lap seams on the inside of a cell shall be repaired as soon as they are noticed. This will prevent the looseness from spreading to the sealant.

a. Buff an area on top of the loose seal two inches in all directions from the edges of the loose seam, continuing the measurement to the cell wall if necessary. Clean the area inside the separation with lint-free cheesecloth moistened with an authorized cleaning solvent. Let the area dry and apply three coats of cement, allowing it to dry thoroughly between coats. Wipe the cemented area

with lint-free cheesecloth moistened with solvent. This will yield a tacky condition. Firmly roll down the loose seams to remove trapped air and let the seal dry before proceeding.

b. Cut a patch of Buna-N sandwich material or nylon fabric sandwich material to extend one and one-half inches in all directions from the edge of the loose seams. Round the corners slightly and bevel the edge of the patch. Buff the patch on the side to be cemented to the cell with the beveled side out. Clean the buffed surface of the patch and cell with an authorized cleaning solvent, apply the patch and complete the repair in the same way as for an inside injury.

9.16.5 Repair of Loose Lap Seams.

9.16.5.1 Loose lap seams on the outside of the cell shall be repaired in the same way as described in Paragraph 9.16.4.1, except the material comparable to the outside material of the cell shall be used. Loose patches shall be removed and replaced.

9.16.6 Repair of Hangar Supports and Straps.

a. Many cells require external or internal support hangers to hold the cell in installed position. Some larger cells have straps on the outside for handling and packing convenience. Most fittings are single flange construction and are not difficult to install. When a damaged hanger, strap or fitting is found, it shall be repaired or replaced.

b. Many hangers have metal inserts. To remove a fitting of this type, the fabric shall be cut away around the insert and used as a guide in removing the fitting. Hangers without the metal inserts shall be buffed off or pulled off using an authorized cleaning solvent. If solvent is used, the repair shall be delayed for 1 hour to allow the area to dry completely. When buffing the old fitting flange, care shall be taken not to break the fabric on the cell.

c. Buff the contact side of the new fitting. Clean the fitting and an area on the cell which has been buffed one-half inch larger than the flange of the new fitting. Apply three coats of cement, allowing each coat to dry completely. Activate both cemented surfaces with lint-free cheesecloth moistened with an authorized cleaning solvent. When the surface is properly tacky, place a hanger directly over the old hanger location and roll down firmly with a roller.

d. Prepare a cover patch that extends one inch beyond the fitting flange. Cut out the center of the patch and allow one inch to overlap the fitting flange. Buff the inside of the patch and the area in which it is to be installed. Clean the area and apply three coats of cement to both surfaces, allowing each coat to dry completely. Activate both surfaces, place in position and roll down. After the cement has dried, apply two coats of cement to the entire buffed surface.

e. Repair replacement procedure for the ferrule Teflon cylinders. Remove the excess remaining cement from the nylon strap by any suitable means, taking care not to damage the strap. Use lint-free cheesecloth moistened with an authorized cleaning solvent to clean the area from which the adhesive was removed. Apply a coat of cement to the cleaned surface on the strap.

9.16.7 Repair of Inside Corners.

9.16.7.1 All inside corner repairs require a double (two-layer) patch. To prevent wrinkling or stretching the repair material, these patches shall be cone shaped and shall fit accurately into the corner.

a. Buff the area around the damage for two inches in all directions from the edge of the damage in the same way as when repairing a flat surface.

b. Cut a patch of Buna nylon sandwich material large enough to extend one-half inch in all directions from the edge of the damage. Cut a single slit in the patch running from the outside edge to the apex of the corner. At the end of the slit in the center of the patch make a second slit one-eighth inch long at a right angle to the first slit (Figure 9-22).

c. Before any cement is applied, fit the patch carefully into the corner. Trim it to size and place the slit so that the lap will form itself to a flat surface of the cell. Use a non-waxed pencil to lightly mark an outline of the patch on the cell with the patch in place, indicating the location of the slit so that the patch can be returned to the same position after cementing.

d. Patch shall be buffed on both sides and feather-edged before cementing. Buff topside of overlapped patch at the slit, clean and cement.

e. Three coats of cement shall be applied to the buffed area of the cell and the inside of the patch. When the third coat is completely dry, wipe with lint-free cheesecloth moistened in an authorized cleaning solvent. When tacky, align the patch with the outline previously drawn on the cell. Press down a narrow strip of the patch running from the outer edge of the corner of the slit. Place the patch so that it accurately matches its outline and so that the inner end of the slit actually falls in the apex of the corner.

f. The patch shall be worked down with a hand roller. Start rolling from the edge of the slit which has already been stuck down and work around the patch to the outer edge of the slit. Be extremely careful to avoid

any wrinkles or trapped air. If the roller or stitcher is too awkward, the patch may be applied with a rolling motion of the finger.

g. After patch has been rolled down, apply three coats of cement to the flat surfaces that form the lap; allow each coat to dry thoroughly before applying the next coat. When the third coat is dry, moisten the area with lint-free cheesecloth moistened with an authorized cleaning solvent and roll down the lap.

h. Be sure that all edges are rolled down securely. If some do not stick, wipe the loose places with lint-free cheesecloth moistened with an authorized cleaning solvent. If loose edges are found after 2 hours dry time, apply another thin coat of cement. Allow to dry and roll again after it has been remoistened with an authorized cleaning solvent. If the patch is still loose at any place, it shall be removed and scraped, the cell cleaned of cement and the repair restarted.

i. After the first patch has been carefully examined and found to be smooth and tight, apply a second patch in the same manner as the first after it has been fitted to the corner by making a slit and overlapping. The location of the overlap on the second patch shall be opposite that of the first patch (Figure 9-22).

9.16.8 Repair of Outside Corners.

9.16.8.1 Outside corner repairs are made in approximately the same manner as inside corner repairs. Patches are cut from outside repair material similar to the outer ply construction and are applied by the same method as outside patches for slit-type injuries on a flat surface. The lap on the outside corner patch shall be covered by an extra strip of repair fabric extending one inch on each side of the outside edge of the lap from the apex of the corner to the outer edge of the patch.

9.16.9 Repair of Exposed Fabric.

9.16.9.1 Exposed fabric outside and inside of fuel cells will be repaired using procedures outlined in Paragraph 9.13.2.

9.17 INSPECTION AND REPAIR OF FUEL CELL FITTINGS.

9.17.1 Inspection.

9.17.1.1 Inspection Criteria for Fully Rubber-Molded Fittings on New and Removed Self-Sealing Cells.

a. Gouges, Splits, or Deep Indentations on Sealing Surface. One-sixteenth inch maximum depth by one-sixteenth inch maximum length (Figure 9-12).

b. Weather Checking on Sealing Surface. Not acceptable (Figure 9-12.).

c. Weather Checking on Outer Flange. Acceptable, up to a depth of 1/16 inch.

9.17.1.2 Inspection Criteria for Fully Rubber-Molded Fittings on Installed Self-Sealing Cells.

a. Gouges, Splits, or Deep Indentations on Sealing Surface. One-sixteenth inch maximum depth by one-eighth inch maximum length (Figure 9-12).

b. Weather Checking on Sealing Surface. Acceptable (Figure 9-12.)

9.17.1.3 Inspection Criteria for Sealing Face without O-Ring Groove.

a. Scratches within Sealing Area. Not acceptable (Figure 9-12).

b. Burrs on Mating Surface. Not acceptable.

c. Damage to Protective Coating. Acceptable.

d. Corrosion or Rust. Not acceptable.

e. Weather Checking on Outer Flange. Acceptable.

9.17.1.4 Inspection Criteria for Sealing Face with O-Ring Groove.

a. Minor Surface Damage outside O-Ring Groove other than Corrosion or Burrs. Acceptable.

b. Physical Damage to O-Ring Groove. Not acceptable.

c. Corrosion. Not acceptable.

d. Cement or other Foreign Material in O-Ring groove. Not acceptable.

e. Bent or Broken Fittings or Damaged Dome Nuts. Not acceptable.

f. Thread-Damaged Fittings. Not acceptable.

g. Elongated or Torn Holes in Fitting Flange of Cells using U.S. Rubber Removable Two-Piece Metal Compression Fittings. Acceptable, if elongation or tear does not extend beyond outer or inner sealing groove of inner ring or over one half the distance to the next hole; minimum of two holes in a row with these conditions.

9.17.1.5 Inspection Criteria for Rubber Face Fittings on New and Removed Fuel Cells. Gouges, Splits, or Indentations on Sealing Surface. One-sixteenth inch depth by one-sixteenth inch length maximum dimension.

9.17.1.6 Inspection Criteria for Rubber Face Fittings on Installed Fuel Cells.

a. Gouges, Splits, or Indentations on Sealing Surface. One-sixteenth inch depth by one-eighth inch length maximum dimension.

b. Weather, Ozone Checking of Surfaces other than Sealing Surface. Acceptable.

c. Weather, Ozone Checking of Sealing Surface. Not acceptable.

9.17.2 Repair.

9.17.2.1 Repair of Fitting O-Ring Groove Area. Damage to fittings in some instances is cause for rejection of an entire fuel cell, particularly when replacement fittings are not available. This situation, unfortunately, is most prevalent with fuel cells of limited production, used in aircraft no longer being manufactured. Since there is normally a requirement for this type of equipment, it is necessary to maintain the capability of servicing these fuel cells and replacing or repairing the fittings. It is advisable to retain a stockpile of salvaged fittings from scrap fuel cells in order to readily replace damaged fittings without undue delay. However, when new or used replacement fittings are not available or obtainable within a reasonable length of time, the ability to repair fittings is invaluable. Prevalent damages that occur to fittings are cracks and breaks of the O-ring groove and flanges. This results from improper disassembly or improper alignment when connected to adjacent assemblies. The O-ring groove flanges are generally thin in cross-section as compared to the body of the fitting and therefore break more readily. When the damaged fitting cannot be conveniently replaced or a replacement fitting is not obtainable and the break is confined to the fitting O-ring groove area, a satisfactory repair can be made. Two types of repairable damage are recognized.

9.17.2.2 Broken O-ring Groove Flanges. The flange between the O-ring groove and the fitting opening is sometimes broken or chipped due to incorrect installation of a cover plate or fitting.

9.17.2.3 Break of the fitting body extending from the corner at the outside diameter of the O-ring groove through to the fuel cavity.

9.17.2.4 Light burrs, scratches, nicks or other damage to the sealing surface of fittings with or without O-Ring grooves. Damage up to 0.005 inch will be repaired.

9.17.2.5 Extent of Damage.

a. Fittings should not be repaired if badly distorted or if the cracks are other than simple straight or slightly curved cracks.

b. Do not repair cracks through O-ring groove areas if longer than twice the distance between adjacent threaded inserts.

c. Do not make more than two repairs on any fitting. Both types of repair are to be at least 90 degrees apart and, in no case, closer than nine inches measured circumferentially between the ends of the repairs.

d. Do not repair broken O-ring flanges if the damaged area is over one inch long.

9.17.3 Repair of Broken O-Ring Groove Flange.

9.17.3.1 If the fitting is distorted, reshape using the bolt ring portion of the mating part as a guide. Conveniently shaped dolly blocks and soft-faced hammers may be used to restore the fitting to its normal shape. Use caution to prevent further damage to the fitting.

9.17.3.2 Contour the damaged area to receive the epoxy resin-patching compound. Use suitably shaped rotary files and scrapers for contouring. These scrapers are also used in dressing the completed repair. Figure 9-29 illustrates the tang end of a file being used as a scraper. Note the ground taper. Using a rotary file, clean up the jagged edges of the break. Cut a taper in the bottom of the O-ring groove (Figure 9-29). The taper shall be such that the outer diameter of the O-ring groove remains at its original level while the inner diameter of the retainer land base will be ground to within 1/64 inch to 1/32 inch from the inner surface of the fitting. The taper is in the radial direction. The taper shall extend circumferentially from one end of the repair to the other. As the grinding tool approaches the end of the damaged area, rotate the tool to maintain the angle of taper on the bottom of the O-ring groove while meeting the inner face of the O-ring groove flange at an angle of 30 degrees to the tangent. Holding the tool in this position, grind a 30-degree knife-edge taper on the inner face of the flange. Fair the tapers into each other at this intersection. A cone-shaped rotary file is best for grinding the inner face of the flange.

9.17.3.3 Use a 180-grit emery cloth and sand all ground surfaces thoroughly. Wash dirt and grit from the repair area with an authorized cleaning solvent.

9.17.3.4 Fabricate two retainer rings from aluminum alloy sheet of convenient thickness to retain the patching compound. One ring should fit the inner face of the flange and the other should fit the outer face. Form the rings so that spring back will hold them in place. The inner ring should be

approximately 1/16 inch to 1/8 inch higher than the flange. The outer ring can be adjusted to the same height by sliding it up or down (Figure 9-29).

9.17.3.5 Cover the faces of the rings that will be in contact with the patching compound with cellophane or equivalent tape. Clean the damaged fitting with an authorized cleaning solvent and install the rings in place on the fitting; ensure they contact the repair area securely.

9.17.3.6 Mix the epoxy patching compound. Fill the space between the rings with patching compound. Use a thin instrument such as a tongue depressor to work the compound. Avoid entrapment of air pockets. As the space between the rings is filled, the compound should ooze under the ring and onto the taper on the bottom of the O-ring groove. Spread the compound, as necessary, to bring the level slightly higher than the surrounding area.

9.17.3.7 Allow the repair to cure at room temperature 8 to 16 hours or until it is solid. Remove the retainer rings. Remove any excess epoxy from the O-ring groove with a scraper; also use an air nozzle to remove the epoxy particles during the scraping operation.

9.17.3.8 Dress the repair to match the contour and surface finish of the fitting. Maintain the dimensions of the O-ring groove accurately.

9.17.4 Repair of Break through the Fitting Body. Cracks occur on fittings having a wide O-ring retainer land and a relative thin cross-section through the bottom of the O-ring groove. Repair as follows.

a. Straighten the fitting if it is bent. Use caution to avoid further damage to the fitting. Stop drill the ends of the break with a No. 50 drill.

b. Working from the inside, vee the break so that the bottom of the vee is approximately one-half way through the work piece. The included angle between the faces of the vee should be approximately 60 degrees.

c. Use 180-grit emery cloth to sand the surrounding area thoroughly.

d. Use a jeweler's disc saw to score the insert bosses and land to 1/32 inch depth. Score the fitting along two lines. Use a hacksaw blade scraper ground to have a round cutting edge to remove the sharp corners at the bottom of the jeweler's saw scores. Do not score the fitting in areas which cannot be reached by the hacksaw blade.

e. Vee out the portion of the crack remaining in the O-ring groove. Since the breaks usually occur next to the rear vertical face of the groove, it will be necessary to slightly undercut this face in order to clean up the break. Thoroughly clean the repair area with an authorized cleaning solvent. Remove all contamination.

f. Provide a dam for holding the epoxy compound in place. Use non-curing aircraft sealers, modeling clay, plaster, or other convenient materials. Avoid contaminating the bonding surfaces of the repair area with these materials.

g. Prepare the epoxy compound and apply to the repair area. Do not trap air bubbles. Arrange the cell so that gravity will assist to hold the repair material in place as it cures. Allow the compound to cure.

h. Dress the repaired area in the O-ring groove to conform to the original dimensions and surface finish. Dress the edge of the reinforcement on the inside surface of the fitting using a powered, cone-shaped rotary stone.

i. When finished with the fitting repairs, ascertain that all debris is removed from the cell cavity. Inspect the repair to determine that adhesion is complete and that the patching compound is well cured. When well cured, the compound should not dent with a fingernail. Inspect for porosity. A small number of pinpoint bubbles is acceptable.

9.17.5 Fitting Replacement. Fitting replacement is not generally considered a difficult operation, although it is a lengthy one. Care shall be taken to achieve accuracy. The materials and tools are the same as those used for other repairs.

9.17.5.1 Removal of Damaged Fittings.

9.17.5.2 Locate the old fitting accurately by measuring from selected points of the cell so that the new fitting can be centered exactly in the same position (Figure 9-31). A non-waxed pencil shall be used when locating and marking fittings.

9.17.5.3 A fitting shall be replaced with the same type as that removed from the cell. Relocation of fitting openings requires skill and experience and shall be attempted only by journeymen repairers.

9.17.5.4 On fittings without metal inserts, cut the fitting flange flush with the outside sealing surface of the fitting. Then cut out the flange of the fitting to the edge of the cell wall. Care shall be taken to avoid cutting the cell, and enlarging the original opening.

9.17.5.5 On fittings with metal inserts, cut out the fitting, using the metal insert as a guide.

9.17.6 Installation of New Fittings.

9.17.6.1 Using an emery buffer, remove enough of the inside and outside flange of the old fitting and the ply that covers it to reduce the thickness of the cell wall so it will fit between the flanges of the new fitting.

9.17.6.2 Buff the inside and outside surfaces of the cell where flanges of the new fittings are to be placed. This buffing shall cover an area extending two inches beyond the edge of the flanges when the new fitting is set in place.

9.17.6.3 If the new fitting has not been buffed, the surfaces inside and outside both flanges must be buffed.

9.17.6.4 If the cell wall does not have enough thickness to fill the space between the flanges of the new fitting, apply a patch of Buna inside repair material to the inside of the cell in the same way as when applying an inside patch. This patch shall be large enough to extend one inch beyond the area to be covered by the fitting flange. Also, the center shall be cut out to match the hole in the cell and all loose edges shall be trimmed. Before the patch is applied, its outside surface shall be buffed and the patch feather-edged. Before inserting the fitting through the opening, the size and shape shall be carefully checked. This can be done with a pair of calipers. The diameter of the cell opening shall not be less than the diameter of the throat of the fitting, but the diameter of the cell opening may be up to one-quarter inch larger than the overall diameter of the throat of the fitting. On fittings that are not circular, the cell opening may be up to one-quarter inch wider than the throat of the fitting to be installed. Filler is not required for the void between the throat of the fitting and the cell wall.

9.17.6.5 Moisten the surfaces of the fitting with an authorized cleaning solvent and force the fitting through the opening in the cell, pulling the outside flange through from the inside of the cell. Check the alignment of the new fitting in the cell opening. If the opening is too small, buff until the new fitting flanges lay flat on the cell. If the opening in the cell does not allow a one inch bond to the new fitting flanges, the cell shall be condemned. When a satisfactory fit has been obtained, remove the fitting from the cell.

9.17.6.6 Cement repair per applicable procedure.

a. Non Vithane air cure. 9951

b. Non Vithane vulcanizing hot patch.

c. Vithane non self-sealing.

d. Vithane self-sealing.

9.17.6.7 With clean hands, insert the fitting in the opening of the cell. Align the fitting carefully so that its location is exactly the same as that of the old fitting. It may be shifted to an off-center position, if necessary, to align the bolt holes. Press the flange to the cell wall. Use the same procedure on the outside flange.

9.17.6.8 Refer to applicable procedures listed in Paragraph 9.17.2, for fitting activation. Air-cure each repair for a minimum of 24 hours, undisturbed, at 70 °F.

9.17.7 Application of Cover Patches Over Fitting Flanges.

a. Apply one patch of Buna inside repair material over the inside flange after the cement applied to the fitting has dried thoroughly (45 minutes).

b. Cut the patch one and one-half inches larger in all directions than the fitting flange. Cut an opening in the center the same shape as the opening in the fitting, but one-eighth inch larger in all directions. Care shall be taken to avoid getting cement on the sealing surface of the fitting. Patches are cemented and applied in the same way as are other standard patches. The opening shall be centered carefully so that the amount of material is approximately the same in all directions

9.17.8 Repair of Burrs, Scratches, Nicks or other Damage on the Sealing Surface (Including O-Ring Groove).

a. Lightly sand the damaged area with 600-grit emery cloth. Extend the sanded area no more than two inches beyond the damage.

b. Clean the fitting with an authorized cleaning solvent.

c. Apply chromate conversion coating, MIL-C81706, in accordance with TO 1-1-691.

9.17.9 Repair of Fully-Molded Fittings (Rubber Fittings With Metal Inserts).

9.17.9.1 A fitting which requires replacement of more than one third of the rubber on the sealing surface shall be replaced.

9.17.9.2 Required Materials. An authorized cleaning solvent, lint-free cheesecloth, Buna-N, cement (MIL-C-9117), heater, heat, transfer fixture, buffing wheel, emery cloth, metal primer (TY-PLY “N”).

9.17.9.3 Procedures. Apply first coat, allow 30 minutes for primer to dry, apply second coat, and allow 30 minutes drying time before proceeding.

a. Slight weather cracks on outer sides and radius of protruding fittings where the flange and the radius merge

should be repaired by applying a coat of cement (MIL-C-9117) to the crack. Do not use this procedure to repair the sealing surface.

b. Buff or sand damaged area. Remove enough material to ensure only sound material is exposed. If metal insert is exposed, sand insert.

c. Clean all surfaces with an authorized cleaning solvent.

d. Insert bolts which have been shortened to fit below the surface of the insert, where necessary, to prevent repair stock from flowing into the screw holes.

e. Apply two coats of primer to exposed metal. Allow each coat to dry for 30 minutes.

f. Prepare enough strips of Buna-N material to fill the void.

g. Apply three coats of cement to both the fitting and Buna-N. Allow each coat to thoroughly dry before the next coat is applied.

h. After the third coat is dry, activate the cement by wiping with lint-free cheesecloth moistened with an authorized cleaning solvent.

i. Place Buna-N material on fitting. Ensure enough material is used to fill the void. Excess material can be buffed off after the curing process is complete.

j. Locally-manufacture heat transfer and pressure fixture to vulcanize the fitting. The fixture shall consist of an internal and external pressure plate to conform to the configuration of the cell.

k. Install fixture on fitting and tighten. Turn heater on and regulate temperature to 290 + 10 °F. Heater should fit over the outer face of the pressure plate fixture. The heater shall be small enough to prevent heating the cell.

l. In accordance with TO 33D2-3-56-31, RCD may be used in lieu of heating iron to accelerate cure time.

m. After 5 minutes, retighten fixture. Continue cure for 60 minutes.

n. Turn heater, or RCD, off. Wait for fixture to cool before removing fixture.

o. Buff and clean the new surface, if necessary, to match original portions of cell fitting.

9.17.9.4 Replacement of Alignment Pins.

9.17.9.5 Some molded fittings use pins to ensure the fittings properly align. Use the following procedure to replace an alignment pin.

9.17.9.6 Required Materials. Buffing wheel, center punch, knife, drill, drift punch.

9.17.9.7 Procedures

a. Buff rubber on opposite side of fitting down to insert and pin.

b. Cut rubber from around side of pin or stud.

c. Center punch the pin on the opposite side to remove pin and remove head with a drill. Remove the remaining portion with a drift punch. Threaded studs shall be unscrewed.

d. Install a new pin. Using a center punch, stake the pin in three equally spaced places around the pin.

e. Repair rubber using the appropriate type fuel cell repair procedures.

9.17.10 Repair of O-ring Fitting. Many bladder and self-sealing cells have an O-ring fitting. The fitting shall be repaired in accordance with Paragraph 9.17.3, any time a scratch, nick or burr is found in the critical surface of the O-ring groove. Care shall be used in the inspection of O-ring fittings. If, while cleaning the metal surface of a fitting, the chromate conversion coating is removed, it shall be replaced with the conversion coating MIL-C-81706 in accordance with TO 1-1-691.

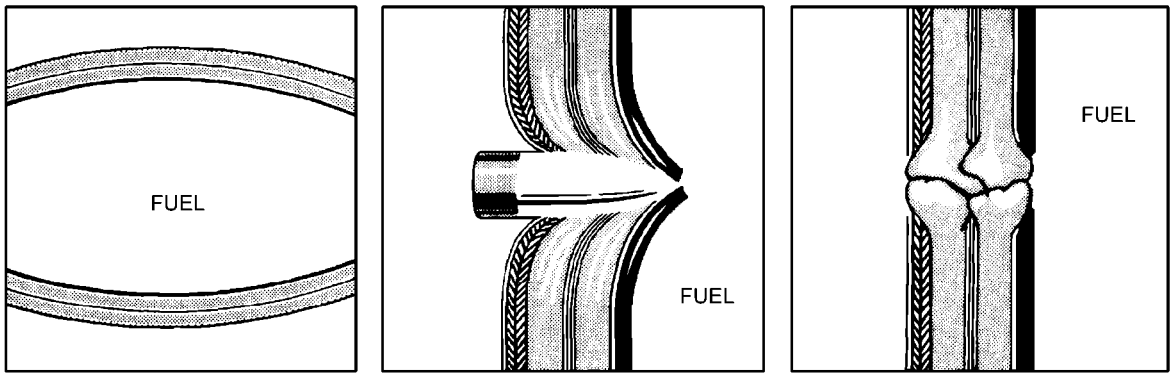

TO-1-1-3-060

Figure 9-1. Projectile Sealing Action

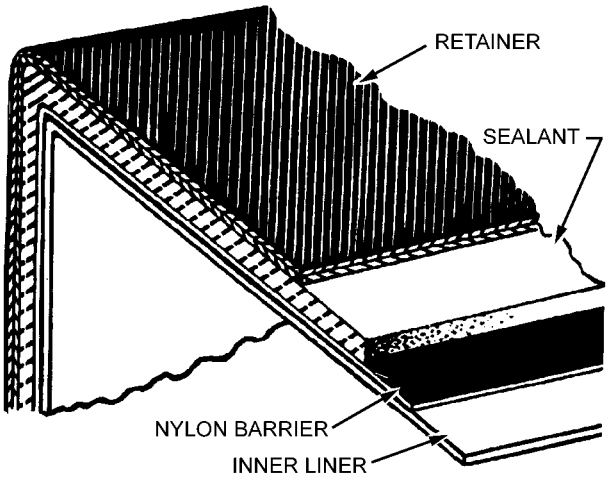

TO-1-1-3-061

Figure 9-2. Self-Sealing

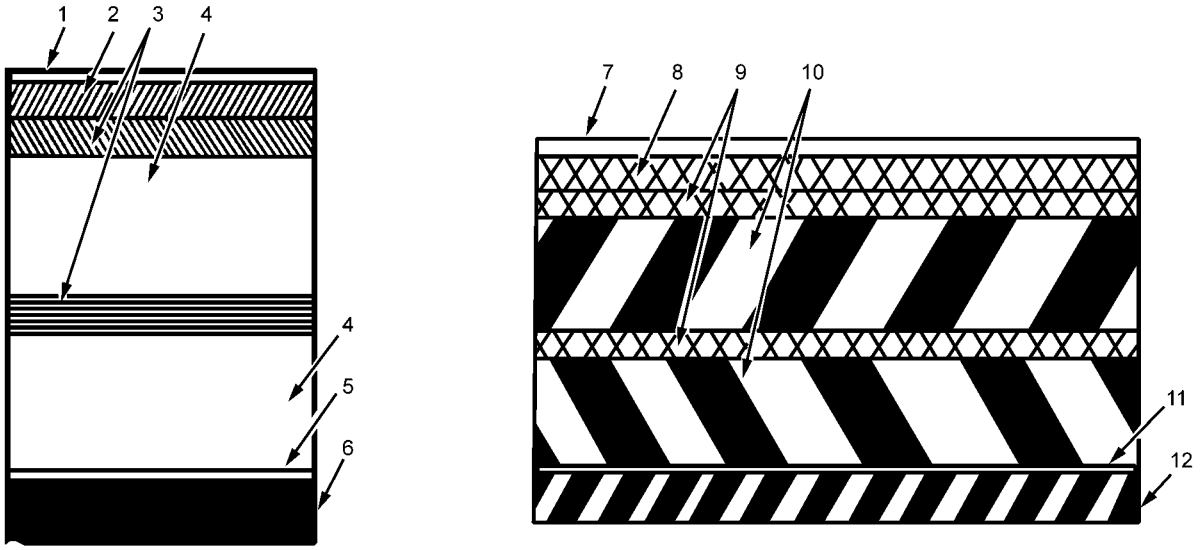

LEGEND:

1. BUNA VINYLITE LACQUER
2. NYLON FABRIC
   OUTSIDE SKIM: BUNA
   INSIDE SKIM: RUBBER
3. CORD RUBBER COATED
4. SEALANT
5. NYLON BARRIER
6. BUNA RUBBER COATED
   FABRIC, OR POLYURETHANE
   INNER LINER
7. VINYLITE LACQUER
8. NYLON FABRIC
9. NYLON FABRIC
10. SEALANT
    NAT CRUDE (100%)
11. NYLON BARRIER
12. HYCAR LINER

TO-1-1-3-062

Figure 9-3. Typical Self-Sealing Construction

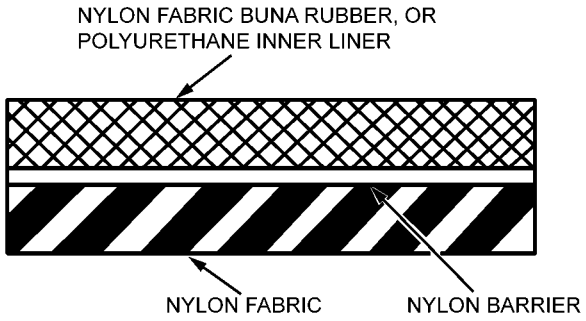

STANDARD BLADDER CELL
NON-SELF-SEALING

TO-1-1-3-063

Figure 9-4. Non-Self-Sealing Construction

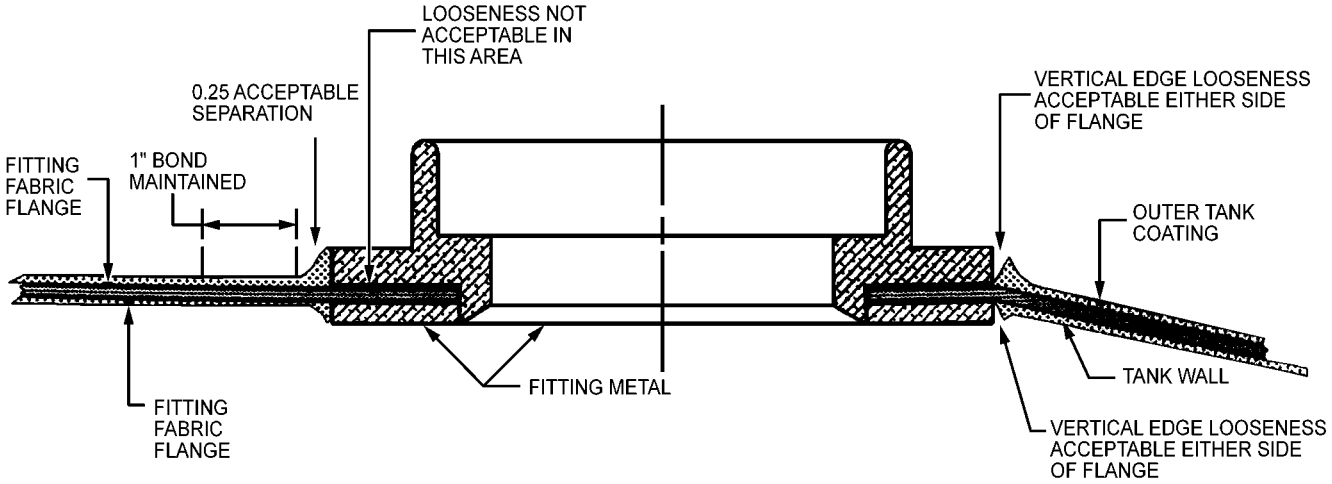

FITTING CROSS SECTION

VERTICAL EDGE LOOSENESS

TO-1-1-3-064

Figure 9-5. Separation of Cell Wall from Fitting Fabric Flange

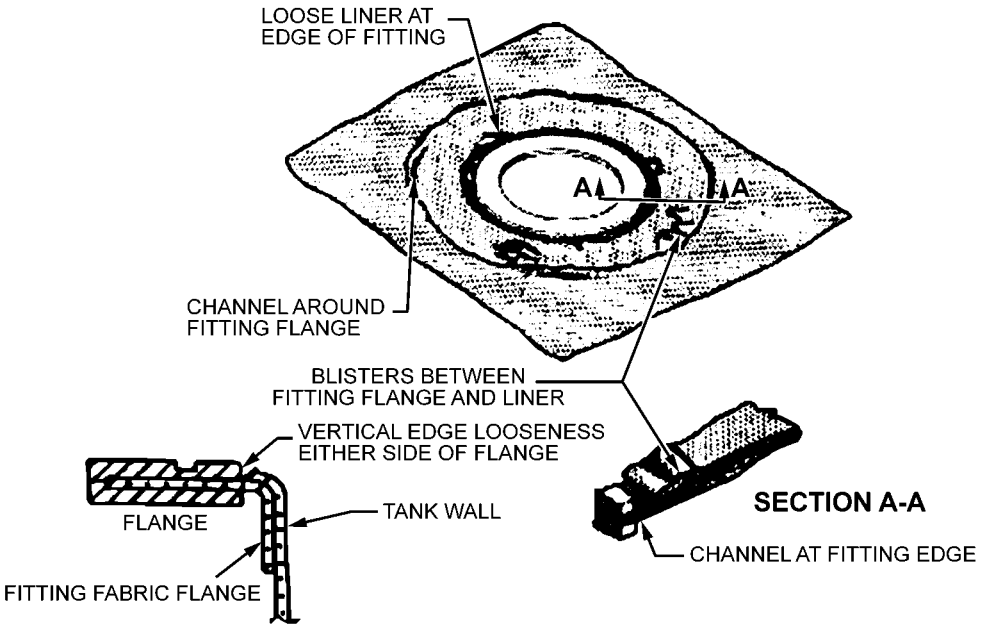

TO-1-1-3-065

Figure 9-6. Channel Blister and Loose Areas

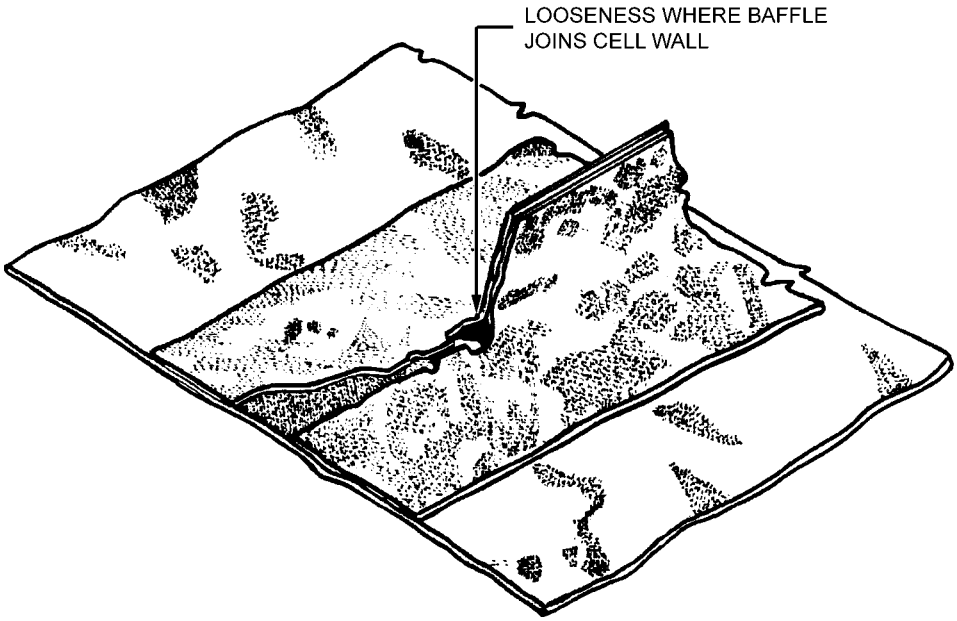

TO-1-1-3-066

Figure 9-7. Loose Baffles

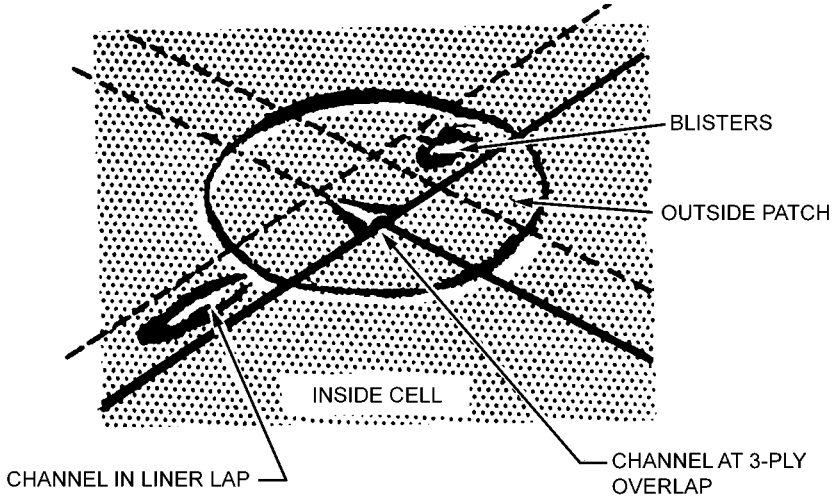

TO-1-1-3-067

Figure 9-8. Loose Patches

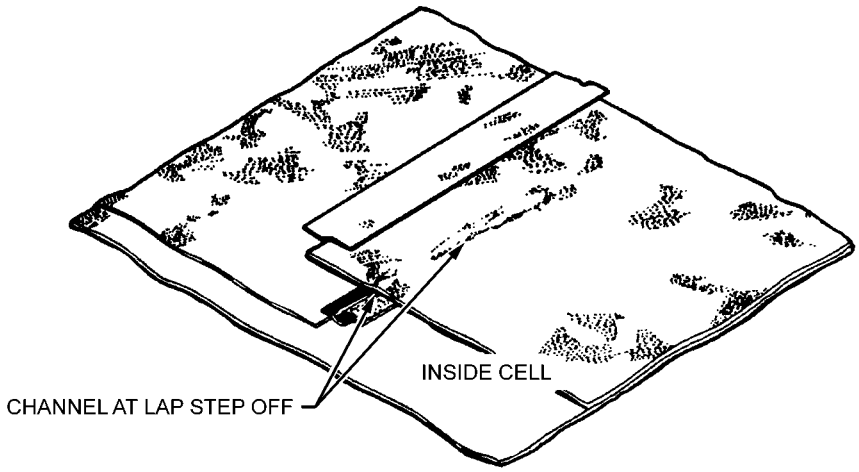

TO-1-1-3-068

Figure 9-9. Channel at Lap Steps

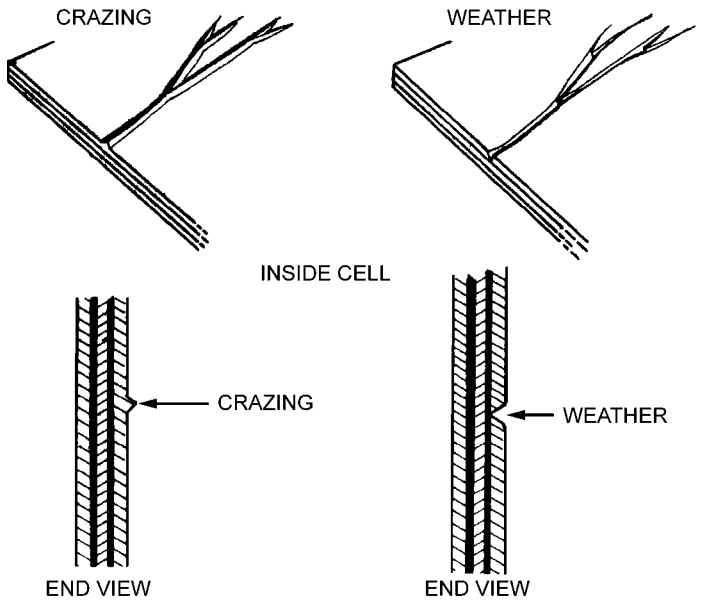

TO-1-1-3-069

Figure 9-10. Weather and Crazing

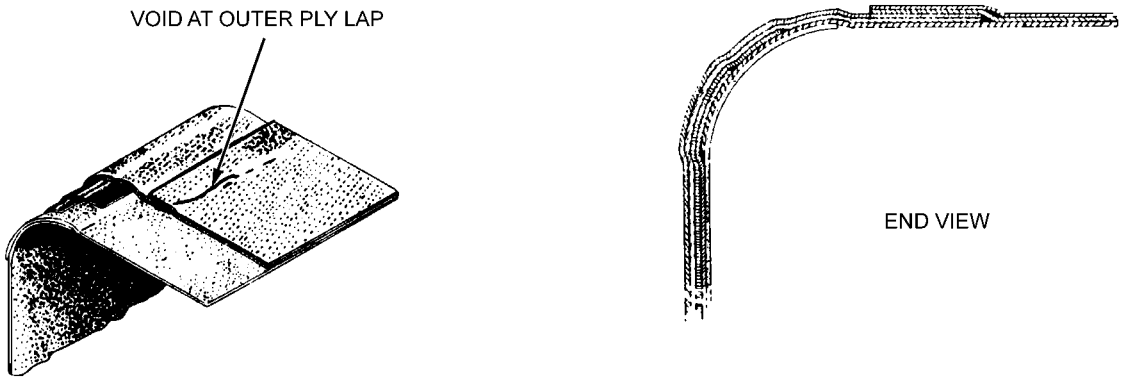

TO-1-1-3-070

Figure 9-11. Lap Channels

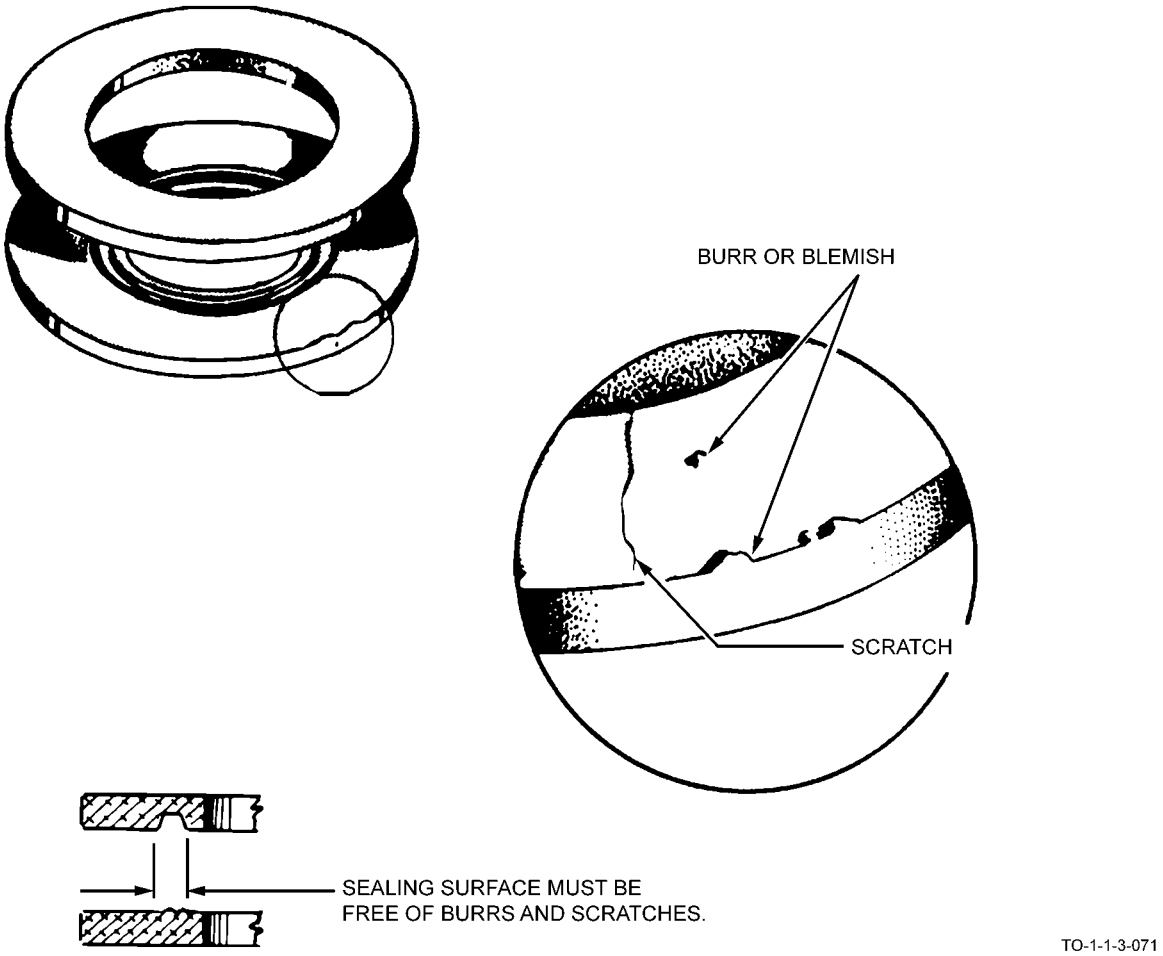

Figure 9-12. O-Ring Fitting Inspection

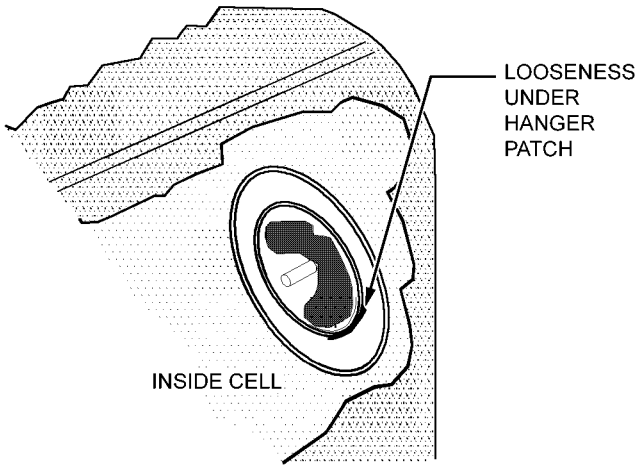

TO-1-1-3-072

Figure 9-13. Looseness Under Hanger Fitting

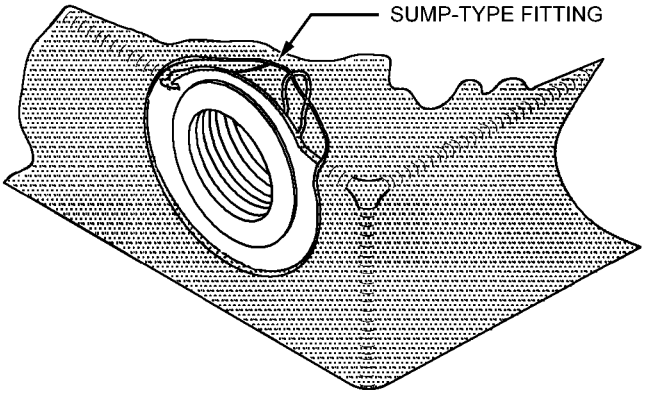

TO-1-1-3-073

Figure 9-14. Sump Fitting

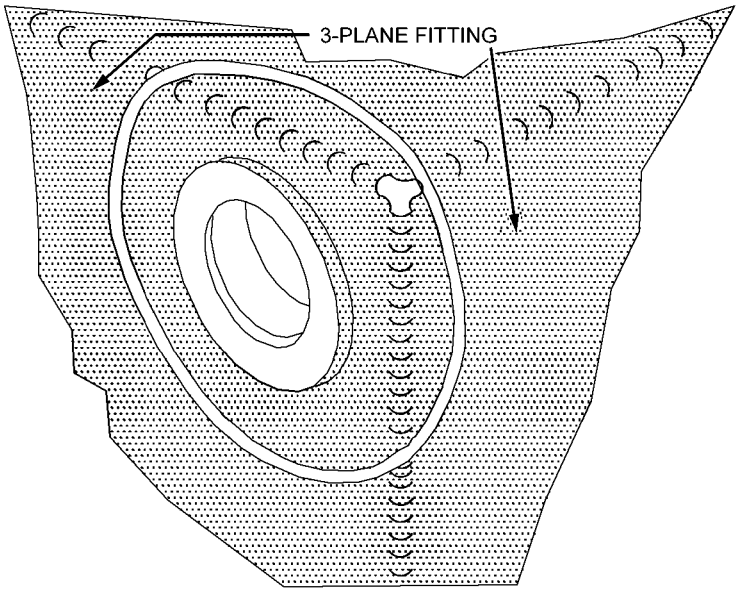

TO-1-1-3-074

Figure 9-15. Three-Plane Fitting

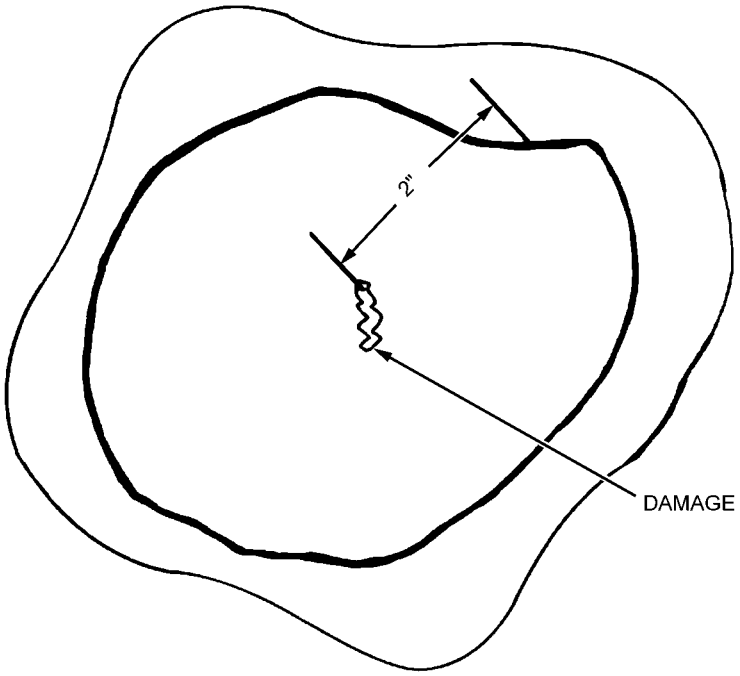

TO-1-1-3-075

Figure 9-16. Marking Area to be Repaired

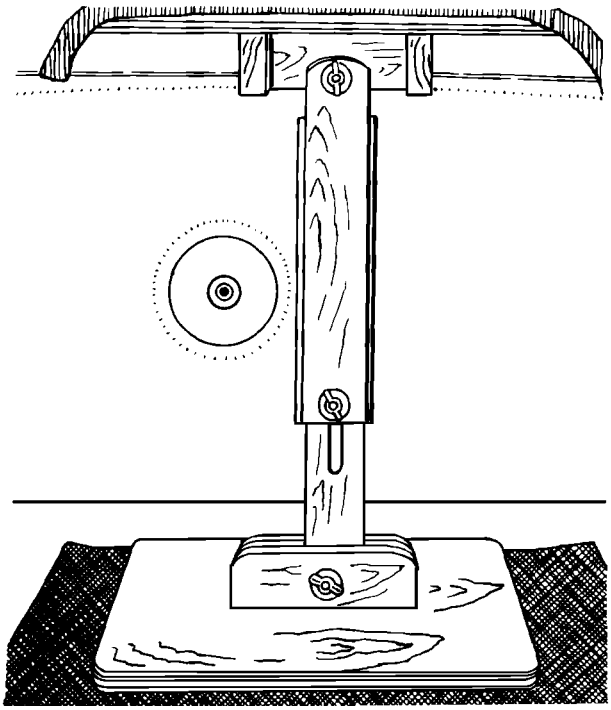

TO-1-1-3-076

Figure 9-17. Pedestal for Supporting Cells

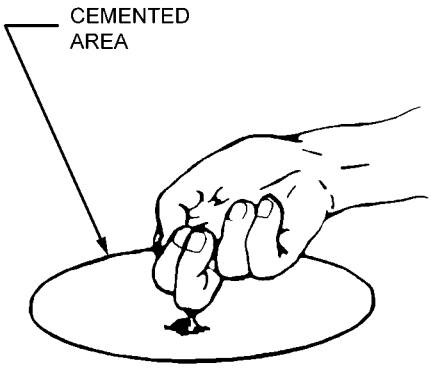

TO-1-1-3-077

Figure 9-18. Knuckle Test

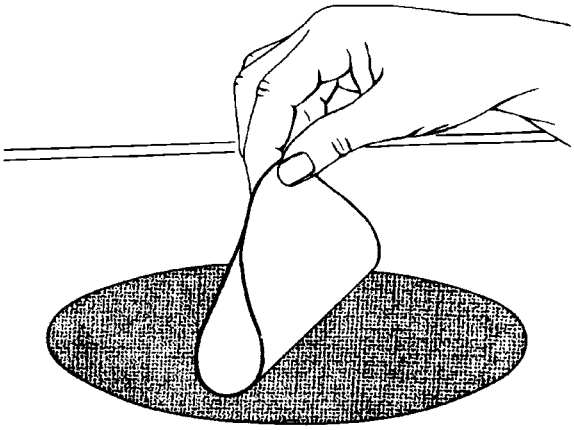

TO-1-1-3-078

Figure 9-19. Centering Patch

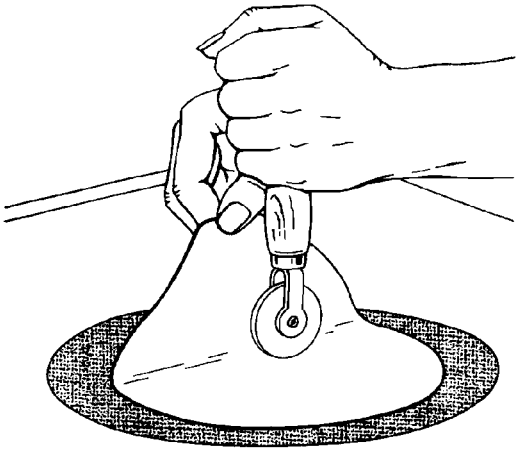

TO-1-1-3-079

Figure 9-20. Rolling Down Patch

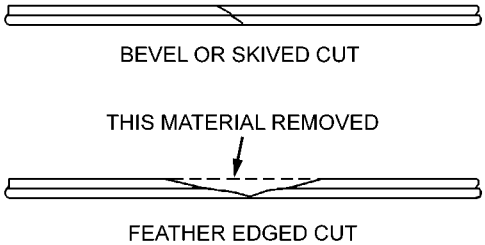

TO-1-1-3-080

Figure 9-21. Sectional Views of Corner Patch

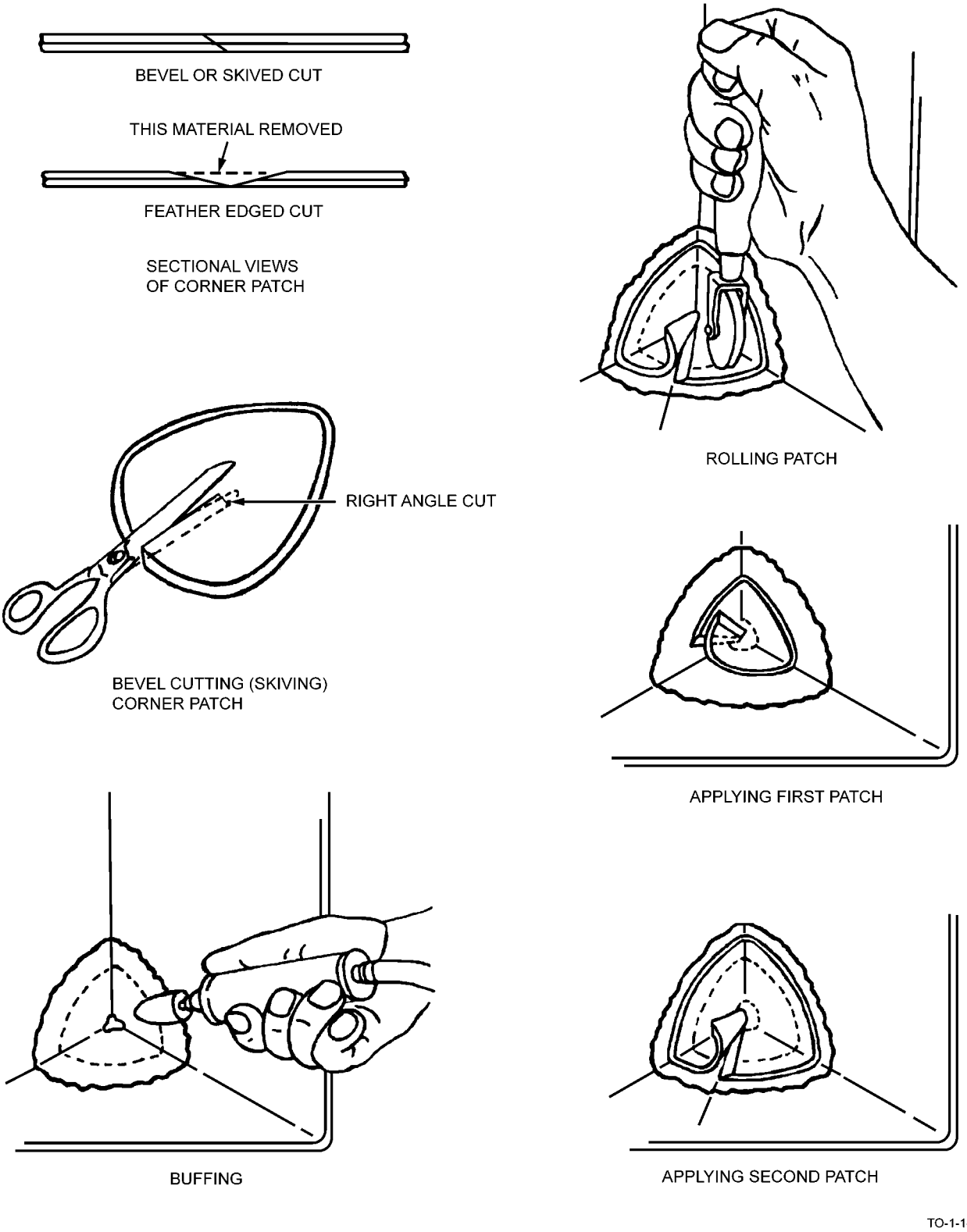

Figure 9-22. Inside Corner Patch

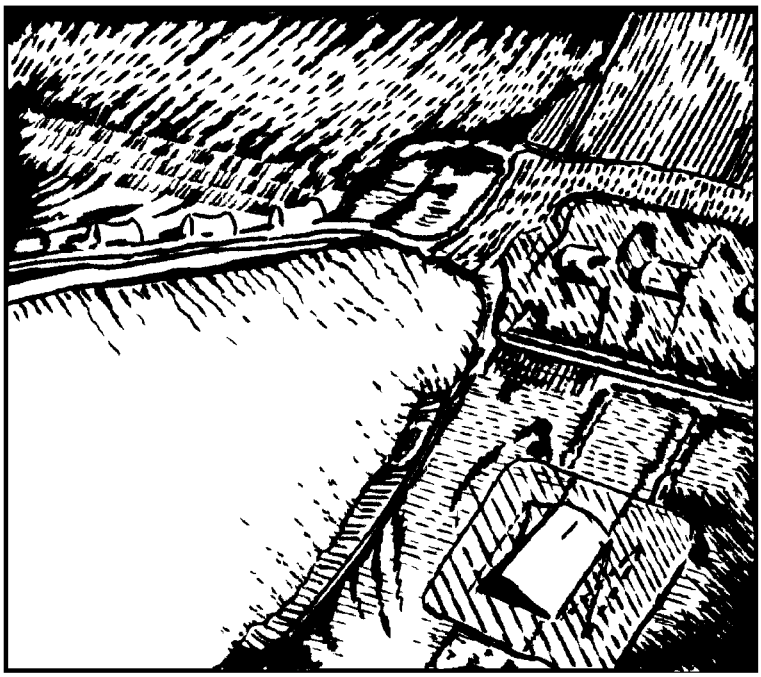

TO-1-1-3-082

Figure 9-23. Ruptured Inner Liner

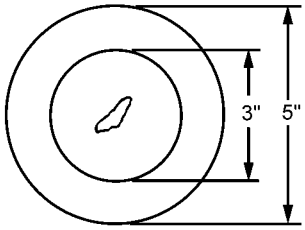

TO-1-1-3-083

Figure 9-24. Marking Cell

TO-1-1-3-084

Figure 9-25. Build-up Cell

TO-1-1-3-085

Figure 9-26. Finished Build-up Cell

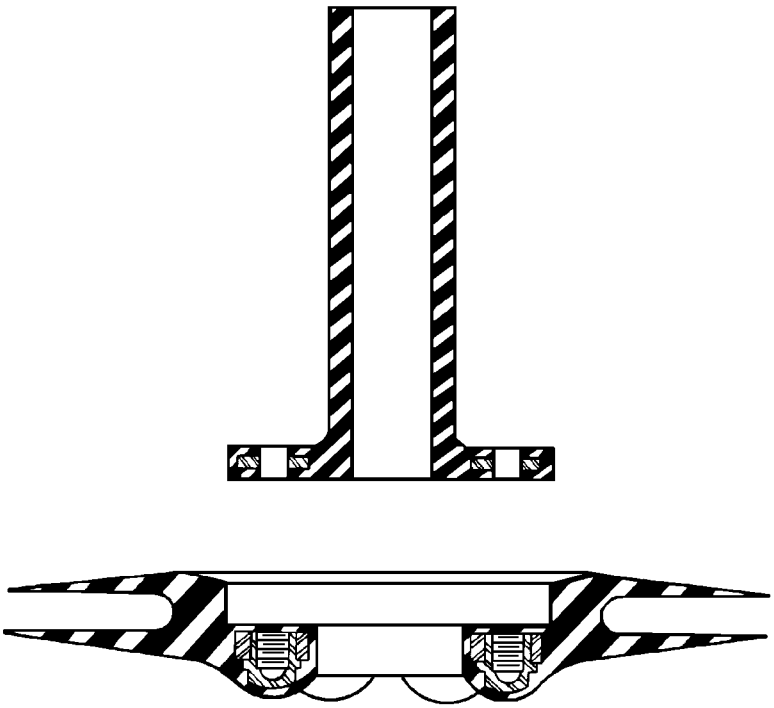

TO-1-1-3-086

Figure 9-27. Two-Phase Fitting

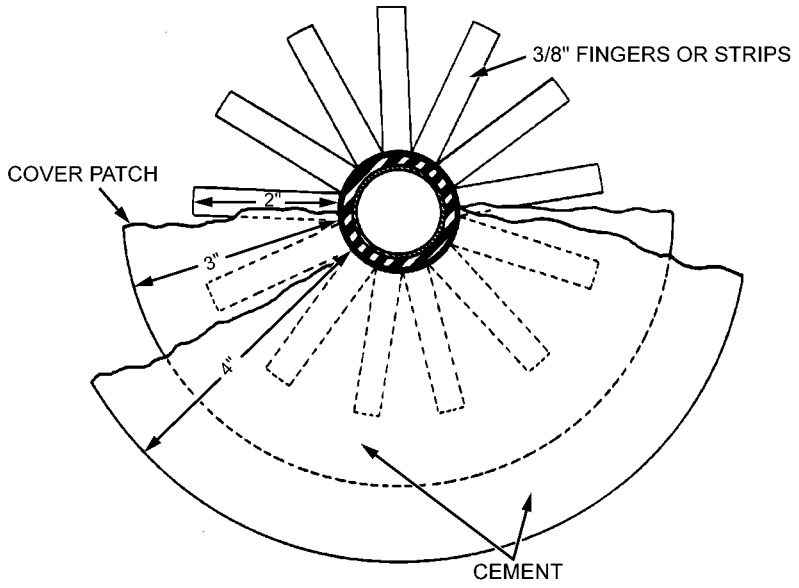

TO-1-1-3-087

Figure 9-28. Wrap Application

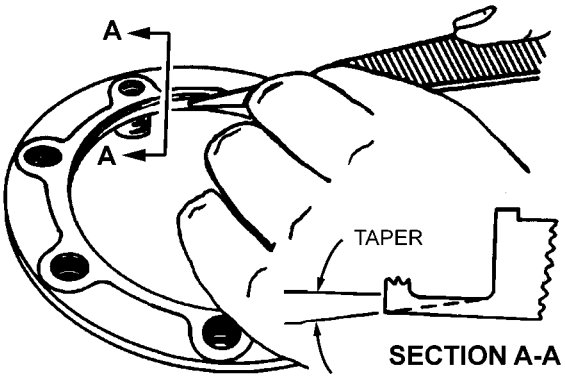

TO-1-1-3-088

Figure 9-29. Fitting Flange Break

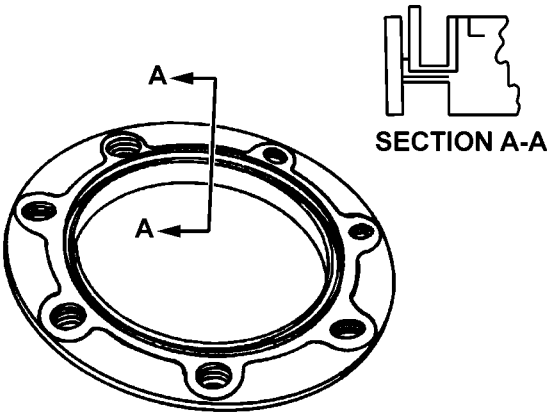

TO-1-1-3-089

Figure 9-30. Retainer Ring Installation

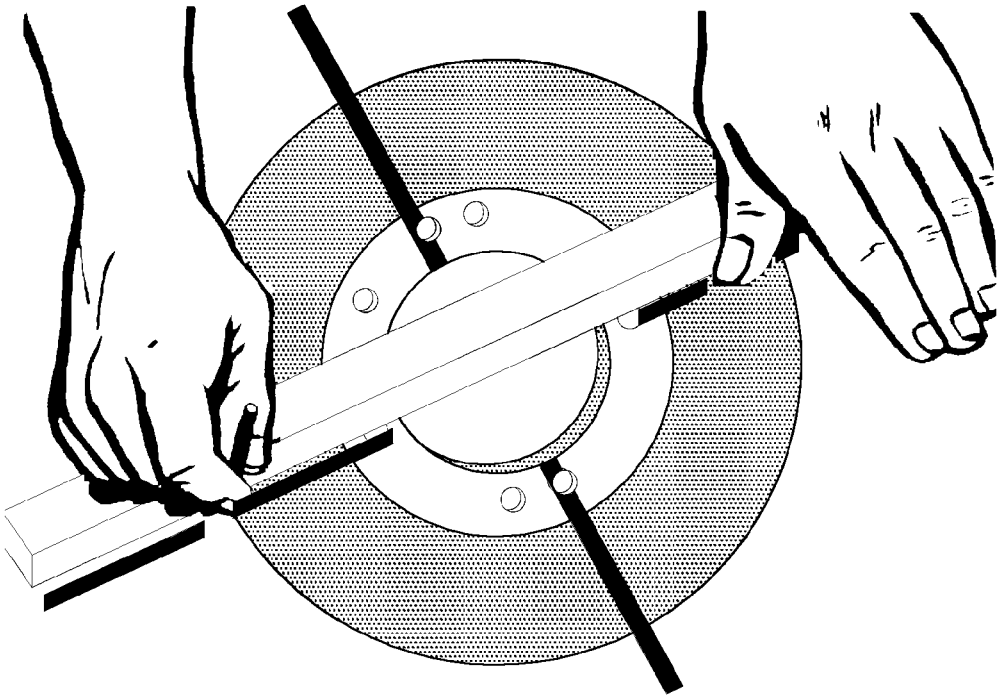

TO-1-1-3-090

Figure 9-31. Locating Fitting

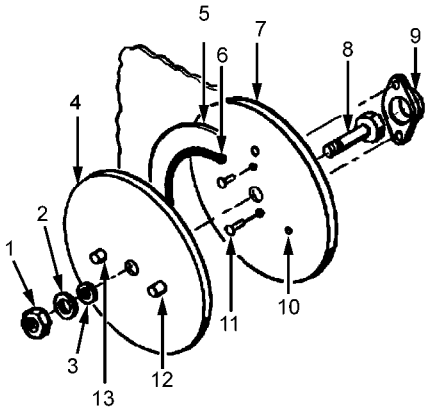

LEGEND:

1. NUT
2. WASHER
3. SEAL
4. COVER PLATE
5. FUEL CELL FITTING
6. O-RING
7. SUPPORT PLATE
8. BOLT
9. BOLT RETAINER
10. AIR PASSAGE HOLES
11. RIVET
12. AIR INLET FITTING
13. MANOMETER LINE FITTING

TO-1-1-3-091

Figure 9-32. Fuel Cell Fitting Leak Test Cover Plate

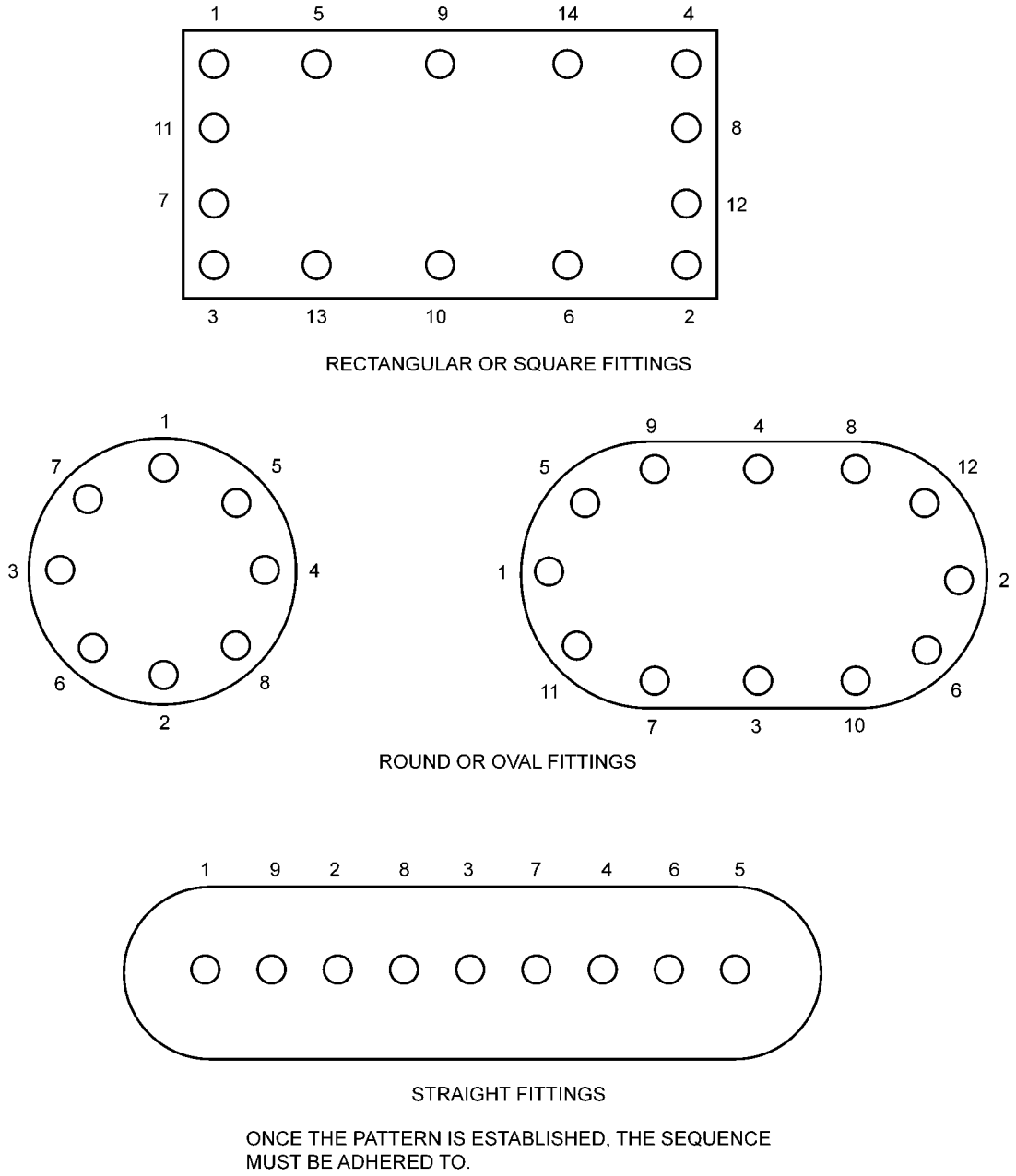

Figure 9-33. Torque Pattern for Bolts

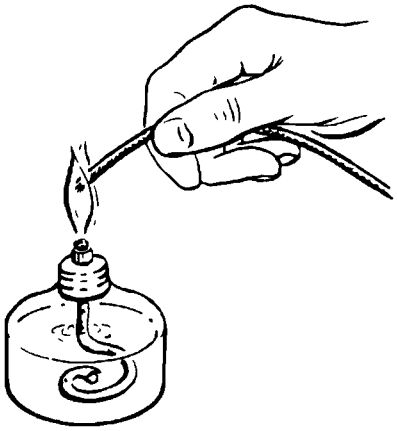

1. MELT END OF NEW LINE UNTIL NYLON BEGINS TO BURN.

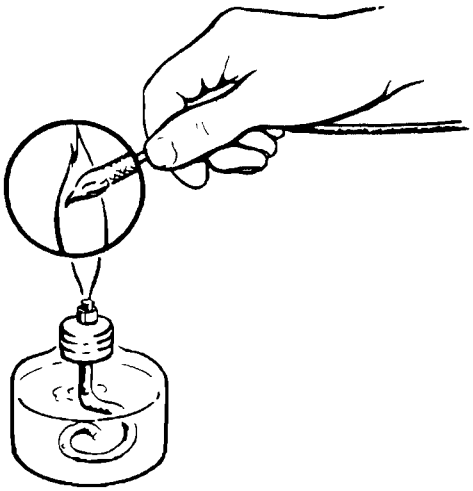

3. REMOVE SHARP TIP BY REHEATING MOMENTARILY IN FLAME.

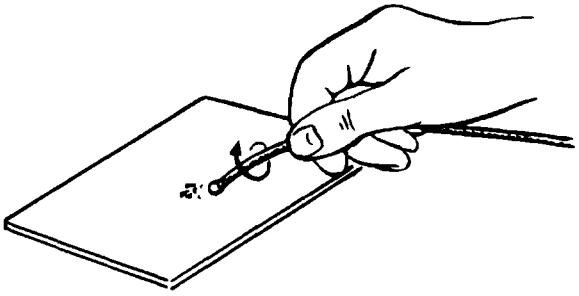

2. ROLL MELTED END ON CARDBOARD OR ANY FLAT SURFACE TO REMOVE EXCESS NYLON AND TO FORM SHARP TIP ON END OF LINE.

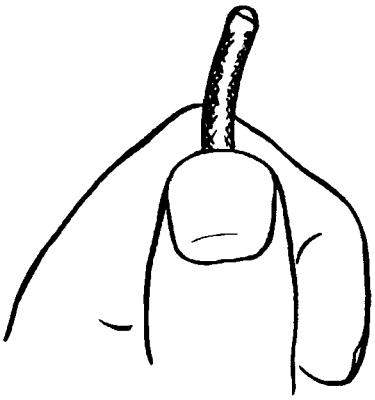

4. ROUNDED END OF LACING LINE PROPERLY PREPARED FOR USE.

TO-1-1-3-093

Figure 9-34. Replacing Lacing Cord

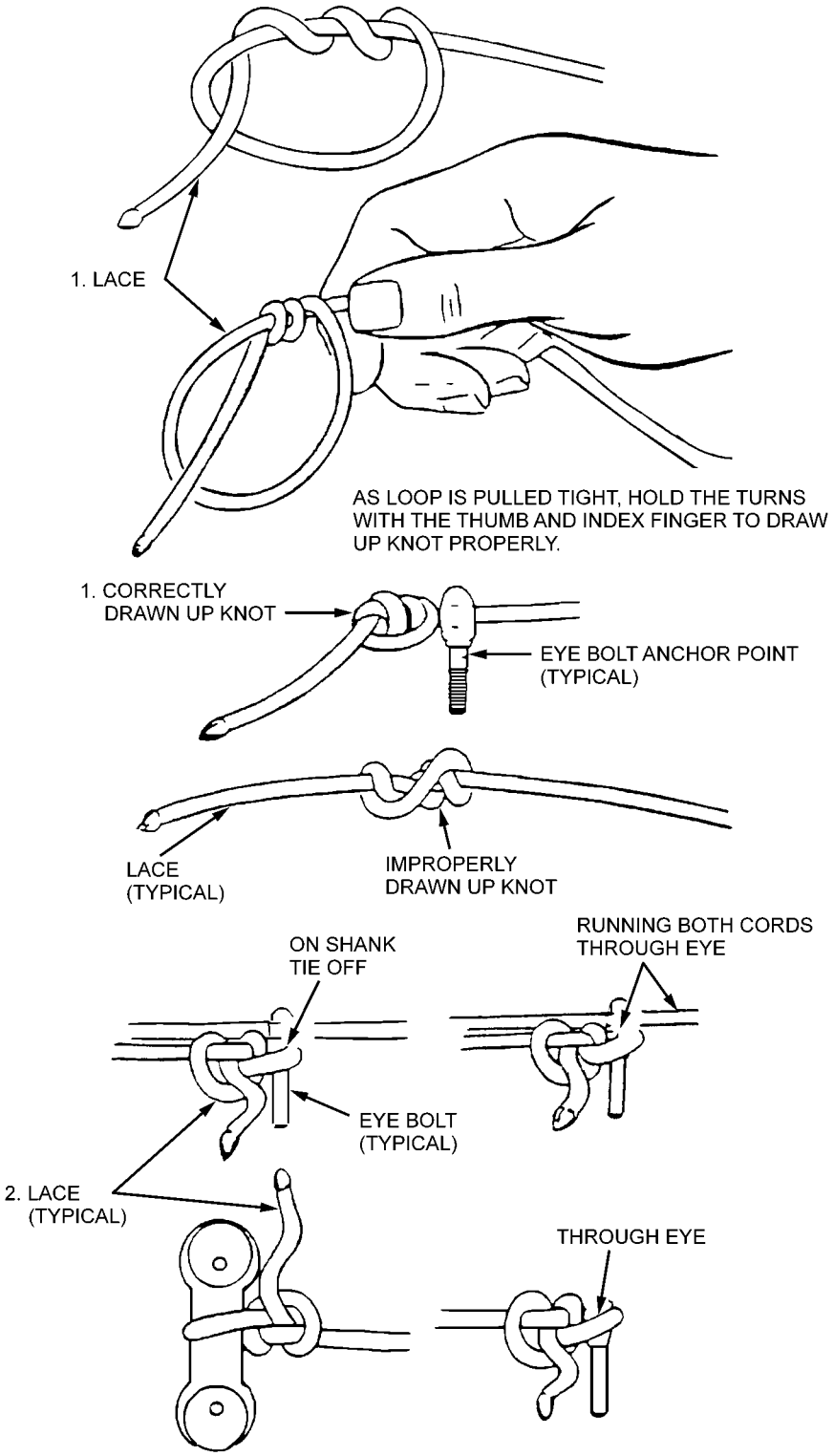

TO-1-1-3-094

Figure 9-35. Lacing Cord Knots

MATERIAL	DESCRIPTION	PART NUMBER
PERFORATED RELEASE FILM		WL5200B
TACKY TAPE/ZINC CHROMATE TAPE		213-3 OR EQUIVALENT
BREATHER CLOTH		AIRWEAVE N-10
BAGGING FILM	NYLON OR POLYVINYL ALCOHOL (PVA) FILM	KM1300-54
VACUUM REGULATOR GAUGE	0 TO 30 INCHES HG SCALE	UA20H4L OR EQUIVALENT

TO-1-1-3-104

Figure 9-36. Materials and Repair Set-Up

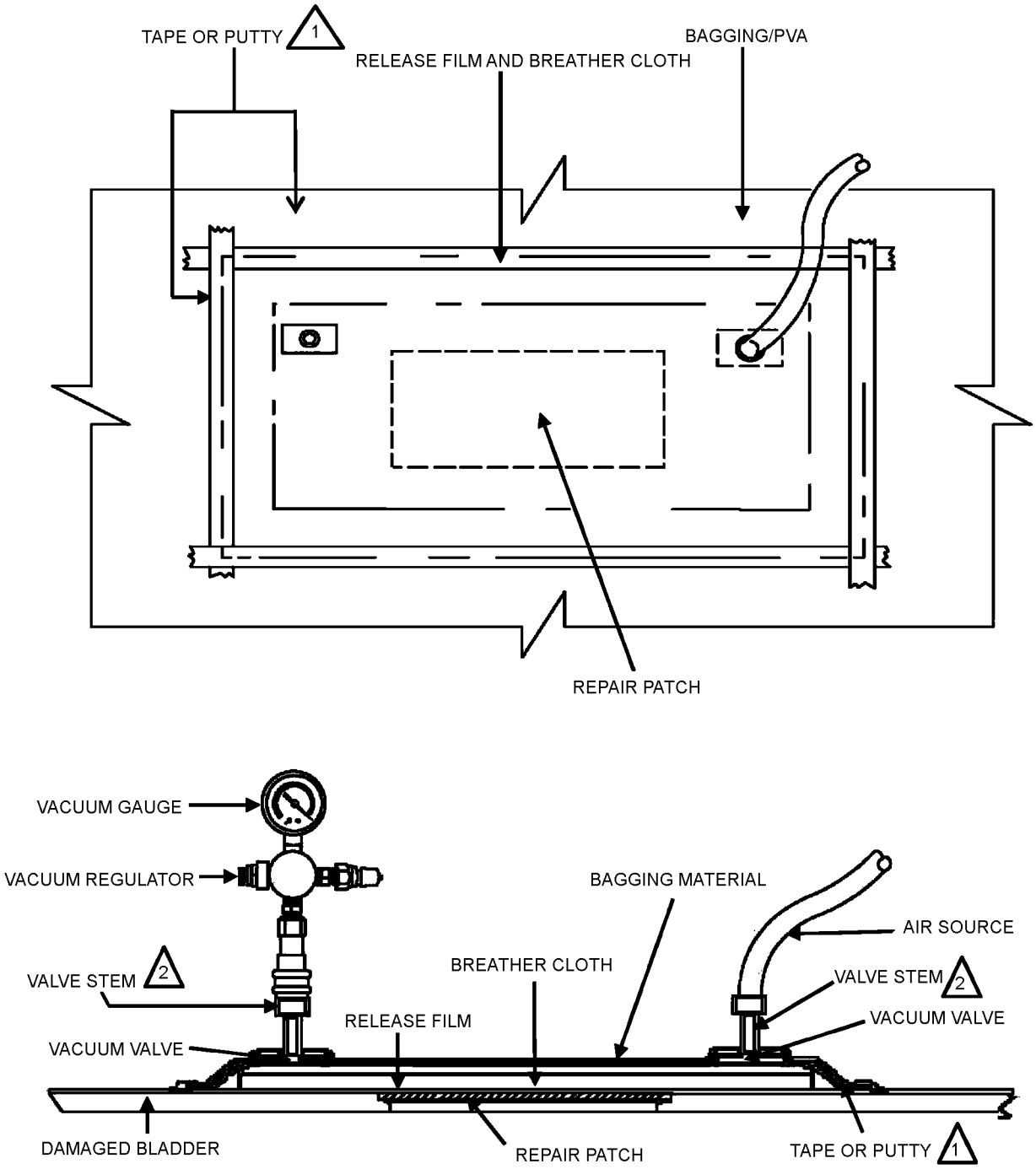

Δ1 A CONTINUOUS 1/2 INCH WIDE STRIP OF PUTTY MAY BE USED IN LIEU OF TACKY TAPE TO SEAL VACUUM BAG.

Δ2 TAPE OR PUTTY MAY BE USED AROUND THE CONNECTION OF THE VALVE STEM AND VACUUM VALVE TO ENSURE BAGGING HAS AN AIR-TIGHT SEAL.

TO-1-1-3-105

Figure 9-37. Materials and Repair Set-Up

APPENDIX A

SHELF LIFE UPDATE METHOD BASE LEVEL (FIELD)

A.1 SHELF LIFE UPDATING.

To be used for MIL-S-8802, MIL-S-83430, MIL-S-81733, and AMS 3276 fuel tank sealants. Each batch of material should be tested separately. Randomly select one sealant kit per batch for testing.

A.2 PERFORM VISUAL INSPECTION.

A.2.1 All Packaging Except Two-Component Kits.

a. Visually examine containers to insure the lid seal has not been broken. Discard both base and accelerator if the seal on either is broken.

b. Open both containers (base and accelerator) and check for skinning. If skinning has occurred in either base or accelerator, discard both.

c. Stir both base and accelerator. Both materials should blend well and without lumps or streaks. Discard both if either material has any evidence of lumps or streaks.

A.2.2 Two-Component Kits. Check cartridge for evidence of cracks or loss of material.

A.3 PERFORMANCE TESTING.

a. Mix material in accordance with manufacturer's instructions. Material should mix well with no streaks.

b. Apply mixed material to an aluminum panel coated with MIL-C-27725, fuel tank coating. Form a bead of material approximately one-eighth to one-quarter inch high and three inches to six inches long. Material should flow well and wet the surface easily. Tool bead to make sure no air is entrapped. Discard if material does not flow easily or wet the surface easily. Record time and date.

c. After the rated tack-free time, place a piece of polyethylene plastic film into the sealant. Quickly remove the plastic film from the sealant. No sealant should remain on the film. If any sealant transfers, discard the sealant.

d. After the rated cure time, the sealant should be firm but flexible. Push against the sealant with a tongue depressor or other blunt instrument. Sealant should adhere well to the surface. Any indication of no adhering is cause for rejection.

A.4 DELETED.

APPENDIX B
ITEM UNIQUE IDENTIFICATION (IUID) SUPPORTING INFORMATION

B.1 INTRODUCTION.

B.1.1 Scope. This appendix provides supporting information for IUID implementation. The intent of this Appendix is to provide sufficient information to help facilitate a standardized approach to identifying IUID requirements and applications for affected parts and equipment in this Technical Order (TO). The tasks within this Appendix are structured to provide some guidance, and to improve the overall IUID process. Tables and illustrations are incorporated for parts and material identification and to identify the proper IUID application. The information contained herein is intended for compliance. This requirement for IUID applies to all future configurations (dash numbers) if form, fit, function, and label placement area are not changed.

B.2 APPLICATION OF IUID LABEL.

a. Prior to label application, clean surface of applicable part in accordance with General Standard Shop Practices, TO 00-25-234 and reference to Methods and Procedures Manual Asset Marking and Tracking Item Unique Identification (IUID) Marking Procedures, TO 00-25-260 as applicable. Allow surface to dry completely before label application.

b. Reference applicable drawing and parts list.

ADHESIVE, PU-156 1

ADHESIVE, 82C32 2

ADHESIVE, LP729 3

c. Place IUID label in plastic sleeve, then apply adhesive to back of sleeve. For fuel cells constructed of Vithane, use 82C32 adhesive. For fuel cells constructed of rubber, use LP729 or PU-156 adhesive.

d. Place the plastic sleeve, with label and adhesive, on the prepared surface. Apply pressure by rubbing the sleeve surface to thoroughly activate the adhesive and to ensure the label and sleeve are attached securely. Allow label to set undisturbed for one hour.

e. Flatten the sleeve to remove air pockets from the inside of the sleeve. Overcoat the edges of the plastic sleeve by 0.25 inch on all sides, using the adhesive specified in Step a. Allow overcoat to set undisturbed for one hour.

Table B-1. IUID Parts List

Part Number	Noun	IUID Label Figure	IUID Label Part Number	Surface Preparation	Application/ Verification
695733-1	Tank, Fuel, Aircraft	Figure B-1	200733803-01	REF: Paragraph B.2	REF: TO 00-25-260

Table B-1. IUID Parts List - Continued

Part Number	Noun	IUID Label Figure	IUID Label Part Number	Surface Preparation	Application/ Verification
695733-2	Tank, Fuel, Aircraft	Figure B-1	200733803-01	REF: Paragraph B.2	REF: TO 00-25-260
695734-1	Tank, Fuel, Aircraft	Figure B-2	200733803-01	REF: Paragraph B.2	REF: TO 00-25-260
695734-2	Tank, Fuel, Aircraft	Figure B-2	200733803-01	REF: Paragraph B.2	REF: TO 00-25-260
695734-3	Tank, Fuel, Aircraft	Figure B-2	200733803-01	REF: Paragraph B.2	REF: TO 00-25-260
695734-4	Tank, Fuel, Aircraft	Figure B-2	200733803-01	REF: Paragraph B.2	REF: TO 00-25-260
695735-1	Tank, Fuel, Aircraft	Figure B-3	200733803-01	REF: Paragraph B.2	REF: TO 00-25-260
695735-2	Tank, Fuel, Aircraft	Figure B-3	200733803-01	REF: Paragraph B.2	REF: TO 00-25-260

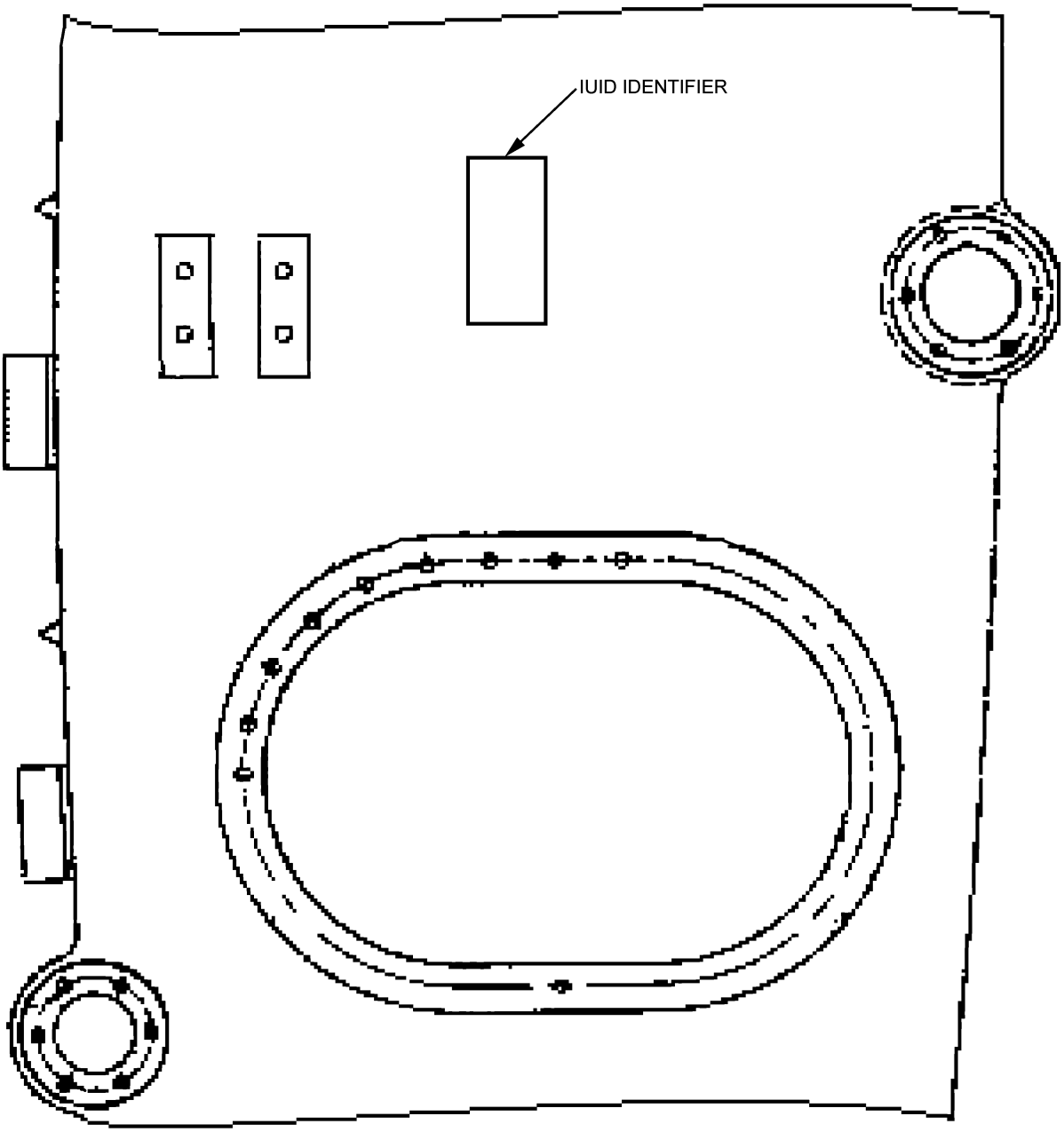

NOTE:

LOCATION OF LABEL IS APPROXIMATE. LABEL SHOULD BE PLACED ADJACENT TO EXISTING IDENTIFICATION MARKINGS, BUT SHOULD NOT COVER EXISTING IDENTIFICATION MARKINGS. LABEL NTS.

TO-1-1-3-106

Figure B-1. IUID Identifier, PNs 695733-1, 695733-2 (Not to Scale)

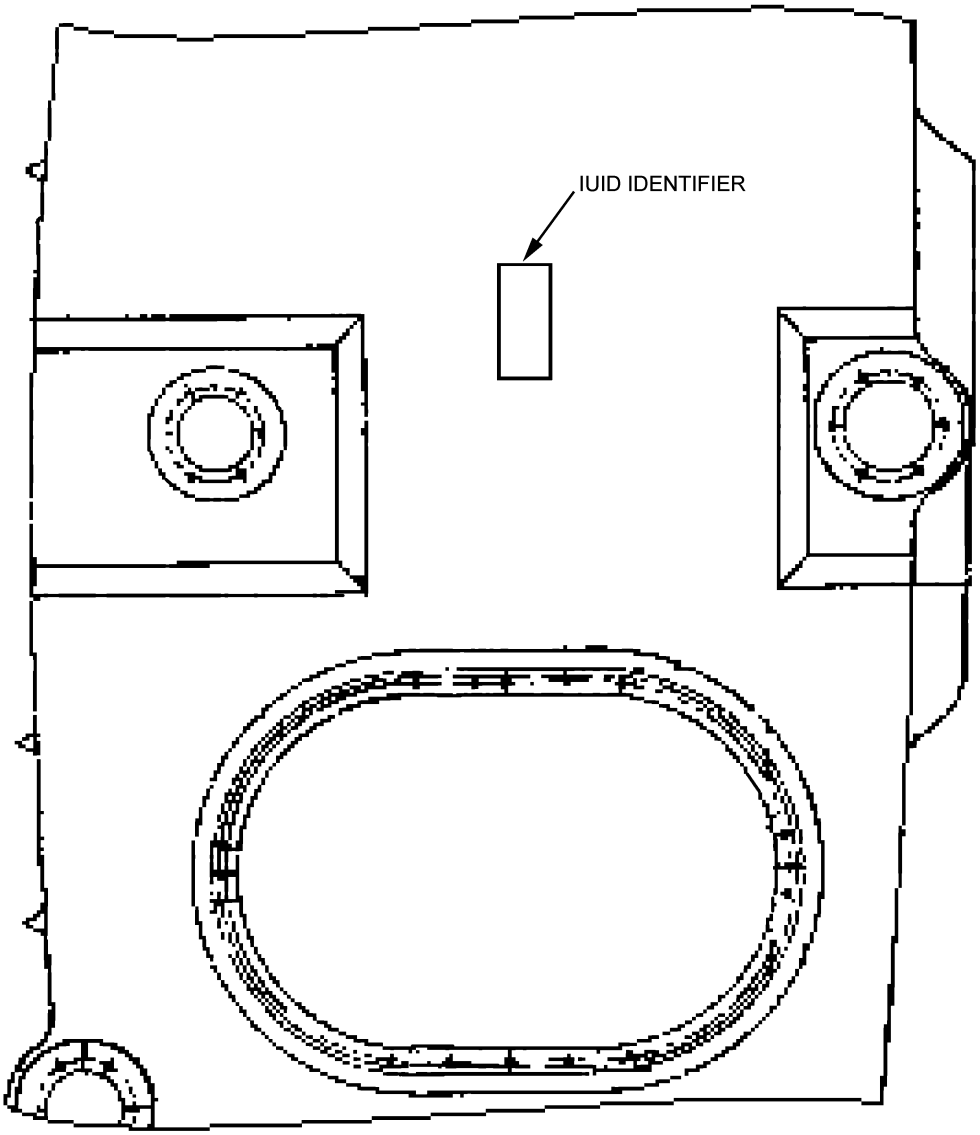

NOTE:

LOCATION OF LABEL IS APPROXIMATE. LABEL SHOULD BE PLACED ADJACENT TO EXISTING IDENTIFICATION MARKINGS, BUT SHOULD NOT COVER EXISTING IDENTIFICATION MARKINGS. LABEL NTS.

TO-1-1-3-107

Figure B-2. IUID Identifier, PNs 695734-1, 695734-2, 695734-3, 695734-4 (Not to Scale)

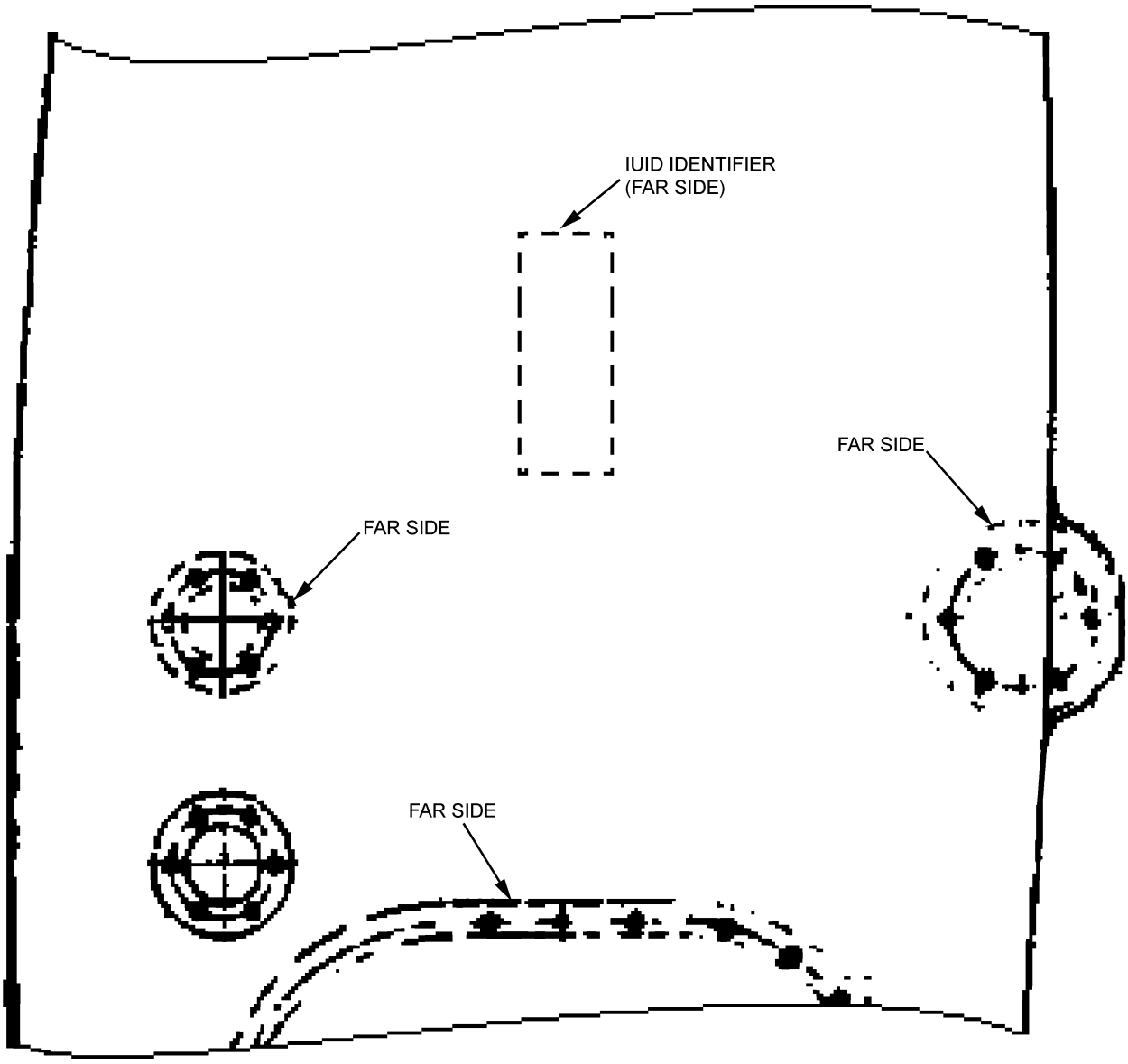

NOTE:

LOCATION OF LABEL IS APPROXIMATE. LABEL SHOULD BE PLACED ADJACENT TO EXISTING IDENTIFICATION MARKINGS, BUT SHOULD NOT COVER EXISTING IDENTIFICATION MARKINGS. LABEL NTS.

TO-1-1-3-108

Figure B-3. IUID Identifier, PNs 695735-1, 695735-2 (Not to Scale)

GLOSSARY

A

ABRADE — To prepare a surface for cementing or sealing by roughening.

ABRADED AREA — Scuffed area where the surface has been roughened either in preparation for cementing or sealing or accidental damage from such as chafing.

ABSOLUTE SEALING — Level of sealing for integral tanks which requires all seams, voids, slots, holes and fasteners penetrating the tank to be sealed leak free.

ACCELERATOR — The curing agent used in multiple part curing type sealants.

ADHESION — The property of a material that makes it stick to another material.

ADHESION PROMOTER — Material applied to a surface to enhance curing type sealant adhesion.

ADHESIVE SEALING — A method of sealing laying surfaces using a structural adhesive to form a primary seal.

AFFF — Aqueous Film Forming Foam. A fire suppression agent.

AFOSH-STD — Air Force Occupational Safety and Health Standard

ATTENDANT — A trained individual outside of the confined space who acts as the observer of the entrant.

B

BASE COMPOUND — The major component of a multiple part curing type sealant, usually synthetic rubber.

BLADDER TANK — See FUEL CELL.

BLISTER — A raised spot on the surface or a separation between the plies of a fuel cell which usually forms a void or air filled space.

BONDING — The equalization of static electricity charges between two or more objects.

BOUNDARY STRUCTURE — The fuel-tight primary structure of an integral tank which forms the tank boundaries. Comprised of skin panels, bulkheads and spars.

BUFFING — A method of abrasion which forms a roughened or velvety surface.

C

CAVITY — The structural members surrounding a fuel cell which act as a secondary container and help support the fuel cell.

CENTERLINE GROOVE — An injection sealing groove machined along the fastener line.

CHANNEL — A passage formed by structural discontinuity or a groove machined into a faying surface.

CHANNEL SEAL — See INJECTION SEAL.

CHECKING, WEATHERING OR OZONE — Short small cracks on the surface of a fuel cell, generally caused by environmental conditions.

COHESION — The property of a material that holds it together.

CONFINED SPACE — Any space with limited ingress and egress which can be bodily entered.

CORROSION PREVENTIVE COMPOUND — A material applied to a surface to provide corrosion resistance.

CPR — Cardiopulmonary Resuscitation.

CRAZING — A surface irregularity characterized by many hairline indentions or ridges.

CURE — The metamorphosis of a curing type sealant from a soft state to a firm rubbery condition.

D

DELAMINATION — The separation of plies on a fuel cell or composite material.

DEPUDDLING — The removal of fuel or other liquid puddles from cells or tanks. Depuddling is usually accomplished with a sponge and bucket or air operated vacuum system.

DESEAL — Removal of sealant from a surface.

DESEALANT — A material used to remove or loosen some curing type sealants.

DESIGNATED ALTERNATE ENTRY AUTHORITY — An individual designated by the entry authority to issue field permits. This individual shall be listed on the master permit.

DOME NUTS — Plate nuts with a mechanical seal at the base and a cap over the top to provide a fuel fight seal.

DRAINING — The removal of fuel or other liquids from cells or tanks via the aircraft fuel system drains.

E

EMERGENCY COMMUNICATIONS — Any type of communications link which is available for requesting emergency assistance.

ENTRANT — An employee who is trained and authorized to enter a confined space.

ENTRY — Any act which results in any part of an employee's body breaking the plane of the opening of a confined space or enclosed area. Includes any ensuing work in the confined space or enclosed area.

ENTRY AUTHORITY — The individual authorized by the MXG/CC or LG/CC to issue field permits. Usually the Fuel Section Chief.

ENTRY PERMIT — The permit authorizing entry into a confined space.

ENTRY PERMIT SYSTEM — A system for ensuring safe entry in a confined space, i.e., integral tank or fuel cell.

ENTRY SAFE — Conditions at which it is safe to enter a confined space. In general conditions are: 10% LEL or (600 ppm) 20% LEL or (1200 ppm) for foam removal), oxygen level between 19.5% and 23.5% and toxicity limits within the limits prescribed on the master permit.

EXPLOSION PROOF APPARATUS — An apparatus enclosed in a case that is capable of withstanding an explosion of a specified gas or vapor which may occur within it and of preventing the ignition of a specified gas or vapor surrounding the enclosure by sparks, flashes or explosion of the gas or vapor within and which operates at such an external temperature that a surrounding flammable atmosphere will not be ignited thereby.

EXTERNAL MOUNTED FUEL SYSTEM COMPONENT — A fuel system, or related, component mounted in such a manner that it is not necessary to enter a fuel cell or integral tank (other than hand entry) to remove, replace or repair the component.

F

FAYING SURFACE — Surfaces which are extremely close together.

FAYING SURFACE SEAL — A seal between mating surfaces to prevent corrosion or to prevent fuel from traveling along or through mating surfaces.

FILLET SEAL — A primary seal applied along the edges of faying surfaces and over, along and between installed parts.

FIRE SAFE — An atmospheric concentration of combustible vapors equal to or less than 20% LEL or (1200 ppm).

FIRST FILLET (UNDER-SIZE FILLET) — The first small bead or under-size fillet of curing type sealant applied to a surface.

FIT JIG — A structure built to duplicate a fuel cell cavity. Used to ensure cell fitting locations and hangars are correctly positioned.

FRIED OR SCARRED CONDITION — Depressed areas in fuel cell liner, caused by air or solvent vapor trapped between the liner material and building form.

FUEL CELL — A flexible bag contoured to the shape of a fuselage or wing cavity and designed to contain a liquid. Three basic types of cells are bladder, self-sealing and a combination.

ACTIVATION — A condition which occurs in self-sealing cells when fuel contacts the sealant causing the sealant to swell.

BAFFLE SHOES — Fabric straps attached to the liner of a cell to secure the internal baffles to cell walls.

FITTING — Attaching points of a fuel cell for functional equipment such as pumps, vents or outlets.

HANGAR STRAP — An exterior attachment to a fuel cell, usually made of loop of webbing, used to support a fuel cell installed in aircraft and storage containers.

HANGAR SUPPORT — An exterior attachment to a fuel cell, usually made of loop of webbing, used to attach fuel cell to aircraft structure for support.

INNER LINING — First ply of fuel cell material, functions as a support and protects nylon barrier. May be constructed of fabric or rubber.

SELF SEALING — A cell designed to automatically seal itself when punctured.

SELF SUPPORTING — A cell designed to support itself without support from surrounding structures.

SEPARATIONS — Areas of non-adhesion between cell plies but exhibit no evidence of trapped liquid.

FUEL LEAKS — Refer to TO 00-25-172 for more information on Class 1, 2, and 3 leaks.

CLASS 1 — Involve an area less than two feet in any direction.

CLASS 2 — Involve an area not over 10 feet in any direction, or not over 50 square feet.

CLASS 3 — Involve an area over 10 feet in any direction, or over 50 square feet.

FULL-BODIED FILLET — A bead of curing-type sealant conforming to final required dimensions of fillet seal.

G

GROOVE SEAL — See INJECTION SEAL.

GROUNDING — The removal of a static electrical charge from the surface of an object by connecting the object to an approved ground.

I

IDLH — Immediately Dangerous to Life or Health (IDLH) means an atmosphere that poses an immediate threat to life, would cause irreversible adverse health effects, or would impair an individual's ability to escape from a dangerous atmosphere.

INERTING — The replacement of oxygen in the atmosphere with a gas to the point the atmosphere will not support combustion or explosion.

INJECTION SEAL — A seal accomplished by injecting a curing type or non-curing type sealant into holes, channels and other voids in fuel tank boundaries.

INTEGRAL FUEL TANK — Any cavity designed to hold fuel or other liquid.

INTERFERENCE SEAL (FASTENER) — A seal produced by metal-to-metal contact between a fastener and its mating hole.

INTRINSICALLY SAFE — Equipment and wiring that is not capable of producing sufficient electrical or thermal energy under normal or abnormal conditions to cause ignition of a flammable or combustible atmospheric mixture in its most easily ignitable concentration.

ISOLATION SEAL — A repair seal composed of structure, fasteners and sealing materials which reestablishes seal continuity and that is in immediate contact with the fuel being contained.

ISOLATION SEAL — A short seal installed on some tanks to isolate potential leakage, such as channeling of fuel along a leak path between structural members.

L

LAP SEAM — A seam made by placing the flat edge of one piece of material over the edge of a second piece of material or over itself.

LEAK EXIT — The point outside of a tank where a leak first appears.

LEAK PATH — The path or trail leaking fuel follows from the leak source to the leak exit point.

LEAK SOURCE — The place inside the tank where the leak originates.

LEL — Lower Explosive Limit is the lowest concentration of flammable or combustible vapors which can be ignited by a spark or flame.

M

MASTER ENTRY PLAN — A letter issued by the MXG/CC or equivalent (with coordination from Safety, Bioenviromental Engineering Flight (BEF) and the Fire Department) qualifying the Entry Authority and Designated Alternate Entry Authority and the conditions under which the Entry Permit may be issued.

MECHANICAL SEAL — A seal produced by deformation of an elastic material due to interference at the contacting surfaces as in access doors or O-rings.

MIL-STD — A United States Defense Standard, often called a military standard, “MIL-STD”, “MIL-SPEC”, or (informally) “MilSpecs”, is used to help achieve standardization objectives by the U.S. Department of Defense.

MSDS — Material Safety Data Sheet. Supplied by manufacturers to inform customers of hazards associated with their product.

N

NFPA CODES — National Fire Protection Association Codes. A list of accepted practices to prevent fires. In general the Air Force accepts most of the codes.

O

OFF-PRESSURE SEAL — A level of sealant applied outside of the seal plane.

OSHA-STD — Occupational Safety and Health Standards. The federal law covering worker and work place safety/health.

P

PARTING AGENT — A material used to prevent sealant from sticking to a surface.

PERMANENT REPAIR — A repair which returns a tank to a no leak condition.

PERMIT REQUIRED CONFINED SPACE — All integral tanks and fuel cells capable of being entered.

PLASTICIZER — An additive in rubber or plastic to increase the pliability or low temperature flexibility of the finished product.

PLY — A layer of basic fuel cell construction, either fabric or non-fabric.

POST ASSEMBLY SEAL — A seal that has been applied after the tank structure has been assembled. (See FILLET SEAL and INJECTION SEAL.)

PPE — Personal Protective Equipment. Refer to AFI 91-203.

PRECOAT SEAL — The application of a coat of brushable sealant to serve as a base for fillet seal. (See BRUSHCOAT.)

PREPACK SEAL — A seal applied during tank assembly by packing inside and areas which are not readily accessible without disassembly with a curing type sealant.

PRIMARY SEAL — A seal which by itself, can contain fuel and requires no additional seals. (See ABSOLUTE SEAL.)

PURGE — A process which removes flammable or combustible fluids and vapors.

R

REDUNDANT SEAL — The use of two primary sealing systems, or seals in which one acts as a backup for the other.

RESCUE TEAM — A group of two or more specially trained employees (preferable fuel system repair specialist (AFSC 2A6X4, 2A3X3F (RPA Mechanic) or equal)) who are designated to rescue entrants from confined spaces.

S

SCOTCHWELD SEAL — A General Dynamics sealing system design using AF-10 structural adhesive.

SEAL PLANE — All surfaces of a tank which establish fuel seal continuity and are in immediate contact with fuel.

SEALANT, CURING TYPE — A multiple part sealant which changes, after mixing, from a soft state to a rubber-like tack-free condition.

SEALANT, NON-CURING TYPE — A sealing material that does not cure with time, retaining its original semi-liquid condition. Commonly used in channel grooves.

SEALING GROOVE — Grooves machined in the faying surface of a fuel tank boundary for injection sealant.

SECONDARY SEAL — A seal which by itself will not constitute a reliable primary seal.

SELF-SEALING FASTENER — A fastener which provides a fuel-tight seal without the application of sealant.

STATIC ELECTRICITY — The accumulation of an electrical charge on a person or object due to friction, wind or induction.

T

TACK-FREE — The condition of a sealant during the curing stage when the sealant will not stick to polyethylene plastic when pressed lightly to the surface.

TASK — Any designated work, e.g., inspection, repair, etc.

TEMPORARY REPAIR — A repair designed to down grade leak classifications to a flyable condition until such time as a permanent repair is applied.

TOP COAT — A material applied over the fuel exposed surfaces of some curing type sealants to protect the sealant from deterioration.

U

UL — Underwriters Laboratories® Inc. is an independent product safety certification organization.

V

VENTILATION — The process of supplying air to a tank or cell after a fluid purge.

VOID — Any opening, small crack or crevice occurring at the juncture of structural members.

VOID SEAL — A seal used to fill holes, joggles, channel, and other voids caused by the buildup of structure in a fuel tank; and which provides continuity of sealing where fillet seals are interrupted by these structural gaps.

W

WET INSTALLED FASTENER — A fastener which is coated on the shank and under the head with a curing type sealant to provide a corrosion barrier and a secondary seal.

WETTED SURFACE — Any surface which is in direct contact with fuel.