TO 36-1-191

TECHNICAL MANUAL

TECHNICAL AND MANAGERIAL REFERENCE FOR MOTOR VEHICLE MAINTENANCE

This publication supersedes TO 36-1-191 dated 15 December 2004, and TO 36-1-191, Change 1, dated 1 July 2005.

DISTRIBUTION STATEMENT A - Approved for public release; distribution is unlimited (WR-ALC/PA Public Affairs Certification Number 05-07418). Other requests for this document shall be referred to 584 CBSS/GBHDE, Robins AFB, GA 31098. Questions concerning technical content shall be referred to 580 CBSS/GBZVG.

Published Under Authority of the Secretary of the Air Force

20 JULY 2007

LIST OF EFFECTIVE PAGES

INSERT LATEST CHANGED PAGES. DESTROY SUPERSEDED PAGES.

NOTE The portion of the text affected by the changes is indicated by a vertical line in the outer margin of the page. Changes to illustrations are indicated by shaded or screened areas, or by miniature pointing hands.

Dates of issue for original and changed pages are:

Original. . . . . .0 . . . . . 20 July 2007

TOTAL NUMBER OF PAGES IN THIS PUBLICATION IS 342, CONSISTING OF THE FOLLOWING:

Page No.	*Change No.	Page No.	*Change No.	Page No.	*Change No.
Title	0				
A	0				
i - xiii	0				
xiv Blank	0				
xv	0				
xvi Blank	0				
xvii	0				
xviii Blank	0				
1-1 - 1-16	0				
2-1 - 2-79	0				
2-80 Blank	0				
3-1 - 3-24	0				
4-1 - 4-39	0				
4-40 Blank	0				
5-1 - 5-8	0				
6-1 - 6-57	0				
6-58 Blank	0				
7-1 - 7-18	0				
8-1 - 8-64	0				
9-1 - 9-4	0				
A-1 - A-10	0				

* Zero in this column indicates an original page.

TABLE OF CONTENTS

Chapter		Page
	LIST OF ILLUSTRATIONS	xii
	LIST OF TABLES	xiii
	FOREWORD	xv
	SAFETY SUMMARY	xvii
1	SERVICEABILITY STANDARDS	1-1
1.1	PURPOSE	1-1
1.2	SCOPE	1-1
1.3	DEFINITIONS	1-1
1.4	GENERAL INSPECTION POLICIES	1-1
1.5	LIMITED TECHNICAL INSPECTION	1-1
1.5.2	Disposition Inspections	1-1
1.5.3	Receiving/Acceptance Inspections	1-2
1.5.3.1	Records Inspection	1-2
1.5.3.2	Inspection	1-2
1.5.4	Used Vehicles (Receiving Inspection)	1-2
1.5.4.1	Serial Numbers (Vehicle Identification Number or VIN)	1-3
1.5.5	New Vehicles (Acceptance Inspection)	1-3
1.5.5.1	Serial Numbers (Vehicle Identification Number or VIN)	1-3
1.5.6	Shipping Inspections	1-3
1.5.6.1	Transfer (Vehicle Being Transferred to Another Installation)	1-3
1.5.6.2	Conus Shipment	1-3
1.5.6.3	Overseas Shipment Air Force Installations	1-3
1.5.6.4	Overseas Shipment for Contingency and Mobility Support	1-4
1.5.7	Military Assistance Program	1-4
1.5.8	Depot Repair/Rebuild Request	1-5
1.6	GENERAL INSPECTION STANDARDS	1-5
1.6.1	Appearance	1-5
1.6.2	Tools	1-5
1.6.4	Seals, Oil and Grease	1-6
1.6.5	Bearings, Anti-Friction Ball and Roller	1-6
1.6.6	Operational Test	1-6
1.6.6.1	Power	1-6
1.6.6.2	Unusual Noises	1-6
1.6.6.3	Compression	1-6
1.6.7	Vacuum Tests	1-6
1.6.8	Pollution/Emissions Control Devices	1-6
1.7	MINIMUM SERVICEABILITY STANDARDS	1-6
1.7.1.1	Configuration Control	1-6
1.7.2.1	Agitator	1-7
1.7.2.2	Air and Hydraulic Motors	1-7
1.7.2.3	Air Cleaner and Pre-Cleaner	1-7
1.7.2.4	Air Compressor	1-7
1.7.2.5	Air Hydraulic Cylinder	1-7
1.7.2.6	Air Governor	1-7
1.7.2.7	Air Tanks, Lines, and Valves	1-7
1.7.2.8	Antifreeze Protection	1-7
1.7.2.9	Apron and Tail Gate	1-7
1.7.2.10	Automatic Fire Extinguisher System	1-7
1.7.2.11	Auxiliary Fire Extinguishers/Brackets	1-7
1.7.2.12	Axle, Front	1-7
1.7.2.13	Axle, Intermediate	1-7
1.7.2.14	Axle, Rear	1-7
1.7.2.15	Axle, Steerable Rear	1-7
1.7.2.16	Battery/Battery Box/Battery Clamps	1-7
1.7.2.17	Belts, “V” and Serpentine	1-8
1.7.2.18	Bits, Augers, Drills, and Attachments	1-8
1.7.2.19	Blowers, Boilers, and Burners	1-8
1.7.2.20	Body and Cab	1-8
1.7.2.21	Bogies Suspension (Trunnions/ Torque Rods/Bushings)	1-8
1.7.2.22	Boom (Crane and Wrecking Equipment), Mast Assembly, and Insulated Booms	1-8
1.7.2.23	Brake System (Parking Hand)	1-8
1.7.2.24	Brake System (Service)	1-8
1.7.2.25	Brakes (Steering)	1-9
1.7.2.26	Brush Guard and Grille	1-9
1.7.2.27	Bumpers and Push Plate	1-9
1.7.2.28	Cables	1-9
1.7.2.29	C.B. System, Dry Chemical, Halon System, Etc. (Fire Extinguisher Equipment)	1-9
1.7.2.30	Canvas	1-9
1.7.2.31	Carburetor, Fuel Injector/Governor, and Injector Pump	1-9
1.7.2.32	Carriage Lift Forks and Mast Assembly	1-9
1.7.2.33	Centerpin or Gidgeon (Revolving Shovel Crane, Deicer, Manlift, or Work Platform Type Assests	1-9
1.7.2.34	Chains	1-9

TABLE OF CONTENTS - CONTINUED

Chapter		Page
1.7.2.35	Clutch	1-10
1.7.2.36	Coil and Supressors	1-10
1.7.2.37	Commutator and Slip Rings	1-10
1.7.2.38	Controller, Contractor and Accelerator Resistor	1-10
1.7.2.39	Cooling System	1-10
1.7.2.40	Coolant System Pumps (Crashfire Trucks)	1-10
1.7.2.41	Conveyors (Applicable to Loaders, Graders, Ditchers, Etc.)	1-10
1.7.2.42	Cutting Edges (Scrapers, Runners, Shoes and End Bits Applicable to Dozers, Graders, Rooters, Drag Lines, etc.)	1-10
1.7.2.43	Cylinders (Hydraulic)	1-10
1.7.2.44	Cylinder Head and Engine Block	1-10
1.7.2.45	Differential/Final Drive	1-10
1.7.2.46	Dipper, Clamshell, Dragline, Back Hoe and Hook Block	1-10
1.7.2.47	Distributor and Ignition Systems	1-10
1.7.2.48	Drawbar/Tow Bar	1-10
1.7.2.49	Drive/Propeller Shafts and U-Joints	1-11
1.7.2.50	Drums, Elevators, and Discharge Chutes	1-11
1.7.2.51	Eccentric Shaft or Sleeve	1-11
1.7.2.52	Electric Motors	1-11
1.7.2.53	Engine, Air/Liquid Cooled	1-11
1.7.2.54	Exhaust System	1-11
1.7.2.55	Fairleads (Cranes)	1-11
1.7.2.56	Fifth Wheel	1-11
1.7.2.57	Filter Differential and Pumping Pressure	1-11
1.7.2.58	Floodlight and Spotlights	1-11
1.7.2.59	Floors	1-11
1.7.2.60	Foam Meter (Crash Fire Equipment)	1-11
1.7.2.61	Frame	1-11
1.7.2.62	Fuel Pump/Fuel Filter	1-12
1.7.2.63	Fuel Tank and Lines	1-12
1.7.2.64	Gauges and Sending Units	1-12
1.7.2.65	Gantry, A-Frame, and Revolving Base	1-12
1.7.2.66	Generators/Alternators/Auxiliary Chargers, etc.	1-12
1.7.2.67	Grapnel and Hooks	1-12
1.7.2.68	Hammers, Jaw Linings, Plates, and Rolls	1-12
1.7.2.69	Heaters/Defrosters	1-12
1.7.2.70	Heater Exchanger and Evaporator	1-12
1.7.2.71	Heater Flues and Stacks (Distributors)	1-12
1.7.2.72	Heater Tubes and Flues (Oil Servicing Units)	1-12
1.7.2.73	Hinges and Latches	1-12
1.7.2.74	Hoisting Control Units	1-12
1.7.2.75	Hoisting and Topping Winch Controls	1-12
1.7.2.76	Horn	1-12
1.7.2.77	Hoses, Nozzles, and Pumps (Fuel Servicing Types)	1-12
1.7.2.78	Hose Reel System (Fuel and Fire Units)	1-13
1.7.2.79	Hydraulic System	1-13
1.7.2.80	Ignition Wires (Secondary)	1-13
1.7.2.81	Inter-Cooler and After-Cooler	1-13
1.7.2.82	Interior Trim	1-13
1.7.2.83	King Pin and Fifth Wheel Plate	1-13
1.7.2.84	Landing Gear	1-13
1.7.2.85	Lights	1-13
1.7.2.86	Line Strainers, Baskets	1-13
1.7.2.87	Manhole Vents	1-13
1.7.2.88	Manifolds (Intake and Exhaust)	1-13
1.7.2.89	Meters	1-13
1.7.2.90	Mirrors	1-13
1.7.2.91	Moldboard	1-13
1.7.2.92	Mowers, Sickle, Guards, and Pitman	1-13
1.7.2.93	Oil Filter and Coolers	1-13
1.7.2.94	Oil Pans and Covers	1-13
1.7.2.95	Oil Pumps and Relief Valves	1-14
1.7.2.96	Painting and Marking	1-14
1.7.2.97	Pintle Hook and Trailer Type Connection	1-14
1.7.2.98	Power Controls and Winches	1-14
1.7.2.99	Pumps (Fire)	1-14
1.7.2.100	Rectifier	1-14
1.7.2.101	Refrigeration and Air Conditioners	1-14
1.7.2.102	Rotors and Paddles	1-14
1.7.2.103	Scarifier	1-14
1.7.2.104	Seats	1-14
1.7.2.105	Seat Belts/Restraint Device	1-14
1.7.2.106	Segregators	1-14
1.7.2.107	Shock Absorbers	1-14
1.7.2.108	Sling Mechanism and Controls	1-14
1.7.2.109	Solid Tires	1-14
1.7.2.110	Spark Plugs	1-14
1.7.2.111	Speedometer, Tachometer, or Hour Meter	1-14
1.7.2.112	Spray Bars, Piping, and Connections	1-14
1.7.2.113	Springs	1-14
1.7.2.114	Starter/Solenoid	1-15
1.7.2.115	Static Ground	1-15
1.7.2.116	Steering Gear and Components	1-15
1.7.2.117	Switches	1-15

TABLE OF CONTENTS - CONTINUED

Chapter		Page
1.7.2.118	Tanks	1-15
1.7.2.119	Tires	1-15
1.7.2.120	Thermostat and Shutters	1-15
1.7.2.121	Tilt and Lift Control Mechanism	1-15
1.7.2.122	Transmissions, Transfers Cases, and Power Takeoffs	1-15
1.7.2.123	Turret System (Crash Fire)	1-15
1.7.2.124	Valves And Piston Rings	1-15
1.7.2.125	Voltage Regulator	1-16
1.7.2.126	Warning Devices (Backup)	1-16
1.7.2.127	Water/Foam Tank	1-16
1.7.2.128	Water Lock Valve	1-16
1.7.2.129	Wheels, Sprockets, and Tracks	1-16
1.7.2.130	Windshield and Windows	1-16
1.7.2.131	Wiper Motor, Blades, and Washers	1-16
1.7.2.132	Wiring and Connections	1-16
1.7.2.133	Certified vs. Qualified Welder	1-16
2	PAINTING, MARKING, AND LIGHTING	2-1
2.1	PURPOSE	2-1
2.2	REQUIREMENT FOR PAINTING	2-1
2.3	AUTHORIZED COLORS	2-1
2.4	GENERAL ADMIN USE VEHICLES	2-2
2.5	FIRE TRUCKS	2-2
2.6	AIRCRAFT REFUELING VEHICLES	2-2
2.7	LIQUID OXYGEN/NITROGEN TRANSPORTING	2-2
2.8	LAW ENFORCEMENT SEDANS	2-2
2.9	OTHER SPECIAL PURPOSE VEHICLES AND VEHICULAR EQUIPMENT	2-2
2.10	AMBULANCES	2-2
2.11	OSI VEHICLES	2-3
2.12	RECRUITING SERVICE	2-3
2.13	PAINTING OF VEHICLE TOPS WHITE	2-3
2.14	EXCESSIVE GLARE	2-3
2.15	INTERIORS	2-3
2.16	CAMOUFLAGE PATTERN PAINTING	2-3
2.17	THERMAL SPRAY EQUIPMENT	2-3
2.18	SAFETY PRECAUTIONS	2-4
2.19	PREPARATION FOR PAINTING	2-5
2.20	SPECIALTY COATINGS	2-6
2.20.2.2	Two-Part Zinc Rich Primer Coating System	2-6
2.20.3	Ceramic-Loaded Coatings	2-6
2.20.4	Spray-In Bed Liners	2-6
2.21	PRIME COATS	2-7
2.22	FINISH COATS	2-8
2.22.1	Finish Coats	2-8
2.22.5	Chemical Agent Resistant Coating (CARC) Paints	2-8
2.23	NON-SLIP MATERIALS	2-8
2.24	HVLP SPRAY GUN PROCEDURES	2-9
2.25	MARKINGS	2-9
2.26	ACTIVITY MARKINGS	2-10
2.27	ADDITIONS OR DEVIATIONS	2-10
2.28	REQUIREMENTS	2-11
2.29	CAMOUFLAGE	2-11
2.30	SPECIFICATIONS	2-11
2.31	SEMI-GLOSS DARK GREEN	2-11
2.32	MARKING REQUIREMENTS FOR VEHICLES USED ON LANDING AREAS	2-11
2.32.3	Harness Required Area	2-12
2.33	IDENTIFICATION MARKINGS	2-12
2.34	NATIONAL SYMBOL AND INTERNATIONAL MARKINGS	2-12
2.34.1	National Symbol	2-12
2.34.2	International Markings	2-12
2.35	TACTICAL MARKINGS	2-12
2.36	CONCEALED MARKINGS	2-12
2.37	DECALCOMANIA	2-12
2.38	SPECIAL MARKINGS	2-12
2.39	SIZE OF MARKINGS	2-13
2.40	LOCATION OF VEHICLE IDENTIFICATION MARKINGS	2-13
2.41	NATIONAL SYMBOL	2-13
2.42	AIR NATIONAL GUARD (ANG) VEHICLES	2-13
2.43	RESERVE OFFICERS' TRAINING CORPS VEHICLES	2-14
2.44	DECALCOMANIAS	2-14
2.44.1	Decal KPH to MPH	2-14
2.44.2	Decal Tower Signals or Control of Airdrome Traffic	2-14
2.44.3	Decal NHTSA Warning Label for 15 Passenger Vans	2-14
2.44.4	Additional Decals	2-14
2.45	SPECIAL MARKINGS	2-14

TABLE OF CONTENTS - CONTINUED

Chapter		Page
2.46	VEHICLES USED IN TRANSPORTING SICK AND INJURED	2-14
2.47	AUTOMOBILE, AMBULANCE (METROPOLITAN)	2-14
2.48	AMBULANCE (VAN/MODULAR TYPE COMMERCIAL, 4 × 2 AND 4 × 4 PAINTED WHITE)	2-15
2.49	AMBULANCE (VAN/MODULAR) 4 × 2 AND 4 × 4 PAINTED SEMI-GLOSS GREEN	2-15
2.50	BUS, 44 PASSENGER, CONVERTIBLE (MULTILITTER)	2-16
2.51	AUTOMOBILE, STATION WAGON	2-16
2.52	MOBILE MEDICAL VANS	2-16
2.53	RECRUITING VEHICLES	2-16
2.54	COMMUNICATIONS AND GROUND CONTROL APPROACH VEHICLES	2-17
2.55	TRACTORS AND FORKLIFTS	2-17
2.56	TIRE SIZE/TYPE AND INFLATION PRESSURE	2-17
2.57	SCHOOL BUS SAFETY MARKINGS	2-17
2.58	DOT MOTOR CARRIER SAFETY REGULATION MARKINGS	2-17
2.59	FUEL DISPENSING AND AIRCRAFT SERVICING VEHICLES	2-18
2.60	NO SMOKING WITHIN FIFTY FEET	2-18
2.61	PRODUCT IDENTIFICATION	2-18
2.61.5	Potable Water Trucks	2-18
2.62	PUMPING DURING COLD TEMPERATURES	2-18
2.63	MANHOLE COVER AND NOZZLE MARKINGS	2-19
2.63.1	Jet Fuel Dispensing Units	2-19
2.63.2	AVGAS Dispensing Units	2-19
2.64	HYDRANT FUELING TRUCKS	2-19
2.65	PURGING FLUID VEHICLES	2-19
2.66	WASTE FUEL VEHICLES	2-20
2.67	RECLAIMED FUEL VEHICLES	2-20
2.68	GASEOUS SERVICING TRAILERS	2-20
2.68.1	Material Identification	2-20
2.68.2	Service Point Markings	2-20
2.68.3	No Smoking	2-20
2.69	PROPELLANT SEMITRAILERS	2-20
2.70	FIRE FIGHTING VEHICLES	2-21
2.71	OPERATING INSTRUCTIONS	2-22
2.72	CONTINENTAL OR LYCOMING AIR-COOLED ENGINES	2-22
2.73	MARKING SECURITY FORCE VEHICLES	2-22
2.74	ALERT, REFLEX, BASE OPS, AND BASE CIVIL ENGINEER (FIRE MARSHAL)	2-23
2.75	“FOLLOW ME” VEHICLES	2-23
2.76	LOW VISIBILITY MARKING. SNOW REMOVAL EQUIPMENT	2-23
2.77	MARKING EXPLOSIVE ORDINANCE DISPOSAL VEHICLES	2-23
2.78	MARKING VEHICLES EQUIPPED WITH MS51335 AND CID A-A-52550 SERIES PINTLE HOOKS	2-23
2.79	SLOW MOVING VEHICLE EMBLEM	2-24
2.80	STRIKE HAZARD MARKINGS	2-24
2.81	CENTER OF BALANCE MARKINGS	2-24
2.82	NOISE HAZARD MARKING	2-24
2.83	MARKING CAMOUFLAGE PATTERN PAINTED VEHICLES	2-24
2.84	MARKING LAW ENFORCEMENT SEDANS	2-24
2.85	MARKING 41-PASSENGER INTERCITY BUSES USED FOR SUPPORT OF BANDS.	2-25
2.86	WRM MARKINGS	2-25
2.87	INSTALLATION OF REFLECTORIZED TAPE	2-25
2.88	REMOVAL OF REFLECTORIZED TAPE	2-26
2.89	REQUISITIONING OF MARKINGS	2-26
2.90	FIGURES	2-26
2.91	LIGHTING REQUIREMENTS	2-77
2.92	SPECIAL DATA	2-78
2.92.1	Directional Signaling Devices	2-78
2.92.2	Reflectors	2-78
2.93	TRAILER LIGHTING CABLES	2-78
2.94	SPOT LIGHTS	2-78
2.95	MATERIEL MANAGEMENT	2-78

TABLE OF CONTENTS - CONTINUED

Chapter		Page
2.96	WARNING OR INDICATING LIGHTS	2-78
2.97	SHRINK-WRAPPING MOTOR COACH BUSES	2-79
3	MOTOR VEHICLE AND BASE SUPPORT EQUIPMENT INSPECTION	3-1
3.1	PURPOSE	3-1
3.2	RECOMMENDED CHANGES	3-1
3.3	APPLICABLE PUBLICATIONS	3-1
3.4	GENERAL	3-1
3.5	OPERATOR DAILY/WEEKLY INSPECTION REQUIREMENTS	3-2
3.6	PREVENTATIVE MAINTENANCE AND INSPECTION	3-2
3.6.1	Operator Compartment	3-2
3.6.2	Hydraulic Systems	3-2
3.6.3	Check Coolant System, Heater and Air Conditioning	3-2
3.6.6	Fuel System	3-2
3.6.9	Air Brakes	3-3
3.6.10	Wheels and Tires	3-3
3.6.11	Vehicle Lighting	3-8
3.6.14	Corrosion	3-8
3.6.15	Hydraulic System (Special Purpose Assemblies)	3-8
3.6.16	Drive Line	3-9
3.6.17	Warning Devices And Decals	3-9
3.6.18	Engines	3-9
3.7	FUEL SERVICING EQUIPMENT INSPECTION	3-9
3.8	SPECIAL LUBRICATION INSTRUCTIONS AND PRODUCT SPECIFICATIONS	3-9
3.8.1	Special Instructions	3-9
3.8.7	Technical Data and Product Specification	3-10
3.8.7.3	Product Specifications	3-10
3.9	VEHICLE CONDITION INSPECTION	3-12
3.10	SPECIAL INSPECTION	3-12
3.10.2	Refuelers	3-12
3.10.2.1	Filter/Separator Element Change	3-12
3.10.2.2	Inspection/Testing and Servicing Water Segregators	3-13
3.10.2.3	Quinquennial Testing Cryogenic Fuel Trailer/Tube Bank Trailers	3-13
3.10.2.4	Tank Inspections	3-13
3.10.3	Hydraulic Systems (Special Purpose Assemblies)	3-13
3.10.5	Cranes, Crane Shovels, High Reach Trucks, Line Maintenance Derrick Trucks, Wrecker Booms	3-13
3.10.5.1	Mobile Crane Load Tests	3-13
3.10.5.2	High Reach Trucks	3-14
3.10.7	Natural Gas Cylinder/Tank Inspection	3-14
3.10.8	Emission Systems	3-14
3.11	TECHNICAL INSPECTION AFTO FORM 91, LIMITED TECHNICAL INSPECTION (LTI)-MOTOR VEHICLE	3-15
3.11.2	Transfer (Vehicle Being Transferred to Another Installation)	3-15
3.12	ACCEPTANCE INSPECTION	3-15
3.13	SEMI-TRAILER INSPECTIONS	3-15
3.13.2	PM&I	3-15
3.14	RAILWAY EQUIPMENT INSPECTIONS	3-23
3.14.1	Daily Inspections	3-23
3.14.2	Quarterly Inspections	3-23
3.14.2.1	Air Hoses	3-23
3.14.2.2	Battery	3-23
3.14.2.3	Drive Belts	3-23
3.14.2.4	Engines	3-23
3.14.2.5	Electrical Brushes	3-23
3.14.2.6	Air Gauges	3-23
3.14.2.7	Safety Appliances (Ladders, Handholds, Steps, etc.)	3-23
3.14.2.8	Air Brake System	3-23
3.14.2.9	Head, Beacon, Ground, Cab, Step, and Marker Lights	3-23
3.14.3	Annual Inspection	3-23
3.14.3.2	Center Plates and Bearings	3-23
3.14.3.3	Side Bearings	3-23
3.14.3.5	Fuel Oil Tank	3-23
3.14.3.6	Air Brake Filters	3-23
3.14.3.7	Axle Bearings - Plain Journal	3-23
3.14.3.8	Axle Bearings - Roller	3-24
3.14.3.9	Truck Frames, Springs, and Equalizers	3-24
3.14.3.10	Gears	3-24
3.14.3.11	Air Brake System Control Valves	3-24
3.14.3.12	Air Compressor	3-24
3.14.3.13	Couplers	3-24
3.14.3.14	Traction Motor Nose Suspension	3-24
3.14.3.15	Traction Motor Support Bearing Lubricators	3-24
3.14.3.16	Traction Motors and Traction Generators	3-24
4	TIRES	4-1

TABLE OF CONTENTS - CONTINUED

Chapter		Page
4.1	SAFETY SUMMARY	4-1
4.2	SAFETY PRECAUTIONS	4-1
4.2.1	Resuscitation	4-1
4.2.2	Warnings	4-1
4.2.2.1	Buffing Operations	4-1
4.2.2.2	Compressed Air	4-1
4.2.2.3	Vulcanizing Cement	4-1
4.2.2.4	Sharp Or Pointed Tools	4-1
4.2.2.5	Tire Mounting	4-1
4.2.2.6	Injury Prevention	4-1
4.2.2.7	Air Pressure (Tire)	4-1
4.3	GENERAL	4-1
4.4	PURPOSE	4-1
4.5	SCOPE	4-1
4.6	SELECTION OF TIRES	4-1
4.7	TIRE CONSTRUCTION MATERIAL	4-2
4.7.1	Rayon Fiber	4-2
4.7.2	Polyester Fiber	4-2
4.7.3	Nylon Fiber	4-2
4.7.4	Fiberglass	4-2
4.7.5	Steel	4-2
4.8	LOAD RANGE	4-2
4.9	TIRE CONSTRUCTION	4-2
4.9.1	Conventional Bias Ply	4-2
4.9.2	Bias Belted	4-2
4.9.3	Radial	4-2
4.9.4	Special Use Tires	4-2
4.10	HANDLING CHARACTERISTICS	4-2
4.11	TIRE SIZE RATING	4-3
4.11.1	Bias	4-3
4.11.2	Metric	4-3
4.12	TIRE MARKINGS	4-3
4.12.1	General	4-3
4.12.2	Tire Branding	4-3
4.13	TIRE ROTATION	4-3
4.14	TIRE BALANCE	4-8
4.15	WHEEL NUT TORQUE	4-8
4.16	SAFETY ECONOMY AND SERVICE	4-8
4.17	SELECTION OF PNEUMATIC TIRES	4-8
4.17.1	Steel Belted Radial Tires	4-8
4.17.2	Non-Radial Tires	4-8
4.18	TIRE REPLACEMENT	4-8
4.19	BREAK-IN	4-9
4.20	TIRE MANAGEMENT	4-9
4.20.5	Valve Positioning and Capping	4-9
4.21	INSPECTION AND SERVICING	4-9
4.22	IN-USE INSPECTION	4-10
4.22.1	Operator Inspection	4-10
4.22.2	Maintenance Inspection	4-11
4.22.3	Tire Shop Inspection	4-12
4.22.4	Base Storage Inspection	4-12
4.23	RETREADING TIRES	4-12
4.23.1	Technical Criteria	4-12
4.23.2	Economic Factors	4-12
4.23.3	Restrictions on the Use of Retreaded Tires	4-13
4.23.4	Procedures for Obtaining Retread Services	4-13
4.24	REGROOVING TIRES	4-13
4.24.1	Technical Criteria	4-13
4.24.2	Restriction on the Use of Regrooved Tires	4-13
4.25	SERVICING RADIAL TIRES	4-14
4.25.1	Mounting	4-14
4.25.2	Lubrication	4-14
4.25.3	Balancing	4-14
4.25.4	Inflation	4-14
4.26	REPAIR PROCEDURES FOR TIRES	4-15
4.26.1	Punctures	4-15
4.26.2	Evaluation and Preparation	4-15
4.26.2.1	Inspection	4-15
4.26.2.2	Probing	4-15
4.26.2.3	Internal Examination	4-16
4.26.2.4	Cleaning	4-16
4.26.2.5	Buffing	4-16
4.26.3	Repair Procedures	4-16
4.26.3.1	Chemical Vulcanizing Repairs	4-16
4.26.3.2	Hot Vulcanizing Repairs	4-16
4.26.3.3	Head-Type Plug Repairs	4-16
4.26.3.4	Finished Repair	4-16
4.27	MOUNTING AND DEMOUNTING TUBELESS TIRES	4-17
4.27.1	Demounting	4-17
4.28	TUBE-TYPE TIRES	4-17
4.29	INNER TUBES	4-17
4.30	TIRE FLAPS	4-17
4.31	RIMS	4-19
4.32	PREPARATION	4-21
4.33	DETACHABLE RIMS	4-21
4.34	DROP-CENTER RIMS	4-21
4.35	SERVICING MULTI-PIECE RIM WHEELS	4-23
4.35.1	Scope	4-23
4.35.2	Definitions	4-23
4.35.3	Employee Training	4-23
4.35.4	Tire Servicing Equipment	4-24
4.35.6	Wheel Component Acceptability	4-24
4.35.7	Safe Operating Procedure	4-25
4.35.8	Ordering Information	4-25
4.36	USE OF STUDS IN TIRES	4-30
4.37	TIRE INFLATION	4-30
4.37.1	Regulator	4-31
4.37.2	Pressure Gauges	4-31

TABLE OF CONTENTS - CONTINUED

Chapter		Page
4.37.2.1	Test Apparatus	4-31
4.38	VEHICLES EQUIPPED WITH DISC BRAKES	4-31
4.39	STORAGE OF TIRES	4-31
4.40	USE OF FOREIGN OBJECT DAMAGE (FOD) TIRES	4-31
4.40.1	Necessity	4-31
4.40.2	Acquisition	4-31
4.41	SOLID AND SEMI-PNEUMATIC TIRES	4-31
4.42	TYPE OF TIRES	4-31
4.42.1	Standard Solid Rubber Tires	4-31
4.42.2	Cushion Rubber Tires	4-31
4.43	TYPE OF MOUNTINGS	4-31
4.43.1	Press On	4-31
4.43.2	Bolt On	4-31
4.43.3	Integral Type	4-31
4.43.4	Solid Lug Base Type	4-32
4.43.5	Semi-Pneumatic Lug Base Type	4-32
4.44	TREAD PATTERNS	4-32
4.44.1	Smooth Tread	4-32
4.44.2	Grooved Tread	4-32
4.44.3	Diamond Tread	4-32
4.44.4	Rib Tread	4-32
4.45	PREVENTIVE MAINTENANCE	4-32
4.46	INSPECTION	4-32
4.47	GENERAL	4-32
4.48	CRITERIA FOR REMOVAL OF TIRES	4-33
4.49	TIRES CONSIDERED UNSERVICEABLE ON EQUIPMENT BEING PROCESSED FOR DISPOSAL	4-33
4.50	CONTROL OF TIRES	4-33
4.51	SUPPLY POINT	4-33
4.52	RESPONSIBILITIES	4-33
4.53	TURN-IN PROCEDURES FOR UNSERVICEABLE TIRES	4-34
4.54	PROCEDURES FOR REPAIRABLE/RETREADABLE TIRES	4-34
4.55	SEASONAL TIRE STOCKS	4-34
4.56	STORAGE OF TIRES	4-34
4.57	TIRE COSTING	4-34
4.58	TIRE WARRANTIES	4-34
4.59	INVENTORY CONTROL	4-34
4.60	THE TIRE AND RIM ASSOCIATION YEARBOOK	4-35
4.61	CONVERSION TABLES	4-35
5	REPAIR ALLOWANCES AND REPLACEMENT CODES	5-1
5.1	PURPOSE	5-1
5.2	GENERAL	5-1
5.3	SCOPE	5-1
5.4	RESPONSIBILITIES	5-1
5.5	REMS/OLVIMS INTERFACE	5-1
5.6	EXCEPTIONS	5-1
5.7	CHANGES	5-2
5.8	MAJOR COMMAND SUPPLEMENTS	5-2
5.9	MAXIMUM ONE-TIME REPAIR ALLOWANCE	5-2
5.10	AGE	5-2
5.11	STANDARD PRICE	5-2
5.12	REPAIR ESTIMATE	5-2
5.13	DIRECT LABOR	5-2
5.14	DIRECT MATERIAL	5-2
5.15	INDIRECT EXPENSES	5-3
5.16	OTHER CHARGES	5-3
5.17	HOURLY LABOR RATE	5-3
5.18	EXCLUSIONS	5-3
5.19	DEPOT LEVEL REPAIR	5-3
5.20	ACCIDENT REPAIR ESTIMATES	5-3
5.21	REPAIR ESTIMATES FOR CONTRACTOR MAINTAINED VEHICLES	5-4
5.22	AUTHORIZATION FOR REPAIR	5-4
5.23	REPAIR AUTHORITY FOR MINIMUM ESSENTIAL REPAIRS	5-4
5.24	REPAIR AUTHORITY FOR MAJOR REPAIRS	5-5
5.25	SUBMISSION OF REPAIR REQUESTS FOR MAJOR REPAIR APPROVAL	5-5
5.26	CRITERIA FOR APPROVAL OF MAJOR REPAIRS	5-6
5.27	DISPOSITION OF VEHICLES	5-6
5.28	REPLACEMENT CODES	5-6
5.29	CODE ASSIGNMENT	5-7
5.30	EXPLANATION OF CODES	5-7
5.30.1	A - Age, Miles/Kilometers/Hours, and One-Time Repair	5-7
5.30.2	B - Age and One-Time Repair	5-7
5.30.3	C - Miles/Kilometers/Hours and One-Time Repair	5-7
5.30.4	D - One Time Repair	5-7
5.30.5	F - Obsolete	5-7
5.30.6	G - Age and Miles/Kilometers/Hours	5-7
5.30.7	H - Age	5-7
5.30.8	J - Miles/Kilometers/Hours	5-7

TABLE OF CONTENTS - CONTINUED

Chapter		Page
5.30.9	K - Age and Miles/Kilometers/Hours Within One Year	5-7
5.30.10	L - Age Within One Year	5-7
5.30.11	M - Miles/Kilometers/Hours Within One Year	5-7
5.30.12	N - Age and Miles/Kilometers/Hours Within Two Years	5-7
5.30.13	P - Age Within Two Years	5-7
5.30.14	Q - Miles/Kilometers/Hours Within Two Years	5-7
5.30.15	R - Mid-cycle	5-7
5.30.16	S - Depot Repaired Vehicles	5-7
5.30.17	T - Other	5-7
5.30.18	U - Warranty (New/Remanufactured Vehicles)	5-7
5.31	SPECIAL INSTRUCTIONS	5-7
6	CORROSION PREVENTION AND CONTROL FOR AIR FORCE VEHICLES	6-1
6.1	GENERAL	6-1
6.2	SCOPE	6-1
6.3	REFERENCE PUBLICATIONS	6-1
6.4	DEFINITIONS	6-1
6.4.1	Corrosion	6-1
6.4.2	Rust	6-1
6.4.3	Rustproofing	6-1
6.4.4	Tropical Corrosion Control	6-1
6.4.5	Factory Corrosion Control	6-1
6.4.6	Design Corrosion Control	6-1
6.4.7	Initial Corrosion Control	6-1
6.4.8	Follow-On Corrosion Control	6-1
6.4.9	Undercoating	6-1
6.4.10	Vehicle	6-2
6.5	AIR FORCE POLICY	6-2
6.6	RESPONSIBILITIES	6-2
6.7	CORROSION CONTROL LEVELS	6-2
6.7.1	Type A	6-2
6.7.2	Type B	6-2
6.7.3	Type C	6-2
6.7.4	Type D	6-2
6.8	INITIAL CORROSION CONTROL	6-2
6.9	FOLLOW-ON-CORROSION CONTROL	6-3
6.9.1	Responsibility	6-3
6.10	EQUIPMENT AND MATERIALS REQUIRED	6-3
6.11	PREPARATION FOR TREATMENT	6-9
6.11.2	Inspection	6-9
6.11.3	Cleaning	6-9
6.12	RUSTPROOFING APPLICATION	6-10
6.13	FOLLOW-ON APPLICATION	6-10
6.14	TABLES OF APPLICATION	6-11
6.15	VEHICLE CLEANING AND CORROSION PROTECTION	6-36
6.15.4.1	Oily Soils	6-36
6.15.4.2	Semi-Solid Soils	6-37
6.15.4.3	Soils Containing Solids	6-37
6.15.5	Types of Cleaners	6-37
6.15.5.1	Alkaline Cleaners	6-37
6.15.5.2	Solvent Cleaners	6-37
6.15.5.3	Solvent Emulsion Cleaners	6-37
6.15.6	Use of Cleaners	6-37
6.15.7	Solvent Cleaning and the Use of Salt-Water Washdown Additives	6-38
6.15.7.3	Saltwater Washdown Additives	6-38
6.15.8	General Cleaning and Material Process Concerns	6-38
6.15.8.5	Removal of Fungus from Electrical Connectors	6-39
6.15.8.6	Contact Points	6-39
6.15.8.7	Electronic Components	6-39
6.15.9	Corrosion Preventive Compounds (CPC) Types and Applications	6-39
6.15.10	Sealers and Sealant Usage	6-41
6.16	CORROSION THEORY, CAUSE AND EFFECTS	6-41
6.16.1	Definitions of Corrosion	6-41
6.16.2	Corrosion Related Chemical Definitions	6-42
6.16.2.1	Atom	6-42
6.16.2.2	Electron	6-42
6.16.2.3	Ions	6-42
6.16.2.4	Electrolyte	6-42
6.16.3	Theory of Corrosion	6-42
6.16.4	Development of Corrosion	6-42
6.16.5	Metals Affected by Corrosion	6-43
6.16.6	Types of Corrosion	6-43
6.17	FACTORS INFLUENCING CORROSION	6-53
6.17.1	Moisture	6-53
6.17.2	Condensed Moisture	6-54
6.17.3	Open Cell Foam	6-54
6.17.4	Salt Atmospheres	6-54
6.17.5	Industrial Pollutants	6-54
6.17.6	Sand, Dust, and Volcanic Ash	6-54
6.17.7	Climate	6-55
6.17.8	Manufacturing	6-55
6.17.9	Microorganisms	6-55
6.17.10	Mechanical Stress	6-55
6.17.11	Welded Areas	6-56

TABLE OF CONTENTS - CONTINUED

Chapter		Page
6.17.12	Time	6-56
6.17.13	Preventive Maintenance (PM)	6-56
7	VEHICLE DEFICIENCIES AND WARRANTIES	7-1
7.1	PURPOSE	7-1
7.2	SCOPE	7-1
7.3	CHAPTER ORGANIZATION	7-1
7.4	INTRODUCTION	7-1
7.5	DEFICIENCY REPORTING SCOPE	7-1
7.6	DEFINITIONS	7-1
7.6.1	Deficiency Report (DR)	7-1
7.6.2	Originator	7-1
7.6.3	Originating Point	7-1
7.6.4	Screening Point	7-1
7.6.5	AF Action Point	7-1
7.7	DEFICIENCY TYPES	7-2
7.7.1	Design Deficiency	7-2
7.7.2	Maintenance Deficiency	7-2
7.7.3	Materiel Deficiency	7-2
7.7.4	Quality Deficiency	7-2
7.8	REPORT CATEGORIES	7-2
7.8.1	Materiel Deficiency Report (MDR)	7-2
7.8.2	Vehicle Unsatisfactory Report (VUR)	7-2
7.8.3	Action Warranty Report (AWR)	7-2
7.8.4	Info Only: Warranty Satisfactory Report (IWR)	7-2
7.9	GENERAL	7-2
7.9.1	Certifying Official	7-2
7.9.2	Materiel Improvement Project (MIP)	7-2
7.9.3	MDR Exhibit	7-2
7.9.4	MDR Exhibit Holding Activity	7-2
7.9.5	Warranty Items	7-2
7.10	GENERAL PROCEDURES	7-2
7.11	METHOD OF REPORTING	7-2
7.12	CONTROL AND COMMUNICATION	7-2
7.13	PURPOSE	7-2
7.14	GENERAL WARRANTIES	7-2
7.15	RESPONSIBILITIES	7-2
7.16	COMMUNICATION	7-3
7.17	WARRANTY COVERAGE	7-3
7.17.1	Basic Warranty Coverage	7-3
7.17.2	Extended Coverage	7-3
7.17.3	Corrosion Coverage	7-3
7.17.4	Emission Control System	7-3
7.17.5	Domestic Use	7-3
7.17.6	Foreign Use	7-5
7.17.6.1	Delayed Delivery Warranties	7-5
7.17.7	Warranty Extensions	7-5
7.17.9	Warranty for Trailers	7-6
7.18	WARRANTY EXCEPTIONS	7-6
7.18.1	Tires and Batteries	7-6
7.18.1.1	Original Tires/Batteries Provided with New Vehicles	7-6
7.18.1.3	Locally Procured Tires, Batteries and Retreading Service	7-6
7.18.2	Maintenance not Covered by Warranty	7-6
7.18.3	Nonwarranty Period Adjustments	7-7
7.18.4	Tactical Vehicle Warranty	7-7
7.19	POST DELIVERY SERVICES AND INSPECTIONS	7-10
7.20	DELIVERY CONDITION	7-10
7.21	SPECIAL WARRANTY PROCEDURES WITHIN THE 50 STATES OF THE UNITED STATES AND THE DISTRICT OF COLUMBIA	7-11
7.21.1	Air Force Warranty Corrections with Reimbursement	7-11
7.21.2	Independent (Non-Dealer) Garage Warranty Corrections	7-11
7.21.3	Conditional Warranty Corrections	7-11
7.21.4	Air Force Repair of Warranty Covered Vehicles without Reimbursement	7-11
7.21.5	Air Force Emergency Repair of Warranty Covered Vehicles	7-12
7.22	WARRANTY PROCEDURES OUTSIDE THE LIMITS OF THE 50 UNITED STATES AND THE DISTRICT OF COLUMBIA	7-12
7.22.2	Return of Defective Parts	7-12
7.23	WARRANTY PROBLEMS	7-14
7.24	PARTS EXHIBITS	7-14
7.25	WARRANTY REPORTING	7-14
7.25.2	Warranty Report Processing	7-14
7.26	GENERAL	7-14
7.27	PROCESSING DRS	7-15
7.27.1	General	7-15
7.27.2	Method of Reporting	7-15
7.28	PROCESSING MDRS	7-15
7.29	PROCESSING UNSATISFACTORY REPORTS	7-15
7.30	VIWG	7-17
7.31	REPORTING	7-17
7.32	VIWG/VMAG MEMBERS	7-17
8	STORAGE AND SHIPMENT	8-1
8.1	PURPOSE	8-1

TABLE OF CONTENTS - CONTINUED

Chapter		Page
8.2	SCOPE	8-1
8.3	RESPONSIBILITY FOR PROCESSING AND DEPROCESSING	8-1
8.3.3	Intra-Organizational Responsibility	8-1
8.3.4	Deprocessing	8-1
8.4	WATER EXPORT OVERSEAS	8-1
8.5	LEVELS OF PRESERVATION	8-2
8.5.5.1	Active Storage	8-2
8.5.5.2	Inactive Storage	8-2
8.6	PROCESSING PROCEDURES	8-2
8.7	EXPLANATION OF COLUMNS	8-2
8.8	PRELIMINARY ACTIONS	8-51
8.8.1	Administrative	8-51
8.8.2	Scope	8-51
8.8.3	Responsibility	8-52
8.9	PRE-STORAGE PREPARATIONS	8-52
8.9.1	Cleaning	8-52
8.9.2	Painting	8-52
8.9.3	General Processing	8-52
8.9.3.1	Exposed Machined Surfaces	8-52
8.9.3.2	Unpainted Non-critical Exterior Metal Surfaces	8-52
8.9.4	Disassembly	8-52
8.9.5	Matchmarking	8-52
8.9.6	Historical Records	8-52
8.9.7	Marking	8-52
8.10	PRE-STORAGE ACTIONS	8-52
8.11	MAINTENANCE	8-53
8.11.1	During Storage	8-53
8.11.2	Outshipment	8-53
8.12	STORAGE (STATUS OF PRESERVATION AND PROCESSING) INSPECTIONS FOR VEHICLES PRESERVED FOR LEVEL A	8-53
8.12.1	Visual Inspection	8-53
8.12.2	Functional Inspection	8-53
8.12.3	Complete Storage Inspection	8-54
8.12.4	Storage Site	8-54
8.12.5	Outside Storage	8-54
8.12.6	Inside Storage	8-54
8.12.7	Spacing and Arrangement	8-54
8.12.8	Nesting or Stacking for Storage	8-54
8.12.9	Blocking and Fire Precautions	8-54
8.12.10	Security and Fire Precautions	8-54
8.12.11	Insect and Rodent Control	8-54
8.13	LOADING	8-54
8.13.1	Rail Shipment	8-54
8.13.2	Highway Shipment	8-54
8.14	GENERAL DEPROCESSING	8-55
8.14.1	Introduction	8-55
8.14.2	Scope	8-55
8.15	STORAGE AREA	8-55
8.16	USE OF STORED VEHICLES	8-55
8.17	OPERATING PERSONNEL	8-55
8.18	TCTOS	8-55
8.19	REPAIR	8-55
8.20	INSPECTION	8-55
8.20.1	Receiving	8-55
8.20.2	During Storage	8-56
8.20.3	Shipping	8-56
8.20.4	Other Inspections	8-56
8.21	DETAILED PROCEDURES	8-56
8.21.1	Preparation for Storage	8-56
8.21.1.1	Cleaning	8-56
8.21.1.2	Depreservation	8-56
8.21.1.6	Batteries	8-56
8.21.1.7	Fuel Tanks	8-57
8.21.1.8	Special Precautions	8-57
8.21.2	Exercise Intervals	8-57
8.21.3	Exceptions	8-57
8.21.3.4	Exercise Period	8-57
8.21.3.5	Requirements Prior to Exercise	8-57
8.21.3.6	Conduct of Exercise	8-58
8.21.3.7	Check During Exercise	8-58
8.21.3.8	Requirements Prior to Re-Storage	8-58
8.21.3.9	Records	8-58
8.22	GENERAL	8-58
8.22.1	Purpose and Scope	8-58
8.22.2	Instructions	8-58
8.22.2.1	Commercial Airlift	8-58
8.22.2.2	Military Airlift	8-58
8.22.3	Specific Instructions	8-59
8.22.3.1	Fuel Tanks	8-59
8.22.3.2	Batteries	8-59
8.22.3.3	Battery Acid (Electrolyte)	8-59
8.22.3.4	Air Shipment of Fuel Servicing Trucks, Trailers, and Semitrailers (Except Rocket Fuel and Missile Propellant and Oxidizer Transporting Equipment)	8-59
8.22.3.5	Main Fuel Tank	8-59
8.22.3.6	Chemical Neutralization	8-60
8.22.3.7	Forced Air Purge	8-60
8.22.4	Oil Purge	8-61
8.22.5	Steam Purge	8-62
8.22.6	Segregators	8-63
8.23	FOLLOW-ON PROCEDURES	8-63
8.24	PREPARATION FOR AIRLIFT OF FUEL SERVICING VEHICLES UNDER FIELD CONDITIONS (APPLICABLE TO ACC, AFSOC, AND ANG UNITS ONLY)	8-63
8.24.1	Safety Precautions	8-63

TABLE OF CONTENTS - CONTINUED

Chapter		Page
8.24.13	Oil-Fog Purging	8-64
8.24.14	Pump Purging with Automotive Diesel Fuel	8-64
8.24.17	Equipment Required	8-64
9	INTERMEDIATE AND DEPOT REPAIR OF VEHICLES AND COMPONENTS	9-1
9.1	PURPOSE	9-1
9.2	SCOPE	9-1
9.3	RECOMMENDED CHANGES	9-1
9.4	DEPOT MAINTENANCE	9-1
9.5	MAINTENANCE CRITERIA AND PRODUCTION CYCLES	9-1
9.6	ESTIMATED COMPLETION DATES	9-1
9.7	AUTOMATED AIR FORCE TECHNICAL ORDER (AFTO) FORM 91-1 REQUIREMENT	9-1
9.8	VEHICLE INSPECTION/ACCEPTANCE	9-1
9.9	WARRANTY DISCREPANCY REPORTING	9-2
9.10	580 CBSS/GBL	9-2
9.11	VEHICLES AND COMPONENTS NOT ELIGIBLE FOR DEPOT MAINTENANCE	9-2
9.12	VEHICLE COMPONENTS ELIGIBLE FOR DEPOT MAINTENANCE	9-2
9.13	AUTHORIZED DEPOT VEHICLES	9-2
9.14	MAINTENANCE ASSISTANCE	9-3
9.15	580 CBSS/GBL	9-3
9.16	VEHICLE REQUIREMENTS	9-3
9.17	ADDITIVE REQUIREMENTS	9-3
9.18	REQUEST FOR DEPOT OVERHAUL	9-3
9.19	VEHICLE REPAIR SCHEDULING	9-4
9.20	ATTACHMENTS	9-4
9.21	APPROVAL	9-4
9.22	CONTRACTORS	9-4
APPENDIX A	TUNNER (60K) AIRCRAFT CARGO LOADER	A-1
A.1	GENERAL INFORMATION	A-1

LIST OF ILLUSTRATIONS

Number	Title	Page
2-1	License Plate	2-27
2-2	Modular Ambulance	2-28
2-3	Van Ambulance	2-29
2-4	Truck Ambulance	2-30
2-5	Law Enforcement Sedan	2-31
2-6	Warehouse Tug	2-32
2-7	Highlighting Marking, Aircraft Cargo Handling Truck	2-33
2-8	Harness Required Area	2-33
2-9	Highlighted Markings, Age Towing Tractor	2-34
2-10	Fuel Trailer - Two Wheel	2-35
2-11	Fuel or Oil Servicing Trucks	2-36
2-12	Refueling Truck	2-38
2-13	Waste Fuel Vehicle	2-41
2-14	Rescue Fire Truck	2-41
2-15	P-18 Water Tanker Fire Truck	2-42
2-16	P-19 Fire Truck	2-43
2-17	P-20 Ramp Fire Truck	2-46
2-18	P-23 Ramp Fire Truck	2-46
2-19	P-24 Ramp Fire Truck	2-46
2-20	Manual Release Pintle Hooks	2-47
2-21	Hydrant Fueling Truck	2-48
2-22	Strike Hazard Marking	2-54
2-23	Highlighting Marking, Refueling Vehicles	2-55
2-24	Security Forces SUV	2-56
2-25	Shrink-Wrapped Motor Coach Bus	2-58
2-26	N204 Semi-Trailer	2-58
2-27	Liquid Oxygen Unit	2-59
2-28	Liquid Nitrogen Trailers and Trucks	2-60
2-29	Highlighted Trailers and Tractors	2-61
2-30	Forklift Truck	2-63
3-1	Semi-Trailer Inspection Form and Checklist Procedures	3-17
3-2	Typical Lowbed Trailer Structure (Full Width Gooseneck Shown)	3-20
3-3	Typical Beam Construction	3-21
3-4	King Pin Mounting Area	3-22
4-1	Load Ranges	4-4
4-2	Tire Construction	4-4
4-3	Handling Characteristics	4-4
4-4	Cornering Characteristics	4-5
4-5	New Tire Dimensions	4-5
4-6	Tire Markings	4-6
4-7	Tire Rotation	4-6
4-8	Rotation Patterns for Tires	4-7
4-9	Static Out-of-Balance	4-7
4-10	Dynamic Out-of-Balance	4-8
4-11	Stages of Tire Inflation	4-11
4-12	An Example of Tire Abuse	4-12
4-13	Inspecting a Tire for Casing Damage	4-14
4-14	Using the Extension Hose to Inflate a Tire	4-15
4-15	Effects of Rim Design on Proper Mounting Position	4-18
4-16	Points of Inspection for Tires and Tubes	4-19
4-17	Tubeless Tire Construction	4-19
4-18	Tire Mounting and Demounting Operation	4-20
4-19	Manually Demounting Tire-Drop Center Rim	4-22
4-20	Manually Mounting Tire-Drop Center Rim	4-26
4-21	Trajectory Warning	4-27
4-22	Tire Inflator Cage with Proper Inflation Equipment Shown	4-28
4-23	Pressure Gauge Test Record	4-29
4-24	Pressure Gauge Test Assembly	4-30
4-25	Tire Inventory Control Record	4-36
5-1	One-Time Repair Computation Worksheet	5-6
6-1	Commercial General Purpose Vehicles (Areas of Application)	6-12
6-2	Special Purpose Vehicles (Full Tracked Tractors)	6-24
6-3	Diagram of a Simplified Corrosion Cell	6-42
6-4	Example of Raised Corrosion Product	6-42
6-5	Aluminum Fuel Tank Exhibiting Uniform Etch	6-43
6-6	Galvanic Corrosion Steel Hinge Bolted to an Aluminum Door	6-43
6-7	Pitting Corrosion	6-44
6-8	Intergranular Corrosion Cell	6-44
6-9	Exfoliation Corrosion	6-44
6-10	Concentration/Crevice Corrosion	6-44
6-11	Filiform Corrosion	6-46
6-12	Diagram of Fretting Corrosion	6-46
6-13	Corrosion Accelerated by Condensed Moisture	6-54
6-14	Open Cell Foam and Resulting Corrosion	6-54
6-15	Corrosion Resulting from Long-Term Exposure to Sand	6-55
6-16	View of Microbial Induced Corrosion	6-55
6-17	Corrosion on Weldments	6-56
7-1	Deficiency Report	7-4
7-2	Delayed Delivery Form - Ford Motor Company	7-8
7-3	Delayed Delivery Form - General Motors Company	7-9

LIST OF ILLUSTRATIONS - CONTINUED

Number	Title	Page
7-4	Delayed Delivery Form - Chrysler Corporation	7-10
7-5	Military Shipment Label (sample)	7-13
7-6	DD Form 2332, Materiel Deficiency Exhibit Tag	7-16
7-7	VIWG Action Items	7-18
9-1	Maintenance Criteria and Production Cycles	9-1

LIST OF TABLES

Number	Title	Page
2-1	Required Markings for Common Substances	2-26
2-2	Materiel Management Information	2-64
2-3	Marking Information	2-67
2-4	Decal Information	2-76
2-5	Modular Ambulance Decal Information	2-77
3-1	Vehicle and Equipment Inspection and Service Intervals	3-4
3-2	Special Preventative Inspection/Tests	3-6
3-3	Preventative Maintenance Interval Conversion Table-Miles to Kilometers	3-8
3-4	Lubricant/Oil Product Specifications	3-10
3-5	Definition of Terms	3-16
3-6	Semi-Trailer Structural Inspection Checklist	3-18
4-1	Tolerance In Matching Dual Tires	4-10
4-2	Measuring Procedure for New Tires	4-10
4-3	Tire Size Conversion Chart	4-37
4-4	Tire Size Conversion Chart (European Metric Tire Size)	4-38
4-5	Tire Size Conversion Charts	4-38
6-1	Required Equipment	6-3
6-2	Required Material	6-4
6-3	Corrosion Severity Zones and Minimum Wash Interval	6-46
6-4	Galvanic Series of Metals and Alloys	6-53
7-1	How to Complete a DD Form 2332	7-15
7-2	VIWG/VMAG Members	7-17
8-1	Materials Required for Processing	8-3
8-2	Processing Procedures	8-6
9-1	Depot Eligible Vehicles	9-3
9-2	Command Abbreviations	9-4
A-1	Tunner (60 K) Aircraft Cargo Loader	A-2

FOREWORD

1 PURPOSE.

The purpose of this manual is to provide vehicle fleet managers (VFM), supervisors (VMS), and technicians a single publication encompassing technical and managerial guidance related to the maintenance and upkeep of their respective vehicle and vehicular equipment fleets.

2 SCOPE.

This technical manual specifies procedures, materials and guidance for the Vehicle Fleet Manager (VFM). It addresses the minimum vehicle serviceability standards for appropriate painting/marking requirements, vehicle inspection requirements, and vehicle repair allowances. Further, it prescribes procedures for corrosion control, storage and shipment, warranties and depot overhaul and repair and applies to all Active Duty, AF Reserve, Air National Guard vehicle management units. All guidance listed is mandatory, unless exceptions are authorized elsewhere with this manual.

3 USAGE.

Use this manual in conjunction with and in support of the appropriate Army Technical Manuals (TMs), Technical Bulletins (TBs), Air Force Instructions, Air Force Manuals, and Air Force Technical Orders (TOs). Where this manual conflicts with Army and Air Force vehicle specific technical manuals/technical orders, the vehicle specific guidance shall take precedence over this manual. However, vehicle management activities shall contact their MAJCOM counterparts for immediate resolution of the conflict.

4 RESPONSIBILITY FOR CHANGES TO THIS MANUAL.

Recommended changes, corrections, or deletions. All activities using this manual are invited to submit recommended modifications, additions, or deletions. All suggestions are collected by each MAJCOM vehicle staff and submitted during the next Block Cycle Update (BCU). The BCU cutoff date for this publication is May 30 each year. Each MAJCOM will submit their consolidated changes to AFELM VEMSO who will consolidate and coordinate changes amongst the other MAJCOMs. Final review and coordination will be accomplished at the annual Vehicle Management Advisory Group (VMAG), normally held in June each year. Any urgent or immediate changes to this manual are processed as defined in TO 00-5-1.

5 SUPPLEMENTS.

MAJCOM supplements to this manual must be coordinated with and approved by HQ USAF/A4RE and 580 CBSS/GBL, prior to publication and dissemination.

SAFETY SUMMARY

1 GENERAL.

The following are general safety precautions, not related to any specific procedure and therefore do not appear elsewhere in this publication. These are recommended precautions and instructions that personnel must understand and apply during many phases of operation and maintenance to ensure personal safety and health.

2 PROTECTIVE CLOTHING.

Wear protective clothing (gloves, apron, etc.) approved for the materials and tools being used.

3 SAFETY EQUIPMENT.

When cleaners and primers are being applied, approved equipment shall be used. Make sure fire fighting equipment is readily available and in working order. Maintain minimum quantities required to accomplish tasks. Solvents will be contained in approved containers.

4 ELECTRICAL CIRCUITS.

Operating personnel must think safety at all times. Do not replace components or make adjustments inside of equipment with the electrical power supply turned on. To avoid injuries, always remove power from, discharge and ground a circuit before touching it. If a test connection to energized equipment is required, make the test equipment ground connection before probing the voltage or signal to be tested. Do not attempt internal service or adjustment of equipment unless another person capable of rendering aid and resuscitation is present.

5 WARNINGS, CAUTIONS AND NOTES.

WARNING

Calls attention to an essential operating or maintenance procedure, practice, condition, statement, etc., which if not strictly observed, could result in injury to or death of personnel or long term health hazards.

CAUTION

Calls attention to an essential operating or maintenance procedure, practice, condition, statement, etc., which if not strictly observed, could result in damage or destruction of equipment or loss of mission effectiveness.

NOTE

An essential or unusual procedure, condition or statement which will be highlighted.

WARNINGs and CAUTION statements have been strategically placed throughout this text prior to operating or maintenance procedures, practices, or conditions considered essential to the protection of personnel (WARNING) or equipment and property (CAUTION) or when essential to highlight a practice. A WARNING and a CAUTION or NOTE will apply each time the step to which it refers is repeated. Prior to starting any task, the WARNINGS, CAUTIONS, and NOTES for the task will be reviewed and understood.

CHAPTER 1
SERVICEABILITY STANDARDS

1.1 PURPOSE.

The purpose of this chapter is to provide minimum serviceability standards for USAF vehicles that must be met or surpassed before a vehicle can be placed into or accepted from a transit status. These standards are established to ensure safe daily operation, mission needs, and to prevent shifting of workload.

1.2 SCOPE.

The instructions prescribed herein are intended to provide uniform inspections and standards for USAF vehicles in operation or transit. The uniform inspection method for determining the condition of vehicles is the Limited Technical Inspection (LTI), which is performed with the AFTO Form 91, Limited Technical Inspection-Motor Vehicles. References to AFTO Form 91 apply equally to the Automated LTI module in OLVIMS. The standards, which must be met, are defined in this chapter. These standards shall be applied to vehicle components to determine vehicle acceptability. Failure to meet these standards shall be cause for rejecting a vehicle or component. Inspections will be accomplished at completion of repairs and prior to release of vehicle from the maintenance activity for subsequent shipment. Although the majority of vehicles will meet this standard throughout their life, local conditions may require deviations from some of these requirements. Adherence to these requirements is mandatory only when a vehicle is placed into or received from a transit status. Other uses of this technical order are left to the discretion of the VFM.

1.3 DEFINITIONS.

The term “vehicle” will normally be considered to include all self propelled equipment, trailers, semitrailers, and some towed equipment. The term “acceptable” means the vehicle fully meets the requirements of this chapter as revealed during the Limited Technical Inspection.

1.4 GENERAL INSPECTION POLICIES.

All vehicles destined for transfer within the Air Force will be inspected prior to shipment to ensure that they meet or surpass the minimum serviceability standards established in this chapter. The vehicle condition will be established only after all systems and components have been service tested. Qualified vehicle maintenance personnel, when performing these inspections, must stress sufficiency and adequacy and not perfection. For further determination of worn parts, refer to the general inspection guide of this technical order and applicable manufacturer’s specifications where close tolerance factors are present. Activities scheduled to receive vehicles will requisition the applicable technical orders in accordance with TO 00-5-1. When shipping a “one-of-a-kind” vehicle, all TOs will accompany the vehicle.

1.5 LIMITED TECHNICAL INSPECTION.

This inspection is used to determine the condition of a vehicle or piece of equipment. It consists of complete functional testing of the item and all components using a Limited Technical Inspection - Motor Vehicle, AFTO Form 91, and applicable equipment handbooks. The requirement for complete functional testing does not extend to equipment or components on which it is obviously “impractical” to perform such tests. A rock crushing plant is an example of such equipment. A fuel servicing semitrailer/vehicle, on the other hand, would require complete functional testing.

1.5.1 Inspection will be required to determine if a vehicle is acceptable, repairable, or should be processed for disposal.

1.5.1.1 In general, this inspection will reveal the acceptable condition of a vehicle while accomplishing a check for completeness of records, estimate of repair costs, and condition classification. If the vehicle has special tools delivered with the vehicle, the inspection shall include an accounting of those tools.

1.5.1.2 The use of AFTO Form 91 as an inspection form is restricted to qualified vehicle maintenance personnel and is applicable to all vehicles. Inspections shall be accomplished in such detail as necessary to determine condition of equipment and accuracy of entries on the inspection forms.

1.5.1.3 When parts are replaced, they will be replaced with items equal to or better than new original equipment items. MAJCOMs may waive these standards for intra-command shipments when urgent mission requirements exist. On the other hand, both gaining and losing MAJCOMs must agree before standards are waived for inter command shipments.

1.5.2 Disposition Inspections.

1.5.2.1 When it has been determined by the Chief, Vehicle Management Flight/Vehicle Fleet Manager that it is not cost effective to repair a vehicle in accordance with Chapter 5, an AFTO 91 (computer generated version preferred), will be prepared in accordance with command policy.

1.5.2.2 When inspections are performed on economically reparable special purpose, base maintenance vehicle/equipment, 463L/MHE or general purpose vehicles declared excess, a narrative statement will accompany applicable AFTO Form 91. This statement will include sufficient information necessary for determination of:

1.5.2.2.1 The general condition of the vehicle or equipment item.

1.5.2.2.2 The estimated calendar days required to accomplish listed repairs including time required to obtain necessary parts and supplies.

1.5.2.2.3 The capability and/or feasibility of accomplishing required repairs at intermediate maintenance level.

1.5.2.2.4 The most efficient means of accomplishing required repairs to ensure vehicle is being shipped in an acceptable condition.

1.5.2.2.5 The ability of vehicle or equipment to satisfy proposed mission requirement.

1.5.2.2.6 Requirement for IM Depot Level maintenance support in accordance with AFI 23-302 (except for excess general purpose vehicles).

1.5.2.2.7 Whether any vehicle systems or components deviate from original manufacturer configuration (exception: approved TCTOs, service bulletins, or safety recalls published by the manufacturer or WR-ALC).

1.5.3 Receiving/Acceptance Inspections. All new and used vehicles and equipment will be inspected by the Air Force activity which receives them within 60 days of receipt. Equipment processed or prepared for storage or shipment may be de-processed on a sampling basis to determine condition.

1.5.3.1 Records Inspection. Upon receipt of a new or used vehicle or equipment item, VM&A and vehicle management personnel will jointly perform an inspection of the records file to determine completeness of records and vehicle/equipment condition as reflected by the records. VM&A will take custody of the active Vehicle Historical Record and the shipping LTI. If applicable, review work orders, AFTO Form 91 prepared by transferring unit, and other related records to determine maintenance status of the item. Upon completion of the records inspection, VM&A will schedule and initiate work order(s) to accomplish the acceptance inspections outlined below and other maintenance actions necessary to complete the acceptance. For vehicles/equipment received by transfer, the AFTO Form 91 accomplished by the transferring unit will be attached to the work order for reference by vehicle management personnel during the acceptance inspection.

1.5.3.2 Inspection. The acceptance inspection will be accomplished on new and used vehicles/equipment upon receipt and assignment to the LRS Vehicle Management activity for preparation for service. The inspection consists of, as a minimum:

1.5.3.2.1 The visual inspection portion of the scheduled inspection. Lubrication/oil and filter change will be performed if necessary.

1.5.3.2.2 A functionality check of all major components on the vehicle. If the inspection reveals unsatisfactory condition, the VFM may direct a technical inspection (AFTO Form 91) or work order repair estimate to support warranty action (new vehicle) or other follow-up action on used vehicles/equipment received by transfer from another installation. If the AFTO Form 91 is used, it will be attached to the work order and filed according to local approved procedures.

1.5.4 Used Vehicles (Receiving Inspection). Used vehicles will have an LTI in their records from the shipping unit. Incoming vehicle deficiencies disclosed on a receipt inspection for vehicles received from another Air Force activity will be indicated on AFTO Form 91. If it is determined that the vehicle does not meet the standards established herein, the AFTO Form 91 will be forwarded to the losing command through normal command channels for their information and necessary action. The letter of transmittal will identify the activity responsible for the deficiencies and include date the vehicle was received as well as date inspected. An information copy of this letter will be forwarded to 580 CBSS/GBL when the Item Manager has directed vehicle shipment. Transmittal letter will cite specific minimum action required to bring vehicle to a serviceable condition. Upon concurrence by 580 CBSS/GBL that the asset was transferred in an unserviceable condition, the shipping activity will take whatever action necessary (i.e. provide fund cite for parts, contract labor, etc.) to place vehicle in serviceable condition within 30 days from date of 580 CBSS/GBL notification. For all discrepancies noted on AFTO Form 91 which do not necessarily place vehicle in an unserviceable status, it shall be the responsibility of the shipping activity to provide any items considered replaceable or provide funded obligation authority. It shall be the responsibility of the receiving

activity to install items provided and/or repair items not necessary to replace. However, man-hours devoted to installation/repair in excess of normal maintenance which must be contracted shall be funded by the shipping activity.

1.5.4.1 Serial Numbers (Vehicle Identification Number or VIN).

NOTE

Replacement eligible vehicles may only be shipped within CONUS in an "as is" status upon prior agreement between shipping and receiving activities, except when shipping mission essential vehicles.

Vehicle chassis and engine serial number will be checked and recorded on the receiving inspection. Engine serial numbers, if applicable, will be maintained current. Before transfer of vehicles to another organization or disposal, the vehicles will be inspected to assure serial numbers are recorded.

1.5.4.1.1 The manufacturer normally assigns serial numbers to vehicle chassis and/or engines in accordance with standard practices. Chassis serial numbers are stamped on various locations, i.e., frame, cross members, data plates on door post or the firewall. VIN numbers are found in the lower left corner of the windshield on the dashboard of most commercially manufactured vehicles.

1.5.4.1.2 A substitute serial number will be used in instances where research fails to reveal a manufacturer's serial number. The substitute numbers will be recorded on the Vehicle Historical Record.

1.5.4.1.3 Installation procedures for lost identification plates: A locally manufactured data plate will be installed on vehicles that do not have the original manufacturer's data plate. This plate may be manufactured from available materials and the size determined by individual application. Information to be recorded on data plate is as follows:

a. Manufacturer's serial number, e.g., 00513.

b. USAF vehicle number, e.g. 87L03431 (if serial number or VIN is unknown).

1.5.5 New Vehicles (Acceptance Inspection). All new vehicles received from a manufacturer will be inspected by the first Air Force activity which receives it. An AFTO Form 91 will be accomplished. New items found to be unacceptable as the result of manufacturing defects will be processed as outlined in Chapter 7.

1.5.5.1 Serial Numbers (Vehicle Identification Number or VIN). Vehicle chassis and engine serial number will be checked and recorded on the acceptance inspection. Engine serial numbers, if applicable, will be maintained. Before transfer of vehicles to another organization for disposal, the vehicles will be inspected to assure serial numbers are recorded.

1.5.5.2 The manufacturer normally assigns serial numbers to vehicle chassis and/or engines in accordance with standard practices. Chassis serial numbers are stamped on various locations, i.e., frame, cross members, data plates on door post or the firewall. VIN numbers are found in the lower left corner of the windshield on the dashboard of most commercially manufactured vehicles.

1.5.5.3 A serial number will be obtained from the manufacturer if the data plate cannot be found.

1.5.5.4 Installation procedures for lost identification plates: A locally manufactured data plate will be installed on vehicles that do not have the original manufacturer's data plate. This plate may be manufactured from available materials and the size determined by the individual application. Information from the manufacturer shall be recorded on the data plate.

1.5.6 Shipping Inspections.

1.5.6.1 Transfer (Vehicle Being Transferred to Another Installation).

1.5.6.2 Conus Shipment. Prior to shipping vehicles between Air Force activities, a technical inspection will be performed to determine that vehicles are acceptable. Transferred vehicles must be in a condition that will permit use by the receiving activity without additional repairs. Prepare the LTI form in duplicate. A copy will be included in the vehicle records for use by the receiving organization.

NOTE

Every effort should be made to ship only those assets with at least 50 percent of their life expectancy (age, miles/kilometers) remaining as reflected in the Vehicle Management Index File (VMIF) at https://sevpgm.robins.af.mil/vehicle/vmif/section2.asp. However, Item Managers or MAJCOMs may direct shipment of assets with less than 50 percent life expectancy remaining to satisfy mission requirements. For shipment between MAJCOMs, the gaining command must concur with the shipment of any asset in "as-is" condition or with less than 50 percent life expectancy.

1.5.6.3 Overseas Shipment Air Force Installations. Equipment to be shipped overseas, except those vehicles being shipped under the Military Assistance Program (MAP), must be in safe and serviceable condition and have at least 75 percent of their anticipated life remaining. The percentage of remaining service life will be computed using life

expectancy years and/or mileage as reflected in the Vehicle Management Index File (VMIF) at https://sevpgm.robins.af.mil/vehicle/vmif/section2.asp. Equipment requiring repairs, which would exceed the one-time repair allowance, is considered uneconomically reparable and will not be considered for shipment overseas.

NOTE

Only standard, interchangeable, and when authorized by prime depot, substitute items of equipment will be shipped overseas. When authorized, obsolete equipment may be used within the confines of the continental limits of the United States.

1.5.6.4 Overseas Shipment for Contingency and Mobility Support. Vehicles sourced to deploy must be the best available. These vehicles are expected to perform the mission with little to no support for the first 30-60 days. Therefore it is imperative that all vehicle leadership ensures squadron, group and wing commanders endorse deploying the best and newest vehicles. Additionally, history has shown (Desert Storm, Operation Noble Eagle, Operation Iraqi Freedom, etc.) that major deployments of US forces around the globe are more successful if the arriving vehicle support is in a higher than average state of readiness historically dubbed “36-1-191 Plus”. The “36-1-191 Plus” vehicle certification includes, as a minimum:

1.5.6.4.1 Reviewing historical record and work order history data to ensure nothing disqualifies the vehicle from performing as expected.

1.5.6.4.2 There is no indication that the vehicle has “hangar queen” tendencies or trends of repetitive maintenance.

1.5.6.4.3 NMCM nor NMCS experience is inordinate when compared with peer vehicles.

1.5.6.4.4 The vehicle is not immediately scheduled for depot level input.

1.5.6.4.5 There are no outstanding TCTOs that can be accomplished.

1.5.6.4.6 Attending to the physical conditioning of the vehicle by certifying that:

1.5.6.4.7 All new filters are installed (where possible, filters will be long-life, premium quality).

1.5.6.4.8 All power and drive belts are absolutely crack-free and check-free.

1.5.6.4.9 Cooling system is clean with antifreeze mixed to 50 percent antifreeze, 50 percent water.

1.5.6.4.10 Water pump shows no sign of fatigue or leakage (if in doubt, replace it).

1.5.6.4.11 All water hoses are crack free, with no bulging or sponginess.

1.5.6.4.12 Dust-boots are crack-free, properly positioned, and securely fastened.

1.5.6.4.13 Hydraulic cylinder ram-shaft wiping seals wipe the shaft as dry as factory/manufacturer tolerance allows (to include power steering rams).

1.5.6.4.14 Every system or major component for which an on-vehicle fault isolation test or operability assessment is developed (per tech data) was analyzed and load tested and found to be completely within specs (i.e., alternators, batteries, starter motors, fuel injector pumps, etc.). Document results and retain data in permanent vehicle records jacket until vehicle is returned or dropped from VAL.

1.5.6.4.15 A thorough quality control inspection of work will be done during prep for shipment.

1.5.6.4.16 Since the DOD single battlefield fuel is JP8, does the deploying vehicle need any components beefed up prior to deploying (fuel pump)?

1.5.7 Military Assistance Program. Maximum repair allowances do not restrict vehicles shipped under the Military Assistance Program (MAP). This applies to vehicles being shipped from Zone of Interior or from overseas. A copy of the LTI will be included in the vehicle records for use by the receiving organization.

1.5.7.1 In addition to inspection requirements of this technical order, the following standards shall be used in determining eligibility of vehicles for MAP requirements:

1.5.7.2 Vehicle appearance shall be above average and spot painting will be kept to a bare minimum. When spot painting five percent or more of painted surface, the vehicle shall be completely refinished.

1.5.7.3 Vehicle will be complete with all components, assemblies, and parts. All TCTOs will be completed unless waived by receiving MAJCOM liaison.

1.5.7.4 Excessively cracked or missing glass windows, windshields, light lenses etc., will be replaced.

1.5.7.5 Vehicle components, assemblies, and accessories shall be in serviceable condition and in proper adjustment with remaining anticipated life expectancy of 50 percent. EXAMPLE: Brake linings will have 50 percent of original usable thickness remaining.

1.5.7.6 The inspection on vehicles designated for the Military Assistance Program will indicate specifically the condition of equipment in relation to its original life expectancy and appearance.

1.5.8 Depot Repair/Rebuild Request.

1.5.8.1 LTIs may be sent electronically to MAJCOM or WR-ALC. If hard copy forms are used, the LTI will be prepared in triplicate when requested by the MAJCOM to support the annual depot overhaul requirements. Forward LTI to the major command vehicle management function.

1.5.8.2 When instructions have been received to ship a specific vehicle to a depot overhaul facility, a new LTI will be prepared to accompany the vehicle. This LTI will reflect all missing components. Labor and material costs need not be computed on this LTI. Vehicles arriving at depot repair facilities are inspected to ensure accompanying LTI identifies missing components, if any. All vehicles and components are overhauled/repaired in accordance with WR-ALC's work specifications. Upon receipt of vehicles from depot, an acceptance LTI should be performed. Reference Chapter 9 for warranty actions.

1.5.8.3 When instructions have been received to loan/lease a vehicle to a Government contractor, another DoD agency, or other authorized agencies, an LTI will be prepared in duplicate reflecting the current condition of the vehicle. One copy of the LTI will remain on file until the vehicle is returned and used as a receiving checklist. The other copy accompanies the loaned vehicle.

1.5.8.4 Vehicles placed on special projects and/or application may require an LTI to be prepared. Appropriate authority will make the determination and provide instructions on processing, filing, number of copies and other requirements when such a need arises.

1.5.8.5 Reinspections of new or used items which were previously inspected and classified as acceptable may be made in accordance with the following policy:

1.5.8.6 Subsequent inspections prior to issue, shipment or placing of equipment into service will be made if item has been in storage for more than 90 days, or if there is a reasonable doubt as to equipment's condition.

1.5.8.7 Any equipment which has been improperly stored or preserved shall be functionally tested if there is a reason to believe that deterioration may have resulted or that the effectiveness of preservation may have been impaired.

1.5.8.8 Any equipment involved in an accident or subject to potential damage from some other cause during shipment shall be functionally tested. Damage or discrepancies noted will be reported on SF 364, Report of Discrpeancy, in accordance with AFJMAN 23-215. An information copy of the SF 364 will be forwarded to 580 CBSS/GBL, 295 Byron Street, Robins AFB, GA 31098.

1.5.8.9 Vehicles or equipment which have been given preservation processing intended to provide protection for a specified period of time may be functionally tested at the expiration of the specified period and prior to subsequent preservation processing. Where inspection reveals preservation to have been improper, a Supply Discrepancy Report (SDR) will be prepared and submitted in accordance with AFJMAN 23-215, with an information copy to 580 CBSS/GBL, 295 Byron Street, Robins AFB, GA 31098.

1.5.8.10 Functional testing may also be accomplished at any other time there is a reasonable doubt as to condition of equipment involved.

1.6 GENERAL INSPECTION STANDARDS.

1.6.1 Appearance. The equipment, internally and externally, shall be clean, dry, and free from mud and other debris. No organizational insignia or other nonstandard markings shall be left on vehicles being shipped from using organizations. Vehicle's finish will be in such condition as to afford adequate protection against rust or corrosion, in accordance with Chapter 2.

1.6.2 Tools. Specialized tools are usually not required on general purpose and material handling vehicles. Specialized tools on all other vehicles will be provided in accordance with the directive applicable to that item of equipment.

1.6.3 Inspections shall be performed to ensure that such items as supporting, attaching, or connecting members are in good condition, that stowed or assembled items are secure, adequately lubricated, and not excessively worn or leaking.

1.6.3.1 Inspect for good condition means parts and components which are not bent, twisted, chafed, burned, broken, cracked, bare, frayed, collapsed, torn, cut, or deteriorated.

1.6.3.2 Excessively worn is construed to mean "subject to early parts failure". Excessive wear of mating parts or linkage connections is usually evidenced by too much play (lash or lost motion). It also includes illegibility as applied to markings, data and caution plates, and other printed matter.

1.6.3.3 Wooden components of equipment should be in such condition so as not to compromise their structural strength. Cracks running with the grain that do not affect strength need not be replaced. (Wood may crack from natural causes without necessarily having its strength impaired.) Bruises and dents do not render wooden components unacceptable.

1.6.3.4 Scratches, tool marks, compression and/or stress marks which do not impair structural integrity or components are ordinarily of no significance and do not render an item unacceptable.

1.6.3.5 All castings will be without cracks, securely bolted, and free from excessive lubricant leaks at all joints. Obvious imperfections, such as external blow holes, slag and sand inclusions, and improperly dimensioned sections due to imperfect molding will be cause for rejection of assemblies.

1.6.3.6 All welds of major elements must be sound. Minor welds, involving attachments only, may be imperfect provided sufficient connecting metal remains to retain attachment through normal shipment, handling, and operation without further breakage, or loss (Overlapping welds, etc.).

1.6.3.7 Components of equipment permanently attached by means of rivets or welds must be firmly attached so that loss through vibration or normal operation will not occur.

1.6.3.8 Indications of corrosion around rivets, bolts, joints, or welds will be cleaned and inspected to determine extent of damage. It will then be repaired and/or treated to prevent further deterioration.

1.6.4 Seals, Oil and Grease.

1.6.4.1 Seals used for retaining hydraulic and gear oils on revolving or reciprocating shaft applications may show slight seepage and still be considered acceptable. If seepage is sufficient to form flow tracks and drip from housing or shaft, or forms wet accumulations on adjacent members or panels from thrown lubricant, the seal shall be rejected.

1.6.4.2 Seals used for retaining grease in rotating assemblies such as wheel hubs shall show no evidence of leakage. Presence of a slight oily film on the exterior and areas adjacent to the oil seal may be caused by the capillary action of light oils present in most greases, and is not cause for replacement of seal.

1.6.4.3 Wiping surfaces of synthetic type seals shall be smooth and maintain pressure contact with intended sealing surface throughout the radial or thrust surfaces of the seal.

1.6.4.4 Leather seals that have hardened shall be rejected. Sealing edges that are worn to a sharp or ragged edge are not acceptable.

1.6.4.5 Bellows type seals (steering knuckle, CV joints, gear case shifter shafts) shall not be cut, slit, or cracked. Mounting clamps or devices shall be secure and properly installed.

1.6.5 Bearings, Anti-Friction Ball and Roller. Bearings removed for lubrication, service, or inspection, shall exceed minimum serviceability standards established in TO 44B-1-102.

1.6.6 Operational Test.

1.6.6.1 Power. Vehicle engine will be capable of effectively delivering the motive power for which it was designed.

1.6.6.2 Unusual Noises. All components of equipment will operate without unusual noises. An unusual noise is a sound which by its nature indicates a malfunction of the component or a probability that the component will, if continued in use, cause further damage.

1.6.6.3 Compression. The compression pressure developed in a cylinder of internal combustion engines shall not differ by more than the variance specified by the manufacturer. Vehicles exhibiting compression variances of more than 10 percent between cylinders shall be acceptable if vehicle is capable of attaining maximum allowable speed, runs smoothly at low speed, and shows no signs of excessive oil consumption.

NOTE

When available, chassis dynamometer check may be used in lieu of compression test. When using the dynamometer, the vehicle being checked will meet or exceed local performance standards established through implementation of Chapter 3.

1.6.7 Vacuum Tests. All internal combustion engines, except diesel engines, shall be capable of producing a steady intake manifold vacuum of 18 inches or more at idling speed, and at approximately 75 percent maximum allowable engine speed, when engine is at normal operating temperature. (Required intake manifold vacuum will be reduced 1 inch for each 1,000 feet if test location is above sea level.)

1.6.8 Pollution/Emissions Control Devices. All components of any of these systems shall be properly mounted and operating as prescribed in applicable technical publications. All systems shall meet or exceed the most stringent of requirements set forth by vehicle manufacturer, local, state, federal, or host country agencies.

1.7 MINIMUM SERVICEABILITY STANDARDS.

1.7.1 These standards are intended as guidelines. Always reference the manufacturer's technical manuals for specifics. These standards shall be applied to vehicle components in determination of vehicle classification under conditions outlined in Paragraph 1.3 through Paragraph 1.5.

1.7.1.1 Configuration Control. Vehicle repairs to operating systems will maintain the manufacturer's original configuration; for example, levers that pull to raise the dump bed will not be changed to a push action. The operation of all controls shall be clearly labeled, configured, and operate in the same manner as intended by the original manufacturer's design and technical guidance. Any wavier from this guidance shall be routed through the MAJCOM Vehicle Staff and to 580 CBSS/GBL for approval.

1.7.2 In the following numbered subparagraphs, and listed in alphabetical order, the vehicle components and the minimum serviceability standards are:

1.7.2.1 Agitator. (Bituminous Mixers and Asphalt Distributors) Components shall be correctly aligned, securely mounted, and shall have no leaks. The gear box shall contain no excessive foreign matter and be free of cracks. The gear box shall be serviced with proper lubrication and to proper level. There shall be proper clearance between face of tamper and edge of screen. Drive chains will exhibit proper tensions.

1.7.2.2 Air and Hydraulic Motors. Motors shall operate freely without excessive vibrations or without binding (correctly aligned). Fittings and connections shall be free of leaks.

1.7.2.3 Air Cleaner and Pre-Cleaner. Gaskets, seals, clamps, hoses, tubes, elements, baffles, and body shall be secure and shall not be damaged as to prevent it from operating properly. Dry type elements shall be clean. Wet type shall be clean and contain the proper amount and type oil.

1.7.2.4 Air Compressor. Compressor shall be capable of delivering a maximum of compressed air to the system without unusual noise or leaks. Unloader valve's cut-in and cut-out pressure shall be at the prescribed pressure setting of the governor.

1.7.2.5 Air Hydraulic Cylinder. Cylinder shall be capable of producing braking action comparable with variable pedal pressures applied. There shall be no leaks at gaskets, lines, or seals.

1.7.2.6 Air Governor. Air governor and lines shall be securely mounted with no leaks. Cut-in and cut-out pressure shall be within limits established by applicable publication/manufacturer's specifications.

1.7.2.7 Air Tanks, Lines, and Valves. Air reservoir tanks shall be securely mounted and free from dents or other external damage. Air dryers and/or moisture rejector shall function properly. Air hoses, lines, and their connections shall be tight and free of leaks. Safety valves shall not leak after manual operation and air pressure returned within normal operating limits.

1.7.2.8 Antifreeze Protection. Antifreeze type and strength shall be sufficient to protect the lowest expected ambient temperature. An approved antifreeze coolant shall be used year-round to provide cooling system protection. The optimum coolant/water solution shall be 50/50 or the vehicle manufacturer's specifications. Use of OEM-recommended extended life coolant is recommended throughout the vehicles warranty period. After the warranty expires, revert to use of antifreeze meeting CID A-A-52624.

NOTE

Under no circumstances will water be added to coolant system to "top off." Only the proper antifreeze type and solution shall be used to replace lost coolant.

1.7.2.9 Apron and Tail Gate. Apron and tail gate shall close properly without binding. Guide rollers shall maintain proper apron or gate alignment. Tail gate hinges and latches shall function properly and hold gate in proper alignment. Apron and tailgate shall have no cracked or bent members. Cables or chains and sheaves shall not be excessively worn.

1.7.2.10 Automatic Fire Extinguisher System. Fire extinguisher system tanks and valves shall be secure with no leaks. Tanks shall be fully charged. Lines and nozzles shall be secure. Nozzles shall be clean and properly aimed at points most likely to catch fire.

1.7.2.11 Auxiliary Fire Extinguishers/Brackets. Extinguishers shall be fully charged and securely mounted. Nozzle shall be free from corrosion and not damaged or plugged. Wire safety seals will be intact. Inspection and test record shall be affixed, legible, and current. Brackets shall be of proper type and size. Latches shall not be cracked or bent which prevent the fire extinguisher from being held securely. Brackets shall be securely mounted to vehicle or equipment.

1.7.2.12 Axle, Front.

1.7.2.12.1 Rigid Type Axle. Axle beam shall not be cracked or bent. Steering knuckle, tie rod, drag link bearings, or spindle bushing shall show no sign of excess play or movement. Camber and caster shall be in accordance with manufacturer's specifications. Wheel bearings shall be properly adjusted.

1.7.2.12.2 Live Axle. Axle housing or tube shall not be bent or cracked and shall be free of leaks. Outer machined surfaces of steering knuckle joints on axles which house constant velocity universal joints shall be free of rust or other damage. Steering knuckle boot or guard shall not be bent, torn, or otherwise defective. Steering knuckle bearings shall be properly adjusted.

1.7.2.13 Axle, Intermediate. Axle housings or tubes shall not be bent, cracked, or twisted. Spring seats and torque rod mounts shall be tight and be free from cracked welds. Axle shaft flange shall show no signs of lubricant leaks. Axle vent caps shall be free of mud and other foreign debris. Cap shall turn freely.

1.7.2.14 Axle, Rear. Same as Intermediate Axle.

1.7.2.15 Axle, Steerable Rear. Same as Front Axle Live.

1.7.2.16 Battery/Battery Box/Battery Clamps. The battery shall be of proper size, type, and capacity and without external cracks in case or cover. Connectors or sealing compound shall show no signs of leaking electrolyte. Dry charged batteries (with correct amount of electrolyte in separate containers) will normally be used for overseas shipments. When exceptions are authorized to ship wet batteries, the electrolyte shall be at proper level (3/8 inch over plates) and have a specific gravity reading of not less than 1.265 corrected to

26.6 °C (80 °F). Terminals and terminal posts shall be firmly anchored, clean, and shall show no corrosion or deterioration. The voltage reading of each cell shall be at least two volts. Nickel-iron-alkaline type batteries shall be fully charged, and the electrolyte level and specific gravity reading shall be correct for the particular battery concerned. Battery box shall be clean and show no signs of corrosion. Battery clamps shall be clean with no cracks or corrosion evident and firmly anchored.

1.7.2.17 Belts, "V" and Serpentine. All belts shall be of proper groove width and length. They shall have no visible cracks or signs of fraying, shall not bottom in pulleys (except ribbed serpentine belts) and shall be properly adjusted for tension. Friction surfaces of belt shall be capable of driving accessories without noticeable slippage. Belt tensioner shall be serviceable in accordance with applicable technical orders. (See manufacturer's recommendations on serviceability of ribbed serpentine belts.)

1.7.2.18 Bits, Augers, Drills, and Attachments. All items shall be in generally good working condition and secured. Cutting edges shall be clean and free from nicks or burrs that would affect operation.

1.7.2.19 Blowers, Boilers, and Burners.

1.7.2.19.1 Blowers shall operate satisfactorily and shall be adequately lubricated and clean.

1.7.2.19.2 Boilers shall be free from cracks/leaks, and securely mounted. (Cleaning shall be in accordance with applicable equipment manual.)

1.7.2.19.3 Burners shall operate satisfactorily. Burner tips shall be in good condition with a correct flame pattern. All accessories shall be securely mounted. Cleaner elements shall be in satisfactory condition. Fuel strainer, air supply, and stack dampers shall be in satisfactory condition to insure efficient combustion.

1.7.2.20 Body and Cab. Doors, hood, ventilators, trunks, and other operating items shall function satisfactorily. Fenders, hood, running boards, steps and other sheet metal items shall not be damaged or broken. Vehicle bodies, fenders, trunks, and hood with small dents and scratches shall be acceptable if there is no evidence of tearing or creased metal. Holes in sheet metal (other than drain or access holes) shall not be greater than 1/2 inch in diameter. All body and cab bolts will be intact and tight. Body or cargo stakes and cover bows shall be free of cracks and connecting devices shall work properly.

1.7.2.21 Bogies Suspension (Trunnions/Torque Rods/Bushings). Bogies suspension components shall not be bent, cracked, or twisted. Trunnion rollers shall rotate smoothly, free of any binding. Rubber bushing bearings or seals, and shafts shall not be excessively worn or show signs of deterioration/leaks. Torque rods shall be correctly assembled and securely mounted; metal bushings shall not be excessively worn.

1.7.2.22 Boom (Crane and Wrecking Equipment), Mast Assembly, and Insulated Booms. The boom assembly shall not be bent or deformed in such a manner as to impair strength or efficiency. All welds of major elements shall be sound. Telescopic (extensions) mechanisms will operate smoothly without binding or drag. Manual cranks shall be present, serviceable and securely mounted. Pulleys and sheaves shall have no excessive wear or broken flanges that might damage cable. All mounts and hinge bushings shall show no evidence of excessive wear or deterioration. Insulated boom sections shall be free of all dirt, oil, grease, or other foreign matter. Dielectric (voltage breakdown) test must be current in accordance with TO 36C-1-4.

1.7.2.23 Brake System (Parking Hand). Control handle or foot pedal shall have at least 1/3 of its full travel in reserve when fully applied and holding vehicle. Control cables, rods, and linkage shall operate freely. Anchor adjustments on external band type parking or hand brakes shall be properly adjusted and safety wired. Parking/hand brake will be checked in accordance with manufacturer's specifications.

1.7.2.24 Brake System (Service).

1.7.2.24.1 Service brakes will be capable of stopping vehicle effectively. When applied, service brakes will indicate no appreciable side pull, unusual noises, or excessive pedal travel and will not indicate a lack of pull back spring action. Brake pedal shall have 50 percent of total brake pedal travel in reserve when brakes are fully applied with vehicle stationary. Anti-lock brake systems shall operate in accordance with manufacturer's specifications.

1.7.2.24.2 Brake pedal on air over hydraulic and vacuum assist brake systems shall have 50 percent of total brake pedal travel in reserve when brakes are fully applied with vehicle stationary.

1.7.2.24.3 Power assist service brake pedal travel shall be in accordance with manufacturers specifications.

1.7.2.24.4 Hydraulic brake lines and fittings shall be free of leaks. Master and wheel cylinders and/or calipers shall function properly without leaks. Reconditioned cylinder bores shall not exceed 0.003 inch oversize. Master cylinder fluid level shall be within 1/2 inch of top of cylinder reservoir. Cylinder mounting bolts shall be secure.

1.7.2.24.5 Air brake system with pressure above governor cut-in point shall not bleed down more than 3 psi per minute with the service brakes in fully applied or fully release position.

1.7.2.24.6 Air brake diaphragm pushrod travel shall be within limits established in applicable equipment handbook. Diaphragm shall not leak through or around its outer edge, should diaphragm leak, complete set must be replaced.

1.7.2.24.7 Hydrovac brake booster shall display no visible interior/exterior leaks from booster when operationally checked in accordance with applicable equipment handbook.

1.7.2.24.8 Hoses, hose coupling and/or gland gaskets will not leak or show evidence of deterioration. (Hoses may exhibit minor superficial weather cracks.)

1.7.2.24.9 Riveted brake linings shall have not less than 1/32 inch of the lining material remaining above rivet heads at thinnest point. Bonded lining and disc brake pads shall have not less than 1/32 inch of original material thickness remaining at thinnest point.

1.7.2.24.10 Brake drums and rotors shall be free of cracks, hub lubricant, and brake fluid. Disc brake rotors shall meet specifications for lateral runout, parallelism, and thickness in accordance with applicable technical manual.

1.7.2.24.11 Brake combination valve and warning system shall be operational.

1.7.2.24.12 Brake pedal pads shall be firmly secured and not be worn to where metal shows beneath the pads.

1.7.2.25 Brakes (Steering). (For friction type steering brakes, as used on crawler type tractors and similar equipment which operate independently or are connected with operation of steering clutches). Riveted linings shall have not less than 50 percent of material above rivet heads remaining at thinnest point. Bonded linings shall have not less than 50 percent of original material thickness remaining at the thinnest point. Brakes shall operate effectively.

1.7.2.26 Brush Guard and Grille. Brush guards shall be securely installed and properly aligned. Original contours of metal members will be maintained. Welds shall not be cracked or have rusted areas. Grilles shall be securely mounted and properly aligned. Grilles shall not have large areas broken out or main structure members cracked or broken. Medallions and chrome strips, if applicable, shall be securely fastened.

1.7.2.27 Bumpers and Push Plate. Bumpers and push plates shall have the original contour of metal and shall not be cracked or have rusted areas. All welds and mounting bolts shall be secured. Rubber pads shall be secured and not show signs of excessive deterioration.

1.7.2.28 Cables. Boom/hoist and winch cables shall be of properly rated capacity as prescribed by manufacturer. The cable will be free of kinks, excessive wear, flat spots, frayed or broken strands, and properly lubricated. All mounts and U-bolt clips will be properly torqued.

1.7.2.29 C.B. System, Dry Chemical, Halon System, Etc. (Fire Extinguisher Equipment). Containers shall conform to appropriate technical order and/or manufacturer specifications. Desiccant tanks/containers shall be recharged prior to storage, shipment, or placing in service. Tanks shall be charged to appropriate pressures. Hoses shall exhibit no deterioration. Hose connections, couplings, piping, and tanks will display no evidence of corrosion or leakage. All systems and components shall be securely mounted.

1.7.2.30 Canvas. Canvas shall not be torn or mildewed and shall have no missing grommets, ropes, or straps.

1.7.2.31 Carburetor, Fuel Injector/Governor, and Injector Pump.

1.7.2.31.1 Carburetor. Carburetors shall be securely mounted with all attachments installed. Carburetor's circuits shall operate properly. Fuel mixture screw caps (EPA limit stops) shall not be removed and shall have full control of air/fuel mixture from rich to lean at idle. Gaskets and diaphragms shall be in good condition and not leak.

1.7.2.31.2 Fuel Injector. Fuel injectors shall be securely mounted and shall show no signs of leaking. Fuel injection pumps and fuel injectors shall operate in accordance with applicable technical manuals.

1.7.2.31.3 Governors. Governor shall control engine within 5 percent of maximum rated RPMs, but shall not exceed maximum rated RPMs. Governor shall have no surge at maximum RPMs.

1.7.2.32 Carriage Lift Forks and Mast Assembly. Cargo rest shall be securely installed and properly aligned. Welds shall not be cracked. The horizontal position of both forks shall be the same plane and be free of cracks. Forks locks shall be in place and function properly. Mast assembly shall be free of cracks and will be properly aligned. Chain sprockets and rollers shall be free from binding and cracks. Load chains shall be properly adjusted and securely anchored. All bolts and locking pins shall not show signs of wear and be secured. Backrest will be secure.

1.7.2.33 Centerpin or Gidgeon (Revolving Shovel Crane, Deicer, Manlift, or Work Platform Type Assests. All components will be securely mounted, properly adjusted and will indicate no excessive wear. Lock will operate effectively, (all adjustments shall be in accordance with applicable equipment manual). Centerpin flange mounting bolts or cap screws shall be secure.

1.7.2.34 Chains. Chains shall not be excessively worn, pitted or have broken rollers. Half/master link shall be of proper size and locking device shall be secure. Tension adjustment shall be in accordance with applicable technical manual.

1.7.2.35 Clutch. Clutch disc shall not bind or drag when disengaged and shall engage without grabbing or chattering. Clutch adjusting device shall have at least 50 percent of the adjustment range left. Clutch pedal free travel/floor board clearance shall be in accordance with applicable technical manual. Clutch release bearing shall be properly lubricated and operate without unusual noise. Hydraulic clutch master and slave cylinder shall be free of all leaks. Clutch adjustments and operational characteristics will be in accordance with manufacturer's specification.

1.7.2.36 Coil and Supressors. Coil, wiring, and shielding shall be in good condition, secure, clean and connections tight. Coil shall be capable of producing minimum voltage required by manufacturer's specifications. Suppressers shall be in good condition and effectively eliminate interference.

1.7.2.37 Commutator and Slip Rings. Armature bearings and lubricant seals shall indicate no wear or leaks. Armature and circulating air passages shall be free of excess dust, oil, and grease. Slip rings or commutator and brushes shall be in good condition and properly fitted, and brush holders secure.

1.7.2.38 Controller, Contractor and Accelerator Resistor. Controller shall be free of all dust and grit and shall operate freely. There shall be no broken springs and shunts. All connections shall be clean and tight. Contacts shall be clean and not excessively worn or rough. Contacts shall have at least 1/2 of their usable thickness intact. Contactor shall be free of all dust and grit. Contacts shall have no burned or scorched tips and will have at least 1/2 of their usable thickness intact. Cable and shunt connections shall be clean and tight. Accelerating resistor shall be free of all dust and grit, and connections shall be tight. Resistor ribbon and porcelain insulator surface shall have no defects.

1.7.2.39 Cooling System. The cooling system shall be free of leaks and capable of maintaining proper temperature range during normal engine operation. Pressurized cooling systems shall be capable of withstanding and holding recommended test pressures. Cooling systems shall be serviced with an approved antifreeze/coolant solution at the 50/50 ratio or as specified by the vehicle manufacturers. The radiator shall be clean and properly mounted. Radiator caps shall be of prescribed pressure recommended by the manufacturer. Hoses shall be of proper size and shall show no signs of deterioration. Water pump, shaft and bearings shall not be excessively worn and will operate without unusual noise.

1.7.2.40 Coolant System Pumps (Crashfire Trucks). Hand pump shall turn freely without binding or leaking. Electric pumps shall operate satisfactorily from instrument panel control. Hose connections shall be tight with no leaks.

1.7.2.41 Conveyors (Applicable to Loaders, Graders, Ditchers, Etc.). All components shall be securely mounted and in good operating condition. Conveyor belts shall ride correctly and rollers shall turn freely. All belt splices shall be in good condition. Belt tension adjustment shall be in accordance with manufacturer specifications. Frame and roller bolts shall be secured and free of cracks.

1.7.2.42 Cutting Edges (Scrapers, Runners, Shoes and End Bits Applicable to Dozers, Graders, Rooters, Drag Lines, etc.). There shall be no excessively worn, loose, cracked, or broken parts. There shall be no missing or broken parts. Wear shall not exceed 50 percent.

NOTE

Replacement parts are the responsibility of the owning organization in accordance with AFI 23-302.

1.7.2.43 Cylinders (Hydraulic). Cylinder packing glands or seals shall show no evidence of oil leaks. Piston rod/ram shall be free of nicks, burrs, or scratches that may cause damage to packing gland or oil seals.

1.7.2.44 Cylinder Head and Engine Block. Cylinder head and block shall be free of cracks or indications of oil, water or compression leaks around studs, bolts, and/or gaskets. Core plugs shall have no leaks or signs of deterioration.

1.7.2.45 Differential/Final Drive. Differential carrier shall be free of cracks or leaks around mount gasket and pinion seal. Carriers shall have no mounting studs, nuts, or bolts missing. Ring and pinion gear adjustment shall be in accordance with manufacturer's specification. Carrier bearings shall be properly lubricated and adjusted and operate free of unusual noise/lubricant leakage.

1.7.2.46 Dipper, Clamshell, Dragline, Back Hoe and Hook Block. There shall be no excessive wear, missing teeth, cracks, loose or missing bolts or rivets. Sheaves shall have no excessive wear, broken flanges worn bushings, pins, or pin retainers. Shovel, dipper, and dragline bucket shall be properly adjusted to assure satisfactory operation.

1.7.2.47 Distributor and Ignition Systems. Caps and rotors shall not be cracked, corroded, or damaged. Breaker points shall not have burned, pitted, or misaligned contact surfaces. Point opening shall be adjusted in accordance with manufacturer's specifications. Pick-up coil, magnetized field core and module in HEI distributors shall be free of dust and dirt. Advance timing device shall work properly with no worn or broken parts evident. Due to numerous and varied ignition systems, operating consult manufacturer's specifications.

1.7.2.48 Drawbar/Tow Bar. Draw or tow bars shall not be bent in such a manner as to impair strength of efficiency. All welds shall be sound and not cracked. All safety chains shall be of proper length and size. See Pintle Hook/Lock Pin, Paragraph 1.7.2.97.

1.7.2.49 Drive/Propeller Shafts and U-Joints.

1.7.2.49.1 Drive shafts shall be straight and balanced. All welds shall be sound and without cracks. Drive shaft splines shall not be worn more than 15 percent of the original splines width.

1.7.2.49.2 Universal joint trunnion bearings shall indicate no excessive rotary lost motion. U-joint bearings shall be properly lubricated.

1.7.2.49.3 Pillow block and/or center/support bearing shall not allow any radial motion and be properly lubricated.

1.7.2.49.4 Propeller shaft end yokes will be in plane when propeller shaft is assembled, with splined yoke alignment markings matched.

1.7.2.50 Drums, Elevators, and Discharge Chutes. Drums, elevators, and discharge chutes shall be properly mounted with no indication of excessive wear and shall function in accordance with applicable equipment manual.

1.7.2.51 Eccentric Shaft or Sleeve. Eccentric shafts used on jaw crushers and sleevetype eccentric used on rotary crushers shall have no excessive wear and shall be properly aligned and lubricated.

1.7.2.52 Electric Motors. The commutator surface shall have a smooth polish and shall be free of copper beads and grease. Interior of motor shall have no charred or broken insulation or other damage. Connections shall be clean, tight, and painted with proper grade of armature varnish. Bearings shall show no evidence of excessive wear or end play. Brushes shall move freely in the holders and shall be free of dirt and other foreign matter. The brush pressure arms shall be free from bending in the bodies and shall have approximately the same pressure on each brush. Brushes shall have at least 1/2 of their usable length intact. Motors shall be capable of performing their specific operation without excessive noise, arcing, or overheating.

1.7.2.53 Engine, Air/Liquid Cooled. Engine shall be free of oil leaks, securely mounted and all accessories, shrouds and attachments shall be properly installed. Engine's cylinder compression shall be within manufacturer's specifications or allowed standards listed in Paragraph 1.6.6.3, Compression. Governor shall maintain steady operation within 25 RPM of maximum rating at full throttle operation.

1.7.2.54 Exhaust System. Exhaust pipes, catalytic converters, mufflers, flame arresters, and rain caps shall not be excessively rusted as to result in early failure and shall be free of obvious leaks. Exhaust system's hangers and clamps shall not be broken and be securely mounted. Muffler's condensation drain holes shall be in the proper position to prevent early failure. Heat shields and shrouds used in conjunction with catalytic converters shall be properly installed. Catalytic converters will meet federal emission requirements. All straight up exhaust stacks shall have a rain cap installed.

1.7.2.55 Fairleads (Cranes). Bushings, sheaves, pins and mountings shall have no excessive wear. See Cables, Paragraph 1.7.2.28.

1.7.2.56 Fifth Wheel. Fifth wheel and rocker pins shall be properly lubricated and not show signs of excessive wear. Locking jaws in the locked position shall not have more than 1/8 inch wear. Locking components shall operate properly and be free of excessive wear. See King Pin and Fifth Wheel Plate, Paragraph 1.7.2.83.

CAUTION

All fuel required for testing purposes shall be removed from unit prior to shipment.

1.7.2.57 Filter Differential and Pumping Pressure. Micronic filters and filter separators shall have correct differential pressure and filter flow rate when operated at normal pumping pressure. Condition of filter elements or separators shall be determined by differential pressure readings, quantity of fuel pumped through filter assemblies, or date of installation in accordance with TO 37A-1-101.

1.7.2.58 Floodlight and Spotlights. Flood and/or spotlights shall operate properly and be securely mounted. Directing components shall be securely mounted and operate properly. Lenses shall be properly installed and shall not be chipped or cracked to the point which allows dirt or water to enter.

1.7.2.59 Floors. Floor deck/platform shall be firm and shall not be deteriorated to a point that it will not hold/sustain a load satisfactorily. Wood platform/planking shall not be dry rotted or cracked to the point it will impair its strength. Metal decks shall not be loose or have rust holes in them. All welds and attached hardware shall not be cracked or broken. There shall be no loose, missing, or broken bolts, nuts, or washers.

1.7.2.60 Foam Meter (Crash Fire Equipment). Foam tanks, filler, vent, and gauge shall be in good condition and operational. Foam metering valve shall be set and operate properly.

1.7.2.61 Frame. The frame shall not be bent, cracked or twisted. Cross members shall not be loose at point of attachment to side rails. Frames that have been repaired by welding will not be considered serviceable if welds are cracked or a good fusion of metals has not been obtained. Welded areas that extend 1/3 or more across a frame section will be reinforced with channel or angle iron over the welded area. There shall be no missing or broken bolts or rivets. Refer to TO 36A12-1A-3052-2 and TB 9-2300-247-40 for inspection and repair procedures for tactical vehicle frames. TB 9-2300-247-40 is available via the Warner Robins website, under the tactical vehicles link.

1.7.2.62 Fuel Pump/Fuel Filter. Pump shall be free of oil and fuel leaks. Pump's filter or sediment bowl shall be free of dirt or water. The pump shall be capable of providing prescribed pressure and quantity in accordance with the manufacturer's specifications.

1.7.2.63 Fuel Tank and Lines. Fuel tank shall be securely mounted to prevent shifting or movement during operation of vehicle. Tank seams, filler neck and connections shall be properly aligned, with no leaks or cracks. Lines shall be secure and anchored in a manner to prevent failure due to vibration.

1.7.2.64 Gauges and Sending Units. All instruments and/or gauges shall operate properly and be securely mounted. Pressure sending units shall be free of leaks. Dials and lenses shall be clear and free of cracks. Indicator needles and numerals shall be legible. See Meters, Paragraph 1.7.2.89.

1.7.2.65 Gantry, A-Frame, and Revolving Base. Gantry, A-frame, and revolving base shall be properly aligned and shall have no breaks, cracks, or excessive wear of pinholes and brackets. All bolts shall be in place and tight.

1.7.2.66 Generators/Alternators/Auxiliary Chargers, etc.. Generator, alternators and charging devices shall operate without undue heating and will indicate proper charging during operation. Commutators will not be burned or scored to the extent that early failures will occur. Brushes shall have at least one half usable length intact and be free from binding. Brush holders and brush springs shall provide proper pressure for contact with commutator or slip rings. Generator/alternator shall show no evidence of rough bearings or bearing play. Mountings shall be secure and free from oil and foreign material.

1.7.2.67 Grapnel and Hooks. Grapnels and hooks shall be clean and free of cracks and broken welds.

1.7.2.68 Hammers, Jaw Linings, Plates, and Rolls. These items shall not be excessively worn where damage to mounting base may occur. On gyratory-type crushers, mantle and concaves shall show no signs of looseness or excessive wear.

1.7.2.69 Heaters/Defrosters. Heaters shall be securely mounted and operate properly. Heater blower motors shall operate at proper speed and shall be free of unusual noise. Heater core and hose connections shall be free of leaks. Heater hoses shall not be cracked, brittle or mushy. Gasoline burning heaters shall ignite and operate within time limits specified by the manufacturer. Heater control systems shall operate and maintain all operating circuits in accordance with manufacturer's specifications. Defroster hoses shall not be torn and shall be connected properly. Heater/defroster control cables and linkage shall be securely mounted and operate without binding.

1.7.2.70 Heater Exchanger and Evaporator. Heat exchanger bonnets and core assembly shall have no leakage nor damaged or defective parts. Evaporator shall have no leaks, rust, or corrosion.

CAUTION

Burners shall not be operated if a trace of asphalt is leaking into the flues.

1.7.2.71 Heater Flues and Stacks (Distributors). Heater flues and stacks shall have no leaks or broken connectors or straps.

1.7.2.72 Heater Tubes and Flues (Oil Servicing Units). Heater tubes and flues shall be securely mounted and shall not leak.

1.7.2.73 Hinges and Latches. Alignment of hinges and latches shall allow opening, closing and removal of panels without difficulty. Hinges and latches shall be properly lubricated and securely mounted. Hinges for personnel doors shall be properly aligned so as to not allow door to drop or hang up when door is opened.

1.7.2.74 Hoisting Control Units. Levers, pedals and control cables shall show no evidence of excessive wear, lost motion, or rust: and they shall have excessive wear and sheaves bearings shall not have excessive wear and be properly adjusted. Brakes shall be capable of holding a capacity load, and bands shall have 50 percent original lining thickness remaining. Operating clutches shall not slip or drag under load and bands shall have 50 percent of their original lining thickness remaining.

1.7.2.75 Hoisting and Topping Winch Controls. Controls shall operate smoothly without unusual noise. Drum clutches shall have no drag, but at the same time they shall have ample movement for operation and proper travel on the screw for shifting the drum to the clutch. Lever and linkage shall have no excessive lost motion.

1.7.2.76 Horn. Horn shall be securely mounted and shall produce a loud clear signal when actuated by the horn button. The horn button shall be securely mounted within easy reach of vehicle operator and be protected from water and dirt. Relays shall be securely mounted and operate properly.

1.7.2.77 Hoses, Nozzles, and Pumps (Fuel Servicing Types). Hoses shall show no evidence of deterioration other than small weather cracks that will not impair serviceability and shall be free of leaks. Nozzles shall operate properly and shall show no evidence of leakage. Pumps shall be free of leaks and shall operate properly at the required pressure as indicated in applicable technical publications.

1.7.2.78 Hose Reel System (Fuel and Fire Units). Hose reel swing joint and hose connection shall have no leaks under operating pressure. Hose reel swing lock shall operate satisfactorily with hose reel in travel or operating position. Hose reel charging valve shall open without excessive pull on charging cable and pulleys when actuated. Hand line nozzles shall operate properly under maximum pumping pressure.

1.7.2.79 Hydraulic System. Hydraulic pumps and relief valves shall maintain operating pressure as prescribed by the manufacturer. Pumps shall operate smoothly without unusual noise. Reservoirs shall be in good condition and securely mounted. Reservoirs shall be serviced with proper lubricant and be free of water. Lines, hoses, and their connections shall be tight and free of leaks.

1.7.2.80 Ignition Wires (Secondary). Secondary wires shall be clean and free of weather cracks, chaffing and burn spots. Secondary wires shall be of proper type and length. Spark plug and distributor cap terminal boots shall be clean and form a tight seal. Sealed/water proofed type secondary wires shall be clean and the connecting end shall be secured properly.

1.7.2.81 Inter-Cooler and After-Cooler. Inter-cooler and after-cooler shall be securely mounted and connections shall not leak. Air passages shall be clean and not damaged. Relief valve assembly shall function properly.

1.7.2.82 Interior Trim. Panels headliner and floor coverings shall be clean, complete, properly mounted/anchored, and free of major tears. Molding and metal/plastic trim shall not be rusted, cracked excessively or broken, nor have missing screws/mounting clips.

1.7.2.83 King Pin and Fifth Wheel Plate. Semi-trailer king pin and fifth wheel plate shall be properly lubricated and shall not have more than 1/8 inch wear in front and rear direction. Fifth wheel plate's welds shall be sound and not cracked.

1.7.2.84 Landing Gear. Landing gear shall operate smoothly without binding or dragging and be securely mounted. Cranks shall be present, serviceable, and securely mounted. Mounting flanges/frames shall have no cracks, loose bolts or loose rivets. Landing pads/wheels shall not be bent, cracked, or broken.

1.7.2.85 Lights.

1.7.2.85.1 Clearance and Marker. Lights shall be securely mounted and operate properly. Light output shall be sufficient to be visible in normal shaded daylight. Lens shall not be cracked or broken (so as to allow water to enter housing) or be discolored. Color and number shall be mounted in accordance with Chapter 2.

1.7.2.85.2 Headlights and Parking/Directional. Headlights shall be securely mounted and properly adjusted. Sealed beam units shall be securely installed to reflect correct beam pattern on road surface. Lens shall not be cracked, broken or discolored. Filters used in blackout tail lights (M-series vehicles) shall not be cracked and shall be properly installed and conform to standards set forth in Chapter 2 or applicable technical manual.

1.7.2.85.3 Tail, Brake/Directional, and Backup. Tail lights, brake/directional, and backup lights shall be securely mounted and operate properly. Light output shall be sufficient to be visible in normal shaded daylight. Lens shall not be cracked or broken (so as to allow water to enter housing) or discolored.

1.7.2.86 Line Strainers, Baskets. Line strainers condition and mounting shall be in accordance with TO 37A-1-101.

1.7.2.87 Manhole Vents. Manhole filler cover, hinges, and front and rear air vent valves shall be clean and function properly. Gaskets shall be in good condition and in proper placement.

1.7.2.88 Manifolds (Intake and Exhaust). Manifolds shall be free of cracks and securely mounted. Manifolds and gaskets shall be free of leaks. There shall be no missing mounting studs, nuts, or bolts. Heat riser and choke valves shall operate freely.

1.7.2.89 Meters. Meters shall operate properly and shall be calibrated in accordance with Chapter 3.

1.7.2.90 Mirrors. Mirror heads shall be clear (not discolored) and free cracks and chips. Mounting brackets shall be free of bent or deformed members in such a manner as to impair strength. Mounting bolts shall be properly secured. Adjustment controls will operate properly.

1.7.2.91 Moldboard. Moldboard, circle pins, pivots, balls and sockets shall have no excessive wear and be properly lubricated. Mounting bolts, pin keepers and adjustment shims shall be properly mounted.

1.7.2.92 Mowers, Sickle, Guards, and Pitman. Pitman arm and shaft shall be properly aligned. There shall be no excessive wear in attaching or reciprocating parts.

1.7.2.93 Oil Filter and Coolers. Oil filters, coolers, or external oil lines shall have no internal or external leaks.

1.7.2.94 Oil Pans and Covers. Engine oil pan and valve covers shall not be damaged to the point that would impair the proper seal of the gaskets. Pan and covers shall be securely tightened and be free of leaks.

1.7.2.95 Oil Pumps and Relief Valves. Oil pump and relief valves, with engine at operating temperature, shall be free of leaks and shall be able to produce and maintain the required pressure as prescribed by the manufacturer.

NOTE

Condition of engine shall be considered when observing oil pump pressure indications.

1.7.2.96 Painting and Marking. Painting and markings shall be in accordance with Chapter 2, and shall afford adequate protection to the metal.

1.7.2.97 Pintle Hook and Trailer Type Connection. Pintle hooks shall be securely mounted with properly hardened bolts and lubricated properly. No excessive wear shall be found in the jaw pins and in the locking device. Safety lock pins shall be of proper size in length and be attached with a chain in accordance with TO 36-1-121. Other type connection shall be properly mounted and free of cracked welds or excessive wear.

1.7.2.98 Power Controls and Winches. Power control units and/or winches shall be securely mounted and properly aligned. Housing, drums, seals, and gaskets shall be free of leaks and cracks. Drum bushings/bearings shall not be excessively worn. Clutch and/or brake bands shall be properly adjusted and not be excessively worn. Cables shall be properly reeled on drums and be lubricated. Sheaves shall not be broken or worn to the point where cable damage might result.

1.7.2.99 Pumps (Fire). Fire pumps shall be free of leaks and shall be able to produce and maintain the required pressure as prescribed by the manufacturer. Pump casings and/or housings shall not be cracked or broken. Pump primer equipment will operate properly. Control levers will function without sticking or binding.

1.7.2.100 Rectifier. Rectifier shall show no evidence of damage due to heat, broken terminals, bent blades/plates, or excessive dust accumulation. Blowers shall operate properly. Fan blades shall have no bent blades. Transformer shall have no heat damage.

1.7.2.101 Refrigeration and Air Conditioners. Compressors shall operate properly without unusual noise. Condenser, evaporator and hoses/lines fittings shall be clean, and free of leaks. Compressor belts shall conform to the standard established in Paragraph 1.7.2.17, Belts, “V” and Serpentine. Thermostat control units shall operate properly.

1.7.2.102 Rotors and Paddles. Rotors and paddles shall be securely mounted and properly aligned.

1.7.2.103 Scarifier. Scarifier shall be securely mounted. Teeth shall not be excessively worn. Lift mechanism shall be properly aligned and operate without binding.

1.7.2.104 Seats. Seats shall be securely mounted. Seats should not have loose springs or missing padding. Adjusting devices shall operate properly. Seat covers shall not be torn, frayed nor be taped as a repair.

1.7.2.105 Seat Belts/Restraint Device. All devices shall be securely mounted and retractors and centrifugal clutches shall operate freely. Webbing will not be cut, melted or frayed. Buckles will open freely. Belt buckles shall latch and release properly without binding. Number and type seat belt installed shall be in accordance with TO 36A-1-6.

1.7.2.106 Segregators. Segregators shall meet standard established in TO 37A-1-101.

1.7.2.107 Shock Absorbers. Shock absorbers shall not have leaks, excessively worn bushings and be securely mounted. Shock absorbers shall be recommended type and size according to vehicle manufacturer and shall effectively control rebound.

1.7.2.108 Sling Mechanism and Controls. Mechanism shall operate freely and shall be free of excessive loose motion. Positive limit stops on both sides shall be in place and securely attached.

1.7.2.109 Solid Tires. Solid tires shall be of the size and type specified for the vehicle. Tires shall exceed minimum serviceable standards established in Chapter 4. For overseas shipment, at least 50 percent of the usable thickness of the tires shall be intact. Twenty-five percent of the usable thickness is sufficient for domestic shipment.

1.7.2.110 Spark Plugs. Spark plugs shall be of proper type and heat range recommended by manufacturer. Insulators shall be clean and free of cracks. Spark plugs shall be gapped and torqued in accordance with manufacturer’s specifications.

1.7.2.111 Speedometer, Tachometer, or Hour Meter. Speedometer, tachometer, or hour meter shall be mounted securely and operate without any apparent defects such as noise or fluctuations of indicating hands or pointers. The lens shall not be cracked or clouded to the extent that visibility of instrument dial or point is restricted. Dial and odometer numerals shall be legible. Hour meters shall not continue to operate in excess of 3 minutes after engine has been stopped.

1.7.2.112 Spray Bars, Piping, and Connections. Spray bars shall have no leaks or structural damage. Joints and couplings shall operate properly with nozzles in place. Spray bar support rods shall be properly adjusted.

1.7.2.113 Springs. Springs shall not have cracked or broken leaves. Springs shall be correctly assembled with rebound clips and center bolt properly torqued. Spring leaves shall not have an indication of excessive deflection or re-

verse curvature. (Reverse curvature acceptable on 4x4 models with front axle leaf springs.) Both springs shall have approximately the same deflection with vehicle parked on level surfaces. Spring shackle bolts and bushing shall not be excessively worn. Spring U-bolts shall be of proper size and length and be torqued in accordance with manufacturer's specifications.

1.7.2.114 Starter/Solenoid. Starter/solenoids shall engage and operate starter properly. The solenoid shall be clean and securely mounted. Wire connections shall be clean and tight. Starter brushes shall have 1/2 length remaining and brush holders/springs free to maintain sufficient brush pressure.

1.7.2.115 Static Ground. Static ground cables shall be replaced if more than one-third of the cable strands are broken or if electrical continuity is suspect. Clips will be serviceable and securely attached. Reels shall be mounted securely and should rewind without binding.

1.7.2.116 Steering Gear and Components.

1.7.2.116.1 The steering gear shall afford positive control of the vehicle and shall not indicate undue wear, incorrect adjustment, worn bearings, or loose connections. The steering gear box and mast jacket shall be securely mounted and in proper alignment. Steering gear shall be properly lubricated and be free of leaks.

1.7.2.116.2 Steering linkage shall be properly lubricated and be adjusted in accordance with the manufacturer's specifications. Linkage connection shall be securely fastened and locking devices shall not be missing or broken. Worm shaft shall not have appreciable end play or radial movement at mast jacket bushing/bearing.

1.7.2.116.3 Steering wheel shall not be broken or cracked to the point it will impair its strength or reliability. The steering wheel shall be properly centered.

1.7.2.117 Switches. Switches shall operate properly in all positions and shall not indicate overheating when used for extended periods. A suitable control knob or lever shall be properly installed.

1.7.2.118 Tanks. Tanks shall be clean and free of leaks. Tank baffles and fittings shall be securely mounted and free of cracked welds. Fuel and oil tanks interior coating shall be in accordance with the provisions of TO 36Y31-1-1.

1.7.2.119 Tires. Tires shall be of the size and type specified by the vehicle manufacturer. They shall be free of cuts, fabric breaks, or other damage that would cause early failure. Tires of different construction design (belted bias, radial, and bias) shall not be intermixed on the same vehicle. Tires of different tread design or tread diameter shall not be mixed on the same axle. Tires on vehicles being shipped shall have 50 percent of tread intact. Retreaded tires will not be used on ambulances, law enforcement sedans, the front wheels of buses or for any other reasons cited in Chapter 4.

1.7.2.120 Thermostat and Shutters. Thermostats shall operate properly and shall be of the correct temperature range prescribed by manufacturer. The shutters control mechanism shall operate freely without binding and shall not have excessively worn components. Shutter control devices shall be clean and free of leaks. Shutter vents shall not be bent, broken, or missing.

1.7.2.121 Tilt and Lift Control Mechanism. Lever and/or control mechanism shall operate freely without binding or dragging and shall not have excessive worn components.

1.7.2.122 Transmissions, Transfers Cases, and Power Takeoffs.

1.7.2.122.1 Transmissions. Conventional transmissions shall shift into the selected gear smoothly and without unusual noise. Synchro-clutches and shaft bearings shall not be excessively worn and operate properly without unusual noise. Automatic transmissions shall shift into proper gear at specified speed without hesitation or clutch slippage. Transmission case, pan, and attached covers shall be securely mounted and be free of leaks. Transmissions shall be serviced with the proper lubricants at prescribed levels. Operational linkage shall be properly adjusted and operate without binding.

1.7.2.122.2 Transfer Case. Transfer case shall shift into the selected gear range smoothly and without unusual noise. Sprague units and shift bearings shall not be excessively worn and be properly adjusted. Transfer case and attached covers shall be securely mounted and free of leaks. Transfer cases shall be serviced with the proper lubricant at prescribed levels. Shift linkage shall be properly adjusted and not be excessively worn.

1.7.2.122.3 Power Takeoffs. Power takeoff units shall be properly secured and free of leaks. Controls shall be properly adjusted and not be excessively worn.

1.7.2.123 Turret System (Crash Fire). Turret operation shall be smooth and accurate with positive reaction from turret controls. Hydraulic cylinders, control lines, hoses, and swivels shall be installed properly and free of leaks. Turret shall be capable of operating under full operating pressures and flow rate during water and foam operation.

1.7.2.124 Valves And Piston Rings. Valves and lifters shall not have excessive lash or clearance. Valve stems and guides shall not be worn to the point that excessive oil consumption or plug fouling is present. Valve faces and valve seats shall be in good condition so as to prevent undue loss of compression. Piston rings shall not be excessively worn

as to cause excessive oil consumption or plug fouling. Compression test reading shall meet or exceed requirements prescribed in Paragraph 1.6.6.3.

1.7.2.125 Voltage Regulator. Voltage regulator shall operate properly at controlled rate of voltage output. Voltage regulators shall be securely mounted and their connections shall be clean.

1.7.2.126 Warning Devices (Backup). Warning devices shall be securely mounted and shall emit a loud, clear warning (signal) when actuated by placing transmission in reverse. Wiring connections shall be clean and tight. Relays shall be securely mounted and operate properly. Wire installation shall not be chaffed or worn through.

1.7.2.127 Water/Foam Tank. Water and foam tanks shall be in serviceable condition and securely mounted. Tank filler cover or manhole, gasket, and fastening device shall be serviceable. Tank valves and piping shall be securely mounted and shall have no leaks.

1.7.2.128 Water Lock Valve. Ballast and operation shall be in accordance with TO 37A-1-101.

1.7.2.129 Wheels, Sprockets, and Tracks.

1.7.2.129.1 Wheels. Wheels shall be of proper size and type in accordance with vehicle manufacturer. Wheels shall not be cracked or damaged so as to impair sealing of tire to rim. Lock rings or wheel grooves shall not be bent, rusted, or pitted to the extent proper fit is impaired. Wheel lug bolt holes shall not show evidence exceeding 1/8 inch out-of-roundness condition. Lug bolts/nuts shall all be present and have proper torque.

1.7.2.129.2 Drive Sprockets. Drive sprocket shall not be worn more than 1/16 inch on driving face. The throat or track-guiding surfaces of sprocket flanges shall not be worn more than 1/8 inch deep at any point. Idler flanges shall not be worn more than 3/16 inch deep at any point on track guiding surfaces. Bogie top rollers shall rotate freely and will be free of flat spots on the cylindrical surfaces. Idler shackles shall swing freely on the idler post.

1.7.2.129.3 Tracks. Rubber or steel tracks shall have at least 1/2 of their original usable treads thickness intact, and shall be free of cuts, grooves, cracks, or other damage likely to cause early failure. The usable thickness of these treads is approximately 1/4 inch. The track blocks shall not vary more than 1/8 inch in thickness. “Road Pads” if installed, will have a minimum of 50 percent of pad life remaining.

1.7.2.130 Windshield and Windows.

1.7.2.130.1 Windshield and windows shall not be clouded or have foggy areas extending more than 2 inches from edge of glass. The glasses shall not have cracks with a radius of 25 percent of the length or width of glass or in accordance with local laws/manufacturers manuals guidelines whichever are more stringent. Cracks extending to opposite edge or through both laminations shall be rejected. Star, bull’s-eye, or combination cracks successfully repaired in accordance with approved maintenance practices shall be considered serviceable.

1.7.2.130.2 Plexi-glass shall not be used for windshields. Plexi-glass installed on doors shall not have major scratches and/or abrasions. Plexi-glass, which exhibits minor discoloring or abrasions that affect operator’s vision, which cannot be removed by polishing, shall be replaced.

1.7.2.131 Wiper Motor, Blades, and Washers. All components shall be securely mounted and shall operate properly. Wiper blade edges will be pliable and will maintain full contact with glass. Wiper arms will have adequate tension to ensure effective wiper action. Arm or blades will not strike frames or division bars when operated. Hoses shall show no evidence of leaks or signs of deterioration. Washer spray pattern and quantity shall be sufficient to cover wiped area of window.

1.7.2.132 Wiring and Connections. All wiring shall be of proper gauge and be securely attached/mounted to prevent damage. All connections shall be clean and secured. Wiring insulation will be free of significant weather checks, and shall not be frayed/chaffed so as to expose internal conductor. Wiring harnesses shall be secured in such a manner that they will not interfere with other components or be subject to potential damages.

1.7.2.133 Certified vs. Qualified Welder.

1.7.2.133.1 Certified Welder: A person who has completed a welder’s training course and possesses one or more of the following:

a. Certification from American Welding Society.

b. Certification for Aircraft Welders in accordance with TO 00-25-252.

c. Certification from a third party that weld samples have been destructively inspected and found acceptable.

1.7.2.133.2 Qualified Welder: A task qualified welder.

CHAPTER 2
PAINTING, MARKING, AND LIGHTING

2.1 PURPOSE.

The purpose of this chapter is to provide standard painting and marking requirements and instructions, as well as minimum lighting requirements for USAF owned, leased, or rented vehicles. Wing/Group commanders will not authorize deviation from painting, marking, and lighting standards prescribed within this Technical Order without approval from MAJCOM unless deviation authority is specified herein. MAJCOMs will determine if additional approval is necessary beyond their level (580 CBSS/GBL).

2.1.1 These provisions apply to all vehicles owned, leased, or rented to the USAF, including the Air National Guard, identified in Federal Supply Groups 23, 24, 38, 39, and 58, and those in Federal Supply Classes 1740, and 4210.

2.1.2 The provisions of TO 35-1-3 apply to equipment designated as USAF Ground Support Equipment.

2.1.3 The term "vehicle" includes wheeled, tracked, and combined wheel and track laying vehicles and chassis, powered by self-contained power unit, trailers, and semi-trailers.

2.1.4 For environmental and bio-environmental reasons, the automotive industry does not normally use paint containing lead. For that same reason, lead based paints must not be used when repainting Air Force vehicles. Any deviation from this policy requires a waiver from 580 CBSS/GBL.

2.1.5 Coating systems include all primers and topcoat components. Coating systems selected for use on USAF vehicles shall meet all volatile organic compound requirements and other environmental requirements for the area where the equipment is based.

2.2 REQUIREMENT FOR PAINTING.

2.2.1 TO 1-1-8, Guide for Painting. Repainting of vehicular equipment is authorized when adequate protection must be afforded against corrosion and the cost of repainting is less costly than spot painting. Repainting of surfaces which have been repaired following an accident is also authorized. However, equipment will not be repainted merely to change the color, gloss characteristics or to improve the appearance, except as indicated in Paragraph 2.2.2 below. Frequent washing and appropriate maintenance of painted surfaces by operators will maintain the desired vehicle appearance. Normal deterioration of painted surfaces, such as chips, scratches, and minor corrosion, is to be expected and shall not be cause for complete repainting of a vehicle. Equipment programmed for replacement and removal from the inventory will not be repainted.

2.2.2 MAJCOM Vehicle Staff (or equivalent) may authorize refinishing of vehicles in colors other than those specified in this TO when required to meet security or operational requirements. Initial authorization may be verbal for immediate mission requirements, followed by written approval as soon as mission requirements allow. A copy of the written approval will be sent to 580 CBSS/GBL.

2.2.3 Spot painting, in lieu of complete refinishing will be accomplished to the greatest extent practical. The use of premixed aerosol paint cans shall be kept to the minimum necessary to refinish small areas, less than 1 soft total. Spot painting or panel repair painting shall be accomplished using environmentally approved application equipment such as high volume low pressure spray equipment or touch-up spray guns. The use of small paint brushes, SEMPEN applicator tips, and rollers are also encouraged. Use the same type of primer coatings and topcoat finishes for touchup as is applied to the surrounding areas.

2.2.4 Bare surfaces or sections of bodies and sheet metal which have become exposed by deterioration of paint or by accident, will immediately be spot painted to prevent deterioration of the sheet metal.

2.3 AUTHORIZED COLORS.

2.3.1 For camouflage purposes, theater commanders in overseas areas are authorized to deviate from the colors prescribed herein when approval from MAJCOM has been received. Blanket approvals may be published in MAJCOM supplements, if applicable.

2.3.2 This authorization can also be applied to vehicle marking procedures, such as the use of lusterless black enamel for marking a vehicle painted olive drab. An example reflecting overseas command exercise of this authority is Project Tone Down as authorized by USAFER 400-16. It is not necessary that overseas command deviations to color/marking procedures provided in Paragraph 2.3 be published in this Technical Order; nor will prior approval by WR-ALC on an individual basis be required.

2.3.3 Within CONUS, lease conservative colored vehicles when dark blue is not available.

2.3.3.1 GSA/lease vehicles will be treated the same as government owned vehicles and marked in accordance with Chapter 2. In accordance with Federal Management Regulation 101-38.203, the only additional markings authorized on GSA leased vehicles are for security and law enforcement vehicles. Any other markings must be authorized in writing by the HQ GSA Fleet Manager (i.e., the Memorandum of

Understanding between the AF and GSA for marking GSA vehicles with white tops). In all cases, additional markings that cause damage or discoloration of the paint will be billed back to the user by GSA upon vehicle rotation or replacement.

2.4 GENERAL ADMIN USE VEHICLES.

Air Force general administrative use vehicles including sedans, station wagons, school buses, truck tractors, etc., shall be manufacturers dark blue or conservative color.

2.5 FIRE TRUCKS.

Crash, fire, and rescue, structural and ramp fire fighting, Fire Chief and Assistant Fire Chief: When fire fighting vehicles require complete repaint for corrosion control or accident damage, upper portions of the cab (from window belt line up) shall be painted white, color number 17875, and lower portions will be painted solid red, color number 11136 of Federal Standard 595. All other administrative use motor vehicles used to support fire fighting vehicles will remain the color specified in purchase requests. They may be equipped with distinctive identification markings, sirens, and rotating beacons as required for emergency use, provided that these items are affixed to a removable roof mounted rack. The rack may be marked to identify a particular fire fighting function.

NOTE

Fire trucks returning from DEPOT that are not painted red/white as specified will not be repainted solely to meet the requirements of this chapter.

2.6 AIRCRAFT REFUELING VEHICLES.

Aircraft refueling vehicles shall be painted full gloss dark green, color number 14052 of Federal Standard 595.

2.7 LIQUID OXYGEN/NITROGEN TRANSPORTING.

Liquid oxygen/nitrogen transporting equipment compressed gas semi-trailers and propellant semi-trailers shall be painted as specified below:

2.7.1 Liquid oxygen/nitrogen transporting equipment shall be painted strata blue, color number 15045 of Federal Standard 595, except the top three-fourths of the tank which shall be painted full gloss white, color number 17875. Interior of compartments shall be painted semi-gloss green, color number 24533 of Federal Standard 595.

NOTE

When storage compartments and trim prohibit painting the top three-fourths of the tank white, i.e., A/M32R-6, the tank will be painted white down to the top of the storage compartments.

2.7.2 Compressed gas cylinder semi-trailers shall be painted full gloss green, color number 14052, except the cylinders. All cylinders shall be painted full gloss white, color number 17875.

2.7.3 A/M32R-16 and A/M32R-17 propellant semi-trailers will be painted full gloss green, color number 14052, except the top threefourths of the tank shall be painted full gloss white, color number 17875 of Federal Standard 595. Interior of compartments shall be painted strata blue, color number 15045.

2.8 LAW ENFORCEMENT SEDANS.

Law enforcement sedans shall be painted full gloss white, color number 17875.

2.9 OTHER SPECIAL PURPOSE VEHICLES AND VEHICULAR EQUIPMENT.

All other vehicles and vehicular equipment not specifically addressed elsewhere in this TO will be procured with the OEM standard color. The rationale for this policy is based on manufacturer's standard practice of charging an extra premium per vehicle for alternate color choices. Constrained vehicle buy budgets warrant procurement of these assets in the manufacture's standard colors. Each MAJCOM is authorized to procure vehicles and vehicular equipment with any color required, based on operational mission and security requirements.

2.10 AMBULANCES.

Ambulances shall be painted as specified below:

2.10.1 Metropolitan/van type and modular emergency ambulances shall be painted full gloss white, color number 17875 of Federal Standard 595. A 6-inch wide continuous stripe of full gloss orange, color number 12473 shall be painted immediately below the windows the entire length of both sides and rear of the vehicle.

2.10.2 Tactical military design (M series) vehicles, mobile tactical communications systems equipment/vehicle, mobility coded vehicles shall be painted in accordance with MAJCOM operational requirements.

NOTE

Field type ambulances currently painted strata blue will not be repainted until the paint has deteriorated or been damaged to a point where repainting is deemed necessary.

2.11 OSI VEHICLES.

Vehicles used by the Office of Security Investigations (OSI), and vehicles used by Air Force Security Assistance Center (AFSAC) for intelligence operations purposes may be painted a color other than specified herein.

2.12 RECRUITING SERVICE.

Recruiting service van used in advertising and publicity are exempt from the painting requirements of this technical order. The colors, painting schemes/designs for these vans will be as directed by the Commander, USAF Recruiting Service. The identification markings required by Paragraph 2.25 of this technical order are mandatory.

2.13 PAINTING OF VEHICLE TOPS WHITE.

2.13.1 MAJCOMs have the option to approve painting tops white on sedans. No approvals will be granted for use below the Wing/Base Commander or equivalent level. In agreement between HQ USAF/A4RE and HQ GSA-Fleet, the only authorized “White Top” on Wing Commander’s GSA-leased vehicle is 3M Controlac Plus Graphic Film or other approved equivalent. The using organization is responsible for all application and removal costs including vehicle appearance damage or paint mismatch caused by the process.

2.13.2 The tops of ambulances and convertible buses may be painted white in areas where extreme heat is prevalent and vehicles must remain stationary for extended periods of time with patients remaining on board. When authorized by the MAJCOM, the LRS/Vehicle Fleet Manager may approve painting bus tops white, providing the paint used is base coat white polyurethane clear coat. The painted portion should extend to, but no lower than, the side windows.

2.13.3 With MAJCOM approval vans and semitrailer vans used for communications, photographic, repair shops, etc., in which assigned personnel perform duties and are located in areas where extreme heat is prevalent may have the tops painted white.

2.13.4 With MAJCOM approval special purpose, construction and base maintenance vehicles used in areas where extreme heat is prevalent which remain in a stationary position with personnel remaining in the cabs for operation of the equipment may have the tops painted white.

2.14 EXCESSIVE GLARE.

Painting of vehicles to eliminate excessive glare may be accomplished in the following instances; Instrument panel tops may be repainted with a lusterless paint to eliminate excessive glare. Relocation of data plates and decals is also permitted to eliminate glare.

2.15 INTERIORS.

The original manufacturers color of interiors will be retained.

2.16 CAMOUFLAGE PATTERN PAINTING.

Camouflage pattern painting will be accomplished in accordance with TO 36-1-161, Section VI, and TO 36-1-171, Chapters 1-5.

2.17 THERMAL SPRAY EQUIPMENT.

2.17.1 Thermal spray coatings provide very durable, long-term corrosion protection to high wear areas on equipment and/or vehicles.

2.17.2 For the purposes of this technical order, thermal spray coatings are considered a metalization process and are addressed as metal wire arc spray (MWAS) coatings.

2.17.3 There are several methods of thermally spraying metal alloys. For coating large sections and components, the most commonly used equipment in the Air Force is dual metal wire electric arc spray. The types of equipment listed in this manual are recommended for field, depot level, and OEM production levels. Organizations may use the Thermion 500 and the Thermion Bridgemaster or equivalent systems for metalizing operations. Thermion equipment may be procured from Thermion Metalizing System, Ltd., P.O. Box 2136, Silverdale, WA 98383-2136. Table 2-1, page 3, lists currently authorized metalization materials and various sources of supply.

NOTE

Prior to utilizing any thermal spray process on vehicles, obtain approval from 580 CBSS/GBL. Follow all manufacturers’ guidance on the thermal spray equipment, surface preparation, and application processes.

2.17.4 In the MWAS process, two electrically isolated wires of the selected coating material are given opposite DC polarity using an arc-welder power supply. The wires are simultaneously fed to an application gun where they are brought into close proximity to initiate an electric arc. The arc between the two impinging wires results in a local region of high temperature plasma and molten metal. A jet of compressed air, directed through the arc region from behind, disperses and projects the molten metal to the surface being coated. The metal droplets impinge on the substrate, solidify and bond to form a continuous barrier/sacrificial coating for cathodic protection of the metal structure. The application gun remains 8-12 inches from the metal surface and negligible heat is imparted to the substrate even during extended coating activities.

2.17.5 Proper application of these metalized coatings requires that the substrate be prepared with a minimum near-white abrasive blasting condition with a 2+mil anchor profile. Industry specifications for zinc-metalized coatings typically call for a 46-mil thick coating. For aluminum, a 10-mil coating is required due to the differing protection mechanisms provided by the two metal coatings.

WARNING

The metalizing process produces medium to high local noise levels, metal oxide fumes and ultraviolet radiation emissions from the arc region of the spray unit. During initial metalizing process planning, consult your local bioenvironmental engineer for the proper hearing protection, respiratory and other personal protective equipment approvals.

2.17.6 The porous nature of metalized coatings allow deep penetration of a liquid sealer or coating and result in a “dry to the touch” condition in less than 20 minutes under high humidity ambient conditions even without the benefit of baking.

2.17.6.1 The liquid sealer or coatings are not required but do provide additional corrosion protection or colorization.

NOTE

If left unsealed/un-top coated, the 85/15 percent zinc/aluminum alloy sprayed surfaces will age to a dark “gun-metal” gray color. The unsealed/uncoated 100 percent aluminum will retain its silver color.

2.17.6.2 On high temperature components metalized with aluminum, organizations may use METCOSEAL SA silicone aluminum sealer to prevent any rust staining that may occur. This sealer is available from:

METCO INC.
1101 Prospect Avenue
Westbury, N.Y. 11590

2.17.7 Follow the thermal spray equipment manufacturers’ preparation and application instructions. The metalized coating shall be applied to a minimum thickness of 6 mils and maximum of 8 mils.

NOTE

The use of a multi-metal dry film thickness (DFT) gauge such as the Positector® 6000 series, or equivalent, is required to accurately measure the applied MWAS coating thickness.

2.17.8 Any surface which shows visible moisture rust, scale or other contamination shall be re-blasted or otherwise mechanically cleaned to the proper surface finish prior to metalizing. The surface must be completely coated to the specified thickness within six hours of completion of abrasive blasting. Abrasive blast only the area that will be metalized within the given workday

2.17.9 The metalized coating shall be inspected for thickness by using a multimetal dry film thickness Gauge to ensure correct surface thickness is achieved. All surfaces that have not received the optimal coating thickness of 6-8 mils, or other uncoated areas, must be immediately roughened with a mechanical grinder with a minimum of a 25-grit disc. Manually apply a “cross-hatch” grinding pattern to the substrate with only enough pressure to roughen the surface that will be coated. Immediately apply the thermal spray coating to reach the proper coating thickness.

2.17.10 Properly applied metalized coating provides excellent long-term corrosion protection. Unless a color is required on thermal sprayed coating for operational purposes, MAJCOMs may elect to leave any completely metalized equipment unpainted.

2.18 SAFETY PRECAUTIONS.

The safety precautions contained in TO 1-1-8, Paragraph 5.1 which are applicable to the operation of vehicle paint shops and spray-painting of vehicles, shall be adhered to during cleaning and repainting of vehicles and ground servicing and powered ground equipment. The following specific safety precautions will be taken to ensure the safety of personnel and to prevent accidental damage to equipment.

2.18.1 Paint spray respirators meeting National Institute of Occupational Safety and Health (NIOSH) requirements will be worn by painters during spray operations. Contact the local bioenvironmental engineer (BEE) to schedule respira-

tor training and respirator fit test prior to assigning a technician to paint tasks. The BEE is the only authority to determine the appropriate respirator for all given painting operations.

2.18.2 All indoor spray painting shall be accomplished in a vehicular paint spray room having a minimum face air velocity of 125 fpm.

2.18.3 Smoking or open flame devices are prohibited in the paint shop. The mist that comes from a spray gun is highly flammable, and a spark or flame of any type will cause it to flash or explode.

2.18.4 To eliminate fire hazards, it is essential to keep the paint shop clean. Walls and floors of paint spray booths should be covered with a noncombustible product that can be removed when dirty.

2.18.5 Dirty rags and paper refuse shall be kept in separate metal containers with self-closing lids and appropriate markings. The contents shall be removed and disposed of at the end of each operating shift.

2.18.6 All electrical installations and equipment used in painting areas shall comply with the requirements of NFPA STANDARD NO. 33, Spray Application Using Flammable Materials and National Electric Code Number 70.

2.18.7 All supplies of paint, thinner, etc., authorized within the paint rooms, shall be kept in OSHA and NFPA Code 30 approved, grounded metal cabinets, ventilated by vent holes to prevent accumulation of vapors. Thinners, solvents and other highly volatile flammable agents authorized for use at the work site, shall be kept in OSHA and NFPA Code 30 approved, grounded metal safety cans.

2.18.8 All paint-spraying equipment shall be kept thoroughly clean and shall be inspected frequently to insure that it is in serviceable condition.

2.18.9 Frequent inspections shall be made of electrical equipment by qualified electricians to insure proper operation and to eliminate fire hazards due to short circuits, defective electric switches, or improper maintenance.

2.18.10 The paint-spray room or paint-spray booths shall be protected by an adequate amount of the proper type fire extinguishers, and install water sprinklers.

2.18.11 All personnel engaged in acid or caustic cleaning operations shall wear rubber gloves, aprons, boots, goggles, and respiratory protection equipment approved by Base Medical Services and Ground Safety.

2.18.12 No acid or other oxidizing agents shall be permitted in the paint room or stored where they may come in contact with painting materials at any time.

2.19 PREPARATION FOR PAINTING.

2.19.1 Fuel oil servicing trucks and trailer tanks shall be drained of all fuel and oil prior to painting, and the tanks will be completely filled with water or the vapors will be removed with steam, in accordance with TO 36Y31-1-1.

NOTE

The steam hose shall be of conductive rubber and shall be grounded to the truck/trailer; the truck/trailer shall also be grounded before beginning steaming operations.

2.19.2 In instances where the chrome finish is deteriorated on body hardware, exterior trim moldings or bumper bars and replating is considered economically feasible, restoration to original finish may be made. When facilities and/or funds are unavailable for replating, these parts may be painted with applicable color coat when they are rusted or damaged excessively.

2.19.3 Preparation of surfaces for application of polyurethane paint MIL-PRF-85285D type I, in accordance with TO 1-1-8, Chapter 3.

WARNING

- Chromic Acid (SAE-AMS2470) is highly toxic to the skin, eyes, and respiratory tract. Avoid all contact. Skin and eye protection and vapor control are required. Assure this operation has been reviewed by the local bioenvironmental engineer.
- Chromate (SAE-AMS-C-81769) is toxic to skin, eyes, and respiratory tract. Avoid skin and eye contact. Good general ventilation is normally adequate.
- Airless spray guns use very high pressure. To prevent injury, hands will not be used to check the output.

2.19.3.1 Surfaces for all vehicular equipment except C and E vans/shelters shall be prepared in accordance with TO 1-1-8, MIL-HDBK-808, Air Force change drawing number 98752-7737593.

2.19.3.2 The surfaces of communications and electronic vans/shelters may be prepared with either PR-1432GV polysulfide primer, or MIL-PRF-23377J epoxy primer. The major command owning the vehicle may specify an alternative primer to be used. Refer to TO 1-1-8 and the manufactures instructions for the mixing and application of epoxy primer MIL-PRF-23377J and polysulfide primer PR–1432GV. In the event of instructional conflict, the primer

manufacturer application instructions shall take precedence. Pre-treat all bare aluminum with a non-chromate conversion coating such as Henkle Alodine® 5700, or equivalent, prior to application of polysulifide primer. Apply two coats of polysulifide primer, preferable with an airless spray gun. Each coat should provide a dry film thickness of 1.0 to 1.5 mils (0.025 to 0.038 mm). Allow manufacturer's recommended drying time between each coating.

2.20 SPECIALTY COATINGS.

2.20.1 In addition to the metallizing materials, and the standard automotive primers and paint topcoats, there are several specialty coating systems that are particularly effective for military vehicle applications.

2.20.2 Zinc-rich primers offer superior corrosion protection when applied over properly prepared carbon steel. The primer typically contains 60-80 percent by weight of zinc metal dust that provides the corrosion protection to steel surfaces on which it is applied. If the topcoat is applied relatively thin, the zinc particles often are not totally covered by the topcoat. As a result small particles of the zinc dust may be exposed to the air. As the zinc reacts with the environment, the zinc particles may turn white and show up as white specks in the topcoat.

2.20.2.1 To resolve this issue, a two part primer system has been approved for use on abrasive blasted or other properly prepared carbon steel surfaces. This is the preferred primer coating material only if the steel base metal surface is properly prepared. The system consists of the wet-to-wet application of zinc-rich primer and an intermediate primer over the zinc rich primer.

NOTE

- Follow the primer coating manufacturer's directions on paint spray gun and fluid cup type and the selection of the paint gun fluid tip, fluid needle, and air cap. Failure to follow the coating manufacturer's guidance on equipment selection and use may result in the zinc rich primer clogging the paint spray gun.
- Do not use zinc-rich primer as an intercoat adhesion promoter for topcoat touchup. Zinc-rich primer is designed to be applied only over properly prepared bare steel.

2.20.2.2 Two-Part Zinc Rich Primer Coating System. The two-part coating system consists of one coat of zinc-rich primer, conforming to MIL-PRF-26915D, Type II and a wet-to-wet application of one coat of MIL-P-53030A(2), a water reducible chrome and lead free intermediate primer. The wet-to-wet application means immediately after applying one coat of the zinc rich primer, clean the spray gun and apply the second coat of primer using MIL-P-53030A(2). The wet to-wet application ensures bonding between the two primers. The MIL-P-53030A(2) provides a smoother primer coating and covers any zinc particles that may later cause white specks through the topcoat. The smoother the primer coating, the smoother the appearance of the topcoat.

2.20.3 Ceramic-Loaded Coatings. The ceramic-loaded coatings are epoxy coatings filled with ceramic particles that provide long term erosion, wear, and corrosion protection. Ceramic-loaded coatings, manufactured by Freecom Inc., Big Spring TX, or equivalent, are for optional use only in high wear areas where chalking and fading is not an aesthetic concern. Units desiring to use this material should contact 580 CBSS/GBL for approval prior to use.

NOTE

Epoxy coatings will fade and present a chalky appearance if exposed to sunlight for long periods of time.

2.20.3.1 Ceramic-laden epoxy coating material is used for application to high erosion and high wear areas such as inside of street sweeper debris hoppers. The application surface must have all corrosion removed and have a 2+ mil surface profile for the material to properly adhere.

2.20.3.2 For high wear areas, ceramicladen epoxy coatings, such as CeRam-Kote SPG® or equivalent, should be procured in contrasting colors. One color of ceramicladen coating should be applied to a dry film thickness (DFT) of 15 mils. After 3 hours, the contrasting color should then be applied directly over the top of the base color for a minimum total DFT of 36 mils. Applying multi-colored applications will provide a method of determining when the debris wear paths require recoating before bare metal is evident. When the base coat color first becomes visible through the secondary topcoat, the vehicle should be scheduled for drop-in maintenance as soon as practical. The ceramic-laden topcoat should then be reapplied to bring the total DFT back to the appropriate thickness.

2.20.4 Spray-In Bed Liners. Spray-in bed liners provide corrosion protection to cargo vans, pickup trucks, trailer beds, etc. The spray-in bed liner, if properly applied, is far superior to plastic drop-in liners. Drop-in liners allow fluids and water condensation to collect under the liner, resulting in corrosion that may go unnoticed causing significant maintenance repair or equipment condemnation.

2.20.4.1 There are numerous commercial vendors applying spray-in bed liner materials under various trade brand names. The preferred material for application to USAF trucks is aliphatic polyurea.

2.20.4.1.1 Aliphatic polyurea is a two component material that provides a very durable, non-fading, barrier coating.

Specialized heated plural component application equipment may be required to apply this material. Organizations are authorized to have this material applied commercially.

2.20.4.1.2 Authorized aliphatic polyurea spray-in bed liner material specifications should at a minimum have the following properties as found on the specific material data sheets.

a. Shore A Hardness: 92 ±2. This property determines the hardness of the material.

b. Tensile Strength: 1800 psi minimum. This property is the ability of the material to withstand being pulled apart.

c. Percent Elongation: 200 percent minimum. This is the ability of the product to stretch without disbonding from the surface that it is applied to.

d. Water/Moisture Absorption: ~1.6 percent. This is the ability of the product not to absorb or allow moisture to permeate through the coating to the surface that it is applied.

CAUTION

Aromatic polyurea is not a suitable substitute for aliphatic polyurea. Aromatic polyurea is less resistant to sunlight and will fade and chalk over a period of continued exposure to sunlight.

2.20.4.1.3 Apply the aliphatic polyurea to clean, dry, sound surfaces free of any loose particles or foreign matter. Scuff the surface with a minimum of 100 grit abrasive paper. Repair any defects in the surface being painted prior to top coating with polyurea. Apply the polyurea in a manner to have a minimum 0.25 inch dry film thickness.

2.20.4.2 An alternative to the polyurea is a sprayable polyurethane truck bed liner type coating, Morton Paint Company PN 1440-2, or equivalent, on high wear areas and storage compartment interiors. Colors shall be black or consistent with the existing color utilized on the equipment.

2.20.4.2.1 Polyurethane spray-in bed liner materials are commercially available vinyl polymers. This material will provide better protection than drop-in bed liners, but it is not as durable as the aliphatic polyurea spray-in bed liners.

2.20.4.2.2 The polyurethane spray-in bed liner material will require coating maintenance touchup when it is damaged to prevent corrosion. Prepare and apply this material per the coating manufacturer's instructions.

2.20.5 Prior to coating any new galvanized steel, remove any surface grease, flux, or oil with a commercial prepaint wax and grease remover. Apply one wet coat of a waterborne wash prime primer, Sherwin Williams P60G2 (primer)/ R7K44 (catalyst) or equivalent.

2.21 PRIME COATS.

2.21.1 The first coat of primer will be applied within 24 hours after completion or treatment of bare metal surfaces. Allow it to dry thoroughly, then sand lightly.

2.21.2 Apply one or two coats, as required, of surface sealer, MIL-HDBK-1223 to wood surfaces of vehicle bodies, allowing a minimum of one hour drying time between coats.

2.21.3 Apply a medium coat of bituminous paint, MIL-C-450 to undersurfaces of wood floor decking.

NOTE

To preserve nuclear certifications, replacing wooden floors on trucks or trailers with "Rumber" is not authorized without prior written approval from 580 CBSS/GBL.

2.21.4 When it becomes necessary to replace wooden floors of trucks and trailers, use hardwood material (wood, metal and plastic decking). Treat using guidance from MIL-HDBK-1223 and obtain a suitable pretreated hardwood material from local commercial market. The pretreated hardwood material obtained commercially shall be material that is normally used in commercial industry for flooring trailers, trucks, and all other vehicular equipment.

WARNING

All spray painting will be accomplished in an exhaust ventilated booth meeting requirements of OSHA 1910.107. Respiratory protective devices will be used when required by local safety office and medical services Bioenvironmental Engineer.

2.21.5 Prime coating for the MIL-PRF-85285D, Type II coating system, will be applied in accordance with TO 1-1-8 and the coating manufacturer's instructions. For equipment located in or operating in severe corrosion prone locations, apply the two-part primer system conforming to MIL-PRF-26915D and MIL-P-53030A(2).

2.22 FINISH COATS.

WARNING

Enamel and polyurethane paints are flammable and toxic. Good general ventilation is normally adequate. Skin and eye protection is required. Avoid all sources of ignition.

2.22.1 Finish Coats. There are several types of finish coats applied at both the OEM and field levels such as: acrylic enamel and polyurethane, high solid polyurethane, two and three part clear coat systems, etc. Where possible, organizations shall use the same type of coating system for touchup and repaint applications as was applied by the OEM. If the finish system is totally removed and the OEM coating system is not feasible for field applications, or operational needs dictate coating changes, 580 CBSS/GBL, in coordination with the MAJCOM vehicle manager shall provide finish system requirements.

2.22.2 Simonizing, waxing, or polishing of USAF vehicles by commercial contract is authorized only when in-house cost exceeds cost of obtaining like service through commercial resources. The waxing and polishing of USAF vehicles in accordance with good commercial practice will be left to the discretion of the Installation Commander. This work will be closely monitored to insure that proper material and/or procedures are utilized.

2.22.3 Repainted vehicles shall bear a temporary notice, affixed to the dash panel, reflecting “DO NOT POLISH, OR WASH WITH DETERGENTS BEFORE (enter date). WASH AS OFTEN AS NECESSARY WITH WATER ONLY”. (The time element will coincide with the paint manufacturer’s recommendation.)

2.22.4 The painted finish of garnish moldings and instrument panels of the interiors of sedans will not be painted if the finish is serviceable and if restoration to original condition can be accomplished by cleaning and applying wax compound.

2.22.5 Chemical Agent Resistant Coating (CARC) Paints.

2.22.5.1 CARC finish is not generally required and will not be specified for the majority of Air Force acquisitions. Where CARC is essential to a user’s mission, CARC will be specified. MAJCOM or WR-ALC may challenge a user’s stated need for CARC, and where validated, will then approve its use.

2.22.5.2 Air Force will accept CARC painted vehicles procured through TACOM when it would add cost to the Air Force procurement to deviate from CARC finishing, regardless of user’s need.

2.22.5.3 Owning units will maintain the CARC finish for vehicles where CARC need has been validated. For all others, units may either maintain the CARC finish or refinish with non-CARC polyurethane or enamel paint when refinishing becomes necessary.

2.22.5.3.1 Where CARC has been validated the preferred replacement material is Chemical Agent Resistant Aliphatic Polyurethane, Water Dispersible, MIL-DTL-64159

2.22.5.3.2 This specification covers water dispersible, chemical agent resistant (CARC) aliphatic polyurethane coating system that may be used on CARC coated equipment as an alternative to the solvent borne CARC coating, MIL-C-53039B.

2.22.5.3.3 This coating provides outstanding corrosion protection and maintains the required spectral and color reflectance required of all approved CARC coatings.

2.22.5.3.4 MIL-DTL-64159 is supplied in colors Green 34094, Aircraft Green 34031, Brown 30051, Tan 33446, Black 37030, Gray 36300. The coating is not currently stock listed. Organization wishing to requisition this material will find manufacturer’s part numbers and authorized manufacturer’s listed on Qualified Product List (QPL), QPL-64159. The current QPL may be found at the following website http://assist1.daps.dla.mil/quicksearch/.

2.22.5.3.5 MIL-DTL-64159 may have an extended curing time in humid areas. Additionally, specialized application equipment may be required. As the coating application requirements may vary between manufacturers, contact the appropriate MIL-DTL-64159 vendor customer service representative, listed in the QPL, for application details for their specific coating application requirements.

2.22.5.4 When CARC paint is used as a vehicle finish, stencil the letters “CARC” in close proximity of the vehicle’s data plate. CARC will be applied in accordance with TO 36-1-161 and TO 36–1–171.

2.23 NON-SLIP MATERIALS.

Non-slip fabric or walkway compound may be applied to stepping, standing, and walking surfaces of vehicles to eliminate potential safety hazards.

2.24 HVLP SPRAY GUN PROCEDURES.

2.24.1 High Volume Low Pressure (HVLP) paint spray guns shall be used as a means of keeping paint overspray to a minimum and to conform to federal, state, and local environmental requirements. Refer to TO 1-1-8, Chapter 4, for more complete guidance on the operations and maintenance of HVLP paint spray equipment.

2.24.2 To obtain the best results when spray painting, the gun should be held perpendicular to the work at all times and approximately 8 to 10 inches from the surface. The proper stroke is made with a free arm motion, keeping the face of the air cap parallel with the surface at all points on the stroke. The ends of the stream are feathered out by beginning the stroke before pulling the trigger of the gun and releasing the trigger just before ending the stroke. Avoid arcing the gun during the stroke to prevent uneven application and excessive overspray at the end of the stroke in accordance with TO 1-1-8, Chapter 4.

2.24.3 Adjust gun to operate at maximum speed consistent with material, rate of flow, surface, and individual skill.

2.25 MARKINGS.

The policy governing authorization of identification markings or exemption thereto is contained in AFI 23-302.

2.25.1 Vehicles procured for Air Force use will be received from the manufacturer without official markings (i.e., US Air Force, For Official Use Only, and registration number). Air Force vehicle management shops will mark vehicles using standard AF license plates (Figure 2-1) on the rear of each vehicle where a license plate's installation is practical. Two license plates (front and rear) are authorized if required by MAJCOM or local law.

2.25.1.1 Plates are available through UNICOR Federal prison industries in three colors and will contain necessary information as outlined in this technical order.

2.25.1.2 To accommodate the Federal Fleet (FEDFLEET) Council's more stringent security measures, UNICOR is prohibited from selling license plates to anyone (by name) not on an approved-to-purchase list; however, the FEDFLEET Council will allow Air Force units an exemption by allowing AF units to order plates under the unit's designation with an official mailing address.

2.25.1.3 UNICOR/AMERIMAC will not accept orders by non-AF designated units. UNICOR/AMERIMAC will provide AFELM VEMSO an e-mail copy of all orders placed. Additionally, VEMSO will periodically review and provide a list of all registered buyers to the respective MAJCOMs. Each MAJCOM must validate all of their registered units. Additionally, new registrations or changes to registrations must be processed through each respective MAJCOM for validation and forwarding for VEMSO approval. Only then will the registration be forwarded to UNICOR/AMERIMAC.

2.25.1.4 Units will have the option of ordering plates with the registration number preprinted or purchasing blank plates and applying the registration number as specified in this technical order regardless of which method units use to purchase the plates, all license plates will be appropriately controlled and kept secured when awaiting installation.

NOTE

Due to printing processes, the preprinted plates may have larger lettering.

2.25.1.5 Vehicle fleet managers will publish an Operating Instruction (OI) to ensure procedures are in place to control the plates throughout the order process; (order, receipt, installation, reuse and removal/destruction of plates on DRMS bound vehicles). The OI must also include procedures for notifying local authorities (SF and OSI) when plates are lost or stolen, and provide procedures for keeping a record of lost and stolen plates. Reused plates must have the registration number removed when the plate is taken from its original vehicle before storing for future use. When a vehicle is shipped or transferred to another base or deployed location, the license plate will be removed and placed inside the vehicle record jacket, inside a sealed envelope. A placard or protected paper with the registration number printed in large numbers will be posted/secured inside the vehicle window/windshield. When shipping a vehicle to a depot contractor for rebuild, remove the license plate and place it in the vehicle historical file for reinstallation upon the vehicles return. A placard or protected paper with the registration number printed in large numbers will be posted/secured inside the vehicle window/windshield. When shipping or transferring a vehicle to a sister service or through the Military Assistance Program (MAP) the plates will be removed from the vehicle and reused or destroyed. A placard or protected paper with the registration number printed in large numbers will be posted/secured inside the vehicle window/windshield.

2.25.2 Major Commands have the option for the use of license plates on vehicles with "D" registration numbers (graders, front-end loaders, etc.) and "E" registration numbers (K-loaders, forklifts, etc.). Commands not choosing to use license plates must mark these vehicles using die-cut letters/numbers or by stenciling using specification and placement requirements contained in this technical order. Standardized license plates will be used on all other classes of Air Force vehicles.

2.25.2.1 The new license plates will only be used on Air Force vehicles and equipment maintained and tracked by vehicle management and government furnished equipment owned by the Air Force and managed under property clause of the FAR by a contractor. Non-appropriated vehicles will be marked according to their own functional area's guidance and will be visually distinct to preclude confusion with AF appropriated vehicles. LSVs not maintained by Vehicle Management will not use "official" Air Force license plates.

2.25.3 As required by the Federal Acquisition Regulation (FAR), the only approved license plate for use on AF vehicles is produced at:

UNICOR/Amerimac, Ltd
33W480 Fabyan Parkway
Suite 105
West Chicago, IL 60185

Telephone Number (630) 444-1111
Fax Number (630) 444-1118
E-mail: info@amerimac.net

These plates will be mandatory for all AF owned vehicles as specified below. Appropriate control measures are required to prevent theft or pilferage of uninstalled plates. Report all instances of lost or stolen license plates, whether installed or from stock, to local security forces investigations section. Units will be required to identify themselves to UNICOR when placing orders by their unit designation, base and location (e.g., 90 LRS/LGRV, F.E. Warren AFB, WY 82005). These plates will not be installed on contract owned or Non Appropriated Fund (NAF) vehicles. Commercial vehicles leased longer than 60 days, (other than GSA leased vehicles) are authorized the AF license plate with MAJCOM concurrence.

2.25.3.1 Part number AF-1, a white plate with blue numbers/letters, for use on all blue vehicles, law enforcement sedans, van/modular type ambulances (painted white) red fire fighting vehicles and commercial colored vehicles.

2.25.3.2 Part number AF-2, an olive drab plate with black numbers/letters, for use on all olive drab, camouflage, yellow, green and lime yellow colored vehicles.

2.25.3.3 Part number AF-3, a desert sand plate with black numbers/letters, for use on all desert sand colored vehicles.

2.25.3.4 The vehicle registration number will be affixed (if not ordered preprinted) centered on the license. All die cut letters and numbers will be Highway Gothic, 1-1/2 inches. Units also have the option to purchase the die cut letters and numbers from UNICOR. Units will use one rear license plate, or may use two license plates if directed by the MAJCOM or local law. Existing license plates will be replaced with the new style plates only if they are damaged. All AF vehicles will either have an approved AF license plate or will be marked in accordance with Paragraph 2.40.2.

2.25.3.5 Commands/units will not place logos on emblems on the license plate.

2.25.3.6 Air Force vehicles in the inventory prior to January 1992, with markings displayed on the side and rear of the vehicles, will retain those markings as specified in this technical order until the vehicle is removed from the Air Force inventory. Vehicles that require complete repainting or returned from depot will be marked with license plates when appropriate. All other applicable markings will be applied as specified in this technical order. For vehicles without appropriate mounting brackets, brackets must be manufactured or procured locally.

2.26 ACTIVITY MARKINGS.

The markings prescribed in this Technical Order provide a uniform method of identifying vehicles as property of the USAF and serve to associate such property with the organization to which it is assigned. MARKINGS WILL NOT BE PLACED ON VEHICLES EXCEPT AS AUTHORIZED BY THIS TECHNICAL ORDER.

2.26.1 Special activity markings and radio call signs may be used on certain vehicles which have not been otherwise specified in this TO when such markings are deemed mission essential, in writing, by the installation commander. In the event a mutual aid agreement/memorandum of understanding entered into and approved by the installation commander between the installation and local municipality, county, state, or federal response plan warrant special activity markings/radio call signs, these will be submitted by the owning unit with justification through Vehicle Management for approval. Any such markings should be simple to apply and easy to remove without damaging the vehicle exterior surfaces and finish. Logos, base names, organizational patches, insignias, or other markings are not authorized.

2.26.2 All activity identification markings for all other vehicles may be applied by use of a locally fabricated plate, approximately 6 inches x 12 inches, to be attached to the front license plate holder. All activity markings or insignias will be designed, furnished, and installed by the using organization and must be readily removable to facilitate rotation of vehicles between using activities. Changing to new markings will be performed when replacement is required due to damage or deterioration.

2.26.3 Mark contaminated vehicles in accordance with Counter Chemical/Biological Warfare CONOPS. Due to the hazards embedded in nuclear, biological or chemically contaminated vehicles, all vehicle operators and maintainers must conspicuously identify and mark contaminated assets in accordance with AFMAN 10-2602, NBCC Defense Operations and Standards.

2.27 ADDITIONS OR DEVIATIONS.

Vehicles may be required to bear all markings described in this Technical Order or only a portion of those described, depending upon the type of vehicle, its mission, and the safety factors involved. Where required by civil law, major command or theater commanders may make additions to or deviations from the markings prescribed herein. The extent

of such additions or deviations will be held to an absolute minimum and will be consistent with safe practice.

2.28 REQUIREMENTS.

Markings will be clearly maintained on all vehicles at all times except as follows:

2.28.1 Upon transfer within the USAF, all organization markings shall be removed.

2.28.2 Upon permanent transfer to DRMS, all Air Force markings including USAF registration numbers shall be obliterated or removed. Data plates showing chassis and engine serial numbers shall not be removed.

2.28.3 Upon transfer to Military Assistance Program (MAP), all Air Force markings shall be removed.

2.29 CAMOUFLAGE.

When the requirements for camouflage or concealment outweigh the requirement for identification, the markings prescribed herein may, by direction of the major command concerned, be obliterated with some readily available removal substance.

NOTE

This guidance takes precedence over TO 36-1-161 or TO 36-1-171.

2.30 SPECIFICATIONS.

Markings for all vehicles except those in Paragraph 2.10 will be accomplished by applying reverse or direct silk screened reflectorized tape and die cut prespaced letters and numbers conforming to ASTM-D4956, Sheets, Class 3, Type 1, using the following colors:

2.30.1 Reflective red background with reflective silver letters on red, yellow, white, or gray surfaces conforming to ASTM-D4956, Sheets, Class 3, Type 1, color J.

2.30.2 Die cut prespaced reflective black letters and numbers on white surfaces for metropolitan van and modular type emergency ambulances only shall conform ASTM-D4956, Sheets, Class 1, color black with Type VI candle power (CP) or less.

NOTE

All die cut prespaced letters and numbers will comply with Gothic style, Bureau of Public Roads Standards, Series C.

2.30.3 Reflective red background with reflective silver letters on red, yellow, white, or grey surfaces conforming to ASTM-D4956, Sheets, Class 3, Type 1, color J.

2.30.4 Die cut prespaced reflective black letters and numbers on white surfaces for metropolitan van and modular type emergency ambulances only shall conform to ASTM-D4956, Type 1, Class 1, color black with Reflectivity 10 candle power (CP) or less.

NOTE

All die cut prespaced letters and numbers will comply with Gothic style, Bureau of Public Roads Standards, Series C.

2.31 SEMI-GLOSS DARK GREEN.

Vehicles dark green color number 24052 will be stenciled using paint black lusterless, color number 37038. Danger markings may be applied using paint, red lusterless, color number 31136.

2.32 MARKING REQUIREMENTS FOR VEHICLES USED ON LANDING AREAS.

2.32.1 Vehicles which operate primarily, on the apron and taxiways painted dark green or olive drab; i.e., fire trucks, fuel servicing trucks, A/S32A-2 water truck, 463L and ground support equipment will be marked with silver reflectorized tape. This vehicular equipment will be highlighted to indicate length, width, and height using silver reflective tape conforming to ASTM-D4956, Rolls, Class 3, Type 1, color G. The tape will be applied in 2-inch wide strips, 8 to 12 inches long as illustrated in Figure 2-7, Figure 2-23, and Figure 2-29.

NOTE

Use Figure 2-7, Figure 2-23, and Figure 2-29 as a guide for marking all vehicles where highlighting is required.

2.32.2 All other vehicles operating primarily on the apron and taxiways, excluding general purpose vehicles will be marked as follows:

2.32.2.1 Reflective tape markings.

2.32.2.2 Clearance lights.

2.32.2.3 Hazard warning lights (four-way flashers) as required by the Department of Transportation.

2.32.2.4 Non-revolving pulsating type light of aviation yellow as specified in SAE-AS25050.

2.32.2.5 Revolving flasher type light of aviation red or blue as specified in SAE-AS25050.

NOTE

Prescribed lighting requirements begin in Paragraph 2.93 of this technical order. General purpose vehicles (i.e., sedans, station wagons, multi-step panels, pickup trucks, buses, etc.) will not be outlined in reflectorized tape.

2.32.3 Harness Required Area. A 3-inch wide yellow line painted on both catwalks of the loaders is required. Lines will be painted at the following locations.

25K- AT THE LAST PALLET LOCK, NGSL-AT THE SECOND TO LAST PALLET LOCK
40K- AT THE SECOND TO LAST PALLET LOCK
60K- AT THE LAST PALLET LOCK

a. Stencil the words "HARNESS REQUIRED AREA" next to the yellow line on the side nearest the end of the loader catwalk using 1-3/4-inch high yellow block letters.

b. Identify the following loader tie-down rings as a fall restraint attaching point by painting them yellow:

25K-SECOND TO LAST T/D RING ON THE GUIDE RAIL
25K-NGSL-SECOND TO LAST T/D RING ON THE GUIDE RAIL (drivers side), THIRD TO LAST T/D RING ON THE GUIDE RAIL (non drivers side)
40K-SECOND TO LAST T/D RING ON THE GUIDE RAIL
60K-SECOND TO LAST T/D RING ON THE GUIDE RAIL

c. Paint the inside of both front and rear emergency pallet stops on the 25K, 40K, NGSL, and 60K yellow.

2.33 IDENTIFICATION MARKINGS.

The term identification includes the following:

2.33.1 Agency Identification. US AIR FORCE

2.33.2 USAF Registration Number

2.33.3 Official Use Only

2.34 NATIONAL SYMBOL AND INTERNATIONAL MARKINGS.

2.34.1 National Symbol. The national symbol may be applied to all vehicles operated by the USAF in overseas theaters, by direction of the Theater Commander concerned. Size and location are prescribed in Paragraph 2.41.

2.34.2 International Markings. Where required by NATO, SEATO, CENTO, etc., agreements, Air Force vehicles will contain the markings prescribed in those standards that have been ratified by the US Commands having jurisdiction over military activities in the NATO, SEATO, CENTO, etc. Areas will ensure compliance with the provisions of the international agreements unless otherwise instructed by Headquarters USAF.

2.35 TACTICAL MARKINGS.

Tactical markings are authorized only on vehicles assigned to tactical units and shall be removed when vehicles are transferred from jurisdiction of the commander prescribing their use. Tactical vehicle markings are prescribed in MIL-STD-642L.

2.36 CONCEALED MARKINGS.

2.36.1 All U.S. Air Force and U.S. Government identification markings shall be concealed in unmarked OSI vehicles. The vehicle nomenclature/data plate may be mounted inside glove boxes that can be locked or inside the trunk compartment. If the vehicle registration number and serial number are not reflected on the data plate they will be stenciled inside the trunk lid.

2.36.2 MAJCOM Commanders may designate additional requirements for concealed markings due to terrorist threats. Exemptions are for motor vehicles assigned to key military personnel in positions vulnerable to terrorist attacks when conspicuous identification will endanger their security or that of the U.S. Government.

2.37 DECALCOMANIA.

Decalcomanias, used to reflect conversion of miles per hour to kilometers per hour, tower signals for control of airdrome traffic, non-reflectorized red cross decals, and all other non-reflectorized markings will be manufactured from material conforming to MIL-M-43719, Type II, Class I.

2.38 SPECIAL MARKINGS.

Special markings, i.e., no smoking signs, fluid identification, will be applied as specified beginning in Paragraph 2.45.

2.39 SIZE OF MARKINGS.

The size of the letters and numerals to be used in accomplishing vehicle markings are as follows:

2.39.1 "US AIR FORCE" 1-1/2 inch

2.39.2 Registration Number 1-1/2 inch

2.39.3 "FOR OFFICIAL USE ONLY" 3/4 inch

2.39.4 The size of all other markings is included in the paragraph pertaining to the specific marking involved.

NOTE

Present stocks of reflective marking material will be used prior to ordering new sizes.

2.40 LOCATION OF VEHICLE IDENTIFICATION MARKINGS.

2.40.1 When AF license plates are used, refer to Paragraph 2.28.

2.40.2 When AF license plates are not used, the following procedures will be adhered to.

2.40.2.1 Vehicle identification on the sides and the rear of vehicles will consist of "US AIR FORCE" and "registration number", and are placed as follows:

2.40.2.2 On most vehicles, center the identification markings on each front door or in a comparable position in relation to the operator's seat on vehicles without doors.

2.40.2.3 On trailers and semi-trailers, the identification markings will be centered vertically on each side of the front quarter of the vehicle.

2.40.2.4 The location of identification on the rear of the vehicle is not prescribed due to the various types of design characteristics involved. The location and arrangement of identification, however, will be such that it will not be exposed to excessive abrasive action under normal operation and so that the vehicle may be easily identified from the rear. If space does not permit, the agency identification will be omitted. Markings will be uniform on like type vehicles.

2.40.2.5 Due to the various types of materials handling equipment, the exact location for identification is not specified. These markings will be applied using Figure 2-6.

2.40.2.6 Identification markings on tractors will be applied as follows:

2.40.2.6.1 On industrial and agricultural tractors, "US AIR FORCE" and the "registration number" on both sides of the hood.

2.40.2.6.2 On crawler tractors, excavators, and the like, "US AIR FORCE" and the "registration number" on two lines, on sides and rear of seat, leaving 1 inch between lines.

2.40.2.6.3 On crawler tractors place "US AIR FORCE" and the registration number on two lines, on sides, and rear of seat, 1 inch between lines. If space does not permit markings on the seat sides, place "USAF" and the registration number on one line on both sides of the hood.

2.40.2.6.4 Location of all other markings is included in the paragraph pertaining to the specific marking involved.

2.41 NATIONAL SYMBOL.

2.41.1 A white, five pointed star is prescribed as the national symbol. This symbol will be applied on vehicles assigned to units in overseas operations when directed by the Theater Commander.

2.41.2 The size of the national symbol will vary considerably, depending on the type vehicle concerned. It should be large enough to take full advantage of the surface on which it appears and should use the largest clearly visible space.

2.41.3 When used, the national symbol will be applied to the hood and on both sides of vehicles using lusterless white paint, color number 37875, or nonreflective decals. On horizontal surfaces, the star will be placed so that one of the five points is directed toward the rear of the vehicle. On vertical or nearly vertical surfaces, one of the five points is directed up.

2.41.4 The national symbol will not be used on vehicles operated in the continental United States.

2.42 AIR NATIONAL GUARD (ANG) VEHICLES.

Additional marking for ANG vehicles may consist of using a plate (same size as a license plate) to identified unit(s) vehicles. Units can put an additional front plate on the vehicle which will not replace the requirement for two license plates on the vehicle if state law requires it or MAJCOM. The plate may consist of these elements: Minuteman Decal or Unit Decal, along with these lines, 1. "ANG", 2. Unit Identifier "105AW", 3. City and State "Stewart, N.Y." Which translates to:

ANG
105AW
Stewart, NY

2.43 RESERVE OFFICERS' TRAINING CORPS VEHICLES.

Markings for vehicles assigned to the Air Force ROTC consist of two groups: (1) initials "ROTC", and (2) abbreviation of the institution to which the vehicle is assigned. EXAMPLE: ROTC-USC-USAF, Reserve Officers' Training Corps, University of Southern California.

2.44 DECALCOMANIAS.

2.44.1 Decal KPH to MPH. A decal for converting kilometers per hour to miles per hour will be used on military vehicles operating out of the United States when this conversion is not shown on the speedometer. Place the decal on the instrument panel, in easy view of the operator.

SAMPLE:

KPH	MPH	KPH	MPH
20	12	70	44
30	19	80	50
40	25	90	56
50	31	100	62
60	37	110	68

2.44.2 Decal Tower Signals or Control of Airdrome Traffic. A decal, sample copy below, shall be applied to the dash panel or header above the windshield in easy view of the operator in both GSA and GOV vehicles that travel on the flightline.

SAMPLE

TOWER SIGNAL FOR CONTROL OF AIRDROME TRAFFIC

STEADY GREEN CLEARED TO CROSS

STEADY RED STOP

FLASHING RED CLEAR THE ACTIVE RUNWAY

FLASHING WHITE RETURN TO STARTING POINT

RED AND GREEN GENERAL, EXERCISE EXTREME CAUTION

2.44.3 Decal NHTSA Warning Label for 15 Passenger Vans. National Highway Traffic Safety Administration has issued increased roll-over risk for 15 passenger vans with 10 or more occupants have three times the rollover ratio than those with fewer than 10 occupants. Sudden vehicle maneuvers could increase the propensity to roll over.

2.44.4 Additional Decals. Any additional informational or instructional type decals deemed necessary, i.e., booster battery cable hookup, DIESEL FUEL, UNLEADED FUEL identification may be applied at the discretion of the Logistics Readiness Squadron Commander or equivalent.

NOTE

Decals installed inside vehicles may be removed if written approval is obtained from the base-level Safety Office and Wing Commander. Written approval for decal removal will be maintained in vehicle operations for reference purposes.

2.45 SPECIAL MARKINGS.

Special markings prescribed herein are in addition to vehicle markings described in the preceding paragraphs unless otherwise specified.

NOTE

The sizes of the letters and numbers will comply with the specifications given in the remaining paragraphs of this chapter.

2.46 VEHICLES USED IN TRANSPORTING SICK AND INJURED.

Vehicles used in transporting sick and injured will be marked according to Paragraph 2.48 through Paragraph 2.52 and as illustrated in Figure 2-2 through Figure 2-4. All red and orange cross emblems will be premasked with a low tack translucent carrier tape.

NOTE

Where theater commanders are aware that the orange/red crosses are offensive to the populace in which these ambulances must operate, they may elect not to use the crosses. Instead these commanders shall require the use of markings appropriate to the country where they are used.

2.47 AUTOMOBILE, AMBULANCE (METROPOLITAN).

2.47.1 A premasked reflectorized decal with a 3-inch Omaha orange cross on a 2-inch square white field shall be applied 1 inch above the left and right corners of the windshield.

2.47.2 A premasked reflectorized decal with a 6-inch Omaha orange cross on an 8-inch square white field shall be applied on the center of the rear door panel directly below the 6 inch orange stripe. The legend "AMBULANCE" in 3-inch black reflective letters shall be applied immediately below the cross. If space is not adequate, two reflective decals with 3-inch Omaha orange crosses on a 2-inch square white field may be applied on each side of the door above the window. The legend "AMBULANCE" in 3-inch black reflective letters shall be centered between the two crosses.

2.47.3 A premasked reflectorized decal with a 6-inch Omaha orange cross will be applied on the rear side window on each side of the vehicle. The word “AMBULANCE” in 3-inch black reflective letters shall be applied directly below the cross.

2.47.4 A premasked reflectorized decal with an 18-inch Omaha orange cross on a 22-inch square white field shall be applied on the roof in a central location.

2.47.5 The legend “AMBULANCE” in mirror (reversed) image shall be centered approximately 1 inch from top of windshield using 1-1/2-inch reflective letters.

2.47.6 An orange stripe, not less than 6 inches, nor more than 14 inches wide shall encircle the entire ambulance body at the belt-line below the bottom edge of cab windows, but may exclude the front of the hood panel. The material for striping shall be reflectorized to ASTM-D4956, Sheets, Class 1 or 3, Type 1.

NOTE

Decals will not be replaced solely to comply with this TO. Compliance with this TO will be accomplished, as decals require replacement.

2.48 AMBULANCE (VAN/MODULAR TYPE COMMERCIAL, 4 × 2 AND 4 × 4 PAINTED WHITE).

2.48.1 The legend “AMBULANCE” in block blue letters not less than 4 inches high, shall be mirror image, centered above the grill on the orange or white background.

2.48.2 Block type blue “STAR OF LIFE” not less than 3 inches on a 4-inch white field located both to the right and left of the legend “AMBULANCE” (mirror image) above the grill.

2.48.3 The legend “AMBULANCE” in block blue letters on a white field not less than 6 inches in height shall be centered between “STAR OF LIFE” and red cross on each side of vehicle.

2.48.4 A block type blue “STAR OF LIFE” not less than 16 inches shall be on the right and left side panels. A block type blue “STAR OF LIFE” not less than 12 inches shall be centered between upper and lower windows of each rear door.

2.48.5 A premasked red cross on a white field not less than 16 inches shall be on the right and left side panels. A premasked 6-inch red cross on an 8-inch white field shall be on the lower portion of each rear door. The legend “AMBULANCE” in block type blue letters on a white field not less than 4 inches in height shall be centered between the red crosses on the rear doors.

2.48.6 The roof marking shall consist of a premasked 36 × 36-inch red cross on a 42 × 42-inch white field centrally located on the roof panel.

NOTE

Decals will not be replaced solely to comply with this TO. Compliance with this TO will be accomplished as decals require replacement.

2.48.7 An orange stripe, not less than 6 inches, nor more than 14 inches wide shall encircle the entire ambulance body at the belt-line below the bottom edge of cab windows, but may exclude the front of the hood panel. The material for striping shall be reflectorized to ASTM-D4956, Sheets, Class 1 or 3, Type 1. (Then follow on with the NOTE about the decals.)

2.49 AMBULANCE (VAN/MODULAR) 4 × 2 AND 4 × 4 PAINTED SEMI-GLOSS GREEN.

2.49.1 The legend “AMBULANCE” in mirror image in 3-inch reflectorized black letters shall be applied on the front center of the hood.

2.49.2 Two reflectorized decals with a 2-inch red cross on a 3-inch square white field will be placed one on each side of the word “AMBULANCE” approximately 6 inches from the first and last letters.

2.49.3 The side markings shall consist of the word “AMBULANCE” in 3-inch black reflectorized letters centered on the side of the body underneath the centered reflectorized decal with an 18-inch red cross on a 22-inch square white field.

2.49.4 A premasked 4-inch red cross on a 4-inch white field shall be on the lower portion of each rear door. The legend “AMBULANCE” in block-type blue letters, on a white field, not less than 4 inches in height shall be centered between the red crosses on the rear doors.

2.49.5 The roof markings shall consist of a reflectorized decal with an 18-inch red cross on a 22-inch square white field centrally located on the roof panel.

2.50 BUS, 44 PASSENGER, CONVERTIBLE (MULTILITTER).

2.50.1 The marking "AMBULANCE", 3-inch high direct prespaced, silver reflective letters will be centered in the routing view box above the windshield.

2.50.2 A premasked reflectorized decal with a 36-inch red cross on a 48-inch square white field will be applied on each side of the vehicle below the windows in a central location.

NOTE

Decals that cannot be applied as described above due to body style; uneven or ribbed surfaces, etc., may be applied to an appropriate sized aluminum plate and affixed to the vehicle with aluminum or stainless steel bolts. Permission must be obtained from GSA before any modification to one of their vehicles can be made.

2.50.3 A premasked reflectorized decal with an 18-inch red cross on a 22-inch square white field will be applied on the rear of the bus in a central location.

2.51 AUTOMOBILE, STATION WAGON.

Station wagons which have been converted for use in lieu of metropolitan ambulances by installation of wheel litter attachments will be marked as follows:

2.51.1 A premasked reflectorized decal with an 8-inch red cross on a 10-3/4-inch square white field will be applied to the center of each rear side door.

2.51.2 A premasked reflectorized decal with a 6-inch red cross on an 8-inch square white field will be applied on the center of the tailgate. If space is inadequate for the single large decal, two reflectorized decals with a 8-inch red cross on a 2-inch square field will be applied to the upper corners of the tailgate immediately below the rear window of the vehicle.

2.52 MOBILE MEDICAL VANS.

Special purpose semi-trailers used as mobile dispensaries, dental clinics, and other primary medical functions, will be marked as follows:

2.52.1 A premasked reflectorized decal with a 36-inch red cross on a 48-inch square white field will be applied on the right and left, front and rear external panels in a central position.

2.52.2 A premasked non-reflectorized decal with a 36-inch red cross on a 48-inch square white field will be applied to the roof in a central location.

2.53 RECRUITING VEHICLES.

Markings for Air Force vehicles assigned to recruiting service are as follows:

2.53.1 Emblem will be reflectorized decalcomania, 12 inches in diameter.

2.53.2 The emblem will be centered horizontally 6 inches below the top of the front door panel. Emblems that cannot be placed as described above due to varying body styles, will be applied to vehicles as determined by instructions issued by the Commander of the USAF Recruiting Service.

2.53.3 Recruiting decalcomanias will be centrally procured by Headquarters, USAF Recruiting Service, Randolph Air Force Base, Texas.

2.54 COMMUNICATIONS AND GROUND CONTROL APPROACH VEHICLES.

Bodies of van type vehicles, and those vehicular types which are components of AGE sets/systems containing communications and ground control approach equipment, and located or operated on landing areas, runways, or taxiways, will be painted with the Conventional "checkerboard" markings on alternate blocks of Aviation orange and white. The size of the checkerboard blocks will be such that there will be not less than four, nor more than six longitudinal rows. This pattern of marking will be applied to the antenna housing, roof, sides, rear and frontal area which is unobstructed by the vehicular cab. Chassis and cabs will be painted yellow, color number 13538. All van type radar and flight control sets having rotating search antennas mounted on the hood will have a circular 3-inch wide strip of red reflectorized tape, conforming to ASTM-D4956, applied just outside the area covered by the antenna during rotation. The following statement will be stenciled, using a contrasting color enamel, just outside this area in such a position that it can be read by personnel approaching the area from the mounted ladder.

WARNING

Search reflector scan area. Ensure that safety switch S-134045 is in safe position before entering this area.

2.55 TRACTORS AND FORKLIFTS.

2.55.1 Tractors, other than truck-tractors and aircraft towing tractors, will be marked using Figure 2-6 and Figure 2-8 as a guide.

2.55.2 Forklifts will be marked using Figure 2-30 as a guide.

2.56 TIRE SIZE/TYPE AND INFLATION PRESSURE.

2.56.1 The manufacturer's recommended operating tire size and ply and/or rating in addition to the recommended operating tire pressure will be stenciled in the area of the left door on adjacent to either the front or rear door pillar post of vehicles so equipped. This instruction will not be applied to those vehicles equipped with a label on which the manufacturer's recommended operating tire size and ply and/or rating and operating tire pressure is embossed.

2.56.2 On other type vehicles, the operating tire size and ply and/or rating in addition to the recommended operating tire pressure will be stenciled on the shield, panel, or frame immediately adjacent to the left front tire. If rear tires have a different manufacturer's recommended operating tire size and ply and/or rating and/or pressure, this will be stenciled adjacent to left rear tire.

2.56.3 Size of letters and numbers will be 1/2 inch high and they will be of a contrasting color. If there is a tone down requirement the color will be black lusterless.

NOTE

The tire pressure embossed on a label or stenciled on the vehicle represents normal usage pressures for which the vehicle was primarily designed. If vehicle is to be used for loads other than the normal, the correct operating tire pressure must be established using guidelines contained in Chapter 4. Abbreviate the words "Tire Pressure", Example, T.P.70. An appropriately sized, locally made data plate may be used in lieu of stencil or if manufacturer's data plate is illegible.

2.56.4 Nitrogen filled tires. Stencil "Nitrogen filled tires do not service" to each fender well and each inner rim near the valve stem, on vehicles equipped with nitrogen filled tires.

2.57 SCHOOL BUS SAFETY MARKINGS.

The variation in state law requirements for special markings for special types of vehicles prohibits the establishment of uniform instructions for this class of markings in detailed form. Safety markings for school buses will be applied to conform to local state regulations. Distinctive colors may be applied to the complete vehicle when required by state regulation. When state laws do not prescribe school bus safety markings, the provisions of this section will be considered minimum requirements.

2.58 DOT MOTOR CARRIER SAFETY REGULATION MARKINGS.

Vehicles transporting explosives or other dangerous material off base will be marked in accordance with DOT Regulations (49 CFR 172.504). The variation in safety and/or special marking requirements of foreign nations prohibits the establishment of uniform instructions in detail form. Therefore, safety markings as required and conforming with local laws of the host country and the provisions of any international agreement will apply. Trailers with an overall width of 2032 mm (80 inches) or more and a gross vehicle weight of 4436 kg (10,001 pounds) or more will be marked in accordance with DOT code of federal regulation (49 CFR 393.13). The requirement for bilingual stenciling of safety markings will be at the discretion of the major command.

2.58.1 The chart in Table 2-1 gives examples of the DOT marking requirements for some common substances. See Figure 2-28 for an example of the marking of a liquid nitrogen trailer. Local and/or state laws may also be applicable; therefore, local authorities should be contacted about requirements for transporting hazardous materials.

NOTE

The requirements of federal, state, or local laws are not superseded by any requirement of this TO unless covered by an exemption.

2.59 FUEL DISPENSING AND AIRCRAFT SERVICING VEHICLES.

Refer to Figure 2-10, Figure 2-11, and Figure 2-23 for marking and highlighting of R-9/11 aircraft refuelers and fuel servicing vehicles i.e., C-300, A1B. Markings may be decals or stencils, using red paint color number 31136. Aircraft refuelers shall be marked in accordance with 49 CFR 172.302, National Fire Protection Association (NFPA) standard 407 as referenced below. Local and/or state laws may also be applicable; therefore, local authorities shall be contacted about requirements for transporting hazardous materials.

2.59.1 “FLAMMABLE” 4 or 6-inch red letters, depending on availability of space.

2.59.2 “NO SMOKING WITHIN 50 FEET” 4 or 6-inch red letters, depending on availability of space.

2.59.3 “CARGO FIRE-AVOID WATER” 2-inch red letters.

2.59.4 “JET FUEL PRODUCT” 4 or 6-inch red letters, depending on availability of space.

2.59.5 “EMERGENCY TANK SHUTOFF” 2-inch red letters.

2.60 NO SMOKING WITHIN FIFTY FEET.

For vehicles described below which store/transport flammable materials. Markings may be decals or stencils, using red paint color number 31136.

2.60.1 On semi-trailers, “NO SMOKING WITHIN 50 FT” in 2-inch red letters shall be applied. Refer to Figure 2-27.

2.60.2 On fuel or oil servicing trucks, “NO SMOKING WITHIN 50 FT” in 2-inch red letters. Refer to Figure 2-11.

2.60.3 Two-wheeled trailers will be marked on each side of the tank with “NO SMOKING WITHIN 50 FT” in 3-inch red letters.

2.61 PRODUCT IDENTIFICATION.

2.61.1 Place the word “AVGAS,” “JET FUEL,” “OIL ACFT ENG,” “DIESEL FUEL,” “KEROSENE,” “MOGAS, ” whichever is applicable, on the rear and both sides of tank. Markings may be decals or stencils, using red paint color number 31136. “AVGAS 115/145 F22” will be applied in silver reflective letters with a purple background. “JET FUEL JP4 or JP8” and all other markings will be applied using decals or stencils, using red paint color number 31136. Use 6-inch letters on all semitrailers and trucks with a capacity of 1,500 gallons or more, 2-inch letters on trucks with less than 1,500 gallons capacity and 3-inch letters on two-wheel trailers.

2.61.2 Numerals identifying the grade of gasoline or type of oil will be added immediately after the word AVGAS or OIL in sizes prescribed for letters in the preceding paragraph. Example: AVGAS115/145, Oil-Type II, SAE-J1899, or JET FUEL-JP4. Bio-Diesel will be marked as “Diesel Fuel BDI.”

2.61.3 When converting a unit from one type product to a different type product, all markings will be changed to correspond with the product to be dispensed.

2.61.4 The appropriate NATO symbol, as outlined in TO 42B1-1-15, will be applied to each side of aviation fuel and oil servicing vehicles immediately below the product identification. The appropriate NATO symbol shall also be applied to the rear of aviation fuel and oil servicing vehicles where space permits. Symbols will be the same size and color as product identification markings.

2.61.5 Potable Water Trucks. The words “POTABLE WATER”, in 3-inch red letters, will be centered vertically and horizontally on each side and rear of the tank.

2.62 PUMPING DURING COLD TEMPERATURES.

2.62.1 The marking “OPEN MANHOLE COVER WHEN PUMPING FUEL OIL OR WATER AT TEMPERATURES BELOW 25 DEGREES F” will be placed on all fuel, oil, and water dispensing units, except Refuelers with power operated vents and an interlock system that prevents fuel from being pumped out of the pumping system tank unless the vent is open, such as the R-11 Refueler. Marking will be placed in an area as near as possible to the pump compartment. Marking will be 2-inch red letters.

2.62.2 On two-wheel trailers, the marking as indicated in the preceding paragraph will be centered on the lower half of tank.

2.63 MANHOLE COVER AND NOZZLE MARKINGS.

Application and size of manhole cover and nozzle markings. These markings shall be applied to all manhole covers and nozzles on aviation and rocket fuel and oil dispensing units. Oil dispensing units may be marked by stenciling with black paint, color number 17038 or using reflectorized markings. (Exhibit A& B) Jet fuel and AVGAS dispensing units will be marked as follows:

2.63.1 Jet Fuel Dispensing Units. Manhole cover and nozzle markings on jet fuel dispensing units shall be applied using decals or stencils with red paint number 31136 as illustrated in Exhibits A & B.

2.63.2 AVGAS Dispensing Units. Manhole cover and nozzle markings on AVGAS dispensing units shall be applied using a purple background with silver letters and numbers as illustrated in Exhibits A & B.

(1) TYPE PRODUCT -JP4, -JP5, -JP8, AVGAS 115/145 etc.

(2) PRODUCT SYMBOLS:

+ A filled, four pointed, silver star on a red background represents Jet Fuel.

+ A filled, four pointed, silver star on a purple background represents AVGAS.

+ A filled, four pointed, black star and a filled black crescent represents rocket fuel.

- A filled black square represents lubricating oil.

2.63.3 NATO Symbol. Refer to MIL-STD-161F for these symbols. Examples: JP-8 fuel is F-34 and AVGAS 115/145 is F-22.

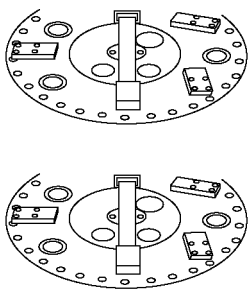

PN-TO36-1-191-001

Exhibit A. Manhole Cover Markings

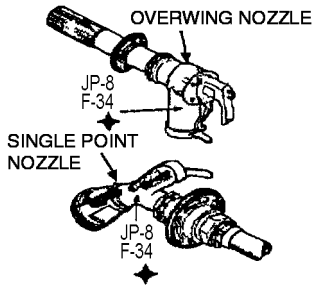

PN-TO-36-1-191-002

Exhibit B. Nozzle Markings

2.64 HYDRANT FUELING TRUCKS.

2.64.1 The following markings shall be displayed on both sides of the Hydrant Fueling Trucks. Markings may be decals or stencils, using red paint color number 31136.

"FLAMMABLE", 4-inch red letters.

"NO SMOKING WITHIN 50 FT", 3-inch red letters.

"JET FUEL JP8 F34," 3-inch red letters.

"CARGO FIRE AVOID WATER," 2-inch red letters.

2.64.2 The above markings will be applied on a panel locally fabricated from noncorrosive material 36 inches long by 13 inches wide (size of panel may be adjusted depending on make and model). For Beta Systems R-12 the panel will be mounted on the outside sheet metal of the chain guard of the hose reels. Two locally manufactured flat stock brackets for outer support will be required. For the Kovatch R-12 the panel will be mounted to the top of the hose reel frames. One locally manufactured support bracket will be required for the left side. Refer to Figure 2-21.

NOTE

Markings presently applied to all refueling vehicles will not be changed until they are damaged or deteriorated to the point that replacement is necessary.

2.65 PURGING FLUID VEHICLES.

Vehicles used for handling purging fluid shall be marked as follows:

2.65.1 The product marking PURGING FLUID shall be stenciled on both sides and rear of the tank in 6-inch black letters, color number 17048.

2.65.2 The product marking PURGING FLUID shall be stenciled adjacent to the manhole covers in 1-inch black letters, color number 17038.

2.65.3 The following statement shall be stenciled in 1-inch black letters, color number 17038, on both sides of the tank immediately below the product marking.

CAUTION

Do not use for any purpose other than purging fuel tanks.

2.66 WASTE FUEL VEHICLES.

All vehicles used for handling waste fuel shall be marked as follows:

2.66.1 The product marking WASTE FUEL shall be stenciled in 6-inch black letters, color number 17038, on both sides and rear of the tank.

2.66.2 The product marking WASTE FUEL shall be stenciled in 1-inch black letters, color number 17038, adjacent to the manhole covers.

2.66.3 A red “X” in 2-inch wide stripes shall be applied on hose reel compartment doors using red paint, color number 11105.

2.67 RECLAIMED FUEL VEHICLES.

All vehicles used for handling recoverable or reclaimed fuel shall be marked as follows:

2.67.1 The product marking RECLAIMED FUEL shall be stenciled in 6-inch red letters (lusterless), color number 31136.

2.67.2 The product marking RECLAIMED FUEL shall be stenciled in 1-inch red letters (lusterless), color number 31136, adjacent to the manhole covers.

2.68 GASEOUS SERVICING TRAILERS.

The following special markings will be applied to all gaseous oxygen or nitrogen trailers classified as vehicles in FSC 2330. (Not applicable to MH-1, MH-2, and AF/M32A17 tube bank semitrailers.)

2.68.1 Material Identification. For the purpose of this instruction, gaseous servicing trailers are divided into two categories. One employs an enclosure around the compressed gas cylinders such as E-3 and the E-2. The other has no enclosure and all cylinders are exposed to plain view of the servicing personnel. On those trailers which employ an enclosure, the word OXYGEN or NITROGEN, as applicable, will be applied in 3-inch high letters on the control panel, immediately below or adjacent to the pressure regulator assembly. In addition, the word OXYGEN or NITROGEN, as applicable, will be applied in 3-inch letters on the control panel, immediately below or adjacent to the pressure regulator assembly. In addition, the word OXYGEN or NITROGEN, as applicable, will be applied in 3-inch high letters on each side and near the top of the cylinder enclosure. On trailers which have no enclosure, all cylinders will be painted according to TO 42B5-1-2 for the material contained within the cylinders. Cylinders will be identified as indicated in TO 42B5-1-2 so that each cylinder will have the name of the gas contained within, stenciled parallel to the longitudinal axis and on diametrically opposite sides in letters 1-3/4 to 2 inches high. White enamel will be used on both oxygen and nitrogen cylinders. Due to space limitations, no attempt will be made to mark control panel on this type trailer.

2.68.2 Service Point Markings. Service point markings as prescribed by MIL-STD–101B for oxygen and nitrogen will be applied by stencil to all delivery line nozzles using full gloss black paint, color number 17038, or by use of decals. Two horizontally filled rectangles represent oxygen. A filled square with a quarter arc removed from each corner represents nitrogen. NATO CODES have not been assigned for oxygen or nitrogen and therefore are not applicable to these trailers. In addition to the filling point symbols, the word OXYGEN or NITROGEN, as applicable, will be stenciled with white enamel or applied with reflectorized tape on the hose immediately upstream of the servicing nozzle. Letters and symbols will be the largest size that the hose and nozzle will accommodate.

2.68.3 No Smoking. The words “NO SMOKING WITHIN 50 FT” in silver reflective letters on red reflective background, will be applied in 2-inch letters on each side of oxygen trailers having an enclosure around cylinders. Markings to oxygen trailers that do not have an enclosure will be at the discretion of the using command using a locally fabricated plate marked as described above. Nitrogen trailers do not require “NO SMOKING” marking since nitrogen is an inert material.

2.69 PROPELLANT SEMITRAILERS.

Semitrailer tankers, A/M32R-16 and A/M32R-17, will be marked as follows:

2.69.1 The type of material being transported, N_2O_4 CLASS A POISON, will be applied to each side of the trailer. Marking shall consist of 6-inch high blue letters on a white background.

2.69.2 NO SMOKING WITHIN 100 FEET in 6-inch silver reflective letters on a 12-inch wide red reflective background will be applied to each side of the tank.

2.69.3 N_2O_4 transporters shall display the marking OXIDIZERS in 2-inch yellow letters on a black background on the front and rear of the trailer and directly below the marking.

2.69.4 N_2O_4 transporters shall also have DOT-SP-3121 applied to the right side of the tank near the front in 2-inch high letters and numbers on a contrasting background.

2.69.5 N_2O_4 transporters shall be marked "INHALATION HAZARD" in 3-1/2-inch letters on a contrasting background on all four sides near the flammable placard.

2.69.6 The marking "FLAMMABLE" in 2-inch red letters on a silver background will be applied directly above the marking specified in Paragraph 2.69.2.

2.70 FIRE FIGHTING VEHICLES.

Fire fighting vehicles shall be uniformly marked with reflective striping to comply with the surface area of coverage as prescribed by National Fire Protection Association (NFPA) Standard 414, Aircraft Rescue and Fire Fighting Vehicles, and NFPA Standard 1901, Automotive Fire Apparatus.

2.70.1 Reflective striping may be applied to any previously non-striped fire fighting vehicle, using non-permanent (3M type) material. Details follow:

2.70.1.1 Striping materials shall be in accordance with ASTM D4956, Type III, Class 1 or 3. Previously striped trucks shall not be upgraded before complete repaint is required. The installation of these markings will be of a non-permanent type material (i.e., 3M type film), to facilitate easy removal and prevent damage to painted exterior of vehicles.

2.70.1.2 Colors: white on red trucks and white on desert tan trucks.

2.70.1.3 For P-2, P-4, P-12, P-15, P-18, P-19, P-21, P-22, P-23, P-24, P-26, P-28, P-30, and P-31, a 10-inch pattern: 1-inch stripe, 1-inch body color, 6-inch stripe, 1-inch body color, 1-inch stripe (1-6-1).

2.70.1.4 For P-10, P-13, P-20, P-27, P-29, and P-32, a 7-inch pattern: 1-inch stripe, 1-inch body color, 3-inch stripe, 1-inch body color, 1-inch stripe (1-3-1).

2.70.1.5 Location: Perimeter horizontal striping to be located below the body centerline, covering at least 1/2 of the length (or as space permits) of each facing surface (length or width).

2.70.1.6 For other fire protection equipment (command, foam trailer, hazmat trailer) stripes may be added when authorized by respective major command fire emergency services and logistic offices.

2.70.1.7 Funding for all striping shall be provided by base CE.

2.70.2 Vehicles will have the letters "UNITED STATES" and "AIR FORCE" as follows:

2.70.2.1 Synthetic or encapsulated gold leaf, with outline and black shadow. Other colors, with outline and black shadow. Other colors, with outline and shadow, are permitted to allow for sufficient contrast between lettering and vehicle paint color.

2.70.2.2 The preferred position for the lettering is on the front driver (left) and passenger (right) doors of the fire vehicles. When space on the doors will not permit room for the lettering, it will be placed on both sides of the vehicle on an unobstructed vertical panel such as the main body, water tank, or pump compartment. Refer to Figure 2-14 through Figure 2-19.

2.70.2.3 No "UNITED STATES AIR FORCE" lettering will be provided on desert tan trucks.

2.70.2.4 Size of lettering to be minimum of 2.5 inches to a maximum of 6 inches.

2.70.2.5 Funding for letters shall be provided by the base CE.

2.70.3 ARFF trucks and flight line support trucks will have the radio call numbers marked on each side and top. Vehicle call signs/numbers will be affixed to each side of the vehicle and on the roof as prescribed by NFPA Standards 414 and 1901. Details follow:

2.70.3.1 As space permits, the side numbers shall be a minimum of 16 inches.

2.70.3.2 As space permits, top numbers shall be a minimum of 24 inches in height and affixed with their base toward the front of the vehicle.

2.70.3.3 Color for call numbers shall be in sharp contrast to the vehicle color.

2.70.4 Fire chief and assistant fire chief vehicles will be marked “CHIEF 1” and “CHIEF 2” or “FIRE CHIEF” and “ASSISTANT CHIEF” respectively using reflective tape. An exception is allowed for those installations that are members of state or county fire organizations and use district or regional call signs. In this case, the vehicles may be marked in the same manner as above using the call sign assigned to the fire chief and assistant chief vehicles by the fire organization. If the regional call sign is used, “CHIEF 1,” “CHIEF 2,” “FIRE CHIEF” and “ASSISTANT CHIEF” will not be placed in any other location on the vehicle. Base fire department shields may be applied to CHIEF 1 and 2 only. The shield must fit within the “UNITED STATES” and “AIR FORCE” and not exceed 12 inches in height and width. Badge/markings will be installed with a non-permanent material (i.e., 3M type film).

2.70.5 Vehicles which have controls and/or equipment concealed in closed compartment may have the appropriate title marked in a centrally located place on the outside of the compartment doors using legible black letters. Local base fire chief may authorize the use of optional markings for compartment contents.

2.70.6 In the event a mutual aid agreement/memorandum of understanding entered into and approved by the wing commander between the installation and local municipality, county, state, or federal response plan warrant additional markings due to jurisdictional requirements, these will be submitted by the Base Civil Engineer with justification through Vehicle Management for approval. Logos, base names, organizational patches, insignias, and other markings are not authorized.

2.71 OPERATING INSTRUCTIONS.

2.71.1 To aid in the operation, and to prevent potential damage to equipment, and injury to personnel, vehicles without adequate operational instructions or “plates” in the driver’s or operator’s compartment may have the name of, or duty performed by the lever, switch, valve, or pedal, etc., marked on or near each, and the use or direction of movement if deemed necessary. These markings will be of the smallest readable size. Understandable abbreviations may be used. On equipment where it is determined that marking instructions will not obtain the desired results because of appearance, inadequate space, or other reasons, an operating instruction plate will be fabricated and fastened securely to the equipment within easy and full vision of the operator or driver.

2.71.2 Cranes, high reach maintenance and telephone line maintenance/construction vehicles that are not insulated and not designed for working in close proximity of electrical power lines shall be equipped with a metal sign, approximately 8 by 10 inches. The sign shall be affixed to the upper center of the cab panel directly in front of the operators knees. On other applicable vehicles, sign shall be affixed to the operators ground control panel and basket control panel. This sign shall have a white background with DANGER in 2-inch red letters; DO NOT OPERATE BOOM OR DERRICK WITHIN 10 FEET OF ELECTRIC LINES in 1/2-inch black letters. In addition, a metal plate 3 × 4 inches affixed to the right hand side of the above referenced DANGER sign having a red background with DO NOT OPERATE BOOM ABOVE 80 DEGREES FROM THE HORIZONTAL PLANE in 5/16-inch white letters.

2.71.3 All forklifts shall have “NO RIDERS” in 2-inch black letters, stenciled vertically on both uprights of the fork frame, facing the operator (Figure 2-30).

NOTE

When forklift upright size and/or hydraulic line placement will not accommodate placement of standard markings, local management will stencil “NO RIDERS” in minimum 1-inch black letters at a location easily seen by the operator.

2.71.4 Rollerized vehicle beds (K-Loaders and flatbed trailers) will have the legend “WATCH STEP” applied on the walkway at each end of the rollerized beds. The legend will be stenciled in 3-inch letters at one foot intervals beginning at each end of the rollerized bed and extending inward for 4 feet. The legend will be applied using yellow paint on black and green surfaces and black paint on yellow surfaces.

2.72 CONTINENTAL OR LYCOMING AIR-COOLED ENGINES.

All vehicles equipped with Continental or Lycoming air-cooled engines will have the auxiliary engine oil, which is specified in the applicable technical order, either stenciled or taped on a body panel near the engine, or on the access door to the engine, using 1/2-inch letters. When applying this information by stenciling, use white paint on red surfaces and black paint on yellow surfaces. When using tape, apply red tape with silver numbers.

EXAMPLE:
Auxiliary
Engine
Oil
Specifications
Grade

2.73 MARKING SECURITY FORCE VEHICLES.

2.73.1 Security Forces pickup trucks (2-door and 4-door) used for security duties shall be marked as follows: Security force badge decal will be centered on both front doors using a temporary adhesive type material (example: magnetic or 3M vinyl), easily removable without damaging painted surfaces. Security force badges will be on a white or olive drab background, depending on vehicle color and local requirements. Rear side panel markings for pickup trucks will read “SECURITY FORCES” and be applied on both side panels,

flush with the top of the bed rails. Markings must be uniform height of six inches, have dark blue or olive drab background, with 4-inch lettering in white or black, depending on vehicle color. No additional markings will be applied to the truck.

NOTE

Due to differences in vehicles (i.e., size of fenders, doors, and other panels), letter size and location/size of security forces shields may vary if the intended location does not allow enough space for application.

2.73.2 Security Forces SUVs used for security duties shall be marked as follows (Figure 2-24): Security Forces badge decal will be centered on both front doors using a temporary adhesive type material (Example: magnetic or 3M vinyl), easily removable without damaging painted surfaces. Security Forces badges will be on a white or olive drab background, depending on vehicle color and local requirements. Rear quarter-panel markings for SUVs will read "SECURITY FORCES" and be applied on both sides, centered vertically between the top of the wheel well and lower edge of glass, and horizontally between the rear door and back of vehicle. Markings must be uniform height of six inches, have dark blue or olive drab background, with 4-inch lettering in white or black, depending on vehicle color. No additional markings will be applied to the vehicle.

2.73.3 Security Forces HMMWVs used for security duties shall be marked as follows: Security Forces badge decal will be centered on both front doors using a temporary adhesive type material (Example: magnetic or 3M vinyl), easily removable without damaging painted surfaces. Security Forces badge will be on an olive drab background. Rear/side markings will read "SECURITY FORCES" and be applied on both side panels, flush with the top of the bed rails or centered on the rear hatch deck lid sides, as applicable, with 4-inch black letters. No additional markings will be applied to the vehicle.

2.74 ALERT, REFLEX, BASE OPS, AND BASE CIVIL ENGINEER (FIRE MARSHAL).

Marking of these and other vehicles requiring specific identification will be accomplished by use of a detachable device. The mounting bar NSN 2540-00-409-8878 may be used when approved by the Major Command concerned.

2.75 "FOLLOW ME" VEHICLES.

The "FOLLOW ME" sign will be painted white, reflective, FSN 8010-965-2500.

2.76 LOW VISIBILITY MARKING. SNOW REMOVAL EQUIPMENT.

All snow removal equipment will be outlined to indicate height, length, and width using silver reflective tape conforming to ASTM-D4956, Type II, Class 3, Type 1, color G.

2.77 MARKING EXPLOSIVE ORDINANCE DISPOSAL VEHICLES.

2.77.1 These vehicles may be equipped with rotating warning lights, as well as sirens. When warning lights and sirens are used, they will be installed on a removable mounting bar NSN 2540-00-409-8878. The abbreviated legend E.O.D. will be applied to a metal backing plate in 2-inch silver reflective letters on a red background and affixed to the front and rear of the mounting bar. The type of lights and color of lenses will be in accordance with local or state laws regarding operation of emergency vehicles or in cases of overseas operation, in compliance with status of forces or host nation agreements.

NOTE

This guidance takes precedence over TO 36-1-161 or TO 36-1-171.

2.77.2 EOD vehicles purchased under GSA contract number GS-30F-1046D, manufactured by Emergency One, Inc., may retain the organizational markings that were on the vehicle at the time of acceptance by base-level vehicle management.

2.78 MARKING VEHICLES EQUIPPED WITH MS51335 AND CID A-A-52550 SERIES PINTLE HOOKS.

All vehicles (except toned down) equipped with a manual release pintle hook, MS51335 and CID A-A-52550 series, will be marked as illustrated in Figure 2-19 using 1/2-inch silver or white reflective letters on a red background. Toned down vehicles will be marked utilizing a non-reflective decal with 1/2-inch black letters, color number 37038, on green background, color number 24052, or clear background. Units choosing to mark vehicles with towing capacities, use letter size and color scheme as mentioned above. Markings shall be applied with stencil or other suitable method and placed

in the general area of the pintle hook. Proper towing capacities should be obtained from the end item TO.

NOTE

Vehicles using pintle hooks (Holland PH30) with the automatic secondary locking device, the above decal is not required.

2.79 SLOW MOVING VEHICLE EMBLEM.

A slow moving vehicle emblem will be applied on the rear of all slow moving vehicles in a readily visible location:

NOTE

Due to the various makes, models, and vehicle designs involved, no specific mounting instructions will be specified. It will be the responsibility of local operating officials to determine which vehicles will require the slow moving vehicle emblem based on local operational requirements.

2.80 STRIKE HAZARD MARKINGS.

Strike hazard markings shall be applied on crane counterweights and derrick cabs that extend out and over the main chassis while being swung during operations. The strike hazard marking will consist of 4-inch alternating bands of black and yellow placed on the lower areas and back end as demonstrated in Figure 2-22 to denote a strike hazard.

2.81 CENTER OF BALANCE MARKINGS.

The center of balance (CB) and basic weight marking may be applied to those vehicles that are susceptible to air deployment as follows:

2.81.1 The CB marking will be applied on each side of the vehicle in a 1-inch wide stripe not less than 3 inches long. The stripe will be located at the lowest visible point of the vehicle. The letters CB will be applied directly above the stripe. The basic weight of the vehicle will be applied adjacent to the stripe to indicate basic weight of the vehicle.

EXAMPLE:
CB
2430 LBS.

2.81.2 The above marking may be applied using reflective paint of a contrasting color or the reflective tape listed in the information table at the end of this chapter.

2.82 NOISE HAZARD MARKING.

Noise hazard marking shall be displayed in the vehicle cab in a readily visible location or adjacent to the access door on all vehicles determined to exceed noise level requirements. The size of marking shall be approximately 3-3/4 inches × 2-1/2 inches and shall be applied by stenciling in a contrasting color as follows:

HAZARD
Hazardous noise area ear protection required.

2.83 MARKING CAMOUFLAGE PATTERN PAINTED VEHICLES.

Camouflage pattern painted vehicles shall be marked as follows:

2.83.1 Unit identification shall be applied in black lusterless paint. When National Symbol (STAR) is used it shall be applied in accordance with Paragraph 2.41 using lusterless black paint camouflage.

2.83.2 Safety and instructional markings such as tire pressure, fuel type and fill level may be retained in black lusterless letters no larger than 1 inch. Markings directly related to personnel safety must be evaluated by responsible safety personnel.

NOTE

This guidance takes precedence over TO 36-1-161 or TO 36-1-171

2.84 MARKING LAW ENFORCEMENT SEDANS.

Law enforcement sedans shall be marked as follows:

NOTE

Due to differences in vehicles (i.e., size of fenders, doors, and other panels), letter size and location/size of security forces shields may vary if the intended location does not allow enough space for application.

2.84.1 POLICE in 7-inch reflective strata blue letters, color number 15045, shall be centered on a rearward facing vertical portion of the trunk lid as illustrated in Figure 2-5.

NOTE

Use of 4-inch letters permitted for the vehicles designs that prevent the esthetic application of 7-inch letters.

2.84.2 POLICE in 2 or 4-inch reflective strata blue letter, color number 15045, shall be applied to the top vertical side of both front fenders as illustrated in Figure 2-5.

2.84.3 A security police badge shall be centered on both front doors as illustrated in Figure 2-5.

2.84.4 Vehicle registration number in 1-1/2-inch reflective strata blue letters will be applied and centered on the license plate between the legend US AIR FORCE and FOR OFFICIAL USE ONLY. A single license plate will be placed on the rear of vehicle, illustrated in Figure 2-5, unless otherwise directed by MAJCOM or local law.

2.84.5 When authorized by major command, dual 4-inch strata blue stripes 2 inches apart may be applied to each side of the vehicle as illustrated in Figure 2-5. Stripes may be applied with reflectorized tape 3M part number 690-75 or may be painted using the following procedure: Apply a comparable blue metallic acrylic enamel, Dupont Bonzai blue formula number B9134 (or equivalent). Paint over cover coat with blue pearl. Paint and tape shall be locally procured.

2.84.6 The base chief of security police may authorize the use of the following optional markings:

2.84.6.1 Emergency Dial 911 - Use white letters and locate on the rear portion of the uppermost blue stripe on each side of the vehicle as illustrated in Figure 2-5. (Vehicle without strip use 1-1/2-inch strata blue letters in approximately the same area.)

2.84.6.2 Crime Stop Dial XXXXXXX as described in Paragraph 2.84.6.1. above.

2.84.6.3 Such items as crime stop programs bumper stickers, dare program stickers, etc., may be applied to the bumpers, light bars or located on the rear windows such that the sticker does not affect rearward vision, nor should it cover the center mounted stop light.

2.84.6.4 When authorized by MAJCOM, military working dog magnetic stenciling may be applied. Magnetic reflective stencils will mark Security Forces vehicles used for transporting military working dogs. Magnetic signs will be applied to the rear side doors of the vehicle using red letters on a reflective white background. Lettering is to be a minimum of 3 inches in height. Exact markings will be, CAUTION: MILITARY WORKING DOG. The word caution must be centered above the blue stripe if so equipped; military working dog will be stenciled below. Markings for vehicles other than four door sedans and trucks will be marked in a similar fashion centered on the front portion of the rear quarter panel.

2.85 MARKING 41-PASSENGER INTERCITY BUSES USED FOR SUPPORT OF BANDS..

2.85.1 The band's number followed by "AIR FORCE BAND" may be centered on the blue background below the windows on each side of the bus when approved by the Major Command: EXAMPLE: "701 AIR FORCE BAND".

2.85.2 The marking shall be applied in 12-inch high letters and numbers using white paint to match the color of the bus top.

2.85.3 All other markings shall be standardized in accordance with this Technical Order.

NOTE

When authorized by the MAJCOM (CONUS only), buses may display the slogan: "Air Force: A Great Way of Life". The slogan will be on a pressure sensitive decal applied to both sides of the bus directly below the windows, between the fender well and front door (driver's window on left side).

2.85.4 Buses previously marked with band names shall not be remarked until routine repainting is required.

2.86 WRM MARKINGS.

Vehicles will be marked with a triangle to indicate their status as WRM assets. The WRM triangle will be a black solid colored equilateral triangle standing upright. The triangle will be applied to the front and rear bumpers of a vehicle or in a conspicuous location on the front and rear of vehicles not having bumpers. The size of the triangle will not exceed six inches in size and should be uniformly applied to like assets. When a vehicle is removed from WRM status the triangle must be removed.

2.87 INSTALLATION OF REFLECTORIZED TAPE.

2.87.1 Clean surface of vehicle prior to applying marking.

2.87.2 Remove liner film down.

2.87.3 Position emblem on clean surface. Tack in position with thumb pressure.

2.87.4 Start in center using hard overlapping strokes of low friction plastic squeeze.

2.87.5 Re-squeeze the edges using very firm strokes.

2.87.6 Apply clean sealer to the edges of the tape.

2.87.7 Repairs to damaged areas can be made without stripping original tape. Clean damaged area and apply new tape over affected area.

2.88 REMOVAL OF REFLECTORIZED TAPE.

WARNING

Lacquer thinner, kylol, and isopropyl alcohol are flammable and toxic. Good general ventilation is normally adequate. Skin and eye protection is required. Avoid all sources of ignition.

2.88.1 Pressure sensitive tape may be removed by softening with heat (heat lamp, heat gun, steam, etc.) and adhesive residue can be softened with rags soaked with wipe solvent P-W-2891 or isopropyl alcohol and scraped away with plastic scraper or putty knife.

2.88.2 When tape has been applied for several years it may be more easily removed by masking off the area around the tape and then brushing with paint remover, TT-R-2918, Type I over the tape. Several applications of remover may be required at shortly spaced intervals; tape residue should be removed with plastic scraper or bevel edge putty knife between applications. The paint remover may damage the paint beneath the tape, requiring cleaning and touchup painting in that area.

2.88.3 A proven alternative to the above procedure is use of a 4 or 6-inch “stripe, molding and decal remover” disk (3M) that removes pressure sensitive tape without damaging the underlying paint finish. Disks are available under NSN 5130-01-390-9503 (4-inch) and NSN 5130-01-390-9504 (6-inch) and an adapter for using the disks with a drill is available under NSN 5130-01-391-2095.

NOTE

The above solvents are flammable and toxic, therefore, all safety precautions shall be taken.

2.89 REQUISITIONING OF MARKINGS.

All markings listed in this chapter, source coded WR-ALC, will be requisitioned in accordance with AFI 37-162. Request will be submitted on DD Form 843 to DAPS Travis, 400 Burgan Blvd., Bldg 3, Travis AFB, CA 94535, (707) 424-0770, DSN 837. Completed Form 843 may be faxed to (707) 424-4537, DSN 837.

NOTE

If decals are not available upon immediate requisition and equipment involved hampers mission capability or presents a safety hazard in an unmarked condition, appropriate markings may be stenciled on vehicles or equipment prior to receipt of decals.

2.90 FIGURES.

The following figures are representative of the various types of bumpers, cabs, and bodies upon which the vehicle markings specified in this technical order are to be placed. The markings illustrated are furnished as a guide to indicate the location of the markings in respect to the space available. Markings of vehicles not illustrated herein will be applied in a manner as nearly as possible to that illustrated for comparable vehicles.

Table 2-1. Required Markings for Common Substances

Material	I.D. No	Required Labels*
Oxygen Refrigerated Liquid	UN1073	Nonflammable gas, Oxidizer
Compressed Oxygen	UN1072	Nonflammable gas, Oxidizer
Compressed Nitrogen	UN1066	Nonflammable gas
Liquid Hydrogen	UN1966	Flammable gas
Compressed Hydrogen	UN1049	Flammable gas
Liquid Helium	UN1963	Nonflammable gas
Compressed Helium	UN1046	Nonflammable gas
Fuel, Aviation, Turbine Engine	UN1863	Flammable Liquid
Kerosene	UN1223	Flammable Liquid
Diesel Fuel	NA1993	None
Liquid Petroleum Gas	UN1075	Flammable gas
LPG (Propane)	UN1978	Flammable gas
Dinitrogen Tetrozide	UN1067	Poison Gas, Oxidizer, Corrosive
Aerozine 50	UN2929	Poison, Flammable Liquid
Nitrogen, Refrigerated Liquid	UN1977	Nonflammable gas

* Labels can be found in 49 CFR 172.519. The required markings were obtained from The Hazardous Materials Table in 49 CFR 172.101.

PN-TO36-1-191-003

Figure 2-1. License Plate

PN-TO36-1-191-004

Figure 2-2. Modular Ambulance (Sheet 1 of 2)

PN-TO36-1-191-005

Figure 2-2. Modular Ambulance (Sheet 2)

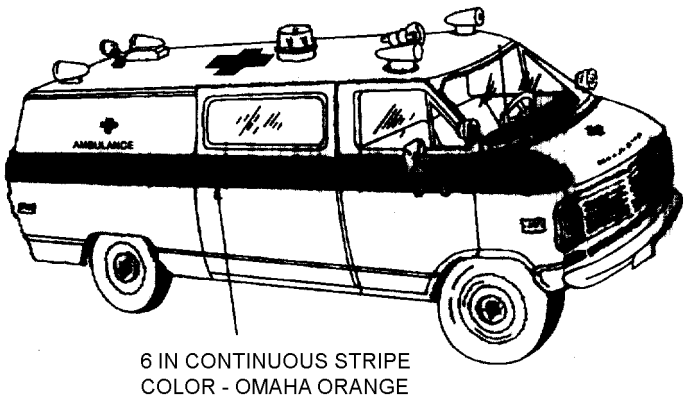

PN-TO36-1-191-006

Figure 2-3. Van Ambulance

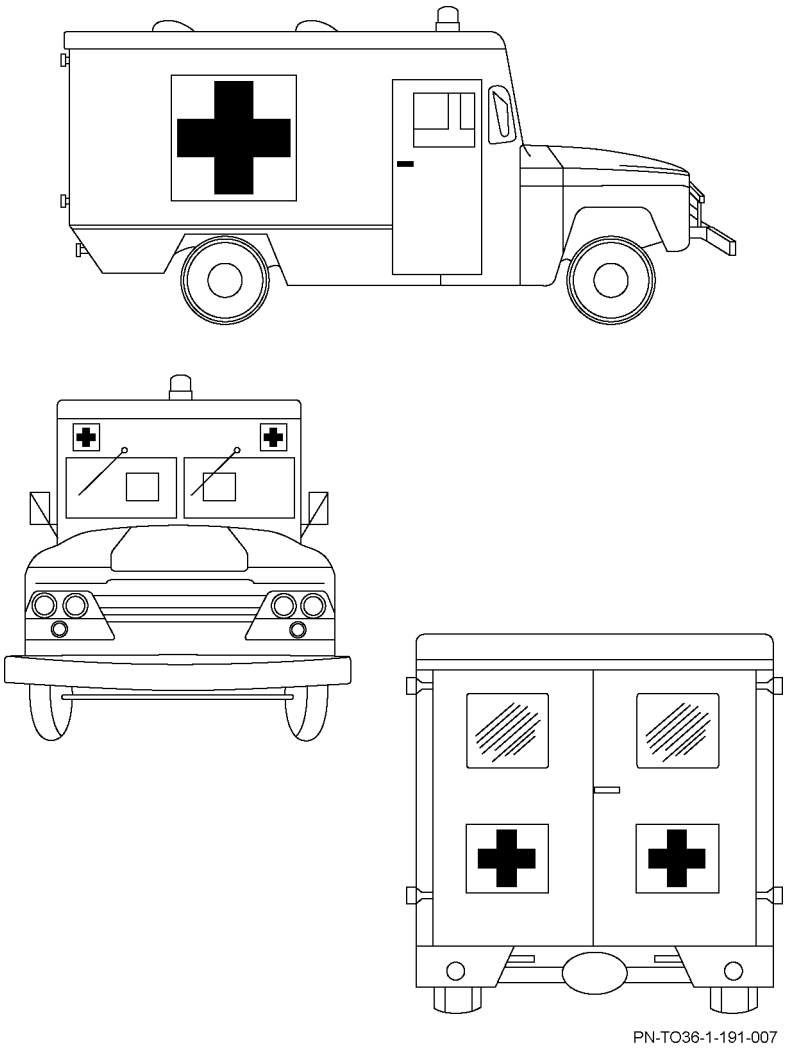

Figure 2-4. Truck Ambulance

PN-TO36-1-191-008

Figure 2-5. Law Enforcement Sedan

PN-TO36-1-191-009

Figure 2-6. Warehouse Tug

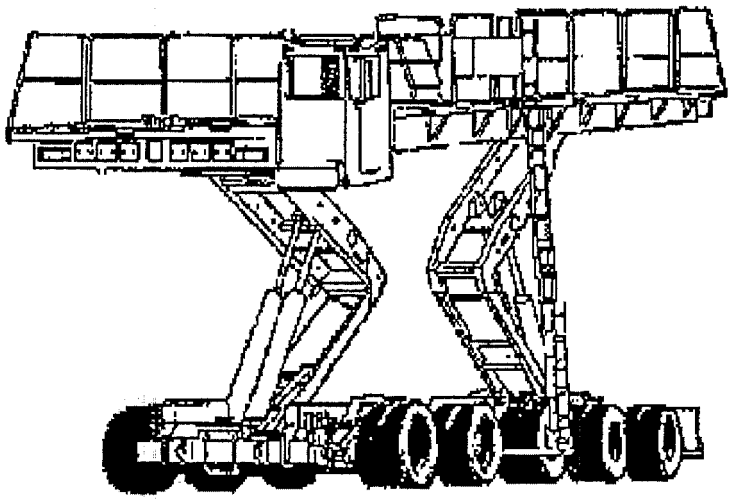

NOTE

BLACKENED OUT AREAS REPRESENT HIGHLIGHT MARKINGS. SILVER TAPE REFLECTORIZED STRIPE

PN -TO36-1-191-010

Figure 2-7. Highlighting Marking, Aircraft Cargo Handling Truck

PN-TO36-1-191-011

Figure 2-8. Harness Required Area

PN-TO36-1-191-012

Figure 2-9. Highlighted Markings, Age Towing Tractor (Sheet 1 of 2)

PN-TO36-1-191-013

Figure 2-9. Highlighted Markings, Age Towing Tractor (Sheet 2)

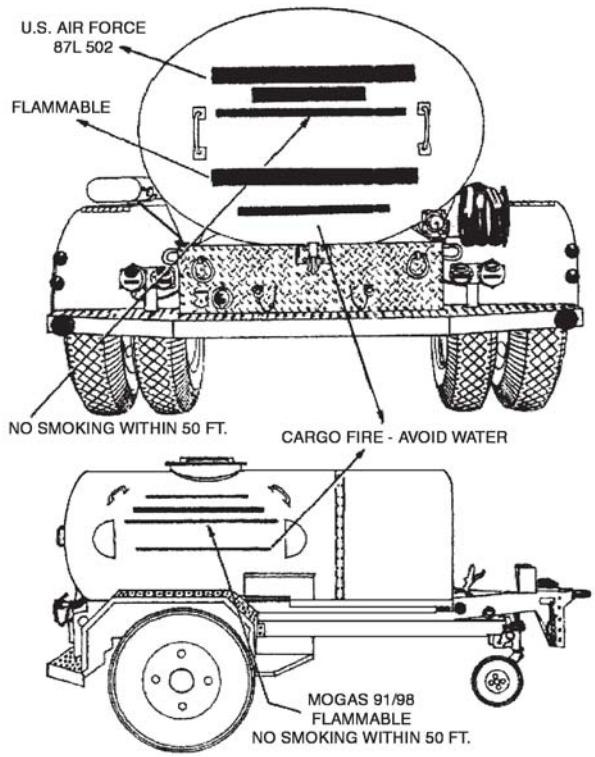

PN-TO36-1-191-014

Figure 2-10. Fuel Trailer - Two Wheel

PN-TO36-1-191-015

Figure 2-11. Fuel or Oil Servicing Trucks (Sheet 1 of 3)

PN-TO36-1-191-016

Figure 2-11. Fuel or Oil Servicing Trucks (Sheet 2)

PN-TO36-1-191-017

Figure 2-11. Fuel or Oil Servicing Trucks (Sheet 3)

PN-TO36-1-191-018

Figure 2-12. Refueling Truck (Sheet 1 of 3)

PN-TO36-1-191-019

Figure 2-12. Refueling Truck (Sheet 2)

PN-TO36-1-191-020

Figure 2-12. Refueling Truck (Sheet 3)

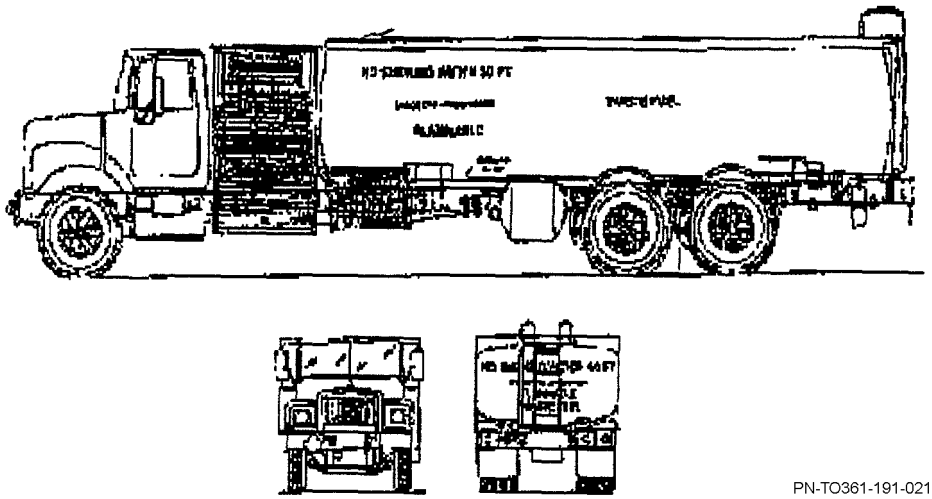

Figure 2-13. Waste Fuel Vehicle

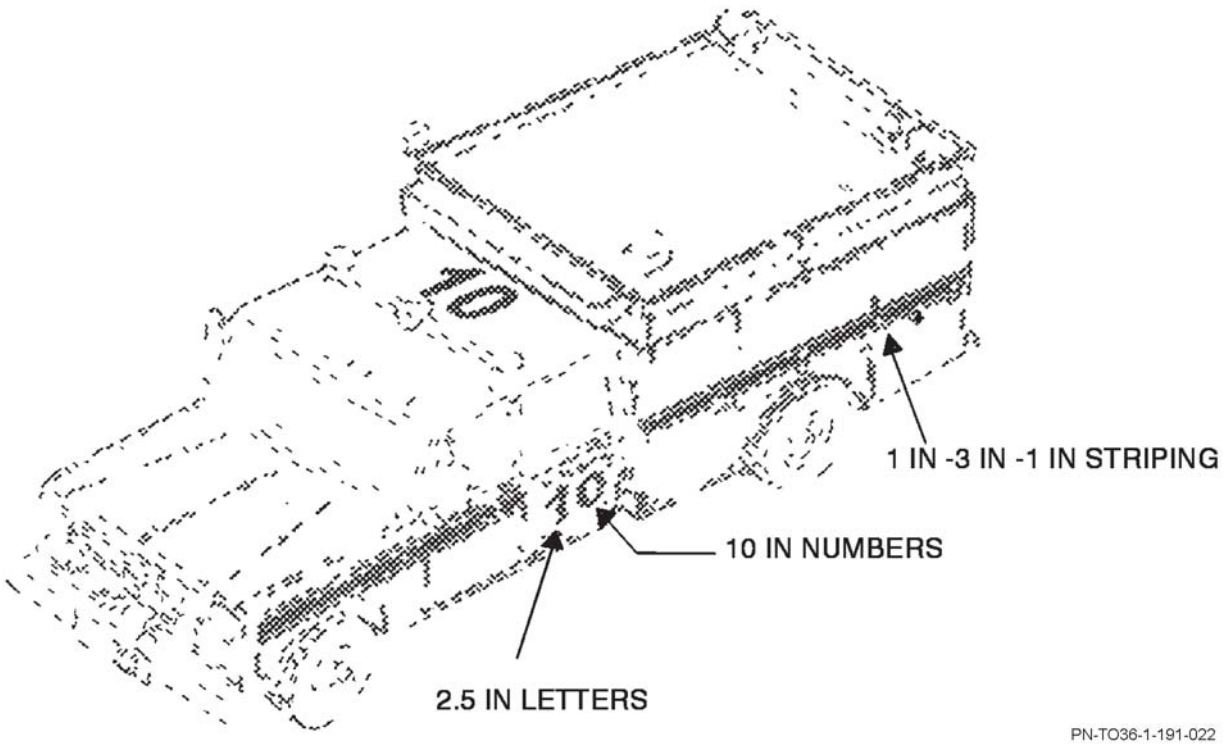

Figure 2-14. Rescue Fire Truck

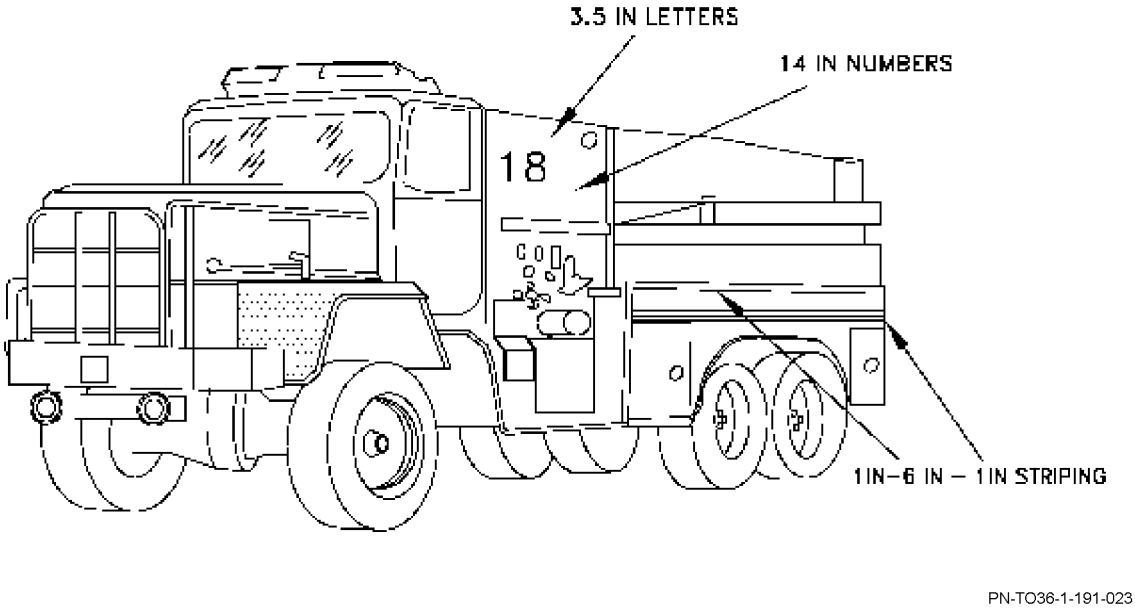

Figure 2-15. P-18 Water Tanker Fire Truck

PN-TO36-1-191-024

Figure 2-16. P-19 Fire Truck (Sheet 1 of 3)

PN-TO36-1-191-025

Figure 2-16. P-19 Fire Truck (Sheet 2)

PN-TO36-1-191-026

Figure 2-16. P-19 Fire Truck (Sheet 3)

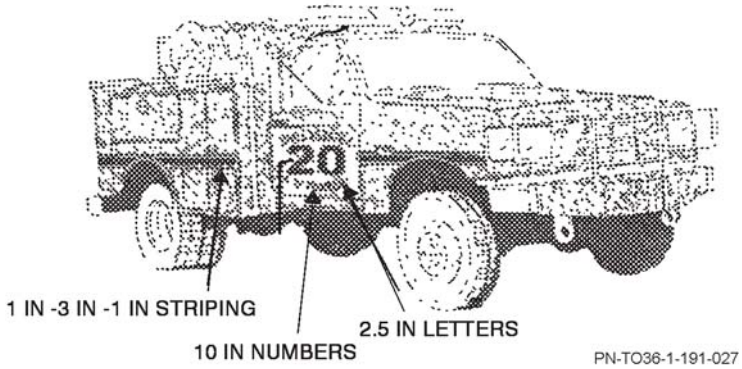

Figure 2-17. P-20 Ramp Fire Truck

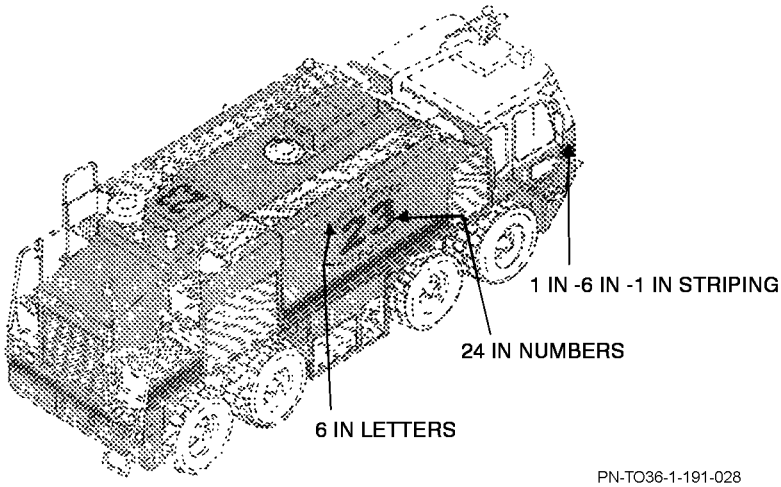

Figure 2-18. P-23 Ramp Fire Truck

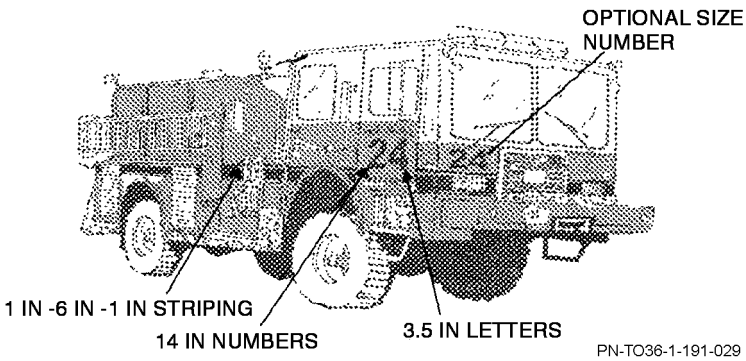

Figure 2-19. P-24 Ramp Fire Truck

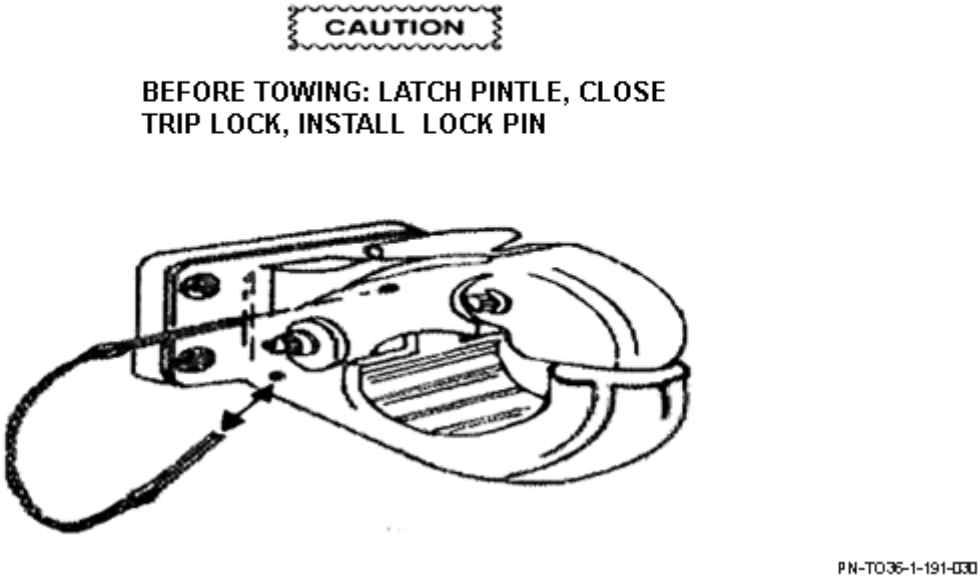

Figure 2-20. Manual Release Pintle Hooks

PN-TO36-1-191-031

Figure 2-21. Hydrant Fueling Truck (Sheet 1 of 6)

PN-TO36-1-191-032

Figure 2-21. Hydrant Fueling Truck (Sheet 2)

PN-TO36-1-191-033

Figure 2-21. Hydrant Fueling Truck (Sheet 3)

PN-TO36-1-191-034

Figure 2-21. Hydrant Fueling Truck (Sheet 4)

PN-TO36-1-191-035

Figure 2-21. Hydrant Fueling Truck (Sheet 5)

PN-TO36-1-191-036

Figure 2-21. Hydrant Fueling Truck (Sheet 6)

PN-TO36-1-191-037

Figure 2-22. Strike Hazard Marking

PN-TO36-1-191-038

Figure 2-23. Highlighting Marking, Refueling Vehicles

PN-TO36-1-191-039

Figure 2-24. Security Forces SUV (Sheet 1 of 2)

PN-TO36-1-191-040

Figure 2-24. Security Forces SUV (Sheet 2)

PN-TO36-1-191-041

Figure 2-25. Shrink-Wrapped Motor Coach Bus

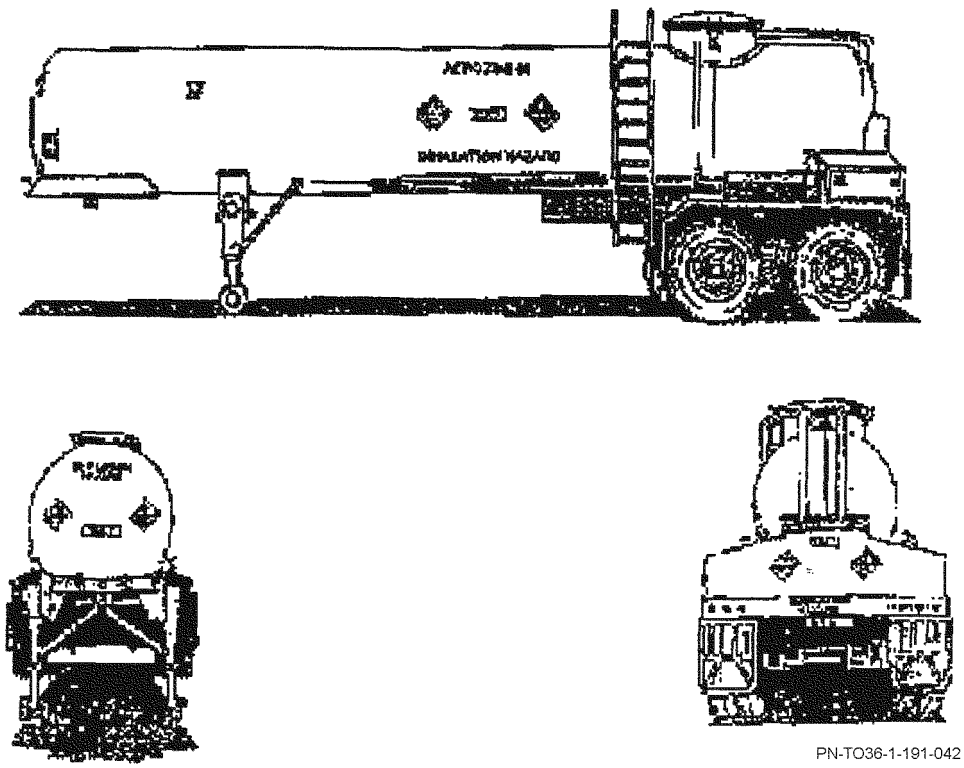

PN-TO36-1-191-042

Figure 2-26. N204 Semi-Trailer

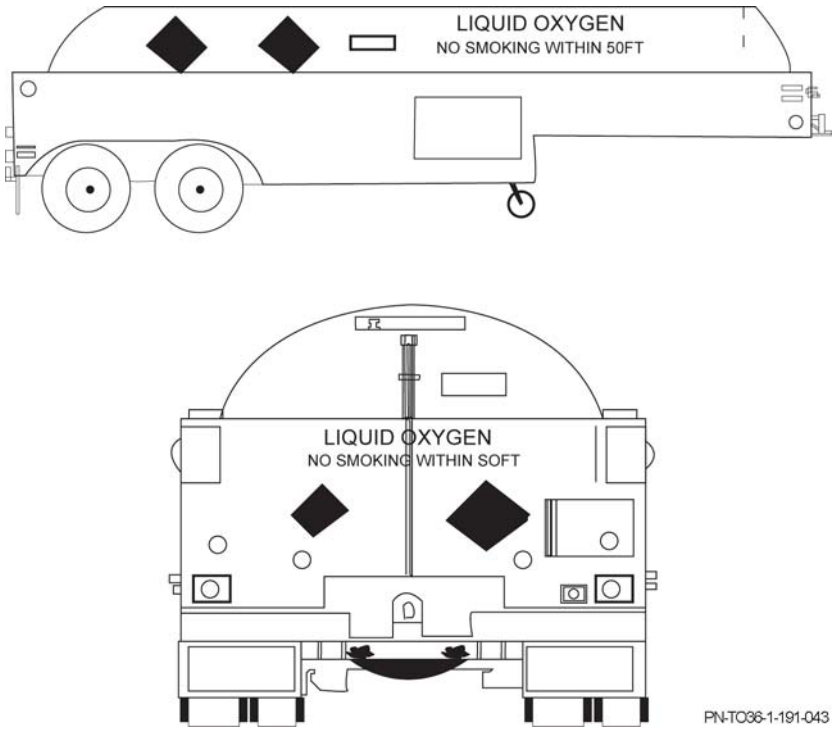

Figure 2-27. Liquid Oxygen Unit

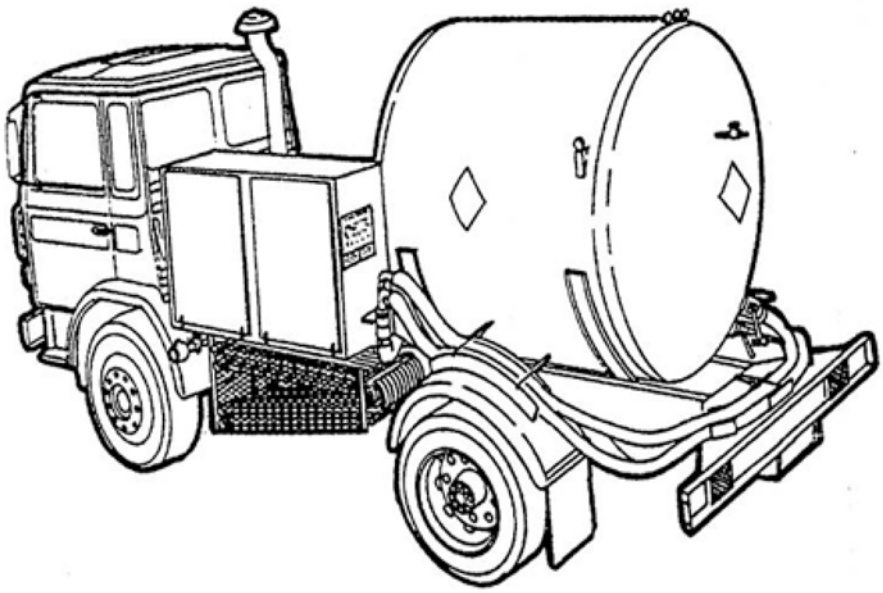

PN-TO36-1-191-044

Figure 2-28. Liquid Nitrogen Trailers and Trucks

PN-TO36-1-191-045

Figure 2-29. Highlighted Trailers and Tractors (Sheet 1 of 2)

PN-TO36-1-191-046

Figure 2-29. Highlighted Trailers and Tractors (Sheet 2)

PN-TO36-1-191-047

Figure 2-30. Forklift Truck

2.90.1 The following materials are required for compliance with this technical order. Refer to Table 2-2.

Table 2-2. Materiel Management Information

Nomenclature	Stock Number	Source
Acid-Phosphoric metal conditioner (30 gallon drum)	6850-00-551-9577	Ordnance
Activator, press sensitive adhesive (1 pint can)	NSL	LP
Bar roof mounting	2540-00-409-8878	DLA
Replacement for MEK and Lacquer Thinner	6850-01-381-4408 (55 Gallon Drum)	GSA
	6850-01-381-3300 (5 Gallon Can)	GSA
Substitute for toluene/xylene and MEK	6850-01-381-5088 (55 Gallon Drum)	GSA
	6850-01-381-5139 (5 Gallon Can)	GSA
Cloth - cotton, cheesecloth, unshrunk, white, Construction II, 50 yd bolt 36 in. wide; Fed Spec CCC-C-440,	8305-00-205-3495	GSA
Coating Compound - Bituminous solvent, black, acid-proof paint with asphalt base, Spec MIL-C-4501, medium solids, Brushing and spraying consistency, type II (1 gallon)	8030-00-290-5141	GSA
Coating Compound - Metal pretreatment, acid-resin, Spec MIL-C-15328A (5 gallon can)	8030-00-165-8577	AF Stock
Compound - Grease, cleaning type I - nonphenolic (55 gallon drum)	6850-00-559-2836	GSA
Compound - Grease, cleaning type II - phenolic (55 gallon drum)	6850-00-559-2835	GSA
Compound - high pressure, steam cleaning, alkaline powder, for metal surfaces, 125 lb drum	6850-00-256-0157	GSA
Enamel - Green, Semi-Gloss, color no. 34087,	8010-00-297-0586	GSA
Enamel - Green, Olive Drab	8010-00-297-0560	GSA
Disk - abrasive, closed coating; grit, 7 in diameter, 7/8 in arbor hole	5345-00-558-5929	GSA
Disk - abrasive, closed coating; 24 grit, 7 in diameter, 7/8 in arbor hole	5345-00-558-5928	GSA
Disk - abrasive, closed coating; 36 grit, 7 in diameter, 7/8 in arbor hole	5345-00-196-1692	GSA
Disk - abrasive, open coating; grade 0, 7 in diameter, without arbor hole	5345-00-186-8248	DOD
Enamel - Black, full gloss, color no. 17038	8010-00-527-2050	GSA
Enamel - Black, lusterless, color no. 37038	8010-00-297-0547	GSA
Enamel - Gray, color no. 16081, full gloss type I	8010-00-616-7496	GSA
Enamel - Green, semi-gloss, color no. 24633	8010-00-527-3197	GSA
Enamel - Orange Yellow, full gloss, color no. 13538	8010-00-527-2045	GSA
Enamel - Red, color no. 11105, full gloss Type I	8010-00-616-7487	GSA
Enamel - Red, lusterless color no. 31136	8010-00-472-5512	GSA
Enamel - Strata Blue, color no. 15046 Fed Std No. 595	8010-00-298-2287	DOD

Table 2-2. Materiel Management Information - Continued

Nomenclature	Stock Number	Source
Enamel - Yellow, full gloss, color no. 13538	8010-00-527-2045	GSA
Enamel - Strata Blue, color no. 15045 Fed Spec MIL-D-46141		GSA
Kerosene (55 gallon drum, 18 Gauge, type II)	9140-00-242-6751	AF Stock
Non-slip fabric, pressure sensitive adhesive backing; on 3/4 in × 24 in, 50 pieces per box-black, green, red or silver	7220-00-823-7423	GSA
Non-slip fabric, pressure sensitive adhesive backing; 5 1/2 in × 5 1/2 in, 50 pieces per box-black, green, red or silver	7220-00-823-7421	GSA
Light, warning vehicular, yellow pulsating, 24 volt	6220-00-985-3152	DLA/S9G
Light, warning vehicular, yellow pulsating, 12 volt	6220-00-985-3153	DLA/S9G
Enamel, Alkyd Semi-gloss, color no. 24052	8010-01-131-9194	GSA
Light, warning vehicular, amber rotating, 14 volts, MS5137-4	6220-00-947-7535	DLA/S9G
Light, warning vehicular, amber rotating, 28 volts	6220-00-947-7570	DLA/S9G
Light, warning vehicular, red rotating, 28 volts, MS51317-1	6220-00-958-7897	DLA/S9G
Light, warning, vehicular, blue rotating 15 volts, MS51317-6	6220-00-947-7572	DLA/S9G
Light, warning vehicular, blue rotating, 28 volts, MS51317-5	6220-00-947-7621	DLA/S9C
Enamel, gray color no. 16081 Fed Spec MIL-C-83286	8010-01-329-6303	GSA
Enamel, yellow color no. 13538 Fed Spec MIL-C-83286	8010-01-265-9153	GSA
Enamel, blue, color no. 15045 Fed Spec MIL-C-83286		GSA
Non-slip fabric, pressure sensitive adhesive backing; 6 in × 24 in, 50 pieces per box-black, green, red or silver	7220-00-823-7422	GSA
Non-slip fabric, pressure sensitive adhesive backing; 6 in × 60 ft roll, black, green, red or silver	7720-00-823-7419	GSA
Non-slip fabric, pressure sensitive adhesive backing; 24 in × 60 ft roll, black, green, red or silver	7220-00-823-7420	GSA
Paint-Bituminous coal tar, pitch base, Spec MIL-C-450a	8030-00-290-5141	GSA
Paint, reflective white, 12 lb can	8010-00-965-2500	GSA
Paint, Strata blue, 16 oz. aerosol can	8010-00-988-1458	GSA
Plate, Air Force License part no. AF-1, Color White		
Part no. AF-2, Color Olive Drab		
Part no. AF-3, Color Desert Sand		
Polyurethane Coating, dark green (24052) part no. PWC 218 Pacific West		
Polyurethane Coating, green color no. 24052 Fed Spec MIL-PRF-85285D	8010-01-305-5555	GSA

Table 2-2. Materiel Management Information - Continued

Nomenclature	Stock Number	Source
Polyurethane Coating, dark green color, no. 14052, Fed Spec MIL-PRF-85285D; 2 quart kit	8010-01-362-3877	GSA
Polyurethane Coating, dark green color, no. 14052, Fed Spec MIL-PRF-85285D; 2 gallon kit	8010-01-362-3876	
Primer-synthetic refinishing, Spec TT-P-636b (5 gallon pail)	8010-00-161-5718	GSA
Remover-paint and varnish; alkali type; powder form, Spec MIL-R-25134	8010-00-515-2258	DOD
Respirator-paint spray	4240-00-022-2524	AF Stock
Sealer, non-reflective marking edge 8 oz can	NSL	LP
Sealer, reflective marking edge, 8 oz can	NSL	LP
Star symbol - white lusterless, pressure sensitive adhesive backing; code no. 654L-USPSW, 6 in	7690-00-781-2496	GSA
Star symbol-white lusterless, pressure sensitive adhesive backing; code no. 655:-USPSW: 10 in	7690-00-781-2497	GSA
Steel, sheet-carbon, hot rolled, annealed; 0.063 in. thick, Fed Spec QQ-S-636	9515-00-640-4201	AF Stock
Tape-masking, scotch manila, creped, 1 in wide, 60 yd. roll Type I	7510-00-266-6712	GSA
Tape-pressure sensitive adhesive, 2 in wide, oil and water resistant, 60 yd Roll	7510-00-079-7906	GSA
Tape, reflective, pressure sensitive adhesive backing; 2 in × 5 yd Roll 3270 silver	9390-00-949-8045	GSA
Tape, reflective, pressure sensitive adhesive backing; 3 in × 50 yd Roll 3270 silver		GSA
Tape, reflective, pressure sensitive adhesive backing; 4 in × 50 yd Roll 3270 silver	9390-00-949-8047	GSA
Tape, reflective, pressure sensitive adhesive backing; 4 in × 50 yd Roll 3271 yellow	9390-00-057-4543	GSA
Tape, reflective, pressure sensitive adhesive backing; 1 in × 50 yd Roll 3271 yellow or 3272 red (PN 137-165)	9390-00-753-3208	GSA
Tape, reflective, pressure sensitive adhesive backing; 2 in × 50 yd Roll 3271 yellow or 3272 red (PN 137-166)	9390-00-949-7588	GSA
Tape, reflective, pressure sensitive adhesive backing; 3 in × 50 yd Roll 3272 red (PN 137-167)	9390-00-949-7598	GSA
Tape, reflective, pressure sensitive 3M adhesive back; color blue, 4 in wide × 50 yd, Removable (3M PN 690-75) St. Paul MN	N/A	L.P.
Thinner-Synthetic resin enamel; Spec TT-T-306	8010-01-441-5940	GSA
Type III-Trichloroethane technical (55 gallon drum)	6810-00-551-1487	GSA
Walkway-Compond non-slip, rough type black, grit as an integral part of the coating, Spec MIL-W-5044, type II (1 gal)	8010-00-641-0427	AF Stock

2.90.2 The following markings are required for compliance with this technical order. Markings will be requisitioned from:

DAPS Travis
400 Burgan Blvd., Bldg 3
Travis AFB, CA 94535
Voice (707) 424-0770
(Fax (707) 424-4537
DSN 837

Use the part number and complete description that follows:

Table 2-3. Marking Information

Part No.	Legend Or Symbol	Colors		Letter Or No. Size	Emblem Size
		Letter	BKGND		
3613001	NO SMOKING WITHIN 50 FEET (2 lines of copy as shown)	Silver	Red	4 in	10 in × 42 in
3613002	NO SMOKING WITHIN 50 FEET (1 line of copy as shown)	Silver	Red	4 in	5 in × 72 in
3613003	NO-SMOKING WITHIN 50 FEET (1 line of copy as shown)	Silver	Red	3 in	4 in × 60 in
3613004	FLAMMABLE	Red	Silver	6 in	7 in × 54 in
3613005	FLAMMABLE	Red	Silver	4 in	5 in × 36 in
3613006	FLAMMABLE (ARC)	Red	Silver	4 in	10 in × 66 in
3613007	NO SMOKING WITHIN 100 FEET (2 lines of copy as shown)	Silver	Red	6 in	14-1/2 in × 84 in
3613008	JET FUEL JP4	Silver	Red	6 in	7 in × 55 in
3613009	JET FUEL JP4	Silver	Red	4 in	5 in × 40 in
3613012	91/96	Silver	Red	4 in	5 in × 30 in
3613013	91/96	Silver	Red	6 in	7 in × 42 in
3613016	WATER-ALCOHOL	Silver	Red	6 in	7 in × 66 in
3613452	AMBULANCE (Die-cut pre-spaced)	Black	None	3 in	None
3613411	RED CROSS SYMBOL (Reflective Pre-masked)	Omaha White	Orange	3 in × 3 in	4 in × 4 in
3613412	RED CROSS SYMBOL (Reflective Pre-masked)	Omaha White	Orange	6 in × 6 in	8 in × 8 in
3613413	RED CROSS SYMBOL (Reflective Pre-masked)	Omaha White	Orange	18 in × l8 in	24 in × 24 in
3613414	US AIR FORCE (Die-cut Pre-spaced)	Black	None	1-1/2 in	None
3613415	Letter “A” (Die-cut pre-spaced)	Black	None	1-1/2 in	2 in × l.4 in
3613416	Letter “B” (Die-cut pre-spaced)	Black	None	1-1/2 in	2 in × l.4 in
3613417	Letter “C” (Die-cut pre-spaced)	Black	None	1-1/2 in	2 in × l.4 in
3613418	Letter “D” (Die-cut pre-spaced)	Black	None	1-1/2 in	2 in × 1.4 in
3613419	Letter “E” (Die-cut pre-spaced)	Black	None	1-1/2 in	2 in × l.4 in
3613420	Letter “F” (Die-cut pre-spaced)	Black	None	1-1/2 in	2 in × l.4 in
3613421	Letter “G” (Die-cut pre-spaced)	Black	None	1-1/2 in	2 in × l.4 in
3613422	Letter “H” (Die-cut pre-spaced)	Black	None	1-1/2 in	2 in × l.4 in
3613423	Letter “I” (Die-cut pre-spaced)	Black	None	1-1/2 in	2 in × l.4 in
3613424	Letter “J” (Die-cut pre-spaced)	Black	None	1-1/2 in	2 in × l.4 in
3613425	Letter “K” (Die-cut pre-spaced)	Black	None	1-1/2 in	2 in × l.4 in
3613426	Letter “L” (Die-cut pre-spaced)	Black	None	1-1/2 in	2 in × l.4 in
3613427	Letter “M” (Die-cut pre-spaced)	Black	None	1-1/2 in	2 in × l.4 in
3613428	Letter “N” (Die-cut pre-spaced)	Black	None	1-1/2 in	2 in × l.4 in
3613429	Letter “O” (Die-cut pre-spaced)	Black	None	1-1/2 in	2 in × l.4 in
3613430	Letter “P” (Die-cut pre-spaced)	Black	None	1-1/2 in	2 in × l.4 in
3613431	Letter “Q” (Die-cut pre-spaced)	Black	None	1-1/2 in	2 in × l.4 in

Table 2-3. Marking Information - Continued

Part No.	Legend Or Symbol	Colors		Letter Or No. Size	Emblem Size
		Letter	BKGND		
3613432	Letter “R” (Die-cut pre-spaced)	Black	None	1-1/2 in	2 in × l.4 in
3613433	Letter “S” (Die-cut pre-spaced)	Black	None	1-1/2 in	2 in × l.4 in
3613434	Letter “T” (Die-cut pre-spaced)	Black	None	1-1/2 in	2 in × l.4 in
3613435	Letter “U” (Die-cut pre-spaced)	Black	None	1-1/2 in	2 in × l.4 in
3613436	Letter “V” (Die-cut pre-spaced)	Black	None	1-1/2 in	2 in × l.4 in
3613437	Letter “W” (Die-cut pre-spaced)	Black	None	1-1/2 in	2 in × l.4 in
3613438	Letter “X” (Die-cut pre-spaced)	Black	None	1-1/2 in	2 in × l.4 in
3613439	Letter “Y” (Die-cut pre-spaced)	Black	None	1-1/2 in	2 in × l in
3613440	Letter “Z” (Die-cut pre-spaced)	Black	None	1-1/2 in	2 in × l.3 in
3613441	Number “1” (Die-cut pre-spaced)	Black	None	1-1/2 in	2 in × 1 in
3613442	Number “2” (Die-cut pre-spaced)	Black	None	1-1/2 in	2 in × l.3 in
3613443	Number “3” (Die-cut pre-spaced)	Black	None	1-1/2 in	2 in × l.3 in
3613444	Number “4” (Die-cut pre-spaced)	Black	None	1-1/2 in	2 in × l.3 in
3613445	Number “5” (Die-cut pre-spaced)	Black	None	1-1/2 in	2 in × l.3 in
3613446	Number “6” (Die-cut pre-spaced)	Black	None	1-1/2 in	2 in × l.3 in
3613447	Number “7” (Die-cut pre-spaced)	Black	None	1-1/2 in	2 in × l.3 in
3613448	Number “8” (Die-cut pre-spaced)	Black	None	1-1/2 in	2 in × l.3 in
3613449	Number “9” (Die-cut pre-spaced)	Black	None	1-1/2 in	2 in × 1.3 in
3613450	Number “0” (Die-cut pre-spaced)	Black	None	1-1/2 in	2 in × 1.3 in
3613451	FOR OFFICIAL USE ONLY (Die-cut pre-spaced)	Black	None	3/4 in	None
3613456	AMBULANCE (Mirror Image) (Die-cut pre-spaced)	Black	None	3 in	None
3613457	AMBULANCE (Mirror Image) (Reflective Die-cut pre-spaced)	Silver	None	1-1/2 in	
3613458	POLICE (die-cut pre-spaced)	Blue	None	7 in	
3613459	POLICE (die-cut pre-spaced)	Blue	None	4 in	
3613460	FOR OFFICIAL USE ONLY (die-cut pre-spaced)	Blue	None	1 in	
3613461	Letter “B” (die-cut pre-spaced)	Blue	None	1 in	
3613462	Number “1” (die-cut pre-spaced)	Blue	None	1 in	
3613463	Number “2” (die-cut pre-spaced)	Blue	None	1 in	
3613464	Number “3” (die-cut pre-spaced)	Blue	None	1 in	
3613465	Number “4” (die-cut pre-spaced)	Blue	None	1 in	
3613466	Number “5” (die-cut pre-spaced)	Blue	None	1 in	
3613467	Number “6” (die-cut pre-spaced)	Blue	None	1 in	
3613468	Number “7” (die-cut pre-spaced)	Blue	None	1 in	
3613469	Number “8” (die-cut pre-spaced)	Blue	None	1 in	
3613470	Number “9” (die-cut pre-spaced)	Blue	None	1 in	
3613471	Number “0” (die-cut pre-spaced)	Blue	None	1 in	
3613472	BADGE SECURITY POLICE (reflectorized)	Blue	None	1 in	
3613017	WATER-ALCOHOL NATO SYMBOL S738 (2 lines of copy as shown)	Black	Silver	1/2 in	2 in × 9-1/2 in

Table 2-3. Marking Information - Continued

Part No.	Legend Or Symbol	Colors		Letter Or No. Size	Emblem Size
		Letter	BKGND		
3613018	OPEN MANHOLE COVERS WHEN PUMPING FUEL OIL OR WATER AT TEMPERATURES BELOW 25 °F (4 lines of copy)	Silver	Red	2 in	10 in × 36 in
3613019	OIL ACFT ENG	Silver	Red	3 in	4 in × 36 in
3613020	OIL ACFT ENG	Silver	Red	4 in	5 in × 48 in
3613021	KEROSENE	Silver	Red	4 in	5 in × 30 in
3613022	KEROSENE	Silver	Red	6 in	7 in × 48 in
3613025	DIESEL FUEL	Silver	Red	3 in	4 in × 36 in
3613026	DIESEL FUEL	Silver	Red	4 in	5 in × 42 in
3613027	MOGAS	Silver	Red	3 in	4 in × 18 in
3613028	MOGAS	Silver	Red	4 in	5 in × 24 in
3613029	N_2O_4 CLASS A POISON (2 lines of copy as shown)	Blue	Silver	6 in	14 in × 72 in
3613032	WARNING: TRANSFER FROM LINE OR CONTAINER IDENTIFIED BY NAME OF ALCOHOL REQUIRED. REFER TO TECHNICAL ORDERS 2-1-14 AND 36A9-3-12-1 FOR WATER-ALCOHOL MIXING AND TESTING DATA. (5 lines of copy as shown)	Black	Silver	1/8 in	2 in × 5 in
3613041	EXPLOSIVES A	Red	Silver	6 in	8 in × 60 in
3613042	EXPLOSIVES B	Red	Silver	6 in	8 in × 60 in
3613043	POISON	Blue	Silver	4 in	6 in × 30 in
3613044	OXIDIZERS	Yellow	Black	4 in	6 in × 34 in
3613045	V (Water-Alcohol Chevron)	Black	Silver	3/4 in × 5 in × 7 in	6 in × 8 in
3613046	COMPRESSED GAS (2 lines of copy)	Green	Silver	4 in	11 in × 36 in
3013047	CORROSIVES	Blue	Silver	4 in	6 in × 36 in
3613048	RADIOACTIVE	black	Yellow	4 in	6 in × 36 in
3613049	DANGEROUS	Red	Silver	4 in	6 in × 36 in
3613050	CARGO FIRE-AVOID WATER	Red	Silver	2 in	6 in × 36 in
3613051	SECURITY POLICE (1 line of copy as shown)	Blue	Silver	2 in	4 in × 24 in
3613053	RED CROSS SYMBOL (Reflect pre-masked)	Red	White	3 in × 3 in	4 in × 4 in
3613054	RED CROSS SYMBOL (Reflect pre-masked)	Red	White	6 in × 6 in	8 in × 8 in
3613055	RED CROSS SYMBOL (Reflect pre-masked)	Red	White	8 in × 8 in	10-3/4 in × 10-3/4 in
3613056	RED CROSS SYMBOL (Reflect pre-masked)	Red	White	18 in × 18 in	24 in × 24 in
3613057	RED CROSS SYMBOL (Non-Reflect pre-masked)	Red	White	36 in × 36 in	48 in × 48 in
3616058	RED CROSS SYMBOL (Reflective pre-masked)	Red	White	36 in × 36 in	48 in × 48 in
3613060	FOR OFFICIAL USE ONLY	Silver	Red	3/4 in	1-1/4 in × 15 in
3613061	U.S. AIR FORCE	Silver	Red	1-1/2 in	3 in × 21 in

Table 2-3. Marking Information - Continued

Part No.	Legend Or Symbol	Colors		Letter Or No. Size	Emblem Size
		Letter	BKGND		
3613065	U.S. AIR FORCE	Silver	Red	1-1/2 in	None
3613062	U.S. AIR FORCE (Die-cut pre-spaced)	Yellow	None	1-1/2 in	None
3613063	ALERT FORCE	Blue	Yellow	2-1/2 in	3-1/2 in × 26 in
3613066	FOR OFFICIAL USE ONLY (Die-cut pre-spaced)	Silver	None	3/4 in	None
3613064	FOR OFFICIAL USE ONLY (Die-cut)	Yellow	None	3/4 in	None
3613080	OXYGEN	Yellow	Black	3 in	5 in × 22 in
3613067	LIQUID OXYGEN	Yellow	Black	4 in	6 in × 36 in
3613081	NITROGEN	Green	Silver	3 in	5 in × 24 in
3613068	LIQUID NITROGEN	Green	Silver	4 in	6 in × 40 in
3613069	CAUTION	Silver	Red	4 in	6 in × 22 in
3613082	FLAMMABLE GAS (2 lines of copy as shown)	Red	Silver	4 in	11 in × 36 in
3613103	AMBULANCE (Reflective die-cut pre-spaced)	Silver	None	3 in	None
NOTE: The following are supplied in ten identical characters per package.					
3613132	Letter “A”	Silver	Red	1-1/2 in	2 in × 1.4 in
3613133	Letter “H”	Silver	Red	1-1/2 in	2 in × l.4 in
3613134	Letter “C”	Silver	Red	1-1/2 in	2 in × l.4 in
3613135	Letter “D”	Silver	Red	1-1/2 in	2 in × l.4 in
3613136	Letter “E”	Silver	Red	1-1/2 in	2 in × l.4 in
3613137	Letter “F”	Silver	Red	1-1/2 in	2 in × l.4 in
3613138	Letter “G”	Silver	Red	1-1/2 in	2 in × l.4 in
3613139	Letter “H”	Silver	Red	1-1/2 in	2 in × l.4 in
3613140	Letter “I”	Silver	Red	1-1/2 in	2 in × l.4 in
3613141	Letter “J”	Silver	Red	1-1/2 in	2 in × l.4 in
3613142	Letter “K”	Silver	Red	1-1/2 in	2 in × l.4 in
3613143	Letter “L”	Silver	Red	1-1/2 in	2 in × l.4 in
3613144	Letter “M”	Silver	Red	1-1/2 in	2 in × l.4 in
3613145	Letter “N”	Silver	Red	1-1/2 in	2 in × l.4 in
3613146	Letter “O”	Silver	Red	1-1/2 in	2 in × l.4 in
3613147	Letter “P”	Silver	Red	1-1/2 in	2 in × l.4 in
3613148	Letter “Q”	Silver	Red	1-1/2 in	2 in × l.4 in
3613149	Letter “R”	Silver	Red	1-1/2 in	2 in × l.4 in
3613150	Letter “S”	Silver	Red	1-1/2 in	2 in × l.4 in
3613151	Letter “T”	Silver	Red	1-1/2 in	2 in × l.4 in
3613152	Letter “U”	Silver	Red	1-1/2 in	2 in × l.4 in
3613153	Letter “V”	Silver	Red	1-1/2 in	2 in × l.4 in
3613154	Letter “W”	Silver	Red	1-1/2 in	2 in × l.4 in
3613155	Letter “X”	Silver	Red	1-1/2 in	2 in × l.4 in
3613156	Letter “Y”	Silver	Red	1-1/2 in	2 in × l.4 in
3613157	Letter “Z”	Silver	Red	1-1/2 in	2 in × l.4 in
3613158	Letter “A” (die-cut pre-spaced)	Yellow	None	1-1/2 in	2 in × l.4 in
3613159	Letter “B” (die-cut pre-spaced)	Yellow	None	1-1/2 in	2 in × l.4 in
3613160	Letter “C” (die-cut pre-spaced)	Yellow	None	1-1/2 in	2 in × l.4 in
3613161	Letter “D” (die-cut pre-spaced)	Yellow	None	1-1/2 in	2 in × l.4 in

Table 2-3. Marking Information - Continued

Part No.	Legend Or Symbol	Colors		Letter Or No. Size	Emblem Size
		Letter	BKGND		
3613162	Letter “E” (die-cut pre-spaced)	Yellow	None	1-1/2 in	2 in × l.4 in
3613163	Letter “F” (die-cut pre-spaced)	Yellow	None	1-1/2 in	2 in × l.4 in
3613164	Letter “G” (die-cut pre-spaced)	Yellow	None	1-1/2 in	2 in × l.4 in
3613165	Letter “H” (die-cut pre-spaced)	Yellow	None	1-1/2 in	2 in × l.4 in
3613166	Letter “I” (die-cut pre-spaced)	Yellow	None	1-1/2 in	2 in × l.4 in
3613167	Letter “J” (die-cut pre-spaced)	Yellow	None	1-1/2 in	2 in × l.4 in
3613168	Letter “K” (die-cut pre-spaced)	Yellow	None	1-1/2 in	2 in × l.4 in
3613169	Letter “L” (die-cut pre-spaced)	Yellow	None	1-1/2 in	2 in × l.4 in
3613170	Letter “M” (die-cut pre-spaced)	Yellow	None	1-1/2 in	2 in × l.4 in
3613171	Letter “N” (die-cut pre-spaced)	Yellow	None	1-1/2 in	2 in × l.4 in
3613172	Letter “”O (die-cut pre-spaced)	Yellow	None	1-1/2 in	2 in × l.4 in
3613173	Letter “P” (die-cut pre-spaced)	Yellow	None	1-1/2 in	2 in × l.4 in
3613174	Letter “Q” (die-cut pre-spaced)	Yellow	None	1-1/2 in	2 in × l.4 in
3613175	Letter “R” (die-cut pre-spaced)	Yellow	None	1-1/2 in	2 in × l.4 in
3613176	Letter “S” (die-cut pre-spaced)	Yellow	None	1-1/2 in	2 in × l.4 in
3613177	Letter “T” (die-cut pre-spaced)	Yellow	None	1-1/2 in	2 in × l.4 in
3613178	Letter “U” (die-cut pre-spaced)	Yellow	None	1-1/2 in	2 in × l.4 in
3613179	Letter “V” (die-cut pre-spaced)	Yellow	None	1-1/2 in	2 in × l.4 in
3613180	Letter “W” (die-cut pre-spaced)	Yellow	None	1-1/2 in	2 in × l.4 in
3613181	Letter “X” (die-cut pre-spaced)	Yellow	None	1-1/2 in	2 in × l.4 in
3613182	Letter “Y” (die-cut pre-spaced)	Yellow	None	1-1/2 in	2 in × l.4 in
3613183	Letter “Z” (die-cut pre-spaced)	Yellow	None	1-1/2 in	2 in × l.4 in
3613184	Letter “A” (die-cut pre-spaced)	Silver	None	1-1/2 in	2 in × l.4 in
3613185	Letter “B” (die-cut pre-spaced)	Silver	None	1-1/2 in	2 in × l.4 in
3613186	Letter “C” (die-cut pre-spaced)	Silver	None	1-1/2 in	2 in × l.4 in
3613187	Letter “D” (die-cut pre-spaced)	Silver	None	1-1/2 in	2 in × l.4 in
3613188	Letter “E” (die-cut pre-spaced)	Silver	None	1-1/2 in	2 in × 1.4 in
3613189	Letter “F” (die-cut pre-spaced)	Silver	None	1-1/2 in	2 in × 1.4 in
3613190	Letter “G” (die-cut pre-spaced)	Silver	None	1-1/2 in	2 in × 1.4 in
3613191	Letter “H” (die-cut pre-spaced)	Silver	None	1-1/2 in	2 in × 1.4 in
3613192	Letter “I” (die-cut pre-spaced)	Silver	None	1-1/2 in	2 in × 1.4 in
3613193	Letter “J” (die-cut pre-spaced)	Silver	None	1-1/2 in	2 in × 1.4 in
3613194	Letter “K” (die-cut pre-spaced)	Silver	None	1-1/2 in	2 in × 1.4 in
3613195	Letter “L” (die-cut pre-spaced)	Silver	None	1-1/2 in	2 in × l.4 in
3613196	Letter “M” (die-cut pre-spaced)	Silver	None	1-1/2 in	2 in × l.4 in
3613197	Letter “N” (die-cut pre-spaced)	Silver	None	1-1/2 in	2 in × l.4 in
3613198	Letter “O” (die-cut pre-spaced)	Silver	None	1-1/2 in	2 in × l.4 in
3613199	Letter “P” (die-cut pre-spaced)	Silver	None	1-1/2 in	2 in × l.4 in
3613200	Letter “Q” (die-cut pre-spaced)	Silver	None	1-1/2 in	2 in × l.4 in
3613201	Letter “R” (die-cut pre-spaced)	Silver	None	1-1/2 in	2 in × l.4 in
3613202	Letter “S” (die-cut pre-spaced)	Silver	None	1-1/2 in	2 in × l.4 in
3613203	Letter “T” (die-cut pre-spaced)	Silver	None	1-1/2 in	2 in × l.4 in
3613204	Letter “U” (die-cut pre-spaced)	Silver	None	1-1/2 in	2 in × l.4 in
3613205	Letter “V” (die-cut pre-spaced)	Silver	None	1-1/2 in	2 in × l.4 in
3613206	Letter “W” (die-cut pre-spaced)	Silver	None	1-1/2 in	2 in × 1.4 in
3613207	Letter “X” (die-cut pre-spaced)	Silver	None	1-1/2 in	2 in × l.4 in

Table 2-3. Marking Information - Continued

Part No.	Legend Or Symbol	Colors		Letter Or No. Size	Emblem Size
		Letter	BKGND		
3613208	Letter “Y” (die-cut pre-spaced)	Silver	None	1-1/2 in	2 in × 1.4 in
3613209	Letter “Z” (die-cut pre-spaced)	Silver	None	3 in	4 in × 2.8 in
3613210	Letter “A”	Silver	Red	3 in	4 in × 2.8 in
3613211	Letter “B”	Silver	Red	3 in	4 in × 2.8 in
3613212	Letter “C”	Silver	Red	3 in	4 in × 2.8 in
3613213	Letter “D”	Silver	Red	3 in	4 in × 2.8 in
3613214	Letter “E”	Silver	Red	3 in	4 in × 2.8 in
3613215	Letter “F”	Silver	Red	3 in	4 in × 2.8 in
3613216	Letter “G”	Silver	Red	3 in	4 in × 2.8 in
3613217	Letter “H”	Silver	Red	3 in	4 in × 2.8 in
3613218	Letter “I”	Silver	Red	3 in	4 in × 2.8 in
3613219	Letter “J”	Silver	Red	3 in	4 in × 2.8 in
3613220	Letter “K”	Silver	Red	3 in	4 in × 2.8 in
3613221	Letter “L”	Silver	Red	3 in	4 in × 2.8 in
3613222	Letter “M”	Silver	Red	3 in	4 in × 2.8 in
3613223	Letter “N”	Silver	Red	3 in	4 in × 2.8 in
3613224	Letter “O”	Silver	Red	3 in	4 in × 2.8 in
3613225	Letter “P”	Silver	Red	3 in	4 in × 2.8 in
3613226	Letter “Q”	Silver	Red	3 in	4 in × 2.8 in
3613227	Letter “R”	Silver	Red	3 in	4 in × 2.8 in
3613228	Letter “S”	Silver	Red	3 in	4 in × 2.8 in
3613229	Letter “T”	Silver	Red	3 in	4 in × 2.8 in
3613230	Letter “U”	Silver	Red	3 in	4 in × 2.8 in
3613231	Letter “V”	Silver	Red	3 in	4 in × 2.8 in
3613232	Letter “W”	Silver	Red	3 in	4 in × 2.8 in
3613233	Letter “X”	Silver	Red	3 in	4 in × 2.8 in
3613234	Letter “Y”	Silver	Red	3 in	4 in × 2.8 in
3613235	Letter “Z”	Silver	Red	3 in	4 in × 2.8 in
3613236	Letter “A”	Silver	Red	4 in	6 in × 3.3 in
3613237	Letter “B”	Silver	Red	4 in	6 in × 3.3 in
3613238	Letter “C”	Silver	Red	4 in	6 in × 3.3 in
3613239	Letter “D”	Silver	Red	4 in	6 in × 3.3 in
3613240	Letter “E”	Silver	Red	4 in	6 in × 3.3 in
3613241	Letter “F”	Silver	Red	4 in	6 in × 3.3 in
3613242	Letter “G”	Silver	Red	4 in	6 in × 3.3 in
3613243	Letter “H”	Silver	Red	4 in	6 in × 3.3 in
3613244	Letter “I”	Silver	Red	4 in	6 in × 3.3 in
3613245	Letter “J”	Silver	Red	4 in	6 in × 3.3 in
3613246	Letter “K”	Silver	Red	4 in	6 in × 3.3 in
3613247	Letter “L”	Silver	Red	4 in	6 in × 3.3 in
3613248	Letter “M”	Silver	Red	4 in	6 in × 3.3 in
3613249	Letter “N”	Silver	Red	4 in	6 in × 3.3 in
3613250	Letter “O”	Silver	Red	4 in	6 in × 3.3 in
3613251	Letter “P”	Silver	Red	4 in	6 in × 3.3 in
3613252	Letter “Q”	Silver	Red	4 in	6 in × 3.3 in
3613253	Letter “R”	Silver	Red	4 in	6 in × 3.3 in

Table 2-3. Marking Information - Continued

Part No.	Legend Or Symbol	Colors		Letter Or No. Size	Emblem Size
		Letter	BKGND		
3613254	Letter “S”	Silver	Red	4 in	6 in × 3.3 in
3613255	Letter “T”	Silver	Red	4 in	6 in × 3.3 in
3613256	Letter “U”	Silver	Red	4 in	6 in × 3.3 in
3613257	Letter “V”	Silver	Red	4 in	6 in × 3.3 in
3613258	Letter “W”	Silver	Red	4 in	6 in × 3.3 in
3613259	Letter “X”	Silver	Red	4 in	6 in × 3.3 in
3613260	Letter “Y”	Silver	Red	4 in	6 in × 3.3 in
3613261	Letter “Z”	Silver	Red	4 in	6 in × 3.3 in
3613262	Letter “A”	Silver	Red	4 in	8 in × 5.6 in
3613263	Letter “B”	Silver	Red	4 in	8 in × 5.6 in
3613264	Letter “C”	Silver	Red	4 in	8 in × 5.6 in
3613265	Letter “D”	Silver	Red	4 in	8 in × 5.6 in
3613266	Letter “E”	Silver	Red	4 in	8 in × 5.6 in
3613267	Letter “F”	Silver	Red	4 in	8 in × 5.6 in
3613268	Letter “G”	Silver	Red	4 in	8 in × 5.6 in
3613269	Letter “H”	Silver	Red	4 in	8 in × 5.6 in
3613270	Letter “I”	Silver	Red	4 in	8 in × 5.6 in
3613271	Letter “J”	Silver	Red	4 in	8 in × 5.6 in
3613272	Letter “K”	Silver	Red	4 in	8 in × 5.6 in
3613273	Letter “L”	Silver	Red	4 in	8 in × 5.6 in
3613274	Letter “M”	Silver	Red	4 in	8 in × 5.6 in
3613275	Letter “N”	Silver	Red	4 in	8 in × 5.6 in
3613276	Letter “O”	Silver	Red	4 in	8 in × 5.6 in
3613277	Letter “P”	Silver	Red	4 in	8 in × 5.6 in
3613278	Letter “Q”	Silver	Red	4 in	8 in × 5.6 in
3613279	Letter “R”	Silver	Red	4 in	8 in × 5.6 in
3613280	Letter “S”	Silver	Red	4 in	8 in × 5.6 in
3613281	Letter “T”	Silver	Red	4 in	8 in × 5.6 in
3613282	Letter “U”	Silver	Red	4 in	8 in × 5.6 in
3613283	Letter “V”	Silver	Red	4 in	8 in × 5.6 in
3613284	Letter “W”	Silver	Red	4 in	8 in × 5.6 in
3613285	Letter “X”	Silver	Red	4 in	8 in × 5.6 in
3613286	Letter “Y”	Silver	Red	4 in	8 in × 5.6 in
3613287	Letter “Z”	Silver	Red	4 in	8 in × 5.6 in
3613330	Number “1” (die-cut pre-spaced)	Silver	None	1-1/2 in	8 in × 5.6 in
3613331	Number “2” (die-cut pre-spaced)	Silver	None	1-1/2 in	2 in × l.3 in
3613332	Number “3” (die-cut pre-spaced)	Silver	None	1-1/2 in	2 in × l.3 in
3613333	Number “4” (die-cut pre-spaced)	Silver	None	1-1/2 in	2 in × l.3 in
3613334	Number “5” (die-cut pre-spaced)	Silver	None	1-1/2 in	2 in × l.3 in
3613335	Number “6” (die-cut pre-spaced)	Silver	None	1-1/2 in	2 in × l.3 in
3613336	Number “7” (die-cut pre-spaced)	Silver	None	1-1/2 in	2 in × l.3 in
3613337	Number “8” (die-cut pre-spaced)	Silver	None	1-1/2 in	2 in × l.3 in
3613338	Number “9” (die-cut pre-spaced)	Silver	None	1-1/2 in	2 in × l.3 in
3613339	Number “0” (die-cut pre-spaced)	Silver	None	1-1/2 in	2 in × l.3 in
3613340	Number “1” (die-cut pre-spaced)	Yellow	None	1-1/2 in	2 in × l.3 in
3613341	Number “2” (die-cut pre-spaced)	Yellow	None	1-1/2 in	2 in × l.3 in

Table 2-3. Marking Information - Continued

Part No.	Legend Or Symbol	Colors		Letter Or No. Size	Emblem Size
		Letter	BKGND		
3613342	Number “3” (die-cut pre-spaced)	Yellow	None	1-1/2 in	2 in × l.3 in
3613343	Number “4” (die-cut pre-spaced)	Yellow	None	1-1/2 in	2 in × l.3 in
3613344	Number “5” (die-cut pre-spaced)	Yellow	None	1-1/2 in	2 in × l.3 in
3613345	Number “6” (die-cut pre-spaced)	Yellow	None	1-1/2 in	2 in × l.3 in
3613346	Number “7” (die-cut pre-spaced)	Yellow	None	1-1/2 in	2 in × l.3 in
3613347	Number “8” (die-cut pre-spaced)	Yellow	None	1-1/2 in	2 in × l.3 in
3613348	Number “9” (die-cut pre-spaced)	Yellow	None	1-1/2 in	2 in × l.3 in
3613349	Number “0” (die-cut pre-spaced)	Yellow	None	1-1/2 in	2 in × l.3 in
3613350	Number “1”	Silver	Red	1-1/2 in	2 in × l.3 in
3613351	Number “2”	Silver	Red	1-1/2 in	2 in × l.3 in
3613352	Number “3”	Silver	Red	1-1/2 in	2 in × l.3 in
3613353	Number “4”	Silver	Red	1-1/2 in	2 in × l.3 in
3613354	Number “5”	Silver	Red	1-1/2 in	2 in × l.3 in
3613355	Number “6”	Silver	Red	1-1/2 in	2 in × l.3 in
3613356	Number “7”	Silver	Red	1-1/2 in	2 in × l.3 in
3613357	Number “8”	Silver	Red	1-1/2 in	2 in × l.3 in
3613358	Number “9”	Silver	Red	1-1/2 in	2 in × l.3 in
3613359	Number “0”	Silver	Red	1-1/2 in	2 in × l.3 in
3613360	Number “1”	Silver	Red	3 in	4 in × 2.6 in
3613361	Number “2”	Silver	Red	3 in	4 in × 2.6 in
3613362	Number “3”	Silver	Red	3 in	4 in × 2.6 in
3613363	Number “4”	Silver	Red	3 in	4 in × 2.6 in
3613364	Number “5”	Silver	Red	3 in	4 in × 2.6 in
3613365	Number “6”	Silver	Red	3 in	4 in × 2.6 in
3613366	Number “7”	Silver	Red	3 in	4 in × 2.6 in
3613367	Number “8”	Silver	Red	3 in	4 in × 2.6 in
3613368	Number “9”	Silver	Red	3 in	4 in × 2.6 in
3613369	Number “0”	Silver	Red	3 in	4 in × 2.6 in
3613370	Number “1”	Silver	Red	4 in	6 in × 3.3 in
3613371	Number “2”	Silver	Red	4 in	6 in × 3.3 in
3613372	Number “3”	Silver	Red	4 in	6 in × 3.3 in
3613373	Number “4”	Silver	Red	4 in	6 in × 3.3 in
3613374	Number “5”	Silver	Red	4 in	6 in × 3.3 in
3613376	Number “6”	Silver	Red	4 in	6 in × 3.3 in
3613376	Number “7”	Silver	Red	4 in	6 in × 3.3 in
3613377	Number “8”	Silver	Red	4 in	6 in × 3.3 in
3613378	Number “9”	Silver	Red	4 in	6 in × 3.3 in
3613379	Number “0”	Silver	Red	4 in	6 in × 3.3 in
3613380	Number “1”	Silver	Red	6 in	8 in × 5.2 in
3613381	Number “2”	Silver	Red	6 in	8 in × 5.2 in
3613382	Number “3”	Silver	Red	6 in	8 in × 5.2 in
3613383	Number “4”	Silver	Red	6 in	8 in × 5.2 in
3613384	Number “5”	Silver	Red	6 in	8 in × 5.2 in
3613385	Number “6”	Silver	Red	6 in	8 in × 5.2 in
3613386	Number “7”	Silver	Red	6 in	8 in × 5.2 in
3613387	Number “8”	Silver	Red	6 in	8 in × 5.2 in

Table 2-3. Marking Information - Continued

Part No.	Legend Or Symbol	Colors		Letter Or No. Size	Emblem Size
		Letter	BKGND		
3613388	Number “9”	Silver	Red	6 in	8 in × 5.2 in
3613389	Number “0”	Silver	Red	6 in	8 in × 5.2 in
3613393	100-130	Silver	Purple	4 in	5 in × 30 in
3613394	100-130	Silver	Purple	6 in	7 in × 42 in
3613395	115-145	Silver	Purple	4 in	5 in × 30 in
3613396	115-145	Silver	Purple	6 in	7 in × 42 in
3613397	AVGAS	Silver	Purple	4 in	5 in × 24 in
3613398	AVGAS	Silver	Purple	6 in	7 in × 32 in
3613399	“F”	Silver	Purple	4 in	6 in × 3.3 in
3613400	“F”	Silver	Purple	6 in	8 in × 5.6 in
3613401	“2”	Silver	Purple	4 in	6 in × 3.3 in
3613402	“2”	Silver	Purple	6 in	8 in × 5.6 in
3613403	“1”	Silver	Purple	4 in	6 in × 3.3 in
3613404	“1”	Silver	Purple	6 in	8 in × 5.6 in
3613405	“8”	Silver	Purple	4 in	6 in × 3.3 in
3613406	“8”	Silver	Purple	6 in	8 in × 5.6 in
9275871-01	Number “0” (die-cut pre-spaced)	Blue	None	1 1/2 in	
9275871-03	Number “1” (die-cut pre-spaced)	Blue	None	1 1/2 in	
9275871-05	Number “2” (die-cut pre-spaced)	Blue	None	1 1/2 in	
9276871-07	Number “3” (die-cut pre-spaced)	Blue	None	1 1/2 in	
9275871-11	Number “4” (die-cut pre-spaced)	Blue	None	1 1/2 in	
9276871-13	Number “5” (die-cut pre-spaced)	Blue	None	1 1/2 in	
9276871-16	Number “6” (die-cut pre-spaced)	Blue	None	1 1/2 in	
9275871-17	Number “7” (die-cut pre-spaced)	Blue	None	1 1/2 in	
9275871-21	Number “8” (die-cut pre-spaced)	Blue	None	1 1/2 in	
9275871-23	Number “9” (die-cut pre-spaced)	Blue	None	1 1/2 in	
9275871-25	Letter “B” (die-cut pre-spaced)	Blue	None	1 1/2 in	
9275871-27	Letter “C” (die-cut pre-spaced)	Blue	None	1 1/2 in	
NOTE: The following Manhole Cover Markings are available in 2 in × 6 in identical legends with symbols:					
3613407	AVGAS 115/145 F-22	Silver	Purple		
3613408	AVGAS 100/130F-18	Silver	Purple		
3613409	JP-4 F-40	Silver	Red		
3613410	JP-5 F-44	Silver	Red		
3613070	AVOIL D-l100 0-128	Black	Silver		
3613071	AVOIL D-1055 0-123	Black	Silver		
3613037	AVOIL 1100 0-117	Black	Silver		
3613038	AVOIL 1065 0-113	Black	Silver		
3613039	AVOIL 10100-132	Black	Silver		
3613040	AVOIL 1005 0-132	Black	Silver		
93104808	JP-8 F-34	Black	Red		

2.90.3 The following decals are requisition for compliance with this technical order. Requisition decals from:

DAPS Travis
400 Burgan Blvd., Bldg 3
Travis AFB, CA 94535
Voice (707) 424-0770
Fax (707) 424-4537
DSN 837

Table 2-4. Decal Information

Part No.	Legend Or Symbol	Emblem Size
3613101	Airdrome Traffic Signals	2-3/4 in × 3 in
3612102	MPH to KPH	2 in × 3 in
3613500	**CAUTION** BEFORE TOWING LATCH PINTLE CLOSE TRIPLOCK INSTALL LOCK PIN	3-1/2 in × 4-1/2 inch
3613502	**WARNING** DO NOT EXCEED 100 PSI IN HALON SUPPLY CYLINDER DURING TRANSFER OPERATION. OVER PRESSURIZATION OF SUPPLY CYLINDER MAY CAUSE FAILURE OF TANK RESULTING IN INJURY OR DEATH.	5-1/2 in × 3-1/2 in
3613505	Air Force A Great Way of Life	7 ft 6 in × 6 in
3613506 (toned down)	**CAUTION** BEFORE TOWING LATCH PINTLE CLOSE TRIPLOCK INSTALL LOCK PIN	3-1/2 in × 4-1/2 in
3613510 NHTSA	15 Passenger Van	

2.90.4 The following Modular Ambulance Decals can be obtained from:

Wheeled Coach
2778 Coach N. Forsyth Road
Winter Park, FL 32792
(407) 677-7777

Table 2-5. Modular Ambulance Decal Information

Part No.	Location	Insignia	Size
AS 71212	COMPARTMENT BODY (TOP)	RED CROSS	36 in
AS 71208	COMPARTMENT BODY (SIDE)	RED CROSS	16 in
AS 71211	REAR OF VEHICLE	RED CROSS	6 in
AS 71003	COMPARTMENT BODY (SIDE)	STAR OF LIFE	16 in
AS 71006	REAR OF VEHICLE	STAR OF LIFE	12 in
AS 71001	FRONT HOOD-ABOVE GRILLE	STAR OF LIFE	4 in
AS 71205	COMPARTMENT BODY (SIDE)	“AMBULANCE”	6 in
AS 71210	REAR OF VEHICLE	“AMBULANCE”	4 in
AS 71009	FRONT HOOD-ABOVE GRILLE	AMBULANCE (MIRROR IMAGE)	4 in

2.91 LIGHTING REQUIREMENTS.

The lighting and signaling devices prescribed in this technical order provide the minimum electrical directional signaling devices, and requirements for vehicles. Reflective markings for trailers (trailer conspicuity).

2.91.1 All electrical devices shall conform to State and Federal Highway Administration Motor Carrier Safety Regulations. When local, state or foreign country regulations conflict with this technical order, those pertinent regulations prevailing will take precedence. These requirements apply to vehicles operated on and off base. All trailers having an overall width of 80 inches or more and a gross weight rating of more than 10,000 pounds will be marked with a minimum of 2-inch red and white prismatic 980 reflective sheeting, Federal Specifications ASTM D4956, Type IV, Class 1 (Figure 2-29). Current standards for trailer vans and trailers can be found in 49 CFR parts 393.13 and 571.108.

2.91.2 All off-base operated vehicles included in the OLVIMS management code table will be equipped with the electrical directional signaling, lighting, and reflector devices prescribed by this technical order.

2.91.3 The following legends represent the lights, reflectors, and markers which may be required on all types of vehicular equipment:

2.91.3.1 Head Lamp.

2.91.3.2 Red Tail Light.

2.91.3.3 Red or Amber Stop Light.

2.91.3.4 Red Clearance Lamp.

2.91.3.5 Amber Clearance Light.

2.91.3.6 Red Side Marker.

2.91.3.7 Amber Side Marker.

2.91.3.8 Red Reflector.

2.91.3.9 Amber Reflector.

2.91.4 Lighting and reflector equipment over and above that indicated in the preceding paragraph may be installed to meet local conditions and state regulations.

NOTE

Head lamp units incorporating left way shift characteristics shall be installed on vehicles to satisfy local condition requirements in areas where a left hand traffic pattern prevails.

2.92 SPECIAL DATA.

2.92.1 Directional Signaling Devices. Electric directional signaling devices should be mounted on the front rear and rear of the vehicle, or combination of vehicles, near the extreme and outermost corners. They should be mounted not less than 24 inches and not more than 60 inches above ground level. Color of devices will be yellow or amber on the front and red or amber on the rear. Location and color of directional signaling devices which have been factory installed on new vehicles will not be changed to comply with this technical order; however, it all cases, local, state regulations will be adhered to.

2.92.2 Reflectors. All reflectors will be in accordance with Ordnance drawing number B161059. Reflector installation on vehicles will not exceed a height of 60 inches and should not be less than 24 inches above the ground on which the vehicle stands. On vehicles which are so constructed as to make compliance with the 24-inch requirement impractical, lower mountings may be used.

NOTE

All devices should be illuminated and should be visible, both day and night, at a distance of 100 feet.

2.93 TRAILER LIGHTING CABLES.

2.93.1 Lighting connectors are not generally furnished with vehicles of the 1/2 to 1-1/2 ton capacity. Since comparatively few of these vehicles ever tow trailers off base, or trailers which require lights, it is not considered to be economically sound. Installation of lighting connectors on these vehicles may be accomplished by the using activity.

2.93.2 The new SAE-ATA seven circuit cables, plugs and sockets are coded by either numbers or colors. The SAE-ATA wiring code, which follows, should be used when installing the new components:

Conductor Wire
No. Color Circuit
1 White Ground
2 Black Clearance Lights
3 Yellow Left Turn Light
4 Red Stop Lights
5 Green Right Turn Light
6 Brown Tail Light Blue Auxiliary Circuit
7 Blue Auxiliary Circuit

Since many semi-trailers are equipped with compartment lights, spot lights, etc., the number 7 or blue auxiliary circuit should be used for this purpose.

2.94 SPOT LIGHTS.

If required by operating officials, spot lights can be installed on vehicles to meet local operational conditions or to comply with existing regulatory requirements. When installed it must be mounted on the vehicle centerline directly over the windshield head section with an inside control readily accessible to the driver.

2.95 MATERIEL MANAGEMENT.

Parts necessary for lighting and reflector requirements for off base operation not available in local materiel management will be requisitioned through regular materiel management channels, since requirements are based on local conditions and available types of vehicles cannot be predetermined.

2.96 WARNING OR INDICATING LIGHTS.

Emergency Vehicles (i.e., fire trucks, flight safety, air field management and base disaster mobile command post vehicles) shall use the revolving flasher type light of aviation red.

2.96.1 The color of the revolving light used on Security Police Vehicles will conform to the color specified for police vehicles in the traffic code of the state in which the installation is located.

2.96.2 Metropolitan and van type ambulances shall use a revolving flasher light with a clear lens incorporating 4 bulbs alternating lens colors, two red and two white. Station wagon and field type ambulances designated for general ambulance service will continue to use the red revolving flasher light. Those station wagon and field ambulances designated as “EMERGENCY USE” may be equipped with the same revolving flasher light as authorized for van type and metropolitan ambulances.

2.96.3 Other vehicles, which are authorized to operate on the apron, taxiways, and runways (i.e., maintenance vehicles, and alert/reflex trucks) will be equipped with the hazard warning lights (four way flashers) as required by the Department of Transportation or a revolving pulsating type light of

aviation yellow. The pulsating yellow light is optional on those vehicles that are equipped with the four way flashing hazard warning lights.

2.96.4 General purpose vehicles which rarely operate on the apron and taxiway areas at night (i.e., staff cars, buses, and station wagons) may be equipped with aviation yellow magnetic based caution lights at the discretion of the local commander.

2.96.5 Snowplows and Emergency Arresting Barrier Vehicles shall use the revolving flasher type light with amber/yellow or blue globe. Light must be capable of emitting no less than 40 nor more than 400 candle power. Rotation will be such as to emit at least 90 flashes per minute and be visible through a 360-degree radius.

2.96.6 Lighting equipment over and above that indicated in the preceding paragraphs may be installed to meet local conditions and state/local regulations.

NOTE

Warning lights will not be permanently affixed to Security Police, alert/reflex, fire chief, EOD vehicles, etc. Detachable mounting brackets will be used to facilitate vehicle rotation.

2.96.7 All requirements for non-revolving pulsating yellow lights should be filled, when possible, by removing the non-revolving pulsating light from vehicle which have both the non-revolving pulsating light and the hazard warning lights.

2.96.8 Red revolving flasher lights presently installed on metropolitan ambulances will not be replaced solely to comply with this TO, but will be replaced if required by local or host country law. The lights on these ambulances will be replaced on an as required basis.

NOTE

All other functional and safety markings for above vehicles will be accomplished as required in preceding portions of this technical order.

2.97 SHRINK-WRAPPING MOTOR COACH BUSES.

Motor coach buses supporting the Air Force/Reserve Bands and the Air Force Honor Guard may, at owning/using unit expense, be shrink-wrapped in an AFRS approved design as illustrated in Figure 2-25. Each MAJCOM's vehicle fleet manager will review all other requests to shrink-wrap motor coach buses as an exception to policy. School-type buses are not authorized for shrink-wrapping.

CHAPTER 3
MOTOR VEHICLE AND BASE SUPPORT EQUIPMENT INSPECTION

3.1 PURPOSE.

This chapter prescribes inspections and services required for Air Force motor vehicles and vehicular equipment. All inspections/service/maintenance will be documented in accordance with AFI 23-302.

3.2 RECOMMENDED CHANGES.

Submit proposed changes on AFTO Form 22 and forward through command channels to WR-ALC/TILT in accordance with TO 00-5-1. Major commands will make sure that change requests contain adequate justification and that the suggested changes are required from a command viewpoint. MAJCOMs have the authority to waive the inspection intervals contained in this TO where warranted. MAJCOMs will have authority to supplement this tech order to meet mission requirements. (Any deviations must be on file at the MAJCOMs.)

3.3 APPLICABLE PUBLICATIONS.

See AFI 23-302.

3.4 GENERAL.

3.4.1 Preventative maintenance inspections/tests and services for USAF owned vehicles, vehicular base support equipment and powered Support Equipment (SE) maintained by the vehicle management shops, are defined in this technical order and are identified by type of inspection as follows:

3.4.1.1 Operator Inspection.

3.4.1.2 Preventative Maintenance and Inspection (PM&I).

3.4.1.3 Vehicle Condition Inspection.

3.4.1.4 Special Inspection.

3.4.1.5 Technical Inspection.

3.4.1.6 Acceptance or Receipt Inspection.

3.4.2 General inspection and service requirements applicable to most vehicle/equipment are specified in the following paragraphs by type of inspection/service and special inspections/tests are contained in Table 3-1 and Table 3-2 of this technical order for easy reference. Specialized requirements peculiar to certain equipment and exceptions to general requirements and/or intervals are contained under Paragraph 3.8, Special Lubrication Instructions and Product Specifications.

3.4.3 Except for operator inspections and the Vehicle Emissions Test, inspection work cards may be prepared and used locally for guidance in performing inspections.

3.4.4 Except for operator inspections, inspections will be performed by the vehicle management activity, with assistance from using organizations when specified. All actions will be recorded on the work order. To minimize vehicle Non Mission Capable time and excessive workload, the intervals indicated in Table 3-1 and Table 3-2 are sequenced, where possible, to accommodate concurrent accomplishment of inspections, services or tests. Specified intervals for inspections, services, or tests are considered adequate for Air Force vehicles. When mandatory warranty intervals are more restrictive than Table 3-1 and Table 3-2, the manufacturer's intervals will be used. Upon expiration of the warranty, revert to intervals directed by this manual. When accomplished concurrently, each of the inspections, services, or tests listed in Table 3-1 and Table 3-2, will require a separate entry on the work order.

3.4.5 Due to their design limitations, vehicles/equipment that cannot be practically transported to the vehicle management shop for inspection or services will be serviced by the mobile maintenance team. When the required service exceeds the team capability, the responsible VFM will determine the alternate course of action.

3.4.6 Vehicles used solely for stationary training purposes are exempt from any scheduled services.

3.4.7 Vehicles in storage will be inspected and serviced in accordance with Chapter 8. The VFM may waive scheduled maintenance inspections/service reflected in Table 3-1, Table 3-2, and manufacturer's tech order for these vehicles.

3.4.8 Authority to implement more frequent scheduled maintenance intervals than those defined in this chapter is delegated to the VFM/VMS in order to prevent premature engine/component failure. The following documentation will be available.

3.4.8.1 Documented engine/component problems (premature failure, evidence of impending failure, excessive sludge accumulations, etc.).

3.4.8.2 Cost analysis, to include estimated cost of oil, filters, waste oil disposal, and additional labor hours. Analysis must address specific vehicles by registration number or management code, and be maintained in each vehicle record jacket.

3.4.9 The VFM may establish a local policy allowing utilization of manufacturer guidelines for the replacement of fuel filters (in lieu of TO 36-1-91 requirements). Ensure correct replacement intervals, in accordance with manufacturer's guidelines, are loaded in OLVIMS.

3.5 OPERATOR DAILY/WEEKLY INSPECTION REQUIREMENTS.

Operator inspections and servicing will be performed by vehicle/equipment operators using the appropriate Operators Inspection Guide and Trouble Report Form (Applicable Form 1800 Series). Refer to AFI 23-302, for guidance on use of inspection guide forms

NOTE

The AF Form 1807, Operator's Inspection Guide and Trouble Report (Fuel Servicing) is applicable to a variety of refueler vehicles and equipment. Since it is a multi-use form, some minor conflict with a dash one technical order (-1 TO) for a specific type or set of refuelers may be encountered. Interval conflicts between -1 TOs and AF Form 1807 is not cause to submit AFTO Form 22, TO System Publication Improvement Report and Reply. The form is used by the refueler vehicle operator to document refueler vehicle operability and serviceability inspections.

3.6 PREVENTATIVE MAINTENANCE AND INSPECTION.

The Preventative Maintenance and Inspection intervals are reflected in Table 3-1 and Table 3-2. In addition to these requirements, any safety related inspections, adjustments and services recommended by the manufacturer and outlined in the applicable technical orders will be performed. As a minimum, the following systems and their components are inspected to ensure proper configuration, functionality, serviceability and compliance (i.e., manuals, technical data, TCTO, safety recall, service campaigns or service bulletins) during PM&I.

3.6.1 Operator Compartment. Gauges, accessories, clutch free travel, parking and service brake operation, transmission control lever and operation of engine and accessories. Also, check seat belts for operation, cleanliness, or frayed/deteriorated condition.

3.6.2 Hydraulic Systems.

3.6.2.1 Brake system for fluid levels and leaks.

3.6.2.2 Power steering and/or hydraulic systems for fluid level and leaks.

3.6.2.3 General condition on all lines and fittings to include chaffing and abnormal wear.

3.6.3 Check Coolant System, Heater and Air Conditioning. Check hoses and radiator for leaks, proper fluid level and general condition. Take specific gravity reading. Wash and clean off radiator fins/coils as applicable. Test coolant and reserve alkalinity using testing kit NSN 6630-01-011-5039 or comparable equipment.

NOTE

Vehicles will have a minimum 50 percent antifreeze mixture at all times or arctic antifreeze. (-25° of protection)

3.6.4 Check prime and auxiliary engines for mounted components, general condition and leaks.

3.6.5 All drive belts for proper tension. Replace if excessive wear, fraying or damage is evident.

3.6.6 Fuel System.

3.6.6.1 Check for proper operation or leaks.

3.6.6.2 Ensure fuel tank sump is drained on vehicles so equipped.

3.6.6.3 Check and drain filter bowls as required. All fuel filters shall be changed per manufacturers suggested intervals or every 2 years/24,000 miles whichever is earlier.

3.6.6.4 Inspect, service/replace air filter as required.

3.6.6.5 Inspect exhaust system to include catalytic converters, tail pipes, and spark arrestors for damage and leaks. Repair or replace all unserviceable items.

NOTE

Vehicles requiring spark arrestors or purifiers are specified in TO 38-1-23.

3.6.6.6 Inspect, service/replace passenger compartment air filter as required on vehicles so equipped.

3.6.7 Inspect and service spark arrestors, purifiers, and mufflers as follows:

3.6.7.1 Check spark arresting muffler in accordance with TO 38-1-23.

3.6.7.2 Vehicle Fleet Managers shall initiate more frequent maintenance as necessary where inspections reveal excessive carbon buildup.

3.6.8 Check front-suspension and rear springs, shackles, and shock absorbers/struts for leaks, ball joints/king pins for excessive wear, upper/lower control arms for excessive wear and damage, steering for loose connections, free play and excessive wear.

3.6.9 Air Brakes. Check air and brake hoses, valves, and air tanks for leaks and tight connections. Adjust slack adjusters as required. Drain moisture from air tanks. Check air system for leaks.

3.6.10 Wheels and Tires. Check for visible damage, abnormal wear and pressure specified by Chapter 4.

Table 3-1. Vehicle and Equipment Inspection and Service Intervals

Type Equipment/Inspection/Test	Type Inspection/Interval			
	Operator Inspection (Reference Paragraph 3.5)	Daily/Weekly	Preventative Maintenance Inspection – PM&I (Reference Paragraph 3.6, Paragraph 3.7, Paragraph 3.8)	Vehicle Condition Inspection (Reference Paragraph 3.9)
1. General Purpose Vehicles	At least monthly, use Operator Inspection Guide	Visual Tire Inspection (Chapter 4) Ambulance stretcher hangars (see note 3)	18 months or 500 hours/7,500 miles/12,000 kilometers, whichever comes first.	Every time a vehicle enters the shop or 12 months, whichever comes first. Use AF Form 4355, Vehicle Incoming Inspection, to document.
2. Firefighting Vehicles	Daily when used and weekly when not used, use Operator Inspection Guide	Visual Tire Inspection (Chapter 4)	18 months or 500 hours/7,500 miles/12,000 kilometers, whichever comes first.	Every time a vehicle enters the shop or 12 months, whichever comes first. Use AF Form 4355, Vehicle Incoming Inspection, to document.
3. Fuel Servicing Vehicles - Hose Cart	Daily when used and weekly when not used, use Operator Inspection Guide See Note 2	Visual Tire Inspection (Chapter 4)	18 months or 500 hours/7,500 miles/12,000 kilometers, whichever comes first.	Every time a vehicle enters the shop or 12 months, whichever comes first. Use AF Form 4355, Vehicle Incoming Inspection, to document.
4. Special Purpose Vehicles (deicers, tow tractor, high reach, missile handling, high lift, etc.)	At least monthly, use Operator Inspection Guide	Visual Tire Inspection (Chapter 4)	18 months or 500 hours/7,500 miles/12,000 kilometers, whichever comes first.	Every time a vehicle enters the shop or 12 months, whichever comes first. Use AF Form 4355, Vehicle Incoming Inspection, to document.
5. Materials Handling (MHE) and 463L Equipment	Daily when used and weekly when not used, use Operator Inspection Guide	Visual Tire Inspection (Chapter 4)	18 months or 500 hours/7,500 miles/12,000 kilometers, whichever comes first.	Every time a vehicle enters the shop or 12 months, whichever comes first. Use AF Form 4355, Vehicle Incoming Inspection, to document.

Table 3-1. Vehicle and Equipment Inspection and Service Intervals - Continued

Type Equipment/Inspection/Test	Type Inspection/Interval			
6. Base Maintenance Vehicles/ Equipment	At least monthly, use Operator Inspection Guide	Visual Tire Inspection (Chapter 4)	18 months or 500 hours/7,500 miles/12,000 kilometers, whichever comes first.	Every time a vehicle enters the shop or 12 months, whichever comes first. Use AF Form 4355, Vehicle Incoming Inspection, to document.
7. Other powered equipment for which vehicle management has primary responsibility (see AFI 23-302)	At least monthly, use Operator Inspection Guide	Visual Tire Inspection (Chapter 4)	18 months or 500 hours/7,500 miles/12,000 kilometers, whichever comes first.	Every time a vehicle enters the shop or 12 months, whichever comes first. Use AF Form 4355, Vehicle Incoming Inspection, to document.
8. Trailers, semi-trailers and other non-powered equipment for which vehicle management has primary responsibility (see AFI 23-302)	At least monthly, use Operator Inspection Guide	Visual Tire Inspection (Chapter 4)	18 months (Reference Paragraph 3.13.2)	Every time a vehicle enters the shop or 12 months, whichever comes first. Use AF Form 4355, Vehicle Incoming Inspection, to document.
9. Natural Gas Vehicles (NGV) operating on: Compressed Natural Gas (CNG) including Bi-fuel (either gasoline and CNG), dedicated CNG or Dual-fuel (mixture of diesel/ CNG).	At least monthly, use Operator Inspection Guide	Visual Tire Inspection (Chapter 4)	18 months or 500 hours/7,500 miles/12,000 kilometers, whichever comes first.	Every time a vehicle enters the shop or 12 months, whichever comes first. Use AF Form 4355, Vehicle Incoming Inspection, to document.

NOTE 1. Vehicles in storage will be inspected and serviced according to Chapter 8. VFM may waive preventative maintenance and inspections on these vehicles as prescribed in this technical order.

NOTE 2. Operators will remove, inspect, and clean nozzle strainers every 30 days. Nozzle strainers will be replaced as required. This inspection will be entered manually on AF Form 1807. Use reverse side of forms if necessary.

NOTE 3. Medical personnel/vehicle operators will ensure ceiling stretcher hangers are operating correctly daily and prior to use.

NOTE 4. IAW TO 36M2-3-35-12, Table 1, Tunner 60K loaders will have a periodic inspection performed at 250 hours or 6 months, whichever comes first. Annual periodic inspections will be performed annually or at 1,000 hours, whichever comes first.

NOTE 5. Tire pressure will be checked, adjusted, and documented by vehicle/equipment operators on the appropriate 1800-series form NLT the 10th day if the month using Chapter 4, Paragraph 4.22.1.4 as a guide.

Table 3-2. Special Preventative Inspection/Tests

Type Inspection/Test	Intervals-Special Instructions-Reference
1. Quinquennial Testing of Cryogenics Fuel Trailers/Tube Bank Trailers.	Every 5 years (reference Paragraph 3.10.2.3). Perform hydrostatic tests (reference TO 42B5-1-2).
2. Fuel Servicing Vehicle Requirements.	
a. Water Segregators	Clean and service every 3 years or when filter elements are changed. (Reference Paragraph 3.10.2.2)
b. Replace filter/separator elements.	Change in accordance with TO 37A-1-101.
c. Perform tank inspection.	External inspections will be performed annually and Internal Inspections will be performed every 3 years IAW end item technical manual. NOTE: The preferred method of actually completing this inspection is to use a Bore Scope to eliminate personnel from entering the tank.
3. Clean, inspect (replace as required), and Repack Wheel Bearings, Check Brake Shoes, Wheel Cylinders/Calipers, Rotors, and Drums.	Every 3 years, 36,000 miles, 57,900 kilometers, or 2400 hours on all vehicles or more frequently if local law or operator conditions so warrant. Trailers/semi-trailers with packed wheel bearings will be repacked every 3 years.
4. Weight testing requirements for truck and crawler-mounted cranes.	Test loads (reference Paragraph 3.10.5.1 of this TO and AFOSHSTD 91-46 paragraph 8.2.6.2). NOTE: Notify user that weight tests are required when major maintenance is performed on lifting devices.
5. Dielectric test on cranes and high reach vehicles equipped with insulated booms, lift platforms, etc.,	Semi-annual or when insulated booms or aerial platforms are serviced or repaired (reference Paragraph 3.10.5.2.2 of this TO and TO 36C-1-4).
6. Crane/High reach boom, hook and all associated equipment.	Boom, hooks, and associated equipment will receive complete inspections at intervals IAW AFOSHSTD 91-46 (paragraph 8.2.4 and 8.2.5 for specific guidance), or as directed or recommended by manufacturer, whichever is most stringent. The VFM will determine if and when overhaul is necessary (reference Paragraph 3.10.5.1.1).
7. Hydraulic Systems (Special Purpose Assemblies).	Every 3 years or 3,600 hours (whichever occurs first) hydraulic fluid shall be changed.
8. Spark arrestors.	In conjunction with PM&I.
9. 5th wheel wedges and bolt checks.	In conjunction with PM&I.
10. Bulk fuel cargo tank vapor recovery systems.	Comply with local, state, and host country.
11. Repack wheel bearings, Oshkosh R-11 (NOTE: Use of oil instead of grease is optional)	In conjunction with PM&I.

Table 3-2. Special Preventative Inspection/Tests - Continued

Type Inspection/Test	Intervals-Special Instructions-Reference
12. Forklift Tines/Carriage Mounting	- Perform visual inspection of forklift tines at least annually. Remove forklifts from service and replace tines when cracked, bent, or significantly damaged. - Inspect carriage lock plate mounting bolts for tightness
13. Emission Systems	In conjunction with PM&I, unless required more frequently by host nation or local laws (reference Paragraph 3.10.8).
14. On-Board Cabin Filter Inspection	In conjunction with PM&I.
15. Automatic Transmission Filter Inspection	Every 3 years.

Table 3-3. Preventative Maintenance Interval Conversion Table-Miles to Kilometers

Miles	Kilometers	Miles	Kilometers	Miles	Kilometers
500	800	28000	45000	65000	104500
1000	1600	29000	46600	66000	106100
1500	2400	30000	48200	67000	107800
2000	3200	31000	49800	68000	109400
2500	4000	32000	51400	69000	111000
3000	4800	33000	53000	70000	112600
3500	5600	34000	54700	71000	114200
4000	6400	35000	56300	72000	115800
4500	7200	36000	57900	73000	117400
5000	8000	37000	59500	74000	119000
5500	8800	38000	61100	75000	120600
6000	9600	39000	62700	76000	122200
6500	10400	40000	64300	77000	123800
7000	11200	41000	65900	78000	125500
7500	12000	42000	67500	79000	127100
8000	12800	43000	69100	80000	128700
8500	13600	44000	70700	81000	130300
9000	14400	45000	72400	82000	131900
9500	15200	46000	74000	83000	133500
10000	16000	47000	75600	84000	135100
11000	17600	48000	77200	85000	136700
12000	19300	49000	78800	86000	138300
13000	20900	50000	80400	87000	139900
14000	22500	51000	82000	88000	141500
15000	24100	52000	83600	89000	143200
16000	25700	53000	85200	90000	144800
17000	27300	54000	86800	91000	146400
18000	28900	55000	88400	92000	148000
19000	30500	56000	90100	93000	149600
20000	32100	57000	91700	94000	151200
21000	33700	58000	93300	95000	152800
22000	35300	59000	94900	96000	154400
23000	37000	60000	96500	97000	156000
24000	38600	61000	98100	98000	157600
25000	40200	62000	99700	99000	159200
26000	41800	63000	101300	100000	160900
27000	43400	64000	102900		

3.6.11 Vehicle Lighting. Check all lights, (i.e., headlights, turn signals, warning lights, mounted signals, spot/flood lights) for general condition and operation.

3.6.12 Check pintle hooks and towing attachments. Make sure of proper mounting and proper locking, safety pin installation and caution decal is affixed in accordance with TO 36-1-121.

3.6.13 Check battery for proper solution level. Clean and service terminals and battery box as necessary.

3.6.14 Corrosion. Inspect all areas of vehicle for corrosion and treat as required in accordance with Chapter 6.

3.6.15 Hydraulic System (Special Purpose Assemblies).

3.6.15.1 Check cylinders, lines, seals, and reservoirs for general condition and possible contamination (particles and water). Change fluid every 3600 operating hours or three years, whichever comes first.

3.6.15.2 Change filters in accordance with applicable TO.

NOTE

Sonic filters can be removed, cleaned, and reinstalled in lieu of replacement.

3.6.16 Drive Line. Carefully inspect drive line to keep the vehicle operating smoothly. Check boots for leaks, cracks, weathering, and security of placement. Replace as required.

3.6.17 Warning Devices And Decals. Inspect all vehicle warning devices (lights and buzzers) for proper operation. Ensure all warning and caution decals are in good repair and easily read.

3.6.18 Engines. Perform an engine diagnostic test using available test equipment. Repair/replace only those parts/assemblies necessary to ensure engine performance in accordance with manufacturer's specifications.

3.7 FUEL SERVICING EQUIPMENT INSPECTION.

The following inspections, tests, and services will be performed in accordance with TO 37A-1-101: Gauge and meter calibration, line and basket strainer inspection, hoses used for hot ICT refueling, and fuel dispensing pressure regulators. Dry break couplers will be inspected in accordance with TO 37A4-3-3. These services are in addition to scheduled items listed in Paragraph 3.10.

NOTE

Hydrostatic hose testing is normally only required when new fuel hoses are installed or immediately after abnormal use (i.e., crushing or kinking) and after coupler(s) have been replaced/installed or when there is a suspected deterioration of the hose. See exceptions in frequencies of inspections noted in TO 37A-1-101; Table 5-1. Hydrostatic test new hose(s) only if certification of hydrostatic testing of the hose cannot be obtained from the vendor. Hose(s) on new R-11s/R-12s have been hydrostatically tested prior to delivery to the user.

3.8 SPECIAL LUBRICATION INSTRUCTIONS AND PRODUCT SPECIFICATIONS.

3.8.1 Special Instructions. Table 3-1 of this technical order establishes the intervals for preventative maintenance and inspection as part of the scheduled inspection. When the technical orders, commercial manuals or manufacturer's specifications establish a mandatory interval significantly different from Table 3-1, based on design features, and deviations would cause damage and/or void the manufacturer's warranty, the manufacturer's recommended intervals will be used.

NOTE

Units that implement a MAJCOM oil analysis program may extend oil life in vehicles according to the program guidelines.

3.8.1.1 When warranty expires, Table 3-1 will be followed.

3.8.1.2 The VFM may recommend, for major command approval, adjusted lubrication, oil and filter change intervals when justified based on local operating and environmental conditions. Changes in assignment of vehicles with adjusted intervals will require change to appropriate static data. Major commands are authorized to approve justified changes to service intervals based on the considerations listed below; however, blanket-type interval and adjustments to satisfy ease of scheduling will not be permitted. The following should be considered when adjusting PM&I intervals.

3.8.1.3 Operational environment, e.g., dust, high humidity, cold weather, corrosion.

3.8.1.4 Operational utilization, e.g., flight line, multi-shift, poor terrain.

3.8.1.5 Operational speed, e.g., high way usage, normal base, extensive idling.

3.8.1.6 Intervals that enhance the safety and continued operation of the equipment, e.g., direct support mission essential vehicles.

NOTE

- Care should be exercised in reducing intervals for lubrication to prevent unnecessary workloads from being imposed on the vehicle management activity and unnecessary waste of resources.
- Some newer vehicles specify the use of synthetic oils. Authority is granted to comply with OEM specifications throughout the warranty period. Upon the next service where the fluids need changing after the warranty has expired, lubrication products will meet the specifications listed herein.

3.8.2 Fuel, lubrication, oil and battery additives will not be used in Air Force vehicles or equipment, except those listed in TO 36-1-7.

3.8.3 Requirements for products not identified to a military specification will be justification for local purchase.

3.8.4 Certain late model vehicles are factory equipped with components that normally will not require lubrication for a period up to 30,000 miles/48,200 kilometers of operation. Specialized lubricants may be used in lieu of specification MIL-PRF-10924G (Grease) for servicing these components.

3.8.5 Some Ford automatic transmissions use type F automatic transmission fluid (NSN 9150-00-843-1636) conforming to Ford Specification M2C33. Internal damage could occur if the wrong fluid is used. Fluids of different types should not be mixed.

NOTE

Manufacturers fluid recommendations should be checked prior to adding or changing automatic transmission lubricant.

3.8.6 Commercial products may be locally purchased for cleaning and servicing battery terminals, boxes and cable ends.

3.8.7 Technical Data and Product Specification.

3.8.7.1 Adequate technical data reference material on lubrication, oils and accessories suitable for the various types of vehicles/equipment must be available and accessible to maintenance personnel as a guide for servicing components. Lubrication data can be obtained from the following sources:

3.8.7.1.1 For commercial design vehicles. Order lubrication instructions from GSA Federal Supply Schedule, NSN 7610-00-660-0271, and 7610-00-660-0272 or refer to Mitchell ON- Demand.

3.8.7.1.2 Other commercial design equipment, military design general and special purpose equipment. Obtain applicable technical orders (TO) through publication distribution channels. Commercial manuals can be obtained by local purchase or from the manufacturer if not provided with the vehicle/equipment.

3.8.7.1.3 Extract lubrication charts applicable to assigned equipment from above publications.

3.8.7.2 The vehicle management activity shall assemble and maintain within the lubrication work center, a reference library for each model of equipment in sequence, according to the third digit of the registration number as follows:

3.8.7.2.1 “B” Commercial, general purpose.

3.8.7.2.2 “C” Commercial, special purpose.

3.8.7.2.3 “D” Commercial Construction/Base Maintenance.

3.8.7.2.4 “E” Materials handling equipment.

3.8.7.2.5 “K” Military, general purpose.

3.8.7.2.6 “L” Military, special purpose.

3.8.7.2.7 “M” Military Construction/Base Maintenance.

3.8.7.2.8 “W” Vehicular type AGE.

3.8.7.2.9 “X” Nonreportable.

3.8.7.2.10 All other.

3.8.7.3 Product Specifications. The following lubricant/oil products are listed by common name and referenced to the existing military specification. These products will normally be used by the vehicle activities except as modified under Special Instructions Paragraph 3.8 and as may be specified by manufacturers for subsequently procured new equipment.

Table 3-4. Lubricant/Oil Product Specifications

Product Name	Specification	NSN	Quantity
Engine Oil	MIL-PRF-2104H	9150-01-152-4117	Qt
15W40	MIL-PRF-2104H	9150-01-152-4118	5 Gal
15W40	MIL-PRF-2104H	9150-01-152-4119	55 Gal
Re-Refined Oil 10W30	SAE-J2362	9150-01-413-6897	Bx
Re-Refined Oil 10W30	SAE-J2362	9150-01-413-6892	5 Gal
Re-Refined Oil 10W30	SAE-J2362	9150-01-413-6990	55 Gal
Re-Refined Oil 15W40	MIL-PRF-2104H	9150-01-421-1427	Qt
Re-Refined Oil 15W40	MIL-PRF-2104H	9150-01-421-1424	5 Gal

Table 3-4. Lubricant/Oil Product Specifications - Continued

Product Name	Specification	NSN	Quantity
Re-Refined Oil 15W40	MIL-PRF-2104H	9150-01-421-1432	55 Gal
Chassis Lubricant	PRF-10924G	9150-01-197-7688	TU
	MIL-PRF-10924G	9150-01-197-7689	CN
Petroleum base, fire resistant Hydraulic Oil	MIL-PRF-83282D(1)	9150-00-149-7431	QT
	MIL-PRF-83282D(1)	9150-00-149-7432	GL
Nonpetroleum Base Hydraulic Brake Fluid	SAE-J1703	9150-01-052-6762	QT
	SAE-J1703	9150-00-231-9071	GL
Automatic Transmission Fluid	Dextron III	9150-00-698-2382	QT
Automatic Transmission Fluid (Ford)	Type F	9150-00-843-1636	GL
Oil Lube General Purpose Silicone Spray	MIL-PRF-173315	9150-00-823-7860	CN
Penetrating Oil	A-A-50493B	9150-00-261-7899	CN
Grease, Wheel Bearing	MIL-G-25013E	9150-01-306-9202	CN
Antifreeze/Water Pump Lube (to -55 0 °F)	CID A-A-52624A	6850-01-441-3223	55 GL
Fuel, Motor Gasoline (MOGAS)	ASTM-D4814	9130-00-148-7104	
Winter Grade Diesel	CID A-A-52557A		
Summer Grade Diesel	CID A-A-52557A		
Brake Fluid, Silicone	MIL-PRF-46176B	9150-01-102-9455	GL
	MIL-PRF-46176B	9150-01-123-3152	5 GL
	MIL-PRF-46176B	9150-01-072-8379	55 GL

Ice Classifications	Former Classifications	Military Equivalent Specification
Gasoline Engines		
Service SA* Utility Gas Diesel	ML	None
Service SB* Minimum Duty	MM	None
Service SC*	MS (’64-’67)	MIL-PRF-2104H
Service SD*	MS (’68-’71)	None
Service SE* Leaded	MS (’71-’80)	SAE-J2362
Service SF* Unleaded	(’80 present)	MIL-PRF-2104H
Diesel Engines		
Service CA*	DG	MIL-PRF-2104H
Service CB*	DM	MIL-PRF-2104H
Service CC*	DM	MIL-PRF-2104H
Service CD*	DS	MIL-PRF-2104H
Combinations		
Service CC/SE*	NONE	SAE-J2362
Service CD/SE*	NONE	MIL-PRF-2104H

* Oils meeting SE classification will be used in 1971 and newer commercial G.P. vehicles. SA through SD oils may be used in older models according to age and usage. SF to be used in all other vehicles unless environment/operational conditions dictate special lube requirements.

NOTE

- 15W40 oil meets crankcase requirements for most gasoline and diesel engines.
- Hot environment, where the winter 10th percentile minimum temperatures do not go below 0° Fahrenheit (-18° Centigrade), grade 15W40 can be used year round. Extra preheat warm-up is necessary when temperatures occasionally drops below 0° Fahrenheit. Grade 15W40 can be used in all hot weather environments except Detroit Diesel Series 53/71/92 engines which are limited to 100° Fahrenheit while under warranty. Product Name Specification Engine Oil MIL-PRF-46167D
- Re-refined MIL-SPEC motor oil. Executive Order 12873 and the Resource Conservation and Recovery Act require federal agencies to purchase products containing recycled materials. Units required to use virgin oil must submit a waiver request with justification to their MAJCOM for approval.
- Cold environments, where summer average daily highs seldom exceed 60 degrees Fahrenheit and the number of days with a maximum temperature between 90° and 100° Fahrenheit are very limited MIL-PRF-2104H can be used year round. If continuous daily high temperatures exceed 90° Fahrenheit, oil should be changed to 15W40 MIL-PRF-2104H. Product Name Specification Engine Oil SAE-J2362.
- All other environments, where temperatures are (−15° to +100° Fahrenheit) use grade 10W30, where temperatures are (0° to +125° Fahrenheit) use grade 15W40. Product Name Specification NSN Universal Gear Lubricant SAE-J2360-80W90, 9150-01-035-5392, 10° to 120° Fahrenheit, 75W 9150-01-035-5390, 50° to 55° Fahrenheit, 85W140 9150-01-048-4591, 10° to 120° Fahrenheit.
- Re-refined MIL-SPEC motor oil. Executive Order 12873 and the Resource Conservation and Recovery Act require federal agencies to purchase products containing recycled materials. Units required to use virgin oil must submit a waiver request with justification to their MAJCOM for approval.

3.9 VEHICLE CONDITION INSPECTION.

The Vehicle Condition Inspection will be performed by vehicle management technicians using the AF Form 4355, Vehicle Safety and Incoming Inspection, to verify a vehicle's condition when accepting a vehicle into maintenance. Vehicle Condition Inspection intervals are specified in Table 3-1. Refer to AFI 23-302 for guidance on use of the AF Form 4355.

3.10 SPECIAL INSPECTION.

For reasons of safety and to ensure operational reliability, numerous special inspections and operational test requirements are imposed by the technical directives referenced in Paragraph 3.8. Many of these requirements are listed in Table 3-1 and Table 3-2. Every effort should be made to perform the inspections/tests concurrently with the PM&I. When not accomplished as a part of the regularly scheduled PM&I, these inspections/tests will be separately tracked and accomplished at intervals specified by the prescribing directive or technical order. Applicable directives must be consulted for detailed procedures when accomplishing these inspections. Each special inspection/test will be recorded on the Vehicle Historical Record.

3.10.1 Clean, inspect (replace as required), and repack wheel bearings every 3 years, 36,000 miles, 57,900 kilometers, or 2400 hours, or more frequently if local laws or operating conditions require. When brakes are replaced, brake shoes, wheel cylinders/calipers, rotors, drums, etc. should be checked at this interval. Trailers and semi-trailer wheel bearings will be repacked every three years.

NOTE

Wheel bearings lubricated by oil shall be cleaned and inspected (replace as required) whenever the brake shoes are replaced, anytime wheel bearing serviceability is in question, or annually if regularly submerged in water (i.e., boat trailers).

3.10.2 Refuelers. The following refueling test/services will be accomplished at intervals outlined in Table 3-2:

3.10.2.1 Filter/Separator Element Change. Change filter/separator elements in accordance with TO 37A-1-101. If replacement filter packages or elements show evidence of damage, elements will not be used.

3.10.2.2 Inspection/Testing and Servicing Water Segregators. Clean and service every three years or when filter elements are changed. Water drain valves and water block valves will be serviced as outlined in applicable equipment technical manuals at intervals prescribed above.

NOTE

Vehicle Management will inform the fuels control center any time the pumping system is open. Name of person notified, date and time will be annotated on the AF Form 1807.

3.10.2.3 Quinquennial Testing Cryogenic Fuel Trailer/ Tube Bank Trailers.

3.10.2.3.1 This test will be performed at 5-year intervals.

3.10.2.3.2 Normally facilities do not exist at Air Force bases for quinquennial testing of cryogenics fuel trailers. Base vehicle management, coordinating with base fuels, will program their requirements in accordance with Chapter 9. Intermediate and Depot Repair of USAF vehicles and vehicle components. Advanced planning is required to insure tests are completed as scheduled.

3.10.2.4 Tank Inspections. Tank inspections will be conducted IAW Table 3-2 of this technical order, Title 49, Code of Federal Regulations, Part 18.401 through Part 180.147, and/or end item technical manuals.

3.10.2.4.1 Vehicles not in commerce only require internal/ external inspections IAW Table 3-2 of this technical order. Inspections will be loaded/tracked in OLVIMS as concurrent or special inspections. Refer to the applicable end item manual for specific inspection criteria (i.e., Oshkosh R-11 IAW TO 36A12-13-17-82).

NOTE

Definition of “In Commerce” as it pertains to the guidance in this TO: The transport and sale/transfer of POL products to or from a non-DoD agency. On or off base operations, or any combination thereof, has no impact on determining “In Commerce” status.

3.10.2.4.2 Pressure/Leakage tests and tank certification are required if vehicles are used in commerce. Pressure/leakage tests will be conducted and tank marking will be applied IAW 49 CFR Part 180.401-417 prior to use. Personnel performing pressure/leakage test must meet requirements outlined in 49 CFR Part 180.409.

3.10.2.4.2.1 Military or contracted operations using Air Force assets in commerce require tank certification in accordance with 49 CFR Part 180.401-417.

3.10.2.4.2.2 Contracted operations using contracted commercial assets in commerce require tank certification IAW 49 CFR Part 180.401-417. If a contractor operates Air Force assets utilizing Air Force fuel they are not in commerce.

3.10.2.4.2.3 Units required to operate refueling vehicles on public highways (not in commerce) on a recurring basis may elect to have assets certified IAW 49 CFR Part 180.401-417. This is provided as possible option to enhance public safety.

3.10.2.4.2.4 R-9s are not permitted for use on public highways due to not meeting current tank standards and therefore, are unable to be certified. M49s are considered tactical vehicles and are exempt from certification requirements outlined in 49 CFR Part 180.401-417.

3.10.3 Hydraulic Systems (Special Purpose Assemblies). Change hydraulic filters and hydraulic fluid every three years or 3600 hours. Record filter fluid analysis action on vehicle historical records.

3.10.4 Truck tractor fifth wheel plate and semitrailer king pin will be thoroughly cleaned of all grease and foreign material and components carefully-inspected to determine condition. Worn or damaged components visually determined to be in doubtful condition will be cause for disassembly and repair or replacement. Standard fifth wheel locking jaws will be adjusted to fit a 2.005-inch round rod stud. Locking jaws in the locked position that are worn 1/8 inch beyond all available adjustment will be replaced. Semi-trailer king pin worn 1/8 inch maximum when measured in front to rear direction will be replaced. Maximum combination wear of locking jaws in the locked position and king pin will not exceed 1/4 inch. Upon completion of inspection/repair, lubricate fifth wheel plate and trailer king pin.

3.10.5 Cranes, Crane Shovels, High Reach Trucks, Line Maintenance Derrick Trucks, Wrecker Booms.

3.10.5.1 Mobile Crane Load Tests. When new cranes are received, Vehicle Management will file the manufacturer’s load test certificate in the vehicle historical record. If a new crane is received without the load test certificate, contact the manufacturer to obtain the certificate. If this is not possible, the using organization must accomplish load testing IAW AFOSH Std 91-46. Additionally, Vehicle Management will ensure using organizations accomplish load testing, to 110 percent of capacity, for any extensively repaired/ modified cranes. This requirement also applies to high-reach trucks, auger derricks, wrecker booms, or any other boom-

equipped vehicle with a personnel basket. For nuclear-certified hydraulic mobile cranes an annual load test of 100 percent of the rated capacity is required IAW AFOSH Std 91-46.

NOTE

Upon completion of all testing, the weight load test date will be stenciled in 1-inch letters on the lower boom assembly. Records of all tests will be filed with the maintaining and using organizations.

3.10.5.1.1 Mobile Crane Hook Inspections. Annually, Vehicle Management will inspect lift hooks on cranes and wrecker booms for cracks, chemical damage, hook attachment and security, lubrication of swivel joint, excessive clearance in the hook opening in excess of 15 percent of the original gap, and evidence of twisting in excess of 10 degrees from normal configuration. If any of these conditions exist, the hook must be replaced. Inspect crane hook and lifting hardware in accordance with the vehicles TO. In the absence of guidance from the vehicle TO, refer to AFOSH STD 91-46, Paragraph 9.4.1. For nuclear certified cranes: In addition to above listed requirements, lift hooks will receive annual non-destructive inspection (NDI) testing and accomplishment of testing will be documented by Vehicle Management. Refer to AFOSH STD 91-46, Paragraph 9.4.1.

3.10.5.2 High Reach Trucks.

CAUTION

A fully qualified operator from the using organization must operate crane during this test.

Hoist and leveling cables will be completely inspected on all high reach trucks at least every three years or more often as determined by the VFM/VMS. The VFM/VMS will determine whether complete overhaul is necessary to make sure the equipment is in a safe and trouble free condition. If overhaul is necessary, the cost of these repairs must be funded locally and forecast in budget estimates.

3.10.5.2.1 Dielectric (Voltage Breakdown) Test. The dielectric (voltage breakdown) tests are to be performed on cranes and high reach vehicles equipped with insulated booms; lift platforms, etc., concurrently with a visual inspection of all weldments and a boom weight test. Specific testing and inspection procedures are contained in the applicable technical orders and TO 36C-1-4, Dielectric Testing of Insulated Manlift Devices. The following general guidelines are provided:

3.10.5.2.2 Dielectric test is the responsibility of the local Base Civil Engineer or other owning organization, with assistance from Vehicle Management as required. Where personnel and/or test equipment are not available, test will be conducted by local contract. Normally, local power or telephone companies can provide this service.

3.10.5.2.3 Visual inspection of welded-areas is the responsibility of vehicle management. All welded areas on the boom and boom attachments will be thoroughly cleaned. Any cracks or damage visible to the naked eye will be cause for repair/replacement action.

NOTE

Low/medium profile trucks used “only” to set poles, install antennas and other telecommunications equipment on poles that have no “live” voltage must have the following warning stenciled on the operator’s console and basket:

WARNING

This equipment will not be used on joint use poles or within 10 feet of electrical power lines without being dielectrically tested and certified according to TO 36C-1-4 by qualified personnel.

3.10.6 Certification Test: Firefighting Aerial Ladders and Elevating Platforms shall be tested at least annually, after major repairs or overhaul, following the use of the aerial ladder (when it may have been subjected to unusual operating conditions of stress or load), or when there is reason to believe that usage has exceeded the manufacturer’s recommended operating procedure. This test is the responsibility of Base Fire Department with assistance from Vehicle Management. Refer to National Fire Protection Association (NFPA) Standard 1904 for detailed inspection and documentation procedures.

3.10.7 Natural Gas Cylinder/Tank Inspection. Each base maintaining Natural Gas Vehicles will accomplish preventive maintenance and inspections in accordance with Compressed Gas Association Pamphlet C-6-4, Methods for External Visual Inspection of Natural Gas Vehicle Fuel Containers and Their Installations. The pamphlet can be purchased from the Compressed Gas Association’s website at: www.cganet.com.

3.10.8 Emission Systems. The following emission systems test/services will be accomplished at intervals outlined in Table 3-2:

3.10.8.1 Compare vehicle performance against manufacturer’s specifications, i.e., cylinder balance, c/o and hydrocarbons. Accomplish performance testing by using an infrared emission tester or opacity meter.

3.10.8.2 Ensure proper choke operation.

3.10.8.3 Inspect/clean or replace emission control devices, hoses, PCV valves, etc.

3.10.8.4 Where applicable, the infrared emission tester/opacity meter will be used to certify emission tests on gasoline/diesel engines for vehicles assigned/maintained on DoD installations. Printouts/readings will be attached or annotated on closed work order and retained in records jacket as proof of testing being accomplished. If host country, state, or local laws require more stringent standards these will take precedence over recommended manufacturer's specifications.

3.10.8.5 Maintain a copy of engine analyzer/emissions tester technical data printout in the records if required by host country, state, or local requirements.

3.11 TECHNICAL INSPECTION AFTO FORM 91, LIMITED TECHNICAL INSPECTION (LTI)-MOTOR VEHICLE.

The AFTO Form 91 will be used for technical inspection on all USAF vehicles as prescribed herein, except those having a standard price or local purchase price of less than $10,000. AFTO Form 91 will be processed to the appropriate agency under the following condition:

3.11.1 Disposition Instructions: When it has been determined by the Logistics Readiness Squadron commander or equivalent, (may be delegated to the Vehicle Fleet Manager, as appropriate) that it is not cost effective to repair a vehicle in accordance with Chapter 5, an AFTO Form 91, Limited Technical Inspection (LTI), will be prepared in accordance with command policy. If vehicle management is a contracted service, the LRS QAP or LRS Commander will make the determination on vehicle cost effectiveness. Requests for disposition of uneconomical repairable/excess vehicles will be submitted in accordance with AFMAN 23-110.

3.11.2 Transfer (Vehicle Being Transferred to Another Installation).

3.11.2.1 Prior to shipping vehicles between Air Force activities, a technical inspection will be performed to determine that vehicles are serviceable from an operational standpoint, as specified in Chapter 1. Transferred vehicles must be in a condition that will permit utilization by the receiving activity without additional repairs. Prepare the LTI form in duplicate. A copy will be included in the vehicle records for use by the receiving organization.

3.11.2.2 The technical inspection of vehicles designated for the Military Assistance Program will indicate specifically the condition of the equipment in relation to its original life expectancy and appearance. The eligibility of these vehicles is not affected by the repair allowance. A copy will be included in the vehicle records for use by the receiving organization.

3.11.2.3 Acceptance. For used vehicles, use the LTI prepared by the transferring organization. AFTO Form 91 will be accomplished on the new vehicles if necessary.

3.11.2.4 Depot Repair Request/Input. Refer to Chapter 1.

3.12 ACCEPTANCE INSPECTION.

See Chapter 1.

3.13 SEMI-TRAILER INSPECTIONS.

3.13.1 Corrective Action Inspection: The following inspection should be performed on semi-trailers when they are reported to vehicle management with annotated discrepancies other than minor maintenance (unless accomplished within last 90 days).

3.13.1.1 Structural inspection per Table 3-5 through Table 3-6. Any cracks annotated in Column A of the Semi-Trailer Structural Inspection Checklist shall be corrected prior to releasing the vehicle from the vehicle management activity. Repairs of deficiencies annotated in Column B of the checklist may be delayed up to 15 days at the VFM's discretion, however every effort should be made to repair these discrepancies while the vehicle is in the vehicle management complex. Repair of cracks identified in Column C of the checklist may be delayed until the next PM&I.

3.13.1.2 Check wiring system for broken or frayed sections.

3.13.1.3 Check the suspension for broken or worn parts.

3.13.1.4 Visually inspect brake operating parts for excessive wear or damage. Check slack adjusters for proper adjustment and operation.

3.13.2 PM&I.

3.13.2.1 Perform structural inspection per this table and correct all weld cracks or other structural abnormalities.

3.13.2.2 Clean, inspect (replace as required), and repack wheel bearings every 3 years.

3.13.2.3 Tighten all U or spring bolts as necessary.

3.13.2.4 Inspect all brake parts (i.e., linings, drums, etc.) for wear and damage. Check slack adjusters for proper adjustment and operation. Repair/adjust as required.

3.13.2.5 Check axle spindles for alignment.

3.13.2.6 Check air system for leaks or deteriorated parts.

3.13.2.7 Check wiring harness for broken parts, frayed wires, damaged connectors, conduit, etc.

3.13.2.8 Lubricate trailer per vehicle TO. Wheel bearings lubricated by oil shall be cleaned and inspected IAW manufacturer's specifications. Replace as required whenever the brake shoes are replaced, any time wheel bearing serviceability is a question, or annually if regularly submerged in water (i.e., boat trailers).

Table 3-5. Definition of Terms

Terminology	Meaning
Main Beam	A main structural member of a lowbed, platform or chassis trailer, usually one of a pair.
Undercarriage (running gear, bogie)	A structural sub-frame complete with suspension and axle-wheel assemblies.
Upper coupler plate (upper fifth wheel plate)	The flat plate on the underside of the upper coupler, through which the king pin protrudes and which rests directly on the tractor fifth wheel.
Rear Cross Member	A transverse member at the extreme rear of a trailer to which the bumper is normally mounted and on which stop, tail, and turn lights are often installed.
Cross Member	A transverse member in a trailer chassis or under-frame.
Upper Coupler Assembly	The structural element at the front of a trailer, which includes the kingpin, which receives and transfers the load from the forward portion of the trailer's load carrying elements to the tractor's fifth wheel.
Bulkhead	A structure (fixed or removable) installed across the width of a trailer to compartmentalize a trailer and/or to protect against damage caused by shifting cargo.
Parent Material (base material)	Structural shapes or plates which are welded to create the chassis.
Chassis	The structural framework comprising the load carrying elements on all trailers.
Gooseneck	On a drop frame trailer, that portion of the trailer which extends upward and forward from the front of the loading deck to, and including, the upper coupler and front cross member.
Gooseneck, Full Width	A gooseneck, the same width as the trailer neck.
King Pin	A specially machined stub shaft which extends vertically from the lower surface of the upper coupler assembly which locks into a fifth wheel.
Outrigger (side bracket)	Structural load-carrying members attached to and extending outward from the side beams.

Semi-Trailer Inspection Form and Checklist/Procedures:

This inspection form, or reasonable facsimile, will be used by the vehicle management technicians during PM&I or as directed by the VFM. It may also be useful for vehicle management technicians to access weld cracks or defects found by operators using the Operators Inspection Form and Trouble Report for trailers. Due to the generic nature of this inspection form, some joints may be inspected from several different directions. The checklist may be used to inspect gooseneck as well as flatbed trailers. On a flatbed trailer perform the "gooseneck" inspections on the front part of the trailer.

INSPECTION RESULTS

COLUMN	ACTION TO BE TAKEN
A	Remove trailer from service. Repair cracks or defects before returning unit to service. Weld repairs must be made by a certified welder.
B	Schedule trailer for corrective action within fifteen (15) days if defect is found by operator during daily or upon use inspection. Unit may remain in service. Defects found during PM&I should be corrected before returning unit to service. Weld repairs must be made by a certified or a qualified welder.
C	Corrective action may be performed at the next scheduled maintenance period, unless the trailer is in the stop. Weld repairs may be made by certified or qualified welder.

DEFINITIONS:

Certified Welder: A person who has completed a welder's training course and possesses one or more of the following:

a. Certification from American Welding Society

b. Certification for Aircraft Welders IAW TO 00-25-252

c. Certification from a third party that weld samples have been destructively inspected and found acceptable

Qualified Welder: A task qualified welder.

PN-TO36-1-191-048

Figure 3-1. Semi-Trailer Inspection Form and Checklist Procedures

Table 3-6. Semi-Trailer Structural Inspection Checklist

If A Crack Is Found, Enter A "Y" In The Corresponding Block Otherwise Enter A "N"			
	A	B	C
GOOSENECK, FRONT	DISCREPANCY EXISTS Y/N		
Inspect welds of the forward bulkhead to the surrounding structure		X	X
Inspect all front gooseneck components for cracks in the parent material		X	X
	A	B	C
GOOSENECK, BOTTOM	DISCREPANCY EXISTS Y/N		
Inspect welds of the fifth-wheel king pin supporting structure		X	X
Inspect welds of the upper coupler plate to the main beams and fifth-wheel supporting structure		X	X
Inspect welds of the toolbox bottom to both main beam flanges as applicable	X	X	
Inspect welds on the gooseneck splice plates on the main beam lower flanges forward of landing gear		X	X
Inspect welds of all main beam web stiffeners on inner and outer sides of main beam webs		X	X
Inspect welds of the gooseneck extension at all cross member and bulkhead connections where they connect to the side rails (full width goosenecks only)	X		X
Inspect welds of the gooseneck extension at all cross member and bulkhead connections where they connect to the main beams (full width goosenecks only)		X	X
Inspect all bottom gooseneck components for cracks in the parent material		X	X
	A	B	C
GOOSENECK, LEFT AND RIGHT SIDE	DISCREPANCY EXISTS Y/N		
Inspect welds of all main beam stiffeners attached to the main beam webs and main beam flanges.		X	X
Inspect welds of both main beams to the forward and rear bulkheads		X	X
Inspect welds of all landing gear support brackets at the main beam/main deck attachment points		X	X
Inspect welds of all landing gear support brackets at the landing pear	X		X
Inspect all left and right side gooseneck components for cracks in the parent material		X	X
	A	B	C
MAIN DECK, UNDERSTRUCTRE	DISCREPANCY EXISTS Y/N		
Inspect welds of both main beams at rear bumper		X	X
Inspect welds of main beam flanges at the main beam webs		X	X
Inspect welds of main deck cross members at the main beam webs		X	X
Inspect welds of main deck cross members at the side rails	X		X
Inspect welds of side rails at the forward bulkhead/cross member	X		X
Inspect welds of metal decking at supporting structure as applicable	X		X
Inspect surfaces of main beam flanges/webs for cracks in the parent material		X	X
Inspect welds of main beams at the forward bulkhead/cross member		X	X
Inspect welds of center cross members at the main beam webs/flanges as applicable		X	X
Inspect welds of main beam web stiffeners at all locations as applicable		X	X
Inspect welds of undercarriage attachment points at the main beam flanges		X	X
Inspect welds of support brackets attached to the main beam web/flanges at the undercarriage (i.e. air tank, etc.)		X	X

Table 3-6. Semi-Trailer Structural Inspection Checklist - Continued

If A Crack Is Found, Enter A "Y" In The Corresponding Block Otherwise Enter A "N"			
Inspect all main deck understructure components for cracks in the parent material		X	X
	A	B	C
MAIN DECK, LEFT AND RIGHT SIDE	DISCREPANCY EXISTS Y/N		
Inspect welds of "D" rings (tie-downs) and associated gussets at the side rails		X	X
Inspect welds of side rails at the rear cross member and forward bulkhead/gussets as applicable	X		X
Inspect welds of the outrigger arm attachments at the side rails	X		X
Inspect all main deck left and right side components for cracks in the parent material		X	X
	A	B	C
REAR CROSS MEMBER	DISCREPANCY EXISTS Y/N		
Inspect welds of rear cross member to under ride protection	X	X	
Inspect welds of "D" ring (tie-downs) and associated gussets at the rear bumper		X	X
Inspect welds of rear cross member at side rails	X		X
Inspect cross member for cracks in the parent material	X		X
Inspect welds of both main beams at the rear cross member		X	X
	A	B	C
MAIN DECK, TOP	DISCREPANCY EXISTS Y/N		
Inspect welds of both gussets in the transition from the gooseneck to the main deck forward bulkhead/cross member		X	X
Inspect welds of side rails at the forward bulkhead/cross member		X	X
Inspect welds of metal decking to the surrounding structure as applicable	X		X
Inspect top surface of main beam flanges for cracks in the parent material		X	X
Inspect welds of both main beams at the forward bulkhead/cross member		X	X
	A	B	C
GOOSENECK, TOP	DISCREPANCY EXISTS Y/N		
Note: Remove fixed covers as applicable. Be sure to inspect welds inside of tool boxes.	X	X	X
Inspect welds of main beam flanges at the main beam webs		X	X
Inspect welds of toolbox covers and hinges	X	X	
Inspect welds of toolbox cross members at the main beam flanges and webs	X		X
Inspect welds of the fifth-wheel king pin and king pin supporting structure, bulkheads, cross members, etc.		X	X
Inspect welds of the toolbox bottom at both main beam flanges	X	X	
Inspect welds of the front bulkhead (located at the rear of the gooseneck)		X	X
Inspect welds of the gooseneck extension at all cross member and bulkhead connections where they connect to the main beams (full width goosenecks only)		X	X
Inspect welds of the gooseneck extension at all cross member and bulkhead connections where they connect to the side rails (full width goosenecks only)	X		X
Inspect all top gooseneck components for cracks in the parent material		X	X

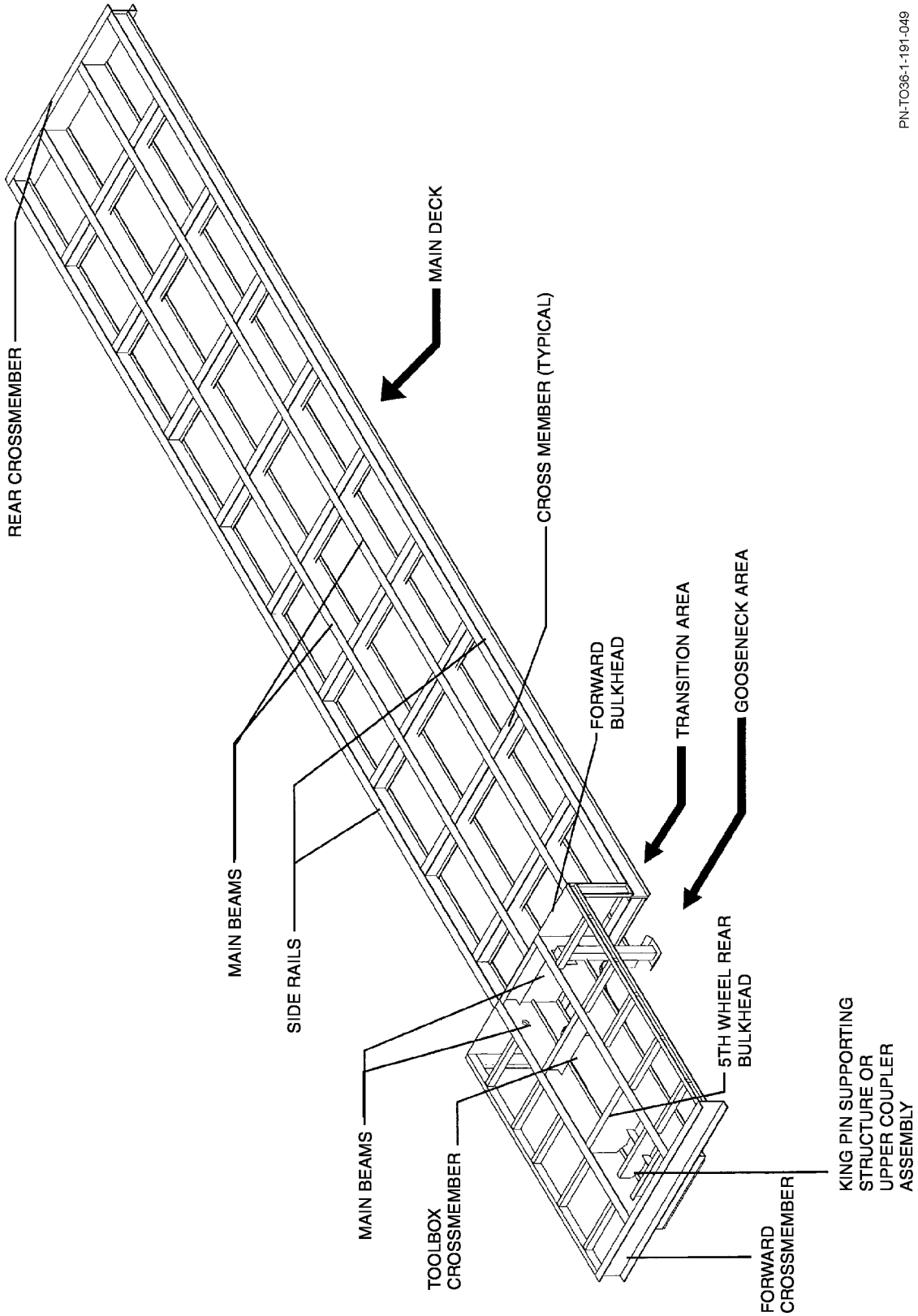

Figure 3-2. Typical Lowbed Trailer Structure (Full Width Gooseneck Shown)

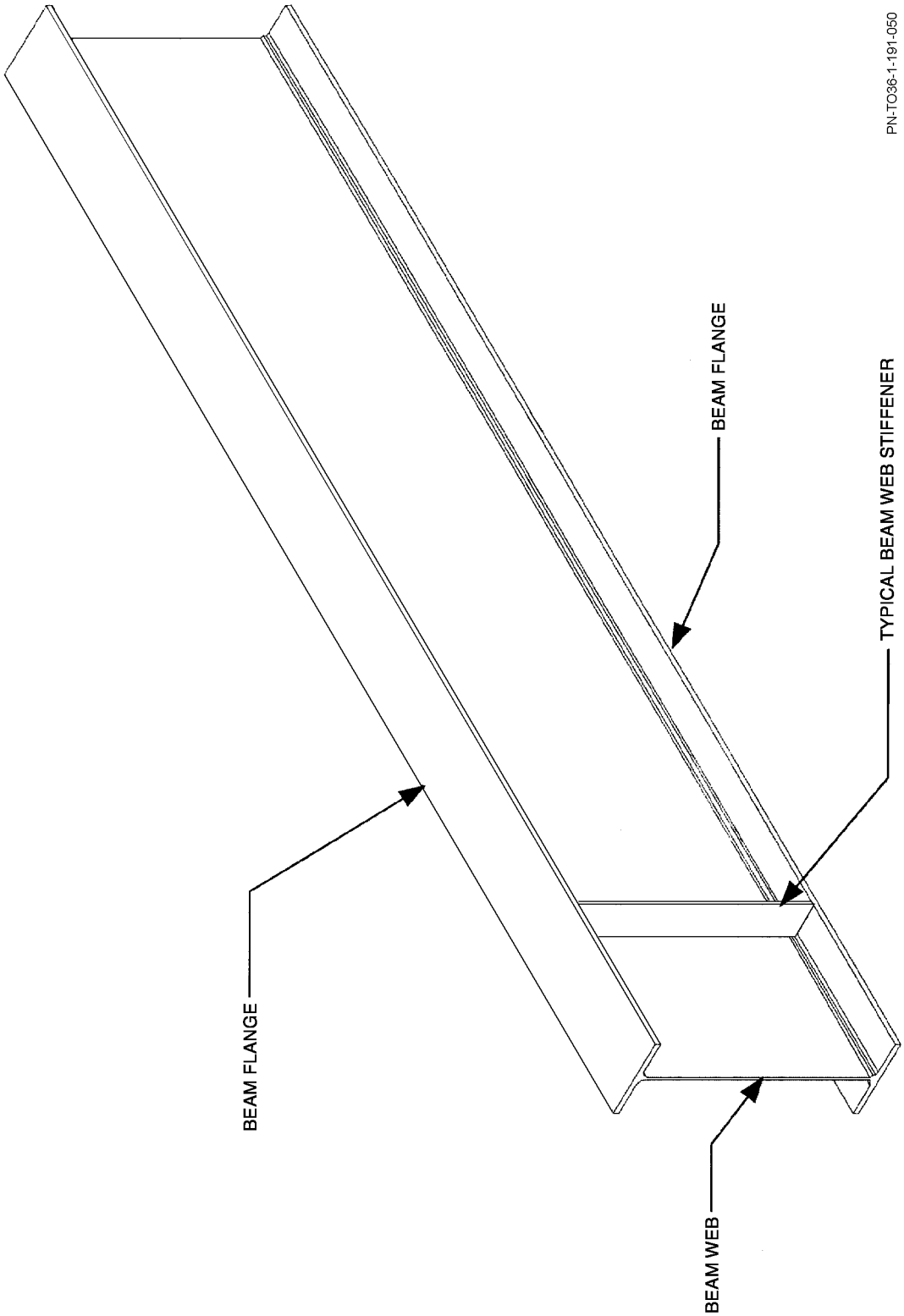

Figure 3-3. Typical Beam Construction

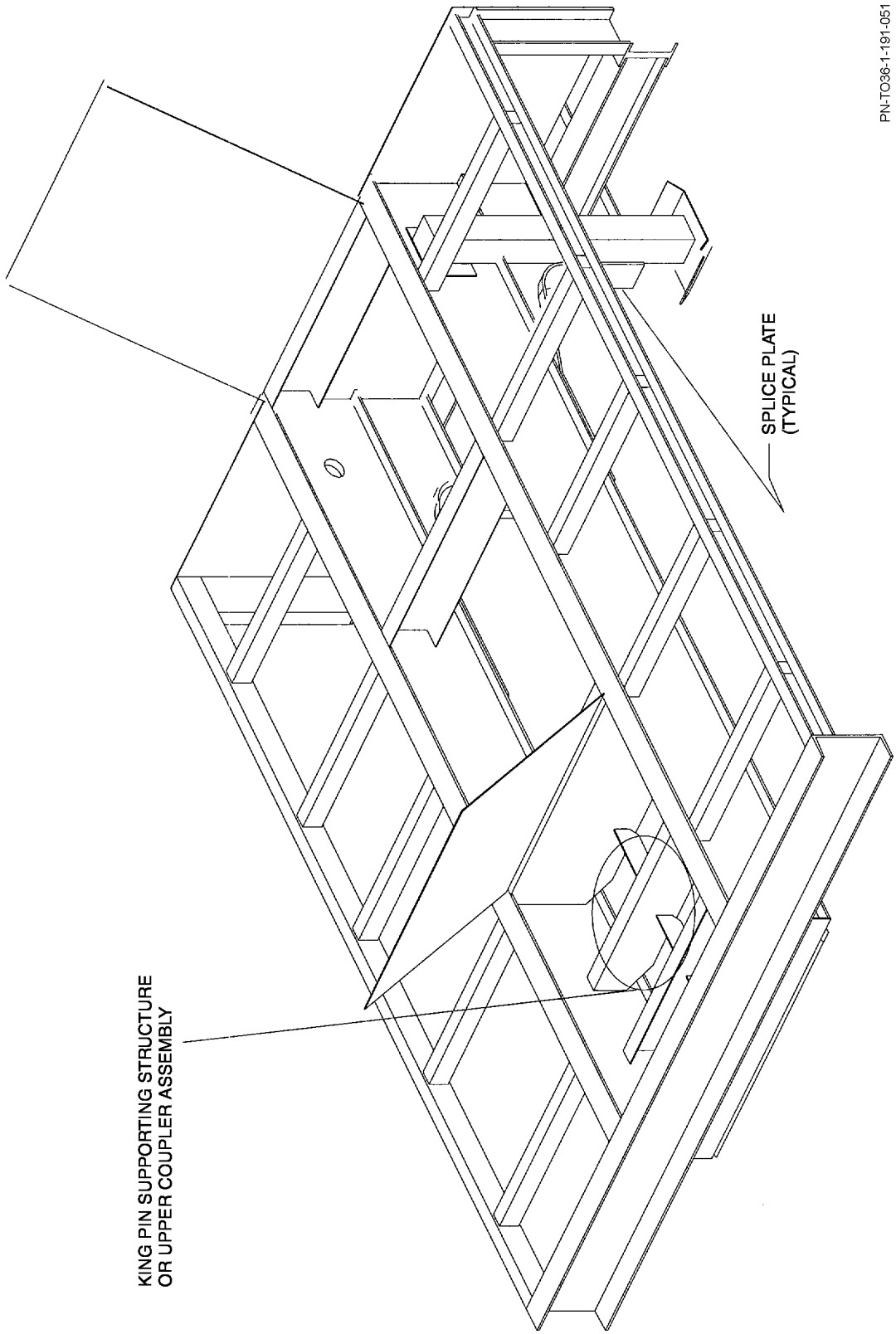

Figure 3-4. King Pin Mounting Area

3.14 RAILWAY EQUIPMENT INSPECTIONS.

Perform and maintain documentation on Federal Railway Administration mandated daily, quarterly, and annual inspections.

3.14.1 Daily Inspections. Daily inspections will include all actions on the DD Form 862, Daily Inspection Worksheet for Diesel Electric Locomotives and Locomotive Cranes.

3.14.2 Quarterly Inspections. Quarterly Inspections should include the following:

3.14.2.1 Air Hoses. Inspect for signs of damage or failure.

3.14.2.2 Battery.

3.14.2.2.1 Clean battery terminals.

3.14.2.2.2 Check batteries for dirt and corrosion. Clean as necessary.

3.14.2.2.3 Ensure proper bracing in battery compartment.

3.14.2.3 Drive Belts.

3.14.2.3.1 Check all for cracks, fraying, and abrasions. Replace as necessary.

3.14.2.3.2 Tighten all fan, air compressor, traction motor blower, and other drive belts within proper tolerances.

3.14.2.4 Engines.

3.14.2.4.1 Check for loose parts and leaks.

3.14.2.4.2 Check low oil pressure, high temperature and over speed warning, and shutdown systems.

3.14.2.4.3 Wipe silver-faced contacts using clean, lint-free cloth. Renew worn contact points as necessary. Renew worn or broken springs. Tighten loose screws, nuts, and connections. With systems de-energized, operate devices manually to detect friction or binding.

3.14.2.4.4 Charging Generator (check for proper output).

3.14.2.4.5 Pedestal and Journal Box Wear Plates (check for damaged or excessively worn wear plates).

3.14.2.5 Electrical Brushes. Check brushes in traction generators, traction motors, and auxiliary generator for excessive wear or damage. Replace as required.

3.14.2.6 Air Gauges. Test all gauges used by the engineer for braking by comparison with a dead weight tester or test gauge designed for this purpose. The maximum error should be 3 psi.

3.14.2.7 Safety Appliances (Ladders, Handholds, Steps, etc.). Check for defects and proper mounting.

3.14.2.8 Air Brake System.

3.14.2.8.1 Check for air leaks and proper operation.

3.14.2.8.2 Check for thickness remaining on brake shoes.

3.14.2.8.3 Check brake linkage (pins and cotters).

3.14.2.9 Head, Beacon, Ground, Cab, Step, and Marker Lights.

3.14.2.9.1 Check for proper operation. Replace bulbs as necessary.

3.14.2.9.2 Check for proper operation of horn and bell.

3.14.2.9.3 Check for proper operation of windshield wipers (replace blades as required).

3.14.2.9.4 Check for proper operation of sanders (adjust as necessary).

3.14.3 Annual Inspection. Annual inspections of locomotives should include all items listed under the quarterly locomotive maintenance plus the following:

3.14.3.1 Inspect wheels for chips, gouges, cracks, flat spots, narrow flange, and high flange and rim. Resurface or replace as necessary.

3.14.3.2 Center Plates and Bearings. Check wear rings and wear plates for excessive wear, cracks, or damage. Repair as required. Lubricate bearings.

3.14.3.3 Side Bearings.

3.14.3.3.1 Check clearance. Adjust as required.

3.14.3.3.2 Renew worn plates and rollers.

3.14.3.4 Flush and refill engine cooling tank.

3.14.3.5 Fuel Oil Tank. Check tank sump for moisture or contamination. Drain and clean as required.

3.14.3.6 Air Brake Filters. Clean, repair, or replace all filtering devices or dirt collectors in the air compressor, air lines, and air reservoir systems.

3.14.3.7 Axle Bearings - Plain Journal.

3.14.3.7.1 Inspect bearing surfaces for pitting, grooving, scoring, or excessive wear. Replace bearings as required.

3.14.3.7.2 Inspect journal box seals. Replace as necessary.

3.14.3.8 Axle Bearings - Roller.

3.14.3.8.1 Inspect bearings for signs of lubricant loss or overheating.

3.14.3.8.2 Tighten axle and screw.

3.14.3.9 Truck Frames, Springs, and Equalizers. Visually inspect truck frames, truck springs, and equalizers for signs of distortion or damage.

3.14.3.10 Gears. Remove lower gear case covers and inspect axle drive gears and pinions for excessive wear or damage. Clean sludge from inside of gear cases. Relubricate gears.

3.14.3.11 Air Brake System Control Valves. Clean, repair, and test the brake cylinder relay valves, feed valves, and reducing valves.

3.14.3.12 Air Compressor. Check for proper output and cycling. Clean, adjust, and lubricate compressor governor.

3.14.3.13 Couplers. Check for proper operation, swing, height, and excessively worn components.

3.14.3.14 Traction Motor Nose Suspension. Inspect for worn or frayed pads and proper pad compression. Ensure nuts are tight and cotter pins are in place.

3.14.3.15 Traction Motor Support Bearing Lubricators. Inspect for proper operation. Relubricate as required.

3.14.3.16 Traction Motors and Traction Generators. Blow out with clean, dry air. Inspect commutator, brush holders, insulators, bands, and connections. Resurface commutator when required.

CHAPTER 4
TIRES

4.1 SAFETY SUMMARY.

The following are general safety precautions that are not related to any specific procedures and therefore do not appear elsewhere in this publication. These are recommended precautions that personnel must understand and apply during many phases of operations and maintenance. Personnel must at all times observe all safety regulations. Some equipment and chemicals have inherent hazards that cannot be mechanically, safeguarded. Personnel must perform these functions with caution.

4.2 SAFETY PRECAUTIONS.

4.2.1 Resuscitation. Personnel working with or near highly toxic chemicals should be familiar with modern methods of resuscitation. Such information may be obtained from base medical services.

4.2.2 Warnings . The following warnings appear in the text of this technical order and are repeated here for emphasis.

4.2.2.1 Buffing Operations. Buffing solvent is flammable and toxic to the skin, eyes, and respiratory tract. Eye and skin protection is required. Avoid prolonged or repeated contact. Good general ventilation is normally adequate. Watch out for ignition sources.

4.2.2.2 Compressed Air. Compressed air used for cleaning can create airborne particles that may enter the eyes. Pressure will not exceed 30 psi. Eye protection is required.

4.2.2.3 Vulcanizing Cement. Vulcanizing cement can be flammable and toxic to the skin, eyes, and respiratory tract. Eye and skin protection is required. Avoid repeated or prolonged contact. Good general ventilation is normally adequate. Watch out for ignition sources.

NOTE

Not all Vulcanizing cement is flammable. NSN 2640-00-138-8320 is not flammable. It contains trichloroethylene so it still must be used in a well ventilated area.

4.2.2.4 Sharp Or Pointed Tools. To prevent injury to personnel, exercise caution when using sharp or pointed tools.

4.2.2.5 Tire Mounting. To prevent injury to personnel or damage to equipment, observe the following mounting precautions.

4.2.2.6 Injury Prevention. To prevent injury to personnel or damage to equipment, always lubricate beads and never exceed 40 lbs of air pressure until the bead is seated. See Paragraph 4.25.2.

4.2.2.7 Air Pressure (Tire). Do not dislodge tire beads, lock-rings or split flange rings until absolutely certain that no air pressure remains in the tire.

4.3 GENERAL.

Motor vehicles depend on pneumatic, semi-pneumatic or solid rubber tires for mobility. Tire technology is expanding rapidly and has reached a point where much more than a cursory glance and candid opinions are necessary to devise a satisfactory tire management program within the Air Force. The constantly changing tire manufacturing processes and their products dictate an up-to-date reference source for tire management.

4.4 PURPOSE.

This chapter provides information and direction for the selection, inspection, service, and control of motor vehicles tires. This chapter reflects policies and guidelines consistent with Presidential Executive Orders and Environmental Protection Agency policies of national interest.

4.5 SCOPE.

This chapter applies to all Air Force activities involved in tire maintenance for Air Force motor vehicles.

4.6 SELECTION OF TIRES.

Vehicle Fleet Managers are tasked with the job of obtaining correct replacement tires for their vehicle fleet. Replacement tires must be selected to match the use application of each vehicle. Replacement tire selection must be based on the user's mission (application) and the Original Equipment Manufacturer's (OEM) operations manual/technical order. This section is intended to provide necessary basic information on tire construction and industry ratings so that logical tire selections can be made. Under no circumstances will replacement tire(s) be of a lesser ply rating/load range than recommended by the manufacturer. Under no circumstances will working air pressure exceed the capacity of the rim. Rims requiring replacement will meet or exceed OEM specifications for the vehicle. When replacing tires with a higher load range (due to local availability), do not exceed rim capacities. OEM vehicle load capacities and gross vehicle weight will not change.

4.7 TIRE CONSTRUCTION MATERIAL.

The term "tire" means a manufactured product made of rubber, chemicals, fabric, and steel, or other materials, which when mounted on a suitable wheel, provides traction and/or sustains the load. The most important tire materials are those used for cord body. These materials determine the strength and maintain the inflated configuration of the tire.

4.7.1 Rayon Fiber. Rayon fiber is used because of low cost, resilience, and the fact that it provides a soft ride. However, it is not as strong as most of the other materials and loses strength when subjected to heat. Rayon will absorb moisture, but it does not have flat spot tendencies.

4.7.2 Polyester Fiber. Polyester fiber is a synthetic fiber, stronger than rayon, but equally resilient. It is more heat resistant and less expensive than rayon

4.7.3 Nylon Fiber. Nylon fiber is a synthetic fiber which is probably the widest used of all cord fibers. It has high heat resistance, excellent impact resistance, minimum flex, and will not absorb water. It gives a harsher ride and will tend toward flat spotting.

4.7.4 Fiberglass. Fiberglass is the newer of tire cord body materials and is used only as a belt or buffer material. It provides excellent cord strength, resists flexing, and provides a cooler running tire, and one that provides long wear.

4.7.5 Steel. Steel wire is being used as a radial cord, as a belt cord, and as an armor material. Steel shavings are imbedded in the underbody as a buffer material. The steel wire cord is used in radial tires, both truck and passenger. Steel wire makes a very strong belt. It provides excellent traction and gives maximum wear for a given thickness of tread.

4.8 LOAD RANGE.

Load range defines the type of service as well as the load carrying capacity based on the category of tire. Under no circumstances will replacement tire(s) be of lesser ply rating/load range than recommended by the manufacturer in the OEM Operators/User's Manual. In the event OEM or WR-ALC deviates from this guidance (through service bulletins, IMCs, TCTOs, etc.), WR-ALC's new guidance takes precedence. Refer to Figure 4-1 for a load range ply rating conversion.

4.9 TIRE CONSTRUCTION.

4.9.1 Conventional Bias Ply. (Figure 4-2) The bias tire is the conventional tire which has been in use since the 1920s. The cords in the plies, or layers, which make up the body of the bias tire crisscross at an angle called the bias angle, usually about 30-40 degrees to the center line. Cords may be arranged in two or more (even number) plies, depending in general on the strength desired in the finished tire. This design provides rigidity in both side wall and tread, but bias tires squirm more and tend to run hotter than belted bias or radial.

4.9.2 Bias Belted. (Figure 4-2). In a belted tire the cords in the body are also arranged in a crisscross pattern; but, in addition, it has two or more layers of fabric or belt under the tread. The cords in the belt also run at an angle, about 25 degrees to the center line. This construction provides a side wall stiffness similar to the bias tire, with increased strength and stiffness in the tread. Body cords are made of rayon, nylon, or polyester; belt cords are made of fiberglass, rayon, or steel. The belted bias tire squirms less than the bias tire, runs cooler, and gives more mileage.

4.9.3 Radial. (Figure 4-2). The radial tire carries a letter number which-has an R in it, such as P205/75R14. The cords in the body run at right angles to the center line and may be arranged in one to three plies. Over this radial section is added a belt made of up to four plies, whose cords run at an angle of about 15 degrees to the center line. The result is a tire with flexible side walls that, even when fully inflated looks as though it needs air, has great stiffness and strength in the tread area. In some radials, the belts are made of steel; in others, fiberglass or rayon. The radial tire, like the belted bias, has minimum squirm, runs cool, and provides long wear.

4.9.4 Special Use Tires. There are many other types of special use tires on the market. Basic construction will fall into one of the above categories, but size, cord materials, compounding ingredients and tread designs (i.e., diamond and mud and snow tread) will vary with the purpose for which they are to be used. Various types of blow-out and puncture-resistant tires are on the market. Some have a steel safety belt underneath the tread. Some have an inner tire separated from the main body of the tire by an air space. Some others are difficult to balance satisfactorily. Foam filled, puncture-proof (battle damage) tires have been used successfully on slow moving construction and 463L vehicles. Their use has proven essential in some combat situations.

4.10 HANDLING CHARACTERISTICS.

Each of the basic tire construction designs have different handling characteristics (Figure 4-3). Handling is also affected by tire size, width, tread design, inflation pressure, and rim width. Bias belted and radial tires may produce over-steer while increasing traction. When compared to conventional tires, they will also accentuate any steering and suspension problems that may exist (Figure 4-4). They should only be used in complete wheel sets and never mixed with

different types unless originally equipped by the vehicle/equipment manufacturer (reference Paragraph 4.18).

4.11 TIRE SIZE RATING.

4.11.1 Bias. Tire sizes are expressed in terms of inflated tire cross section width and rim diameter, i.e., 6.00×13, 6.00 or 6 equals the tire cross section width and 13 equals rim diameter.

4.11.2 Metric. Most small tire sizes are now expressed with a metric designation such as P205/75R14. The P designates a passenger car tire, 205 is the cross section width in millimeters, 75 is the aspect ratio, R is the radial designator, and 15 expresses the rim size in inches.

4.12 TIRE MARKINGS.

4.12.1 General. Much is being done toward regulating the quality and the application of pneumatic tires, most of which will apply to passenger type vehicles. Federal Tire Safety Regulations specify that the following markings must be included on tires manufactured for highway use (Figure 4-6).

4.12.1.1 Size.

4.12.1.2 Maximum permissible inflation pressure.

4.12.1.3 Maximum load rating.

4.12.1.4 Manufacturer's identification by name or by brand name and a specified numeric code marking.

4.12.1.5 Ply cord material.

4.12.1.6 Number of plies in the sidewall and number of plies in the tread, if different.

4.12.1.7 Tubeless or tube type.

4.12.1.8 Note that tire conforms to Federal Motor Vehicle Safety Standards.

4.12.1.9 Radial (if applicable).

4.12.1.10 Tire tread must be molded to include a tread wear indicator 2/32 in tread depth.

4.12.2 Tire Branding. Branding of tires is prohibited.

4.13 TIRE ROTATION.

To realize full tire life potential, tires should be inspected and rotated in accordance with the recommendations in the operators manual, if available, or at 5,000 to 10,000-mile intervals. The first such rotation is the most important one in setting the stage for long, even tread wear. In some instances, if irregular wear begins to develop, rotation will be advisable before the recommended mileage interval. Before rotating, determine the cause of wear and correct any misalignment, balance or other mechanical problem. Earlier and more frequent rotation may also be desirable due to differences in tread wear between front and rear tires. After rotation, adjustment of individual tire air pressure to acceptable car or tire manufacturer's recommendation is required in accordance with the tire's new location on the car. (See Figure 4-7 and Figure 4-8.)

LOAD RANGE	PLY RATING	LOAD RANGE	PLY RATING	LOAD RANGE	PLY RATING
A	2	E	10	J	18
B	4	F	12	L	20
C	6	G	14	M	22
D	8	H	16	N	24

PN-TO36-1-191-052

Figure 4-1. Load Ranges

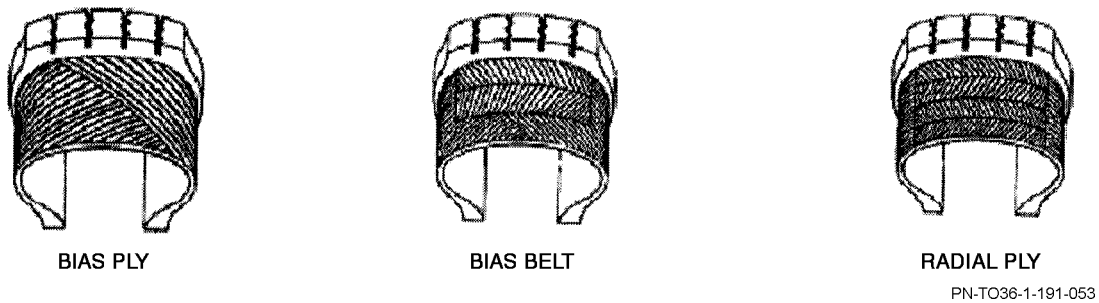

Figure 4-2. Tire Construction

Figure 4-3. Handling Characteristics

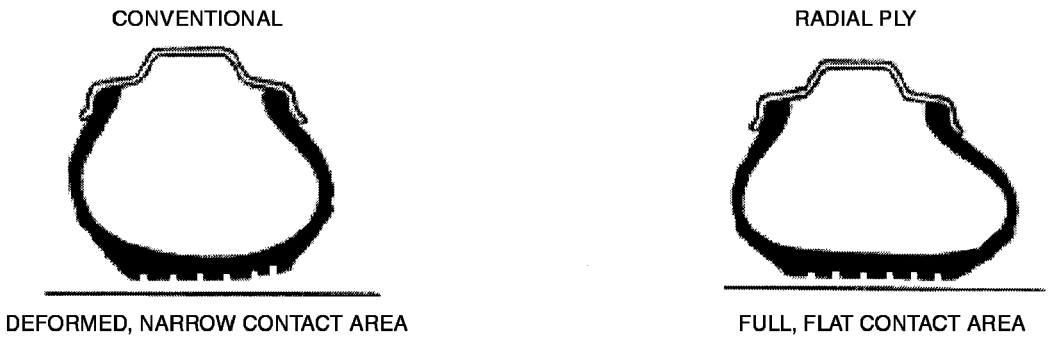

DIAGRAMS SHOW DIFFERENCES IN CONVENTIONAL BIAS PLY TIRES AND RADIAL PLY TIRES WHEN CORNERING. STIFF SIDEWALL OF CONVENTIONAL TIRE LIFTS PART OF THREAD OF THE PAVEMENT. WHEN RADIAL IS PROPERLY INFLATED, IT RESISTS SUCH DEFORMATION DUE TO ALL OF TREAD AREA AND SIDEWALL, WHICH FLEXES MORE EASILY.

PN–TO36-1-191-055

Figure 4-4. Cornering Characteristics

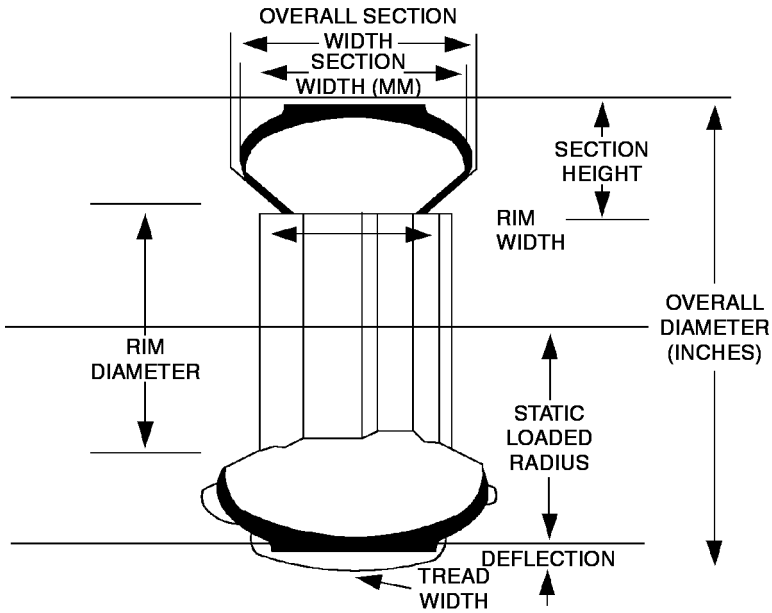

STATIC LOADED RADIUS: DISTANCE FROM THE CENTER OF THE AXLE TO THE GROUND UNDER THE SPECIFIED LOAD AND INFLATION PRESSURE. RIM DIAMETER: DIAMETER OF THE RIM FROM BEAD SEAT TO BEAD SEAT. OVERALL DIAMETER: DIAMETER OF THE TIRE FROM TREAD SURFACE TO TREAD SURFACE WHILE INFLATED BUT UNLOADED. OVERALL SECTION WIDTH: DISTANCE BETWEEN THE OUTER SIDEWALLS OF AN INFLATED TIRE. RIM WIDTH: DISTANCE BETWEEN THE INSIDE OF THE RIM FLANGES. SECTION HEIGHT: DISTANCE FROM THE BEAD SEAT TO THE OUTER TREAD SURFACE OF THE INFLATED TIRE. SECTION WIDTH: DISTANCE BETWEEN THE OUTER SIDE WALLS OF AN INFLATED TIRE, LESS ANY ORNAMENTATION OR CURB RIBS. TREAD WIDTH: THE WIDTH OF THE TREAD SURFACE, DESIGNED FOR CONTACT WITH THE ROAD.

PN–TO36-1-191-056

Figure 4-5. New Tire Dimensions

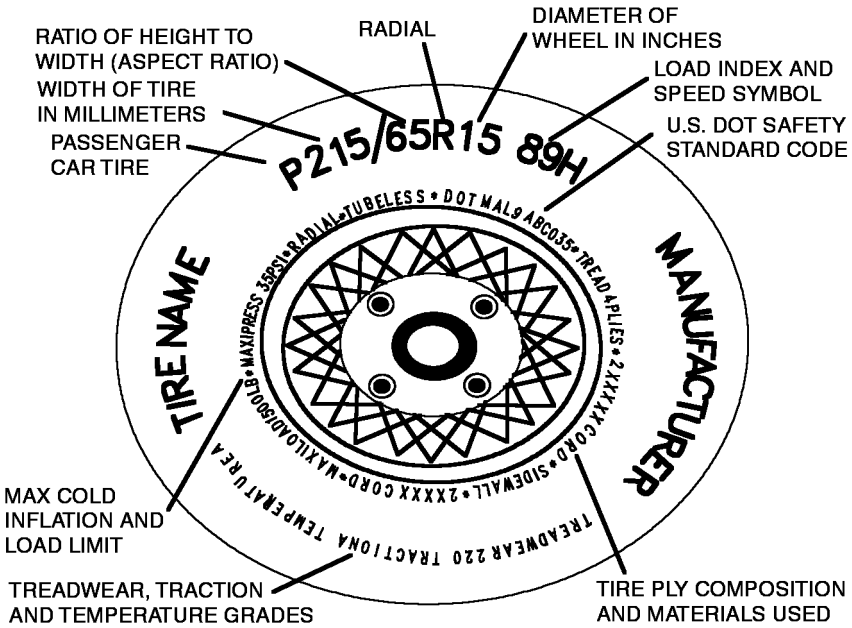

THE TIRE SIZE SHOWN BELOW IS 215/65R16. THE 215 REPRESENT ITS SECTION WIDTH (TIRE WIDTH IN MM). "65" IS THE TIRES "ASPECT RATIO" (THE RADIO OF THE SIDEWALL HEIGHT TO THE TREAD WIDTH). THE "R" REPRESENTS TIRE CONSTRUCTION, IN THIS CASE RADIAL, AND THE LAST ITEM IS THE "15" WHICH REPRESENTS THE RIM/WHEEL SIZE.

PN-TO36-1-191-057

Figure 4-6. Tire Markings

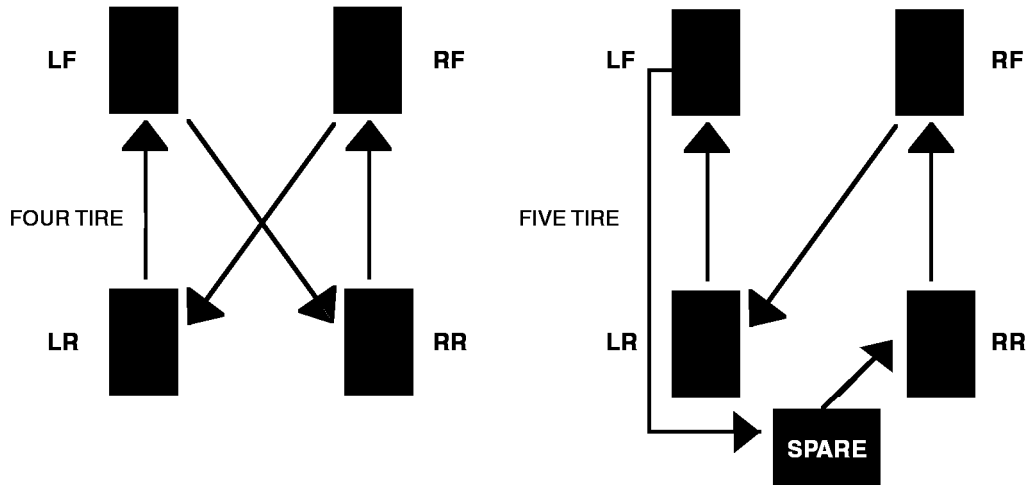

NOTE

WHEN SNOW TIRES ARE INSTALLED, THE REGULAR TREAD TIRES ON THE REAR SHOULD BE MOVED TO THE FRONT AND THE FRONT TIRES STORED. WHEN SNOW TIRES ARE REMOVED, INSTALL STORED TIRES ON THE REAR.

PN-TO36-1-191-058

Figure 4-7. Tire Rotation

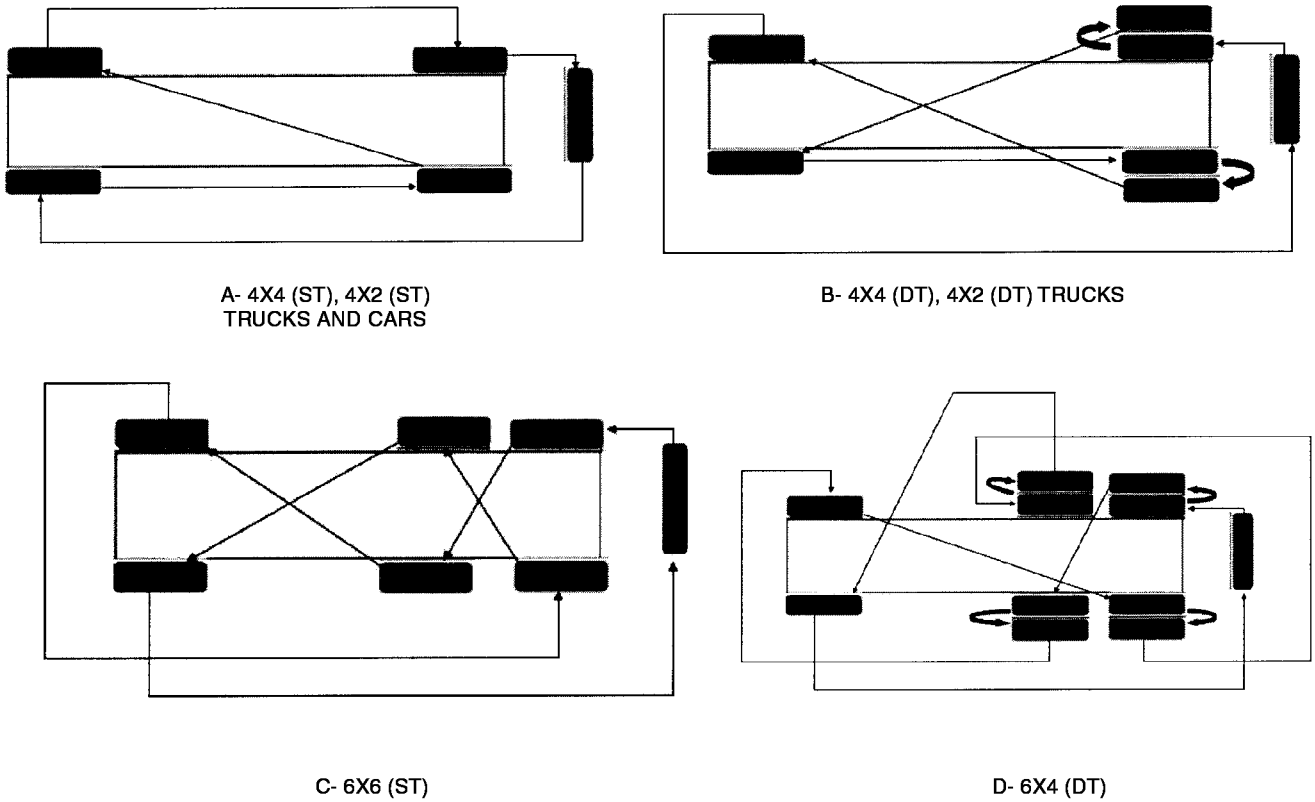

NOTE

INCLUDE SPARE IN ROTATION PROCESS IN ACCORDANCE WITH ESTABLISHED MEASUREMENTS.

PN-TO36-1-191-059

Figure 4-8. Rotation Patterns for Tires

A WHEEL OUT OF BALANCE WHEN STATIONARY CAUSES VIBRATION OF THE CAR DUE TO THE TENDENCY OF THE HEAVIER PART OF THE WHEEL ASSEMBLY TO REMAIN AT THE LOWEST POINT ON THE WHEEL. VIBRATION AT THIS POINT CAUSES "TRAMP" OF BOUNCE - RESULTING IN ROUGH RIDE AND VIBRATION OF MOVING PARTS.

PN-TO36-1-191-060

Figure 4-9. Static Out-of-Balance

A WHEEL OUT OF BALANCE WHEN ROTATING OR WHEN THE TWO HALVES OF A WHEEL ACT IN OPPOSING DIRECTIONS ALONG DIFFERENT PLANES TENDS TO TURN INWARD AND OUTWARDS EVERY ONE-HALF REVOLUTION. TIRE AND CAR DAMAGING SHIMMY IS CREATED.

PN-TO36-1-191-061

Figure 4-10. Dynamic Out-of-Balance

4.14 TIRE BALANCE.

Shaky, shimmying wheels are caused by all or part of the rotating assembly being out of balance. An assembly one ounce out of balance at the tread will develop a sledgehammer pounding at 50 MPH.

4.14.1 There are two main symptoms of out-of-balance, and they are as follows:

4.14.1.1 Tamp or road shock usually occurs at higher speeds and is felt through the steering wheel as vibration that increases with speed. (See Figure 4-9.)

4.14.1.2 Shimmy is a rapid side movement of front wheels which usually is apparent in sidewise vibration of the front end. (See Figure 4-10.)

4.14.2 To correct the Tramp or Shimmy symptoms, a static or dynamic balance is required.

4.14.2.1 Static out-of-balance. (See Figure 4-9.)

4.14.2.2 Dynamic out-of-balance. (See Figure 4-10.)

4.15 WHEEL NUT TORQUE.

Tire shop personnel will obtain wheel nut torque values from manufacturer's service manuals and formulate a chart or quick reference list to be used by personnel mounting tires. This reference will be readily available to the tire shop.

4.16 SAFETY ECONOMY AND SERVICE.

Tires are being offered in increasing numbers of sizes and constructions to provide added safety, improved economy, and special service capabilities. EPA findings indicate that up to a 10 percent fuel savings can be obtained by using radial tires of the largest practical size, and by keeping them inflated to upper inflation limits. Users must, however, avoid intermixing belted bias, radial and bias ply tires on one vehicle. Each type of construction reacts differently under the same load; a mixture may cause sideslip, wandering, fishtailing, etc.

4.17 SELECTION OF PNEUMATIC TIRES.

Carcasses from tires requiring replacement must accompany replacement requisitions on a one-to-one basis. Replacement tires will be selected from base supplies of recapped tires, federal supply lists GSA schedules, or commercial dealer stock, in that order. (Refer to Paragraph 4.23 of this technical order tor directives relative to recapped tires.) Tire type will be determined by application (i.e., passenger car, truck/bus, industrial, etc.) as identified in the description. Select the type tread, ply rating, and type of construction (bias or radial) required, keeping in mind the information discussed in Paragraph 4.7 through Paragraph 4.9.

NOTE

Effective tire management requires matching the tire of the vehicle to its mission. Initial cost should be a secondary consideration to maximum safety/maintenance and economy/energy efficiency.

4.17.1 Steel Belted Radial Tires. For general purpose use, steel belted radial tires will yield maximum life cycle safety/economy.

4.17.2 Non-Radial Tires. Non-radial tires should be replaced by steel radials on an attrition basis unless vehicle and tire manufacturer recommend other constructions for special purpose/use.

4.18 TIRE REPLACEMENT.

4.18.1 Purchase new radial tires in complete sets for use on one vehicle where possible.

4.18.2 Avoid purchasing new tires of non-radial design for general purpose use. Use existing non-radials by cross switching between vehicles similarly equipped.

4.18.3 Use radials and belted 60, 70, and 78 series in complete sets.

4.18.4 Do not mix tire sizes on the same vehicle unless so directed by manufacturer's recommendation or operational necessity. Snow tires should be of the same size and construction as those on the non drive axle.

4.18.5 The VFM may approve the use of either light truck or passenger car tires for commercial pickup trucks according to vehicle mission and projected gross vehicle weight as long as load range is equal to or higher than the type listed in the OEM Operations/User's Manual. In the event OEM or WR-ALC deviates from this guidance (through service bulletins, IMCs, TCTOs, etc.), WR-ALC's new guidance takes precedence.

4.18.6 Tires on tactical vehicles (M-Series) will normally be replaced with original equipment tread design (NDMS or NDCC). If these vehicles are not used in tactical support missions, the VFM may approve the use of commercial mud/snow or highway tread design.

NOTE

Changes in these general rules can be made in response to manufacturer's recommendations for special vehicles/loads/missions.

4.19 BREAK-IN.

New tires should have a break-in period. Limit speed to 55 MPH for first 50 miles. Avoid rapid acceleration or hard braking.

4.20 TIRE MANAGEMENT.

Inflate radial tires to the maximum pressure recommended by the manufacturer for the specific vehicle, tire, and mission. Use inspection methods of Paragraph 4.22 to determine proper tire pressure/maintenance. Adhere strictly to the following guidelines:

4.20.1 Never exceed maximum pressure shown on the tire sidewall or capacity of rim, unless directed by the manufacturer's service guidance. In the event OEM or WR-ALC deviates from this guidance (through service bulletins, IMC, TCTO, etc.), WR-ALC's new guidance takes precedence. (See Figure 4-6.)

4.20.2 Never operate vehicles with tires under-inflated. Abnormal heat buildup and tread edge wear can result from under-inflation. Tread print can serve as an indication of proper tread contact for a given tire and load. (See Figure 4-4.)

4.20.3 When tires of a different make or tires of different tread wear are used, either the diameter or circumference should be measured after mounting and inflation. Never over-inflate or under-inflate a tire to compensate for tire measurement variations. See Table 4-1 for matching dual tire variation tolerances.

4.20.4 When dual tires have a permissible difference in measurements, the larger size tire should be mounted outside. Ensure dual mounted tires do not make physical contact with each other when mounted. A minimum of 1/4 inch separation is required. This will prevent unnecessary heat buildup and possible tire failure.

4.20.5 Valve Positioning and Capping.

4.20.5.1 Valves should be properly centered in valve holes and slots to prevent scraping against brake drums.

4.20.5.2 Valves should be placed so they extend through the wheel.

4.20.5.3 Valves on inside duals should point away from the vehicle and valves on outside duals should point toward the vehicle.

4.20.5.4 Each valve stem will be equipped with an approved valve stem cap to prevent dirt from entering the valve mechanism and to reduce the chance of leakage. Coordinate this requirement with the base FOD officer concerning flightline vehicles.

4.20.5.5 The use of metal valve stem caps is not authorized. Metal caps will be disposed of and replaced with plastic caps.

NOTE

Types of tread designs are defined as regular highway, mud and snow, lug, diamond, ribbed, etc. Different retreaders or manufacturers tread design of the specific type may be intermixed on the same axle of vehicles. Different types of tread designs may be intermixed on the same axle of slow moving non-self-propelled equipment.

4.21 INSPECTION AND SERVICING.

Tire inspections and servicing are essential in obtaining maximum tire use. The guidelines furnished below are those that will ensure economic and safe tire utilization. These procedures should be locally altered when it is beneficial to the Air Force. However, the altering of these procedures should never result in a potential injury to personnel or impede equipment mission accomplishment or safety.

4.21.1 Nitrogen filled tires: Some new, commercially manufactured base maintenance vehicles are equipped with nitrogen filled tires. The advantages of nitrogen are a longer service life for the tire and lower fire/explosion potential during hot weather/high heat conditions. These tires can be serviced with standard nitrogen servicing equipment such as that used to service accumulators on 463L equipment. Only trained vehicle management personnel will accomplish this. Vehicle operators may check tire pressure if they have a pressure gauge suitable for nitrogen valve stems but they

will not add nitrogen to the tires. Vehicle Management technicians will stencil Nitrogen filled tires do not service to each fender well and each inner rim near the valve stem.

4.22 IN-USE INSPECTION.

4.22.1 Operator Inspection. Primary responsibility of detecting and reporting defects in the vehicle tires is placed upon the operator and/or the using organization. These inspections are:

4.22.1.1 Presence of valve caps, evidence of breaks, deep cuts, imbedded glass or nails, bulges or other potentially hazardous conditions.

4.22.1.2 Tread wear as indicated by visible wear indicators across the tire tread or measured by a depth gauge in a major tread groove. Minimum tread depth is 2/32 inch. The front tires of trucks, 10,000 GVW and greater; operated primarily off base at speeds greater than 35 MPH shall have at least 4/32 inch tread depth.

NOTE

Major tread is defined as any portion of a tire that is grooved and designed to make contact with the road surface. Any part of the tire that is subject to wear by rubbing against the pavement or ground.

4.22.1.3 Daily inspection for adequate inflation will be determined by a visual inspection unless otherwise stated in equipment manual. Tires on equipment with duals will be pounded with a hammer or tool to determine if air pressure is present. Check tire inflation pressures when tires are cold. In addition to the visual inspection, radial tire pressure will be checked with a gauge if handling problems are experience.

Table 4-1. Tolerance In Matching Dual Tires

	Permissible Difference	
Outside Diameter of Tire	Diameter	Circumference
Under 30 inches	1/4 inch	3/4 inch
From 30 to 40 inches	3/8 inch	1-1/8 inch
From 40 to 50 inches	1/2 inch	1-1/2 inch
Over 50 inches Type	3/4 inch	1-3/4 inch

Table 4-2. Measuring Procedure for New Tires

Type	Procedure
FOR PASSENGER CAR (EXCEPT “P” TYPE)	Before measuring, tires shall be mounted and inflated to 24 psi for Load Range B, to 28 psi for Load Range C and to 32 psi for Load Range D, and allowed to stand 24 hours minimum at normal room temperature, and inflation pressure readjusted to 24 psi (Load Range B), 28 psi (Load Range C) and 32 psi (Load Range D).
FOR “P” PASSENGER CAR TIRES	Before measuring, tires shall be mounted and inflated to 26 psi for Standard Load and 32 psi for Extra Load, allowed to stand 24 hours minimum at normal room temperature and inflation pressure readjusted to 26 psi for Standard Load and 32 psi for Extra Load.
FOR OTHER PASSENGER CAR	Before measuring, tire shall be mounted and inflated to the pressure for the maximum load (for duals if listed), allowed to stand for 24 hours minimum at normal room temperature, and inflation pressure readjusted to the pressure for the maximum load.
FOR “T” TYPE PASSENGER CAR TIRES	Before measuring, tires shall be mounted and inflated to 60 psi, allowed to stand for 24 hours minimum at normal room temperature and inflation pressure readjusted to 60 psi.

Table 4-2. Measuring Procedure for New Tires - Continued

Type	Procedure
FOR "AT" ALL TERRAIN VEHICLE TIRES	Before measuring, tires shall be mounted on an approved rim and inflated to the tire version pressure: • 1-star = 20kPa (3 psi) • 2-star = 30kPa (4 psi) • 3-star = 40kPa (6 psi) Allow tire to stand for 24 hours at normal room temperature and inflation pressure readjusted to original pressure.

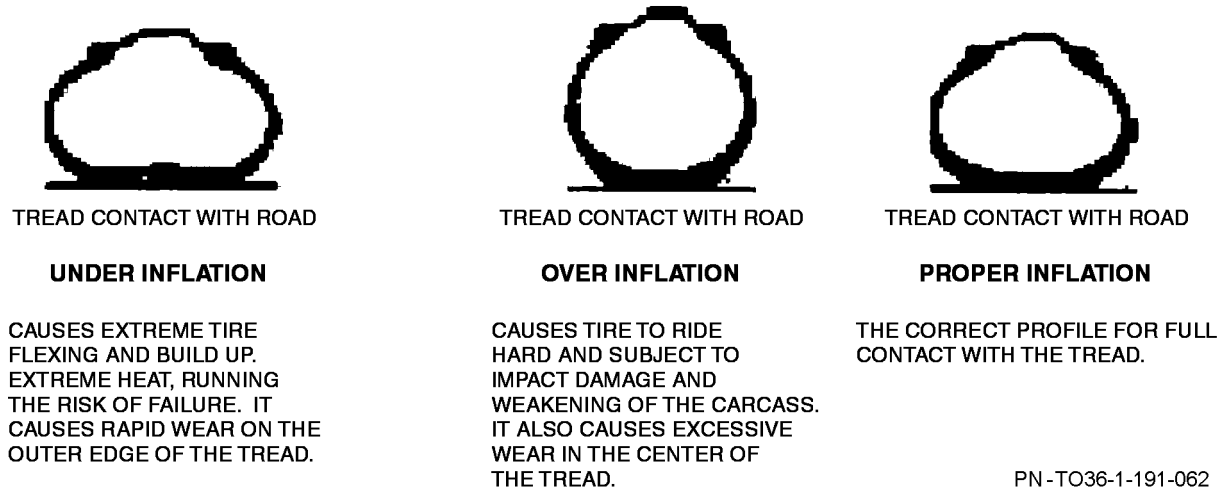

Figure 4-11. Stages of Tire Inflation

4.22.1.4 Vehicles (all types, general and special purpose) tires and spares, if applicable, will be gauged, adjusted, and recorded monthly by the operator on the Operator's Inspection Guide and Trouble Report form as required by AFI 23-302. Vehicle operators may check pressure of nitrogen filled tires if they have a pressure gauge suitable for nitrogen valve stems, but they will not add nitrogen. Vehicle management technicians will service nitrogen filled tires. Tires will be gauged cold and side wall pressure will not be exceeded. Use the pressure for the size/type tire and load as specified in the Manufacturer's Guidance. If this information is not provided on the data plate, or if there is a conflict between the data plate, the stenciled tire pressure and/or Manufacturer's Guidance, report the discrepancy to vehicle management to ensure the correct pressure is stenciled on the vehicle according to Chapter 2. Vehicle management will correct all erroneous data. When recommended by the Manufacturer's Guidance, tire pressure should be temporarily increased (without exceeding maximum side wall pressure) while operating with heavy loads or for sustained highway operation. Stenciled tire pressure shall not be changed when tire pressure is temporarily increased, but will be changed if the vehicle is primarily operated under heavy load conditions.

4.22.1.5 When the correct tire pressure is not available through all other sources, contact local dealer, MAJCOM, or equipment specialist at 580 CBSS/GBL.

4.22.2 Maintenance Inspection. (See Figure 4-16) When a vehicle is in for a scheduled inspection, or a mounted tire is brought in for repair, visually inspect and replace if any of the following are present:

4.22.2.1 A break or cut exposing the body cords.

4.22.2.2 A bump or bulge.

4.22.2.3 Tire tread or side walls cracked or deeply weather checked, exposing cords or endangering vehicle safety. Tires made of nylon polyester cord need not be replaced if weather checked.

4.22.2.4 Tread is worn to 2/32 inch. Military tread tires will be removed when tread design is worn smooth in the center.

4.22.2.5 Abnormal wear. Rotate abnormally worn tire and correct cause of abnormal wear.

4.22.3 Tire Shop Inspection.

4.22.3.1 All tires in for repair will be inspected along with tube or tubeless tire valve stem and wheel prior to mounting.

4.22.3.2 Prior to mounting all tires new, used or retreaded, shall be inspected for bead damage, cracks, cord damage, ply or tread separation, sectional repairs and quality or workmanship.

4.22.3.3 New and retreaded tires found defective will be returned to the source of supply for adjustment/replacement.

4.22.3.4 Inspect the inside and outside of retreaded tires for defects or substandard quality prior to mounting. A retreaded tire will not be mounted on a wheel if any of the aforementioned defects are prevalent.

4.22.3.5 Inspection of carcass prior to retreading.

4.22.3.5.1 No tire, except as indicated below, will be submitted for retreading when a break, cut, or other defect would require repair or sectioning prior to retreading.

4.22.3.5.2 Earth mover tires having more than three radial cracks must be rejected, unless they can be cured with sectional repair.

4.22.3.5.3 Circumferential cracks found in the inner (band) ply, of the bead, or in the shoulder area will render a tire unsuitable for retreading.

4.22.3.5.4 Any tire which is so worn that the cords will be exposed during the buffing operation will not be retreaded.

4.22.4 Base Storage Inspection.

4.22.4.1 The shelf-life assigned to NSNs by source manager will not be imposed at base/user level.

4.22.4.2 To the extent possible, older stock will be used first.

4.22.4.3 Base inbound inspectors will tag tires serviceable/unserviceable with final acceptance/rejection being made by the tire shop during mounting or repair.

4.23 RETREADING TIRES.

USAF policy requires the use of retread tires to the maximum extent possible. Buy new tires only when original tire carcasses are too worn to retread, retreads are not available, or retreads will not meet the minimum performance or quality standard for their intended function.

4.23.1 Technical Criteria.

4.23.1.1 Physically inspect tires to ensure that they meet the condition criteria for retreading.

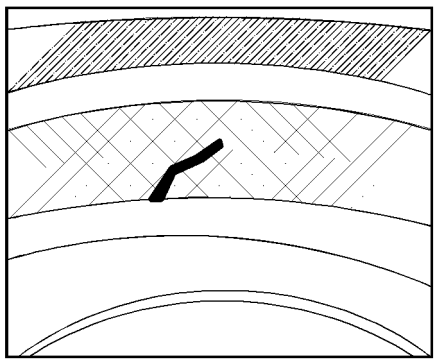

WARNING

THIS TIRE WAS DRIVEN A SHORT DISTANCE WHILE FLAT. DAMAGE WAS NOT VISIBLE FROM THE OUTSIDE.

PN-TO36-1-191-063

Figure 4-12. An Example of Tire Abuse

4.23.1.2 The same tire may be retreaded any number of times if the carcass is free of defects which render it unacceptable for retreading.

NOTE

It is not necessary to insert inner tubes in properly retreaded tubeless tires.

4.23.2 Economic Factors.

4.23.2.1 Limit the unit cost for retreading to 100 percent of the acquisition cost of a new replacement tire. Include transportation charges in the cost analysis when those costs are documented and will drive the cost of the tire above the new tire cost.

4.23.2.1.1 If the projected or actual cost of retreading exceeds the 100 percent limitation, ask the contracting officer to consider alternative sources for retreading service.

4.23.2.1.2 The VFM is authorized to waive the 100 percent limitation when the benefits from retreading will equal or exceed that of a new tire or if new replacement tires are not available when needed.

4.23.2.2 Specify that contractors use the cold process retread method when possible and economically advantageous, considering transportation cost. Tests have shown that cold process retreads are generally less costly per mile, allow repeated retreading, have a higher life expectancy, and are normally readily available.

4.23.2.3 Do not retread tires for which there is no foreseeable requirement. LRS Distribution Flight is responsible for tire inventory management, using DIFM procedures. Vehicle Fleet Managers must be closely involved in the base tire management program.

4.23.3 Restrictions on the Use of Retreaded Tires.

4.23.3.1 Retreaded tires will not be used on ambulances.

4.23.3.2 Retreaded tires will not be used on Law Enforcement sedans.

NOTE

Law Enforcement sedans are received from manufactures equipped with high pursuit radial tires. When these tires require replacement, they will be replaced with standard radial tires of a comparable size.

4.23.3.3 Retreaded tires will not be used on front wheels of buses.

4.23.3.4 Retreaded tires will not be used on any vehicle when their use would seriously impair mission support or create a safety hazard. Organizations experiencing serious operational difficulties or safety hazards attributable to retreaded tires may use new tires on passenger and cargo vehicles if they operate regularly off base at sustained highway speeds. This decision, however, must be supportable through fully documented failure history. Failures of retreaded tires will be reported to the contracting officer. High failure rates should be reported to the contract administrator.

4.23.3.5 Tenant vehicles will be required to use retreaded tires on the same basis as host base vehicles. Exceptions will require a request from the major command headquarters for the tenant concerned.

4.23.3.6 Check federal, state and local laws before using retreaded tires. Some states restrict the use of retreads based on wheel or tire type.

4.23.4 Procedures for Obtaining Retread Services.

4.23.4.1 Overseas: Through Interservice Support Agreement or contract maintenance. (Federal Specification ZZ-T-0041 or other equal standards will be used.)

4.23.4.2 CONUS: Through contract maintenance, using Federal Supply Schedule (FSG 26) as a guide. These schedules are negotiated yearly by GSA region; however, this does not restrict the VFM from utilizing local businesses that are economically competitive and within a reasonable distance. Normally, vehicle management will process tires to contract maintenance. The VFM will be the determining authority on which source will be used.

4.23.4.3 All efforts will be made to ensure original carcasses are returned. This will aid in the recapping effort.

4.24 REGROOVING TIRES.

Regrooving of tires is optional as a means to cut operational cost. Check federal, state, host nation and local laws before using regrooved tires. Some state and countries restrict the use of regrooved tires.

4.24.1 Technical Criteria.

a. Vehicle management activities will ensure tire regrooving is in compliance with the Code of Federal Regulations (CFR) Title 49-Transportation, Chapter V, National Highway Traffic Safety Administration (NHTSA), Department of Transportation, Part 569-Regrooved Tires (http://a257.g.akamaitech.net/7/257/2422/05dec20031700/edocket.access.gpo.gov/cfr_2003/octqtr/pdf/49cfr569.1.pdf).

b. Develops an Operating Instruction that addresses tire regrooving policy, tracking procedures, training and qualifications, and equipment use, inspection and care. Failure of regrooved tires will be reported to the VFM/VMS immediately.

c. Physically inspect tires to ensure that they meet the condition criteria for regrooving.

d. The tires may only be regrooved once and will be evaluated for retreading once the regrooved tire is worn.

NOTE

It is not necessary to insert inner tubes in properly regrooved tubeless tires.

4.24.2 Restriction on the Use of Regrooved Tires.

a. Regrooved tires will not be used on ambulances law enforcement sedans or fire fighting vehicles.

b. Regrooved tires will not be used on front wheels of buses.

c. Regrooved tires, or any combination thereof, will not be used on any vehicle when their use would seriously impair mission support or create a safety hazard.

4.25 SERVICING RADIAL TIRES.

Proper tire maintenance and servicing is mandatory for radial tires as improper mounting and under-inflation can severely reduce tire life. Radial tires have an inherent bulge, making it impossible to visually judge air pressure. The only sure way to determine if a tire is properly inflated is to check it with a gauge. Regular air pressure checks are absolutely essential to ensure maximum service life from any tire.

4.25.1 Mounting. Inspect wheel after wire brushing inside wheel flange. All bead seats must be free of dirt and rust.

4.25.1.1 Remove all wheel weights.

4.25.1.2 If evidence of distortion or impact damage exists, measure wheel for runout.

4.25.1.3 If wheel flange is bent, replace the wheel.

4.25.1.4 New valve stems, cores, and caps shall be installed before new tires are fitted to wheel. Only plastic stem caps will be used on any government owned or leased vehicle.

4.25.2 Lubrication. Lubricate tire beads with liberal amount of approval rubber lubricant. Beads must be lubricated in mounting and demounting to prevent bead damage. Ensure the portion of bead opposite the tire tool is inside the wheel flange prior to mounting, then mount in the usual manner. DO NOT ALLOW the tire to hang up on the tire tool. Relubricate bead, if necessary. Without valve core, inflate tire to 40 psi. Deflate. Install valve core and inflate to recommended tire pressure. Carefully check bead-to-rim seat. Tire bead-to-rim clearance should be the same around the circumference. Repeat this process if bead has not seated. A radial tire with all improperly seated bead will cause vibration.

4.25.3 Balancing. Balance tires, referring to balancing procedure in service manual for vehicle being serviced.

4.25.4 Inflation.

4.25.4.1 Always follow model year recommended tire pressure ratings.

NOTE

Under-inflation can lead to tire bead chafing, thereby causing a slow leak. A slow leak condition is aggravated by use of wide rims and cold weather.

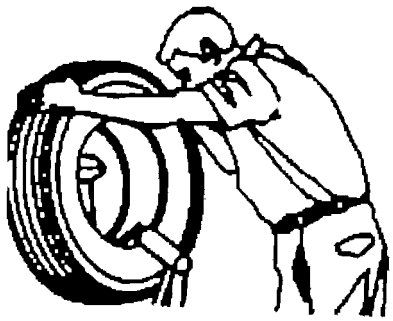

PN-TO36-1-191-064

Figure 4-13. Inspecting a Tire for Casing Damage

4.25.4.2 Vehicles (all types, general and special purpose) tires and spares, if applicable, will be air gauge checked at least once a month.

4.25.4.2.1 Use an accurate calibrated air gauge.

4.25.4.2.2 Check pressures when tires are cool.

4.25.4.2.3 Check pressure more often in cold weather which may cause dangerously low pressure drops.

4.25.4.2.4 For sustained highway driving, increase inflation 4 psi above the recommended pressure, but do not exceed the maximum inflation stamped on the tire side wall.

TIRE MOUNTING WARNING

FAILURE TO COMPLY WITH THESE PROCEDURES MAY RESULT IN FAULTY POSITIONING OF THE TIRE AND/OR RIM PARTS, AND CAUSE THE ASSEMBLY TO BURST WITH EXPLOSIVE FORCE, SUFFICIENT TO CAUSE SERIOUS PHYSICAL INJURY OR DEATH. NEVER MOUNT OR USE DAMAGED TIRES OR RIMS.

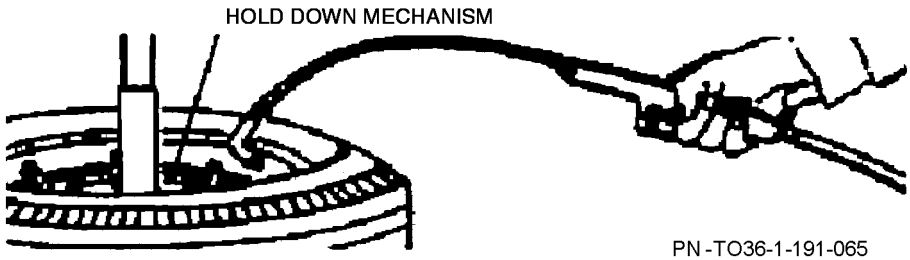

Figure 4-14. Using the Extension Hose to Inflate a Tire

4.26 REPAIR PROCEDURES FOR TIRES.

4.26.1 Punctures. Tread punctures, nail holes or cuts up to 1/4 inch must be repaired from the inside of the tire. The repair material used must seal the inner liner and fill the injury to be considered a permanent repair. Industry approved repair methods include a combination of plug and patch; chemical or hot vulcanizing patches and head-type plugs all applied from inside the tire. If a tire continues to lose air, or has lost all or most of its air pressure, it must, be removed from the wheel for complete internal inspection to be sure it is not damaged.

NOTE

There are several compounds available that can be introduced into a tire to automatically seal - a puncture and prevent a flat tire. In areas where punctures are prevalent, (range operations, etc.) use of one of these materials should be considered.

4.26.1.1 Never repair tires worn below 2/32 inch tread depth.

4.26.1.2 Never try to repair tires with tread punctures larger than 1/4 inch in-house. Repair of side walls, bead sectioning, and large cuts will normally be available through the local recapping agency. All efforts will be made to effect repairs and recap damaged tires. Reduction of recyclable wastes and conservation of funds will be the determining factors. Off-road tires are more adaptable to these type repairs than auto/truck tires.

NOTE

Puncture repairs should be restricted to tread area.

4.26.2 Evaluation and Preparation.

4.26.2.1 Inspection. Before repairing, remove nail or other puncturing objects from tire. With tire inflated, apply soap solution to damaged area to determine if air loss is from one or more punctures. Deflate the tire, unseat the beads, and apply approved bead lubricant. Then remove tire from wheel carefully to avoid further damage to the tire, particularly to the bead, and place on spreader.

4.26.2.2 Probing. Probe puncture with blunt, smooth surface awl or other hand probing tool to determine size and direction of injury, making sure no foreign material is left in the injury.

4.26.2.3 Internal Examination. Bulge tire on spreader marking the puncture with tire crayon. Inspect for evidence of other damage, e.g., in the bead area. Care should be used not to enlarge the injury.

4.26.2.4 Cleaning. Clean punctured area thoroughly with chemical buffer/cleaner, covering a slightly larger area than required for patch. Make certain that no loose or frayed wire ends protrude through the liner.

WARNING

Buffing operations create airborne particles. Eye protection consisting of safety goggles is required. Compressed air used for cleaning can create airborne particles that may enter the eyes. Pressure will not exceed 30 psi. Eye protection is required.

4.26.2.5 Buffing. Buff cleaned area thoroughly, to a smooth, velvet surface, taking care not to gouge liner or expose casing fabric. Remove dust from buffing with an approved method.

4.26.3 Repair Procedures. After completing basic preparation, finish repair by selecting one of the following three repair methods:

4.26.3.1 Chemical Vulcanizing Repairs.

4.26.3.1.1 Fill Injury. The injury must be filled with contour conforming material following manufacturer's instructions. Cut off material flush with inner liner.

WARNING

Vulcanizing cement is flammable and toxic to skin, eyes and respiratory tract. Skin and eye protection is required. Avoid repeated or prolonged contact, Good general ventilation is normally adequate. Avoid all sources of ignition.

4.26.3.1.2 Cementing. Always use self vulcanizing cement recommended by the patch manufacturer. Apply a thin, coating of chemical vulcanizing cement to the prepared and buffed surface. Allow to dry thoroughly. Keep dirt and other impurities from contaminating the cement remaining in the can.

4.26.3.1.3 Patch Application. Remove backing from non-reinforced patch and center over injury. Stitch patch down thoroughly with stitching tool, working from center out.

4.26.3.2 Hot Vulcanizing Repairs.

4.26.3.2.1 Fill Injury. The injury must be filled with contour conforming material following manufacturer's instructions. Cut off material flush with inner liner.

4.26.3.2.2 Cementing. Always use the cement recommended by the patch manufacturer. Apply thin coat of recommended cement to the prepared and buffed surface. Allow to dry thoroughly.

4.26.3.2.3 Patch Application. Apply hot vulcanizing patch and cure according to manufacturer's recommendations.

4.26.3.3 Head-Type Plug Repairs.

4.26.3.3.1 Cementing. Always use the cement recommended by the plug manufacturer. Apply a thin coat of chemical vulcanizing cement to the prepared and buffed surface. Allow to dry thoroughly.

4.26.3.3.2 Plug Insertion. Remove backing from stem and plughead. Pull through according to manufacturer's recommendations.

WARNING

To prevent injury to personnel, exercise caution when using sharp or pointed tools.

4.26.3.3.3 Stitching. Stitch plughead down firmly with stitching tool, working from center out.

4.26.3.4 Finished Repair. There are a number of satisfactory methods of repair. Regardless of type of repair used, finished repair should seal the inner liner and fill the injury. After inflating, check finished repair with water or soap solution to assure complete seal.

WARNING

Observe tire mounting precautions in Paragraph 4.26.3.4.1 through Paragraph 4.26.3.4.9 below.

4.26.3.4.1 Clean rim.

4.26.3.4.2 Lubricate both tire beads with approved lubricant.

4.26.3.4.3 Lubricate bead ledges and flanges of rim.

4.26.3.4.4 Center tire on rim.

4.26.3.4.5 Use extension hose with gauge and clip-on chuck. See Figure 4-14.

4.26.3.4.6 Stand clear.

4.26.3.4.7 Never exceed 40 psi.

4.26.3.4.8 If beads do not seat, remove valve core, re-lubricate, re-position, and re-inflate.

4.26.3.4.9 Check repair for leakage with water or soap solution and adjust air pressure to recommended levels.

4.27 MOUNTING AND DEMOUNTING TUBELESS TIRES.

(See Figure 4-15.)

4.27.1 Demounting.

4.27.1.1 Remove tire and wheel assembly from car.

4.27.1.2 Place tire and rim on machine or floor with a narrow bead ledge of the rim up. (See Figure 4-20, views A. and B.)

4.27.1.3 Deflate tire by removing the valve core from valve stem.

4.27.1.4 Use liberal amount of approved rubber lubricant on the tire beads.

4.27.1.5 Actual demounting must be done carefully. Never attempt to force bead into drop center well at one spot. Inch it off a little at a time, working around the tire to prevent damage to the beaded area.

4.27.1.6 For preparation of the rim, check the rim to be sure it is in good condition and free of rust. Remove any rust or other accumulation of foreign material with a wire brush.

4.27.1.7 It is important to carefully inspect the valve. Worn valves should not be reused, Install valve. Use valve designated by vehicle manufacturer since valves vary as to length and diameter.

4.27.1.8 Lubricate tire beads and rim flanges and bead ledge area with a liberal amount of approved rubber lubricant. Properly lubricated beads will seat themselves quickly and easily with minimum air pressure.

4.28 TUBE-TYPE TIRES.

Inspect tires for nails, glass or other injurious Particles in tread (see Figure 4-16). Inspect for tread wear, cuts in fabric, fabric breaks or damaged beads and do not install tires unless satisfactory for service. Remove any dirt and foreign material from inside of tire.

4.29 INNER TUBES.

Check tubes for punctures, pinches, cuts, and cracks (see Figure 4-18). Inspect valves for proper bend and condition of inside and outside treads. New tubes may not have valves with proper bends. Replace any leaking cores. Install valve caps and tighten valve stem nuts, especially on new tubes. If installing or replacing tubes in radial tires, ensure radial designated tubes are used.

4.30 TIRE FLAPS.

Flaps should be of proper size and type for the tire. Check flaps for cracks, folds, tears, and cleanliness. Ensure radial designated tube protection flaps are used with radial tires.

IMPORTANT PROPER PROCEDURES FOR DEMOUNTING AND MOUNTING TUBELESS PASSENGER CAR TIRES

VIEW 1. RIM WITH NO HUMP AND WITH VALVE HOLE ON WEDGE LEDGE SIDE. MOUNT AND DEMOUNT WITH VALVE HOLE DOWN.

VIEW 2. RIM WITH HUMP ON EACH SIDE AND VALVE HOLE ON NARROW LEDGE SIDE. MOUNT AND DEMOUNT WITH VALVE HOLE UP.

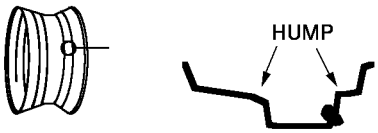

VIEW 3. RIM WITH HUMP AND VALVE HOLE ON NARROW LEDGE SIDE. SIMILAR RIMS WITHOUT HUMP ALSO IN USE. MOUNT AND DEMOUNT WITH VALVE HOLE UP.

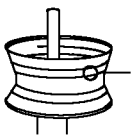

VIEW 4. PROPER POSITION OF RIM WITH NARROW LEDGE UP, VALVE ON NARROW LEDGE SIDE.

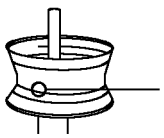

VIEW 5. PROPER POSITION OF RIM WITH NARROW LEDGE UP, VALVE ON WIDE WEDGE SIDE.

IMPORTANT: IN BOTH MOUNTING AND DEMOUNTING, ALWAYS START WITH THE NARROW BEAD.

PN-TO36-1-191-066

Figure 4-15. Effects of Rim Design on Proper Mounting Position

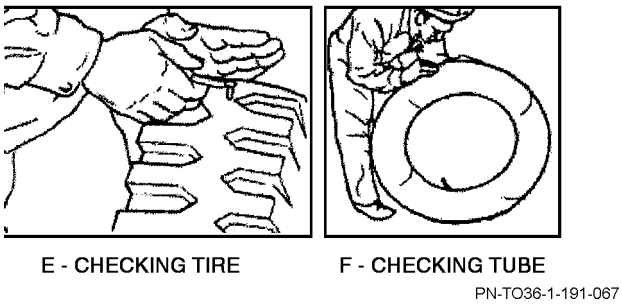

Figure 4-16. Points of Inspection for Tires and Tubes

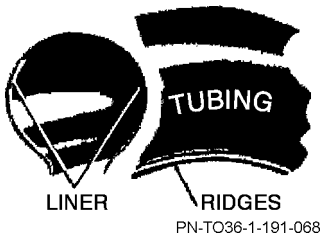

Figure 4-17. Tubeless Tire Construction

4.31 RIMS.

Check rims for cracks, dents dirt, and rust especially in the gutter (Figure 4-18). Be sure that rim lock ring is of proper size and type for the rim used and is not sprung or bent. Inspect wheels for worn or out-of-round stud holes and cracked disks. Side rings and locking rings are not interchangeable if they are of different manufacture. Wheel rims for tubeless tires must be free of rust, gummy rubber deposits, nicks, and gouges in the rim bead seat surface so as to provide an airtight seal with tire bead.

4.31.1 Rim and wheel maintenance during tire inspections.

4.31.1.1 Check all metal surfaces thoroughly while making tire inspections, including areas between duals and on inboard side of wheel. Watch for:

- Excessive rust or corrosion buildup cracks in metal.
- Bent flanges, resulting from road obstructions.
- Deep rim tool marks on rings or in gutter areas.
- Loose, missing or damaged nuts or clamps.
- Bent or stripped studs,
- Matched rim parts.

4.31.1.2 Dispose of damaged rims or wheels. Excessively corroded or cracked rims of rings can be dangerous. Deflate tires prior to the removal of rims or wheels from the vehicle.

4.31.1.2.1 Mark damaged or hazardous areas with chalk so that part will be removed from service.

4.31.1.2.2 Replace damaged parts. Ensure that replacements are made with proper sizes and types of rims and rings.

4.31.1.2.3 Inflate tires only to recommended air pressure.

4.31.2 Rim and wheel maintenance during tire changes.

4.31.2.1 Check all metal surfaces. A more thorough check may be made however, after the tire been demounted.

4.31.2.1.1 Cracks in the rim base, in the back flange and gutter areas are caused by deep rim tool marks, overloading, over inflating tires, and using larger than recommended tire sizes.

4.31.2.2 Cracks through side ring, spreading laterally through the entire section are caused by improper mounting and demounting techniques, impact with road obstructions and excessive clamping torques.

4.31.2.3 Cracks in the wheel disc, between stud holes or hand holes, are caused by loose wheel nuts, improper installation procedures and use of incorrect sizes/types of attaching parts.

4.31.2.4 Erosion and chipping of bead seat of lock ring, resulting from excessive corrosion may occur with this part, as well as others, if protective measures are not taken.

WARNING

Wire brush operations are hazardous to the eyes. Eye protection is required. Abrasive blasting operations involve airborne particles which may be hazardous to the body and eyes. A hood that will cover the head, neck, and shoulders, safety glasses, hearing protection, leather gloves with gauntlets and other personal protective equipment is required as mandated by local Bioenvironmental Engineer and Ground Safety Office.

4.31.3 Thoroughly remove rust, dirt and other foreign materials from all surfaces. Hand brushes, electric wire brushes or sand blasting may be used.

4.31.3.1 Gutters of rim bases should be cleared of rust and other materials obstructing safe, positive seating of rings.

4.31.3.2 Bead seat areas of rim should be free of rust and rubber deposits. This is especially important for drop center rims, because the bead seat is the air-sealing element.

4.31.3.3 Rings should be cleaned with wire brush. Pay particular attention to seating surfaces and bead particular seat areas.

WARNING

Metal Primer is toxic to skin, eyes, and respiratory tract. Avoid skin and eye contact. Good general ventilation adequate.

4.31.3.4 Paint rims by brush or spray with a fast-drying metal primer. Surfaces should be clean and dry prior to painting. Ensure that base metal areas on outside of tire side of rim are covered. This is especially important on drop center tubeless rims because warm and sometimes moist air is in constant contact with the metal surface on the tire side of the rim.

4.31.3.5 Lubricate tire side of rim base just prior to mounting tire. Avoid the use of any lubricant which contains water or solvent that is injurious to rubber. A combination lubricant and rust preventive compound is preferable. This protective measure is of particular importance with drop center tubeless rims as the air in the tire is contained by the tire side rim surface.

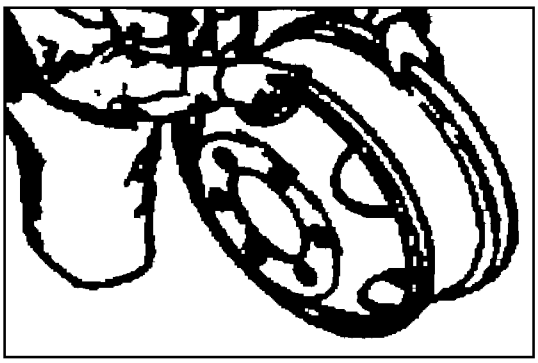

A - CHECKING RIM

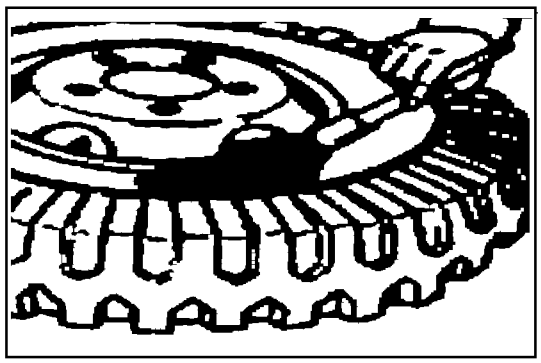

B - APPLYING SOAP SOLUTION

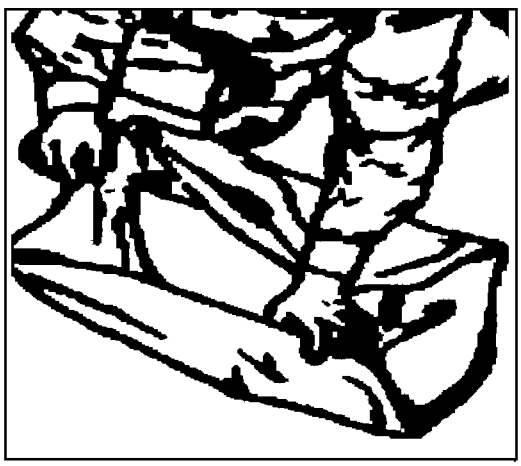

C - FOLDING LARGE SIZED TUBE

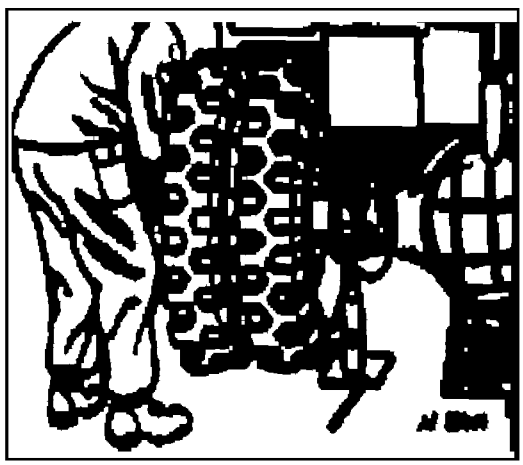

D - USE OF SAFETY BLOCKING

PN-TO36-1-191-069

Figure 4-18. Tire Mounting and Demounting Operation

4.32 PREPARATION.

4.32.1 Use lubricant solution on tire beads to make mounting and demounting easier, particularly when mounting and demounting tires on drop center or semi-drop center rims. Do not use oil or grease because petroleum products cause rapid deterioration of rubber. Do not use any lubricant which does not dry, for it may cause the bead to slip. Apply lubricant solution with a brush or swab, taking care not to allow excess solution to enter tire.

4.32.2 Large size tubes should be folded before insertion in tire.

4.32.2.1 Deflate the tube completely.

4.32.2.2 Install valve cap.

4.32.2.3 With tube in circular position, fold quarter of tube to left of valve inward.

4.32.2.4 Likewise fold two quarters opposite valve inward.

4.32.2.5 Insert pointed end with valve into tire; then insert other pointed end into tire and unfold tube into tire (see Figure 4-18).

4.32.3 When placing tubes in tires on wheels, be sure that:

4.32.3.1 Valves point in correct direction.

4.32.3.2 Valves that are offset in tubes are placed to match the offset valve hole in rim.

4.32.3.3 Angle valves are pointed toward the removable flanges of rim.

4.32.3.4 Be careful not to damage beads with tire tools or hammer. Bead wires are easily damaged if gouged with steel tools. If proper directions are followed, severe use of tools is not necessary. When difficulties are met, check methods.

4.32.3.5 Synthetic tubes and flaps require special care, and precautions must be observed in mounting to ensure maximum service. Before placing a small size tube in tire, the tube should be inflated to about three-quarters full or to point where it starts to round out. Large tubes should not be rounded out until after being placed in tires. Inspect tire and repair all damage. Lubricate entire surface of tube with tire lubricant.

4.32.3.6 Flaps must be dusted or lubricated on both sides (in addition to tube). Natural rubber flaps used with synthetic tubes need only be dusted or lubricated on side that comes in contact with tube.

4.32.3.7 After properly preparing the tube, tire, and rim, place tube in tire and mount in usual manner. Next, inflate sufficiently to force tire beads to seat properly against rim flange of drop-center and semi-drop center rims. Allow flaps to center properly between beads of flat-base rims and beadlocks; then deflate, in all cases, to relieve unnatural strain, free creases, or wrinkles. Finally, install valve core and again inflate to recommended operating pressures.

4.33 DETACHABLE RIMS.

To demount detachable rims on duals, remove the lug; then force off outer rims, the space band and inner rim. Reverse procedures in mounting. When mounting, be sure lugs fit in their proper place against the rim. Before lowering wheel to ground, rotate wheel and check to make sure assembly does not wobble.

4.34 DROP-CENTER RIMS.

This type of rim has a well in the center which permits mounting and demounting. Figure 4-19 and Figure 4-20 shows how the well in the rim makes these operations possible with lower part of bead in its seat. The upper part would have to be stretched or broken to free it, but with the lower part of the bead pushed into rim well, it is not necessary to stretch the upper part to slip it over the flange.

4.34.1 Tires may be removed from a drop-center rim (except from a safety-type rim) without removing the wheel, especially on small size tires. Considerable skill is required to mount and demount tires on this rim when wheel is on the vehicle. For this reason, the procedures in Figure 4-19 are used when the wheel is removed.

4.34.2 Demount tires as follows:

4.34.2.1 Determine which rim flange is nearer to the drop-center well and position short side upward.

4.34.2.2 Deflate tire by removing valve cap and valve core.

4.34.2.3 After tire has been completely deflated, install cap to prevent damage to threads of valve stem. Loosen beads from rim flanges (Figure 4-19).

WARNING

Do not dislodge tire beads, lock-rings, or split flange rings until absolutely certain that no air pressure remains in tire.

4.34.2.4 Insert two tire irons about 6 inches apart between upper bead and rim, near valve. Kneel on tire 180° from valve to force upper bead into well.

4.34.2.5 Pry outer bead over flange near valve.

4.34.2.6 Work irons progressively around tire bead, lifting tire bead over flange (Figure 4-19).

4.34.2.7 Remove tube from tire. Do not pull on valve.

4.34.2.8 Push inner bead into tube well on one side. Some passenger cars and light trucks use drop-center rims, known as safety rims (Figure 4-19). These have a hump in base of bead ledge to hold beads in place. Sets of manual type iron are used to force beads off bead seats. Wheel must be demounted before, removal of tires. After beads are forced off the seats, proceed as discussed to remove tire in same manner as above.

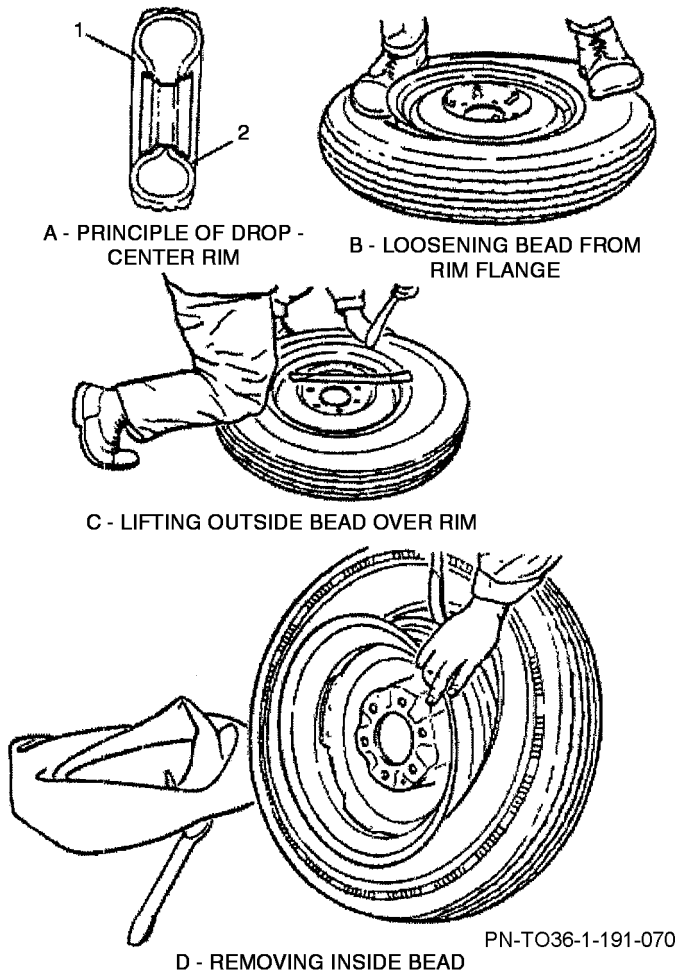

Figure 4-19. Manually Demounting Tire-Drop Center Rim

4.34.3 Mount tires as follows:

4.34.3.1 Inspect tire, tube, and rim. Remove valve cap. Inflate tube slightly and insert in tire, placing valve at balance mark. Lay wheel flat with valve hole up. Screw a valve fishing tool on the valve stem. Start to mount tire with valve pointing toward valve hole, pulling handle of fishing tool through valve hole in rim. Place inside bead in rim well near valve hole (Figure 4-20).

4.34.3.2 Holding inside bead in well, force remainder of inside bead over flange with a tire tool or rubber raced hammer. Spread tire and pull stem through hole in rim Figure 4-20.

4.34.3.3 Place outside bead in well, opposite valve and pry on rim with tire tool with rubber faced hammer, being careful not to damage beads on rim. Keep as much of bead as possible in rim well (Figure 4-20).

4.34.3.4 Check position of valve, shifting tire in order to center valve in hole with aid of fishing tool.

CAUTION

Pull very gently with fishing tool in order not to tear tube at base of valve.

4.34.3.5 Center tire around rim and inflate to about 10 psi. Apply air chuck to that part of fishing tool that serves as a valve stem extension. In this operation, valve stem maybe held by fishing tool. If bead fails to seat properly against rim flanges at this pressure, either the tube is pinched or part of bead is still in well, in which case, deflate and make appropriate corrections. Occasionally, beads will fail to seat in rim flange due to friction between beads and rim, especially if rim has not been sufficiently or properly lubricated with solution. This can be corrected by holding tire and rim (inflated 10 to 15 psi) upright and bouncing it on ground. If bead is properly seated, remove fishing tool, inflate to full pressure, then remove valve core and deflate tire to smooth out wrinkles in tube. Install valve core and again inflate to recommended pressure. Check valve for leaks and install valve cap. Beads of tires mounted on safety rims used on some passenger cars and light trucks snap over the bump into place after approximately 20 psi is applied. A snapping noise can be heard as beads snap into place. Inflate sufficiently to force beads against rim flanges, then deflate completely and again inflate to prescribed air pressure. Do not continue to inflate tire beyond 40 psi if beads are not in position. There is danger that beads may strike flange with enough force to break and jump the flange.

4.35 SERVICING MULTI-PIECE RIM WHEELS.

4.35.1 Scope. This paragraph applies to the servicing of vehicle wheels which tube-type tires mounted on multi-piece rims have defined below.

4.35.2 Definitions.

4.35.2.1 Charts the United States Department of Transportation, National Highway Traffic Safety Administration (NHTSA) publications entitled, “Safety Precautions for Mounting and Demounting Tube-type Truck/Bus Tires”, or any other publications containing, at a minimum, the same instructions, safety precautions and other information contained on those charts that are applicable to the types of multi-piece rim wheels being serviced.

4.35.2.2 Installing a Wheel the transfer and attachment of an assembled wheel onto a vehicle axle hub.

4.35.2.3 Removing - the opposite of installing.

4.35.2.4 Mounting a Tire - the assembly or putting together of rim components, tube, liner (flap) and tire to form a wheel including inflation.

4.35.2.5 Demounting - the opposite of mounting.

4.35.2.6 Multi-Piece Rim - a vehicle wheel rim consisting of two or more parts, one of which is a side or locking ring designed to hold the tire on the rim by interlocking components when the tube is inflated, regardless of the sizes of the component parts.

4.35.2.7 Restraining Device - a mechanical apparatus such as a safety cage, rack, or safety bar arrangement or other machinery or equipment specifically designed for this purpose, that will constrain all multi-piece rim wheel components following their release during an explosive separation of the wheel components. See Figure 4-22.

4.35.2.8 Rim Manual - a publication containing instructions from the manufacturer or other qualified organization for correct mounting, demounting, maintenance and safety precautions peculiar to the multi-piece rim being serviced.

4.35.2.9 Service or Servicing - the mounting and demounting of multi-piece rim wheels, activity such as inflating, deflating, installing, removing, maintaining, handling or storing of multi-piece rim wheels, including inflating and deflating of wheels installed on vehicles.

4.35.2.10 Service Area - that part of an employer’s premises used for the servicing of multi-piece rim wheels, or any other place where an employee services multi-piece rim wheels.

4.35.2.11 Trajectory - any potential path or route that a lock ring, side ring, rim base, and/or tire may travel during an explosive rim separation, and includes paths which may deviate from that perpendicular to the assembled position of the components on the rim base at the time of separation. (See Figure 4-21, Trajectory Warning, for examples).

4.35.2.12 Wheel and assemblage of tire, tube, and multi-piece rim components.

4.35.3 Employee Training.

4.35.3.1 The employer shall provide a training program to train and instruct all employees on hazards involved in servicing multi-piece rims and the safety procedures to be followed.

4.35.3.1.1 The employer shall ensure that no employee services a multi-piece rim wheel unless the employee has been trained and instructed on correct procedures of mounting, demounting, and all related services, activities, and correct safety precautions for the rim type being serviced, and the safe operating procedures described later in this chapter.

4.35.3.2 Information to be used in the training program shall include, at a minimum, data contained on the charts and contents of this technical order.

4.35.3.3 Where an employer knows or has reason to believe that any of his employees is unable to read and understand the charts of rim manual, the employer shall assure that the employee is instructed concerning the contents of the charts and rim manual in a manner which the employee is able to understand.

4.35.3.4 The employer shall assure that each employee demonstrates and maintains an ability to service multi-piece rims safely, including performance of the following tasks:

4.35.3.4.1 Demounting of tires (including deflation).

4.35.3.4.2 Inspection of wheel components.

4.35.3.4.3 Mounting of tires (including inflation within a restraining device).

4.35.3.4.4 Use of the restraining device.

4.35.3.4.5 Handling of wheels.

4.35.3.4.6 Inflation of tires when a wheel is mounted on the vehicles.

4.35.3.4.7 Installation and removal of wheels.

4.35.3.5 The employer shall evaluate each employee's ability to perform these tasks and to service multi-piece rim wheels safely and shall provide additional training as necessary to assure that each employee maintains proficiency.

4.35.4 Tire Servicing Equipment.

4.35.4.1 The employer shall furnish and shall assure that employees use a restraining device in servicing multi-piece rim wheels.

NOTE

When operating in a contingency situation where a restraining device is not available, chains may be used to restrain the lock ring. If a forklift is available, the forks should be used in conjunction with chains to secure the lock ring. Ensure that every precaution available has been taken to prevent injury to personnel.

4.35.4.2 Each restraining device shall have the capacity to withstand the maximum force that would be transferred to it during an explosive wheel separation occurring at 150 percent of maximum tire specification pressure for the wheels being serviced.

4.35.4.3 Restraining device shall be capable of preventing rim components from being thrown outside or beyond the frame of the device for any wheel position within the device.

4.35.4.4 Restraining devices shall be inspected prior to each day's use and after any explosive separation of wheel components and any restraining devices exhibiting any of the following defects shall be immediately removed from service:

4.35.4.4.1 Cracks at welds.

4.35.4.4.2 Cracked or broken components.

4.35.4.4.3 Bent or sprung components caused by mishandling, abuse or wheel separation.

4.35.4.4.4 Pitting of components due to excessive corrosion.

4.35.4.5 Restraining devices removed from service in accordance with Paragraph 4.35.4.4 shall not be returned to service until they are inspected, repaired, if necessary, and are certified either by the manufacturer or by a Registered Professional Engineer as meeting the strength requirements of Paragraph 4.35.4.2 and Paragraph 4.35.4.3.

4.35.5 A clip-on chuck with a sufficient length of hose to permit the employee to stand clear of the potential trajectory of the wheel components, in an in-line valve with gauge or a pressure regulator preset to a desired valve shall be furnished by the employer and used to inflate tires.

4.35.5.1 Current charts shall be available in the service area.

4.35.5.2 A current rim manual containing instructions for the type of rims being serviced shall be available in the service area.

4.35.5.3 The employer shall assure that only tools recommended in the rim manual for the type wheel being serviced are used to service multi-piece rim wheels.

4.35.6 Wheel Component Acceptability.

4.35.6.1 Wheel components shall not be interchanged except as provided in the charts, or in the applicable rim manual.

4.35.6.2 Wheel components shall be inspected prior to assembly. Rim bases, side rings or lock rings which are bent out of shape, pitted from corrosion, broken or cracked shall not be used and shall be rendered unusable or discarded.

4.35.6.3 Mating surfaces of the rim gutter, rings and tires shall be free of any dirt, surface rust, scale or rubber buildup prior to mounting and inflation.

4.35.7 Safe Operating Procedure. The employer shall establish a safe operating procedure for servicing multipiece rim wheels and shall assure that employees are instructed in and follow that procedure. The procedure shall include at least the following elements:

4.35.7.1 Tires shall be completely deflated by removing the valve core, before a wheel is removed from the axle in either of the following situations:

4.35.7.1.1 When the tire has been driven under inflated at 80 percent or less of its recommended pressure.

4.35.7.1.2 When there is obvious or suspected damage to the tire or wheel components.

4.35.7.2 Rubber lubricant shall be applied to bead and rim mating surfaces during assembly of the wheel and inflation of the tire.

4.35.7.3 Tires shall be inflated only when contained by a restraining device, except that when the wheel assembly is on a vehicle. Tires that are under-inflated but have more than 80 percent of the recommended pressure may be inflated while the wheel is on the vehicle if remote control inflation equipment is used and no employees are in the trajectory, and except as provided in Paragraph 4.35.7.5.

4.35.7.4 When a tire is being partially inflated without restraining device for the purpose of seating the lock ring or to round out the tube, such inflation shall not exceed 3 psi (0.21 kg/cm^2).

4.35.7.5 Whenever a tire is in a restraining device, the employee shall not rest or lean any part of his body or equipment on or against the restraining device.

4.35.7.6 After tire inflation, the tire, rim and rings shall be inspected while within the restraining device or make sure that they are properly seated and locked. If further adjustment to the tire, rim or rings is necessary, the tire shall be deflated by removal of the valve core before adjustment is made.

4.35.7.7 No attempt shall be made to correct the seating of side and lock rings by hammering, striking, or forcing the components while the tire is pressurized.

4.35.7.8 Cracked, broken bent or otherwise damaged rim components shall not be reworked, welded, braced, or otherwise heated.

4.35.7.9 Whenever multi-piece rim wheels are being handled, employees shall stay out of the trajectory unless the employer can demonstrate that performance of the servicing makes the employee's presence in the trajectory necessary.

4.35.8 Ordering Information. The National Highway Traffic Safety Administration has prepared safety information charts as part of a continuing campaign to alert truck and bus service personnel to the risk involved when working with multi-piece truck and bus wheels. Individuals who service such wheels may obtain a copy of each chart, without cost, by writing to General Services Division/Distribution, National Highway Traffic Safety Administration, 400 Seventh Street SW, Washington, DC 20590.

4.35.8.1 Reprints of the above mentioned charts are available through the Occupational Safety and Health Administration (OSHA) area offices. The address and telephone number of the nearest OSHA area office can be obtained by looking in the local telephone directory under U.S. Government, U.S. Department of Labor, Occupational Safety and Health Administrative. Single copies are available without charge.

4.35.8.2 Available from Rubber Manufacturers Association are numerous demounting and mounting procedure charts for all special and general purpose vehicles. Also available are booklets on safety and servicing and multi-piece rim wheels, and a training for a minor fee. Write for the catalog from: Rubber Manufacturers Association, 1901 Pennsylvania Ave., NW, Washington, DC 20060.

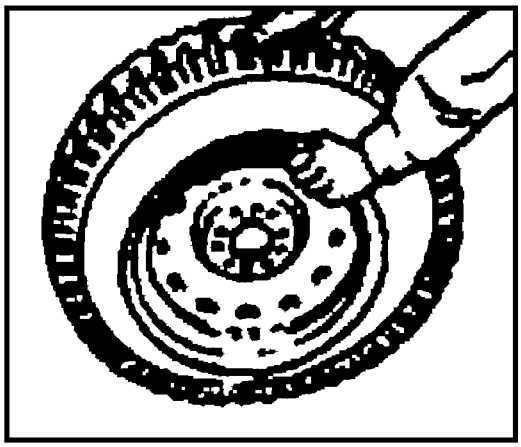

A - PLACING INSIDE BEAD IN WELL

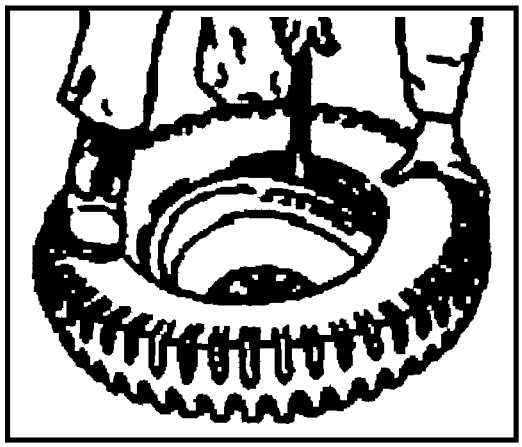

B - LIFTING INSIDE BEAD OVER RIM

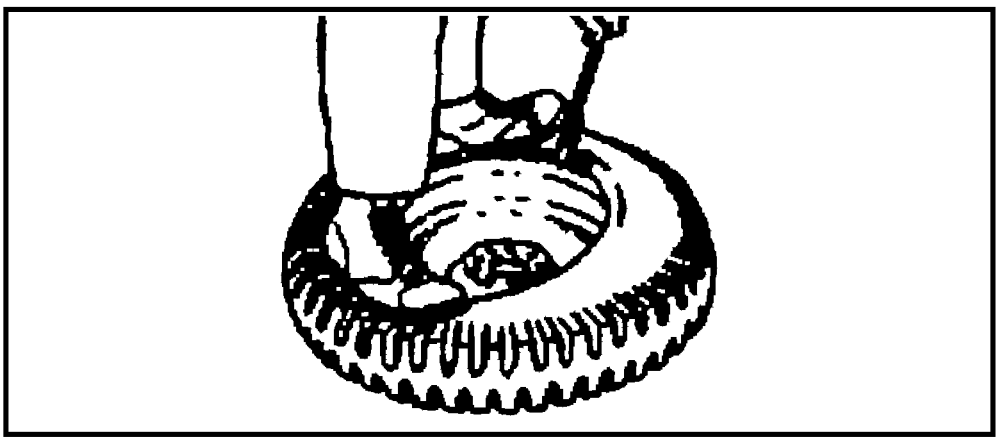

C - PLACING OUTSIDE BEAD IN WELL

PN -TO36-1-191-071

Figure 4-20. Manually Mounting Tire-Drop Center Rim

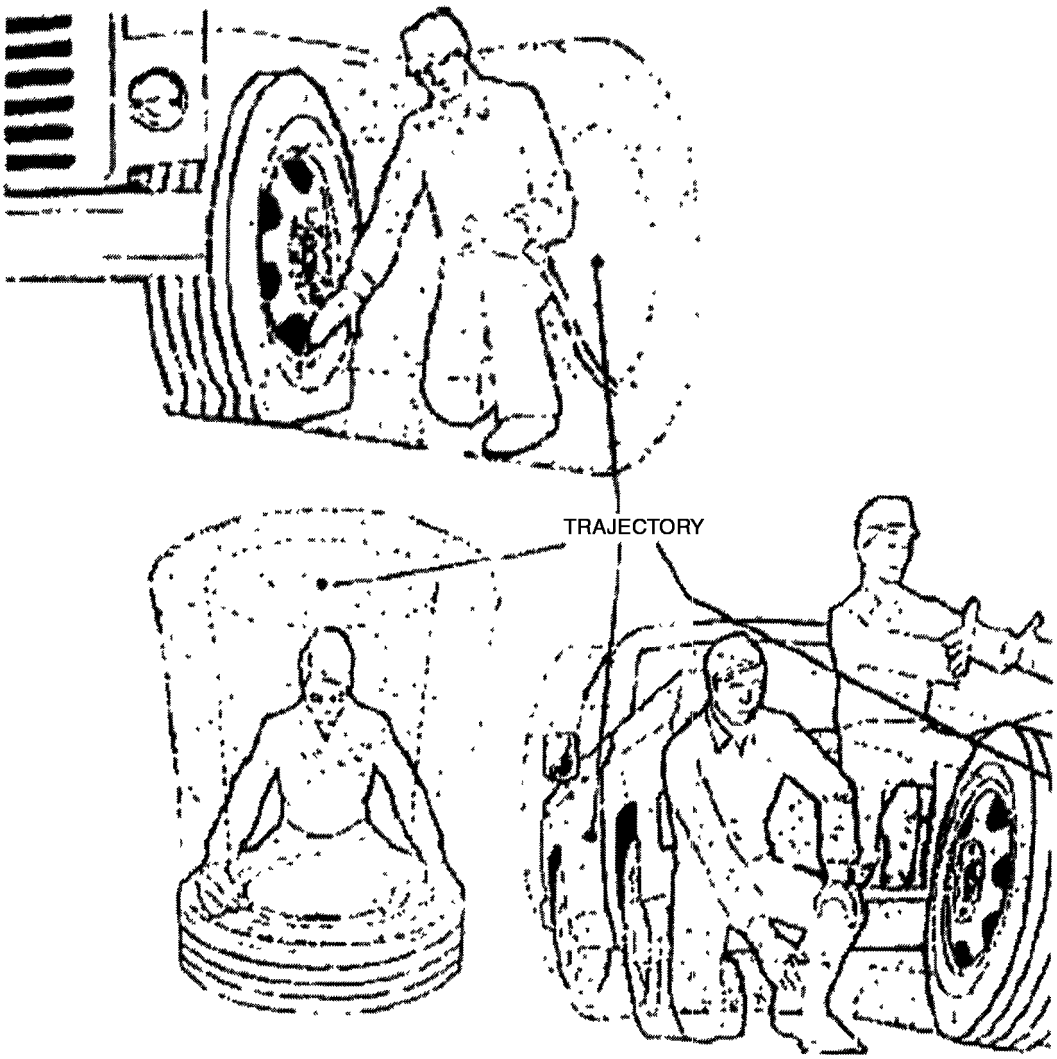

TRAJECTORY

WARNING

STAY OUT OF TRAJECTORY AREA AS INDICATED BY HIGHLIGHTED MARKINGS.

NOTE

UNDER SOME CIRCUMSTANCES THE TRAJECTORY MAY BE DIFFERENT THAN EXPECTED.

PN-TO36-1-191-072

Figure 4-21. Trajectory Warning

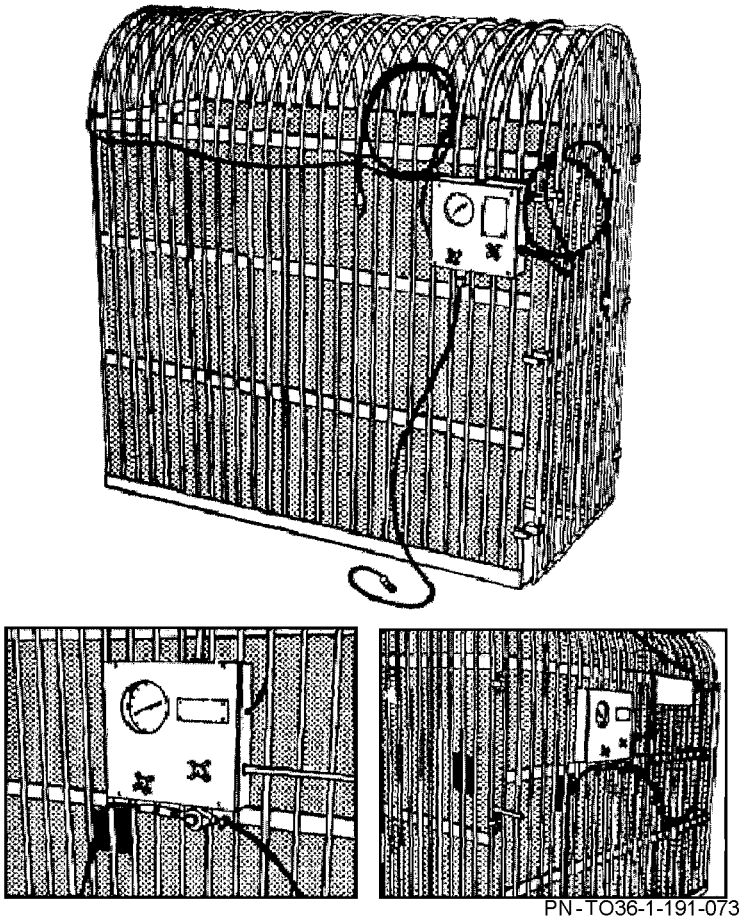

Figure 4-22. Tire Inflator Cage with Proper Inflation Equipment Shown.

Record of Tire Pressure Gauge Testing

NSN of Gauge Tested	Date Tested	PSI Variance With Master Gauge	Date Master Gauge Calibrated	Tester

AF IMT 3126, 20060215, V1 GENERAL PURPOSE (8 1/2 x 11")

PN-TO36-1-191-074

Figure 4-23. Pressure Gauge Test Record

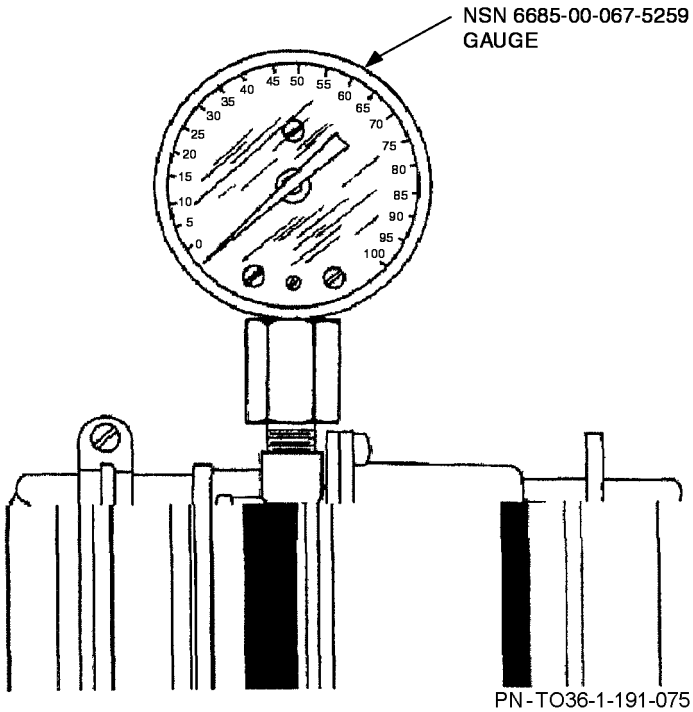

Figure 4-24. Pressure Gauge Test Assembly

4.36 USE OF STUDS IN TIRES.

Tire studs may be used when state laws permit and when their use is required to maintain operational capability on ice and snow. Their use shall be determined jointly by the vehicle operations and VFMs with the coordination of FOD/safety officers and civil engineering where applicable. The following instructions apply:

4.36.1 Studs should be applied to all drive wheels.

4.36.2 Studs are not recommended for military mud and snow tread.

4.36.3 When installing studs, consider the cost involved in removing such tires and storing them during summer months. Studded tires will not be used during summer months.

4.36.4 Casings will not be submitted for retreading if studs are or have previously been installed.

4.36.5 Do not stud used pre-drilled tires. Experience has shown that small rocks become embedded in the holes and the stud may push the rock through the casing.

4.36.6 Studded tires will not be run on the chassis dynamometer, as the studs will severely damage the rollers.

CAUTION

The pre-mold designed tire treads are best suited for studding. However, any tire is suitable if it meets the tolerances provided in the stud installation instruction data. This data with the necessary tools is furnished in a kit. The required studs will be local purchased as needed.

4.37 TIRE INFLATION.

Tire inflator cage NSN 4910-01-333-3504, part No. SP88 is authorized and certified by the AF Safety Office and should be used for inflating vehicle tires (Figure 4-22). Tire cages carrying any of the following NSNs are not bolted to the floor, to allow the cage to flex properly during a tire/wheel explosion. Cages from other manufacturers and carrying other NSNs than those listed here will be bolted to the floor if specified by the manufacturer. If in doubt, consult the manufacturer:

4910-00-025-0623 Air Force drawing part No. 64E330077

4910-01-034-6188 Wright Tool Co and Hennessey Ind.

4910-01-333-3504 AHCON Industries

4910-01-421-0985 Air Force Spec (A-A-58048C).

4.37.1 Regulator. The tire inflator cage is equipped with an automated electronic inflation control. Air pressure requirements are preset allowing the operator to pursue other task while the tire is being filled. When using tire cage, NSN 4910-00-025-0623, (part No. 64E33077), a regulator gauge (calibrated through PMEL), shut-off valve, service hose and lock-on type chuck will be used to control the air when inflating. Also a bleed valve will be used to relieve pressure in hose when tire is filled.

4.37.2 Pressure Gauges. Tire pressure gauges will be checked quarterly with a precision type gauge for accuracy. When testing these gauges, if they are found to be inaccurate in excess of plus or minus 2 psi, they will be replaced. Materiel control will remove the gauge from service and obtain a replacement as soon as possible. AF Form 3126 or equivalent with identical heading as per Figure 4-23 will be annotated each time the gauges are checked.

4.37.2.1 Test Apparatus. Items used to assemble test apparatus are as follows:

4.37.2.2 Bourdon type gauge, 125 psi, 0.250 of one percent accuracy, calibrated in one-half pound increments, will be used as a master gauge.

4.37.2.3 Air pressure regulator, necessary ties, reducers, valve core stems, and nipples are required for assembly. Complete assembly is shown in Figure 4-24.

4.38 VEHICLES EQUIPPED WITH DISC BRAKES.

Correct wheel mounting and bolt tightening procedures are critical on vehicles equipped with disc brakes. The bolts must be tightened in an opposite pattern and to the proper torque values. To minimize possible rotor damage, do not use an impact wrench.

4.39 STORAGE OF TIRES.

Tires on vehicles being processed for level A storage will be prepared in accordance with Chapter 8 of this TO.

4.40 USE OF FOREIGN OBJECT DAMAGE (FOD) TIRES.

Routine use of FOD tires has been discontinued. Results of an Air Force Maintenance Evaluation Program project and all major command survey concluded that the use of FOD tires is not justifiable.

4.40.1 Necessity. Reported needs for FOD tires should be critically reviewed on a case-by-case basis. Future use of FOD tires will be predicated on factual data compiled and validated by the base FOD control officer. Validation will affirm that such a program is necessary to eliminate potential aircraft engine or aircraft tire damage.

4.40.2 Acquisition. When the base FOD control officer determines that a special tire tread design is necessary for specific vehicles, a tire will be selected from available sources which offers the most protection from FOD. This will normally be a diamond or cross bar type tread or any tread without narrow groves or ribs. The selected tire will be approved by the responsible VFM to ensure that the vehicle's design or operational capability is not reduced. When the need is validated, conventional tires may also be retreaded with military tread to support FOD tire requirements, providing the required service is available for the size needed.

4.41 SOLID AND SEMI-PNEUMATIC TIRES.

Solid and semi-pneumatic tires will be used only on slow moving, industrial type materials handling equipment. Solid or semi-pneumatic tires provide much less cushioning than pneumatic tires, but are used where required loading is far beyond the capacity of comparable sized pneumatic tires.

4.42 TYPE OF TIRES.

4.42.1 Standard Solid Rubber Tires. Standard solid rubber tires have a relatively thin and hard section. This type of tire has greater load capacity than a comparative sized cushion-type. Rolling resistance and cushioning of this conventional type is less than the cushion rubber tire.

4.42.2 Cushion Rubber Tires. The cushion rubber tire has a relatively thick and soft section. This type tire offers greater cushioning and rolling resistance than a comparative sized conventional solid rubber tire. Required replacements will be selected from Federal Supply Catalog (2630/40IL).

4.43 TYPE OF MOUNTINGS.

4.43.1 Press On. Press on type tire is bonded to a steel band and the complete unit is pressed on to the outside rim of the wheel. When the tire requires replacement, the band is pressed off and a new one pressed on.

4.43.2 Bolt On. Bolt on type tire is bonded to a flanged rim provided with holes for bolting to a drive flange.

4.43.3 Integral Type. Integral type tire is bonded directly to the metal wheel. When the tire requires replacement, a new tire may be cured on, provided the wheel is not deformed, cracked, or chipped beyond repair.

4.43.4 Solid Lug Base Type. Solid lug base type tire is used for light and medium loads. When loaded near rated capacity, it provides cushioning nearly equal to pneumatic tires. The tire is constructed of resilient rubber on base lugs which prevent creeping on the wheels. The wheels are of two piece construction for mounting and demounting.

4.43.5 Semi-Pneumatic Lug Base Type. Semi-pneumatic lug base type tire is similar to the solid lug base except for a hollow center without tube or valve. Its carrying capacity is lower, but it has better cushioning characteristics than, the solid lug base type.

4.44 TREAD PATTERNS.

4.44.1 Smooth Tread. Smooth tread is used for general shop and warehouse vehicles that require maximum surface contact to support maximum unit loading.

4.44.2 Grooved Tread. Grooved tread is used for large vehicles with extra heavy loads. The tread has good heat dissipation qualities.

4.44.3 Diamond Tread. Diamond tread provides good traction on ramps and wet surfaces. It combines good skid reducing characteristics and maximum heat dissipation qualities with minimum wear under heavy load and low speed conditions.

4.44.4 Rib Tread. Rib tread provides for maximum steady pull in either direction and is especially adapted to snow, slippery roads, sand and other extreme surface conditions.

4.45 PREVENTIVE MAINTENANCE.

Vehicle management responsibilities are as follows:

4.45.1 Proper wheel bearing adjustment and lubrication will reduce drag, thus reducing tire wear. Lubricate wheel bearings in accordance with pertinent technical manual or Chapter 3.

NOTE

Do not over lubricate either wheel bearings or chassis since grease and oil will work out and deteriorate rubber.

4.45.2 Improper steering linkage adjustment or axle alignment results in fast, irregular tread wear, flange wear, and chewed rubber. At the first sign of irregular wear, check for mechanical faults and correct according to the pertinent technical manual.

4.46 INSPECTION.

Vehicle management responsibilities performed during scheduled inspections/servicing are as follows:

4.46.1 Inspect tires for uneven wear and separation.

4.46.2 Check for oil or grease leaks that could or have contaminated the rubber tires.

4.46.3 Check tires for wear and replace when necessary.

4.46.4 Inspect tires for tread cracks, base separation, and slippage of rim on wheel.

4.46.5 Check solid and semi-pneumatic lug base type tires for looseness or slipping on wheel.

4.46.6 Solid rubber tires should be replaced on vehicles using the same tread on drive wheels.

NOTE

Solid rubber type tires and track components, not covered in this technical order will be repaired/replaced as prescribed by the technical order pertaining to applicable equipment.

4.47 GENERAL.

The following guidelines will be used for removal of pneumatic tires from a vehicle being processed for disposal. (Solid rubber and semi-pneumatic tires will not be removed from vehicles being processed for disposal).

4.47.1 The determination as to whether tires will be removed is a responsibility of vehicle management in coordination with Distribution Flight and DRMS. Distribution Flight involvement is only necessary if they stock, issue, and manage vehicle tires. Many Distribution Flights have divested themselves of this function.

4.47.2 Whenever possible, any tire that is removed will be replaced with an unserviceable but inflatable tire.

4.47.3 Vehicles, except those which have been wrecked, will have tires installed when turned in for disposal. If a tire is removed and not replaced, an appropriate entry will be made in block 122 of the AFTO Form 91. If the tire and wheel are removed as a unit, a like size replacement wheel will be installed on the vehicle.

4.47.4 When serviceable tires are not removed due to absence of the situations listed in Paragraph 4.49, an appropriate explanation will be made in block 122 of AFTO Form 91.

4.48 CRITERIA FOR REMOVAL OF TIRES.

At least one of the following situations must prevail before serviceable tires are removed from a vehicle.

4.48.1 The stock of like size tires in the supply point of the vehicle management activity is below established operating level and/or the stock in Distribution Flight is below retention level and there are no tires due in to fulfill this requirement.

4.48.2 Vehicles in the local fleet are equipped with like size tires that will soon need to be replaced.

4.48.3 Distribution Flight has unfilled requisitions for like size tires.

4.49 TIRES CONSIDERED UNSERVICEABLE ON EQUIPMENT BEING PROCESSED FOR DISPOSAL.

A tire having any one of the conditions listed below, as detected by visual inspection, will not be removed from a vehicle being processed for disposal.

4.49.1 Less than one-half the original or retreaded tread remaining (applicable up to and including 16-inch size tires).

4.49.2 Less than one-quarter of the original or retreaded tread remaining (applicable to tires above the 16-inch size tire).

4.49.3 Less than 1/16 inch of the original or retreaded tread remaining (applicable to special and high cost tires).

4.49.4 A break or cut in the tread or sidewalls.

4.49.5 A bump, bulge, or knot caused by separation or failure of tire structure.

4.49.6 Circumferential cracks within the tread.

4.49.7 Radial cracks.

4.49.8 Damaged by excessive heat.

4.49.9 Evidence of separation between tire carcass and retreaded tread.

4.49.10 Not suitable for retreading.

4.49.11 Sectional repaired.

4.49.12 Tread and side walls deteriorated with the tire structure hard and brittle.

4.49.13 Evidence of other conditions prevailing which, through the determination of the VFMs, make the tires unsuitable for use.

4.50 CONTROL OF TIRES.

Issue, turn-in, and control of tires sourced through SBSS will be accomplished in accordance with DIFM control procedures. Tires codes XF are subject to repair cycle asset control. The DIFM control system is basically a positive system which requires a return of a tire (same size, serviceable or unserviceable) for every tire issued.

NOTE

Excess tires will not be turned in to FB 2065 or FD 2060 account. If inspection reveals that cost and/or condition of tire(s) are such that further use is anticipated they will be reported to Army Tank Automotive Command DRSTAFOGA (source AKZ) for disposition instructions.

4.51 SUPPLY POINT.

In order to provide a stock of tires, a supply point normally will be established by Distribution Flight in, or adjacent to the tire shop. It is usually a 15 day operating stock. At large installations, the supply point may be manned by LRS distribution personnel. A portion of the operating stock may be built-up wheel/tire assemblies as determined by experience, need, and availability of wheels. Built-up assemblies should be stored in tire shop under custody of shop supervisor with the supply point retaining accountability until installed.

4.52 RESPONSIBILITIES.

The VFM will:

4.52.1 Provide space within the vehicle management activity for the storage of tires.

4.52.2 In coordination with LRS Distribution officer, establish and adjust the operating and/or supply point levels for tires.

4.52.3 Ensure that excesses are returned to LRS/LGRD.

4.52.4 Review with Distribution Flight the repair cycle time (item required for repair and return) for tires and adjust levels accordingly.

4.52.5 Furnish status of tires under custody of the maintenance activity, when required by the Distribution Flight.

4.52.6 In coordination with the LRS Distribution officer, develop instructions to cover exact issue and turn-in procedures and other operating procedures for effective management of tires. The Distribution Flight officer is responsible for the maintenance (including delivery to) control and record keeping associated with the supply point operation. Management of the supply point is the responsibility of the Distribution Flight.

4.53 TURN-IN PROCEDURES FOR UNSERVICEABLE TIRES.

Unserviceable tires (repairable or condemned) regardless of source will be turned in to the Distribution Flight.

4.54 PROCEDURES FOR REPAIRABLE/RETREADABLE TIRES.

When sufficient quantities of retreadable tires have been accumulated, vehicle management personnel will process a DIFM status update form coded CTR to the Distribution Flight (reference AFMAN 23-110). This status request will result in a notice from the Distribution Flight to either repair or transfer to disposal. As a result, vehicle management personnel will process the tires for retreading or turn in to the Distribution Flight repair unit.

4.54.1 Before processing tires to contract maintenance for retreading, vehicle management personnel will determine the types of tread and the size of tires that local contractors can process for retreading. If the original tread is available, a determination must be made whether a requirement exists to have these tires retreaded with a different tread.

4.54.2 To process retreadable tires to contract maintenance, supply point personnel will prepare AF Form 9, Request for Purchase. The organization code of the vehicle management activity will be entered on the AF Form 9.

4.54.3 One signed copy of the form will be returned to vehicle management and then forwarded to the LRS Distribution flight to be filed in the suspense file and to aid in reconciling the DIFM listing.

4.54.4 Upon return of retreaded tires from contract maintenance, they will be turned into the Distribution Flight utilizing DIFM turn-in documents.

4.55 SEASONAL TIRE STOCKS.

Seasonal tires may be used when required. Seasonal tires will be maintained in the supply point during the winter season and turned in to the Distribution Flight for storage until required for next season's use. An excess exception code on the basic item record in the Distribution Flight will be used to retain these tires for seasonal use. This procedure also applies to conventional tires replaced with seasonal tires. Codes to be used to control these tires will be determined by the Distribution Flight. Non-studded seasonal (mud and snow) tires for other than passenger vehicles will normally be kept on the vehicle year round. The VFM should review the Distribution Flight stocks of seasonal tires 90 days prior to the use period to determine if stocks and levels are adequate.

4.56 STORAGE OF TIRES.

Tires in storage will deteriorate from elements such as light, heat, oil, dust, dirt, smoke, and water. Air in motion acts as the carrier and the catalyst, Protection against these factors must be considered when storing pneumatic tires. Maintenance of tires on vehicles in storage is outlined in Chapter 8.

4.57 TIRE COSTING.

Tire costing within the base vehicle management activity will be in accordance with AFI 23-302.

4.58 TIRE WARRANTIES.

Tire warranties (new and retreaded) are based on tread wear. Warranties will be used when economical; i.e., when value gained exceeds the cost of using the warranty to include handling and transportation.

4.59 INVENTORY CONTROL.

On an "as required" basis, the Distribution Flight will produce a supply point listing which reflects authorized quantities and on-hand assets.

4.59.1 The DIFM listing depicts those tires on hand in the tire shop awaiting turn-in or repair and the tires that have been processed for repair (retread).

4.59.2 DIFM reports can be used to reconcile inventories. Using these products on a frequent basis should eliminate the need for maintenance of an inventory record. When these reports are used for inventory control, inventory reconciliation must be accomplished at least monthly.

4.59.3 Custodial control of tires within the tire shop is the responsibility of shop supervisor. The Distribution Flight has primary responsibility and accountability for tires in the supply point until issued. Commands may direct that tire inventory be controlled by individual transaction if detailed control is essential. Normally, this requirement will arise where security is a documented problem or difficulties are being experienced in reconciling the reports with the inventory. If individual transaction control is necessary the tire inventory control record, AFTO Form 70, Figure 4-25, reproduced locally, will be used.

4.59.4 AFTO Form 70, Tire Inventory Control Record (Figure 4-25). Optional. This form will contain the following entries:

4.59.4.1 Column A, DATE. Enter the day and month.

4.59.4.2 Column B, RECEIVED. Enter the quantity of tires received from The Distribution Flight, maintenance, removed from equipment, retreadable/reparable, and condemnation.

4.59.4.3 Column C, ISSUED. Enter the quantity issued for installation on a vehicle or to the vehicle management activity.

4.59.4.4 Column D, TURN IN. Enter the quantity turned-in to the Distribution Flight as excess, retreading, or processing to DRMS.

4.59.4.5 Column E, BALANCE. Enter the balance after adding the quantity received to the previous balance and deducting the quantities issued and turned-in to the Distribution Flight.

4.59.4.6 Column F, BACK ORDER. Enter the total quantity on back order.

4.59.4.7 Column G, ACTION BY. The person making the tire transaction will enter his last name in this column.

4.59.4.8 Block 1, STOCK NUMBER. Enter the stock number.

4.59.4.9 Block 2, SIZE/TYPE/PLY. Enter the tire size, type, ply rating and tread design.

4.59.4.10 Block 3, COST. Enter the cost of tire.

4.59.4.11 Block 4, LEVEL. Enter the authorized 15 day operating stock level as determined by the VFM in coordination with the LRS distribution flight officer. List the applicable vehicles on the back of this form.

4.60 THE TIRE AND RIM ASSOCIATION YEARBOOK.

The Tire and Rim Association Yearbook may be purchased to supplement this chapter. This yearbook is updated as needed by the Tire and Rim Association. This yearbook gives technical specification based on engineering principles and approved practices. Information in this yearbook covers tire sizes and load ranges for all vehicles, rim specifications, tire pressure, and valve stem criteria. The Tire and Rim Association Yearbook can be ordered from 175 Montrose West Ave., Suite 150, Copley, Ohio 44313 or www.us-tra.org/traAbout.htm (see publications).

4.61 CONVERSION TABLES.

Table 4-3 through Table 4-5 contain tire size conversion charts.

NOTE

Refer to manufacturer's specification listed in MOD, the vehicle TO, or the owners manual for wheel nut torque values.

TIRE INVENTORY CONTROL RECORD

DATE	RECEIVED	ISSUED	TURN-IN	BALANCE	BACK ORDER	ACTION BY
A	B	C	D	E	F	G

Table 4-3. Tire Size Conversion Chart

78 Series	Acceptable Substitute	70 Series	Acceptable Substitute	60 Series	Acceptable Substitute
AR78-13	P165/80R13, P175/75R13	AR70-13	P185/70R13, 185/70R13	AR60-13	P195/60R13, P215/50R13
BR78-13	P175/80R13, P185/75R13	BR70-13	P195/70R13	BR60-13	P205/60R13
CR78-13	P185/80R13	CR70-13	P195/70R13, P205/70R13	CR60-13	P215/60R13, P235/50R13
BR78-14	P175/75R14	BR70-14	P185/70R14, 185/70R14	DR60-14	P215/60R14
CR78-14	P185/75R14	CR70-14	P195/70R14, 195/70R14	ER60-14	P235/60R14, P245/50R14
DR78-14	P195/75R14	DR70-14	P205/70R14	GR60-14	P245/60R14, P265/50R14
ER78-14	P195/75R14	ER70-14	P205/70R14	GR60-15	P245/60R15, P265/50R15
FR78-14	P205/75R14	FR70-14	P215/70R14	HR60-15	P255/60R15, P275/50R15
GR78-14	P215/75R14	GR70-14	P225/70R14	LR60-15	P275/60R15, P295/50R15
HR78-14	P225/75R14	HR70-14	P235/75R14		
BR78-15	P165/80R15, P175/75R15	BR70-15	P165/80R15, P175/70R15		
ER78-15	P195/75R15	ER70-15	P195/75R15		
FR78-15	P205/75R15	FR70-15	P215/70R15		
GR78-15	P215/75R15	GR70-15	P225/70R15		
HR78-15	P225/75R15	HR70-15	P235/70R15		
JR78-15	P225/75RI5	JR70-15	P225/75R15, P235/70R15		
LR78-15	P235/75R15	LR70-15	P245/70R15, P255/70R15		

NOTE

Since interchange ability is not always possible for equivalent tires due to differences in load ranges, tire dimensions, fender clearances, and rim sizes, manufacturer's recommendations should be checked. Due to different handling characteristics, radial ply tires should not be mixed with bias ply tires on the same vehicle. In the case of "60 and 70 Series" tires, mixing with conventional tires is permitted but only if used in pairs on the same axle.

Table 4-4. Tire Size Conversion Chart (European Metric Tire Size)

	If Vehicle Tire Placard Specifies A European Metric Tire Size
Metric Sz	Acceptable Substitute Size
155R13	P155/80R13, P165/75R13, P175/70R13, 175/70R13
165R13	P165/80R13, P175/75R13, P185/70R13, P195/60R13, P215/50R13, 185/70R13
175R13	P175/80R13, P185/75R13, P195/70R13, P205/60R13
185R13	P185/80R13, P205/70R13, P215/60R13, P235/50R13
175/70R13	P165/80R13, P175/75R13, P175/70R13, P195/60R13, P215/50R13
185/70R13	P175/80R13, P185/75R13, P185/70R13
165R14	P165/80R14, P175/75R14, P185/70R14, 185/70R14
175R14	P185/75R14, P195/70R14, P215/60R14, 195/70R14
185R14	P195/75R14, P205/70R14, P245/50R14
185/70R14	P185/75R14, P185/70R14
195/70R14	P195/75R14, P195/70R14, P215/60R14
155R15	P155/80R15, P165/75R15
165R15	P165/80RI5, P175/75R15
175R15	P185/75R15

Table 4-5. Tire Size Conversion Charts

	If Vehicle Tire Placard Specifies A European Metric Tire Size
P-Metric Sz	Acceptable Substitute Size
P155/80R13	P165/75R13, P175/70R13, P175/70R13
P165/80R13	P175/75R13, P185/70R13, P195/60R13, P215/50R13, AR78-13, AR70-13, 185/70R13
P185/80R13	P185/75R13, P195/70R13, P215/60R13, P235/50R13, CR78-13, CR70-13
P165/75R13	P165/80R13, P175/70R13, P195/60R13, P215/50R13, AR78-13, AR70-13, 175/70R13
P175/75R13	P175/80R13, P185/70R13, P205/60R13, BR78-13, BR70-13, 185/70R13
P185/75R13	P185/80R13, P195/70R13, P215/60R13, P235/50R13, CR70-13, CR78-13
P175/70R13	P165/80R13, P175/75R13, P195/60R13, P215/50R13, AR78-13, AR70-13
P185/70R13	P175/80R13, P185/75R13, P205/60R13, BR78-13, BR70-13, 185/70R13
P195/70R13	P185/80R13, P215/60R13, CR78-13, CR70-13
P205/70R13	NONE
P165/80R14	P175/75R14, BR78-14, 185/70R14
P175/75R14	P185/70R14, CR78-14
P185/75R14	P195/70R14, P215/60R14, DR78-14, DR70-14, 195/70R14
P195/75R14	P215/70R14, P225/60R14, P245/50R14, ER78-14, ER70-14
P205/75R14	P215/70R14, P235/60R14, P265/50R14, GR78-14, GR70-14
P205/75R14	FR78-14(LOAD RANGE D), FR70-14(LOAD RANGE D)
P255/75R14	P225/70R14, P245/60R14, HR78-14, HR70-14
P185/70R14	P185/75R14, CR78-14, CR70-14
P195/70R14	P195/75R14, P215/60R14, DR78-14, DR70-14
P205/70R14	P205/75R14, P225/60R14, P245/50R14, FR78-14, FR70-14
P215/70R14	P215/75R14, P265/50R14, P235/60R14, GR78-14, GR70-14
P225/70R14	P225/75R14, P245/60R14, HR78-14, HR70-14
P235/70R14	JR78-14, JR70-14
P245/70R14	NONE
P155/80R15	P165/75R15

Table 4-5. Tire Size Conversion Charts - Continued

	If Vehicle Tire Placard Specifies A European Metric Tire Size
P165/80R15	P175/75R15, CR 78-15
P195/80R15	P205/75R15, P215/70R15, GR78-15, GR70-15
P165/75R15	P165/80R15, BR78-15
P175/75R15	CR78-15
P195/75R15	FR78-15, FR70-15, P195/80R15
P205/75R15	P215/70R15, P235/60R15, P265/50R15, GR78-15, GR70-15
P215/75R15	P225/70R15, P245/60R15, P275/50R15, HR78-15, HR70-15
P225/75R15	JR78-15, P235/70R15, P255/60R15
P235/75R15	P245/70R15, P275/60R15, P295/50R15
P215/70R15	P215/75R15, P235/60R15, P265/50R15, GR78-15, GR70-15
P225/70R15	P225/75R15, P245/60R15, P275/50R15, HR78-15, HR70-15
P235/70R15	P235/75R15, LR78-15
P245/70R15	P275/60R15, P295/50R15
P255/70R15	P305/50R15

CHAPTER 5
REPAIR ALLOWANCES AND REPLACEMENT CODES

5.1 PURPOSE.

Set up procedures for making vehicle repair decisions, writing repair estimates, assigning replacement codes and preparing the annual vehicle buy lists. The intent is to develop an orderly vehicle repair and replacement program, avoiding costly repairs when it would be cheaper to replace the vehicle or lease commercial equipment.

5.2 GENERAL.

Repair policy and replacement programming procedures of this manual were developed from guidance contained in AFI 23-302 Vehicle Management.

5.3 SCOPE.

Applies to all USAF and Air National Guard activities that operate and/or maintain USAF vehicles. The term "vehicle," as used in this manual, refers to any equipment assigned a vehicle registration number as required by AFI 23-302. This includes motor vehicle chassis used as components of other end items and vehicular equipment managed as Support Equipment (SE). All provisions of this chapter apply for AFEMS-reportable vehicles listed in the VMIF, at https://sevpgm.robins.af.mil/vehicle/vmif/section2.asp. If the equipment is not AFEMS reportable, do not use this manual for making repair decisions, and do not include such equipment in the Vehicle Buy Program. Contact the equipment item manager if in doubt.

5.4 RESPONSIBILITIES.

Vehicle Fleet Managers will set up local procedures to ensure that this manual, except for the Vehicle Buy Program, is complied with. Vehicle Management & Analysis, Registered Equipment Management System (REMS), Vehicle Operations, RED HORSE Squadrons, and tenant organizations participate in the Vehicle Buy Program as directed by the parent MAJCOM.

5.5 REMS/OLVIMS INTERFACE.

There will be a monthly exchange of selected information between the On-Line Vehicle Interactive Management System (OLVIMS) and the Registered Equipment Management System (REMS) at base level. Each month the Standard Base Supply System will prepare a record for each vehicle in the REMS file. These records are then input into OLVIMS and checked against the OLVIMS vehicle master file. This interface will point out inventory errors in both systems and will automatically exchange selected data. OLVIMS will prepare an FCI record for each replacement code change. The records will be melded with REMS for input into the Standard Base Supply System which will update the REMS file.

5.6 EXCEPTIONS.

Separate procedures govern Air Education and Training Command training vehicles, vehicles withdrawn from disposal, obsolete vehicles, and special mounted equipment.

5.6.1 Air Education and Training Command (AETC) training vehicles will be assigned replacement code "T", and will remain in this code until AETC decides that replacements are needed. The decision to replace these vehicles will be based on overall condition. When required, select an applicable replacement code from this chapter to identify the vehicle lead time away from replacement.

5.6.2 Do not assign replacement codes to vehicles withdrawn from the Defense Reutilization and Marketing Service (DRMS) and issued as training mockups.

5.6.3 Special mounted equipment is defined as equipment which is not an integral part of the vehicle and is not included in the basic stocklist description for the vehicle. Examples are: test equipment, radar equipment, communications equipment, photographic equipment, generator sets and repair equipment mounted in or on general purpose trucks, trailers, semi-trailers or vans.

5.6.3.1 When figuring repair cost estimates, exclude the cost of repairs to special equipment.

5.6.3.2 When the vehicle is to be salvaged, consider the disposition of special mounted equipment independently. It may be economical to remove the special equipment before disposing of the vehicle. Materiel management policy published in AFMAN 23-110 and instructions issued by the item manager for the special equipment involved will govern the disposition.

5.6.4 Vehicles which have been declared obsolete by the item manager may be replaced, even though the projected life expectancy in years or miles has not been reached. The item manager will decide whether or not vehicles are obsolete and will notify the major commands, furnishing the stock number, a brief nomenclature and registration number. Major commands will notify their subordinate REMS activities.

5.6.4.1 REMS will notify VM&A when a vehicle has been declared obsolete. This notification will be in writing and will identify the registration numbers of the vehicles affected.

5.6.4.2 Obsolete vehicles may be operated until repair parts no longer can be obtained, unless otherwise directed by the item manager or the major command.

5.6.4.3 Refer to AFMAN 23-110 for guidance on processing obsolete vehicles to DRMS.

5.7 CHANGES.

Send recommended changes to this Technical Order to 580 CBSS/GBL, using guidelines of TO 00-5-1.

5.8 MAJOR COMMAND SUPPLEMENTS.

Major commands may supplement this chapter (see Paragraph 1.5.e of TO 00-5-1) to delegate repair approval authority, to set up command standard reporting procedures, and to provide guidance to subordinate organizations. Supplements, however, shall not conflict with the basic policy. Send an information copy to (HQ USAF/A4RE and 580 CBSS/GBL.

5.9 MAXIMUM ONE-TIME REPAIR ALLOWANCE.

The one-time repair allowance is the maximum amount of money which can be spent for repair of a vehicle at any one time. This allowance is based on two separate factors: miles/kilometers/hours accumulated and age. The factor which allows the smaller dollar value determines the repair allowance.

5.10 AGE.

Age starts from the date of acceptance embossed on the data plate attached to the vehicle. If missing from the data plate, the date of acceptance shown on the DD Form 250 will be used. If historical records for an older model vehicle are lost, and the acceptance date is not shown on the data plate, and all other sources for this information have been exhausted, use 1 Jan and the year indicated in the vehicle registration number as the acceptance date. For new vehicles, contact the item manager if the acceptance date cannot be determined locally.

NOTE

On the light/duty passenger carrying IPT; DD Forms 250 are no longer required because many of the manufacturers no longer provide them. The responses throughout the branch for the other IPTs were that DD Forms 250 are sporadically received as a result of the same experience, that not all manufacturers will provide them. The information normally provided by DD Forms 250 is being received via other means when DD Forms 250 are not available. The consensus is whenever DD Forms 250 are available, they will be ordered as part of the procurement package. When they are not available, the information will be required via some form of invoice/receiving document.

5.11 STANDARD PRICE.

The standard price is usually based on a weighted average of the last year's procurement cost (or in some cases, the last time the asset was purchased). The standard price of the I&S master stock number shall be used in making repair decisions since it represents the best estimate of the cost to buy a replacement vehicle. Prices are reviewed continuously and updated through the materiel management systems. Questions about standard pricing should be referred to the local AFEMS manager. If the standard price is not available locally, contact the item manager at 580 CBSS/GBL. (Refer to **https://sevpgm.robins.af.mil/vehicle/vmif/section3.asp** to identify the office symbol and contact information of the item manager).

NOTE

During repair/disposal decisions, major commands will consider factors not included in the I&S master NSN price (e.g., overseas transportation costs, foreign buy costs, and so forth).

5.12 REPAIR ESTIMATE.

The repair estimate will show the expected cost to make the vehicle safe and serviceable. Do not try to keep vehicles in a like-new condition. In figuring an estimate, consider where the vehicle will be repaired, i.e., by the base vehicle management activity, a nearby government installation, contract maintenance, or a depot repair activity. When preparing the repair estimate to decide whether or not the estimated cost of repair will exceed the one-time repair allowance, include the expenses listed below. Exception: Refer to Paragraph 5.21 when developing repair estimates for contractor maintained vehicles.

5.12.1 Direct labor.

5.12.2 Direct material.

5.12.3 Indirect expenses.

5.12.4 Other charges as may apply.

5.13 DIRECT LABOR.

Work which can be identified to a specific repair job is direct labor. Use the shop hourly labor rate when figuring the cost of direct labor.

5.14 DIRECT MATERIAL.

Material or supplies which can be identified to a specific repair job are direct material.

5.14.1 Determine the cost of all direct material which will he used to fix the vehicle.

5.14.2 Consumable items obtained from the normal materiel management system will be charged at the standard inventory price. Local purchase and COPARS consumable items will be priced at the invoice cost, including any transportation charges which you can identify. Items made locally will be charged at the actual cost.

5.14.3 Components and assemblies used in the repair process will be costed at the exchange price. For exchangeable parts obtained from the normal materiel management channels, a price of 50 percent of the stock list price will be used.

5.14.4 Tires are charged according to Chapter 4. The following information is provided for your convenience; check Chapter 4 for more detailed guidelines:

5.14.4.1 New tires will be charged to the vehicle at the full stock fund price.

5.14.4.2 New retreaded tires will be charged to the vehicle at the current retreading cost as computed in OLVIMS.

5.14.4.3 Used tires will not be charged to the vehicle.

5.15 INDIRECT EXPENSES.

Figure the total indirect expenses by multiplying the estimated direct labor hours by the total indirect expense rate. Get the indirect expense rate from the Employee Master List (PCN SB004-029) when available. If your activity does not have OLVIMS PCN SB004-029, refer to AFI 23-302.

5.16 OTHER CHARGES.

Other charges to be included in the repair estimate are:

5.16.1 Contract services and costs which can be identified to the repair job.

5.16.2 Cost of preparing the vehicle or part for shipment, if it cannot be fixed on site.

5.16.3 Cost of transportation from overseas to the CONUS and return. Note that transportation within the CONUS is excluded from the repair estimate.

5.16.4 Cost of repairs to modified equipment, winterization items, and follow-on corrosion control treatment. Note that the initial costs for buying and installing these items are excluded from the estimate.

5.16.5 Any other costs which can be identified to the specific repair job.

5.17 HOURLY LABOR RATE.

The local shop hourly rate will be computed in OLVIMS PCN N310029 according to AFCSM 24-1. Use the military labor rate in overseas areas where the indigenous or contract labor rate is lower than the military labor rate.

5.18 EXCLUSIONS.

When the repair estimate is to be used to decide whether repair is feasible, exclude the cost for maintenance, overhaul and replacement of items which are not included in the stock list description of the vehicle. Therefore, charges for checking and replenishing fluid levels and charges for installing and maintaining special mounted components or accessories shall be excluded from the repair estimate. Accordingly, the following items, except for accident repair estimates, will be excluded:

5.18.1 Fuel, oil, antifreeze and other fluids or servicing agents.

5.18.2 Two-way radios, fire extinguishers, tool kits, sirens, flashing lights, tire chains, and so forth.

5.18.3 The cost of modification kits and the initial installation.

5.18.4 Cost of winterization kit and initial installation.

5.18.5 Initial cost of corrosion, control treatment.

5.18.6 Transportation costs (except for overseas to CONUS).

5.18.7 Charges for purchase, installation and maintenance of special attachments which are base funded and not part of the basic vehicle.

5.19 DEPOT LEVEL REPAIR.

Send depot repair requirements to 580 CBSS/GBL in accordance with AFI 23-302 and Chapter 9. Do not reset hour meters or odometers on vehicles repaired at this level of maintenance.

5.20 ACCIDENT REPAIR ESTIMATES.

5.20.1 When preparing accident repair estimates, use standard material costs, i.e., prices obtained from the flat rate and parts manuals or from local vendor price lists. If the material item has exchange value, use the exchange price. Include in the estimate all direct and indirect costs associated with accident repairs.

5.20.2 When pecuniary liability has been established as a result of an accident, vehicles will be depreciated in accordance with AFMAN 23-220.

5.21 REPAIR ESTIMATES FOR CONTRACTOR MAINTAINED VEHICLES.

The repair estimate will be the total cost of contract services and expenditures which can be identified to the repair job. For the purposes of contract repairs, all labor and material charges are to be considered direct costs. Labor costs will be computed using the contractor's line item labor rate listed in the repair contract. Vehicles are beyond economical repair when the total contract costs exceed the OLVIMS computed repair allowance.

5.22 AUTHORIZATION FOR REPAIR.

Each time a vehicle comes to the shop for repair, the vehicle management activity will estimate how much the repairs will cost and then decide whether or not the vehicle should be fixed. Vehicle Management and Analysis will:

5.22.1 Estimate the repair cost (including direct labor, direct material, indirect expenses and other appropriate charges) as prescribed in Paragraph 5.12 of this chapter.

5.22.1.1 Prepare written repair estimates for major repairs, repairs that may cause the onetime repair limit to be exceeded and repairs for accident damage. Document these estimates in accordance with AFI 23-302.

5.22.1.2 It is, not necessary to prepare written repair estimates for minor repairs, except accident repairs.

5.22.2 Determine age of the vehicle. (See Paragraph 5.10).

5.22.3 Determine total accumulated miles, kilometers or hours-as applicable. This can be done by reading the odometer or the hour meter. Use the vehicle master list to estimate utilization if the odometer or hour meter is not working.

5.22.4 Determine the vehicle one-time repair allowance.

5.22.4.1 Copy the one-time repair allowance from the latest master list.

5.22.4.2 Use Figure 5-1, One-Time Repair Computation Worksheet, when manual computations are necessary.

5.22.4.3 The OLVIMS repair allowances and the manual One-Time Repair Allowance are based on the following formulas:

$$\text{Age Computation} = \text{Repl Price} \times \left(1 - \frac{0.9 \times \text{Age in months}}{\text{Life Expectancy in months}}\right)$$

$$\text{Utilization Computations} = \text{Repl Price} \times \left(1 - \frac{0.9 \times \text{Utilization*}}{\text{Utilization* Life Exp}}\right)$$

*In utilization computations use miles, kilometers, or hours as indicated in the vehicle's MHUK Code (Reference **https://sevpgm.robins.af.mil/mil/vehicle/vmif/section2.asp**). Use the age or utilization computation which results in the lower repair allowance. Repair allowance shall not be less than 15 percent of the standard price of the replacement vehicle.

5.22.5 Compare the repair estimate with the one time repair allowance.

5.22.5.1 If the one time repair allowance will not be exceeded and the vehicle has not reached its age or utilization life expectancy, proceed with the repair. However, vehicles which exceed any one of the life expectancy criteria (i.e., one-time repair allowance, age, miles/kilometers, or hours), are considered uneconomically reparable and repair approval must be obtained before work can be started.

5.22.5.2 Officials responsible for approving repairs must exercise good judgement when evaluating requests for repair. Consider mission impact, the length of time the vehicle is anticipated to remain in service, the projected date a replacement vehicle will be available, and amortization of the repair cost. Uneconomically reparable vehicles which are excess or nonessential to the base mission shall be reported for disposition, in lieu of performing the repairs.

5.22.5.3 See Paragraph 5.23 and Paragraph 5.24 for level of repair approval.

5.23 REPAIR AUTHORITY FOR MINIMUM ESSENTIAL REPAIRS.

Base level VFM/VMS may approve minimum essential repairs to uneconomically reparable vehicles.

5.23.1 Minimum essential repair is explained below:

5.23.1.1 Repair or replacement of minor components affecting driver visibility, safety or operation of the vehicle (e.g., a lighting system, mirrors, windshield wipers, carburetor, fuel pump, filter elements, muffler, fan belts, alternator, distributor, generator, voltage regulator, starter, water pump, components of brake system and cooling system or radiator) may be done as minimum essential repairs. The cost of minimum essential repair shall not exceed the one-time repair allowance.

5.23.1.2 Appearance repairs may be approved as minimum essential repairs when:

5.23.1.2.1 The repair is within the one-time repair allowance

5.23.1.2.2 The vehicle will be retained in service long enough to justify the repair, and

5.23.1.2.3 The approving official considers the vehicle's appearance prejudicial to the USAF image. Appearance or cosmetic repairs not affecting the safety or seviceability of the vehicle that exceed the one-time repair allowance must be approved by the Vehicle Fleet Manager (VFM), or equivalent.

5.23.2 Major repairs, which involve extensive rework of major components or assemblies, may not be authorized as minimum essential repairs. Refer to VFM or equivalent.

NOTE

Preparation of AFTO Form 91 is not required when a major repair is needed and the repair cost does not exceed the one-time repair limit for the vehicle. The Chief, Vehicle Management Flight, or equivalent is the approval authority. Approval for these repairs lies with the base level VFM/VMS along with other minimum essential repairs. Major repairs, which exceed the one-time repair, limit, will be processed in accordance with current procedures.

5.24 REPAIR AUTHORITY FOR MAJOR REPAIRS.

When a decision on major repairs is determined in accordance with Paragraph 5.26, the Logistics Readiness Squadron Commander or equivalent (may be delegated as appropriate) is the approval authority. Approval authorities will ensure that the following considerations are addressed:

5.24.1 Can the base mission be done if repair is not approved and vehicle is retired from service?

5.24.2 Can the base mission be done by reassigning another vehicle from a lower priority unit pending receipt of a replacement?

5.24.3 Is joint utilization of a vehicle by two or more units possible pending receipt of a replacement?

5.24.4 Which is more economical, repair of the vehicle or rental of another until replacement is received?

5.24.5 If this repair is made, how much use can be expected and will the additional vehicle utilization equal or exceed the value of the repair costs?

5.24.6 Is the repair absolutely necessary? Example: An engine has low compression and uses a quart of oil in approximately 500 miles/800 kilometers but has no audible knocks, exhaust doesn't contain unreasonable smoking, and otherwise operates satisfactorily. Replacement or repair of the engine is unnecessary. Or another example, valves are burned causing loss of power; then, only valve and seat reconditioning should be done.

5.24.7 A low utilization vehicle which is nearing its life expectancy in age may enter the shop for repair, the cost of which is within, but on the borderline of that authorized. In this instance, the VFM shall make a complete evaluation of the overall condition of the vehicle. If major repair will be required before the vehicle reaches its life expectancy and the repair cannot be depreciated totally, consider retiring the vehicle in lieu of repair.

5.25 SUBMISSION OF REPAIR REQUESTS FOR MAJOR REPAIR APPROVAL.

The base VFM, after determining that major repair is justified (see Paragraph 5.22) will request a repair decision using the following procedures:

5.25.1 Prepare a limited technical inspection (AFTO Form 91), listing only those major and minor repairs necessary to return the vehicle to a safe and serviceable condition.

5.25.2 Furnish a complete written evaluation of the vehicle's overall condition.

5.25.3 Forward AFTO Form 91 and evaluation via cover letter to Logistics Readiness Squadron Commander or equivalent (may be delegated as appropriate) for approval or disapproval.

5.25.4 Refer to Chapter 9 for guidance on submitting requests for depot level repair.

NOTE

Preserve the vehicle as required by Chapter 8 to prevent further deterioration while waiting for a repair decision.

STEP	ONE-TIME REPAIR ALLOWANCE WORKSHEET	SAMPLE LIFE EXP 6 YRS AND 100,000 MILES REPL PRICE: $60,000 CURRENT AGE: 48 MONTHS CURRENT MILEAGE: 40000	YOUR ANSWER
1 A	DIVIDE AGE IN MONTHS BY LIFE EXPECTANCY IN MONTHS.	48 / 72 = 0.6667	_____
1 B	DIVIDE MILES OR HOURS OR KILOMETERS OPERATED BY LIFE EXPECTANCY IN MILES, HOURS OR KILOMETERS. DATA MUST BE COMPATIBLE, DON'T DIVIDE HOURS BY MILES, E.G..	40000 MILES / 100000 MILES = 0.4000	_____
1 C	ENTER THE LARGER OF STEP 1A OR 1B.	0.667	_____
2	MULTIPLY 1C BY 0.9.	0.6667 X 0.9= 0.6000	_____
3	SUBTRACT STEP 2 FROM 1.0.	1-0.6000 = 0.4000	_____
4	IF ANSWER IN STEP 3 IS LESS THAN 0.15 CHANGE IT TO 0.15 AND ENTER ANSWER IN STEP 4. OTHERWISE JUST COPY STEP 3 ANSWER IN STEP 4.	0.400	_____
	MULTIPLY STEP 4 BY THE I&S MASTER NSN PRICE. (THIS GIVES YOU THE ONE-TIME REPAIR ALLOWANCE).	0.4000 X $60,000 = $24,000	

PN-TO36-1-191-007

Figure 5-1. One-Time Repair Computation Worksheet

5.26 CRITERIA FOR APPROVAL OF MAJOR REPAIRS.

Logistics Readiness Squadron Commander or equivalent (may be delegated, as appropriate) may authorize major repairs to uneconomically reparable vehicles when:

5.26.1 Vehicle is not obsolete.

5.26.2 Vehicle is not excess to base authorization.

5.26.3 Vehicle is essential to base mission.

5.26.4 Replacement cannot be effected by redistribution of a serviceable like item.

5.26.5 Suitable substitute is not available from base on-hand inventory.

5.26.6 New procurement replacement vehicle will not be available within 90 days.

5.27 DISPOSITION OF VEHICLES.

Vehicular equipment maintained in AFEMS and reported in the VMIF, at **https://sevpgm.robins.af.mil/vehicle/vmif/section2.asp** are coded as to criticality. Those that are considered critical in accordance with AFMAN 23-110 are coded "C" and those that are non-critical are coded "N". Based on criticality, disposition requests are processed as follows:

5.27.1 Disposition request for vehicles coded "N" which are obsolete, exceed their age or utilization (miles, hours, or kilometers) life expectancy, or are uneconomically reparable, will be forwarded to the squadron commander or operations officer. Upon approval of the squadron commander or operations officer, the vehicle will be processed directly to the disposal activity

5.27.2 Vehicles coded "N", which are serviceable or are economically reparable, and those coded "C" regardless of condition, when declared excess to the need of the major command will be reported to 580 CBSS/GBL for disposition or redistribution action.

5.27.3 An AFTO Form 91, Limited Technical Inspection-Motor Vehicle, will be prepared by the responsible vehicle management activity and forwarded with each vehicle disposition request to the owning MAJCOM.

5.28 REPLACEMENT CODES.

Vehicle replacement codes identify the status of the fleet for replacement programming. These codes, generated in OLVIMS, denote eligibility for immediate replacement or signal the need for programming of funds to permit retirement of vehicles as they become eligible. Replacement codes are key factors in determining and justifying vehicle replacement requirements. Vehicle Fleet Managers shall ensure that the replacement coding criteria published in the VMIF, at **https://sevpgm.robins.af.mil/vehicle/vmif/section2.aspare**

applied correctly and that these codes identify the true status of the vehicle fleet.

5.29 CODE ASSIGNMENT.

5.29.1 Codes A through U, as applicable, may be assigned when both age and utilization (miles/kilometers/hours) service life criteria have been assigned. The complete range of replacement codes generally is applied to general purpose vehicles, but may be appropriate for other categories as well.

5.29.2 Codes B, D, F, H, L, P, R, S, T and U will apply when service life is based on age alone. As a rule, these are the only codes which will be assigned to special purpose construction and base maintenance, and nonmotorized equipment. Check **https://sevpgm.robins.af.mil/vehicle/vmif/section2.asp** for exceptions.

5.29.3 Replacement codes normally are assigned by OLVIMS, based on service life and other criteria loaded in the vehicle master record. The vehicle management activity shall monitor the assignment of codes and make corrections when appropriate. Refer to the VMIF at **https://sevpgm.robins.af.mil/vehicle/vmif/section2.asp** for service life criteria, and use current OLVIMS procedures for loading these data in the master record.

5.30 EXPLANATION OF CODES.

5.30.1 A - Age, Miles/Kilometers/Hours, and One-Time Repair. Life expectancy years and miles/kilometers/hours have been reached or exceeded; the vehicle requires repairs which would exceed the one time repair allowance; and the repair approval authority has decided that only minimum essential repairs shall be made.

5.30.2 B - Age and One-Time Repair. Life expectancy years have been reached or exceeded; the vehicle requires repairs which would exceed the one-time repair allowance; and the repair approval authority has decided that only minimum essential repairs shall be made.

5.30.3 C - Miles/Kilometers/Hours and One-Time Repair. Life expectancy miles/kilometers/hours have been reached or exceeded; the vehicle requires repairs which would exceed the one-time repair allowance; and the repair approval authority has decided that only minimum essential repairs shall be made.

5.30.4 D - One Time Repair. Repair estimate exceeds the one-time repair allowance and the repair approval authority has decided that only minimum essential repairs shall be made.

5.30.5 F - Obsolete. Assign when the item manager declares the vehicle obsolete. The vehicle management activity will manually enter this code in OLVIMS upon notification.

5.30.6 G - Age and Miles/Kilometers/Hours. Life expectancy years and miles/kilometers/hours have been reached or exceeded.

5.30.7 H - Age. Life expectancy years have been reached or exceeded.

5.30.8 J - Miles/Kilometers/Hours. Life expectancy miles/kilometers/hours have been reached or exceeded.

5.30.9 K - Age and Miles/Kilometers/Hours Within One Year. Life expectancy years and miles/kilometers/hours will be reached within one year.

5.30.10 L - Age Within One Year. Life expectancy years will be reached within one year.

5.30.11 M - Miles/Kilometers/Hours Within One Year. Life expectancy miles/kilometers/hours will be reached within one year.

5.30.12 N - Age and Miles/Kilometers/Hours Within Two Years. Life expectancy years and miles/kilometers/hours will be reached within two years.

5.30.13 P - Age Within Two Years. Life expectancy years will be reached within two years.

5.30.14 Q - Miles/Kilometers/Hours Within Two Years. Life expectancy miles/kilometers/hours will be reached within two years.

5.30.15 R - Mid-cycle. Vehicle has reached or exceeded half of its programmed life expectancy in years. OLVIMS will automatically enter this code, using the age criteria in the vehicle master file. Lower replacement codes (A-Q), based on utilization, will take precedence over code R.

5.30.16 S - Depot Repaired Vehicles. Assign to depot repaired vehicles. See Paragraph 5.31.2 for special instructions.

5.30.17 T - Other. Will be assigned when replacement codes A through S and U do not apply.

5.30.18 U - Warranty (New/Remanufactured Vehicles). Assign while vehicle is under new vehicle or remanufacture warranty.

5.31 SPECIAL INSTRUCTIONS.

5.31.1 Codes A thru D.

5.31.1.1 Assign codes A thru D only when the vehicle, in addition to meeting other criteria for replacement - except Code D, requires repairs which would exceed the one-time

repair allowance AND the repair approval authority has ruled that the repairs need not be made. In making this determination, the approval authority will ensure that the repair estimate includes only those costs which are chargeable against the one-time repair allowance.

5.31.1.2 After the vehicle is coded A thru D, it may remain in service if its condition does not present a safety hazard to personnel or equipment, or until the vehicle is not longer operable.

5.31.1.3 When approved by the appropriate authority as outlined in Paragraph 5.23, minimum essential repairs may be made to keep the vehicle operable.

5.31.1.4 Place work order showing the major repair requirements used to establish codes A thru D in the vehicle record jacket. If a later decision is made to accomplish the major repairs, the vehicle management activity must ensure that the repair is recorded.

5.31.1.5 OLVIMS bases will document delayed maintenance according to AFI 23-302.

5.31.1.6 Non-OLVIMS bases will “flag” the vehicle historical record for vehicles assigned codes A thru D and code S

5.31.2 Upon receipt of a vehicle from depot rebuild, enter in the vehicle master record the year and month of depot repair.

5.31.2.1 When the vehicle is repaired locally on obligation authority (OA) citing depot maintenance funds, the item manager will tell the using activity whether or not to assign code S.

5.31.2.2 Upon assignment to code S, the vehicle will remain in this code for 60 months from the date of repair loaded in the master record, except where the one-time repair allowance would be exceeded and the decision is made not to repair the vehicle.

5.31.2.3 OLVIMS will release the vehicle from code S after 60 months and reassign a replacement code based on data loaded in the vehicle master record. The vehicle management activity will monitor code S reassignments and make corrections using the following criteria:

5.31.2.4 If OLVIMS assigns codes A thru L, change the vehicle’s age criteria so that OLVIMS will assign replacement code P.

5.31.2.5 No change is required when OLVIMS assigns codes P thru T, unless the one-time repair allowance would be exceeded and the decision is made not to repair the vehicle.

5.31.2.6 Do not use code U for vehicles under depot repair warranty. The vehicle management activity will monitor depot repair warranty period manually using the vehicle historical record.

CHAPTER 6
CORROSION PREVENTION AND CONTROL FOR AIR FORCE VEHICLES

6.1 GENERAL.

6.2 SCOPE.

This chapter establishes policies and procedures for controlling materials, processes, and levels of protection to be incorporated in, or performed upon Air Force (AF) vehicles or equipment for corrosion prevention and control. Paragraph 6.1 through Paragraph 6.13 contain general information pertaining to the scope of this publication, reference publications, definitions, AF policy, responsibilities, and levels of corrosion prevention. Figure 6-1 (Commercial General Purpose Vehicles) and Figure 6-2 (Special Purpose Vehicles) depict proper areas to apply corrosion preventive materials. Refer to the figures in this chapter for the application of preventive materials on military type vehicles. Table 6-3 rates AF installations as to the corrosive susceptibility of vehicles at or within close proximity to the installation. This table also includes the minimum effective wash cycle for the specified corrosion severity zone the equipment is assigned to or operating from. Paragraph 6.15 provides the local installation commanders and vehicle fleet managers with the knowledge-based tools to establish an effective corrosion prevention and control program.

6.3 REFERENCE PUBLICATIONS.

AFI 23-302	Vehicle Management
AFI 21-105	Air and Space Equipment Structural Maintenance
TO 00-35D-54	USAF Deficiency Reporting and Investigation System
TO 1-1-8	Application and Removal of Organic Coatings, Aerospace and Non-Aerospace Equipment
TO 1-1-691	Cleaning and Corrosion Prevention and Control, Aerospace and Non-Aerospace Equipment
TO 35-1-3	Corrosion Prevention and Control, Cleaning, Painting, and Marking of USAF Support Equipment (SE)
TO 36-1-131/TB 43-0213	Corrosion Prevention and Control Vehicle Management Index File (VMIF, formerly TO 36A-1-1301). This publication is only available at the 580 CBSS/GBL web site. Use the following web link to access and download the most current publication. https://sevpgm.robins.af.mil/vehicle/VMIF/.

6.4 DEFINITIONS.

6.4.1 Corrosion. Premature deterioration of metals or metallic components resulting from the action of service environment (oxidation) upon vehicle and vehicular components. Rate of deterioration is accelerated by infrequent/improper vehicle cleaning corrosion removal, and subjecting vehicle/components to ice control compounds.

6.4.2 Rust. Ferrous oxides resulting from chemical oxidation process acting on iron/steel (subjected to water or moist air).

6.4.3 Rustproofing. Protective coating applied to vehicles, vehicle components, and vehicle equipment for the express purpose of retarding and/or preventing the corrosion process.

6.4.4 Tropical Corrosion Control. Same as rustproofing with additional applications to other areas for more complete protection under highly corrosive climates/conditions.

6.4.5 Factory Corrosion Control. Any/all measures taken by manufacturer to ensure the finished product is protected from corroding. Actions taken may include rustproofing, zinc coating/dipping, and the use of plastics and/or composites and are intended to provide adequate protection in order to comply with manufacturer's stated warranty provisions.

6.4.6 Design Corrosion Control. Rustproofing/treatments performed prior to delivery of vehicles to AF using facilities. Primarily applies to Tactical Vehicles receiving treatment in accordance with TO 36-1-131 procedures and general purpose (GP) vehicles treated in accordance with manufacturer's standards

6.4.7 Initial Corrosion Control. Inspections conducted by AF organizations upon initial receipt of vehicle. Inspection to determine what treatment has been applied, the treatment sufficiency, and any additional treatments that are required.

6.4.8 Follow-On Corrosion Control. Method/efforts taken or employed by AF using activities to assure effective treatment of vehicles under local authority include those actions taken to maintain service life as defined in the VMIF and the necessary pursuit of warranty claims.

6.4.9 Undercoating. The application of coating compounds to vehicle chassis and underbodies for the purpose of sound and/or heat insulation. Undercoating is not a substitute for effective rustproofing.

6.4.10 Vehicle. Any wheeled or tracked commercial, special purpose, construction, or materiel handling type conveyance for which vehicle management has responsibility.

6.5 AIR FORCE POLICY.

6.5.1 The objective of vehicle rustproofing under the Air Force Corrosion Prevention and Control Program shall be to enhance safety and extend equipment service life. Concurrent with that aim, reduced costs, repair man-hours, and system/equipment downtime will be of paramount concern in preventive measures incorporated.

6.5.2 All newly procured commercial vehicles will be furnished with manufacturer's standard factory Type A rustproofing. The only exceptions are those vehicles procured for Foreign Military Sales (FMS) and Tactical applications. No additional treatment will be imposed unless documented Vehicle Historical Records dictate the need to revise this policy.

6.5.3 O&M funds shall be used for any added treatment required to comply with this policy. War Reserve Materiel (WRM) destined for long term storage shall be preserved and treated in accordance with Chapter 6 and Chapter 8.

6.6 RESPONSIBILITIES.

6.6.1 Local installation commanders shall exercise final responsibility for current procedures or modifications on all vehicles under their command as they deem necessary in light of safety, mission adequacy, and/or lifecycle maintenance economies. Commanders shall coordinate any change to levels of prevention and control imposed through the MAJCOM vehicle managers, Air Force Support Equipment and Vehicle Management Directorate (580 CBSS/GBL), and the Air Force Corrosion Prevention and Control Office (AFRL/MLS-OLR). Added treatment is considered necessary for vehicles operating in very severe and severe corrosion prone locations as listed in the appropriate column of Table 6-3.

6.6.2 Local vehicle managers shall be responsible for assuring that local Commander's standards imposed are met/preserved. Any Materiel Deficiency Reports (MDRs) attributed to corrosion are to be documented in vehicle historical records. Decision as to using in-house capabilities or contracting out, shall rest with local managers and bioenvironmental engineers. In-house capabilities will be used to the maximum extent possible.

6.6.2.1 The impact of corrosion is normally slow and is dependent on many factors such as time, operating location, preventive maintenance, etc.

6.6.2.2 Local vehicle fleet managers and technicians should be familiar with the different types of corrosion as shown in Paragraph 6.16, the types of preventive materials and processes listed in this technical order, and those referenced in Paragraph 6.3.

6.6.2.3 Utilizing the MDR system to elevate the early identification of corrosion problems to the MAJCOM vehicle manager, depot program manager and equipment specialist will greatly assist Air Force efforts in corrosion awareness in equipment design and corrosion preventive process development.

6.7 CORROSION CONTROL LEVELS.

Four levels of corrosion prevention are used.

6.7.1 Type A. Factory Rustproofing. Protective coatings applied by the vehicle manufacturer as the standard protection provided for all their commercial vehicles.

6.7.2 Type B. Mild Rustproofing. Protective coatings applied only to those areas visually exposed on the vehicle undercarriage. Types A & B are authorized at installations designated in Table 6-3 as subject to mild or moderate corrosion susceptibility.

6.7.3 Type C. Design Corrosion Control. Protective coatings/methods as defined in TO 36-1-131 and manufacturer's standards. Coatings are not to be applied above vehicle wheel wells. Type C is authorized for vehicles designated as tactical, WRM, M-series, SWA, and FMS.

6.7.4 Type D. Tropical Corrosion Control. Consist of complete treatment of all body surfaces and boxed-in internal structures as specified in Figure 6-1 and Figure 6-2 and for tactical vehicle and trailers listed in TO 36-1-131. Type D is authorized for installations designated in Table 6-3 under severe or very severe corrosion susceptibility.

6.8 INITIAL CORROSION CONTROL.

All new Air Force commercial vehicles will be shipped directly to AF users with only factory rustproofing applied. Based on local conditions, VFMs must determine to what extent each newly assigned vehicle is to be treated. The Acceptance Inspection will:

6.8.1 Determine the type corrosion prevention or control that has been applied.

6.8.2 Compare vehicle status with corrosion control standards set by local commanders, this publication, and manufacturer's best commercial practices, as applicable.

6.8.3 Ascertain if follow-on controls/methods are required and to what extent necessary. The VFM shall determine level and means. Specifications for local contracts shall be tailored from requirements contained in this publication.

6.8.4 Ensure all tactical vehicles have been rustproofed in accordance with TO 36-1-131.

6.9 FOLLOW-ON-CORROSION CONTROL.

6.9.1 Responsibility. The VFM is responsible for:

6.9.1.1 Upgrading corrosion prevention to meet those standards set by the local Commander.

6.9.1.2 Inspecting all assigned vehicles during PM&I for assurance that preventive standards are met.

6.9.1.3 Ensuring vehicles are restored to a condition designed to prevent significant vehicle deterioration under existing usage environments.

6.9.2 The local installation commander is responsible to establish and adjust standards to assure an effective program of corrosion control and prevention by employing the most cost-effective measures. Objective is to ensure each vehicle attains a nominal vehicle life cycle as defined in VMIF. The VMIF is available, using a military computer, by accessing the 580 CBSS/GBL website at the following address https://sevpgm.robins.af.mil/vehicle/vmif/.

6.10 EQUIPMENT AND MATERIALS REQUIRED.

Refer to Table 6-1 and Table 6-2.

Table 6-1. Required Equipment

Item	NSN
Automotive Vehicle Hydraulic Lift	4910-01-065-9540
Drum Pump, Airless Spray, 2-1 ratio (includes hose, gun, extension and tip)	4940-00-836-4215
Air Powered, liquid pressure cleaning pump (underbody and fenders)	4940-00-076-8200
Blast Cleaning Machine (for removing rust and foreign deposits)	4940-00-253-9515
Drill Motor, Portable 1/4” or equal	
Apron, vinyl coated fiberglass/rubber	* 8415-00-082-6108
Hydro Sander/Wet Sand	4940-01-230-5777
Gloves, Oil and Chemical	8415-00-268-7860
* Respirator, NIOSH approved for dust	4240-00-022-2524
* Respirator, NIOSH approved for spray painting	
Drill Set Twist 1/16” to 1/2”	5133-00-293-0983
** Brush, fiber	7920-00-205-2401
** Goggles, safety plastic	
** Brush, stainless steel wire	7920-00-282-9246
Formit CPC applicator wands	
Formit-18-360 PN 006227	6850-01-492-2942
Formit-18-360-F PN 006224	NSL
Formit-18-FOG PN 008352	NSL
Formit-18-90-FOG PN 009134	NSL
Formit-18-180 PN 006226	NSL
Formit-36-F PN 009130	NSL
Formit-36-360 PN 009131	NSL
Formit-48-STD-FOG PN 009133	NSL
Formit-48-360 PN 009132	NSL
Formit-48-90-FOG PN 009134	NSL
Formit spray wands are described with the middle number being the length of the spray can wand. The second designator is the type of spray pattern issuing from the wand such as 360 is a full circle, F is a fan, and FOG is a fine mist. STD-FOG signifies the fogging spray comes from the center of the spray comes from the center of the sprayhead. The 90-FOG signifies the spray comes from the side of the spray head. Formit applicators may be obtained from Zip-Chem Products, 1860 Dobbin Drive, San Jose, CA 95133, 1-800-648-2661.	

* Respirators listed here are for reference only. The base bioenvironmental engineers prior to the commencement of maintenance requiring the respiratory protection devices will approve all respirators utilized in vehicle management shop for the appropriate use.

** AS-457 should reflect all items listed above except those prefixed by an asterisk.

Table 6-2. Required Material

Material	Unit of Issue	NSN	Application
Cleaning Compound MIL-PRF-87937D Type I	Gl (1 Gl)	6850-01-390-7808	Terpene based, solvent emulsion, water diluteable cleaning compound. Best used on heavily soiled areas on painted and unpainted surfaces where sufficient ventilation is available. Depending on dilution ratio, may be used for general vehicle cleaning. Suitable for use on high gloss or tactical paint systems.
	Cn (5 Gl)	6850-01-390-7811	
	Dr (55 Gl)	6850-01-390-7816	
	Bulk	6850-01-390-7821	
Type II	Gl (1 Gl)	6850-01-390-7827	Water diluteable cleaning compound. Best used for general vehicle cleaning on painted or unpainted surfaces. Suitable for use on high gloss or tactical paint systems.
	Cn (5 Gl)	6850-01-339-5227	
	Dr (55 Gl)	6850-01-339-5228	
	Bulk	6850-01-390-7828	
Type III	Gl (1 Gl)	6850-01-390-9530	Gel-type (thixotropic, viscous) cleaning compound. Best suited for use on heavily soiled surfaces, painted or unpainted, where additional dwell time is desired (i.e., Should be used in areas that can tolerate high-volume water rinsing.
	Dr (55 Gl)	6850-01-390-9453	
	Bulk	6850-01-390-9558	
Type IV	Gl (1 Gl)	6850-01-429-2368	Heavy duty, water diluteable cleaning compound. Equally suited for cleaning both heavily soiled areas and general surfaces; may be used on painted or unpainted surfaces. Suitable for use on high gloss or tactical painted systems.
	Dr (55 Gl)	6850-01-429-2371	
Cleaning Compound MIL-PRF-85570D Type I	Cn (5 Gl)	6850-01-237-7482	(General purpose, solvent based) Cleaning of painted and unpainted surfaces. Check for regulatory compliance before using Type I because it contains aromatic solvents.
	Dr (15 Gl)	6850-01-237-8003	
	Dr (55 Gl)	6850-01-237-8004	
Type II	Gl (1 Gl)	6850-01-239-0571	(General purpose, non-solvent based) Cleaning of painted and unpainted surfaces. Water based formula may be used on both high gloss and camouflage paint systems.
	Cn (5 Gl)	6850-01-235-0872	
	Dr (15 Gl)	6850-01-248-9828	
	Dr (55 Gl)	6850-01-236-0128	
Type III	Cn (5 Gl)	6850-01-232-9164	(Gloss paint cleaner) Abrasive spot cleaner for high gloss paint surfaces where the Type II cleaner is not effective.
Type IV	Cn (5 Gl)	6850-01-235-0873	(Flat paint cleaner) Use on low gloss tactical paint scheme coatings to remove stubborn contaminants such as boot marks and smudges as well as gun blast and exhaust tack soil.
	Dr (15 Gl)	6850-01-248-9829	
	Dr (55 Gl)	6850-01-248-9830	

Table 6-2. Required Material - Continued

Material	Unit of Issue	NSN	Application
Type V	Cn (5 Gl)	6850-01-234-0219	(Gel-type cleaner) Thixotropic cleaner for vertical and overhead areas where complete rinsing with water can be tolerated. clings to vertical or overhead
	Dr (15 Gl)	6850-01-248-9831	
	Dr (55 Gl)	6850-01-235-7458	
Coating, Polyurethane, Gloss Advanced			Preval Spray/Power Pack Spray System
Performance Coating/ Extended Life Topcoat	Ea	NSL	11136 Red Gloss (PN 99R020-1TU)
	Ea	8010-01-501-5573	12197 International Orange
			13538 Yellow (PN 99OR003-1TU)
	Ea	NSL	15044 Dark Blue (99Y014-1TU)
	Ea	NSL	16473 Light Gray (PN 99BL013)
	Ea	8080-01-501-5574	17038 Black (PN 99GY029)
	Ea	8010-01-501-5575	17925 White (99W035)
	Ea	8010-01-501-5576	
Coating, Polyurethane, Gloss Touchup Brush SEMPEN	Ea	8010-01-441-6017	Clear
	Ea	8010-01-441-6018	11136 Red Gloss
	Ea	8010-01-441-6019	12197 Orange
	Ea	8010-01-441-6003	13538 Yellow
	Ea	8010-01-441-6004	15044 Dark Blue
	Ea	8010-01-441-6005	15050 Dark Blue
	Ea	8010-01-441-6020	16473 Light Gray
	Ea	8010-01-441-6026	17038 Black
	Ea	8010-01-441-6029	17925 White
Coating, Polyurethane, MIL-PRF-85285D, Type I, Semi-Gloss Advanced	Ea	NSL	23538 Yellow (PN 99Y013)
	Ea	NSL	24052 Forest Green (999GN001)
Performance Coating/ Extended Life Topcoat, Preval Spray/Power Pack Spray System	Ea	NSL	27038 Black (99BK005)
Coating, Polyurethane, MIL-PRF-85285D, Type I, Semi-Gloss Touchup Brush, SEMPEN,	Ea	8010-01-441-6006	
Coating, Preservative Rubber A-A-52408	Gl	8030-01-282-5626	
Coating, Preservative Rubber Protection	Bt	8030-01-103-2868	Vehicle tops, vinyl spray upholstery, tires, bottles leather and plastic

Table 6-2. Required Material - Continued

Material	Unit of Issue	NSN	Application
Coating, Primer, Epoxy Polyamide Yellow, MIL-PRF-23377J, Preval Spray/Power Pack Spray System	Ea	8010-01-495-8652	02Y040-2TU
Coating, Primer, Epoxy Polyamide Touchup Yellow, MIL-PRF-23377J, Type I	Ea	8010-01-441-6030	
Coating, Primer, Waterborne Epoxy Yellow MIL-PRF-85582, Type I, Class C2, SEMPEN	Ea	8010-01-441-6032	
Coating, Touchup MIL-PRF-85285, Type I Coating, Polyurethane, Flat Touchup SEMPEN Brush	Ea	8010-01-441-6008	31136 Red
	Ea	8010-01-441-6009	33538 Yellow
	Ea	8010-01-441-6010	35044 Dark Blue
	Ea	8010-01-441-6021	36118 Gray
	Ea	8010-01-441-6028	37038 Black
	Ea	8010-01-441-6016	37875 White
Coating, Walkway Compound Non-slip A-A-59166	Gl	5610-00-641-0426	Dark Gray 36231
	Gl	5610-00-141-7842	Light Gray 36440
	Gl	5610-00-641-0427	Black 37038
*1 Corrosion Preventive Compound (Grade 1) A-A-59295	Dr (16 Gl)	8030-01-127-3684	Inside doors, rocker panels, door posts, and inside trunk lids
		8030-01-134-6513	
	16 oz. aerosol	8030-00-221-1834	
*1 Corrosion Preventive Compound, Solvent Cutback, Cold Application MIL-PRF-16173E Class II, Grade 1 (Hard Film) Class I, Grade 2 (Soft film)	Pt	8030-01-396-5731	Long term protection of metal surfaces against corrosion with or without coverings (indoors or outdoors).
	Gl (1 Gl)	8030-01-396-5732	
	Cn (5 Gl)	8030-01-347-0970	
	Dr (55 Gl)	8030-01-396-5237	
	Cn (Aerosol)	8030-00-118-0666	Thick, grease-like consistency for protecting metal surfaces against corrosion during rework or storage. Includes extended indoor protection of interior or exterior surfaces without the use of barrier materials. Exterior surfaces (Seams, joints, behind molding strip, window trim and other hard to reach areas)
	Qt	8030-01-149-1731	
	Gl (1 Gl)		
	Cn(5 Gl)		
	Dr (55 Gl)	8030-00-244-1295	
Class 1, Grade 3	Qt		For outdoor protection, this material can only be used for a limited time where temperature is not extreme. Grade 3 may be used on radiator exteriors.
	Qt		

Table 6-2. Required Material - Continued

Material	Unit of Issue	NSN	Application
*4 Class II, Grade 4 (Transparent, non-tacky soft film)	Pt	8030-01-396-5738	Thin, transparent, tack-free protective film for protection of metal surfaces against corrosion during indoor storage and limited outdoor preservation. Use on control cables, fasterners, bare metal areas, or anywhere temporary (30 days or less) protection is needed
	Gl (1 Gl)	8030-01-396-5743	
	Cn (5 Gl)	8030-01-347-0972	
	Dr (55 Gl)	8030-01-396-5736	
Corrosion Preventive Compound, Water Displacing, Clear (AMLGUARD) MIL-DTL-85054C			
Type I (Aerosol)	Cn (12 oz)	8030-01-066-3971	Temporary repair of small paint damage areas from chips, scratches, or cracks. Intended for use on non-moving parts not requiring a lubricated surface, such as fasterners, seams, access panels, joints, unpainted metal, etc
	Cn (16 oz)	8030-01-041-1596	
Type II (Bulk form)	Bt (32 oz)	8030-01-347-0983	
	Qt	8030-01-347-0981	
	Cn (5 Gl)	8030-01-347-0982	
*2 Corrosion Preventive Compound, Water Displacing, Ultra-Thin Film MIL-PRF-81309F			
Type II (Soft film) Class 1	Gl (1 Gl)	8030-00-213-3279	Water displacing CPC which may be applied by dipping, spraying, brushing or from pressurized containers.
(Non-pressurized)	Cn (5 Gl)	8030-00-262-7358	Suitable for use on any metal surface for indoor and short term outdoor protection where surfaces can be recoated when required.
	Dr (55 Gl)	8030-00-524-9487	
*3 Class 2 (aerosol container) Type III, (Soft film, avionic grade)	Cn (16 oz)	8030-00-938-1947	Water displacing CPC for use on avionic equipment, electrical connector plugs, and contact points
Class 1 (Non-aerosol)	Gl (1 Gl)	8030-01-347-0978	
Class 2 (aerosol)	Cn (16 oz)	8030-00-546-8637	
Lubricant, Cleaner, and Preservative for Weapons and Weapons Systems (CLP) MIL-PRF-63460D(6)	Bt (4 oz Squeeze)	9150-01-079-6124	Lubrication and short term preservation of aircraft hinges, and small and large caliber weapons. NOTE: Do not use MIL-PRF-63460D(6) on rubber or other elastomeric materials. Use only in areas from which solvents can evaporate
	Pt (16 oz Sprayer)	9150-01-054-6453	
	Qt (32 oz Sprayer)	9150-01-327-9631	
	Gl (1 Gl)	9150-01-053-6688	

Table 6-2. Required Material - Continued

Material	Unit of Issue	NSN	Application
*6 Corrosion Preventive Compound, Electronics Grade with VCI	Gl (1 Gl)	6850-01-328-3617	Water displacing CPC for use on electronic, connectors and components, electrical motors, relays and terminals, light fixtures, storage batteries, all mechanical close-tolerance components such as piano hinges on all interior or exterior metal surfaces
Corrosion Preventive Spray On Sound/ Heat Insulation	Dr (55 Gl)	8030-00-709-3327	Vehicle undercoating (underside of chassis, hood)

WARNING

Do not mix the prepaint corrosion removing compounds with or allow the prepaint corrosion removing compounds to come in contact with other acids or acid solutions. Not for use on aluminum or magnesium type metals.

Corrosion Remover, MP7 (Prepaint)	Dr (5 Gl)	6850-00-656-1291	Water soluble dissolver surface rust and oxidation on metal surfaces prior to painting
Plugs, Cap, Protective Dust	Hd	5340-00-240-9228	Rustproofing drain hole plugs
Sealing Compound, Low Adhesion, Corrosion Inhibiting	Kt	8030-00-291-8380 A-1/2 (6 oz)	For low adhesion fillet and faying surface sealing of removable structures such as panel doors, floor panels, and plates.
	Kt	8030-00-584-4399 A-2 (6 oz)	
	Tu	8030-01-127-8281 A-2 (12 oz)	
	Ca	8030-00-152-0062 A-2 (2.5 oz)	The number next to the letter signifies the working life of the mixed sealant in hours.
Sealing Compound, non hardening Zip-Chem's ZC-027L	Bx	6850-01-406-2060	Provides corrosion protection for multi-metal components and parts enclosed in non-ventilated control boxes, cabinets or tool boxes up to 5 cubic feet in volume.
Wash Down Additives for use on steel equipment and parts to remove salt deposit	Bx	6850-01-470-3319	Saltbuster®
	Co (5 Gl)	6850-01-470-3304	
	Dr (55 Gl)	6850-01-470-3312	
		NSL	Corroseal-CHLOR*RID DTS™

NOTE

*1. Appropriate rustproofing grade required is denoted in the Application figures. (Refer to Paragraph 6.7, Figure 6-1, Figure 6-2 and TO 36-1-131)

*2. ZC-010 may be used as a preferred material for MIL-C-81309F, type 2. ZC-010 may be obtained from Zip-Chem, 400 Jarvis Drive, Morgan Hill, CA 95307.

Table 6-2. Required Material - Continued

Material	Unit of Issue	NSN	Application
*3. CORTEC VCI-369 may be used for coating exterior and interior recesses and radiators. Materials may be obtained through GSA or CORTEC Corporation, 4119 White Bear Parkway, St Paul MN, 55110.			
*4. Cor-Ban 35 may be used as the preferred materials for MIL-PRF-16173E Grade 2. Cor-Ban 35 may be obtained through GSA or Zip-Chem Products, 400 Jarvis Drive, Morgan Hill, CA 95307.			
*5. Dinol TK5941 Rock-kote may be used as an optional method for coating chipping protection on Air Force Vehicles. It can be applied over primer, used as a topcoat over paint, or can be applied to bare metal and then painted with standard vehicle paint.			
*6. Material identified by this asterisk may be used as a preferred material for application on electrical connectors and/or contact points.			
Additional corrosion and cleaning related consumable materials can be found in TO 1-1-691, Appendix A.			

6.11 PREPARATION FOR TREATMENT.

6.11.1 The instructions outlined herein are intended for all makes and models of AF vehicles, new or used. The illustrations in Figure 6-1 and Figure 6-2, are for concept only. Personnel assigned to accomplish this treatment will exercise good judgment in performing the task efficiently and ensure all corrosion prone areas are treated. Particular attention must be given to those sections of a vehicle that are most susceptible to corrosion when operating in tropical, subtropical, and coastal regions and in areas where salt solutions are used for snow and ice removal

6.11.2 Inspection. Vehicles received shall be inspected to determine compliance with standards set by the local Installation Commander. Each vehicle will be inspected in conjunction with the PM&I. Results shall be entered on AF Form 1823.

6.11.3 Cleaning.

6.11.3.1 Cleaning of the vehicle will require placing it on a lift and raising it to proper working level. The recommended procedure is to begin at the front and work toward the rear as follows: Front splash panel, headlight area, front fenders, panels and supporting members, fender beads, floor pan, rocker panels, quarter panels, fuel tank, tail and back-up light area and rear splash panel. Remove heavy deposits of rust, loose undercoating, mud, gravel and foreign material by using wire brush, putty knife, screw driver, rubber hammer or improvised tools, paying particular attention to seam welds and corners.

WARNING

Removal of heavy deposits creates airborne particles which may be hazardous to eyes. Eye protection is required.

6.11.3.2 For an extremely dirty underbody, it may be advisable to PRESSURE clean the area first before steam method. Warm water and mild detergent solution should suffice. The coating materials listed have excellent adhesions to moist or wet surfaces and will displace water permitting immediate application of the coating compounds soon after surfaces have been washed.

WARNING

Drilling creates airborne particles which may be hazardous to eyes. Eye protection is required.

6.11.3.3 Examine vehicle for inspection type openings before drilling any special holes. Holes drilled for the purpose of applying material should not exceed 1/2 inch diameter. Such holes are to be blocked or capped with plastic or rubber seal type caps after completion of rustproofing in the area. There are a number of manufacturers marketing plastic plugs for closing holes.

6.12 RUSTPROOFING APPLICATION.

WARNING

With airless spray equipment, the compound is discharged from the nozzle at extremely high pressure and could easily penetrate the skin. A protective shield is required between person spraying and object being sprayed. To avoid serious injury, keep fingers away from spray nozzle. Gloves and face shield or goggles shall be worn while operating the spray equipment. If accomplished at in-house facilities, proper ventilation, equipment, and trained personnel shall be utilized.

CAUTION

Use care to avoid getting rustproofing materials on upholstery, soft trim, and seat belt retractor mechanism which are located behind trim panels or inside door posts.

6.12.1 TO 36-1-131/TB 43-0213 provides guidance for the proper placement of rustproofing access holes and methods of rustproofing application. Follow the procedures in TO 36-1-131/TB 43-0213 unless they conflict with those provided in this manual. In the case of procedural conflict, the requirements in this TO take precedence.

6.12.2 Spraying is quick and effective and is the best means of coating hard-to-reach areas. The majority of applications will require an airless type spray pump and an airless spray tip of 0.031 orifice diameter with a 100-mesh screen. It may be necessary to use flexible tip extensions. Use product manufacturer's recommendation for air pressure when applying Grade 1 material. It is extremely important that the spray equipment be adjusted to spray the particular area. Test the spray gun pattern to insure that inside or hidden body panels will have complete coverage without using excessive amounts of compound.

WARNING

With airless spray equipment, the compound is discharged from the nozzle at extremely high pressure and could easily penetrate the skin. A protective shield is required between person spraying and the object being sprayed. To avoid serious injury, keep fingers away from spray nozzle. Gloves and face shield or goggles shall be worn while operating the spray equipment. If accomplished at in-house facilities, proper ventilation, equipment, and trained personnel shall be utilized.

6.12.3 Work must be accomplished in a well-ventilated area such as a lubrication bay. Masking of vehicle prior to application of these corrosion preventive materials is not required, neither is removal of components. However, wheels may be removed to improve accessibility to wheel-well area.

6.12.4 Material should be applied in layers of equal thickness not to exceed 1/16 inch. Coatings of greater thickness wastes material.

6.12.5 When any excess rustproofing material appears on exterior surfaces due to overspray (drips or runs in seams, smudged surfaces of windows and upholstery), it shall be removed. A mixture consisting of equal parts of mineral spirits and water is recommended for removal of such residue. Care should be exercised to prevent excessive solvent solutions from removing rustproofing compounds from treated areas.

6.12.6 It is imperative that drain and vent holes do not become clogged. After applying rustproofing materials, all drain holes or passages must be checked to ascertain that excess material has not accumulated in the drain area, restricting use of the drain hole.

6.12.7 Processing of the vehicle must not leave it with smudged windows or inadvertently cause interference with any mechanical or electrical functioning of the vehicle.

6.12.8 Inadequate coating of inner surfaces in corrosive environments will quickly result in internal destruction of parts or assemblies, beginning in the hidden or inside areas and working outward. Therefore, the corrosion preventive measures that must be considered are twofold, (1) provisions for protection of exposed surfaces and (2) provisions for protection of inner surfaces, which are often completely bare metal without any prior protective coatings. Some rocker panels, brackets, braces, hood areas, and center posts may have hidden baffles. Probing with applicator wand will locate these potential blockages and determine need for hole drilling and treatment. Both sides of such baffles should be coated.

6.13 FOLLOW-ON APPLICATION.

6.13.1 Spot rustproofing is required to protect an area of the vehicle that has had the corrosion preventive material removed due to accident or damage or where corrosion is evident.

6.13.2 Clean affected area by method described in Paragraph 6.11.3.

6.13.3 Rustproofing materials and CPCs will deteriorate over time and will require occasional reapplication. Most corrosion preventive compounds can be effectively used over previously applied rustproofing, if these old coatings are still tightly adhered to the vehicle.

6.13.4 Apply corrosion prevention compounds per Paragraph 6.12.

6.14 TABLES OF APPLICATION.

Areas described in Figure 6-1 apply to all commercial general-purpose vehicles whether passenger car, small or large truck, station wagons, or similar equipment. Figure 6-2 lists special purpose vehicles having distinct features requiring application data not explicitly covered by general application requirements of Figure 6-1. TO 36-1-161 provides the requirements for rustproofing military series equipment.

AREA	APPLICATION
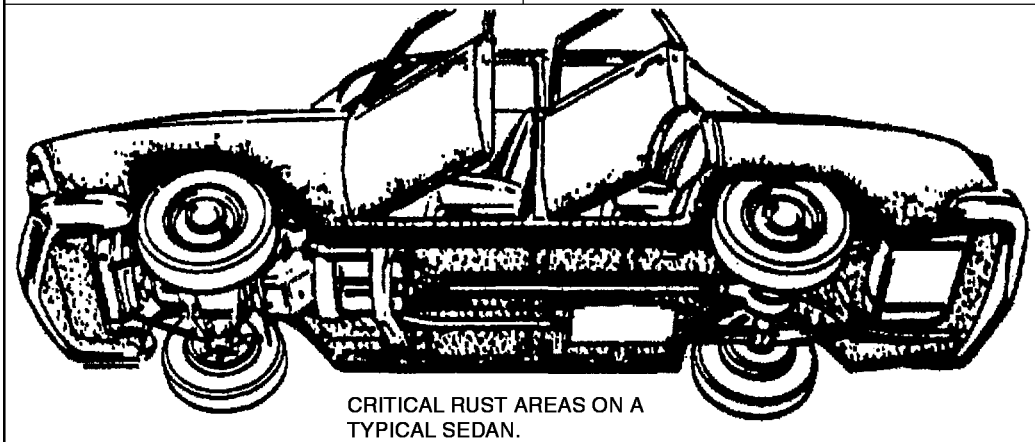 CRITICAL RUST AREAS ON A TYPICAL SEDAN.	
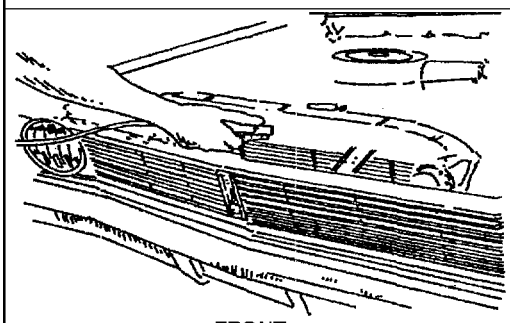 FRONT	RADIATOR SHIELD AND GRILLE PANEL ASSEMBLY, PLUS GRAVEL SHIELD OR PANEL.
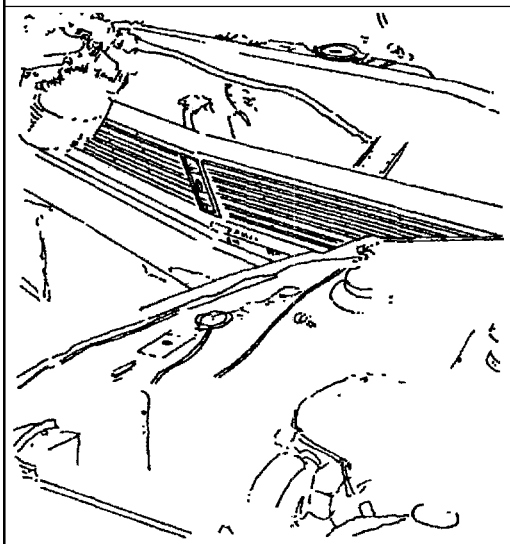 RADIATOR	EXTERIOR (FRONT AND BACK SIDES). SPRAY EXTERIOR SURFACE RADIATOR CORE NEXT TO MOTOR FAN WITH FIRST COAT OF GRADE 3. START MOTOR TO RUN A LITTLE ABOVE IDLE, THEN SPRAY FRONT AREA OF RADIATOR CORE AND LET FAN SUCTION DRAW IN THE MATERIAL FOR COMPLETE COVERAGE. REPEAT THIS SCHEDULE WITH SECOND COAT, USING GRADE 3.

PN-TO36-1-191-078

Figure 6-1. Commercial General Purpose Vehicles (Areas of Application) (Sheet 1 of 12)

AREA	APPLICATION
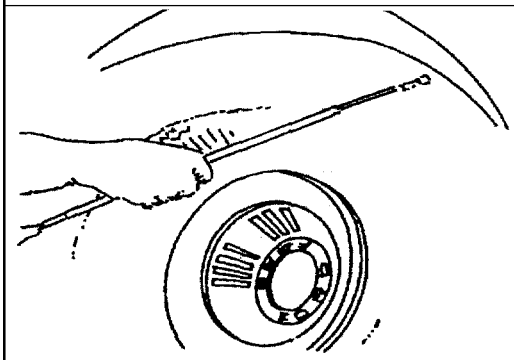 FRONT FENDER	BEHIND GRILLE AND HEADLIGHTS, LIGHT WELLS, EYEBROWS, UNDERSIDE OF FENDER, ALL ENCLOSED, BOXED-IN AND SUPPORT SECTIONS. TREAT THE SURFACE OF THE FENDER WELL, FENDER BEAD AND HEAVY SPLASH AREA, BAFFLES AND SUPPORTING MEMBERS. THE SHORT CURVED WAND MAY BE USED TO SPRAY FENDER BEADS. SOME VEHICLES MAY BE SO CONSTRUCTED THAT ACCESS TO HEADLIGHT AREA WILL BE EASIER FROM ABOVE WHEN THE VEHICLE IN ON THE FLOOR. IN SOME CASES ACCESS HOLES MAY BE PRESENT OR IT MAY BE NECESSARY TO REMOVE THE HEADLIGHT. A SHORT CURVED WAND MAY BE USED TO GAIN ADVANTAGE IN THE APPLICATION.
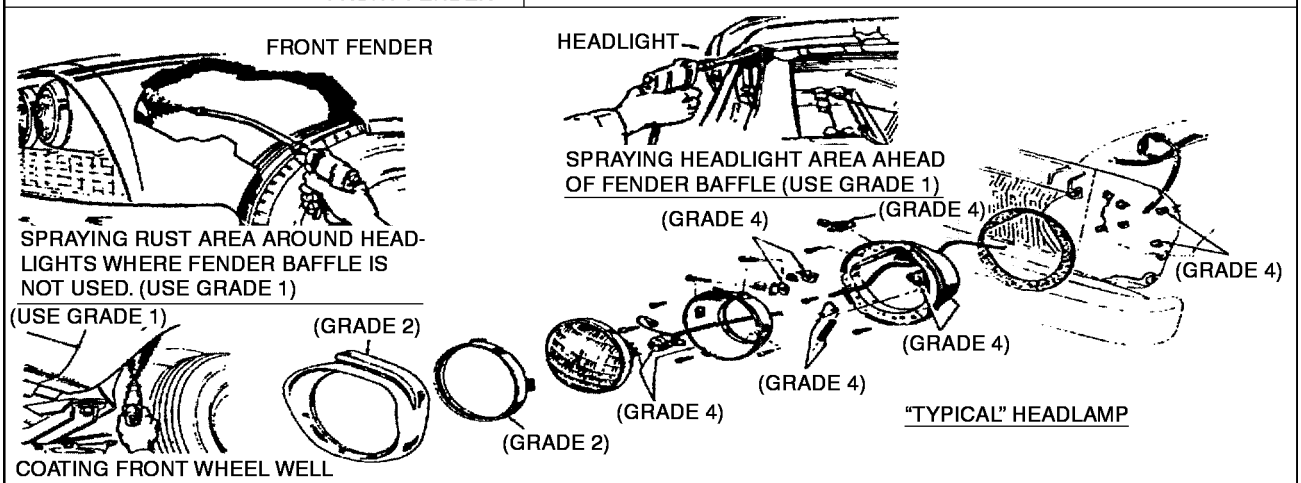	
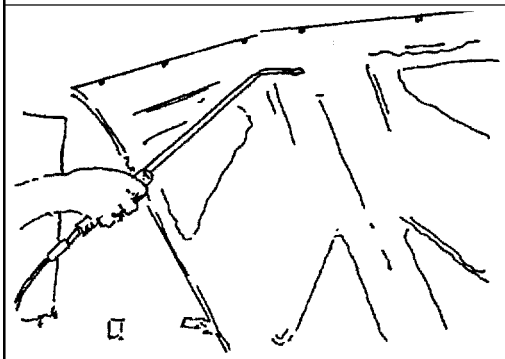 HOOD	FRONT AREA OF HOOD, INSIDE OF BOXED-IN OR SUPPORT SECTIONS, UNDERSIDE, BATTERY BOX AND VENTS. 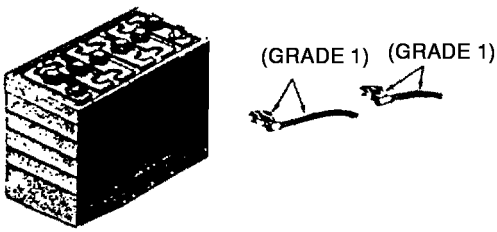

PN-TO36-1-191-079

Figure 6-1. Commercial General Purpose Vehicles (Areas of Application) (Sheet 2)

AREA	APPLICATION
COWL AND ROOF	COWL, PILLAR AND HINGE BOX SECTION, INCLUDING ALL BOXED-IN SUPPORT SECTIONS AND DOUBLE PANELED SECTIONS, INSIDE AREA OF ROOF AND INSIDE OF ROOF PANELS.
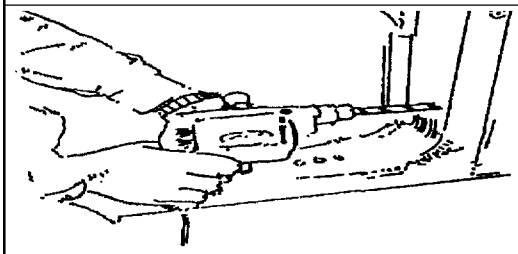 DOOR POST, CENTER 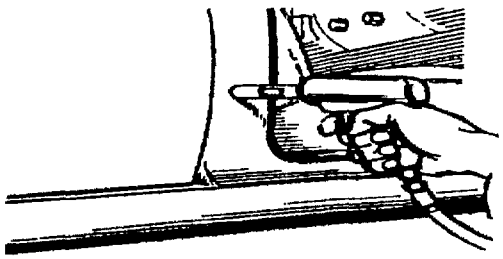	IT MAY BE NECESSARY TO DRILL A 1/2 INCH HOLE IN THE POST NOT MORE THAN 8 IN UP FROM THE ROCKER PANEL, IF DOOR POST IS CONCEALED WHEN THE DOORS ARE CLOSED, THE HOLE MAY BE MADE FROM THE BACK SIDE TO PREVENT IT FROM SHOWING. INSERT SHORT CURVED WAND IN A DOWNWARD DIRECTION AND SPRAY. SPRAY WITH GRADE 1
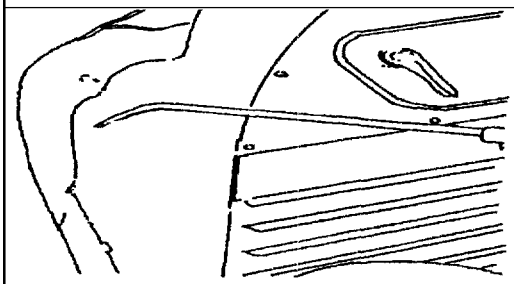 DOOR PILLAR, FRONT	TREATMENT OF THE FRONT DOOR PILLAR MAY BE POSSIBLE THROUGH THE DOOR HINGE OPENING. IF NOT, DRILL A 1/2 INCH HOLE APPROXIMATELY EIGHT INCHES FROM THE BOTTOM OF THE PILLAR. INSERT SHORT CURVED WAND IN A DOWNWARD DIRECTION. IN SOME CASES, THIS OPENING WILL PROVIDE ACCESS TO THE AREA BEHIND THE FRONT FENDER AND BAFFLE. SPRAY WITH GRADE 1
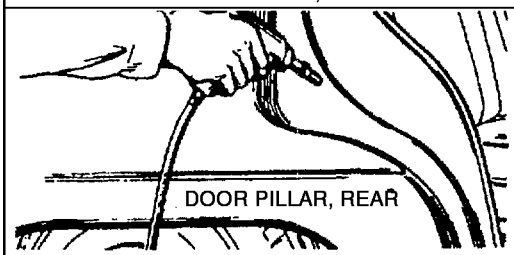 DOOR PILLAR, REAR	IF THIS AREA IS NOT ACCESSIBLE FROM THE TRUNK, DRILL A 1/2 INCH HOLE IN A NON-CRITICAL STRUCTURAL AREA OF THE POST. THE HOLE SHOULD BE LOCATED WHERE THE TWO PANELS DIVERGE ENOUGH TO PROVIDE ROOM TO INSERT THE CURVED WAND IN A DOWNWARD DIRECTION. POSITION OF HOLE TO SPRAY INSIDE REAR DOOR PILLAR.

PN-TO36-1-191-080

Figure 6-1. Commercial General Purpose Vehicles (Areas of Application) (Sheet 3)

AREA	APPLICATION
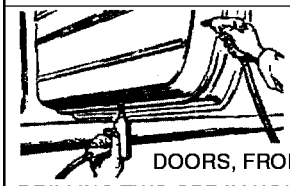 DOORS, FRONT AND REAR DRILLING TWO SPRAY HOLES IN DOOR 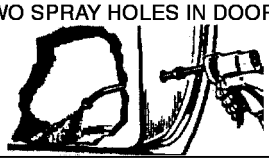 SPRAYING INSIDE A DOOR	WINDOWS SHOULD BE IN RAISED POSITION. ON SOME VEHICLES PLUGGED INSPECTION HOLES CAN BE USED. IF NONE ARE AVAILABLE, 1/2 INCH HOLES MUST BE DRILLED. CHECK DRAIN HOLES IN BOTTOM EDGE OF DOOR TO BE SURE WATER HAS DRAINED FROM DOOR. HOLE SHOULD LOCATED IN EACH DOOR END PANEL APPROXIMATELY SIX TO EIGHT INCHES FROM THE BOTTOM. INSERT LONG STRAIGHT WAND TO TREAT THE LOWER DOOR PANEL AREA. DIRECT SPRAY DOWNWARD TO PREVENT COMPOUND FROM REACHING WINDOW REGULATOR AND TO INSURE COMPLETE COVERAGE OF THE CRITICAL AREAS INSIDE THE DOOR. PLUG ALL HOLES. CHECK DRAIN HOLES TO BE SURE THE ARE OPEN. USE GRADE 1.
DOG LEGS	DOG LEGS AND BOXED-IN SECTION. USE GRADE 1.
WHEELHOUSE FROM INSIDE TRUNK, SPRAYING BETWEEN WHEELHOUSE AND REAR FENDER. QUARTER PANELS 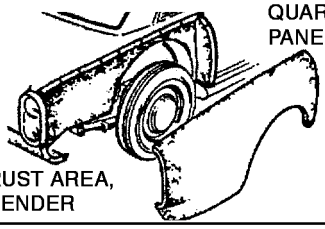 TYPICAL RUST AREA, BOLT-ON FENDER	QUARTER PANELS AND REAR FENDER WELLS, INCLUDING ALL BOXED-IN AND DOUBLE PANEL SECTIONS, UP TO AND INCLUDING 16 INCHES FROM BOTTOM. ACCESS TO THIS AREA MAY BE THROUGH AN INSPECTION PLUG NEAR THE BOTTOM OF THE PANEL. THIS MAY BE AN OPEN PANEL AND CARE MUST BE TAKEN TO AVOID EXCESSIVE SPRAYING WHICH COULD RESULT IN MATERIAL PENETRATING THE TRUNK AREA. ON SOME VEHICLES THIS AREA MAY BE TREATED FROM INSIDE THE TRUNK. IN SOME CASES 1/2 INCH HOLES MAY NEED TO BE DRILLED IN THE REAR DOOR PILLAR HIGH ENOUGH TO CLEAR THE INNER WHEEL HOUSING. THIS HOLE SHOULD BE LOCATED WHERE THE TWO PANELS DIVERGE ENOUGH TO PROVIDE ROOM TO INSERT THE SHORT CURVED WAND. PLUG HOLES WHEN COMPLETED. USE GRADE 1

PN-TO36-1-191-081

Figure 6-1. Commercial General Purpose Vehicles (Areas of Application) (Sheet 4)

AREA	APPLICATION
ALL FRONT AND REAR LIGHT WELLS AND PANELS. IF REAR LIGHTS ARE NOT ACCESSIBLE FROM UNDERNEATH, THEY MAY BE REACHED THROUGH THE TRUNK WHEN VEHICLE IS ON THE FLOOR OR GROUND.	

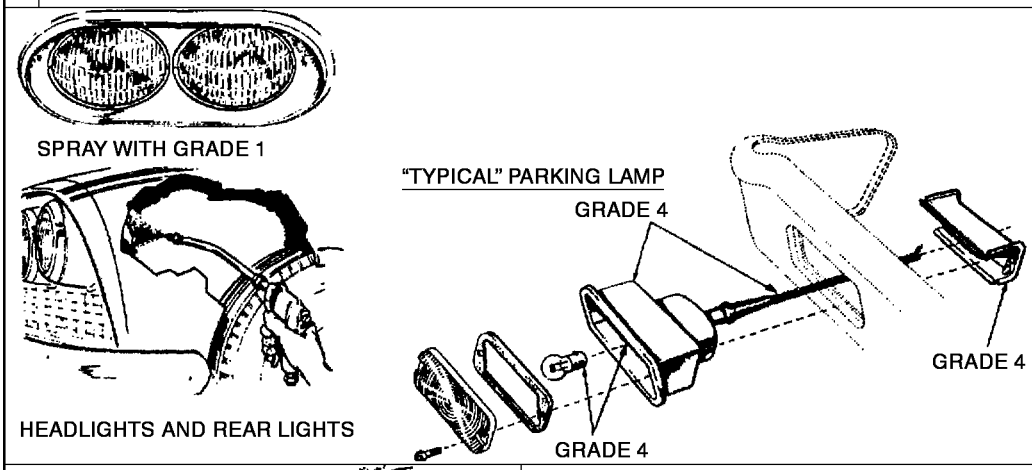

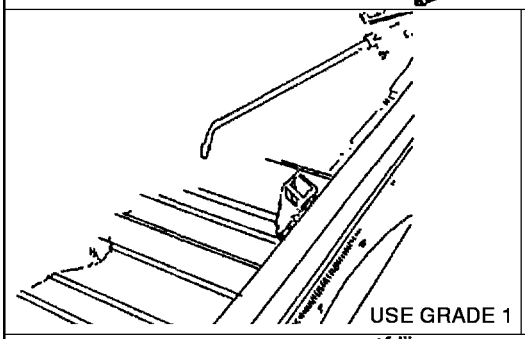

REAR TRUNK FLOOR AND PANEL ASSEMBLY, ALL BOXED-IN OR DOUBLE PANELED AREAS AND SEAMS, INCLUDING AREA OF DECK LID PLUS REAR GRAVEL SHIELD, FENDER SKIRT WELLS, UNDERSIDE OF FENDER. SOME VEHICLES MAY HAVE A SPARE TIRE MOUNTED IN THIS AREA. BE SURE TO REMOVE TIRE BEFORE TREATING THIS AREA. TREAT THE REAR FENDERS IN THE SAME MANNER AS THE FRONT. ACCESS TO PART OF THE REAR FENDERS MAY BE POSSIBLE THROUGH THE TRUNK WHEN THE VEHICLE IS ON THE FLOOR. BE SURE TO COAT THE FENDER BEAD.

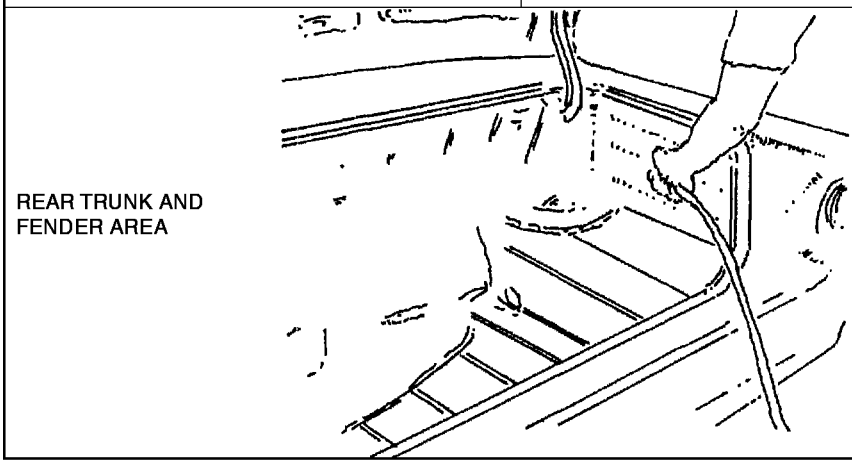

PN-TO36-1-191-082

Figure 6-1. Commercial General Purpose Vehicles (Areas of Application) (Sheet 5)

AREA	APPLICATION
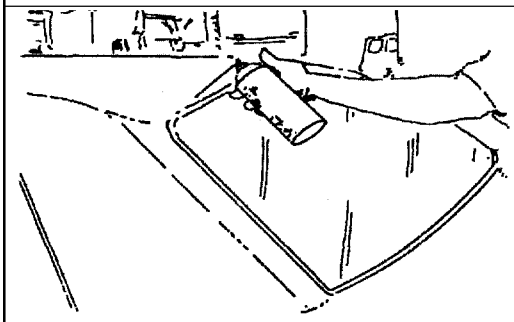 USE GRADE 2 BODY JOINTS, SEAMS AND CHROME MOULDINGS	ALL JOINTS, SEAMS AND MOULDINGS. AROUND WINDOWS AND WINDOW TRIM. 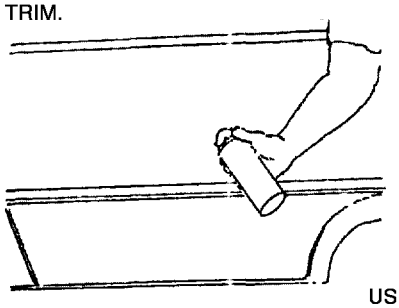 USE GRADE 2
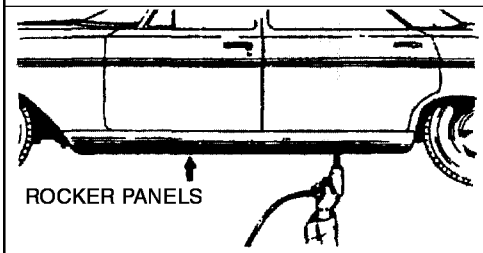 ROCKER PANELS PROPER DRILLING LOCATIONS IN ROCKER PANEL 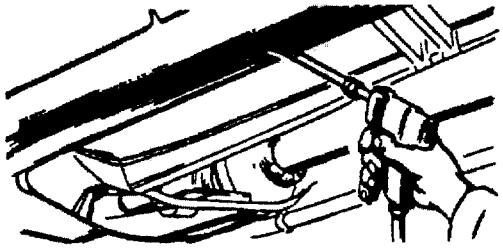 COATING INSIDE OF ROCKER PANEL	ALL INNER AREAS AND BOXED-IN SECTIONS, COMPLETE. SOME VEHICLES WILL HAVE ACCESS HOLES AT EACH END. REMOVE PLUGS AND INSERT LONG STRAIGHT WAND AS FAR AS IT WILL GO. SPRAY CONTINUOUSLY AS WAND IS WITHDRAWN. REPLACE PLUGS. FOR VEHICLES WITH OPENINGS IN THE BOTTOM OF ROCKER PANELS ENLARGE THE OPENING WITH A DRIFT, INSERT SHORT CURVED WAND AND SPRAY IN THE SAME MANNER. IF ACCESS CANNOT BE GAINED BY EITHER OF THE ABOVE METHODS, A 1/2 INCH HOLE SHOULD BE DRILLED IN THE BOTTOM OF THE PANELS AND THE AREA TREATED WITH A SHORT CURVED WAND. CAUTION CENTER PUNCH BEFORE USING ELECTRIC DRILL. CHECK DRAIN HOLES WHEN COMPLETED TO BE SURE THEY ARE OPEN.
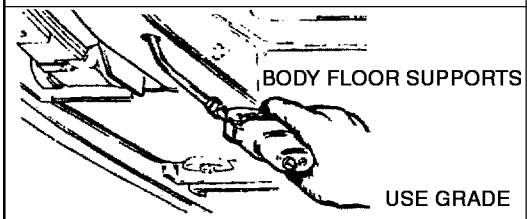 BODY FLOOR SUPPORTS USE GRADE INSERT GUN INTO BOXED CHANNELS UNDER FLO	ALL UNDERSIDE BODY FLOOR SUPPORTS, ENCLOSED AND BOXED IN SECTIONS, AS WELL AS EXPOSED AREAS.
FRAME	ALL EXTERIOR EXPOSED AREAS ON UNITIZED CONSTRUCTION, ALL BOXED-IN AND INTERIOR SECTIONS AS WELL. USE GRADE 1.

PN-TO36-1-191-083

Figure 6-1. Commercial General Purpose Vehicles (Areas of Application) (Sheet 6)

AREA	APPLICATION
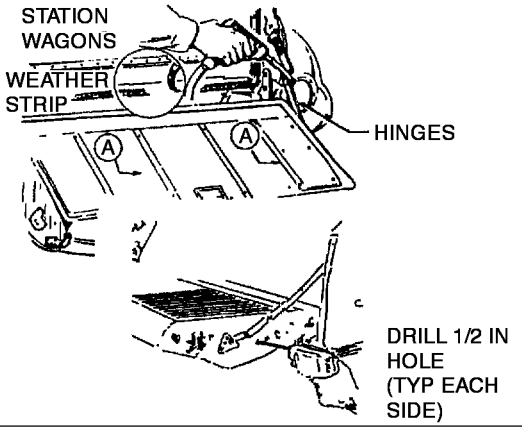	STATION WAGON TAIL GATES, INSIDE OF OUTER AND BOTTOM PANEL AT LEAST UP TO AND INCLUDING 16 INCHES FROM BOTTOM. IF HOLES ARE NOT AVAILABLE, DRILL A 1/2 INCH HOLE IN EACH SIDE OF TAIL GATE SIX TO EIGHT INCHES FROM BOTTOM. **NOTE** REMOVE INSIDE PANEL "A" OR DRILL 1/2 IN SIDE HOLES AND SPRAY REMOVE WEATHERSTRIP AND SPRAY THIS AREA, SPRAY HINGES. (USE GRADE 1)
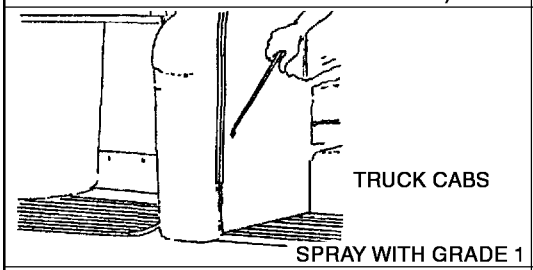	FLOOR OF CAB, KICK PAD AREA, CORNER AREA BEHIND SEATS, CAVITY AREA THROUGH DOOR HINGE HOLES OR DRILL 1/2 INCH HOLE FROM UNDERNEATH. INTERIOR OF ROOF, UNLESS COATING IS NOT DESIRABLE BECAUSE OF FELT OR PLASTIC LINING.
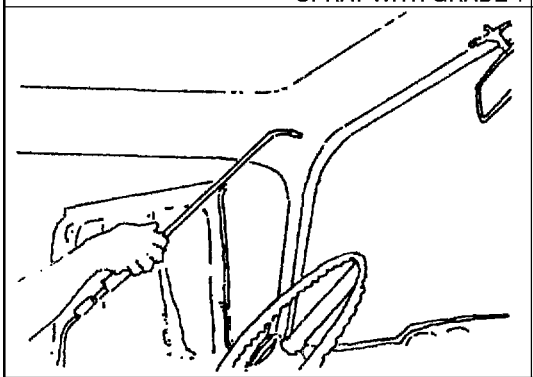	

PN-TO36-1-191-084

Figure 6-1. Commercial General Purpose Vehicles (Areas of Application) (Sheet 7)

AREA	APPLICATION
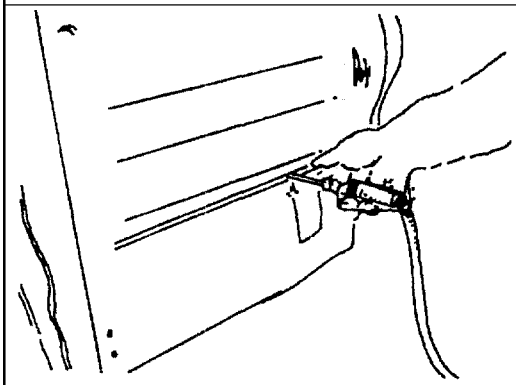 TRUCK DOORS	MANY WILL HAVE A REMOVABLE METAL ACCESS PLATE IN THE INNER PANEL, VEHICLE CORROSION PREVENTIVE CAN BE SPRAYED INSIDE THE DOOR AND NO HOLES NEED TO BE DRILLED. BE SURE THE METAL ACCESS PLATE IS SEALED WHEN REINSTALLED TO PREVENT RAIN FROM LEAKING THROUGH THE DOOR. COMPOUND SHALL BE SPRAYED INTO THE LOWER PORTION OF REAR DOORS. IF HOLES ARE NOT AVAILABLE, DRILL A 1/2 INCH HOLE IN EACH VERTICAL EDGE OF THE DOOR AND COAT THE LOWER PORTION. 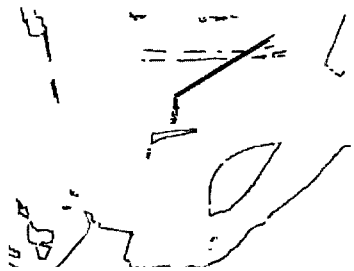 USE GRADE 1
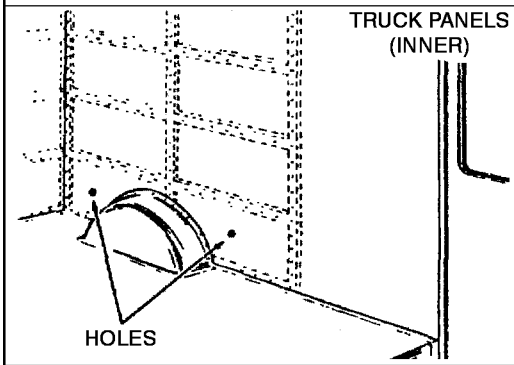	(SEPARATING THE CARGO COMPARTMENT FROM THE OUTSIDE OF THE TRUCK.) IF THE INNER PANELS DO NOT EXTEND TO THE FULL HEIGHT OF THE BODY, THE COMPOUND CAN BE SPRAYED FROM THE TOP EDGE DOWNWARD. IN SOME CASES 1/2 INCH HOLES WILL NEED TO BE DRILLED SIX TO EIGHT INCHES FROM THE BOTTOM IN THE INNER PANEL BETWEEN ALL THE VERTICAL BRACES. INSERT A SHORT CURVED WAND AND SPRAY THE LOWER PORTION OF THIS AREA. RIVET HEADS OUTLINE CLOSED AREAS BETWEEN INNER AND OUTER PANELS.
TRUCK BODIES	ALL ENCLOSED, BOXED-IN AND DOUBLE PANELED AREAS, INCLUDING DOORS, GATES AND BODY FLOOR.
TRUCK BODY SKIRTS	SPRAY THIS AREA FROM UNDERNEATH. EXAMINE THIS AREA FOR HOLLOW SECTIONS WHICH NEED TO BE COATED INSIDE, IN CASE OF VEHICLES HAVING THE SPARE TIRE MOUNTED IN THIS AREA, BE SURE TO REMOVE TIRE BEFORE SPRAYING THE AREA. REMOVE ANY COMPOUND THAT MAY COME IN CONTACT WITH THE TIRE.

PN -TO36-1-191-085

Figure 6-1. Commercial General Purpose Vehicles (Areas of Application) (Sheet 8)

AREA	APPLICATION
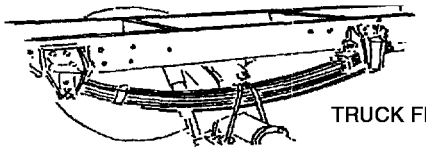 TRUCK FRAMES SPRAY FRAME AND SPRINGS WITH GRADE 1	COMPLETE FRAME, INCLUDING INSIDE ALL OF BOXED-IN AND EXPOSED EXTERIOR SURFACES, SPRINGS, BRACKETS, RUNNING GEAR AND WHEEL RIMS.
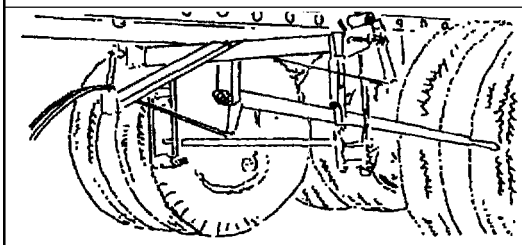 SPRAY ALL METAL UNDERNEATH WITH GRADE 1	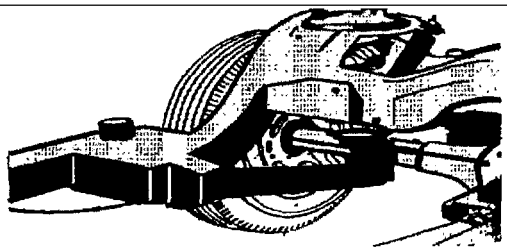 SPRAY FRAME, WHEEL RIMS, LUGS AND RUNNING GEAR WITH GRADE 1
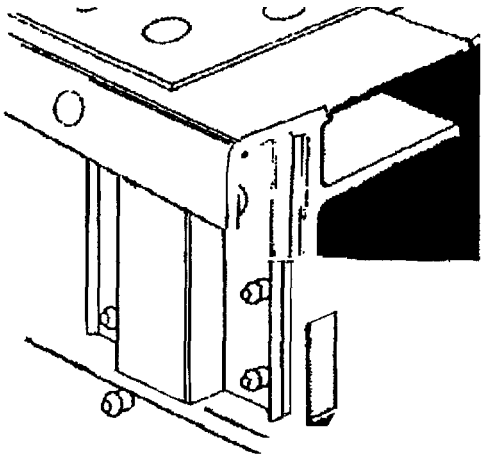	SPRAY ALL BOXED-IN AREAS WITH GRADE 1. DRILL 1/2 IN HOLES WHERE ENTRANCE IS NECESSARY AND USE FLEX HOSE EXTENSION WHERE DEEP CAVITY PROTECTION IS DESIRABLE. 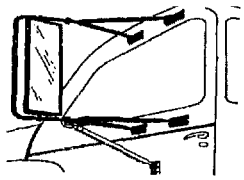 SPRAY WEST COAST MIRRORS WITH GRADE 3
SPECIAL TRUCKS AND TRUCK MOUNTED EQUIPMENT	AS REQUIRED IN ACCORDANCE WITH THE FOLLOWING INDIVIDUAL INSTRUCTION SHEETS.

PN-TO36-1-191-086

Figure 6-1. Commercial General Purpose Vehicles (Areas of Application) (Sheet 9)

EXTERIOR

A LIGHT LOAD OF GRADE 2 MAYBE SPRAYED ON COMPLETE EXTERIOR SURFACES OF VEHICLE. WIPE OFF EXCESS IF FILM THICKNESS TOO HEAVY FOR PERSONNEL CONTACT AREAS.

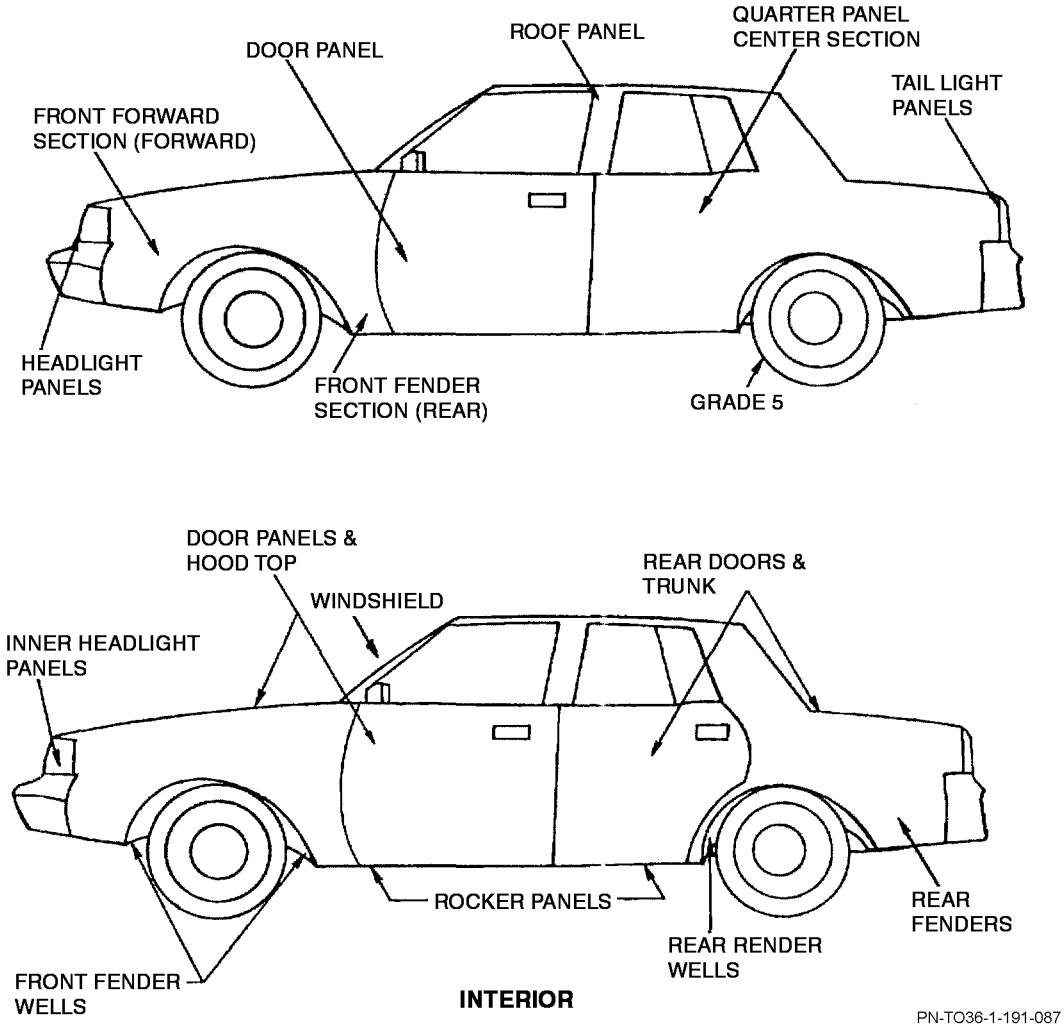

Figure 6-1. Commercial General Purpose Vehicles (Areas of Application) (Sheet 10)

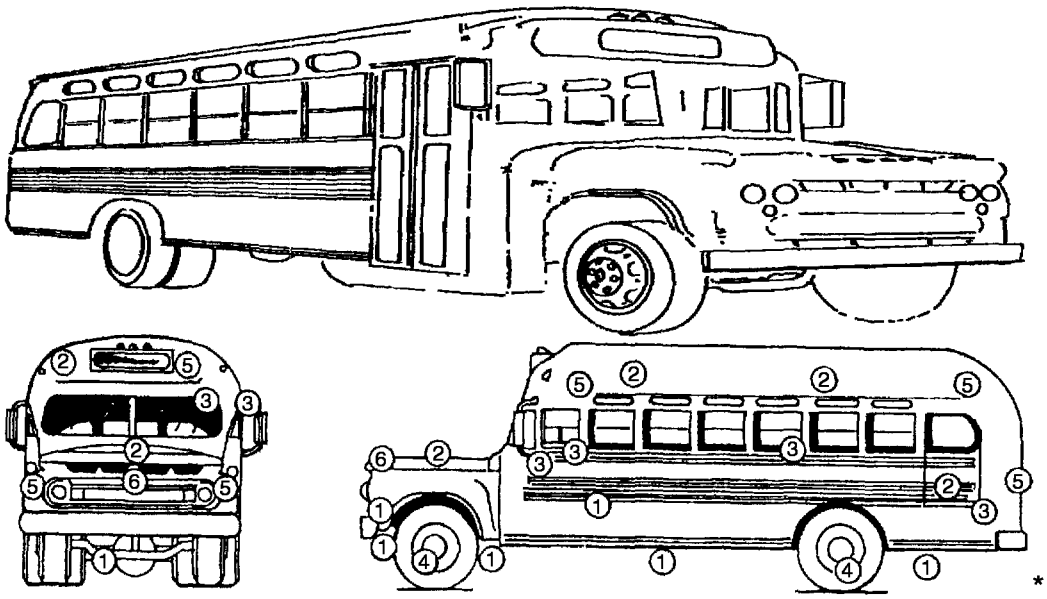

1- USE GRADE 1 - COAT ALL METAL UNDERNEATH VEHICLE, SPRINGS, RUNNING GEARS, FENDER WELLS AND ALL BOXED IN AREAS. IF INNER PANELS CAN'T BE REACHED FROM UNDERSIDE OF VEHICLE, REMOVE PANELS FROM INSIDE OR DRILL 1/2 IN HOLES FOR SPRAY NOZZLE INSERTION.

2- USE GRADE 1 - COAT ENTIRE INSIDE ROOF AREA, REMOVE HEADLINER OR DRILL 1/2 IN HOLES IF NECESSARY TO REACH THESE AREAS. COAT INSIDE ALL DOORS, UNDERNEATH HOOD AND HOOD EDGE, ALL AREA SURROUNDING MOTOR, BATTERY BOX AND TERMINALS. RAISE FLOOR MAT AND SPRAY ALL FLOOR AREA.

3- USE GRADE 2 - COAT ALL AREAS AROUND WINDOW SEAMS, HINGES AND MIRROR BRACKETS. COAT ALL EXTERNAL METAL TO METAL JOINTS AND ENTIRE OUTER SURFACE. IF FILM COATING APPEARS TO BE TOO HEAVY WIPE OR POLISH WITH A CLEAN CLOTH.

4- USE GRADE 2 - COAT ALL WHEELS BOTH SIDES, LUGS AND RIMS.

5- USE GRADE 4 - FOR ALL ELECTRICAL SYSTEMS -DASH PANEL, LIGHT SOCKETS, SPARK PLUGS DISTRIBUTOR, GENERATOR, ETC.

6- USE GRADE 3 - FOR RADIATOR ELECTROLYSIS CONTROL - APPLY FIRST COAT OF GRADE 3 TO BOTH EXTERNAL SURFACES OF RADIATOR CORE, FOLLOW THE SAME PROCEDURE WITH THE SECOND COAT OF GRADE 3.

NOTE

* REFERENCE NUMERICAL LEGEND

PN-TO36-1-191-088

Figure 6-1. Commercial General Purpose Vehicles (Areas of Application) (Sheet 11)

AREA	APPLICATION
MISCELLANEOUS	ANY AREA WHICH HAS NOT BEEN SPECIFICALLY MENTIONED ABOVE BUT IS DISCOVERED TO BE PART OF AN AREA REQUIRING TREATMENT IS TO BE ADEQUATELY COVERED.
OVERSPRAY CLEAN-UP	**WARNING** CLEANING MATERIALS MAY BE TOXIC TO EYES, SKIN AND RESPIRATORY TRACT. EYE AND SKIN PROTECTION REQUIRED. USE ONLY IN A WELL VENTILATED AREA.

PN-TO36-1-191-089

Figure 6-1. Commercial General Purpose Vehicles (Areas of Application) (Sheet 12)

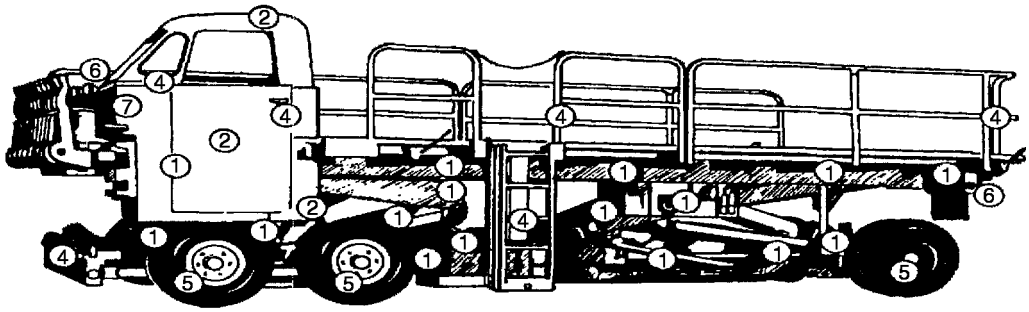

AREAS TO BE RUST PROOFED:
PLATFORM AND RAMP CONVEYORS
RADIATOR (EXTERIOR)
WINCH
CAB AREA: DOORS, HINGES, FLOOR - BOTH SIDES
BATTERY BOX
PLATFORM - UNDERSIDE, INCLUDING CHAINS
LAMPS
LADDER
ELECTRICAL CONNECTIONS
WHEEL RIMS
SUSPENSION, PLATFORM AND CHASSIS LINKAGE
CONNECTING POINTS
BEHIND INSTRUMENT PANEL

*1- USE GRADE 1 - COAT ALL METAL UNDERNEATH OF VEHICLE, RUNNING GEAR, FRAME, SPRINGS, BRAKE RODS, STEERING MECHANISM, ETC.

2- USE GRADE 1 - COAT EXTERIOR OF ROOF CAB, CAB CORNERS AND BEHIND SEAT AREAS. LIFT FLOOR MAT AND COAT ENTIRE FLOOR AREA. REMOVE PANEL AND COAT ENTIRE INSIDE OF DOOR, INCLUDING DOOR MECHANISM; COAT HINGE BOXES.

3- USE GRADE 1 - COAT BATTERY BOX AND TERMINALS, ALL AREAS AROUND MOTOR.

4- USE GRADE 2 - COAT ALL SEAMS AROUND WINDOW AREAS, HINGES AND ALL EXTERIOR METAL TO METAL JOINTS, LADDER PIPE RAIL WELDS, ETC. SPRAY LIGHT COAT OVER ENTIRE EXTERIOR VEHICLE. IF FILM THICKNESS IS TOO HEAVY AND SUBJECTED TO PERSONAL CONTACT, REMOVE EXCESS BY RUBBING AND/OR POLISHING WITH A CLEAN CLOTH.

5- USE GRADE 2 - SPRAY BOTH SIDES OF WHEELS, RIMS AND LUGS.

6- USE GRADE 4 - SPRAY ENTIRE ELECTRICAL SYSTEMS, INSTRUMENT PANEL, LIGHT SOCKETS, GENERATOR, ETC.

7- USE GRADE 3 - SPRAY EXTERIOR CORE BOTH SIDES FIRST COAT WITH GRADE 3. REPEAT SCHEDULE WITH SECOND COAT OF GRADE 3.

NOTE

* REFERENCE NUMERICAL LEGEND

PN-TO36-1-191-090

Figure 6-2. Special Purpose Vehicles (Full Tracked Tractors) (Sheet 1 of 13)

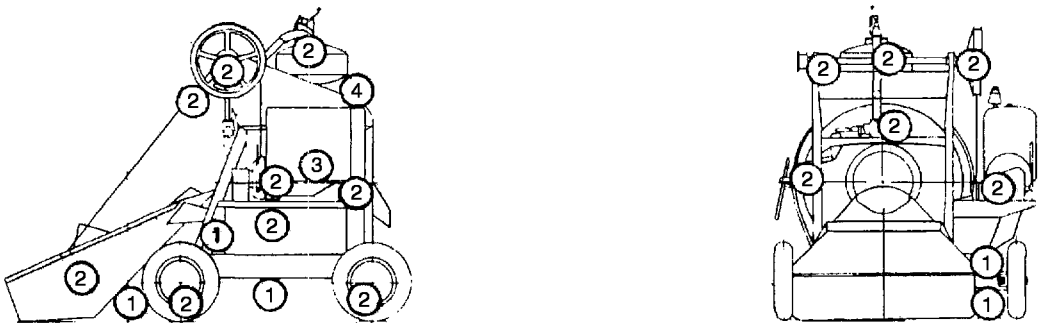

*

1- USE GRADE 1 - SPRAY ALL METAL AREAS UNDERNEATH MIXER AND SPRAY ALL CLOSED IN AREAS.

2- USE GRADE 2 - SPRAY ALL EXTERIOR METAL, PULLEYS, CABLES, EXTERIOR RUNNING GEAR, ETC. WIPE OFF EXCESS MATERIAL WITH CLEAN CLOTH IF NECESSARY. SPRAY BOTH SIDES OF WHEELS, RIMS AND LUGS.

3- USE GRADE 4 - SPRAY COMPLETE ELECTRICAL SYSTEM, SPARK PLUGS, COIL, DISTRIBUTOR, GENERATOR, IGNITION SYSTEM, ETC.

4- USE GRADE 3 - CONTROL RADIATOR ELECTROLYSIS - SPRAY EXTERIOR SURFACE BOTH SIDES OF RADIATOR CORE WITH A FIRST COAT OF GRADE 3. REPEAT SCHEDULE AND SPRAY SECOND COAT WITH GRADE 3.

NOTE

* REFERENCE NUMERICAL LEGEND

PN-TO36-1-191-091

Figure 6-2. Special Purpose Vehicles (Full Tracked Tractors) (Sheet 2)

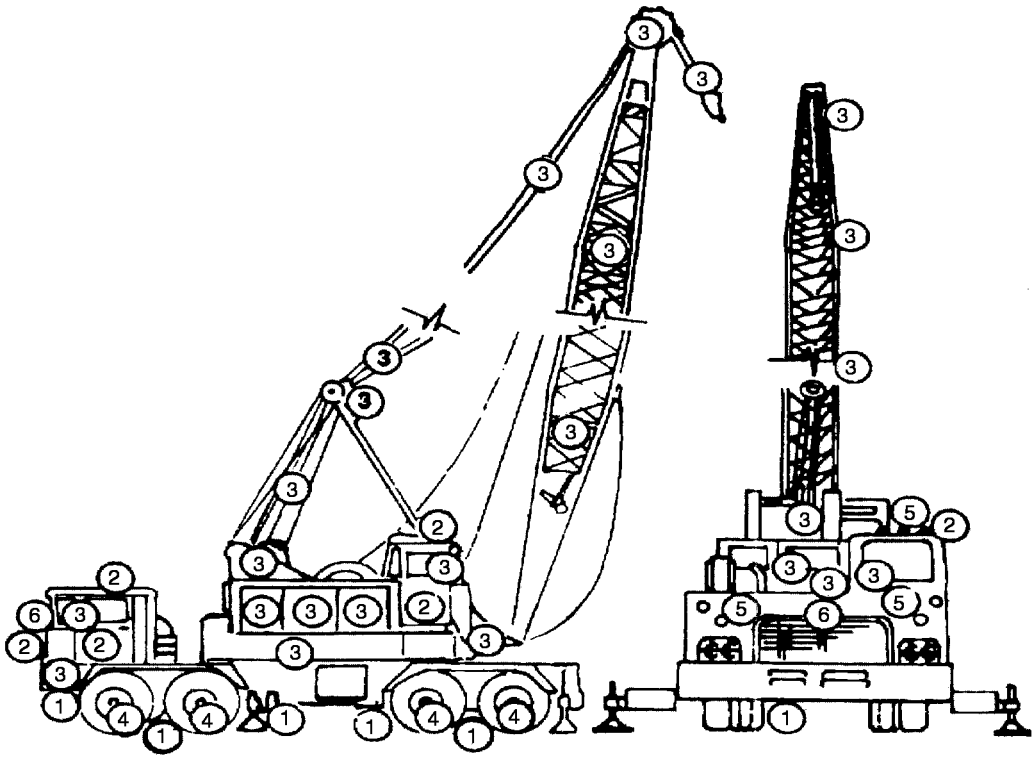

*

1- USE GRADE 1 - SPRAY ALL METAL UNDERNEATH CRANE, RUNNING GEARS, SPRINGS, UNDERNEATH FENDERS AND ALL BOXED IN AREAS.

2- USE GRADE 1 - SPRAY INTERIOR OF DOORS, HINGES AND HINGE BOXES, INSIDE OF CAB ROOF. LIFT MAT AND SPRAY CAB FLOOR. SPRAY ALL INSIDE AREAS OF MOTOR HOOD AND ALL SURROUNDING AREAS AROUND MOTOR. SPRAY BATTERY BOX AND TERMINALS.

3- USE GRADE 2 - SPRAY AROUND ALL WINDOW SEAMS, SPRAY ALL CABLES, PULLEYS, SPRAY ALL EXTERIOR METAL SURFACES. IF FILM THICKNESS IS TOO HEAVY IN UNDESIRED AREAS, WIPE OR POLISH EXCESS MATERIAL WITH A CLEAN CLOTH. SPRAY ALL PIANO HINGES AND DOOR CATCHES. SPRAY ALL INNER COMPARTMENTS.

4- USE GRADE 2 - SPRAY BOTH SIDES OF ALL WHEELS, RIMS AND LUGS.

5- USE GRADE 4 - SPRAY COMPLETE ELECTRICAL SYSTEM, LIGHT SOCKETS, SPARK PLUGS, DISTRIBUTER, COIL, GENERATOR, IGNITION, ETC.

6- USE GRADE 3 - TO CONTROL RADIATOR ELECTROLYSIS - SPRAY BOTH EXTERIOR SIDES OF RADIATOR CORE. SPRAY FIRST COAT WITH GRADE 3. REPEAT SCHEDULE AND SPRAY SECOND COAT WITH GRADE 3.

NOTE

* REFERENCE NUMERICAL LEGEND

PN-TO36-1-191-092

Figure 6-2. Special Purpose Vehicles (Full Tracked Tractors) (Sheet 3)

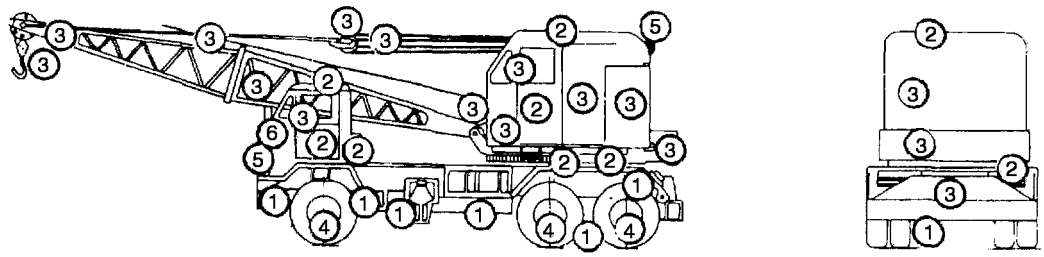

*

1- USE GRADE 1 - SPRAY ALL METAL UNDERNEATH, INCLUDING FRAME, RUNNING GEAR, CHASSIS, SPRINGS, UNDER FENDERS, AND BOXED IN AREAS.

2- USE GRADE 1 - SPRAY CAB INSIDE, CAB DOORS, HINGES AND HINGE BOXES, CAB ROOF AND ALL AREAS AROUND AND UNDERNEATH REVOLVING CAB. SPRAY ALL AREAS AROUND MOTOR, BATTERY BOX AND TERMINALS.

3- USE GRADE 2 - SPRAY ALL METAL TO METAL SURFACE JOINTS, CABLE, PULLEYS, ALL SEAMS AROUND WINDOWS, CAB FLOOR AND AREA AROUND GEAR MECHANISM IN CRANE CAB. SPRAY LIGHT FILM OVER ENTIRE EXTERIOR, IF FILM THICKNESS IS TOO HEAVY WIPE OR POLISH EXCESS OFF WITH A CLEAN CLOTH. SPRAY ALL INNER COMPARTMENTS.

4- USE GRADE 2 - SPRAY BOTH SIDES OF ALL WHEELS, LUGS AND RIMS.

5- USE GRADE 4 - SPRAY COMPLETE ELECTRICAL SYSTEM, LIGHT SOCKETS, SPARK PLUGS, DISTRIBUTOR, COIL, GENERATOR, INSTRUMENT PANEL, ETC.

6- USE GRADE 3 - VEHICLE RADIATOR ELECTROLYSIS CONTROL - SPRAY BOTH EXTERIOR SIDES OF RADIATOR WITH A FIRST COAT OF GRADE 3. REPEAT THIS SCHEDULE WITH A SECOND COAT OF GRADE 3.

NOTE

* REFERENCE NUMERICAL LEGEND

PN-TO36-1-191-093

Figure 6-2. Special Purpose Vehicles (Full Tracked Tractors) (Sheet 4)

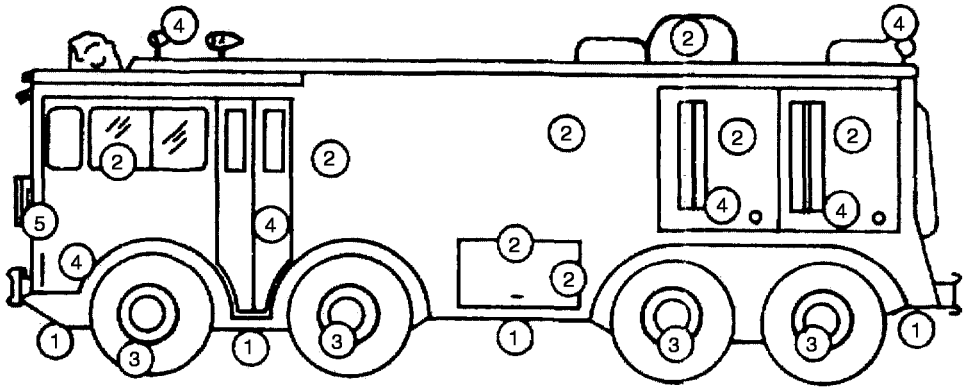

*

1- USE GRADE 1 - SPRAY UNDERNEATH OF VEHICLE ALL METAL, RUNNING GEAR, SPRINGS, ALL BOXED IN AREAS.

2- USE GRADE 2 - SPRAY ALL AREAS AROUND WINDOW SEAMS, SIDE DOOR HINGES, INNER COMPARTMENTS, AND ALL METAL TO METAL JOINTS. SPRAY LIGHT COATING OVER ENTIRE EXTERIOR SURFACE. IF FILM IS TOO HEAVY, WIPE OR POLISH WITH CLEAN CLOTH.

3- USE GRADE 2 - SPRAY ALL WHEELS, BOTH SIDES, RIMS, LUGS.

4- USE GRADE 4 - SPRAY COMPLETE ELECTRICAL SYSTEM, DASH PANEL, LIGHT SOCKETS, SWITCHES, SPARK PLUGS, DISTRIBUTOR, GENERATOR, ELECTRIC MOTORS, ETC.

5- USE GRADE 3 - FOR VEHICLE RADIATOR ELECTROLYSIS CONTROL - SPRAY BOTH SIDES OF EXTERIOR RADIATOR CORE WITH 1 COAT GRADE 3. THEN FOLLOW SAME PROCEDURE WITH SECOND COAT OF GRADE 3.

NOTE

* REFERENCE NUMERICAL LEGEND

PN-TO36-1-191-094

Figure 6-2. Special Purpose Vehicles (Full Tracked Tractors) (Sheet 5)

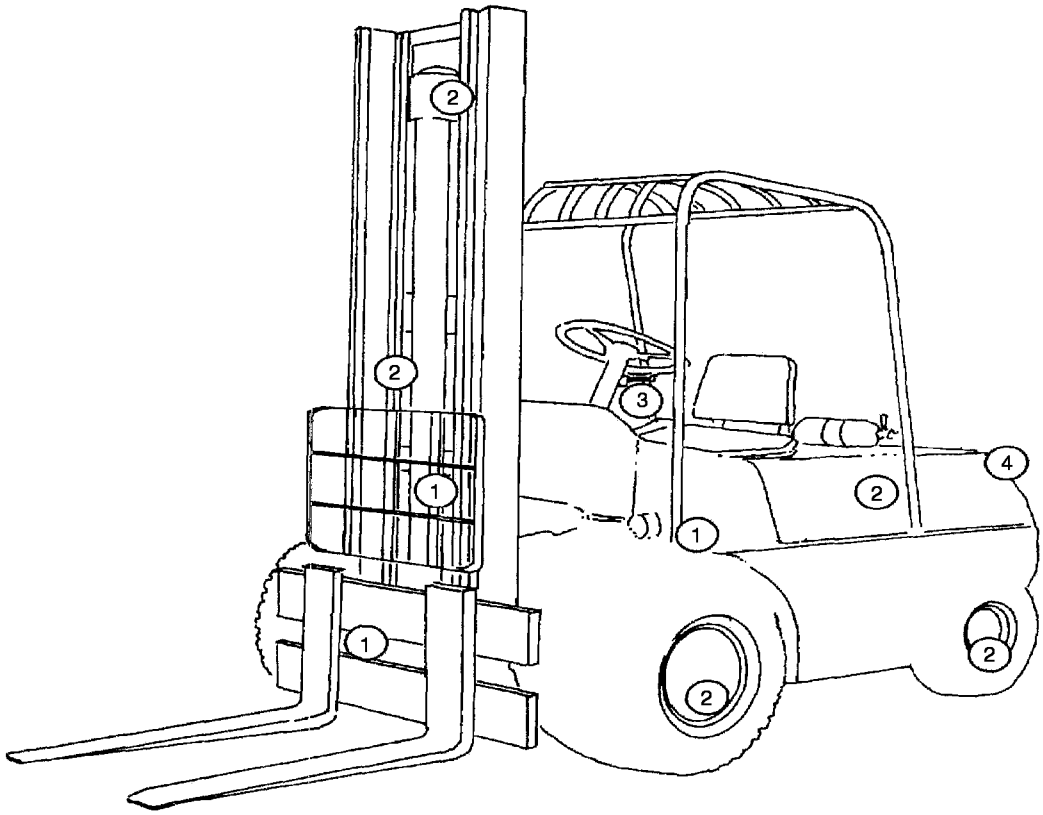

*

1- USE GRADE 1 - IN ALL AREAS UNDERNEATH OF FORKLIFT, ALL CLOSED IN AND BOXED IN AREAS. SPRAY BATTERY BOX AND TERMINALS.

2- USE GRADE 2 - ON HOIST CHAIN, SPROCKETS AND MAST ROLLERS, HOSE REELS AND ON ALL SURFACE METAL TO METAL JOINTS. SPRAY LIGHT FILM OVER ENTIRE EXTERIOR SURFACE. IF FILM THICKNESS IS TOO HEAVY, WIPE OR POLISH WITH A CLEAN CLOTH. SPRAY BOTH SIDES OF ALL WHEELS, RIMS AND LUGS. SPRAY EXTERIOR SURFACE OF FLOOR PLATES.

3- USE GRADE 4 - SPRAY ON COMPLETE ELECTRICAL SYSTEM, LIGHT SOCKETS, IGNITION, SWITCHES, ETC.

4- USE GRADE 3 - TO CONTROL RADIATOR ELECTROLYSIS - SPRAY FIRST COAT WITH GRADE 3 ON BOTH EXTERNAL SIDES OF RADIATOR CORE. REPEAT SCHEDULE FOR SECOND COAT USING GRADE 3.

NOTE

* REFERENCE NUMERICAL LEGEND

PN-TO36-1-191-095

Figure 6-2. Special Purpose Vehicles (Full Tracked Tractors) (Sheet 6)

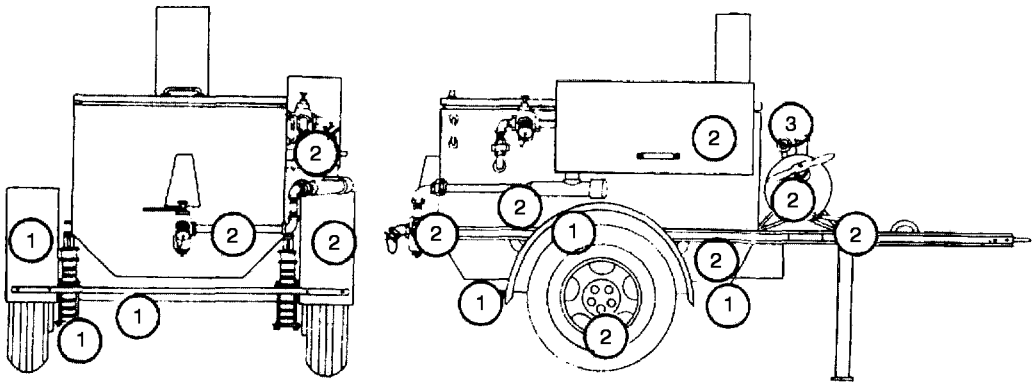

*

1- USE GRADE 1 - SPRAY ALL METAL UNDERNEATH TRAILER AND FENDERS. SPRAY SPRINGS.

2- USE GRADE 2 - SPRAY SURFACE AREAS AND WIPE OFF EXCESS IF NEEDED WITH A CLEAN CLOTH. COAT BOTH SIDES OF WHEELS, RIMS, LUGS.

3- USE GRADE 4 - SPRAY ALL GAUGES.

NOTE

* REFERENCE NUMERICAL LEGEND

PN-TO36-1-191-096

Figure 6-2. Special Purpose Vehicles (Full Tracked Tractors) (Sheet 7)

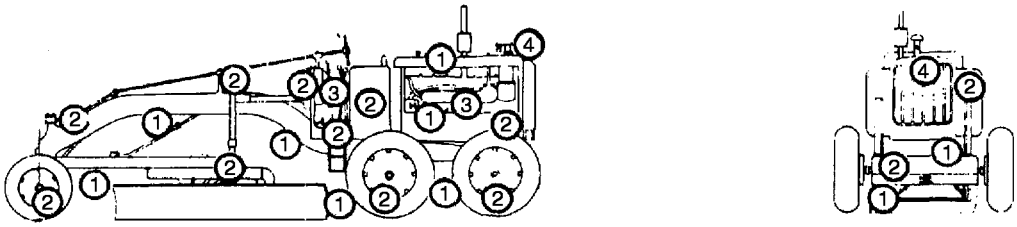

*

1- USE GRADE 1 - SPRAY ALL METAL UNDERNEATH GRADER, UNDERNEATH BEAM, AND MOTOR HOOD, SPRAY BATTERY BOX AND TERMINALS; ALL AREAS AROUND MOTOR.

2- USE GRADE 2 - SPRAY BOTH SIDES OF WHEELS, RIMS, LUGS. SPRAY ALL SURFACE METAL, IF FILM THICKNESS IS TOO HEAVY IN AREAS SUBJECTED TO PERSONAL CONTACT, WIPE OR POLISH EXCESS MATERIAL WITH A CLEAN CLOTH. SPRAY CAB FLOORS AND ALL EXPOSED WORKING GEARS.

3- USE GRADE 4 - SPRAY COMPLETE ELECTRICAL SYSTEM, IGNITION, INSTRUMENT PANEL, SPARK PLUGS, DISTRIBUTOR, COIL, GENERATOR, ETC.

4- USE GRADE 3 - TO CONTROL RADIATOR ELECTROLYSIS IN EQUIPMENT - SPRAY BOTH EXTERNAL SIDES OF RADIATOR CORE WITH FIRST COAT OF GRADE 3. REPEAT SCHEDULE WITH SECOND COAT OF GRADE 3.

NOTE

* REFERENCE NUMERICAL LEGEND

PN-TO36-1-191-097

Figure 6-2. Special Purpose Vehicles (Full Tracked Tractors) (Sheet 8)

AREA APPLICATION

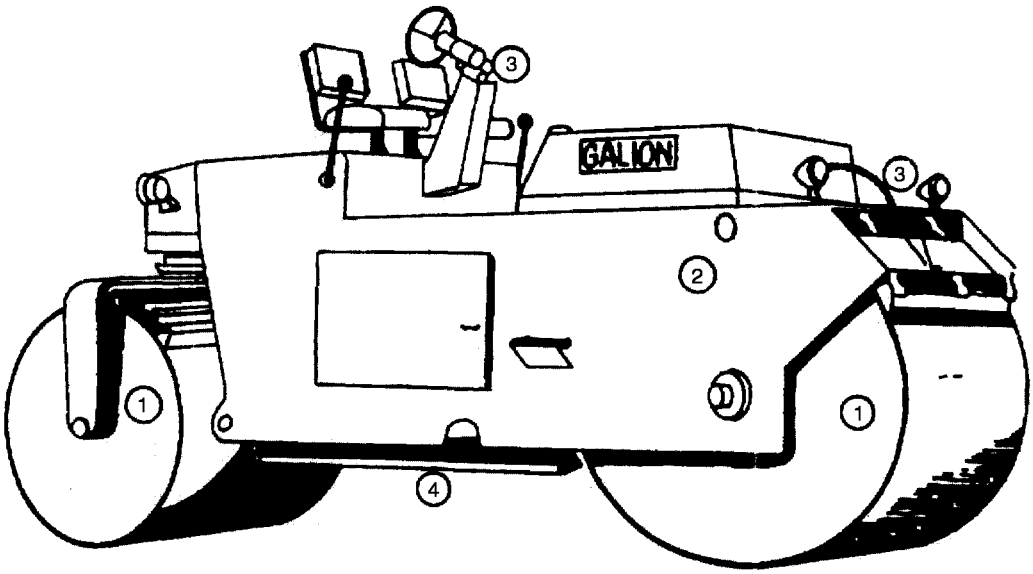

*

1- USE GRADE 1 - SPRAY ALL METAL UNDERNEATH ROLLER. SPRAY ALL AREAS INSIDE MOTOR HOOD COMPARTMENT AND ALL AREAS AROUND MOTOR. SPRAY BATTERY BOX AND TERMINALS. SPRAY UNDERSIDE CAB ROOF.

2- USE GRADE 2 - SPRAY HUBS AND INSIDE OF WHEELS. SPRAY ALL EXTERIOR METAL SURFACES AND CAB FLOOR. IF FILM THICKNESS IS TOO HEAVY, SUBJECT TO PERSONAL CONTACT, WIPE OR POLISH EXCESS MATERIAL WITH CLEAN CLOTH.

3- USE GRADE 4 - SPRAY COMPLETE ELECTRICAL SYSTEM, SPARK PLUGS, DISTRIBUTOR, GENERATOR, COIL, IGNITION SYSTEM, ETC.

4- USE GRADE 3 - FOR CONTROL OF RADIATOR ELECTROLYSIS - SPRAY BOTH SIDES OF EXTERIOR RADIATOR CORE WITH A FIRST COAT OF GRADE 3. REPEAT SCHEDULE WITH A SECOND COAT OF GRADE 3.

NOTE

* REFERENCE NUMERICAL LEGEND

PN-TO36-1-191-098

Figure 6-2. Special Purpose Vehicles (Full Tracked Tractors) (Sheet 9)

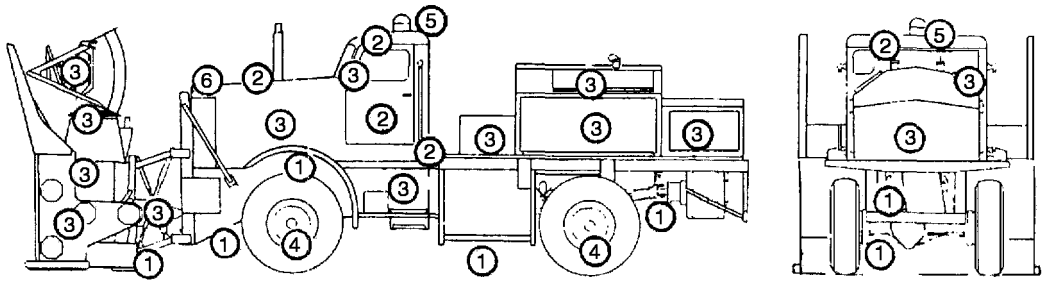

*

1- USE GRADE 1 - SPRAY ALL METAL UNDERNEATH VEHICLE, UNDER FENDERS, RUNNING GEAR, SPRINGS AND ALL BOXED IN AREAS.

2- USE GRADE 1 - SPRAY INSIDE DOORS, HINGES, HINGE BOXES, REMOVE HEADLINER AND SPRAY INSIDE ROOF AREA, LIFT FLOOR MAT AND SPRAY COMPLETE FLOOR. SPRAY INSIDE HOOD AND ALL AREA AROUND MOTOR AND GRILL, BATTERY BOX AND TERMINALS.

3- USE GRADE 2 - SPRAY ALL EXTERIOR SURFACE METAL TO METAL JOINTS AROUND ALL WINDOW SEAMS, BEHIND ALL CHROME AND SIDE MIRROR AREAS. SPRAY INSIDE ALL COMPARTMENTS AND PIANO HINGES. SPRAY FILM OVER ENTIRE EXTERIOR METAL SURFACE. IF FILM THICKNESS IS TOO HEAVY, IN AREAS OF DIRECT PERSONAL CONTACT, WIPE OR POLISH WITH A CLEAN CLOTH. SPRAY ALL EXTERIOR ROTATING GEARS.

4- USE GRADE 2 - SPRAY BOTH SIDES OF ALL WHEELS, RIMS AND LUGS.

5- USE GRADE 4 - SPRAY COMPLETE ELECTRICAL SYSTEM, LIGHT SOCKETS, SPARK PLUGS, DISTRIBUTOR, GENERATOR, COILS, LOCKS, ETC.

6- USE GRADE 3 - FOR VEHICLE RADIATOR ELECTROLYSIS CONTROL - SPRAY BOTH EXTERNAL SIDES OF RADIATOR CORE WITH FIRST COAT OF GRADE 3. REPEAT THIS SCHEDULE WITH SECOND COAT OF GRADE 3.

NOTE

* REFERENCE NUMERICAL LEGEND

PN-TO36-1-191-099

Figure 6-2. Special Purpose Vehicles (Full Tracked Tractors) (Sheet 10)

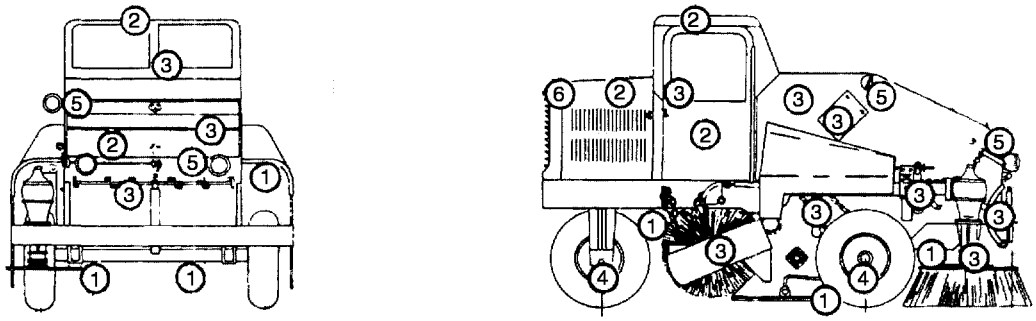

*

1- USE GRADE 1 - SPRAY ALL METAL UNDERNEATH SWEEPER, UNDER ALL FENDERS, SPRAY INTO ALL BOXED IN AREAS.

2- USE GRADE 1 - SPRAY INSIDE DOORS AND CAB CORNERS, HINGES AND HINGE BOXES. SPRAY INSIDE ALL CAB ROOF AREAS. SPRAY UNDER HOOD AND ALL AREA AROUND MOTOR. SPRAY BATTERY BOX AND TERMINALS.

3- USE GRADE 2 - SPRAY ALL EXTERIOR SURFACE METAL TO METAL JOINTS SPRAY AROUND ALL WINDOW SEAMS. SPRAY ALL AREAS AND GEARS ON AND AROUND ROTATING BRUSHES. SPRAY INTERIOR OF ALL COMPARTMENTS AND CAB FLOORS.

4- USE GRADE 2 - SPRAY BOTH SIDES OF ALL WHEELS, RIMS AND LUGS.

5- USE GRADE 4 - SPRAY COMPLETE ELECTRICAL SYSTEM, LIGHT SOCKETS, SPARK PLUGS, COILS, GENERATOR, DISTRIBUTOR, INSTRUMENT PANEL, ETC.

6- USE GRADE 3 - FOR VEHICLE RADIATOR ELECTROLYSIS CONTROL - SPRAY BOTH EXTERIOR SIDES OF RADIATOR CORE WITH A FIRST COAT OF GRADE 3. REPEAT THIS SCHEDULE WITH A SECOND COAT OF GRADE 3.

NOTE

* REFERENCE NUMERICAL LEGEND

PN-TO36-1-191-100

Figure 6-2. Special Purpose Vehicles (Full Tracked Tractors) (Sheet 11)

AREA APPLICATION

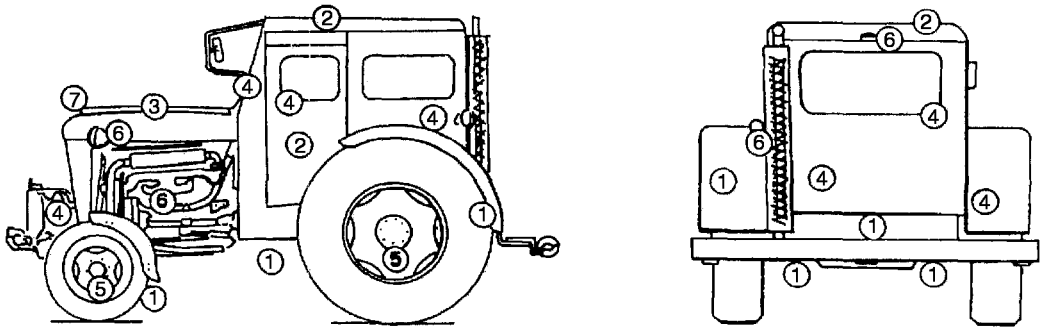

*

1- USE GRADE 1 - SPRAY ALL METAL UNDERNEATH VEHICLE, ALL RUNNING GEAR, SPRINGS, CLOSED AND BOXED IN AREAS, UNDER FENDERS.

2- USE GRADE 1 - SPRAY INSIDE DOORS, HINGES, HINGE BOXES, AND UNDERSIDE CAB ROOF.

3- USE GRADE 1 - SPRAY UNDER HOOD AND ALL AREAS AROUND MOTOR AND GRILL. SPRAY BATTERY BOX AND TERMINALS.

4- USE GRADE 2 - SPRAY AROUND ALL WINDOW SEAMS AND EXTERIOR METAL TO METAL JOINTS. SPRAY ALL EXTERIOR METAL SURFACES, IF FILM THICKNESS IS TOO HEAVY AND SUBJECTED TO PERSONAL CONTACT, WIPE OR POLISH EXCESS MATERIAL WITH A CLEAN CLOTH. SPRAY INSIDE OF CAB FLOOR IF METAL IS EXPOSED.

5- USE GRADE 2 - SPRAY BOTH SIDES OF ALL WHEELS, RIMS AND LUGS.

6- USE GRADE 4 - SPRAY COMPLETE ELECTRICAL SYSTEM, LIGHT SOCKETS, IGNITION, DISTRIBUTOR, GENERATOR, SPARK PLUGS, ETC.

7- USE GRADE 3 - TO CONTROL RADIATOR ELECTROLYSIS - SPRAY BOTH EXTERIOR SIDES OF RADIATOR CORE. SPRAY FIRST COAT WITH GRADE 3. REPEAT SCHEDULE AND SPRAY SECOND COAT WITH GRADE 3.

NOTE

* REFERENCE NUMERICAL LEGEND

PN-TO36-1-191-101

Figure 6-2. Special Purpose Vehicles (Full Tracked Tractors) (Sheet 12)

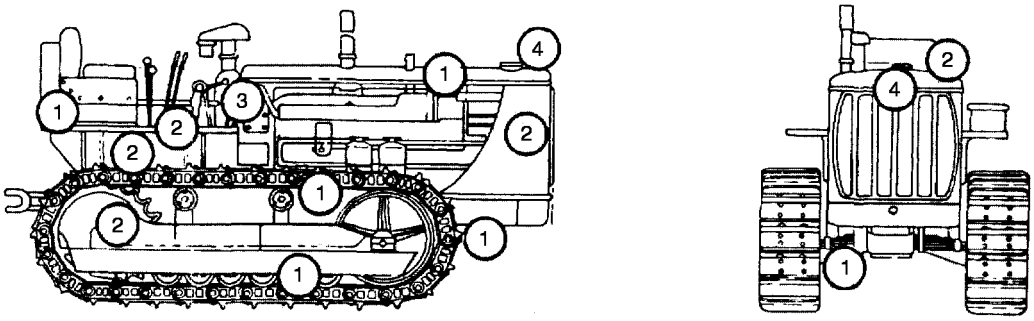

*

1- USE GRADE 1 - SPRAY ALL METAL UNDERNEATH TRACTOR, SPRINGS, RUNNING GEAR, ETC. SPRAY ALL ROLLERS ON TRACTOR CLEATS. SPRAY UNDER SURFACE OF MOTOR HOOD AND ALL AREAS AROUND MOTOR. SPRAY BATTERY BOX AND TERMINALS. COAT INNER AREA COMPARTMENT OF OPERATOR'S SEAT.

2- USE GRADE 2 - SPRAY ALL EXTERIOR SURFACES, METAL TO METAL JOINTS, ETC. IF FILM THICKNESS IS TOO HEAVY, SUBJECTED TO PERSONAL CONTACT, EXCESS CAN BE WIPED OR POLISHED WITH A CLEAN CLOTH. SPRAY ALL EXTERIOR RUNNING GEAR AND OPERATOR'S DECK.

3- USE GRADE 4 - SPRAY COMPLETE ELECTRICAL SYSTEM, SPARK PLUGS, DISTRIBUTOR, GENERATOR, COIL, IGNITION, INSTRUMENT PANEL, ETC.

4- USE GRADE 3 - TO CONTROL RADIATOR ELECTROLYSIS - SPRAY BOTH SIDES OF EXTERIOR RADIATOR CORE WITH A FIRST COAT OF GRADE 3. REPEAT SCHEDULE WITH SECOND COAT OF GRADE 3.

NOTE

* REFERENCE NUMERICAL LEGEND

PN-TO36-1-191-102

Figure 6-2. Special Purpose Vehicles (Full Tracked Tractors) (Sheet 13)

6.15 VEHICLE CLEANING AND CORROSION PROTECTION.

6.15.1 A well developed corrosion prevention and control program includes a scheduled cleaning program utilizing approved cleaning materials and processes as a key element in reducing the impact of corrosion. Use of untested or unauthorized cleaning materials may cause premature coating system failure and/or accelerated corrosion.

6.15.2 All operating locations fall in specific corrosion severity zones. The Air Force Corrosion Prevention and Control Office, (AFRL/MLS-OLR), has established the corrosion severity zones based on a number of factors including the available water quality, air quality, nearness to salt water, etc. The minimum wash cycles shown in Table 6-3 are based upon the corrosion severity zones listed in TO 1-1-691 and the wash cycles established in TO 36-1-131. Organizations may wash assigned equipment more often, if necessary, but not less. Should vehicles be temporarily assigned to very severe or severe corrosion prone locations, where cleaning is not practical or was deferred, the affected vehicles shall be cleaned, inspected, and lubricated within 15 days of returning to home station.

6.15.3 Cleaning is a broad term covering methods and materials needed to remove soils from a surface. Selection of an appropriate cleaning method in any given case depends on three important factors: (1) type and amount of soil, (2) base material composition and surface condition, and (3) degree of cleanliness required.

6.15.4 As it relates to equipment cleaning, the types of soils and the types of coatings on vehicles dictate the required effective cleaning compounds. Soils that collect on a surface may be placed in three classes:

6.15.4.1 Oily Soils. (Examples: hydraulic oil, lubricating oil, light oil, and oil base rust preventives). When present as a thin film or small residue, and when not very viscous in nature, these soils may be removed by alkaline cleaners. On

more stubborn areas, cleaning solvent, MIL-PRF-680A(1), Type II or III may be used. Usually, the longer a soil remains and the higher the temperature, the more difficult the soil is to remove.

6.15.4.2 Semi-Solid Soils. (Examples: thick oils, grease and heavy rust preventives). These soils are usually removed with alkaline cleaners. Heavy deposits of this type are usually best removed by using a solvent first and then applying an alkaline cleaner.

6.15.4.3 Soils Containing Solids. (Examples: mud, carbonized oils and corrosion products (scale). These soils are usually the most difficult to remove. Removal of these soils usually takes a combination of solvent soaking, alkaline pressure spray, and scrubbing (mechanical agitation and, in case of corrosion products, acid pickling or abrasive blasting). As mentioned before, aged soils increase difficulty of removal.

6.15.5 Types of Cleaners. Cleaners that are used in this technical manual may be placed in three types as follows:

6.15.5.1 Alkaline Cleaners. This type of cleaner removes a soil by displacement from the surface rather than by direct solution in the cleaner. After displacement the soil may be carried in the body of the cleaner as a suspension; it may separate, or in the case of fatty soils, it may react partially or completely with the cleaner to form water-soluble soap. Cleaners of this type usually have components that aid in lifting from a surface.

6.15.5.2 Solvent Cleaners. This type of cleaner removes a soil by dissolving the soil and usually leaves a thin film or residue of an oily nature. Removal of this oily film or residue is accomplished by using an alkaline cleaner.

6.15.5.3 Solvent Emulsion Cleaners. This type of cleaner removes a soil by emulsifying the oil constituent of the soil and holding it in suspension in water.

6.15.6 Use of Cleaners.

6.15.6.1 Material composition and surface condition affect the methods and materials to be used in cleaning. Certain nonferrous metals, such as zinc and aluminum, present special problems because heavy-duty alkaline or strong acid cleaners attack the metal. Roughness of surface tends to hold a soil, thereby making it harder to remove.

CAUTION

The use of unauthorized cleaning compounds, or the use of authorized cleaning compounds that are not properly mixed, may result in damage to the coating system or initiation of corrosion.

6.15.6.2 There are a number of authorized and tested cleaning compounds. Selection and use of unapproved cleaning compounds may cause damage to the components or painted surfaces. Each cleaner has specific uses and must be carefully applied to prevent personal injury or damage to equipment. Only use authorized cleaners that are listed on the qualified products listing (QPL) for a specific specification. A listing of the most current QPL for an authorized cleaning compound can be found on the Air Force Corrosion Prevention and Control office website https://afcpco.robins.af.mil.

6.15.6.3 MIL-PRF-85570D, Cleaning Compound Aircraft Exterior, Types I, IA II, III, IV, and V.

6.15.6.3.1 Type I is for general use on exterior surfaces, and is effective for use on heavy soils and grease. Type I contains solvents and should not be used in poorly ventilated areas or on lacquer painted surfaces.

6.15.6.3.2 Type IA is an aerosol used for spot cleaning on exterior surfaces. Do not use on lacquer surfaces, plastics or composite surfaces.

6.15.6.3.3 Type II is for general use on exterior and interior surfaces. It is effective on light oils and hydraulic fluids. Type II contains less solvents and can be used in areas of reduced ventilation.

6.15.6.3.4 Type III is for use on high gloss surfaces only. It contains abrasives that remove soils by wearing away the surface that holds the soil. This cleaner will raise the sheen of gloss, semi-gloss, or flat topcoats. Type III is used to spot clean, and clean engine exhaust areas on gloss finishes.

6.15.6.3.5 Type IV is a rubberized spot cleaner, for use on semi-gloss and flat (camouflage) finishes. It effectively cleans exhaust tracks, smudges, boot marks, or other embedded soils. Type IV is a cleaner with suspended rubber particles. When the rubber particles are rubbed on a soiled surface, the particles act like tiny erasers and remove the soil. This cleaner will not alter the gloss of a camouflage coating.

6.15.6.3.6 Type V is a gelled cleaner which can be used to replace solvent cleaning where water rinsing can be allowed, and can be used to clean vertical surfaces where thin cleaners will run off.

6.15.6.4 MIL-PRF-87937D, Cleaning Compound Aerospace Equipment, Types I, II, III, IV.

6.15.6.4.1 Type I is for general use on exterior surfaces, and is effective for removing heavy oils, greases and carbon deposits. Type I should not be used in poorly ventilated areas. Do not heat above 115 °F. Type I is biodegradable in many waste treatment facilities. However, before using this material verify that this cleaner can be treated by local facili-

ties. Type I will separate out oily waste, allowing the waste to be removed and disposed of while the remainder of the cleaning solution is sent to a waste treatment facility.

6.15.6.4.2 Type II is for general use on exterior surfaces and for removing medium to light oils and greases. Type II is biodegradable in many waste treatment facilities, however, before using, verify that this cleaner can be treated by local facilities. Type II will separate out oily waste, allowing the waste to be removed and disposed of while the remainder of the cleaning solution is sent to a waste treatment facility.

6.15.6.4.3 Type III is a gel cleaner, and is effective for cleaning medium to light oils. Since it is a gel, it will adhere to vertical surfaces for more effective cleaning. Type III will separate out oily waste, however, the oil/cleaner separation is difficult to determine unless the solution sits for several hours. Type III is biodegradable in many waste treatment facilities. However, before using this material verify that this cleaner can be treated by local facilities.

6.15.6.4.4 Type IV is heavy duty cleaner, effective for cleaning heavy oils and greases. This material differs from Type I in that it has no flash point. Type IV is biodegradable in many waste treatment facilities, however, before using, verify that this cleaner can be treated by local facilities. Type IV will separate out oily waste, allowing the waste to be removed and disposed of while the remainder of the cleaning solution is sent to a waste treatment facility.

6.15.6.4.5 Type I, II and IV cleaners may be used in dip tanks. They may not be used in vapor degreasing tanks.

NOTE

Use only authorized cleaning materials and follow the manufacturer's guidance on dilution, agitation, and rinsing. Damage to the surfaces being cleaned, coating deterioration, or premature corrosion may occur.

6.15.7 Solvent Cleaning and the Use of Salt-Water Washdown Additives.

6.15.7.1 Solvent-based cleaners are typically used to clean oily or very stubborn soils and stains. They must be used carefully to avoid damage to equipment and personnel. Additionally, many of these solvents are targeted by environmental regulations that may limit their use or place extreme restrictions on disposal techniques. Judicious use will get the job done while minimizing the amounts of cleaners that have to be disposed of. The regular use of saltwater washdown additives applied to vehicles during regular wash and clear water rinse cycles has shown that the approved additive materials can provide enhanced corrosion protection to vehicles stored, and operating in, close proximity to salt contamination.

6.15.7.2 MIL-PRF-680A(1), Types II and III. MIL-PRF-680A(1), Types II and III, also known as Stoddard's Solvent or Dry Cleaning Solvent, can be used to clean a variety of soils, particularly oils, greases and hydraulic fluids. Type II has a flash point of less than 140 °F, Type III has a flash point of over 200 °F.

6.15.7.2.1 Both types of MIL-PRF-680A(1) will leave a slight oily residue. This is desirable if flash-rusting protection is needed. If the part cleaned with MIL-PRF-680A(1) is to be painted or surface bonding is to occur, wiping the affected surfaces with a clean cloth dampened with a non-petroleum based cleaning compound, or solvent cleaner such as Isopropyl Alcohol TT-I-735 or Acetone O-A-51, is necessary.

6.15.7.3 Saltwater Washdown Additives.

6.15.7.3.1 Saltwater washdown additives may be used for equipment based or operating in locations where salt water regularly contaminates the equipment surfaces. The additives are designed to assist in the removal of dried salt deposits. The removal of the salt deposits on a regular basis will significantly reduce the occurrences and severity of corrosion on support equipment. The saltwater washdown additives are most effective if used in a regular two week rinsing cycle for areas where equipment is stored or operates in the immediate vicinity of saltwater environments (less than 2.5 miles).

6.15.7.3.2 For equipment deploying or returning from deployment in desert environments where the sand contains high chloride and carbonate concentrations, and where wash capabilities are limited, the washdown additives should be applied before and after deployment operations and whenever the equipment is completely washed during deployment. Follow the manufacturers mixing and application instructions.

6.15.8 General Cleaning and Material Process Concerns.

6.15.8.1 Cleaning compounds facilitate oils, grease, and soil removal. However, cleaning compounds can damage certain material surfaces and parts if they are improperly diluted and applied. TO 1-1-691 identifies additional approved cleaning compounds and dilution rates for washing operations. Using cleaning solutions more concentrated than the manufacturer's dilution rates is not acceptable. This action may actually hamper washing operations because concentrated soap solutions tend to make surfaces slippery and can impede washing pads from loosening the soils. In addition, concentrated solutions require more rinse water to remove excess cleaner and may cause paint deterioration or corrosion.

6.15.8.2 Cleaning compounds may impart Biochemical Oxygen Demand (BOD) to the washwater and increase the pH. Therefore, use of excessive amounts of cleaning compounds should be avoided.

6.15.8.3 Water Temperature. Hot-water washing breaks the bond between the grease/oil and the vehicle, flushing away the grease and oil. Additionally, hot-water washers reduce quantities of cleaning compounds consumed. Hot water shall be used, when feasible, for equipment cleaning operations.

6.15.8.4 At deployed/remote sites, raw water can significantly impact the metals content of washwater. Raw water could dissolve metals from building and washwater plumbing systems, including copper from copper pipe, zinc and lead from galvanized pipe, etc. To assist units in deployed locations the required water quality standards for equipment wash stations are listed below. Unless an emergency exists, organizations should have the nearest DOD civil engineer or other qualified laboratory service assess the water quality standards at the deployed locations, prior to the commencement of washing operations.

WARNING

Do not clean electrical equipment with the power on. There are hazards of personnel being shocked or electrocuted. Disconnect batteries prior to cleaning electrical generator sets as shorting of switches may cause power to be applied to system

CAUTION

Any solvent must be used with extreme care on insulation and insulated wires, particularly in electric equipment as the solvents may deteriorate the insulation.

6.15.8.5 Removal of Fungus from Electrical Connectors. Pins (male contacts) and receiver holes (female contacts), which are contaminated by fungus growth, can be cleaned by wiping with TT-I-735, Isopropyl Alcohol. A clean, lint-free cloth moistened with the solvent should be used to wipe the pins and a toothpick or pipe cleaner saturated with the solvent should be used to wipe out the holes.

CAUTION

Flint abrasive paper shall be used instead of aluminum oxide, emery abrasive paper or cloth to clean contact points, commutators or slip rings of generators and motors. Since aluminum oxide and emery are conductors of electricity, the detached grains will short circuit the commutator and the dislodged grains could lodge under the brush where they could cut deep scratches in the soft copper commutator. Do not vapor clean or spray clean assembled motors.

6.15.8.6 Contact Points. Use of solvents to clean electrical contact points may result in an oil film, which will interfere with operation of the point. Use only flint abrasive paper. Do not use aluminum oxide or emory abrasive paper or cloth to clean electrical contact points. The contact points shall be dusted or vacuum cleaned thoroughly after cleaning with abrasive. Care must be taken so that no abrasive particles enter functional parts.

6.15.8.7 Electronic Components. Wipe the external areas of the component with dry cloth. Carefully vacuum any loose dust or metal particles from the interior of the component or compartment. Use a soft, non-metallic bristle brush to aid in cleaning. After cleaning, apply a light film of MIL-L-87177A(1), Grade B on the inside of the connector and the electrical contact points.

6.15.9 Corrosion Preventive Compounds (CPC) Types and Applications. CPCs are used for temporary protection of painted and unpainted surfaces and where paint has been damaged or removed. CPCs function by preventing corrosive materials from contacting and corroding bare metal surfaces. Some of the compounds have the capability of displacing moisture in seams, joints and panels that overlap each other. Some CPCs also provide lubrication as well as corrosion protection. Generally, CPCs are mixtures of special additives in petroleum derivatives (special oils or greases). CPCs range in appearance and consistency from the thick, black types such as MIL-PRF-16173E, Grade 1, to light electronic grade spray material such as MIL-L-87177A(1), Grade B. Several specialty CPCs contain vapor phase corrosion inhibitors that provide additional corrosion protection in enclosed areas. The thicker CPCs provide the best corrosion protection, are longer lasting, and more difficult to remove. The thinner materials provide some lubrication and do not crack, chip or peel but must be removed and replaced. The protection provided is temporary, so the compound must be reapplied periodically after removal by washing or contact with solvents or fuel.

6.15.9.1 The recommended maximum frequency of CPC application is based on the corrosion severity of the operational environment. The frequency of application can be set to coincide with wash cycles, but should not be extended. These compounds should not be considered an alternative for proper painting; however, CPCs do provide temporary protection until proper corrosion removal and repainting can take place. The CPCs should not be applied at temperatures above 95 °F or below 50 °F. Refer to TO 1-1-691 for CPC recommended replacement frequency.

WARNING

CPCs shall not be used on, or adjacent to, oxygen lines, fittings or equipment. The compound shall not be used on surfaces where temperatures will exceed 300 °F. Failure to comply may result in fire hazard.

CAUTION

CPCs have a flash point above 100 °F, but may contain flammable solvents. The compounds should be handled, stored, and applied with the same safety precautions as paint type finishes containing flammable solvents. Failure to comply could result in a fire.

NOTE

Use only corrosion preventive compounds authorized by 580 CBSS/GBL or the Air Force Corrosion Prevention and Control Office, AFRL/MLS/OLR.

6.15.9.2 MIL-PRF-81309F, Corrosion Preventive Compound Water Displacing Ultra Thin Film, is a general-purpose corrosion preventive compound that can be used whenever a CPC or a water displacing compound is called for but no specification is referenced. MIL-PRF-81309F materials are excellent water displacing compounds that provide an ultra thin, soft protective film (0.5-mil or less). The specification covers two types, both of which can be applied by dipping, spraying, brushing, or an aerosol container. They provide temporary protection from corrosion and are easily removable with a solvent. The two types primarily used for vehicles are Types II and III.

6.15.9.2.1 Type II. Type II is soft, thin CPC film for general use. It is particularly useful on moving or sliding parts where some lubrication is needed, such as hinges or bomb racks. It may be washed away by rain or wash procedures. Type II shall be used to protect areas which cannot be properly drained or contain recesses that are particularly difficult to reach.

6.15.9.2.2 Type III. Type III is an ultra thin, soft film CPC primarily used on avionics and electronic equipment. Although this coating is nonconductive, it will allow electrical contact because it is soft and very thin. Do not use MIL-PRF-16173E, Grade 3 as a substitute.

6.15.9.3 MIL-DTL-85054C, Corrosion Preventive Compound (AMLGUARD), is a water displacing CPC that forms a clear, dry, flexible film. It is intended for use as a protective coating until painting is practical. Because of its paint-like characteristics, it does not provide lubrication. It can be applied by dipping, brushing, spraying, or from aerosol containers. After each use of an aerosol can, invert the can and spray until spray tip (nozzle) is clear of entrapped material. If an aerosol can does not spray, invert and depress the spray tip several times to clear the delivery tube and spray head. If the can still does not spray, remove and clean the plastic spray head then spray again to clear the delivery tube. AMLGUARD buildup is difficult to remove, especially after prolonged exposure to direct sunlight. As increasing CPC buildup may affect the functionality of the parts to which the CPC is applied, previously applied coatings should be removed before reapplication.

6.15.9.4 MIL-PRF-16173E is a non-water displacing CPC that may be used on dried surfaces or on surfaces that have been first treated with a water displacing CPC. It is a very effective, soft film, non-drying CPC that is easily removed. As a soft film CPC, care must be taken to ensure contaminants do not collect on the soft CPC surface for extended periods of time. MIL-PRF-16173E covers five different grades of CPCs that can be applied by brushing or dipping. Grades l, 2, and 4 do not displace water and must be applied to dried surfaces or to surfaces that have been treated with MIL-PRF-81309F.

6.15.9.4.1 Grade l. A thick hard, black CPC that is difficult to remove. However, it offers the most corrosion protection of all the CPCs indoors and outdoors and may be used at temperatures down to 0 °F.

6.15.9.4.2 Grade 2. A thick, soft, grease-like, brown CPC that remains tacky and can be removed with mineral spirits or dry cleaning solvent. It protects under relatively severe conditions and, given adequate maintenance touch-up as necessary, can be used for most maximum protection requirements. It may be used at temperatures as low as -40 °F.

6.15.9.4.3 Grade 3. A thin, soft film CPC. Use MIL-PRF-81309F, Type III, as a substitute.

6.15.9.4.4 Grade 4. A thin, relatively dry, semitransparent film through which identification can be read. It may be used at temperatures as low as -40 °F.

6.15.9.4.5 Grade 5. A soft film, low pressure steam removable CPC.

6.15.9.5 MIL-PRF-63460D(6) is a thin, water displacing, protective, penetrating lubricant used for cleaning, lubrication and preservation of components. This material has good lubricating properties between -65 °F and 105 °F (-54 °C and 41 °C). It may be applied by brushing, dipping, or spraying.

6.15.9.6 MIL-L-87177A(1), Lubricants, Water Displacing, Synthetic, is a water displacing, electronics grade CPC with vapor corrosion inhibitors (VCI). This material is specifically formulated for electrical/electronic equipment and components.

CAUTION

This material does not alter the electrical resistance or magnetic properties of metal substrates. The approved material can be safely applied to protect low-voltage circuits or relays without causing any changes in conductivity. It can be safely used with most plastics, elastomers and other nonmetallics.

6.15.10 Sealers and Sealant Usage.

6.15.10.1 Many sections of the vehicles contain joints and flanges. The use of an appropriate sealer to prevent the entry of water and contaminants into crevices and joints is an excellent way to minimize corrosion. Sealers can also be used to separate two conductive metal surfaces, preventing galvanic or crevice corrosion.

6.15.10.2 Sealers are normally resins, with or without fillers, which are compounded to dry to a hard surface or to remain soft and pliable. They can be formed in place, applied by spray gun or paste.

CAUTION

Room Temperature Vulcanizing (RTV) Adhesive/Sealant, MIL-A-46106B(3) emits acetic acid during its curing process and can cause corrosion when used in confined spaces. Unless otherwise directed by the OEM or other official guidance, only non-acetic acid emitting RTV shall be used. Refer to TO 1-1-691 for sealant materials, applications, and processes.

6.15.10.3 There are sealants in the Air Force inventory that can damage vehicle parts and structures if used improperly. For example, Room Temperature Vulcanizing (RTV) Adhesive/Sealant, MIL-A-46106B(3), is not authorized when sealing metal parts in enclosed areas.

6.16 CORROSION THEORY, CAUSE AND EFFECTS.

To help prevent corrosion, vehicle technicians first need to understand corrosion causes and effects and be able to recognize that there are several types of corrosion with different preventive measures. This section is an introduction to corrosion theory, the causes of corrosion, and the factors that influence its development. The various forms of corrosion and the effect of corrosive environments on vehicles are also described in this section. The purpose of this section is to provide maintenance personnel with the knowledge necessary to understand the causes of corrosion, and in turn help minimize corrosion damage through prevention and early detection and treatment.

6.16.1 Definitions of Corrosion. Corrosion is the electrochemical deterioration of a metal because of its chemical reaction with the surrounding environment. This reaction occurs because of the tendency of metals to return to their naturally occurring states, usually oxide or sulfide ores. For example, iron in the presence of moisture and air will return to its natural state, iron oxide or rust. Aluminum and magnesium form corrosion products that are white oxides or hydroxides. When corrosion occurs, water is usually present in some form (e.g., humidity, moisture, condensation, rain, salt spray, etc.) acting as an electrolyte and reacting chemically with metal surfaces.

6.16.2 Corrosion Related Chemical Definitions.

6.16.2.1 Atom. The smallest unit of an element. There are more than 100 elements, including metals (such as aluminum, magnesium, iron, nickel, titanium, cadmium, chromium, copper, and carbon) and non-metals (such as hydrogen, oxygen, sulfur, and chlorine).

6.16.2.2 Electron. A negatively charged particle much smaller than an atom. An electrical current occurs when electrons are forced to move through metal conductors. Electrons also flow through water solutions, but only in the presence of ions.

6.16.2.3 Ions. Atoms or groups of atoms bound together that is either positively or negatively charged. An electrical current occurs when ions are forced to move through water solutions. Ions cannot move through metal conductors.

6.16.2.4 Electrolyte. A liquid solution (usually water) containing ions. Salt water is an electrolyte, an aqueous (i.e., water) solution of sodium ions and chloride ions.

6.16.3 Theory of Corrosion. When a metal corrodes, the metal atoms lose electrons and become metal ions in an electrolyte solution. The positively charged metal ions can combine with negatively charged ions to form corrosion products, such as metallic chlorides, oxides, hydroxides, and sulfides. Four conditions must exist before this type of corrosion can occur.

6.16.3.1 A metal must be present that has a tendency to corrode. The corroding metal is known as the anode.

6.16.3.2 A dissimilar conductive material (the cathode) that has less of a tendency to corrode than the anode must be present. Examples include a different metal, a protected part of the same metal, or conductive composites.

6.16.3.3 A conductive liquid (electrolyte) must connect the anode and cathode so that ions can carry electrical current between them.

6.16.3.4 Electrical contact between the anode and cathode (usually in the form of metal-to-metal contact) must exist so that electrons can move from the anode, where they are released, to the cathode. Eliminating any one of these four conditions illustrated in the corrosion cell diagram shown at Figure 6-3 will stop corrosion. For example, an effective primer and paint film on a metal surface will prevent the conducting liquid (electrolyte) from conducting the anode and cathode thereby stopping the electric current.

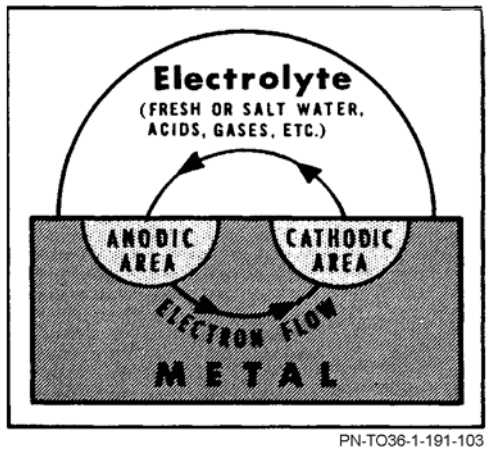

Figure 6-3. Diagram of a Simplified Corrosion Cell

Figure 6-4. Example of Raised Corrosion Product

6.16.4 Development of Corrosion. All corrosive attacks begin on the surface of metals. The word surface should not be construed as corrosion only occurring on the top of a piece of metal. The surface of a piece of metal may be the interior wall of a hollow tube or the secondary structure of a vehicle, the top, sides, or bottom of a panel, etc. If allowed to progress, corrosion can penetrate into and through the

metal. When corrosion products form, they often precipitate onto the corroding surface as a powdery or scaled deposit as shown in Figure 6-4.

6.16.5 Metals Affected by Corrosion. The metals most commonly used in vehicle construction are aluminum, steel, and to some extent magnesium. Cadmium, nickel, chromium, and silver are sometimes used as protective plating. Metals have a wide range of corrosion resistance. The most active metals (i.e., those that tend to lose electrons easily), such as magnesium and aluminum, corrode easily and are listed at the top of Table 6-4. The most noble metals (i.e., those that do not lose electrons easily), such as gold and silver, do not corrode easily and are listed at the bottom of Table 6-4.

6.16.6 Types of Corrosion. Corrosion is cataloged and classified in many ways and the treatment of the corroded area may differ based on the metal substrate and type of corrosion. Occasionally, different names are used for the same type of corrosion. Common types of corrosion are described below.

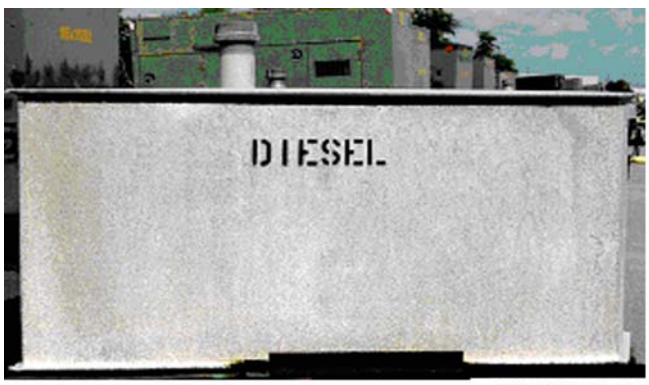

PN-TO36-1-191-105

Figure 6-5. Aluminum Fuel Tank Exhibiting Uniform Etch

6.16.6.1 Uniform etch corrosion (see Figure 6-5) results from a direct chemical attack on a metal surface and involves only the metal surface. On a polished surface, this type of corrosion is first seen as a general dulling or etching of the surface and if the attack continues, the surface becomes rough and possibly frosted in appearance. This type of corrosion appears uniform because the anodes and cathodes are very small and constantly shift from one area of the surface to another. An example is the etching of metals by acids. The discoloration or general dulling of metal created by exposure to elevated temperatures is not considered to be uniform etch corrosion.

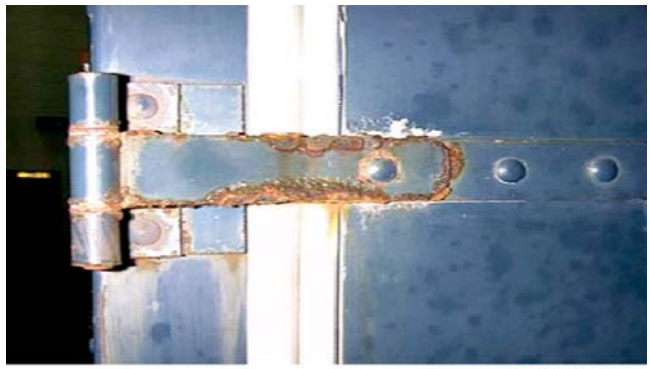

PN-T036-1-191-106

Figure 6-6. Galvanic Corrosion Steel Hinge Bolted to an Aluminum Door

6.16.6.2 Galvanic corrosion is usually described as corrosion between two or more dissimilar metals that are in electrical contact in the presence of an electrolyte. Figure 6-6 illustrates the principal of galvanic corrosion by having a steel hinge bolted to an aluminum skinned door. Galvanic corrosion is usually recognizable by a buildup of corrosion at the joint between the metals. If the dissimilar metal groups listed in Table 6-4 are widely separated and are in direct electrical contact, galvanic corrosion is probably occurring. The less corrosion resistant metal (the higher metal in Table 6-4) becomes the anode and the more corrosion-resistant metal (the lower metal in Table 6-4) becomes the cathode. As stated earlier, the anode will corrode. The farther apart the metals are in Table 6-4, the more severe will be the corrosion of the anodic metal if the metals are joined electrically and placed in an electrolyte. In most cases, the galvanic series listed in Table 6-4 is a good predictor of how metals will corrode in a galvanic couple. A major factor in galvanic corrosion is the size of the anode and cathode. A small anode in contact with a large cathode will corrode much more severely than a large anode in contact with a small cathode.

6.16.6.3 The most common corrosion on aluminum and magnesium alloys is called pitting corrosion (see Figure 6-7). It is first noticeable as a white or gray powdery deposit, similar to dust, that blotches the surface. When the deposits are cleaned away, tiny pits or holes can be seen in the surface. Pitting corrosion may also occur in other types of alloys. The combination of small active anodes to large passive cathodes causes severe pitting. Pitting starts as an

advanced form of uniform etch. If left untreated, it can deteriorate into very severe corrosion that results in localized and relatively deep holes in the metal. Pits are isolated holes that can vary in shape and size and usually take several months to a year before they become visible. Pitting is an extremely destructive and insidious form of corrosion. It causes equipment to fail because of perforation with very little weight or material loss on the entire structure. It is also difficult to detect because the pits are often covered with corrosion products. Pitting usually initiates at anodic points on a metal surface such as breaks in protective coatings or films, scratches, and irregularities that are exposed to an aggressive electrolyte. Pits usually grow in the direction of gravity and will develop and grow downward from a horizontal surface. Even though a pit is slow to initiate, once started, it will progress at an ever-increasing rate and will tend to undercut the surface as it grows.

Figure 6-7. Pitting Corrosion

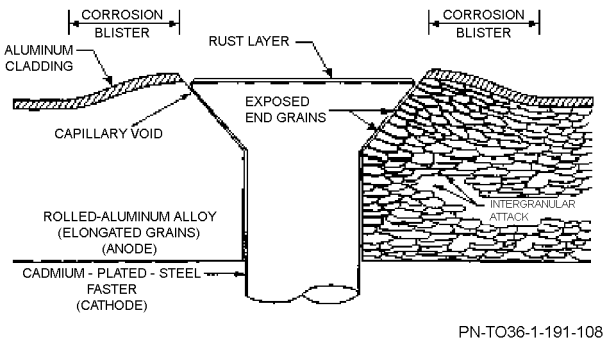

Figure 6-8. Intergranular Corrosion Cell

6.16.6.4 Intergranular corrosion (see Figure 6-8) is an attack on the grain boundaries of the metal. A highly magnified cross-section of any commercial alloy shows the granular structure of the metal. This consists of quantities of individual grains, each having a clearly defined boundary that chemically differ from the metal within the grain. The grain boundaries are frequently anodic (i.e., tend to corrode more easily) to the metal within the grain. When in contact with an electrolyte, rapid corrosion occurs at the grain boundaries.

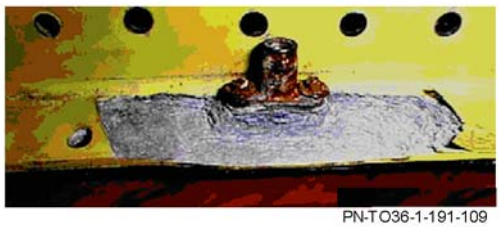

Figure 6-9. Exfoliation Corrosion

6.16.6.5 Exfoliation corrosion (see Figure 6-9) is an advanced form of Intergranular corrosion and occurs when the surface grains of a metal are lifted up by the force of expanding corrosion products occurring at the metal grain boundaries. The lifting up or swelling is visible evidence of exfoliation corrosion. Exfoliation occurs on extruded, rolled, wrought, and forged high strength aluminum and magnesium parts.

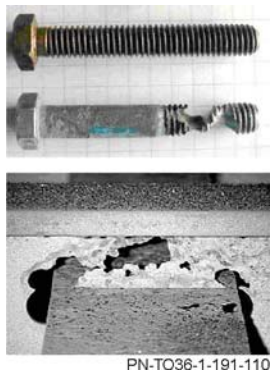

Figure 6-10. Concentration/Crevice Corrosion

6.16.6.6 Concentration/Crevice corrosion (see Figure 6-10) occurs when the electrolyte in a crevice has a different concentration than the area adjacent to the crevice. This type of corrosion is also known as concentration cell corrosion. Electrolyte inside the crevice contains less oxygen and more metal ions than electrolyte just outside the crevice. As a result, the metal surfaces have different activities, even though they may be part of the same metal, and corrosion occurs inside the crevice. This form of corrosion often occurs between faying surfaces or when a surface is covered by a foreign material (such as dirt) or under gaskets, rubber, or plastic tape. The mechanisms involved in crevice corrosion are very similar to pitting corrosion. Crevice corrosion most often occurs where there are stagnant solutions (elec-

trolytes) in holes, gasket surfaces, lap joints, under surface deposits (sand, dirt, corrosion products, etc.), and in crevices under bolt and rivet heads. To become a site for corrosion, a crevice must be wide enough progresses at ever increasing rates (due to various electrochemical factors). Crevice corrosion is also most intense in solutions containing chlorides (saltwater). Metals susceptible to pitting (stainless steel, aluminum, magnesium) are also susceptible to crevice corrosion. However, not all metals that are susceptible to crevice corrosion will be susceptible to pitting. Three general types of crevice corrosion are: Metal ion concentration cells, Oxygen concentration cells, Active-passive cells.

6.16.6.7 Stress corrosion cracking (SCC) is the Intergranular cracking of a metal caused by the combined effects of constant tensile stress (internal or applied) and corrosion. Internal or residual stresses are produced by cold working, forming, and heat treatment operations during manufacture of a part and remain concealed in the part unless stress relief operations are used. Other hidden stresses are induced in parts when press or shrink fits are used and when slightly mismatched parts are clamped together with rivets and bolts. All these stresses add to those caused by applying normal loads to parts in operation. Metals have threshold stresses below which stress corrosion cracking will not occur. This threshold stress varies from metal to metal depending on the characteristics of the applied stress. The following conditions must be present for SCC to occur. The component or structure must be under a tensile stress. This tensile stress may be provided by an externally applied service load or a residual stress resulting from manufacturing procedures such as rolling, punching, deep drawing, or welding. The material must also be exposed to an environment that causes SCC. Whereas all metals will form stress corrosion cracks in some environment under the proper conditions, there is no one environment that causes SCC in all metals. SCC is most prevalent and of the most concern in high strength steels, stainless steels (mostly in the austenitic group), high strength aluminum alloys (2000 and 7000 series), copper-based alloys, and titanium alloys.

6.16.6.8 Hydrogen embrittlement is the weakening of materials such as high strength steel (typically 180 Ksi and above), some high-strength aluminum, and some stainless steels when they are exposed to acid paint removers, plating solutions, and other acidic and more alkaline materials. This occurs when a cathodic reaction on the high strength metal surface produces hydrogen, which diffuses into the bulk metal, accumulates at grain boundaries, and weakens the structure. If the part is under load or contains residual manufacturing stresses, sudden catastrophic failure occurs when the part can no longer sustain the internal and/or applied stresses. Hydrogen embrittlement has been known to occur in parts stressed to only 15 percent of nominal tensile strength.

6.16.6.9 Corrosion fatigue is the cracking of metals caused by the combined effects of cyclic stress and corrosion and is very similar to stress corrosion cracking. If it is in a corrosive environment, no metal is immune to some reduction in resistance to cyclic stressing. In simplified terms, corrosion fatigue is mechanical fatigue aggravated by a corrosive environment. In corrosion fatigue, the corrosive environment causes a lowering or reduction of the fatigue limit (the ability of a metal to resist fatigue cracking) of a metal as it undergoes cycles of stress. In the absence of a corrosive environment, this same metal would be able to withstand significantly more cycles of stress before cracking. Corrosion fatigue seems to be most prevalent in environments that cause pitting corrosion.

6.16.6.10 Filiform corrosion is a special form of oxygen concentration cell corrosion (or crevice corrosion) that occurs on metal surfaces having an organic coating system. It is recognizable by its characteristic wormlike trace of corrosion products beneath the paint film (see Figure 6-11). Filiform occurs when the relative humidity of the air is between 78 percent and 90 percent and when the surface is slightly acidic. It starts at breaks in the coating system (such as scratches and cracks around fasteners and seams) and proceeds underneath the coating because of the diffusion of water vapor and oxygen from the air through the coating. Filiform corrosion can attack steel, magnesium, and aluminum surfaces and may lead to more serious corrosion in some locations. Filiform corrosion can be prevented by: storing equipment in an environment with a relative humidity below 70 percent; using coating systems with a low rate of diffusion for oxygen and water vapors; maintaining coatings in good conditions; and washing equipment to remove acidic contaminants from the surface (such as those created by air pollutants). Filiform corrosion is an unusual type of attack since it does not weaken or destroy the metal but only affects the surface appearance. Filiform corrosion most often occurs in humid environments. Once the humidity drops below 65

percent, Filiform corrosion stops. When the humidity rises above 95 percent, blisters form rather than filaments. Filiform corrosion forms mostly on steel, aluminum, magnesium, and zinc.

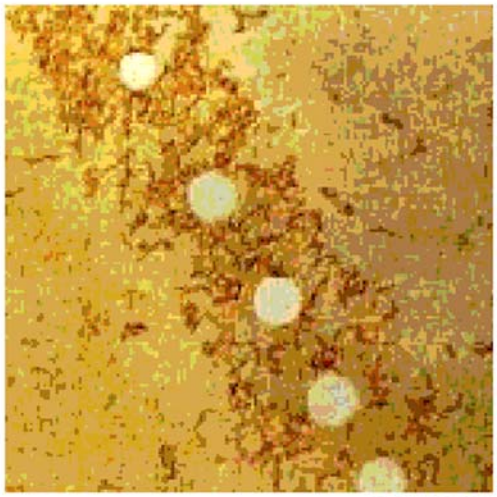

PN-TO36-1-191-111

Figure 6-11. Filiform Corrosion

6.16.6.11 Fetting corrosion (see Figure 6-12) is a special form of concentration cell corrosion that occurs in combination with surface wear. The corrosion products increase the wear of the surface, and the wear exposes more bare metal surface to be corroded. The overall effect is greater than the single effects of corrosion and wear added together. It has the general appearance of galling, in which chunks of metal are torn from the surface with corrosion at the torn areas or ragged pits. This type of corrosion occurs on faying surfaces of close tolerance and on parts under high pressure in a corrosive environment when there is slight relative movement of parts (such as that caused by vibration). Fretting corrosion is most commonly found in heavily loaded joints that are subject to vibration such as press fitted ball bearing races, bolted flanges, fayed surfaces, electrical connections, and riveted areas. Fretting corrosion can be very destructive in that it loosens mated parts and close tolerance fittings that in turn, lead to stress or fatigue failures. In the case of iron alloys, brown to red iron oxide will issue from the area or interface experiencing fretting corrosion. On aluminum alloys, a black corrosion product is evident.

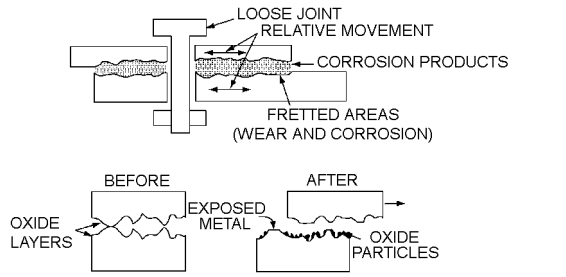

PN-TO36-1-191-112

Figure 6-12. Diagram of Fretting Corrosion

Table 6-3. Corrosion Severity Zones and Minimum Wash Interval

Location	Very Severe	Severe	Moderate	Mild
	Wash vehicle every 5 days	Wash vehicle every 15 days	Wash vehicle every 25 days	Wash vehicle every 45 days
Air Force Academy, Colorado Springs, CO			X	
Aj Taif, SA				X
Al Jouf, SA				X
Albrook AFS, PAN		X		
Allen C. Thompson Fld.; Jackson, MS (ANG)			X	
Altus AFB, OK (AETC)			X	
Anchorage IAP, AK (ANG)				X
Andersen AFB, GU	X			
Andrews AFB, MD (Wash. DC)				X
Ankara, AS TUR			X	
Annville, PA (ANG)			X	
Antiqua, West Indies		X		
Arnold AFB, TN				X
As Sulayyil, SA				X
Ascension Island, UK		X		
Atlantic City, NJ (ANG)				X

Table 6-3. Corrosion Severity Zones and Minimum Wash Interval - Continued

Location	Very Severe	Severe	Moderate	Mild
	Wash vehicle every 5 days	Wash vehicle every 15 days	Wash vehicle every 25 days	Wash vehicle every 45 days
Aviano AB, IT				X
Bagram AB, Afganistan			X	
Bahrain		X		
Bangor IAP, ME (ANG)			X	
Barksdale AFB; Shreveport, LA				X
Barnes M. Apt.; Westfield, MA (ANG)			X	
Battle Creek, MI (ANG)			X	
Beale AFB; Marysville, CA			X	
Bellows AFS, HI			X	
Birmingham International Apt., AL (ANG)			X	
Bolling AFB DC			X	
Bradley IAP; Windsor Locks, CT (ANG)			X	
Brindisi/Casale AB, IT		X		
Brooks City-Base, TX				X
Buckley ANGB; Denver, CO (ANG)			X	
Burlington IAP, VT (ANG)			X	
Byrd Fld.; Richmond, VA (ANG)			X	
Calumet AFS MI			X	
Camp New Amsterdam, NE			X	
Cannon AFB; Clovis, NM				X
Cannon IAP, NV				X
Cape Canaveral AFS, FL		X		
Cape Cod AFS, MA			X	
Capital Municipal Apt.; Springfield, IL (ANG)			X	
Channel Island; Port Hueneme NAS, CA (ANG)		X		
Charleston AFB, SC			X	
Charleston/Kanawha Apt., WV (ANG)				X
Charlotte/Douglas Municipal Apt NC			X	
Cheyenne Apt. WY (ANG)				X
Clear AFS, AK			X	
Columbus AFB, MS (AETC)			X	
Comiso, AS IT			X	
Danelly Fld.; Montgomery, AL (ANG)				X
Davis-Monthan AFB; Tucson, AZ				X
Decimo Mannu AB SP			X	
Des Moines IAP, IA (ANG)			X	
Dhahran, SA				X
Diego Garcia, Indian Ocean	X			

Table 6-3. Corrosion Severity Zones and Minimum Wash Interval - Continued

Location	Very Severe	Severe	Moderate	Mild
	Wash vehicle every 5 days	Wash vehicle every 15 days	Wash vehicle every 25 days	Wash vehicle every 45 days
Dobbins ARB; Marietta, GA (AFRC)				X
Dover AFB, DE			X	
Duluth IAP, MN (ANG)			X	
Dyess AFB; Abilene, TX				X
Eareckson (Shemya) AFB, Aleutian Is., AK	X			
East. WV Reg. Apt; Martinsburg, WV (ANG)				X
Ebbing ANG, AR		X		
Edwards AFB; Rosamond, CA				X
Eglin AFB, FL		X		
Eielson AFB, AK			X	
Ellington Fld.; Houston, TX (ANG)		X		
Ellsworth AFB; Rapid City, SD				X
Elmendorf AFB; Anchorage, AK			X	
FAA Tech Center NJ			X	
Fairchild AFB; Spokane, WA				X
Falcon AFB, CO			X	
Florennes AB FRG			X	
Forbes Fld., KS (ANG)			X	
Fort Smith Mun. Apt., AR (ANG)				X
Fort Wayne Apt., IN (ANG)			X	
Francis E. Warren AFB; Cheyenne, WY (ANG)				X
Fresno Air Term., CA (ANG)			X	
Galena Arpt, AK		X		
Geilenkhirchen, GE			X	
Gen. Mitchell IAP; Milwaukee, WI (ANG)			X	
Gibbsboro AFS, NJ			X	
Glenn L. Martin SAP, MD			X	
Goodfellow AFB, TX				X
Gowen Field, Boise Air Term., ID (ANG)			X	
Grand Forks AFB; Emarado, ND			X	
Great Falls IAP, MT (ANG)			X	
Greater Peoria Apt.; IL (ANG)			X	
Griffiss AFB; Rome, NY			X	
Grissom ARB; Peru, IN (AFRC)			X	
Gulfport-Biloxi RAP MS			X	
Gunter AFS, AL				X
Hancock IAP; Syracuse, NY (ANG)			X	
Hanscom AFB; Bedford, MA			X	
Harrisburg IAP, PA (ANG)			X	
Hector IAP; Fargo, ND (ANG)				X

Table 6-3. Corrosion Severity Zones and Minimum Wash Interval - Continued

Location	Very Severe	Severe	Moderate	Mild
	Wash vehicle every 5 days	Wash vehicle every 15 days	Wash vehicle every 25 days	Wash vehicle every 45 days
Hellenikon AB, GR			X	
Hickam AFB; Honolulu, HI			X	
Hill AFB, Ogden, UT				X
Holloman AFB; Alamogordo, NM				X
Homestead ARB, FL (AFRC)		X		
Howard AB, Panama		X		
Hulman Reg. Apt., IN (ANG)			X	
Hurlburt Fld.; Fort Walton Beach, FL		X		
Incirlik AB, Turkey			X	
Indian Springs AFAF, NV			X	
Iraklion AS, GR		X		
Istres AB, France			X	
Izmir AS, TUR				X
Jacksonville IAP, FL (ANG)			X	
Jeddah, SA				X
Joe Foss Fld.; Sioux Falls, SD (ANG)			X	
Kadena AB, Japan	X			
Kanawha Apt, WV			X	
Keesler AFB; Biloxi, MS		X		
Key Fld.; Meridian, MS (ANG)				X
Khamis Mushay, SA			X	
Kim Hae AB, KO			X	
King Khalid, SA				X
King Solomon Arpt, AK			X	
Kingsley Fld.; Klamoth Falls IAP, OR (ANG)				X
Kirtland AFB, NM; Albuquerque, NM			X	
Kulis ANG, AK			X	
Kunsan AB; S. Korea		X		
Kwangju AB, KO			X	
Lackland AFB, TX			X	
Lajes Fld.; Azores, Portugal	X			
Lambert Field; St. Louis IAP, MO (ANG)				X
Langley AFB; Hampton, VA		X		
Larnaka International Apt., Cyprus		X		
Laughlin AFB; Del Rio, TX				X
Lincoln Mun. Apt., NE (ANG)			X	
Little Rock AFB, AR (AETC&ANG)				X
Los Angeles AFB, CA			X	
Luke AFB; Glendale, AZ				X
MacDill AFB; Tampa FL		X		

Table 6-3. Corrosion Severity Zones and Minimum Wash Interval - Continued

Location	Very Severe	Severe	Moderate	Mild
	Wash vehicle every 5 days	Wash vehicle every 15 days	Wash vehicle every 25 days	Wash vehicle every 45 days
Mahe Island, Seychelles		X		
Malstrom AFB; Great Fall, MT			X	
Mansfield Lahm Apt., OH (ANG)				X
March ARB; Riverside, CA (AFRC&ANG)			X	
Martin St. Apt.; Baltimore, MD (ANG)				X
Maxwell AFB; Montgomery, AL				X
McChord AFB; Tacoma, WA			X	
McClellan AFB; Sacramento, CA			X	
McCollum Arpt, GA			X	
McConnell AFB; Wichita, KS			X	
McEntire ANGB; Columbia, SC (ANG)			X	
McGhee Tyson Apt.; Aloca, TN (ANG)			X	
McGuire AFB; Wrightstown, NJ			X	
Memphis IAP, TN (ANG)			X	
Minn-St. Paul IAP, MN (AFR&ANG)			X	
Minot AFB, ND			X	
Misawa AB, Japan		X		
Moffett Fld., CA (ANG)				X
Moody AFB; Valdosta, GA (AETC)				X
Moron AB, SP		X		
Mountain Home AFB; Boise, ID			X	
Muniz Puerto/Rico IAP (ANG), San Juan, PR	X			
NAS Fort Worth, TX (ANG&AFRC)				X
NAS Keflavic, Iceland	X			
NAS New Orleans, LA (ANG&AFRC)				X
NAS Sigonella; Sicily, Italy		X		
NAS Souda Bay (Chania Apt.), Crete		X		
Nashville Met. Apt., TN (ANG)			X	
Nellis AFB; Las Vegas, NV				X
New Castle Co. Apt.; Wilmington, DE (ANG)				X
Newark AFS, OH			X	
Newburgh Apt., NY (ANG)				X
Niagara Falls IAP, NY (AFRC&ANG)			X	
North Truro AFS, MA			X	
Offutt AFB; Omaha, NE			X	
Onizuka AFS, CA (Sunnyvale)			X	

Table 6-3. Corrosion Severity Zones and Minimum Wash Interval - Continued

Location	Very Severe	Severe	Moderate	Mild
	Wash vehicle every 5 days	Wash vehicle every 15 days	Wash vehicle every 25 days	Wash vehicle every 45 days
Ontario IAP, CA			X	
Osan AB, S. Korea		X		
Otis ANGB; Falmouth, MA (ANG)			X	
Patrick AFB; Cocoa Beach, FL	X			
Pease ANGB; Portsmouth, NH (ANG)			X	
Peterson AFB; Colorado Springs, CO			X	
Phelps Collins ANGB, MI			X	
Pirinclik AB, TU	X			
Pittsburgh IAP, PA (AFRC&ANG)				X
Point Arena AFS, CA			X	
Pope AFB; Fayetteville, NC			X	
Port Austin AFS, MI – NO RECORDS			X	
Portland IAP, OR (ANG)				X
Prince Sultan AB; Al Kharj, SA				X
Quonset St. Apt; Providence, RI (ANG)			X	
RAF Akrotiri, Cyprus		X		
RAF Croughton, UK		X		
RAF Fairford, UK		X		
RAF Lakenheath, UK		X		
RAF Mildenhall, UK		X		
RAF Molesworth, UK		X		
Ramstein AB, GE		X		
Randolph AFB; San Antonio, TX (AETC)				X
Reese AFB; Lubbock, TX (AETC)				X
Reno/Tahoe IAP, NV (ANG)				X
Rhein-Main AB, GE			X	
Rickenbacker IAP; Columbus, OH (ANG)			X	
Riyadh, SA				X
Robins AFB; Warner Robins, GA			X	
Rosecrans Mem. Apt.; St. Joseph, MO (ANG)			X	
Salt Lake City IAP, UT (ANG)			X	
San Vito AS, IT				X
Savannah IAP/Travis Fld; Savannah, GA (ANG)			X	
Savannah Municipal Apt, GA			X	
Schenectady Co. Apt., NY (ANG)				X
Scott AFB; Belleville, IL			X	
Selfridge ANGB; Mount Clemens, MI (ANG)			X	

Table 6-3. Corrosion Severity Zones and Minimum Wash Interval - Continued

Location	Very Severe	Severe	Moderate	Mild
	Wash vehicle every 5 days	Wash vehicle every 15 days	Wash vehicle every 25 days	Wash vehicle every 45 days
Seymour Johnson AFB; Goldsboro, NC			X	
Shaw AFB; Sumter, SC			X	
Sheppard AFB; Wichita Falls, TX (AETC)				X
Sioux Gateway Apt.; Sioux City, IA (ANG)			X	
Sky Harbor Apt.; Phoenix, AZ (ANG)				X
Spangdahlem AB, GE		X		
Springfield-Bleckley Mun. Apt., OH (ANG)				X
Standiford Fld./Lvle. IAP; Louisville, KY (ANG)			X	
Suffolk Co. Apt., NY (ANG)		X		
Suwon AB, KO			X	
Tabuk, SA				X
Taegu AB, KO			X	
Thule AB, GRE				X
Tinker AFB; Oklahoma City, OK				X
Toledo Exp. Apt.; Swanton, OH (ANG)				X
Tonapah AFS, NV				X
Torrejon AB, SP			X	
Travis AFB; Fairfield, CA			X	
Truax Fld./Dane City Reg. Apt; Madison, WI (ANG)			X	
Tucson IAP, AZ (ANG)				X
Tulsa IAP, OK (ANG)				X
Tyndall AFB; Panama City, FL	X			
Vance AFB; Enid, OK (AETC)				X
Vandenberg AFB; Lompoc, CA		X		
Volk Fld Apt., WI			X	
Wake Island		X		
Westover ARB; Chicopee, MA (AFRC)				X
Wheeler AFB, HI			X	
Whiteman AFB; Knobnoster, MO			X	
Will Rogers IAP; Oklahoma City, OK (ANG)				X
Willow Grove ARS; Philadelphia, PA (AFRC/ANG)			X	
Wright-Patterson AFB; Dayton, OH			X	
Yeager Apt.; Charleston, WV (ANG)				X
Yokota AB, Japan			X	

Table 6-3. Corrosion Severity Zones and Minimum Wash Interval - Continued

Location	Very Severe	Severe	Moderate	Mild
	Wash vehicle every 5 days	Wash vehicle every 15 days	Wash vehicle every 25 days	Wash vehicle every 45 days
Youngstown-Warren Reg. Apt. ARS, OH (AFRC)			X	

Table 6-4. Galvanic Series of Metals and Alloys

ANODIC (High Corrosion Potential)
Magnesium Alloys
Zinc (plate)
Beryllium
Cadmium (plate)
Uranium (depleted)
Aluminum Alloys
Indium
Tin (plate)
Stainless Steel 430 (active)
Lead
1010 Steel
Cast iron
Stainless Steel 410 (active) Copper (plate)
Nickel (plate)
AM 350 (active)
Chromium (plate)
Stainless Steels 350, 310, 301, 304 (active)
Stainless Steels 430, 410 (passive)
Stainless Steels 13-8, 17-7, pH (active)
Brass, yellow, Naval
Stainless Steel 316L (active)
Bronze 220
Copper
Stainless Steel 347 (active)
Copper-Nickel 715
Stainless Steel 202 (active)
Monel 400
Stainless Steel 201 (active)
Stainless Steels 321, 316 (active)
Stainless Steels 309, 13-8, 17-7 pH (passive)
Stainless Steels 304, 301, 321 (passive)
Stainless Steels 201, 316L (passive)
Stainless Steel 286 (active)
AM355 (active)
Stainless Steel 202 (passive)
Carpenter 20 Stainless (passive)

Table 6-4. Galvanic Series of Metals and Alloys - Continued

AM355 (passive)
Titanium alloys
Silver
Palladium
Gold
Rhodium
Platinum
Carbon/Graphite
CATHODIC (Low Corrosion Potential)

6.17 FACTORS INFLUENCING CORROSION.

Factors that influence metal corrosion and the rate at which it occurs are outlined in this section. Both natural and man-made environments cause corrosion of vehicles. Natural conditions that affect the corrosion process are moisture, temperature, salt atmospheres, ozone, sand, dust, solar radiation, insects and birds, and microorganisms. Man-made conditions that affect the corrosion process are industrial pollution, manufacturing operations, storage conditions, and shipment. By understanding these conditions, maintenance personnel will be better able to prevent corrosion from initially occurring or minimize the impact of corrosion after it occurs.

6.17.1 Moisture. Moisture is present in air as a gas (water vapor) or as finely divided droplets of liquid (mist or fog) and often contains contaminants (such as chlorides, sulfates, and nitrates) that increase its corrosive effects. Moisture will enter all areas of vehicles that air can enter. All enclosed areas, that are not hermetically sealed, allow air to enter and leave as the difference in pressure between the inside and outside the equipment changes. These pressure differences occur when atmospheric pressure changes and when the air temperature inside an enclosed area changes. As the surrounding surfaces are heated, moisture-laden air is drawn into the enclosed area or absorbed in open cell foam. As the air around the equipment cools, moisture will condense in the enclosed areas and settle in the lowest area of the part.

6.17.2 Condensed Moisture. Condensed moisture will usually evaporate as the surrounding air warms but will leave behind its contaminants (residues), including salts. This can result in the build-up of soils and salt contamination. Condensed moisture and its contaminants can also be trapped in close fitting, wettable joints, such as faying surfaces. Some gasket and packing materials will absorb several times their weight in water and, when heated, can transmit this retained moisture into the sealed area. Moisture can accumulate in such areas through successive cycles of warming and cooling and cause corrosion on the interior of the part resulting in premature structural failure as shown in Figure 6-13.

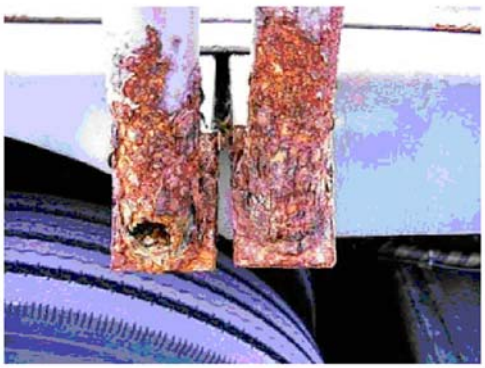

PN-TO36-1-191-113

Figure 6-13. Corrosion Accelerated by Condensed Moisture

6.17.3 Open Cell Foam. Open cell foam, see Figure 6-14, acts as a sponge-like material used mainly for sound suppression and insulation. Humidity, condensation, rainfall, cleaning wash water, etc., is absorbed into the foam and ultimately migrates to the mating metal surface to which it is attached. The absorbed moisture is very slow in drying out and provides the moisture/electrolyte against the metal surfaces. When possible, open cell foam should not be used. Closed cell types of foam may be suitable substitutes for this material and will not absorb moisture. If open cell foam is the only material suitable for your needs, prior to installation in the vehicles, seal all open cell surfaces with a polysulfide type sealant such as MIL-PRF-81733D. Also seal the sides of any perforations in the foam to prevent moisture absorption.

6.17.4 Salt Atmospheres. When dissolved in water, salt particles form electrolytes. The ocean, which is 3.5 percent to 3.9 percent salt, is the world's primary source of salt. Normal sea winds carry from 10 to 100 lbs of sea salt per cubic mile of air. Because dissolved salts are strong electrolytes, it is easy to understand why coastal environments are listed in the moderate to very severe corrosion prone categories.

6.17.5 Industrial Pollutants. Airborne pollutants that contribute to the deterioration of non metallic materials and severe corrosion of metals are: carbon (from internal combustion engine exhausts), nitrates (from agricultural fertilizers), ozone (from electrical motors and welding operations), sulfur dioxide (from engine exhaust and industrial and ship smoke stacks), and sulfates (from automobile exhaust).

6.17.6 Sand, Dust, and Volcanic Ash. Sand, dust, and volcanic ash are present in many areas, but particularly in industrial areas where they often contain a number of tar products, ashes, and soot. Dust is also found in tropical zones with plentiful rainfall and arid zones where there is little or no rainfall. Sand and dust are extreme problems in deserts because the wind carries dry, powdery sand and dust. During sandstorms, sand and dust can penetrate sealed equipment and many internal areas of vehicles. Sand, dust, and volcanic ash are hygroscopic and can absorb and hold moisture when present on internal or external surfaces of vehicles or electronic parts. Dust from volcanic areas contains chlorides and sulfates. Dust from desert areas may contain chlorides, carbonates, and sulfates. These materials are extremely corrosive in the presence of moisture. Although small amounts of sand or dust may be unnoticed by operating personnel, they may be sufficient to initiate and accelerate corrosion. Larger amounts of chloride or carbonate laden sand combined with moisture causes excessive corrosion, see Figure 6-15.

PN-TO36-1-191-114

Figure 6-14. Open Cell Foam and Resulting Corrosion

PN-TO36-1-191-115

Figure 6-15. Corrosion Resulting from Long-Term Exposure to Sand

6.17.7 Climate. Warm, moist air, typically found in tropical climates, tends to accelerate corrosion. Conversely, dry cool air, typically found in northern tier climates, tends to slow corrosion rates. Corrosion does not occur in very dry conditions. For this reason, desiccants are placed in shipping containers to create very dry local environments. The proposed operational and maintenance environments and established corrosion prevention and control processes shall be considered in military vehicle design and procurement.

6.17.8 Manufacturing. During the manufacture, assembly, or repair of vehicles, many factors can cause the introduction of corrosion. Use of unsuitable materials and improper materials processing can cause corrosion. Shearing or hole punching operations on some metal alloys, especially on high-strength aluminum, may create stresses that will lead to corrosion or provide a slight lip to inhibit complete drainage from an area. Raised edges of the hole-punching operations may cause incomplete drainage of electrolytes once the panels are installed. Assembly of parts in areas contaminated by fumes or vapors from adjacent operations may entrap fumes in the equipment, which might lead to future corrosion. Areas without humidity control may be sources of condensed moisture.

6.17.9 Microorganisms. Microbial induced corrosion is a result of the action of bacteria, fungi, or molds. Microorganisms are nearly everywhere and outnumber all other types of living organisms. Organisms that cause the most corrosion problems are bacteria and fungi. Damage from microbial growth can result from:

a. The tendency of the growth to hold moisture that causes corrosion.

b. Digestion of substrates as food for the microorganism.

c. Corrosion of the surface beneath the growth by secreted corrosive fluids.

6.17.9.1 Microbial attack can be prevented by applying moisture-proofing coatings to nutrient materials or by drying the interiors of compartments with desiccants. However, some moisture-proofing coatings are attacked by microorganisms, especially if they are used on contaminated surfaces. When dry, some microorganisms can survive in spore form for long periods and can become active when moisture is available.

6.17.9.2 When desiccants become saturated and unable to absorb the moisture passing into the affected area, microorganisms can begin to grow. Dirt, dust, and other airborne contaminants are the least recognized contributors to microbial attack. Unnoticed, small amounts of airborne debris may be sufficient to promote fungal growth. Slimes, molds, fungi, and other living organisms (some microscopic) can grow on damp surfaces and submerged surfaces. Their presence can cause the areas they occupy to have different oxygen and electrolyte concentrations. Additionally, the organisms may secrete corrosive wastes causing actual perforations of the metal surfaces, see Figure 6-16.

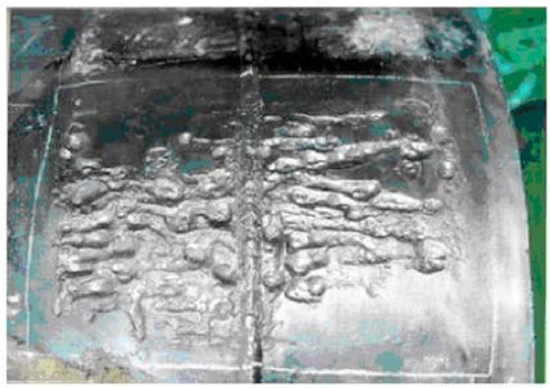

PN-TO36-1-191-116

Figure 6-16. View of Microbial Induced Corrosion

6.17.10 Mechanical Stress. Manufacturing processes such as machining, forming, welding, or heat treatment can leave stresses in vehicle parts. Almost all alloys in vehicle construction are sensitive to a form of corrosion known as stress corrosion cracking. This residual stress causes corrosion to proceed more rapidly in structurally important regions of the part until failure occurs.

PN-TO36-1-191-117

Figure 6-17. Corrosion on Weldments

6.17.11 Welded Areas. Welded areas are naturally corrosion prone locations, see Figure 6-17. The welding process modifies the surrounding metal surfaces exposing bare edges of metal to welding fluxes and other contaminants. The immediate weldment areas contain a mixture of different SAIC metals and alloys. The combination of the modified parent metal structure and the welding fluxes require the welded bead area to be properly prepared before coating. Abrasive blasting is the preferred method of cleaning weld nugget/beads. At a minimum, the weld nuggets/beads should be thoroughly cleaned with a stiff wire brush to remove any surface contaminants.

6.17.12 Time. As time goes on, metals naturally tend to corrode. In some cases, the corrosion process occurs at the same rate, no matter how long the metal has been exposed to the environment. In other cases, corrosion can decrease with time (because of the barrier formed by corrosion products) or increase (if a barrier to corrosion is being broken down).

6.17.13 Preventive Maintenance (PM). PM is probably one of the easiest, most effective and least expensive means of preventing corrosion and is the process organization maintenance personnel can control.

6.17.13.1 The earlier that corrosion is detected and treated will determine the effectiveness of a corrosion PM program. When corrosion is detected, a specific and immediate program for corrective treatment is required.

6.17.13.2 Each type of corrosion has its own peculiarities and will require special treatment. Complete treatment involves thorough inspection of all corroded areas, evaluation of the corrosion damage, paint and corrosion removal, application of chemical surface treatments, sealing, and application of protective finishes.

6.17.13.3 Normally, aluminum, steel, and magnesium alloys found in vehicle equipment will begin to corrode if salt deposits, corrosive fluids, or other electrolytes are allowed to accumulate and remain on the metal surface. In order to effectively prevent corrosion an established frequent cycle of cleaning, inspection, preservation, and lubrication must be followed.

6.17.13.3.1 Corrosion can be minimized by frequent washing because in many cases the severity of corrosion depends on the length of time electrolytes are in contact with metals. If a Qualified Product Listed (QPL) cleaning compound and additives are used, frequently cleaning a surface will reduce the likelihood of corrosion. Prompt detection and removal of corrosion will limit the extent of damage to the vehicle or vehicle components.

6.17.13.4 A typical PM program should include personnel trained in corrosion identification, prevention, effective removal, chemical treatment, paint removal, sealing, and repainting. An effective PM program also includes:

6.17.13.4.1 Proper vehicle washing and cleaning cycle based on the corrosion severity zone the equipment operates in.

6.17.13.4.2 Daily cleaning or wiping down of all exposed unpainted surfaces such as actuating rods of hydraulic cylinders.

6.17.13.4.3 Keeping all drains open, and low-lying areas dry.

6.17.13.4.4 Initial use, inspection, and reapplication of CPCs following vehicle washing, repairs, and component replacement.

6.17.13.4.5 Early detection and repair of corrosion and damaged protective coatings and sealants.

6.17.13.4.6 Sealing gaps, seams, and holes to prevent moisture entry. This is especially important around spot-welded areas.

6.17.13.4.7 Application/reapplication of sealants following vehicle repairs and component replacements.

6.17.13.4.8 Awareness of corrosion during regular maintenance activities (while performing daily repairs and maintenance tasks, always look for signs of corrosion or corrosion damage).

6.17.13.4.9 Track causes of initial corrosion to the source and eliminate the source.

6.17.13.5 Vehicle cleaning is the first step in preventing corrosion by removing salt deposits, corrosive fluids, materials that collect and hold moisture, and other electrolytes. As mentioned earlier, vehicle should be washed based on the corrosion severity zone the equipment operates in.

6.17.13.6 In some situations, cleaning and washing should be done immediately. Immediate cleaning is required when:

6.17.13.6.1 Spilled electrolytes or other corrosive deposits are found around batteries, battery terminals, or the battery compartment.

6.17.13.6.2 The vehicle or any components are exposed to corrosive fire extinguishing agents.

6.17.13.6.3 Salt deposits or other corrosive contaminants are found. Of special concern would be the lowest level of the equipment where salt-laden water or condensation will drain to. This area is usually the last area to dry. Unless regularly rinsed with clean, potable water, the salt and other contaminants will achieve a greater concentration and be more corrosive.

6.17.13.6.4 The vehicle is exposed to significant amounts of saltwater.

6.17.13.6.5 Fungus or other organism growth is apparent.

CHAPTER 7
VEHICLE DEFICIENCIES AND WARRANTIES

7.1 PURPOSE.

This chapter establishes procedures for identifying, reporting, and tracking deficiencies and warranties on Air Force motor vehicles/equipment, and the components, major assemblies and/or subassemblies of the same. It outlines responsibilities and procedures for reporting vehicle deficiencies through the USAF Materiel Deficiency Reporting and Investigating System (refer to TO 00-35D-54 for system operation).

7.2 SCOPE.

These procedures and requirements apply to all USAF vehicle management activities.

7.3 CHAPTER ORGANIZATION.

7.3.1 Introduction - Addresses purpose, scope, and organization of this technical order.

7.3.2 Deficiency Reporting Procedures - Addresses report classifications, definitions, submitting activity responsibilities, report routing and time frames.

7.3.3 Warranty Procedures - Addresses warranty coverage exceptions, communications, report classifications, definitions, submitting activity responsibilities and report routing.

7.3.4 Materiel Deficiency Report (MDR) - Addresses warranty report classification, submission criteria, reporting procedure and routing for MDRs only.

7.3.5 Vehicle Unsatisfactory Report (VUR) - Addresses report classification, submission criteria, reporting procedure and routing for VURs only.

7.3.6 Materiel Deficiency Exhibit - Addresses responsibilities, time frames, forms documentation and procedures for holding/disposing of a deficient part.

7.3.7 Vehicle Improvement Working Group (VIWG) - Addresses responsibilities, composition, purpose and procedures of the working group.

7.4 INTRODUCTION.

This chapter establishes procedures for identifying, reporting and tracking deficiencies on Air Force motor vehicles/equipment, the components, major assemblies and/or subassemblies of the same. Additionally, it establishes and defines the responsibilities for initiation, submission, certification, and other management actions.

7.5 DEFICIENCY REPORTING SCOPE.

The deficiency reporting procedures in this chapter apply to all USAF vehicle management activities and affiliated agencies for which USAF has support responsibility.

7.6 DEFINITIONS.

7.6.1 Deficiency Report (DR). A generic term for all Deficiency Reports (MDR, VUR, AWR, IWR).

7.6.2 Originator. The originator (previously referred to as the Originating Point) is an individual or section within a Vehicle Management activity that identifies a deficiency and prepares the draft report. The section supervisor is normally the Originating Point.

7.6.3 Originating Point. The Originating Point (previously referred to as the Screening Point) is an individual within Vehicle Management and Analysis who performs all administrative actions, tracking and necessary follow-up and finalizes the report for the certifying official. The Originating Point will use the Deficiency Reporting and Mail System (DREAMS) to perform these functions.

7.6.4 Screening Point. The Screening Point (previously referred to as the Contact Point) is the ALC office which receives reports, assigns Materiel Improvement Projects (MIPs), and monitors the appropriate action. (580 CBSS/GBL) (SA-ALC/LPRO) (OO-ALC/PMDAQ) (OC-ALC/LIMQ) (SM-ALC/TILE).

7.6.5 AF Action Point. The AF AFLC action point responsible for resolving the deficiency.

7.7 DEFICIENCY TYPES.

7.7.1 Design Deficiency. A condition that limits or prevents the use of the vehicle for the purpose intended. These conditions cannot be corrected except through a design change.

7.7.2 Maintenance Deficiency. A condition which results in excessive maintenance man-hour expenditures.

7.7.3 Materiel Deficiency. A failure of a major assembly, subassembly, or component, that if uncorrected, may cause death, injury or severe occupational illness; or would cause loss or damage to a vehicle.

7.7.4 Quality Deficiency. Errors in workmanship, nonconformance to specifications, or other technical requirements. Failures or malfunctions which cannot be attributed to errors in workmanship will not be reported as quality defects.

7.8 REPORT CATEGORIES.

7.8.1 Materiel Deficiency Report (MDR). This report is required when conditions occur which may cause death, severe injury or occupational illness; would cause loss or damage to a vehicle; or directly restrict the combat readiness capability of the using organization.

7.8.2 Vehicle Unsatisfactory Report (VUR). This report is required when a vehicle does not meet the user needs; a vehicle's design, depot repair or remanufacture is unsatisfactory; or premature materiel failure or equipment malfunction occurs that does not meet the criteria for a MDR.

7.8.3 Action Warranty Report (AWR). This report is required on all vehicles/equipment when the contractor refuses to make corrections under warranty (refer to Paragraph 7.25.1.2 for reporting procedures).

7.8.4 Info Only: Warranty Satisfactory Report (IWR). This report is required for all vehicles/equipment when the manufacturer/contractor satisfactorily corrects the deficiency in a timely manner and value of the repairs exceeds $1000.00 or when three or more vehicles have the same deficiency satisfactorily corrected regardless of cost (refer to Paragraph 7.25.1.1. for reporting procedures).

7.9 GENERAL.

7.9.1 Certifying Official. VFM/VMS or designee will certify the accuracy of and release reports for transmission.

7.9.2 Materiel Improvement Project (MIP). A MIP is a planned effort to investigate and resolve deficiencies or to evaluate proposed enhancements.

7.9.3 MDR Exhibit. Items of hardware or samples of material or products.

7.9.4 MDR Exhibit Holding Activity. The unit holding the MDR exhibit pending disposition instructions.

7.9.5 Warranty Items. Items which are guaranteed by the manufacturer or rebuilder.

7.10 GENERAL PROCEDURES.

7.10.1 All MDR reports will be transmitted within 72 hours of identification.

7.10.2 All other reports will be transmitted within 15 days of identification.

7.11 METHOD OF REPORTING.

All reports will be submitted using DREAMS. MDRs and AWRs will be submitted directly to the GO21 database with an informational copy to the appropriate MAJCOM. Information warranty reports will be e-mailed to the MAJCOM with an informational copy to WR-ALC. The MAJCOMs will provide a specific e-mail address to their bases for these reports. The WR-ALC addresses can be found on their web page at https://sevpgm.robins.af.mil/vehicle/default.asp. See Figure 7-1 for a sample DREAMS document.

7.12 CONTROL AND COMMUNICATION.

7.12.1 VM&A will establish a file in accordance with AFMAN 37-123. This file will be used to store all correspondence, pictures and back-up data for each open MIP being tracked by their activity.

7.13 PURPOSE.

This chapter provides general warranty information, and outlines responsibilities and procedures for obtaining warranty adjustments. It has been coordinated with government fleet managers and applicable automotive manufacturers.

7.14 GENERAL WARRANTIES.

7.14.1 The Air Force normally purchases new vehicles with a manufacturer's warranty for correction of deficiencies during the initial use period. Warranties have been paid for and must be used where economically feasible. The VFM will exercise options of this technical order to prevent excessive Non-Mission Capable times on low cost warranty repairs.

7.15 RESPONSIBILITIES.

7.15.1 The installation vehicle fleet manager will:

7.15.1.1 Initiate action for correction of deficiencies occurring during the warranty period.

7.15.1.2 Submit warranty reports in accordance with AFI 23–302 and this chapter to document warranty actions in excess of $1000.00 or when three or more vehicles have the same deficiency satisfactorily corrected regardless of cost.

7.15.1.3 File all warranty transaction documentation in the temporary portion of the historical record jacket. Dispose of them in accordance with Air Force Records Disposition Schedule (AFRDS) at https://afrims.amc.af.mil/rims.cfm.

7.15.2 580 CBSS/GBL will:

7.15.2.1 Act as single Air Force agency for vehicle warranty management.

7.15.2.2 Assist installation VFM in obtaining warranty services.

7.15.2.3 Perform actions required in connection with the Department of Transportation Manufacturer Defect Recall Program. This will include user notification

7.16 COMMUNICATION.

Direct contact by the VFM with the manufacturer's branch, dealer, or designated representative is authorized for correction of warranty deficiencies. If problems are encountered, follow the procedures outlined in Paragraph 7.21. To locate the dealer or manufacturers refer to the owner's manual, -1 technical order, world wide web, or contact 580 CBSS/GBL by message or telephone.

7.17 WARRANTY COVERAGE.

Vehicles are procured from various manufacturers under contracts which may include different warranty clauses which are subject to change from year to year. Written warranties are provided with each vehicle either in booklet form or decal displayed on the vehicle. If warranty provisions are unclear, contact 580 CBSS/GBL.

7.17.1 Basic Warranty Coverage. The contractor shall warrant the vehicle and furnished equipment against parts failure or malfunction due to design, construction, or installation errors, defective workmanship, and missing or incorrect parts (exceptions, see Paragraph 7.18) for a minimum period of 12 months and 15 months for vehicles outside the contiguous (48) United States from date of acceptance, or 12,000 miles of operation, exclusive of any accumulated drive away mileage, whichever occurs first. Warranty coverage shall include any defects or shortcomings under Paragraph 7.17. The warranty begins when the Government accepts the vehicle from the contractor FOB point of origin/destination.

7.17.2 Extended Coverage. In addition to the basic coverage, the contractor shall provide chassis manufacturer's commercial powertrain/component warranty. This coverage shall be for at least three years from date of acceptance or 50,000 miles, exclusive of accumulated drive away mileage, whichever occurs first. This coverage applies only to domestic use. General Motors, Ford and Chrysler have agreed to extended coverage for parts only for those vehicles procured by WR-ALC that are used outside the 50 states of the United States.

7.17.3 Corrosion Coverage. The contractor shall provide the chassis manufacturer's commercial corrosion coverage. This coverage shall be for at least 5 years/100,000 miles. General Motors, Ford and Chrysler have agreed to extended coverage for parts only for those vehicles procured by WR-ALC that are used outside the 50 states of the United States.

7.17.4 Emission Control System. The contractor shall provide a warranty, in conformance with applicable regulations of the Federal Environmental Protection Agency and the California Air Resources Board, that covers emission control related parts which will be replaced, repaired, or adjusted if there is a defect in a covered part that causes the vehicle to fail to conform to regulations for five years or 50,000 miles whichever occurs first. Some components (such as distributor, sparks plugs, ignition wiring, and manifolds) are excluded if over 24 months or 24,000 miles and their primary purpose is not to reduce vehicle emissions. Some items may require scheduled replacement and are only warranted up to the first replacement interval. This coverage applies only to domestic use.

7.17.5 Domestic Use. When vehicles are used within the 50 states of the United States, the District of Columbia and when applicable, Puerto Rico and the Virgin Islands, the warranty shall include the furnishing, without cost to the Government, (FOB contractor's nearest dealer or branch to vehicles location or station) new parts and assemblies to replace any that failed or malfunctioned within the warranty period. In addition, when the Government elects to have the work performed at the contractor's plant, branch, dealer, or with the contractor's approval: (I) To correct the supplies itself or (II) to have them corrected by a commercial garage facility, the cost of the labor involved in the replacement of the failed or malfunctioned parts or assemblies shall be borne by the contractor.

DR

006

■ : Required entry

double-click for lookup

USAF Deficiency Report

For Vehicle Maintenance

DREAMS I Version 5.0

Report Control Number (i80)■	Type Deficiency (i550)	Report Category (i60)■ ☐ Cat I ☒ Cat II	Category Priority (i63)
Date Deficiency Discovered (i120) ■	Subject - VehicleType and Deficient Component (e.g.: P-23; Wheel Hub) (i20) ■		
Operational Impact to Users' Mission (i61)			

Reporting Activity Points of Contact

Technician's Name (i52)	Technician's Email Address (i52)
Technician's Organization (i49)	Technician's Phone Number DSN: Comm:
VM&A Point of Contact (Name/Rank) (i57)■	VM&A Office Email Address (i58) ■
VM&A Organization (i55)■	VM&A Phone Number ■ DSN: Comm:
Installation/Base (i50)	MAJCOM/Activity Code (i370) ■ Country (i380) USA

Mishap DR Info

Safety Officer/Phone Number (i446)	Safety Officer Email (i448)
Estimated Repair Cost (i315)	Mishap/HAP Number (i90)

Deficient Item/Exhibit

Nomenclature (i110) ■	NSN (i100) ■
Manufacturer's Part Number (i170)	Job Control Number (i365)

Unit Cost (i310)	QLVIMS Code (i330)	Serial/Lot/Batch Number (i180)

Item New or Repaired/Overhauled (i210) -- Fill in only the line that applies

☐ New/OEM	Manufacturer (i140)	Manufacter (CAGE) Code (i150)	Date Manufactured (220)
☐ Repaired/ Overhauled	Depot Overhaul/Repair Source (i145)	Overhaul/Repair CAGE Code (i155)	Repair Overall Date (i220)

M/H/K Time of Failure (i230)	Unit Type (hours, miles, kilometers, etc.) (i232)

Item Under Warranty (i320) Check one

☐ Yes – Warranty Expiration Date (i1440): ☐ No ☐ Unknown

MILSTRIP Requisition Number (i200)	Vehicle Contract Number (i190)

Quantities: Number of Like Vehicles Assigned (i266): Number of Like Vehicles Inspected (i268): Number of Deficient Vehicles or Components (i270):

PN-TO36-1-191-118

Figure 7-1. Deficiency Report (Sheet 1 of 2)

Exhibit Holding Status (i430) ◙ Check one

Exhibit Available — Holding Activity Address/Email (i440)

☐ Exhibit available, holding exhibit for 30 days

No Exhibit available - Reason:

☒ Returned to stock or disposed of ☐ Repaired ☐ Exhibit Not Applicable ☐ Other *(Explain in i340 block)*

Deficient Item Works on or with

Vehicle Make and Model (i230) ◙	Vehicle Management Code (i295)	Deficient Vehicle Registration Number. (i290)

NHA Nomenclature (i302)	NHA NSN (i300)
NHA Part Number (i304)	NHA Serial Number (i306)

Details/Problem Summary (i340) ◙

Circumstances prior to difficulty:

Description and cause of difficulty:

Action taken / recommended:

Technical Information / TO#.

Additional Information:

Description and cause of difficulty:

☐ Credit; ☐ Replace, No credit;: ☐ Repair and Return, No Credit; ☐ Info Only; and/or Other (Explain)

PN-TO36-1-191-119

Figure 7-1. Deficiency Report (Sheet 2)

7.17.6 Foreign Use. When vehicles are used outside the 50 states of the United States, the District of Columbia, and when applicable Puerto Rico and the Virgin Islands, the warranty shall include the furnishing of new parts or assemblies to replace any returned to the contractor by the Government which failed or malfunctioned within the warranty period. The replacement parts or assemblies shall be delivered by the contractor to the port of embarkation in the United States designated by the Government. Required port of embarkation and priority are identified to the contractor by means of the claim letter and Military Shipment Label, DD Form 1387, as specified in Paragraph 7.22.2.4. In addition to warranty parts identified by the user, contractors often identify deficiencies through factory recall or service bulletin programs. Contractors will often request an address for shipping the parts to an overseas location. VFMs are reminded of possible problems with delayed shipments due to customs restrictions. Providing the contractor with a Military Shipment Label, DD Form 1387, may be necessary should priority shipment be required. The contractor shall not be required to bear the cost of the labor involved in correcting defects in vehicles operated in foreign countries.

7.17.6.1 Delayed Delivery Warranties. To provide additional/extended warranty, based on the in-service date, for vehicles being shipped overseas. Delayed delivery forms may be used by the user to annotate the actual delivery/in-service date in which vehicles are placed in service. User should fill out all appropriate information and return form to address listed at the bottom of the form. See Figure 7-2 thru Figure 7-3 for delayed delivery forms for the big three manufacturers. Mailing address are as follows:

General Motors Address:	GM Delayed Warranty Start PO Box 51850 Livonia, MI 48150
Ford Motor Company:	Ford Motor Company Ford Customer Service Division PO Box 43392 13th Floor 300 Renaissance Center Detroit, MI 48243
Chrysler Corporation:	Chrysler Corporation Warranty Registration Dept. 423-17-02 PO Box 242 Detroit, MI 44288

7.17.7 Warranty Extensions. If the contractor receives from any supplier or subcontractor additional warranty coverage on the whole or any component of the vehicle, in the form of time and/or mileage including any pro rata arrangements, or the contractor generally extends to his

commercial customers a greater or extended warranty coverage, including anti-corrosion, the government shall receive corresponding warranty benefits.

7.17.8 Special purpose vehicles procured under Air Force specifications by the Air Force and/or Defense Construction Supply Center are warranted for 12 months from date of acceptance. Defective parts or assemblies determined to be covered by warranty will be replaced at no cost to the government. Shipping costs for replacement items will be the responsibility of the contractor, except to bases outside the CONUS, in which case the contractor will pay shipping costs to the port of embarkation designated by the government. In the event it is necessary to return defective parts/components to the contractor for inspection, shipping costs will be borne by the activity requesting warranty. Commercial chassis on which special purpose equipment is mounted will have the same warranty as previously outlined for commercial vehicles.

7.17.9 Warranty for Trailers. Due to the wide latitude in warranty coverage furnished by various commercial trailer manufacturers, blanket instructions cannot be developed. Normally, trailer components such as landing gears, suspension systems. and brake systems are covered by warranty for 90 days and will be reported direct to individual component manufacturers or local dealers. Failures and/or problems encountered on basic trailers are normally covered by a one-year warranty against faulty material and/or workmanship. Problems of this type will be reported to the local dealer or manufacturer's office when dealers are not available. If assistance is required, contact 580 CBSS/GBL.

7.18 WARRANTY EXCEPTIONS.

7.18.1 Tires and Batteries. The basic vehicle warranty does not cover tires and batteries. These items are warranted by the tire and battery manufacturers under their own warranty provisions. Warranty provisions are largely dependent upon method of procurement. The following information is provided to assist vehicle management managers in handling warranty adjustments when applicable.

7.18.1.1 Original Tires/Batteries Provided with New Vehicles. The normal commercial warranty (commercial/fleet/industrial provisions, if separately stated) is furnished on tires and batteries procured with new vehicles. Whenever possible and practical, tires and batteries should remain on original vehicle until replacement is required. If warranty action is indicated and if the tire/battery has remained on the original vehicle, process a warranty claim through the Contract Repair Service Activity for warranty adjustments from the nearest local dealer/manufacturer of defective tires/batteries. An AF Form 9 citing estimated funds for prorated exchange price should accompany the property.

7.18.1.2 Normally, replacement tires obtained through U.S. Army Tank-automotive and Armaments Command (TACOM) contain no provisions for warranties, unless specifically advised of, and no specific records are required.

7.18.1.3 Locally Procured Tires, Batteries and Retreading Service. Warranty adjustments should be processed per terms of contract. Normally the standard commercial warranty will apply.

7.18.2 Maintenance not Covered by Warranty. Unless caused by defective material or workmanship, the manufacturer will not perform warranty corrections for the following, regardless of vehicle age and mileage:

7.18.2.1 Repair requirements resulting from manufacturer-approved parts not being used (except in emergency cases approved by the manufacturer.

7.18.2.2 Abuse, negligence, or alteration of original parts or adjustments.

7.18.2.3 Engine tune-up or related cleaning or adjusting operations, including maintenance to comply with government emission control standards.

7.18.2.4 Service and parking brake adjustments/lining replacements.

7.18.2.5 General tightening.

7.18.2.6 Headlight adjustments.

7.18.2.7 Wheel aligning or tire balancing.

7.18.2.8 Materials required in servicing or repairing such as oil, grease, brake fluid, antifreeze, filter elements or drive belts.

7.18.2.9 Labor for installation of accessories not ordered on vehicles.

7.18.2.10 Miscellaneous expense such as gasoline, towing, telephone, rental vehicle, lodging, loss of personal property, or sales tax.

NOTE

The manufacturer's dealer may bill the Air Force for nonwarranty materials or adjustments used in conjunction with warranty repair. To avoid such charge, a clear understanding (documented on the repair ticket, if necessary) should be achieved with the dealer to prohibit adjustments or use of materials not covered by warranty. The Air Force should provide oil, grease, brake fluid, antifreeze, etc. not covered by warranty that are required in completing the warranty repair. If unforeseen nonwarranty repairs are accomplished in conjunction with warranty repair, the billing and an explanation should be immediately forwarded to the local Air Force Procurement Officer.

7.18.3 Nonwarranty Period Adjustments. The manufacturer's warranty adjustment policies are not necessarily confined to the warranty period. (Malfunction or parts failure discovered at some point beyond the warranty period, attributed to a manufacturing defect, may be corrected at no cost or on a cost-sharing basis, depending upon the individual case.)

7.18.4 Tactical Vehicle Warranty. Tactical vehicles of military design (M-series) are often procured through TACOM without a normal commerical warranty. The absence of an overall commercial vehicle warranty, however, does not negate claims for correction of material deficiencies or defective workmanship. When premature defect can be attributed to a manufacturing defect, submit a Vehicle Unsatisfactory Report (VUR) in accordance with provisions of this technical order.

NOTE

CUCVs carry a special warranty. To obtain warranty repair on CUCV vehicles, refer to TO 36A12-1A-2081-1 for procedures.

DATE _____

NOTIFICATION OF DELAYED DELIVERY DATE OR IN-TRANSIT MILEAGE ACCUMULATION

This form is to be used to notify Ford Motor Company of a delayed warranty start date or to report an in-transit mileage accumulation on a vehicle driven (not transported) from the assembly plant to the receiving location.

VEHICLE IDENTIFICATION NUMBER

NAME AND ADDRESS OF RETAIL SELLER

RETAIL SELLER'S NAME

ADDRESS CITY STATE ZIP

NAME AND ADDRESS OF RETAIL BUYER

FIRST INITIAL SECOND INITIAL LAST NAME ONLY

STREET ADDRESS

CITY OR TOWN STATE ZIP CODE

RETAIL BUYER'S SIGNATURE

This section of the form is to be used to notify Ford Motor Company of a delayed warranty start date.

WARRANTY START DATE REQUESTED

MONTH DAY YEAR

MILEAGE AT TIME OF DELIVERY TO RETAIL SELLER

(NO TENTHS)

MILEAGE AT TIME OF RETAIL SALE

REASON FOR DELAY OF WARRANTY START DATE

Please attach copies of documents to support warranty start date. (for example: new vehicle sales invoice or state registration.)

NOTE: When this section of the form is completed, submit IMMEDIATELY to Ford Motor Company with supporting documentation attached.

This section of the form is to be used to notify Ford Motor Company of an In-transit mileage accumulation.

MILEAGE AT TIME OF DELIVERY TO RETAIL SELLER

(NO TENTHS)

MILEAGE AT TIME OF RETAIL SALE

(NO TENTHS)

REASON FOR IN-TRANSIT MILEAGE ACCUMULATION

Please attach documents to support accumulated mileage.

NOTE: When this section of the form is completed, DO NOT submit to Ford Motor Company unless a repair is required beyond warranty but within the mileage extension period.

FCS-900 11/98

PREVIOUS EDITIONS MAY NOT BE USED

MAIL TO:
FORD CUSTOMER SERVICE DIVISION
P.O. BOX 1597
DEARBORN, MI 48121

PN-TO36-1-191-120

Figure 7-2. Delayed Delivery Form - Ford Motor Company

GENERAL MOTORS DELAYED WARRANTY START

General Motors Vehicle Information

Vehicle Identification Number

(GM VIN, ALL 17 CHARACTERS) | | | | | | | | | | | | | | | | | |
1 2 3 4 5 6 7 8 9 10 11 12 13 14 15 16 17

Vehicle Date *: ___/___/___ Odometer Reading*: _____ .X (NO TONS) Check if Isometers ☐

Vehicle Application: RV Political Subdivision Commercial Coach
(CIRCLE ONLY ONE)

*Date odometer reading at first retail sale updated (special body / equipment) recreational, commercial or coach vehicle

– or –

*Date, odometer reading when vehicle is placed in service by a GM authorized seat or political subdivision.

Customer Information

Customer Name: _____

Business/
Political Subdivision _____

Address: _____ / _____ / _____ / _____
STREET CITY STATE/ PROVINCE ZIP/ POSTAL CODE

Phone: (AREA) _____ – _____

Customer Signature: _____ Date: ___/___/___

Sales Information

GM Dealer / Retailer Code _____ – _____

Retail Outlet:

Address: _____ / _____ / _____ / _____
STREET CITY STATE/ PROVINCE ZIP/ POSTAL CODE

Phone: (AREA) _____ – _____

Retail Outlet / Dealer Signature: _____ Date: ___/___/___

Reason for Delayed Warranty Start:

_____

This form is to be completed, signed and mailed to:

GM DELAYED WARRANTY START
P O BOX 51850
LIVONIA MI 45750

- Send one copy to PO BOX above, provide one copy to customer, place one copy in your file. -

March 97

PN-TO36-1-191-121

Figure 7-3. Delayed Delivery Form - General Motors Company

MICRO NO.

CHRYSLER MOTORS

U.S. GOVERNMENT VEHICLE LIMITED WARRANTY REGISTRATION CARD

This form is to be used to establish the correct delivery (warranty start date).

Chrysler's Limited Warranty is included with each vehicle - unless otherwise specified.

Complete this form, accurately and legibly, when vehicle is received. mail #2 copy as addressed. When requesting service from an authorized Chrysler Dealer, the #1 copy is to be presented for verification of the-service date.

CHRYSLER VEHICLE IDENTIFICATION NUMBER (VIN)

DELIVERY DATE

(Month) (Day) (Year)

CONTRACT NUMBER

ITEM NO

U.S. ARMY REGISTRATION NO.

NAME AND ADDRESS OF GOVERNMENT AGENCY

STREET ADDRESS

CITY STATE (PROV)

MILEAGE AT DELIVERY

(Exclude 10ts)

NO POSTAGE NECESSARY IF MAILED IN THE UNITED STATES

BUSINESS REPLY MAIL

FIRST CLASS PERMIT NO. 9941 DETROIT, MI.

POSTAGE WILL BE PAID BY ADDRESSEE

CHRYSLER CORPORATION
WARRANTY REGISTRATION DEPT. 423-17-02
P.O. BOX 242
DETROIT, MI. 48288

PN-TO36-1-191-122

Figure 7-4. Delayed Delivery Form - Chrysler Corporation

7.19 POST DELIVERY SERVICES AND INSPECTIONS.

Vehicle warranties do not provide for 1,000 mile or other post delivery inspections. Government vehicles are procured in a ready-to-run status and all necessary predelivery inspections are required to be made at the contractor's plant prior to shipment. Any vehicle received which is not in a ready-to-run condition should be reported to 580 CBSS/GBL and warranty repairs pursued.

7.20 DELIVERY CONDITION.

In transporting/delivering the vehicle, some systems may not be filled to capacity; additions of OEM-recommended coolants and oil usually will be necessary. Normally, the vehicle will be ready to operate; however, Air Force agencies are required to perform an acceptance inspection to identify safety and mechanical defects, prior to placing the vehicle in service (i.e., chaffing hoses, belts, and lines and hoses against the exhaust systems). Minor adjustments, when required, should be accomplished by the base vehicle management activity; however, if serious discrepancies are detected, such as incorrect tire size, incorrect, missing, or malfunctioning components or body leaks, arrangements should be made for prompt correction by the local dealer. To secure reimbursement from the appropriate manufacturer, the dealer will need

the contract number, USAF registration number, serial number and mileage.

NOTE

When new vehicle(s) is/are delivered to destination and show damage, abuse, or missing equipment on arrival, obtain proof of the discrepancies from the carrier, and arrange for immediate repair of such vehicle(s) at the nearest manufacturer's authorized dealer or such place as authorized by the manufacturer's zone district or regional office or factory branch. The damage, abuse, or missing equipment must be noted on all copies of the waybill or shipping document, signed by the carrier, and a copy given to the dealer. If warranty repair cannot be arranged with the dealer, the discrepancies should be reported to the LRS Distribution Flight and processed in accordance with DOD 4500.9R Part 2 or DFASREG.

7.21 SPECIAL WARRANTY PROCEDURES WITHIN THE 50 STATES OF THE UNITED STATES AND THE DISTRICT OF COLUMBIA.

Generally, warranty correction within the 50 states of the U.S. and the District of Columbia is performed at the local manufacturer's or dealer facility. Some remote geographic locations and emergency situations require special handling as follows:

7.21.1 Air Force Warranty Corrections with Reimbursement.

7.21.1.1 In locations which are quite distant from franchised dealer shops, the manufacturer may agree to reimburse the government for corrections made under warranty provisions. Proper approval must be obtained from the manufacturer before such corrections are made. 580 CBSS/GBL, 295 Byron Street, Robins AFB, GA 31098, upon request, will assist in establishing such agreements.

7.21.1.2 Typical statements of provisions under which such an agreement might be made are as follow:

7.21.1.2.1 A labor rate is established between the government shop and the vehicle manufacturer's representative.

7.21.1.2.2 Time allowances for each repair is based upon the vehicle manufacturer's flat rate manual for the particular make, model, and year.

7.21.1.2.3 Reimbursement segment for parts is based on current factory list prices less discounts quoted in the manufacturer's price lists.

NOTE

The manufacturer may prefer to evaluate each case.

7.21.2 Independent (Non-Dealer) Garage Warranty Corrections.

7.21.2.1 Prior approval must be obtained from the manufacturer's zone, district, or regional service manager for corrections made by independent garages. Reimbursement of warranty expenses incurred at non-dealer garages will be considered by the manufacturer in the following instances:

7.21.2.1.1 Emergency repairs are necessary in a location where the manufacturer is not represented.

7.21.2.1.2 Emergency repairs are necessary during periods other than dealer's normal business hours.

7.21.2.2 The manufacturer's reimbursement to the government will be based on the following:

7.21.2.2.1 The manufacturer's flat rate time schedule.

7.21.2.2.2 The labor rate charged at the nearest franchised dealer for that make vehicle.

7.21.2.2.3 All parts and major assemblies in the manufacturer's price lists.

NOTE

If the non-dealer shop's invoice is less than the combination of Paragraph 7.21.2.1.1 and Paragraph 7.21.2.1.2, the manufacturer will reimburse the lesser amount.

7.21.3 Conditional Warranty Corrections. The manufacturer will authorize warranty corrections at the nearest independent garage when it is determined that the nearest authorized dealer is located at a point too distant to economically transport the vehicle(s) to and from such facility land is not in the best interest of the government. The authorization by the manufacturer will be based on the following conditions:

7.21.3.1 Prior approval for the warranty corrections has been granted by the manufacturer.

7.21.3.2 The manufacturer designates the independent garages, if used.

7.21.4 Air Force Repair of Warranty Covered Vehicles without Reimbursement. If special handling, as outlined in Paragraph 7.17.1 through Paragraph 7.17.3 above cannot be used, the VFM may elect to repair a vehicle covered by warranty in an Air Force shop if the cost of the repairs is less than the cost of transporting the Vehicle to and from the warranty facility.

7.21.5 Air Force Emergency Repair of Warranty Covered Vehicles. The VFM may repair a vehicle covered by warranty in an Air Force shop if the time needed for correction of the defect by the contractor (under warranty) would result in mission impairment.

7.22 WARRANTY PROCEDURES OUTSIDE THE LIMITS OF THE 50 UNITED STATES AND THE DISTRICT OF COLUMBIA.

Generally, warranty corrections outside of the 50 United States and the District Columbia (overseas areas) includes furnishing of new parts and assemblies to replace those defective ones returned to the contractor by the Air Force. However, in some areas many dealers or representatives of U.S. manufacturers will honor warranties in the same manner as in CONUS. If warranty action is needed, contact the local dealer/distributor or the manufacturer's regional office for procedures prior to using the following:

7.22.1 In a situation where defective part(s) (that will be replaced under warranty) will place a vehicle in Non-Mission Capable Supply status; and an Air Force purchased replacement part(s) can be made available, the Air Force part(s) will be used to return the vehicle to service. In this case, the part(s) later replaced by the manufacturer will be used to replenish supply stocks.

7.22.2 Return of Defective Parts. In overseas areas, the user should exercise the vehicle warranty in one of the following ways:

7.22.2.1 Submit a claim letter (with an info copy to 580 CBSS/GBL) to the appropriate contractor's representative. Furnish contractor with a military shipment label (DD Form 1387, as illustrated in Figure 7-5). Include in the claim an offer to return the parts which failed and the following essential information:

NOTE

Manufacturers are not equipped to receive teletype/messages.

7.22.2.1.1 Complete description of the failure. Photos must be furnished on all driveline components (engines, transmissions, drive shafts and differentials).

7.22.2.1.2 Vehicle model, MFG and Contract No.

7.22.2.1.3 Date vehicle was accepted by the procuring agency (date on DD Form 250).

7.22.2.1.4 Vehicle identification number (VIN).

7.22.2.1.5 Mileage/hours when failure occurred.

7.22.2.1.6 Listing of required replacement repair parts by part number and nomenclature.

7.22.2.1.7 Transportation Control Number (TCN) for replacement parts.

7.22.2.1.8 Include a cover letter with DD Form 1387 informing the contractor where and how to ship the part. Inform the contractor to place (adhere) the label on the package. Also, to place a copy of shipment label inside of package.

7.22.2.1.9 Mailing address of the person to be contacted concerning the claim.

7.22.2.2 The contractor may respond with repair parts, request that the failed parts be returned to CONUS for evaluation, or deny the claim.

7.22.2.3 When the contractor requests exhibits, the above information must accompany the exhibit. Airmail or air freight modes should be used for transportation of exhibits from overseas.

7.22.2.4 Refer to local installation's LRS Distribution Flight for assistance in filling out the Military Shipment Label DD Form 1387, as described below.

7.22.2.4.1 Block 1. TRANSPORTATION CONTROL NUMBER. Assigned by local LRS Distribution Flight.

7.22.2.4.2 Blocks 2-4. LEAVE BLANK.

7.22.2.4.3 Block 5. SHIPPED TO/POE. The Port of Embarkation (POE) which will accept the shipment from the contractor and forward it to the user. It will vary dependent upon the overseas location, required priority and mode of shipment. Obtain from LRS Distribution Flight.

MILITARY SHIPMENT LABEL		Form Approved. OMB No. 0704-0188
1. TRANSPORTATION CONTROL NUMBER		2. POSTAGE DATA
3. FROM		4. TYPE SERVICE
5. SHIP TO/POE		6. TRANS PRIORITY
7. POD		8. PROJECT
9. ULTIMATE CONSIGNEE OR MARK FOR	10. WT. *(This piece)*	11. RDD
	12. CUBE *(This piece)*	13. CHARGES
	14. DATE SHIPPED	15. FMS CASE NUMBER
	16. PIECE NUMBER	
	17. TOTAL PIECES	

DD FORM 1387, JUL 1999 PREVIOUS EDITION IS OBSOLETE.

PN-TO36-1-191-123

Figure 7-5. Military Shipment Label (sample)

7.22.2.4.4 Block 6. TRANS PRIORITY. Required priority of which the shipment will be processed from the POE to the user; will often reflect the mode of shipment determined at the POE. Obtain from LRS Distribution Flight.

7.22.2.4.5 Blocks 7-8. LEAVE BLANK.

7.22.2.4.6 Block 9. ULTIMATE CONSIGNEE OR MARK FOR. Provide user's complete military shipping address.

7.22.2.4.7 Block 10. LEAVE BLANK.

7.22.2.4.8 RDD, Required Delivery Date. Latest date parts are required. Required entry for priority shipments.

7.22.2.4.9 Blocks 12-17. LEAVE BLANK.

7.22.2.5 If the user feels that the contractor has not fulfilled warranty provisions, the user should request assistance from 580 CBSS/GBL.

7.22.3 Shipment: Warranty claims and exhibits, when required, must be mailed or shipped to the manufacturer of the equipment subject to the claim.

7.23 WARRANTY PROBLEMS.

Should the dealer refuse to make corrections under the warranty, proceed as follows:

7.23.1 Contact the zone, district or regional service office (see OWNER manual or -1 technical order) and furnish a full explanation of the difficulty.

7.23.1.1 If prompt correction is necessary and the zone, district, or regional service representative is not readily available, proceed with one of the following:

7.23.1.2 Instruct the dealer to make the necessary corrections, bill the Air Force activity on open account, and hold any replaced parts or assemblies for examination by the manufacturer's representative.

NOTE

Prior to obligating the Air Force for payment, advance coordination with Base Contracting office is necessary.

7.23.1.3 Refer the dealer's invoice to the manufacturer's representative for payment direct to the dealer.

7.23.1.4 In isolated cases where the dealer objects to open billing or requests payment, pay the bill and obtain reimbursement later from the manufacturer. This method, however, should be a last resort because of the collection effort involved.

NOTE

All requests for reimbursements submitted to a manufacturer must accurately identify the activity to which the remittance is to be made payable. Contact the Accounting and Finance officer for this designation.

7.23.2 If the manufacturer or his representative is not receptive to a problem which is believed to be the manufacturer's responsibility, an Action Warranty Report (AWR) will be submitted, in accordance with this technical order. Action Warranty Reports on deficiencies not satisfactorily corrected by the dealer or district representative will contain, besides the normal information, the following:

7.23.2.1 Date of delivery of the vehicle.

7.23.2.2 Contract number on which the vehicle was procured.

7.23.2.3 Manufacturer's vehicle identification number, year, model, and mileage.

7.23.2.4 Name and address of manufacturer's representative refusing warranty (include dealer and district representative).

7.23.2.5 Reason for refusing warranty.

7.23.2.6 Define exactly what parts are required.

7.24 PARTS EXHIBITS.

In cases where a complaint is submitted documenting warranty problems, defective parts will be retained for at least 30 days unless otherwise advised by WR-ALC.

7.25 WARRANTY REPORTING.

Information Only Warranty Report (IWR) and Action Warranty Report shall be submitted according to the procedures outlined in the following paragraphs.

7.25.1 Conditions for submitting warranty report.

7.25.1.1 Satisfactory Information Only Warranty Reports (IWR) will be submitted for all vehicles to document satisfactorily corrected repairs in excess of $1000.00 or when three or more vehicles/equipment have the same discrepancy satisfactorily corrected. The IWR will be forwarded to the MAJCOM with an information copy to 580 CBSS/GBL.

7.25.1.2 Action Warranty Reports (AWR) will be submitted for all vehicles/equipment when the contractor refuses to make corrections under warranty. The action warranty report will be addressed to 580 CBSS/GBL for action with information copy to MAJCOM.

7.25.2 Warranty Report Processing. Warranty Reports will be submitted using the format illustrated in Figure 7-1. The illustrated format is mandatory and information required for each entry is contained in the format.

7.25.3 All warranty deficiencies, whether repaired or not, that meet criteria for reporting as a materiel deficiency will be reported in accordance with this chapter.

7.26 GENERAL.

Reporting of materiel deficiencies is mandatory. All reports will be submitted as outlined in Paragraph 7.11.

7.26.1 Reports will be processed using DREAMS as shown in Figure 7-1.

7.26.2 Materiel deficiency reports will be submitted for the following conditions:

7.26.2.1 Death, injury, or illness will result if not corrected

7.26.2.2 Damage or loss of a motor vehicle, major assembly, system or subsystem will result if not corrected.

7.26.2.3 The deficiency is known or suspected to be the cause of an Air Force mishap, (prepare and forward in accordance with AFI 91-204.)

7.26.2.4 An agreement between a system program manager and a using MAJCOM has been made for tracking a deficiency.

7.26.2.5 The combat readiness capabilities of the using organization are severely restricted.

7.26.2.6 An unsafe condition exists on a nuclear certified vehicle.

7.27 PROCESSING DRS.

The format illustrated in Figure 7-1 shall be used for processing materiel deficiency reports (MDRs) for vehicles/equipment. The instructions for completion are cited m the format illustration and are mandatory for submitting MDRs.

7.27.1 General. Reporting of URs, unsatisfactory conditions for vehicles/equipment, is mandatory. All reports will be submitted as outlined in Paragraph 7.11.

7.27.2 Method of Reporting.

7.27.2.1 Reports will be prepared using the format contained in Figure 7-1.

7.27.2.2 Reports will be processed using DREAMS as shown in Figure 7-1.

7.27.2.3 Vehicle Unsatisfactory Reports will be submitted for the following conditions:

7.27.2.3.1 Vehicles that do not meet user needs.

7.27.2.3.2 Premature materiel failure or equipment malfunction occurs that does not meet the criteria for a MDR.

7.27.2.3.3 Unsatisfactory design.

7.27.2.3.4 Unsatisfactory depot repair or remanufacture.

7.27.2.3.5 Other conditions as deemed appropriate by the VFM.

7.28 PROCESSING MDRS.

The format illustrated in Figure 7-1 shall be used for processing Vehicle Unsatisfactory Reports for vehicles/equipment. The instructions for completion are cited in the format illustration and are mandatory for submitting VURs.

7.29 PROCESSING UNSATISFACTORY REPORTS.

7.29.1 VM&A will ensure that DR exhibits are marked or tagged with DD Form 2332, Materiel Deficiency Exhibit (see Figure 7-6). Initially, the DD Form 2332 must have all blocks, except 7, 11, and 12, completed (see Table 7-1 for instructions). If size allows, the exhibit shall be moved from the Vehicle management area to a secure minimum access area designated as a DR holding area. When directed, the exhibit will be shipped to the action point. If instructions to ship, hold, or process the exhibit have not been received within 30 calendar days of the report date, the exhibit holding activity shall process the exhibit for repair/disposition according to its condition.

7.29.2 When releasing or shipping the exhibit, the activity shall:

7.29.2.1 Complete Blocks 7, 11 and 12 of DD Form 2332 attached to the exhibit along with a copy of the DR.

7.29.2.2 Attach a second completed DD Form 2332 on the outside of the package.

7.29.2.3 In the remarks block of the release shipping document, enter “Deficiency Report Exhibit.” Also add the DR report control number and the Materiel Improvement Project number (MIP).

7.29.2.4 Ship the exhibit by priority methods and notify the action point by message. The message should contain the MIP number, DR exhibit stock number, if available, exhibit part number, nomenclature, transportation control number (TCN) and method of shipment.

7.29.2.5 Ship DR exhibit within 48 hours after receipt of exhibit disposition instructions.

7.29.2.6 Ensure that exhibits are properly packed and identified according to the requirements of this publication. Assure that shipping information is entered on exhibit documents.

Table 7-1. How to Complete a DD Form 2332

In Block	Enter
1. Report Control Number	The number in Item 3 of the associated Deficiency Report (DR).

Table 7-1. How to Complete a DD Form 2332 - Continued

In Block	Enter
2. Date	The date from the DR submission date. This will be the date of the message establishing the DR.
3. Originating Activity	The name and address of the originating activity's screening point.
4. NSN	The national stock number from Item 5 of the DR.
5. Part No.	The manufacturer's part number of the failed item from Item 8 of the DR.
6. Serial No.	The serial number of the failed item from Item 9 of the DR.
7. Remarks	Information, such as the MIP number, that was not included in the other blocks and that will assist in identifying the exhibits. If the item is a mishap exhibit, enter the word "MISHAP" and the Mishap control number in this block. Exhibits subject to warranty correction will include the word "WARRANTY" in this block. When exhibit is requested by action point or support point, include "Ship To instruction".
8. Item Description	The nomenclature of the failed item from Item 6 of the DR.
9. Name	Name of the screening point representative.
10. Phone	The DSN and commercial (including area code) telephone numbers of the screening point.
11. Date Exhibit Release	The date the exhibit was released to the action or support point.
12. Exhibit Released to	The name, address, and telephone number of the person at the action point or support point to whom the exhibit was released.

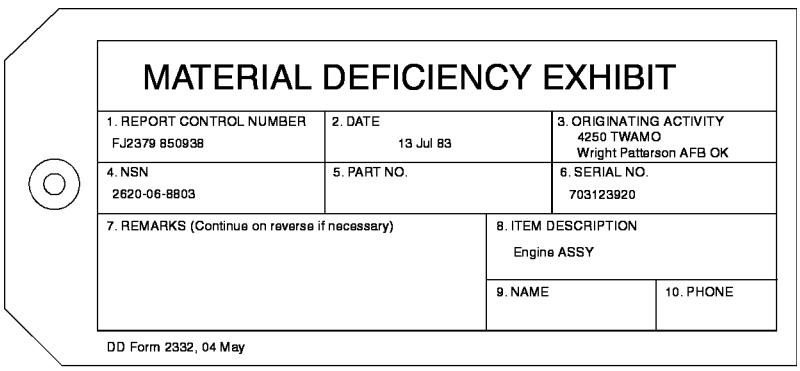

FRONT

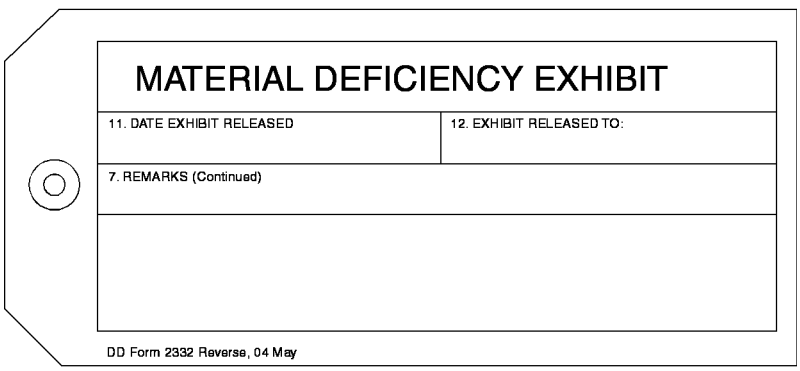

BACK

PN-TO36-1-191-124

Figure 7-6. DD Form 2332, Materiel Deficiency Exhibit Tag

7.30 VIWG.

The VIWG is a working group consisting of MAJCOM vehicle representatives that review reported vehicle/equipment deficiencies and establish priorities for resolution.

7.30.1 VIWG will be chaired by the Vehicle System Program Office (580 CBSS/GBL) and meet annually or on an as required basis at WR-ALC. The Vehicle Management Advisory Group (VMAG) is normally held in conjunction with the VIWG. 580 CBSS/GBLwill ensure the following are accomplished:

7.30.1.1 Collect and perform trend analysis on unsatisfactory reports (URs).

7.30.1.2 Prepare agenda and forward it to VIWG members at least 15 days prior to the VIWG.

7.30.1.3 Prepare minutes and specify action items in accordance with Figure 7-7.

7.30.1.4 Provide semi-annual status follow ups on action items.

7.30.2 MAJCOMS are responsible to:

7.30.2.1 Collect and monitor VURs and warranty reports.

7.30.2.2 Monitor DRs.

7.30.2.3 Coordinate with applicable ALC for corrective action.

7.30.2.4 Submit prioritized proposed action items for VIWG conference.

7.30.2.5 Fund and support VIWG meetings as scheduled by 580 CBSS/GBL. Program funds for one 5-day meeting per year.

7.31 REPORTING.

Action items not identified in the 580 CBSS/GBL agenda will be reported to 580 CBSS/GBL following the format in Figure 7-7.

7.32 VIWG/VMAG MEMBERS.

VIWG/VMAG members are listed in Table 7-2.

Table 7-2. VIWG/VMAG Members

HQ ACC/A4TV 130 Douglas St, Ste 301 Langley AFB, VA 23665-2096	10 MSG/LGROT 8122 Edgerton Dr, Suite 101 USAF Academy, CO 80840-2450
HQ AFMC/A4RV 4375 Chidlaw Rd, Rm B113 Wright-Patterson, AFB OH 45433-5006	580 CBSS/GBL 295 Byron St Robins AFB, GA 31098
HQ AFSOC/A4RXT 100 Bartley St, Suite 225 Hurlburt Fld, FL 32544-5273	AFLMA/LGLR 502 Ward St Maxwell AFB-Gunter Annex, AL 36114-3236
HQ AFSPC/A4RM 150 Vandenberg St, Suite 1105 Peterson AFB, CO 80914-4435	Det 1 345 TRS/DORP 1015 Femoyer St Lackland AFB, TX 78236-1030
HQ AMC/A4RV 402 Scott Dr, Unit 2A2 Scott AFB, IL 62225-5308	HQ USAF/A4RE 1030 Air Force Pentagon Washington, DC 20330-1030
HQ PACAF/A4RVM 25 E Street, Suite J-302 Hickam AFB, HI 96853-5427	HQ AFCESA/CEOO/CEXF 139 Barnes Dr, Suite 1 Tyndall AFB, FL 32403-5319

Table 7-2. VIWG/VMAG Members - Continued

HQ 554 ELSG OL-AD/LR 201 East Moore Dr Maxwell AFB-Gunter Annex, AL 36114-3005	AFDW/A4R 200 McChord St Bolling AFB, DC 20332-0303
HQ AFRC/A4RDV 155 Richard Ray Blvd. Robins AFB, GA 31098-1635	HQ USAF/A4PR 1030 Air Force Pentagon Washington, DC 20330-1030
ANGRC/A4RDV 3500 Fetchet Ave Andrews AFB, MD 20762-5157	HQ AFOSI/LGT 1535 Command D., Suite BC-202 Andrew AFB, MD 20762
HQ AETC/A4RTV 555 E Street East Randolph AFB, TX 78150-4440	HQ AIA/LGSP 102 Hall Blvd, STE 258 San Antonio, TX 78243-5000
HQ USAFE/A4RV Unit 3050, Box 105 Ramstein AB, GE APO AE 09094-0105	AFELM VEMSO 54 Willow Street, Wing B Langley AFB, VA 23665-2081

1996 VEHICLE CONFERENCE
VEHICLE IMPROVEMENT WORKING GROUP (VIWG) ACTION ITEMS

1. IN USE NSN:
2. TO 361-1-1301 NOMENCLATURE:
3. MFG/MODEL:
4. ACTION ITEM NUMBER: (ALC USE ONLY)
5. SUBMITTED BY: a.b.
   (NAME/RANK) (ORGANIZATION)
   c.d.
   (OFFICE SYMBOL) (TELEPHONE NUMBER)
6. SUBJECT:
7. PROBLEM:
8. RECOMMENDED SOLUTION:
9. CONF ACTION/COMMENT:
10. ACTION OPR:
11. COMPLETION DATE:
12. STATUS:
13. BACK UPs AND WARRANTY REPORTS:

PN-TO36-1-191-125

Figure 7-7. VIWG Action Items

CHAPTER 8
STORAGE AND SHIPMENT

8.1 PURPOSE.

The purpose of this chapter is to assist concerned personnel in the protection of Air Force vehicles by use of long and short term storage procedures. Information contained herein will serve as a guide for preparing serviceable and economically reparable vehicles for storage and shipment. In addition, inspecting and servicing requirements for vehicles in storage awaiting shipment are provided.

8.1.1 Vehicles which have been processed for storage in accordance with locally issued instructions should be reprocessed to the extent necessary for adequate preservation to comply with this publication.

8.2 SCOPE.

Processing instructions outlined within this publication pertain to all serviceable and reparable Air Force vehicles, excluding transport and transfer vehicles for missile systems, oxidizers, propellants, and pressurizing gases. Requests for specific instructions in preparing these special purpose vehicles for storage should be forwarded to the prime agency responsible for the end item. Each organization commander shall stress safety instructions when receiving and initially handling such vehicles.

CAUTION

Residues of explosive, toxic, and chemical agents may cause bodily harm.

8.3 RESPONSIBILITY FOR PROCESSING AND DEPROCESSING.

8.3.1 Owning Air Force organizations and installations are responsible for processing serviceable and economically reparable vehicles. The vehicle management activity which falls under that specific owning group shall be responsible for processing/deprocessing reparable vehicles. The requirements of this technical order do not apply to vehicles which are awaiting disposal; however they may be used for guidance when minimum measures are needed to protect item's sales value, redistribution assets, or to achieve optimum environmental safety.

8.3.2 The processing activity is also responsible for prevention of vehicle deterioration while vehicle is awaiting processing.

8.3.3 Intra-Organizational Responsibility. Processing for storage, conduct of storage, and processing for shipment are the responsibility of the base vehicle management activity. However, considerations or expedience, economy, and practicality may lead local commanders to designate that base vehicle management shops perform part or all of these tasks. This will usually be the case where the quantity of vehicles processed is small, work intermittent, special skills are required, and facilities to be used are peculiar to vehicle management operation, or an unwarranted duplication of processing facilities would result.

NOTE

Reference to intra-organizational responsibility is included for orientation and information only. It is not intended to vary or supplement any directives as to placement of basic responsibilities.

8.3.4 Deprocessing. Inspection, deprocessing and preparation for service are the responsibility of the base vehicle management activity except where drive-away shipments or other special instructions are involved.

8.4 WATER EXPORT OVERSEAS.

8.4.1 Newly acquired vehicles, whether destined for overseas or CONUS locations shall have received manufacturer's standard rustproofing. Local base commanders shall determine need for additional corrosion treatment and/or processing as required. All newly procured vehicles destined for water export to highly corrosive environments or subject to frequent deployment to those areas should be considered for added rustproofing. Severe to very severe corrosive locations are depicted in Table 6-3.

8.4.2 Vehicles in use and destined for overseas shipment (as a result of command levies) will be processed at local base or off-base facilities as determined by the owning command. The local commander is the lowest level officer who may authorize processing or treatment at a specific center or facility. Transfer of ownership and responsibility occurs at the overseas port destination.

8.4.3 Determination of corrosion center to be used: Request for routine shipment instructions should also contain a request for the vehicle to be processed through a corrosion treatment facility.

8.5 LEVELS OF PRESERVATION.

The levels of preservation provided herein are as follows:

8.5.1 Level A the requirements specified for this level are intended to provide adequate protection to vehicles and components from corrosion, deterioration, and physical damage during shipment, handling and varying periods of storage in excess of 90 days from date of preservation. Vehicles with bio-diesel fuel will have their tank drained, filters changed, and standard diesel added prior to being preserved to Level A.

8.5.2 Level B the requirements specified for this level are intended to provide adequate protection for domestic or oversea shipment (open deck loading excluded) and which may involve outside storage for a combined total of approximately 90 days.

8.5.3 Level C the requirements specified for this level are intended to provide adequate protection during domestic shipments to immediate use locations and for vehicles Non Mission Capable Supply for less than 90 days.

8.5.4 Live Storage and Air Shipments (see Paragraph 8.12 through Paragraph 8.23).

8.5.5 PACAF and ACC (CENTAF) have deviated from conventional storage methods with concurrence and approval of USAF/A4RE and adopted the vapor-phase corrosion inhibiting (VpCI) method of storage for WRM assets. Reference PACAFHAN 24-3 (available electronically at http://www.e-publishing.af.mil/shared/media/epubs/PACAFH24-3.pdf.) and USCENTAFAFI 24-101 for detailed procedures for VpCI storage methods. The two types of VpCI storage are:

8.5.5.1 Active Storage. Active storage provides a level of VpCI protection sufficient for vehicles that are periodically exercised or utilized during exercises and surges. Actively stored vehicles are maintained in a ready-to-use configuration. PACAFHAN 24-3, Chapter 6 and USCENTAFI 24-101, Chapter 6, details procedures for preparing vehicles for active storage.

8.5.5.2 Inactive Storage. Inactive storage provides a level of VpCI protection sufficient for periods of inactivity for up to three years. Inactively stored vehicles are not maintained in any way during periods of inactivity with exceptions for accomplishment of urgent action time compliance technical orders, etc. PACAFHAN 24-3, Chapter 5 and USCENTAFI 24-101, Chapter 5, details procedures for preparing vehicles for inactive storage.

8.6 PROCESSING PROCEDURES.

8.6.1 Materials required for processing are listed in Table 8-1.

8.7 EXPLANATION OF COLUMNS.

Column explanations of Table 8-2 are as follows:

8.7.1 Column I indicates the item number.

8.7.2 Column II lists the component part, accessory, or system to be processed. These are in alphabetical order to facilitate reference.

8.7.3 Column III indicates the level (A or B) of processing described.

NOTE

No detailed requirements are specified for Level C which is intended to provide adequate protection at minimum cost for immediate use domestic shipments. The preparing activity is expected to preserve, package, and pack to insure safe receipt at first destination and must comply with applicable carrier rules and regulations. In every case care must be exercised to ensure that cooling systems are adequately protected, that body drains and ventilators are open, that hatches, doors, and compartment covers are secured against pilferage, and that accompanying accessories and OVE (On Vehicle Equipment) are properly stowed. When the vehicle is shipped Level C to a port for transit overseas, the OVE shall be packaged in accordance with requirements for Level A or B unless otherwise specified.

8.7.4 Column IV contains the symbol for the type of vehicles affected by the entry. Symbols used are as follows:

AV-All vehicles.
AX-All vehicles except trailers and semi-trailers.
GP-General purpose vehicles.
MH-Materials handling vehicles.
SE-Special equipment vehicles.
SP-Special purpose vehicles.
ST-Semitrailers
TR-Trailers

The Tunner 60K aircraft loader is covered separately in Appendix A.

8.7.5 Column V prescribes the minimum required processing (or equal). In addition, general cross-references are made to a process described elsewhere.

Table 8-1. Materials Required for Processing

Specification	Material/Item	NSN
Federal		
	Wax, Automobile Paste	7930-00-985-6750
PPP-B-140C	Packaging Methods	N/A
O-L-160A(12)	Compound, Radiator Leak Preventative	6850-00-598-7311
	Dressing, Leather, Mildew Preventative	8030-00-221-0665
	Oil, Neat' s foot	8030-00-244-1031
ASTM-D2346	Oil, Linseed, Raw	8010-00-242-6111
CID A-A-50493B	Oil, Penetrating	9150-00-852-4659
VV-P-236A	Petrolatum, Technical	9150-00-250-0926
CID AA-A-52518	Talc, Powder, Type IV, Class C	6810-00-270-9988
MIL-A-53009A(1)	Inhibitor, Corrosion, Liquid Cooling System	6850-01-160-3868
CID A-A-59563	Neutralizer, (Soda Ash) Sodium Carbonate Type I, Light Type II, Medium Type III, Dense	 6810-00-237-2906 6810-00-233-1715 6810-00-262-8567
	Box, Wooden, Nailed/Lock Comer	8115-00-685-5171
SSPC-PAINT25	Primer, Synthetic, Rust-Inhibiting	8010-00-161-7275
MIL-PRF-680A(1)	Solvent, Dry Cleaning Type II	6850-00-285-8011
SAE-J2360	Lubricant, Non EP, Enclosed Gear Grade 80, 90, 140, 250	9150-01-035-5394
ASTM-D3953	Strapping, Flat, Steel	8135-00-281-4069
CID A-A-52557A	Fuel, Diesel	9140-00-286-5284
MIL-PRF-32033(1)	Preservative, Lube Oil, Water Displacing Low Temp (P-9)	9150-00-281-2060
PPP-B-1055	Material, Water Proof Barrier CLB2 CLB1	8135-00-274-3683 8135-00-171-1559
PPP-C-1120	Material, Cushioning9/5	10/248135-00-292-9789
ASTM-D4814	Fuel, Motor Gasoline (MOGAS)	9130-00-148-7104
MILITARY/DEPARTMENT OF DEFENSE		
MIL-STD-2073-1D(1)	Standard Practice for Military Packaging	N/A
MIL-E-6060D Sup1	Packaging, Envelopes 8 inches × 12 inches 10 inches × 14 inches	8105-00-264-5525 8105-00-726-7387
MIL-PRF-121G	Material, Flex Grease Proof Barrier Paper, Laminated 36 inches × 24 inches Type II	8135-00-753-4661 8135-00-680-2777
MIL-P-130F	Paper, Crepe Bailing	8135-00-664-0028
MIL-PRF-131K	Material, Water/Vapor Proof Barrier 36 inches × 200 Yds For Weights of 10# or under	8135-00-282-0565
QQ-A-1876	Foil, Aluminum 1 Mil × 12 inches wide	8135-00-541-2453
MIL-S-196D	Support Items, Accessories, and Kit Packaging	
MIL-STD-129P(3)	Military Marking for Shipment and Storage	
MIL-PRF-23199E	Packaging and Packing Support Requirements For Special Mechanical Components and Repair Parts	
MIL-DTL-117H	Bags, Heat Sealable	
MIL-PRF-2104H	Oil, Lube, Internal Combusted Engine 15W-40 QT 5 GL 55 GL	9150-01-152-4117 9150-01-152-4118 9150-01-152-4119

Table 8-1. Materials Required for Processing - Continued

Specification	Material/Item		NSN
Federal			
SAE-J2360	Lube, Gear Universal GD 80W/90		
	GD 80W/90 -10 °F to 120 °F	QT	9150-01-035-5392
	GD 75W -50 °F to 55 °F	QT	9150-01-035-5390
	GD 85W/140 10 °F to 120 °F	QT	9150-01-048-4591
MIL-PRF-3150D(2)	Preservative, Lube Oil, Medium Temp (P-7)	QT	9150-00-231-2361
MIL-D-3464E	Absorbent, Moisture Desiccant Type I	DR	6850-00-264-6571
	Absorbent, Moisture Desiccant Type II	DR	6850-00-935-9794
NAS847	Cap, Plastic Plug	HD	5340-00-240-9228
MIL-P-14105D	Paint, Enamel, Heat Resistant	QT	8010-01-235-4165
A-A-59295	Compound, Corrosion Preventative (P17)		
SS-G-659A	Graphite		9620-00-529-9629
	Coating, Elastomeric		
MIL-G-21164D	Lubricant, Molybdenum Disulfide		6810-00-264-6715
MIL-PRF-9000H	Lubricant, Solid Film, Heat Cured	55 GL	9150-00-181-8097
MIL-C-10382D	Preventative, Corrosion, Petrolatum Spray For Potable Water & Food Handling Machinery/ Equipment (PI 4)	5 GL	8030-00-251-5049
	Compound, Inhibitor/Cleaner/Conditioner Engine cooling systems (P11)	KT	
MIL-PRF-10924G	Lubricant, Grease, Corrosion Preventative	2.25 oz	9150-01-197-7688
		14 oz	9150-01-197-7693
		1.75 IB	9150-01-197-7690
		6.5 IB	9150-01-197-7689
		35 IB	9150-01-197-7692
		120 IB	9150-01-197-7691
CID A-A-52408	Preservative, Rubber Products	GL	8030-01-282-5626
CID A-A-52624A	Antifreeze	GL	6850-01-464-9266
MIL-C-11796C	Compound, Corrosion Preventative (P6)	5 LB	8030-00-231-2353
	Material Waterproof Barrier	CL I	
		CL II	
MIL-V-13811D	Varnish, Waterproof, Electrical Ignition	QT	8010-00-298-3870
CID A-A-59295	Compound, Corrosion Preventative (P1)		
	GD I For Cooling system and Pumps	55 GL	8030-00-244-1300
		GD II(P2) 5 GL	8030-00-244-1298
		GD III (P3) 55 GL	8030-00-244-1294
		GD V (P21) 55 GL	8030-00-526-1604
MIL-C-10578D	Compound, Corrosion Removing GD I (PI)	5 GL	6850-00-854-7952
MIL-DTL-17667E	Paper, Chemical Neutral Wrapping 33 inches X 600 feet Type 1		8135-00-558-1242
MIL-C-18480B	Coating, Preservative	5 GL	8030-00-275-8121
MIL-PRF-21260E	Preservative, Lube Oil GD 10, Type 1 Air Cleaners	55 GL	9150-00-111-0208
	Spark & Compression (P10) GD 30 Type 1 Ignited Engines		9150-00-111-0201
	Fuel Tonics 50, Type I		9150-00-111-0214

Table 8-1. Materials Required for Processing - Continued

Specification	Material/Item		NSN
Federal			
MIL-C-21567A	Lube, Unpainted Metal, Rubber, and Vinyl		6850-00-702-4297
MIL-PRF-3150D	Preservative, Aluminum Alloys/Ferrous Metals (P18)		9150-00-271-8427
	Primer, Epoxy-Polymide		
MIL-L-23398D(2)	Lubricant, Solid Film, Air Drying	PT	9150-01-260-2534
SAE-AMS-T-22085	Tape, Pressure Sensitive Type II	5 GL	7510-00-275-8121
MIL-I-24092D Sup 1	Varnish, Electrical Insulating	5 GL	5970-00-548-7070
DOD-PRF-24574(2)	Fluid, Lube	QT	9150-01-101-8834
MIL-PRF-38299C	Fluid, Pumping	54 GL	6850-00-965-2356
SAE-AMS-T-22085	Tape, Pressure-Sensitive 4W×36 Yards		8135-00-916-9659
	Tape, Pressure-Sensitive 2-1/2W×36 Yards		8135-00-885-3510
CID A-A-59441/1	Inhibitor, Corrosion Control I, Aluminum/Ferrous Metal Closed Systems (P20)		
MIL-PRF-46147C	Lubricant, Solid Film Air Cured, Corrosion Inhibitor	12oz CN	9150-01-500-2795
SAE-J2362	Oil, Engine Lube, Admin Only	QT	9150-00-186-6699
CID A-A-52624	Anitfreeze, Ethylene Glycol HD (To -55 °F)	55 GL	6850-01-441-3223
MIL-PRF-46167D	Oil, Engine Lube, Arctic (Also used for arctic Hydraulic Fluid)	55 GL	9150-00-491-7197
MIL-PRF-46170D	Fluid, Hydraulic, Corrosion Inhibitor		9150-01-158-0462
MIL-PRF-46176B	Fluid, Brake Silicone Master Brake Cylinder Must Be Tagged to Read “Use MIL-B-46176 Only” Lubricant, Solid Film, Phosphoric Acid Bonded	GL	9150-01-102-9455
ASTM-D6107	Compound, Anti-Leak, Cooling System		6850-00-849-4035
	Gasohol		9130-01-355-2393
MIL-A-53009A(1)	Additive, Anti-Freeze Extender	QT	6850-01-160-3868
	Sealer, Weld-Through For Overlapping Surfaces		
MIL-S-53021A	Additive, Diesel, Stabilizing Storage Commercial Product STA-BIL or equal Additive, MOGAS, Anti Gumming Storage Commercial Product STA-BIL or equal	5 GL 4oz BIT	6850-01-246-6544 6850-00-274-5193
CID A-A-59295	Compound, Corrosion Preventive	16oz CN	8030-01-134-6513
MIL-PRF-81309F	Compound, Corrosion Preventive (Electrical Contacts) 1602		8030-00-546-8637
MIL-PRF-81733D	Compound, Corrosion Inhibitor	KT	8030-00-008-7203
MIL-PRF-85570D	Detergent, Explosive, Vapors Neutralizer	GL	6850-01-011-8082
MIL-PRF-83282D(1)	Fluid, Hydraulic, Flame Resistant	QT	9150-00-149-7431
MIL-PRF-85285D	Paint, Polyurethane	KT	8010-01-380-3252
CID A-A-59295	Compound, Corrosion Preventative (Touch Up Across 1602 Of Exposed Meter) (PI) 1 QT	 1 QT	8030-01-041-1596 8030-01-045-4780

Table 8-2. Processing Procedures

COLUMN I Item	COLUMN II Component	COLUMN III Level	COLUMN IV Type of Vehicle	COLUMN V Processing Required
1	Air Cleaners Oil Bath Type	A	AV	Shall contain P-10, Type 1, Grade 30, preservative oil, filled to operating level. Unpainted surfaces above operating level shall be coated with the same type and grade preservative oil.
		B	AV	Shall contain lubricating oil conforming to requirements of applicable drawing, specification or lubrication order, filled to operating level. When air cleaner contains P-10 preservative oil, grade as applicable, operating level shall be attained by addition of the same grade oil, or lubricating oil conforming to Specification MIL-PRF-2104G.
2	Air Cleaners, Air Type	A, B	AV	Inspect filter element to ensure it is clean with no holes or slits. Clean all dirt and particles from filter housing. Ensure filter seats proper. Do not coat element with preservative. Tape all openings with tape conforming to SAE-AMS-T-22085.
3	Batteries, cables, and electrolyte (except electric powered materials handling equipment) for water shipment	A	AV	a. Clean batteries, cable, and battery boxes as required with a solution consisting of one half pound of soda ash, Specification O-S-571, per gallon of water. **WARNING** When working around batteries, always wear eye protection (face shield), acid resistant rubber apron and gloves. b. Disconnect cables, removing the ground cable first and secure to battery support with tape conforming to Specification SAE-AMS-T-22085. c. Wet batteries (except nickel, iron-alkaline, see item 3, MHE) shall be removed from vehicles and reported to the appropriate property class as excess, requesting disposition instructions. Batteries so removed shall be maintained in a charged condition while awaiting disposition instructions. d. Dry batteries shall be space packaged and packed in accordance with the overseas requirements of Specification PPP-B-140C. The vent holes in the filler caps of dry batteries shall be plugged or sealed.

Table 8-2. Processing Procedures - Continued

COLUMN I Item	COLUMN II Component	COLUMN III Level	COLUMN IV Type of Vehicle	COLUMN V Processing Required
				WARNING Electrolyte is highly toxic to the skin, eyes and respiratory tract. Avoid all contact. Skin & eye protection & vapor control are required. Assure this operation has been reviewed by local Bioenvironmental Engineer.
3-Continued				e. Electrolyte shall be packaged and packed in accordance with the requirements of Specification O-S-801F. f. Packaged batteries and electrolyte shall be stowed with other OVE. Electrolyte shall be stowed in a manner permitting easy removal at ports when special stowing is required by maritime regulations. g. Battery posts shall be covered with plastic caps or tape conforming to Specification SAE-AMS-T-22085.
				WARNING Sealing and coating compound and Polyurethane paint are flammable and toxic to eyes, skin, and respiratory tract. Avoid skin and eye contact. Good general ventilation is normally adequate. Keep away from open flames or other sources of ignition. Use special acid and alkali-resistant coating in the battery compartment to resist sulfuric acid and potassium hydroxide used in storage batteries.
				h. Battery Compartment Finish. The surface to receive coating must be thoroughly clean, dry and free from any contamination. Apply one coat MIL-PRF-81733D, Type III, sealing and coating, compound, corrosion inhibitive and one coat MIL-PRF-85285D polyurethane paint, to battery box, supports, and retainers. Application shall be in accordance with the manufacturer's instructions.

Table 8-2. Processing Procedures - Continued

COLUMN I Item	COLUMN II Component	COLUMN III Level	COLUMN IV Type of Vehicle	COLUMN V Processing Required
3-Continued				i. Remove batteries from vehicles in NMCS status only when climatic conditions or security concerns warrant such action. If batteries are removed, ensure they are identified with the vehicle registration number and are stored in an appropriate location.
4	Batteries. Storage/ shipment other than water, cables and electrolytes (except electric powered MHE)	B	AV	a. Clean as per Item 3 a, above. b. Disconnect cables from battery. Move cables/ ends away from battery posts and electrolytes covers. Cover battery posts with plastic caps or with tape (except electric tape conforming to Specification powered MHE SAE-AMS-T-22085). c. Wet batteries: Batteries shall remain secured in place in vehicle battery box and maintained in fully charged condition. d. Dry batteries: Batteries shall be secured in place in vehicle battery carriers. The vent holes in the filler cap shall be plugged or sealed. The electrolyte shall be packed in accordance with O-S-801F and stowed as specified under Level A requirements, above. **NOTE** When a unit has been in Level B storage for the maximum 90 day period and determination is made to reprocess Level B, it is recommended that wet type batteries be removed from closed type cabs or bodies and maintained under protective storage in a fully charged condition or replaced with dry charged batteries as determined by the responsible storage officer. Wet type batteries becoming excess under this procedure will be reported as prescribed under Level A, above.
5	Batteries and cables electric powered materials handling equipment.	A	MH	Electric powered materials should be placed in inside storage when such space is available. When the materiel handling equipment cannot be placed in inside storage, the battery will be removed pending shipment and placed in protected storage on suitable wood bases with solid floor, using two or more skids. A standard pallet may be used provided the load does not exceed 2500 pounds. When the vehicle is stored under adequate cover the battery shall be stored in place in the vehicle battery carrier.

Table 8-2. Processing Procedures - Continued

COLUMN I Item	COLUMN II Component	COLUMN III Level	COLUMN IV Type of Vehicle	COLUMN V Processing Required
5-Continued				a. Wet batteries: (1) Lead-acid type. Lead-acid type batteries removed shall be maintained in a charged condition while awaiting disposition instructions. **NOTE** Batteries may remain in vehicle for levels B and C conditions. Also, when stored outside under level A conditions, batteries may remain in vehicle for exercise purposes until no longer capable of recharging. (2) Nickel-iron-alkaline. Make certain that the electrolyte is at the recommended level and that filler caps are in a closed position. Discharge batteries at normal rate to 0.5 volts per cell. Short circuit each tray leaving wires connected during the storage period. **NOTE** These batteries may be received discharged, dumped of electrolyte and short circuited. Unless otherwise specified, they need not be filled. The electrolyte for nickel-iron-alkaline batteries consists of a solution of potassium and lithium hydroxide in water. The electrolyte will be packaged as specified and identified to this type battery. b. Electrolyte accompanying the vehicles (when required) shall be packaged in accordance with Specification PPP-B-140C. c. Wrap the contact plug with neutral paper conforming to Specification MIL-DTL-17767E; overwrap with water/vapor proof barrier material conforming to Specification MIL-B-131 sealed with pressure sensitive tape conforming to Specification PRF-131J. Connector cables removed shall be preserved and packaged in accordance with Method IAW or Specification MIL-STD-2073-1D(1) and secured within the battery compartment or stored with the removed battery as applicable. d. Cover tops of batteries secured in place in the vehicle battery carrier with a protective shroud of waterproofed paper conforming to Specification PPP-B-1055 B extending down sides and ends a minimum of 6 inches and secured with pressure sensitive adhesive tape conforming to Specification SAE-AMS-T-22085.

Table 8-2. Processing Procedures - Continued

COLUMN I Item	COLUMN II Component	COLUMN III Level	COLUMN IV Type of Vehicle	COLUMN V Processing Required
5-Continued		B	MH	Unless otherwise specified, batteries will be stored and shipped in the vehicle battery carrier. Cables and contact plugs shall be preserved as specified for Level A, above. No special protective measures are required for nickel-iron-alkaline batteries. Wet charged lead-acid batteries shall be maintained in a charged condition awaiting shipment or use. Shrouding shall be optional at the discretion of the responsible officer. Electrolyte shall be packaged as specified for Level A, above.
6	Belts, Drive	A	AV	Tension of all drive belts shall be released. Coat unpainted surfaces of pulley grooves with primer conforming to Specification TT-P-664. A warning tag bearing the information, "TENSION RELEASED ON ALL DRIVE BELTS, ADJUST BEFORE USE", shall be securely attached in a conspicuous location near driver's or operator's controls.
		B	AV	No processing required.
7	Bodies, General (cabs are covered under applicable items below)	A, B	AV	Except as otherwise specified bodies will be sufficiently ventilated to permit free movement of air by opening drain valves or plugs and placing 1/4 to 3/8-inch spacers between inspection plates and floor of vehicle or access doors where design permits. Openings for ventilation will be protected from entry of casual water and driving rain or snow by draping with waterproofed Kraft paper conforming to Specification PPP-B-1055B, secured in place with pressure sensitive tape conforming to Specification SAE-AMS-T-22085. Bodies will be tilted as necessary to drain any accumulated water. Prior to shipment all access doors to compartment equipment lockers and control panels will be secured to prevent pilferage. When design does not include a locking device, flat steel strapping conforming to Specification ASTM-D3953 may be banded over doors and mounted equipment such as ladders, spare tires, etc. Comers or projections susceptible to damage by banding will be properly cushioned or protected by inserting 1 inch × 4 inch wood strips beneath the bond where necessary.

Table 8-2. Processing Procedures - Continued

COLUMN I Item	COLUMN II Component	COLUMN III Level	COLUMN IV Type of Vehicle	COLUMN V Processing Required
				WARNING CID A-A-59295 preservative is flammable and toxic to eyes, skin, and respiratory tract. Avoid skin and eye contact. Good general ventilation is normally adequate. Keep away from open flames or other sources of ignition.
8	Bodies, Cargo and Command	A	GP	Cover shall be removed, leather straps coated with Neat's Foot Oil, and cover, including end curtains, shall be thoroughly dried, folded or rolled, packaged in accordance with Method IC-5 of Specification STD-2073-1, and packed in a nailed wood box conforming to Specification PPP-B-621. Box shall be identified to indicate contents. Top bows shall be removed. Unpainted metal surfaces of bows, stake pockets, and removed hardware shall be coated with CID A-A-59295 Type P-1 preservative, and hardware, when dry, shall be reinstalled into one of the mating parts. Bows shall be banded together with strapping conforming to Class A or B of Specification ASTM-D3953 and secured to floor of cargo compartment. Openings afforded by removal of bows, and stake pockets that are not provided with drain holes to permit draining, shall be covered with tape conforming to Specification SAE-AMS-T-22085. When required for reduction in cube, troop seats and side racks shall be removed, banded together with the same class strapping and secured to floor of cargo compartment. Boxed cover shall be stowed and secured with other OVE. Body drains shall be opened to prevent accumulation of water.
		B	GP	Cargo and command bodies. When required for reduction of cube, cover, bows, troop seats, and side racks shall be removed and packaged in accordance with Level A above. All exposed, unpainted machined surfaces of the hydraulic ram, when the dump body is fully retracted, shall be coated with MIL-C-10578, P-1 preservative. Release tailgate to prevent accumulation of water in body.

Table 8-2. Processing Procedures - Continued

COLUMN I Item	COLUMN II Component	COLUMN III Level	COLUMN IV Type of Vehicle	COLUMN V Processing Required
9	Bodies, Dump	A	GP	Dump body. Unpainted metal surfaces of body, roller arms and ramps, uncovered tailgate chains, locking devices, control levers, and related linkage shall be coated with MIL-C-10578 P preservative. Hydraulic system shall be filled to operating level with operational hydraulic fluid. When furnished, cab protector rack, except when welded, shall be removed and secured within body. Removed hardwood and unpainted surfaces exposed by disassembly shall be coated with A-A-59295 P-1 preservative, and hardware reinstalled into one of the mating parts. All exposed, unpainted machined surfaces of the hydraulic ram, when the dump body is fully retracted, shall be coated with MIL-C-16273, P-1 preservative. Release tailgate to prevent accumulation of water in body. Removed hardware and unpainted surfaces exposed by disassembly shall be coated with CID A-A-59295 P-l preservative, and hardware reinstalled into one of the mating parts.
		B	GP	Dump body. Hydraulic system shall be filled to operating level with operational hydraulic fluid. When required for reduction in cube, cab protector rack, except when welded, shall be removed and secured within body. Removed hardware and unpainted surfaces exposed by disassembly shall be coated with MIL-C-16173 P-1 preservative, and hardware reinstalled into one of the mating parts.

Table 8-2. Processing Procedures - Continued

COLUMN I Item	COLUMN II Component	COLUMN III Level	COLUMN IV Type of Vehicle	COLUMN V Processing Required
				WARNING Prior to welding or cutting of any tank, ensure the operation has been reviewed by the Bioenvironmental Engineer, Fire Department and Base Safety Office as required by AFOSH STD 91-5. MIL-PRF-32033(1) Preservative Oil is toxic to skin, eyes and respiratory tract. Avoid skin and eye contact. Good general ventilation is normally adequate.
10	Bodies, Fuel Tanks	A	SP ST TR	The tank shall be purged as per Paragraph 8.24. After purging, the interior of the tank will be visually inspected. When inspection discloses that the tank requires cleaning, or that protective coating is not satisfactory, the tank will be processed to the extent necessary to fulfill the requirements of TO 36Y31-1-1. All interior surfaces of fuel compartments on vehicles equipped with uncoated steel tanks (except stainless steel) including unpainted metal surfaces of underside of hatches, shall be coated with P-10, Type I, Grade 30, preservative oil, and tank drains left in open position. Drain openings shall be screened to prevent entry of insects and rodents. Rubber seals of hatches shall be coated with talc conforming to Type IV, Class C of Specification CID A-A-52518 and hatches shall be closed and secured. Exterior unpainted metal surfaces of hose couplings, valves and pump shall be coated with CID A-A-59295 Type P-1 preservative. Equipment compartment drains shall be secured in open position. Door hinges and latches will be lubricated with MIL-PRF-32033(1) Type P-9 preservative oil, and doors closed and secured to prevent pilferage or damage. **NOTE** Requirements for fuel pumping systems, filters, and segregators are covered under applicable items.

Table 8-2. Processing Procedures - Continued

COLUMN I Item	COLUMN II Component	COLUMN III Level	COLUMN IV Type of Vehicle	COLUMN V Processing Required
11	Bodies, Soft Top Vehicles	A, B	GP	Top shall be removed, thoroughly dried, folded or rolled in a manner to avoid creasing of plastic windows, packaged in accordance with Method IC-5 of Specification MIL-P-116, and packed in a nailed wood box conforming to Specification PPP-B-621. Box shall be identified and stowed with other OVE. Windshield wiper arms and blades shall be removed and, together with keys, stowed in dash compartment, and windshield secured in folded-down position. When dash compartment is not provided, wiper arms and blades, together with key, shall be placed in a bag conforming to type optional, Class b, of Specification MIL-B-117, and securely attached to steering column. Seat backs and cushions shall be removed and fabric surfaces covered with barrier material conforming to Type CW-1, Class 2; or Type B-2, Class 2, grade A of Specification MIL-B-13239. Barrier material shall be secured with tape conforming to Specification SAE-AMS-T-22085 for Level B, and MIL-T-22085 for Level A and seat backs and cushions reinstalled. Dash panel, including defroster vents, shall be covered with waterproof paper conforming to Specification PPP-B-1055, and paper secured, except at bottom, with tape conforming to Specification SAE-AMS-T-22085 for Level B, and MIL-T-22085 for Level A. Horn button shall be covered with the same class paper, of a size to completely cover opening around horn button, and paper shall be secured in the same manner as specified for dash panel. When required for reduction in cube, top, end curtains, and windshield wiper arms and blades shall be removed and packaged in accordance with Level A above, except that seat backs and cushions, dash panel, including defroster vents, and horn button shall not be preserved.

Table 8-2. Processing Procedures - Continued

COLUMN I Item	COLUMN II Component	COLUMN III Level	COLUMN IV Type of Vehicle	COLUMN V Processing Required
12	Bodies, Van Ambulance, Panel Utility and Maintenance Vehicles	A, B	SE	Body drains and ventilators shall be opened to provide all possible ventilation. (See item 5.) Door hinges, latches, and operating mechanisms shall be lubricated with MIL-PRF-32033(1) Type P-9 preservative oil. Special equipment furnished with the body shall be preserved in accordance with requirements of applicable technical orders, or process specifications listed on USAF Specification Bulletin 56, Level A or B (domestic) as applicable. Requests for special instructions will be directed as specified in Section I, Paragraph 1.5. Doors shall be secured to prevent pilferage and theft.
13	Bodies, Water Tank	A, B	SP TR ST	Water tank body. Water tank body shall be cleaned in accordance with Method C-14, using a non-toxic cleaning compound, and dried IAW STD-2073-1D. After cleaning, drains and lower outlets shall be left in open position and openings covered with filter paper or fine mesh aluminum or plastic screen, secured in place with tape conforming to Specification SAE-AMS-T-22085 for Level A and B. Removed drain plugs shall be coated with Type P-14 preservative, and placed in a bag conforming to Type II, Class C of Specification MIL-DTL-117H. Bag will be identified, sealed, and securely attached to one of the faucets; or in a conspicuous location within equipment compartments. Valves, faucets, and forward outlet shall be coated with Type P-14 preservative. Rubber seals of hatches and top openings shall be coated with talc conforming to Type IV, Class C of Specification CID A-A-52518, and forward outlet, hatches, and top openings shall be closed and secured. Equipment compartment drains shall be secured in open position and compartment doors closed and secured to prevent pilferage or damage. For steel tanks (other than stainless or precoated) all interior tank surfaces shall be coated with CID A-A-52518 Type P-14 preservative. **NOTE** Water storage and foam tanks on fire-fighting equipment will be cleaned by any applicable method. Coating will conform to Specification MIL-C-18480B.

Table 8-2. Processing Procedures - Continued

COLUMN I Item	COLUMN II Component	COLUMN III Level	COLUMN IV Type of Vehicle	COLUMN V Processing Required
				WARNING Insecticides are toxic to eyes, skin, and respiratory tract. They shall only be applied by certified Pest Control personnel.
14	Bodies, Passenger Car	A	GP	Protect cloth upholstery by spraying with insecticide. Remove drain plugs from deck of trunk. Protect opening with suitable mesh screen to prevent entrance of insects. Drain plugs shall be coated with MIL-PRF-46002C(1), preservative oil (except rubber plugs), packaged in accordance with 33 of Specification MIL-STD-2073-1 and secured in trunk compartment. Requirements of Item 27, cabs, hard top, apply.
		B	GP	No special processing required.
15	Bodies, Trailer and Truck with Wood Floor	A	AV	Clean upper and lower surfaces of wood floors of foreign matter. Apply a coat of Specification Wood Floor CID A-A-59295 to lower surfaces of floors if unpainted. Top surfaces of unpainted wood floors shall be rubbed down with raw linseed oil, Wood Floor CID A-A-59295. Repeat application each six months or more often if necessary same as Level A requirement above, if necessary.
		B	AV	Same as Level A requirement above, if necessary.
16	Boom Assembly	A, B	SP	a. Shipment. Place block of wood on Wrecker rear frame cross member; lower boom to rest on block of wood. Loosen cables and rewind on drums; secure cable to sheave assembly guide with wire. Remove boom swinger case by removing boom king pin. Remove topping pivot and stow in OVE box. b. Stencil USAF registration number and package number on boom. Booms will be removed on all overseas shipments if practical. On ZI shipments only where requirement exists for reduced cubage will booms be removed. c. Surfaces not requiring paint and subject to corrosion will be treated with corrosion preventive compound. Military Specification CID A-A-59295.

Table 8-2. Processing Procedures - Continued

COLUMN I Item	COLUMN II Component	COLUMN III Level	COLUMN IV Type of Vehicle	COLUMN V Processing Required
17	Boom-Crane	A, B	SP	a. Shipment. Engage the swing lock and lower boom to rest on front cowling frame. Secure by using necessary blocking, and band with not less than 1-1/4-inch banding. If possible, remove front section of boom (to reduce cubage) and secure to rear section of boom with not less than 1-1/4-inch banding. Paint or touch up boom as required with applicable service color. b. Prior to removing boom, place boards 2-inch × 6-inch × length required between crane table and truck bed in sufficient quantity to prevent damage to center bearing. Drop boom to full extent using Tractor steel drum and block of wood at boom tip for mounted support. Disconnect boom and hook cables and rewind cables on drum. Disconnect boom light cable. Remove two boom attaching pins from boom mast using a fork lift truck for support of boom. Start tractor and shift into reverse gear and back tractor from boom Lower boom on a suitable support. Touch up paint, if required. Surfaces not requiring paint and subject to corrosion will be coated with grade I corrosion preventive compound, Specification CID A-A-59295. Stencil USAF registration number and package number on boom.
18	Bows			See Item 8.
19	Brake Systems			Exterior unpainted or threaded surfaces such as cable, clevises, and linkage of service and parking brakes shall be coated with CID A-59295 Type P-l preservative. Place a block on foot and hand brakes to ensure brake cannot be activated.

Table 8-2. Processing Procedures - Continued

COLUMN I Item	COLUMN II Component	COLUMN III Level	COLUMN IV Type of Vehicle	COLUMN V Processing Required
20	Brake Systems, Air	A	AV	Air compressor shall be processed as specified in Item 37. Air reservoirs shall be drained of all condensation and interior surfaces sprayed with atomized MIL-PRF-21260E P-10 Type 1, Grade 30 preservative oil. Drain plugs and threaded openings shall be coated with Type P-10, Type I, Grade 30 preservative oil, and plugs reinstalled. Drain valves shall be left in open position and a warning tag, bearing the information "AIR RESERVOIR DRAIN VALVES OPEN: CLOSE BEFORE OPERATING VEHICLE" shall be securely attached in a conspicuous location within driver's compartment. For other than self-propelled vehicles, tag shall be securely attached in a conspicuous location near identification or data plate. Exposed ends of service air lines and dummy couplings shall be covered with tape conforming to Specification SAE-AMS-T-22085. Air reservoirs shall be drained of all condensation and interior surfaces sprayed with atomized MIL-SAE-AMS-T-21260E, P-10, TYPE 1 Grade 30 preservative oil. Exhaust ports of relay emergency, quick release, and relay valves not equipped with exhaust check valves shall be closed by inserting pipe plugs, or sealed with pressure sensitive tape. A warning tag bearing the information "EXHAUST PORTS CLOSED: REMOVE PLUGS AND TAPE BEFORE OPERATING VEHICLE" shall be securely attached in a conspicuous location within driver's compartment.
		B	AV	No preservation required.
21	Brake Systems, Air-Hydraulic	A	AV	Air-hydraulic, vacuum, and vacuum-hydraulic brakes shall be processed in accordance with the applicable requirements of Items 21 and 23.
		B	AV	Brake system shall be filled with operational hydraulic brake fluid.
22	Brake Systems, Electric	A	AV	Openings and vents of electrical items shall be sealed with tape conforming to Specification SAE-AMS-T-22085. A warning tag, bearing the information "OPENINGS AND VENTS SEALED; REMOVE TAPE BEFORE OPERATING VEHICLE" shall be securely attached in a conspicuous location within driver's compartment.
		B	AV	No preservation required.

Table 8-2. Processing Procedures - Continued

COLUMN I Item	COLUMN II Component	COLUMN III Level	COLUMN IV Type of Vehicle	COLUMN V Processing Required
23	Brake Systems, Hydraulic	A, B	AV	Brake system shall be filled with operational hydraulic brake fluid in accordance with the applicable lubrication instruction for level B. Use MIL-PRF-46176B for level A.
24	Burners-Heater Gas Fired	A, B	SE	Preserve interior surfaces of burners by spraying P-10, Type I, Grade 30 preservative oil into air intake while the blower is in operation.
25	Cables, Battery	A, B	AV	See Items 3 and 4.
26	Cables, Hoist	A, B	SP	See Item 120.
27	Cables, intervehicular (jumper)	A, B	AV	Secure to vehicle with tape, Specification SAE-AMS-T-22085.
28	Cabs, Hard Top	A	AV	Door hinges, latches, and operating mechanisms shall be lubricated with Type P-9 preservative oil. Locks shall be lubricated with molybdenum disulfide conforming to Specification SAE-AMS-M-7866. Inspection access plates shall be removed and all interior surfaces of doors including inner surfaces of access plates, if unpainted, shall be coated with CID A-A-59295 preservative, and access plates reinstalled. Be sure that door drain holes remain open. Windows shall be opened 1/2 inch for ventilation and, when applicable, cab air vents shall be left in open position. Windshield wiper arms and blades shall be removed, and, together with keys, placed in a waterproof bag conforming to type optional, Class B of Specification MIL-DTL-117H, then stowed in dash compartment, or securely attached to steering column.
		B	AV	Windows shall be opened 1/2 inch for ventilation and cab air vents left in open position.

Table 8-2. Processing Procedures - Continued

COLUMN I Item	COLUMN II Component	COLUMN III Level	COLUMN IV Type of Vehicle	COLUMN V Processing Required
29	Cabs, Soft Top and Open Type	A	AV	Except when removal of top is required for shipment, cab shall be processed in accordance with Items 7 and 12. When removed, top shall be thoroughly dried, folded or rolled in a manner to avoid creasing of plastic windows, packaged in accordance with Method IC-5 of Specification MIL-DTL-117H, and packed in a nailed wood box conforming to specification PPP-B-621. Box shall be identified and stowed with other OVE. Windshield wiper arms and blades shall be removed and, together with keys, stowed in dash compartment, and windshield secured in folded down position. When dash compartment is not provided, wiper arms and blades, together with keys, shall be placed in a bag conforming to type optional. Class B, of Specification MIL-DTL-117H and securely attached to steering column. Seat backs and cushions shall be removed and fabric surfaces covered with barrier material. Barrier material shall be secured with tape conforming to SAE-AMS-T-22085, and seat backs with waterproof paper conforming to Specification PPP-B-1055, and paper secured, except at bottom, with tape conforming to Specification SAE-AMS-T-22085. Horn button shall be covered with the same type paper, of a size to completely cover opening around horn button, and paper shall be secured in the same manner as specified for dash panel. Floor mat shall be removed, rolled, tied and stowed on the vehicle. Doors including hinges, latches, seals, locks, operating mechanisms, access plates, and interior surfaces of door accessible through inspection openings shall be processed in accordance with applicable requirements of Item 28. Door glass shall be rolled down to maximum extent and door glass slit sealed with tape conforming to SAE-AMS-T-22085. When top is removed from vehicles equipped with automatic transmissions only, gear shift lever shall be placed in neutral position and exposed machined surfaces shall be coated with grease conforming to Specification MIL-PRF-0924G. Openings in top of shift towers shall be covered with tape conforming to SAE-AMS-T-22085.

Table 8-2. Processing Procedures - Continued

COLUMN I Item	COLUMN II Component	COLUMN III Level	COLUMN IV Type of Vehicle	COLUMN V Processing Required
30	Cases-Transmission, Differential and Transfer	A, B	AV	See Items 46 and 118.
31	Case-Swinger Gear	A, B	SP	Remove drain plugs from wing boom chain housing and check for entrapped water; if inspection reveals water content, drain and flush with type I, Grade 10 oil, Specification MIL-L-21260, and fill with lubricant specified in applicable lubrication chart. Clean surfaces adjacent to upper and lower swing boom housing; cover openings with barrier material conforming to MIL-B-131 and seal with tape conforming to SAE-AMS-T-22085, level B, and MIL-T-22085, level A.
32	Chains, Drive and Exposed Gears	A	SP	Exposed gears, non-precision drive chains, sprockets, and adjusting mechanisms shall be coated with VV-L-800, Type P-9 or MIL-C-16173, P-3 preservative oil to assure penetration to inner surfaces of rollers, pins, and bushings. Excess Type P-9 or P-3 preservative shall be allowed to drain, then entire area shall be coated with MIL-C-16173, Type P-1 preservative.
33	Chains, Tailgate	A, B	GP	Wire rope chains shall be coated with oil conforming to VV-L-7510.
34	Chassis	A, B	AV	Coat uncovered chains with MIL-C-16173 Type P-1 preservative Coat unpainted metal surfaces of fifth wheel plates, sheaves, track idler wheels, side plates, axles, frames, springs, propeller shafts (including splines, slip joints and universal joints), and steering assemblies with MIL-C-62218. Avoid coating rubber or surfaces of friction brakes. If inadvertently applied, clean immediately.
35	Chrome	A, B	CP	Clean and apply a coat of MIL-C-62218. Do not polish.

Table 8-2. Processing Procedures - Continued

COLUMN I Item	COLUMN II Component	COLUMN III Level	COLUMN IV Type of Vehicle	COLUMN V Processing Required
36	Clutch	A	AV	Clutch pedal, with gear shift in NEUTRAL position, shall be depressed a distance sufficient to remove free play, and then depressed 1 to 1-1/2 inches more. Pedal shall be secured in depressed position by wiring to floor board plates; or by wiring a wood block to pedal shaft beneath floor board. Flywheel housing drain plug shall be removed and coated with Type P-1 preservative. Drain plug, together with a warning tag bearing the information "FLYWHEEL HOUSING DRAIN PLUG REMOVED: REINSTALL BEFORE PLACING VEHICLE IN SERVICE", shall be securely attached in a conspicuous location within driver's compartment. When a threaded boss is provided in flywheel housing adjacent to drain hole, removed drain plug shall be installed in threaded boss. A warning tag, bearing the information "FLYWHEEL HOUSING DRAIN PLUG REMOVED AND INSTALLED ADJACENT TO DRAIN HOLE: REINSTALL IN DRAIN HOLE BEFORE PLACING VEHICLE IN SERVICE", shall be securely attached in a conspicuous location within driver's compartment. Do not block two-way tractor clutches after placing in neutral position. Do not completely depress clutch pedals as prolonged compression of clutch springs may cause a permanent set. Be sure gear shift levers are in neutral position. Where storage experience indicates a need for additional measures, the following options may be specified by the responsible AF storage or Vehicle Fleet Manager.. a. Clutch may be disassembled. If disassembled, metal surfaces of operating parts, including clutch collars, linkage, pins, flywheel ring gear and starter drive shall be coated with a thin film primer, Specification TTP-664. b. Remove clutch cover plates and, with the clutch engaged, spray a thin film of primer, TTP-664, on all accessible metal surfaces within the housing.

Table 8-2. Processing Procedures - Continued

COLUMN I Item	COLUMN II Component	COLUMN III Level	COLUMN IV Type of Vehicle	COLUMN V Processing Required
37	Compressor, Air	A	AX	Where the lubricating system is separate from the associated power unit, air compressor crankcase shall contain MIL-L-21260 P-10 perseverative oil only, grade 10 or 30, as applicable, filled to operating level. Compressor air cleaner shall be removed and air intake and outlet disconnected. While engine is being operated during preservation, P-10, Type I, Grade 30 preservation oil shall be sprayed into compressor air intake and outlet shall be reconnected. Compressor air cleaner (oil bath type) shall be preserved as specified in Item 1 and reinstalled.
		B	AX	Air compressor crankcase shall contain lubricating oil conforming to requirements of applicable drawing, specification, or lubrication order filled to operating level. When crankcase contains Type P-10 preservative oil, operating level shall be attained by addition the same type oil, or lubricating oil conforming to Specification MIL-L-2104.
38	Containers-Spare Fuel	A	AV	Drain, clean thoroughly and flush with Type I, Grade 30, P-10 preservative oil. Install cap and tighten securely.
		B	AV	No preservation required.
39	Control Cable	A	AV	Wipe choke and throttle control cables with cloth saturated with Type P-9 preservative oil.
40	Cooling Systems	A, B	AV	Cooling systems shall be protected in accordance with paragraph a. below, unless otherwise directed by the responsible officer or as necessary to comply with requirements of shipping directives.

Table 8-2. Processing Procedures - Continued

COLUMN I Item	COLUMN II Component	COLUMN III Level	COLUMN IV Type of Vehicle	COLUMN V Processing Required
				WARNING Ethylene glycol is toxic to skin, eyes, and respiratory tract. Avoid skin and eye contact. Good general ventilation is normally adequate.
40-Continued				a. Water and antifreeze procedure. Cooling systems shall contain a clean solution consisting of antifreeze (ethylene glycol) conforming to CID A-A-52624, and water mixed to a ratio adequate to withstand the coldest temperature for that location and shall be filled to capacity. Engine shall be operated to assure coverage of all interior parts and surfaces. When cooling systems is thermostatically controlled, engine shall be operated until a temperature has been reached that causes thermostat to open, assuring complete mixing and even distribution of the antifreeze solution. All vehicles with antifreeze installed by the procedures outlined herein will be marked, using the following format. This marking should be located as close as possible to the cooling system fill neck. It must also be located, if possible, so as not to detract from vehicle appearance and yet be readily visible to personnel checking and/or servicing the system. ANTIFRZ A-5-97 The above format will be cut in 1/2-inch letters and applied with white paint. Line number one containing the phrase ANTIFRZ will be standard in all applications. The information contained in line number two will vary: The first letter will be either A or C, depending on the type antifreeze used. The remainder of that line will contain, in numerical code, the month and year in which the system was serviced. For example: A-5-97 in the above format means Arctic antifreeze was installed in May 1997. C-5-92 means antifreeze, CID A-A-52624, was installed in May 1992. b. Antifreeze compound procedure. For shipment and storage in areas where the temperature drops below −40 °F, cooling system shall be filled with antifreeze compound conforming to Specification CID A-A-52624. The compound shall be used without dilution.

Table 8-2. Processing Procedures - Continued

COLUMN I Item	COLUMN II Component	COLUMN III Level	COLUMN IV Type of Vehicle	COLUMN V Processing Required
40 - Continued				c. Water and corrosion inhibitor procedure. For shipment and storage within the bounds of 30 degrees north latitude and 30 degrees south latitude, except continental United States, cooling system shall be preserved as follows. Prior to, or concurrently with other preservation required engine operation, cooling system shall be filled with clear water up to, but not including, the radiator upper tank. A corrosion inhibitor conforming to Specification O-I-490 shall be added in the proportion of 5 ounces of the inhibitor for each 10 quarts of water. The inhibitor shall be dissolved in 2 quarts of warm water and poured into the radiator while the engine is idling. More water shall be added, if necessary, to fill the radiator to operating level. A warning tag, bearing the information "COOLING SYSTEM DOES NOT CONTAIN ANTIFREEZE FILLED WITH WATER AND INHIBITOR", shall be securely attached to radiator filler neck. d. Preservative and drain procedure. Cooling system shall be filled with Type P-3 preservative prior to engine preservation. After engine preservation, cooling systems shall be drained and drain cocks left in open position. A warning tag, bearing the information "CLOSE DRAIN COCKS AND FILL COOLING SYSTEM BEFORE OPERATING ENGINE", shall be securely attached in a conspicuous location within driver's compartment. e. Cooling systems exhibiting obvious leaks shall be repaired. Minor leaks may be eliminated by adding leak preventive compound conforming to Specification O-L-460.
41	Covers and Curtains, Cargo, Soft Top Vehicles			See Items 8, 11 and 29.
42	Covers, Manhole	A, B	SP	Close and seal. Protect against tampering with wire type railroad car seal prior to shipment.
43	Crankcase Engine	A	AV	Engine crankcase shall contain MIL-L-21260 Type P-10 preservative oil, Type I, Grade 10, 30 or 50, as applicable, filled to operating level.

Table 8-2. Processing Procedures - Continued

COLUMN I Item	COLUMN II Component	COLUMN III Level	COLUMN IV Type of Vehicle	COLUMN V Processing Required
43-Continued		B	AV	Engine crankcase shall contain lubricating oil conforming to requirements of applicable drawing, specification, or lubrication order, filled to operating level. When crankcase contain Type P-10 preservative oil, Type I, Grade 10 or 30, as applicable, operating level shall be attained by addition of the same grade oil, or lubricating oil conforming to Specification MIL-PRF-2104H.
44	Cushions and Seat Back			Seat See Items 11, 14 and 29.
45	Dash Panel Including Defroster Vents			See Item 11.
46	Differentials, Transfer assemblies and power-take off assemblies and other gear driven units except those lubricated by the units to which they are attached	A, B	AV	Fill to operating level with applicable grade of lubricant conforming to Specification MIL-L-2105 and operate at sufficient speed to assure lubricant coverage of all interior parts and surfaces.
47	Doors			See items 7, 28 and 29.
48	Drives, Gear Chain			See Item 52.
49	Drums, Brake Interior Surface	A		See Item 20.

Table 8-2. Processing Procedures - Continued

COLUMN I Item	COLUMN II Component	COLUMN III Level	COLUMN IV Type of Vehicle	COLUMN V Processing Required
50	Drums, Cable	A, B	SP	**WARNING** Preservative oil, VV-L-800 is toxic to skin, eyes, and respiratory tract. Avoid skin and eye contact. Good general ventilation normally adequate. Coat all exposed unpainted metal surfaces of cable drums with Type P-1 preservative oil. Wire cable not previously coated shall be unreeled and coated with Type P-1 preservative oil. Allow to dry, rewind, and secure. Where additional protection is considered essential, cover the rewound cable with waterproofed wrapping paper conforming to Specification PPP-B-1055, scaled to adjacent outer surface of drum flange with tape, SAE-AMS-T-22085 for level B and MIL-T-22085 for level A. Leave a 2-inch gap underneath the drum for drainage.
51	Engines, Diesel	A, B	AV	Engine fuel intake line shall be disconnected at the most easily accessible point nearest the fuel tank, and a line from a portable container of diesel fuel conforming to Specification VV-F-800 shall be connected to the line leading to engine. Injector fuel return line shall be disconnected at the quick disconnect coupling. A line shall be provided and connected to the injector fuel return quick disconnect coupling to permit draining into a recovery container. Recovered fuel-oil mixture shall not be used for preserving other engines. Engine shall be started and operated at fast idle, without load, until thoroughly warm. Engine shall be accelerated to 3/4 speed, at the same time fuel supply shall be switched to VV-L-800 Type P-9 preservative oil. Engine shall be operated until entire fuel system and internal operating surfaces are coated with the preservative oil. Engine shall be stopped and fuel lines reconnected. Prior to continuation of preservation, engine shall be cooled to a maximum cylinder head temperature of 100 °F. Cooling may be accelerated by use of induced air currents. Preservation shall then be continued in accordance with one of the following methods, as applicable:

Table 8-2. Processing Procedures - Continued

COLUMN I Item	COLUMN II Component	COLUMN III Level	COLUMN IV Type of Vehicle	COLUMN V Processing Required
51-Continued				a. Four-cycle, gasoline-starting diesel engine. Spark plugs shall be removed, exercising maximum care in handling to avoid damage to threads and electrodes during preservation. Engine controls shall be positioned for gasoline operation and diesel throttle completely closed. While engine is being cranked with starting motor, one ounce of P-10, Type I, Grade 30 preservative oil shall be atomized sprayed into each cylinder through spark plug openings. Injectors (and pre-combustion cups, when necessary) shall be removed. Engine controls shall be positioned for diesel operation. While engine is being cranked with starting motor, two ounces of the same type and grade preservative oil shall be atomized sprayed into each cylinder through the injector opening. Engine shall be cranked with starting motor for at least five complete revolutions after spraying the last cylinder. Without cranking, two additional ounces of P-10, Type I, Grade 30 preservative oil shall be atomized sprayed into each cylinder through spark plug opening. Threaded ends of spark plugs, injectors, and pre-combustion chambers shall be coated with the same type and grade preservative oil and plugs, injectors, and pre-combustion chambers reinstalled. Engine controls shall then be positioned for diesel operation. A warning tag, bearing the information “ENGINE PRESERVED; DO NOT CRANK”, shall be securely attached in a conspicuous location within driver’s compartment.

Table 8-2. Processing Procedures - Continued

COLUMN I Item	COLUMN II Component	COLUMN III Level	COLUMN IV Type of Vehicle	COLUMN V Processing Required
51-Continued				b. Four-cycle, straight-diesel engines with openings, other than fuel injectors and valves, into combustion chambers and cylinders. Diesel throttle shall be completely closed. Covers, plugs, or flanges over openings shall be removed and, while engine is being cranked with starting motor, two ounces of P-10, Type I, Grade 30 preservative oil shall be atomized sprayed into each cylinder through the opening. Without cranking, two additional ounces of P-10, Type I, Grade 30 preservative oil shall be atomized sprayed into each cylinder through the openings. Interior surfaces of covers shall be coated with the same type and grade preservative oil, and covers reinstalled. A warning tag, bearing the information “ENGINE PRESERVED; DO NOT CRANK”, shall be securely attached in a conspicuous location within driver’s compartment. c. Four-cycle, straight-diesel engines without openings, other than fuel injectors and valves, into combustion chambers and cylinders. Preservation shall be accomplished by one of the following two methods. The practicability of method (1) will depend on the ease with which injectors can be removed, and on the size of openings in the pre-combustion chambers. If these openings are too small to effectively admit and distribute the preservative oil, the precombustion chambers will require removal; and the practicability of this procedure will then depend on the ease with which the precombustion chambers can be removed, as opposed to method (2), involving removal of manifolds.

Table 8-2. Processing Procedures - Continued

COLUMN I Item	COLUMN II Component	COLUMN III Level	COLUMN IV Type of Vehicle	COLUMN V Processing Required
51-Continued				(1) Diesel throttle shall be completely closed. Injectors, or injectors and pre-combustion chambers, as applicable, shall be removed and coated with P-10, Type I, Grade 30 preservative oil, exercising maximum care in handling to avoid damage to injectors and pre-combustion chambers during preservation. While engine is being cranked with starting motor, two ounces of P-10, Type I, Grade 30 preservative oil shall be atomized sprayed into each cylinder through the openings. Injectors, or injectors and precombustion chambers, as applicable, shall be reinstalled. A warning tag, bearing the information "ENGINE PRESERVED; DO NOT CRANK", shall be securely attached in a conspicuous location within driver's compartment. (2) As an alternative, when method (1) is found to be impractical, the following shall be accomplished: Diesel throttle shall be completely closed. Intake or exhaust manifold or both, shall be removed and, when applicable, compression release secured in release position. While engine is being cranked with starting motor, two ounces of P-10, Type I, Grade 30 preservative oil shall be atomized sprayed into each cylinder through intake valve at the time valve opens. Engine shall be cranked with starting motor until intake or exhaust valve into each cylinder is open. Without cranking, two ounces of P-10, Type I, Grade 30 preservative oil shall be atomized sprayed into open port each cylinder. Compression release shall be freed and manifolds reinstalled. A warning tag, bearing the information "ENGINE PRESERVED; DO NOT CRANK", shall be securely attached in a conspicuous location within driver's compartment.

Table 8-2. Processing Procedures - Continued

COLUMN I Item	COLUMN II Component	COLUMN III Level	COLUMN IV Type of Vehicle	COLUMN V Processing Required
51-Continued				d. Two-cycle diesel engines. Diesel throttle shall be completely closed. Air-box cover(s) shall be removed from side of engine opposite the blower. Engine shall be cranked with starting motor until piston in cylinder to be sprayed is below intake ports. Procedure shall be repeated for each cylinder. Engine shall be cranked with the starting motor for at least three complete revolutions after spraying the last cylinder. Complete cycle of spraying into cylinders shall be repeated except that engine shall be cranked with the starting motor for not more than one complete revolution after spraying the last cylinder. Interior surfaces of air-box cover(s) shall be coated with the same type and grade preservative oil and reinstalled. A warning tag, bearing the information “ENGINE PRESERVED; DO NOT CRANK”, shall be securely attached in a conspicuous location within driver’s compartment.

Table 8-2. Processing Procedures - Continued

COLUMN I Item	COLUMN II Component	COLUMN III Level	COLUMN IV Type of Vehicle	COLUMN V Processing Required
				WARNING Gasoline is flammable and toxic to eyes, skin, and respiratory tract. Avoid skin and eye contact. Good general ventilation is normally adequate. Keep away from open flames or other sources of ignition.
52	Engines, Gasoline	A, B	AV	Engine fuel intake line shall be disconnected at the most convenient engine location. (For injector type engine, injector fuel return line shall be disconnected at the quick disconnect coupling. A line shall be connected to the injector fuel return quick disconnect coupling to permit draining into a recovery container. Recovered fuel-oil mixture shall not be used for preserving other engines.) Engine shall be started and operated at fast idle until running smoothly, then accelerate to 3/4 speed without load, at the same time fuel supply, shall be switched to VV-L-800 Type P-9 preservative oil. The instant the engine begins to misfire, turn off ignition and disconnect line from portable container engine, and vehicle fuel line reconnected. Prior to continuation of preservation, engine, shall be cooled to a cylinder head temperature of not more than 100 °F. Cooling may be accelerated by use of induced air currents. Spark plugs shall be removed, exercising maximum care in handling to avoid damage to threads and electrodes during preservation. While engine is being cranked with starting motor, two ounces of P-10, Type I, Grade 30 preservative oil shall be atomized sprayed into each cylinder through spark plug openings. Without cranking, two additional ounces of the P-10, Type I, Grade 30 preservative oil shall be atomized sprayed into each cylinder, threaded ends of spark plugs shall be coated with the same type and grade preservative oil and plugs reinstalled. A warning tag, bearing the information “ENGINE PRESERVED; DO NOT CRANK”, shall be securely attached in a conspicuous location within the driver’s compartment.

Table 8-2. Processing Procedures - Continued

COLUMN I Item	COLUMN II Component	COLUMN III Level	COLUMN IV Type of Vehicle	COLUMN V Processing Required
52-Continued		B		Generally vehicles in storage for 90 days or less should not require extreme measures of protection. It is recommended that the fuel be drained to approximately five (5) gallons or drained completely. Before storage an additive of type P-9 preservative oil or SAE-J2362 heavy duty engine oil will be added to the fuel (approximately two quarts per five gallons fuel). Start engine and run at fast idle until engine starts to misfire or heavy smoke comes from the exhaust. The ignition switch shall be immediately turned off. Upon returning vehicle to service fill fuel tank to reduce lubrication and return vehicle to service.
53	Engines Dismounted or Boxed Equipment	A, B	AV	Process in accordance with TO 38-1-5.
54	Equipment			See Item 83 (On Vehicle Equipment).
55	Exhaust System	A	AV	Unpainted surfaces of exhaust system, except manifold, shall be coated with Type P-1 preservative or enamel conforming to Specification MIL-E-5557. When required for reduction in cube, upper section of vertical tailpipe shall be removed, coated with Type P-1 preservative, and stowed with other OVE. Opening of vertical tailpipes, unless protected by a rain-cap, or opening left by disassembly, shall be sealed with tape conforming to Specification MIL-T-22085.
		B	AV	When required for reduction in cube, upper section of vertical tailpipe shall be removed, coated with Type P-1 preservative, and stowed with other OVE. Opening of vertical tailpipes, unless protected by a rain-cap or opening left by disassembly, shall be sealed with tape conforming to Specification SAE-AMS-T-22085.
56	Extinguishing, Fire	A, B	AV	All portable hand type fire extinguishers shall be packaged in accordance with Method IC-5 of MIL-P-116 and packed in OVE boxes, except those mounted in equipment compartments adequately protected against pilferage during transit and storage. Boxes shall be clearly marked to indicate contents and date of last cylinder test.
57	Fifth Wheels	A, B	GP SP	Coat unpainted surfaces of fifth wheels and upper fifth wheel plates and king pins with Type P-1 preservative.

Table 8-2. Processing Procedures - Continued

COLUMN I Item	COLUMN II Component	COLUMN III Level	COLUMN IV Type of Vehicle	COLUMN V Processing Required
58	Forks	A, B	MH	Remove and secure to vehicle using minimum flat steel strapping conforming to Specification QQ-S-781 to reduce shipping cube. Coat unpainted surfaces with Type P-1 preservative.
59	Fuel Tanks, Refueler body	A, B	SP	See Item 10.
60	Fuel Tanks	A	AV	Process by either of the following methods vehicular applicable: a. Fuel tanks shall be completely drained of fuel, filled with P-10, Type I, Grade 30 preservative oil, and again drained. Tank shall be allowed to stand with drain plug removed until oil flow ceases. Plug shall be coated with the P-10, Type I, Grade 30 preservative oil and reinstalled. Drained preservative oil may be reused for processing of other gasoline fuel tanks provided not more than 10 percent of the resultant fluid is gasoline. b. Fuel tanks shall be completely drained of fuel and atomized sprayed with Type I, Grade 30 preservative oil, using atomizing equipment with an extension nozzle which will assure complete coverage of all interior surfaces. Tank shall be allowed to stand with drain plug removed until oil flow ceases. Plug shall be coated with the P-10, grade preservative oil and reinstalled. Unless draining of tanks is specified, residual fuel may remain in the tank.
61	Gears, Exposed			See Item 32.
62	Gear Boxes			See Items 46 and 118.
63	Grills	A, B	AV	Outside Storage and Shipment. Grilles (louvers) around and over engine and control compartments which allow entry of water will be covered with waterproofed paper conforming to Specification PPP-B-1055, secured with tape, Specification SAE-AMS-T-22085 for level B, MIL-T-22085 for level A. On vertical panels where ventilation is desired the tape will not be applied at bottom edge.
64	Hardware, Hinges, etc.	A, B	AV	Lubricate and coat unpainted machined surfaces with Type P-9 preservative oil.
65	Horn Button	A	AV	See Items 11 and 29.
		B	AV	No processing required.

Table 8-2. Processing Procedures - Continued

COLUMN I Item	COLUMN II Component	COLUMN III Level	COLUMN IV Type of Vehicle	COLUMN V Processing Required
66	Hose, Gasoline and Fire (Except oxidizer transfer or propellant system servicing)	A	SP	a. Disconnect hose and drain, clean, and dry with dry, oil free, compressed air or other acceptable means. Replace gaskets as necessary and reconnect. b. For storage within compartments, cover discharge end of hose and coupling with barrier conforming to Grade A, Class 2 of Specification MIL-B-121 secured with tape conforming to Specification MIL-T-22085. c. Where the hose may be exposed to the weather, discharge ends and couplings prepared as above shall be over-wrapped with barrier conforming to MIL-B-131, Class 1, sealed with tape conforming to Specification MIL-T-22085. Exposed reels or storage compartments not provided with waterproof covers shall be protected with shrouds fabricated from barrier material conforming to E3 or E4 of Specification PPP-B-1055.
		B	SP TR ST	Hose exposed to the weather will be processed in accordance with Level A, subparagraph c above.
67	Hose, Oxidizer Transfer or Propellant System Servicing	A, B	SP TR ST	Request information from prime agency for end item.
	Hoses, Air, Braided and Nylon	A, B	SP TR ST	Loose air lines shall be secured near to components and connected with tape conforming to SAE-AMS-T-22085 or placed within vehicle if too long or weighty. Hose bend radius shall not exceed one foot. Tape ends shall have dummy connectors inserted and taped with SAE-AMS-T-22085 for level B, MIL-T-22085 for level A.
68	Hydraulic Systems Materials Handling Equipment	A	MH	a. Process in accordance with: (1) When the hydraulic system is filled to operating level with MIL-H-46170 hydraulic oil the system shall be operated to ensure coating of inner surfaces. A waterproof tag shall be secured to the vehicle in a conspicuous location. The tag shall read as follows:

Table 8-2. Processing Procedures - Continued

COLUMN I Item	COLUMN II Component	COLUMN III Level	COLUMN IV Type of Vehicle	COLUMN V Processing Required
				CAUTION The hydraulic system of this equipment is filled with MIL-H-46170 and need not be drained before operation. When placing in operation and refilling hydraulic system, if leaks develop around packing gland, do not tighten gland nut until packing has a chance to soak up with oil. Cracking or breaking of the packing may occur and require replacement of the packing.
68-Continued				(2) System with oil returns. Drain system and refill with P-10, Type I, Grade 10 preservative oil. Operate to Insure coating of all surfaces. Connect temporary line from high pressure outlet of control valve to lower connection of the oil return line tube. Remove one Allen head screw or air bleed screw at top of hoist and, with engine at idle, slowly move control valve lever to up position allowing oil from reservoir to flow through oil return line and completely fill the lift cylinder above the piston. Replace the screw; remove the temporary line and connect the high pressure line and oil return line in their proper positions. Mark machine in a conspicuous location with a waterproof tag reading as follows:

Table 8-2. Processing Procedures - Continued

COLUMN I Item	COLUMN II Component	COLUMN III Level	COLUMN IV Type of Vehicle	COLUMN V Processing Required
				CAUTION The hydraulic system of this equipment is filled with preservative oil conforming to Type P-10, Grade 1, of Specification MIL-P-116. Drain oil from upper part of lift cylinder by slowly raising the upright assembly so that the cylinder piston is in the topmost position. This will allow the oil to return to the oil reservoir by the oil return line. Under normal conditions this oil may be used in the operation of the equipment.
68-Continued				(3) Systems without oil return. (Hydraulic systems equipped with multiple lift cylinders, triple cylinders, or completely sealed single cylinders, without oil return lines.) Drain hydraulic fluid and replace with P-10, Type I, Grade 10 preservative oil. Operate system to insure coating of inner surfaces. Mark the machine in a conspicuous location with a waterproof tag as follows: **CAUTION** The hydraulic system of this equipment is filled with preservative oil conforming to Type P-10, Grade 3 of Specification MIL-P-116. Under normal conditions this oil may be used in the operation of the equipment.
		B	MH	b. Upright masts and booms. Extend full length and coat sliding contact areas with automotive and artillery grease, Specification MIL-G-10924. Close to shortest length and secure. Coat all exposed unpainted surfaces with Type P-1 preservative.

Table 8-2. Processing Procedures - Continued

COLUMN I Item	COLUMN II Component	COLUMN III Level	COLUMN IV Type of Vehicle	COLUMN V Processing Required
				WARNING Hydraulic fluid, MIL-H-83282 is toxic to skin, eyes, and respiratory tract. Avoid skin and eye contact. Good general ventilation normally adequate. Fill to operational level with MIL-H-83282 hydraulic fluid and operate to insure coating of inner surfaces.
69	Inverted Trailers	A, B	TR	a. When cargo or other trailers are to be inverted for shipment, filler plug and vent assembly shall be removed from hydraulic brake master cylinder and solid plug installed using two compression type copper gaskets to prevent loss of brake fluid. Filler plug and vent assembly shall be coated with P-10, Type I, Grade 30 preservative oil, packaged in accordance with Method IC-1 of Specification MIL-P-116, and secured to master cylinder. A warning tag, bearing the information "MASTER CYLINDER FILLER PLUG AND VENT ASSEMBLY SECURED TO MASTER CYLINDER; REINSTALL BEFORE PLACING VEHICLE IN SERVICE", shall be securely attached to trailer-to-vehicle brake line connection. Exposed ends of airplane type shock absorbers shall be covered with tape conforming to Specification SAE-AMS-T-22085 for level B, MIL-T-22085 for level A. When required for shipment, wheels of inverted trailer shall be removed and secured to trailer bed. When removed, racks shall be stowed and secured in a manner that will not increase cubage.
			ST	b. Ensure that drain holes are provided where necessary to prevent accumulation of water, i.e. fenders.
70	Jacks Outrigger	A	SP	Coat screw surfaces with Type P-9 preservative oil. Remove outriggers and coat internal unpainted surfaces of tubes and unpainted surfaces of outrigger beams with Type P-1 preservative.
		B	SP	No preservative required.
71	Keys	A, B	AV	Unless otherwise specified, keys may be stowed in dash compartment. When no dash compartment is provided, keys shall be placed a waterproof bag (conforming to MIL-B-13239, Type B-2, material). The bag shall be securely attached to the steering column.

Table 8-2. Processing Procedures - Continued

COLUMN I Item	COLUMN II Component	COLUMN III Level	COLUMN IV Type of Vehicle	COLUMN V Processing Required
72	Lamps, Lights and Reflector Lenses	A, B	AV	a. For rail shipment only, exterior lamps, lights, and reflector lenses shall be completely covered with Kraft paper. The paper shall be covered and secured with tape conforming to Specification SAE-AMS-T-22085, level B, MIL-T-22085 level A. b. Lamps, lights, and reflector lenses removed from the vehicle shall be preserved in accordance with Method IC-5 of Specification MIL-P-116.
73	Landing Gear	A, B	ST	Coat all exposed unpainted machined metal surfaces and threaded surfaces requiring occasional turning in operation of the unit with grease conforming to Specification MIL-G-10924. Exposed unpainted non-critical surfaces shall be coated with Type P-1 preservative.
74	Levers, Gear	A	AX	a. Place lever in disengaged position. To prevent water from entering transmissions through unprotected openings, seal openings with waterproof tape conforming to Specification MIL-T-22085. Openings too large to tape may be shrouded with waterproof paper conforming to MIL-B-13239, grade B, sealed to the shift lever and secured over the tower using the same type tape as above. b. Lubricate operating parts with grease conforming to Specification MIL-G-10924. Coat unpainted metal surfaces of hand grips, handles and levers with Type P-1 preservative.
75	Lights	A, B	AV	See Item 72.
76	Locks (Including Padlocks) and Latches	A, B	AV	Locks and padlocks shall be lubricated with molybdenum disulfide conforming to Specification MIL-M-7866. Latches shall be lubricated with VV-L-800 Type P-9 preservative oil. Unpainted metal exterior surfaces shall be coated with Type P-1 preservative.
77	Mats, Floor	A	AV	Floor mat shall be removed from soft-top or open-cab vehicles, rolled, tied, and packed and stowed as prescribed for OVE.
		B	AV	No processing required.
78	Mirrors, Rear View	A, B	AX	Mirrors need not be removed for storage. For rail or surface water shipment, removal of mirrors is recommended to prevent breakage of pilferage. Removed mirrors will be properly cushioned, packaged in fiberboard boxes, and stowed in the driver's or passenger's compartment of hard-top vehicles or packed and stowed for soft top vehicles with other boxed material.

Table 8-2. Processing Procedures - Continued

COLUMN I Item	COLUMN II Component	COLUMN III Level	COLUMN IV Type of Vehicle	COLUMN V Processing Required
79	Motors, Air (except windshield wiper)	A	SE	Disconnect air line to each air motor at the connection. Atomize spray interior of motor with grade 1, P-10 preservative oil.
		B	SE	No processing required.
80	Motors, Electric	A, B	SE	a. Seal all openings to electric windings with tape, Specification SAE-AMS-T-22085 level B, MIL-T-22085. Affix a warning tag "REMOVE PACKAGING TAPE PRIOR TO OPERATION". Openings of explosion-proof, spray-tight, totally enclosed, and watertight fan cooled motors where cooling air does not flow over the windings need not be taped. b. Apply Type P-1 preservative to unpainted external metal surfaces. **CAUTION** Do not permit preservative on any rotating part from which it may be thrown on the windings. Insulating varnish, Specification MIL-V-24092, shall be applied to such parts. c. Shafts and rigid couplings shall be coated with Type P-1 preservative. Flexible couplings shall be coated with grease, Specification MIL-G-10924.
81	Mufflers			See Item 55.
82	Nozzles-Fuel Servicing and Crash Fire	A	SP	a. Installed (turret, bumper, underbody, etc.) nozzles not requiring removal to reduce cubage or prevent breakage or pilferage in transit shall be coated with Type P-3 preservative and wrapped and cushioned with barrier material, Specification MIL-B-121, grade A. Protective covers provided shall be secured in place. When no such cover is provided, the nozzle, preserved as above, shall be over-wrapped with barrier material conforming to Specification MIL-B-13239, Type B-2, grade and class optional, secured with tape conforming to Specification MIL-T-22085.
82-Continued				b. Nozzles within waterproof compartments. Coat with Type P-9 preservative; seal openings with tape conforming to Specification MIL-T-22085 and secure in place. c. When the measures outlined above are not practical, nozzles will be preserved in accordance with a, above, and packed with the OVE.

Table 8-2. Processing Procedures - Continued

COLUMN I Item	COLUMN II Component	COLUMN III Level	COLUMN IV Type of Vehicle	COLUMN V Processing Required
		B	SP	No processing required.
83	On Vehicle Equipment	A, B	AV	a. Unless otherwise specified, OVE shall be preserved, packaged, packed and marked in accordance with the Level A requirements of Specification MIL-P-12841. Where treatment of a specific item is covered elsewhere in this TO and conflicts with that prescribed in MIL-P-12841, the provisions herein will control. b. Storage. OVE may be removed for inside storage when determined necessary by the responsible storage officer. If so, the equipment for each vehicle shall be segregated and the vehicle shall be tagged, "OVE INCOMPLETE REPLACE PRIOR TO OUTSHIPMENT". When OVE is left in or on the vehicle, it shall be stored in a protected location, if available. When storage space inside closed cabs or bodies or within waterproof compartments is used, the requirements for waterproofing of the exterior container covers is waived, provided the OVE can remain as stored throughout shipment. When exposed storage of OVE boxes is necessary, cleats or skids will be placed beneath the boxes to protect against contact with accumulated moisture. c. Shipment. OVE boxes shall be secured to prevent shifting during loading, transit, and unloading operations. Every effort will be exerted to so position the boxes that shipping cubage is held at an absolute minimum. Boxes containing electrolyte, batteries, or other dangerous items shall be located to facilitate inspection or removal if necessary. It is recommended that strapping be applied to boxes only at time of out-shipment.
84	Padlocks	A, B, C	AV	See Item 76.
85	Painting	A, B	AV	See Chapter 6.
86	Panels and Instruments			a. Treatment of dash panels is covered under Bodies. Control and instrument panels which are housed in cabinets or in compartments with access doors shall have controls or instrument faces protected with adequate cushioning and the openings around the door or cover sealed with pressure-sensitive tape conforming to Specification SAE-AMS-T-22085, level B, MIL-T-22085, level A.

Table 8-2. Processing Procedures - Continued

COLUMN I Item	COLUMN II Component	COLUMN III Level	COLUMN IV Type of Vehicle	COLUMN V Processing Required
				b. Exposed control panels or instruments shall be afforded adequate physical protection as required. Where panels or instruments project so as to present a breakage in transit problem, a protective housing or framework shall be fabricated of lumber or plywood. Each control, knob, dial face, or Gauge shall be cushioned as required. (See USAF Specification Bulletin 56 for selection of available cushioning agents.) The panel or instrument shall be covered with a shroud fabricated from waterproofed Kraft wrapping paper conforming to Specification PPP-B-1055 or other waterproof barrier listed in USAF Specification Bulletin 56. c. For extended storage, it is recommended that water-vapor proof barriers and tapes be used and that the sealed housings or shrouds be provided with humidity indicators and MIL-B-3464 desiccant as specified for Method II of Specification MIL-P-116.
87	Pintles	A, B	AV	Lubricate and coat exposed unpainted surfaces with Type P-1 preservatives.
88	Plates, Identification	A, B	AV	Data plates in exposed locations on instrument panels, bodies, engines, accessories, etc., shall be covered with a thin coat of varnish conforming to Specification MIL-I-24092.
89	Power Take-Off Assembly	A, B	AV	See Item 46 Differentials.
90	Publications	A, B	AV	a. Publications shall be assembled and packaged in accordance with Method IC-3 of Specification MIL-P-116 and stored in OVE containers. Applicable technical orders or technical manuals, will accompany the vehicle when shipped. b. Vehicle historical record and other applicable forms will be packaged Method IC-3 and attached to vehicle FM/TO

Table 8-2. Processing Procedures - Continued

COLUMN I Item	COLUMN II Component	COLUMN III Level	COLUMN IV Type of Vehicle	COLUMN V Processing Required
91	Pumping System. Fuel (except cryogenic liquids)	A	SE	a. All interior surfaces of fuel transfer pump shall be sprayed with P-10, Type I, Grade 30 preservative oil. Manifold valves shall be placed in open position. Pump and sump drain plugs shall be removed, coated with P-10, Type I, Grade 30 preservative oil, and placed in a bag conforming to Type II, Class C of Specification MIL-B-117 and identified. A warning tag, bearing the information "PUMP AND SUMP DRAIN PLUGS REMOVED: REPLACE BEFORE OPERATING ENGINE AND PUMP", shall be securely attached, together with bag, in a conspicuous location on the pump. With the engine cooled to a temperature of not more than 100 °F, the following shall be accomplished: (1) Engine crankcase shall contain P-10, Type I, Grade 10 or 30 preservative oil, as applicable, filled to operating level. (2) Spark plugs shall be removed, exercising maximum care in handling to avoid damage to threads and electrodes during preservation. (3) While engine is being cranked manually, two ounces of P-10, Type I, Grade 30 preservative oil shall be atomized sprayed into each cylinder through spark plug opening. (4) Without cranking, one additional ounce of P-10, Type I, Grade 30 preservative oil shall be atomized sprayed into cylinders; threaded ends of spark plugs shall be coated with the same grade preservative oil and plugs reinstalled. (5) A warning tag, bearing the information "ENGINE PRESERVED: DO NOT CRANK DO NOT OPERATE ENGINE AND PUMP WITHOUT FLUID IN PUMPING SYSTEM", shall be securely attached in a conspicuous location on pumping system. (6) Sediment bowl and fuel line of engine fuel tank shall be completely drained of fuel. (7) Fuel tank shall be preserved in accordance with the applicable requirements of Item 60.

Table 8-2. Processing Procedures - Continued

COLUMN I Item	COLUMN II Component	COLUMN III Level	COLUMN IV Type of Vehicle	COLUMN V Processing Required
91-Continued		B	SE	b. Fuel pumping system shall be preserved in accordance with (a) above, except that engine crankcase shall contain lubricating oil conforming to requirements of applicable drawing, specification, or lubrication order, filled to operating level. When crankcase contains P-10 preservative oil. Type I, Grade 10 or 30, as applicable, operating level shall be attained by addition of the same grade oil or lubricating oil conforming to Specification MIL-PRF-2104H.
92	Pumping Systems	A, B	SE	Interior surfaces of centrifugal, reciprocating, water and rotary pumps; including impellers, rotors, rotor shafts, pistons, piston rods, air chambers, vanes, vane slots, valves, valve rods, thrust pins, cylinder walls, oil-air-steam or water passages, and gears shall be sprayed with MIL-C-18382 Type P-14 preservative. When applicable, spraying shall be accomplished while slowly actuating pump. Top or end casing of two stage or larger pumps, with horizontally or vertically split casings, shall be removed and coated with Type P-14 preservative. Pump shall be allowed to stand with drain plug removed until preservative flow ceases. Plug shall be coated with the Type P-14 preservative and reinstalled. Other openings leading to interior pump shall be closed with threaded cap, plugs, or tape conforming to Specification SAE-AMS-T-22085 level B, MIL-T-22085, level A. Preservative oil, P-10, Type I, Grade 30, may be used to process interior surfaces of water pumps where potability is not a consideration. **NOTE** The water-foam systems of fire, crash and rescue trucks must be thoroughly flushed with water at all levels of storage (NMCS, etc.), in accordance with directives and/or the procedures specified in applicable operation and service handbooks. If inspections show this had not been accomplished, this action will be accomplished immediately.
93	Racks	A	AV	Where the racks do not increase the shipment cube or present an obstacle to slinging where overseas shipment is anticipated they may be left in the installed position. If removed, they will be strapped together and secured in the cargo compartment of the vehicle.

Table 8-2. Processing Procedures - Continued

COLUMN I Item	COLUMN II Component	COLUMN III Level	COLUMN IV Type of Vehicle	COLUMN V Processing Required
93-Continued		B	AV	No processing required.
94	Radiators	A, B	AV	See Item 40, Cooling Systems.
95	Registers, Fuel	A, B	ST SE	a. No processing required on sealed type registers. b. Remove, clean and coat operating mechanism with Type P-9 preservative oil. Reinstall in original position on the vehicle and seal any openings with moisture proof pressure sensitive tape conforming to Specification SAE-AMS-T-22085, for level B and, MIL-T-22085, for level A.
96	Rod, Piston	A, B	MH	Coat machined surfaces of piston rod with Ford Truck SE P-10, Type I, Grade 30 preservative oil. Disconnect return oil line at hose connection and raise hoist to full height. Insert cylinder oil return line in container filled with two quarts of oil from reservoir. Lower hoist as in normal operation until oil is drawn into cylinder. Raise hoist, stopping elevation when oil starts to flow from the return line opening. Fog interior with P-10, Type I, Grade 30 preservative oil through the return line opening while lowering the hoist to bottom position. Connect return line. Coat top of piston rod with grease conforming to Specification MIL-G-10924 and wrap with water-proof, grease-proof, barrier material conforming to Specification MIL-B-121 sealed with pressure sensitive tape conforming to Specification SAE-AMS-T-22085, for level B and, MIL-T-22085, for level A. Where climatic conditions require further protection, cover this wrap with a waterproof shroud fabricated from material conforming to Specification PPP-B-1055.
97	Seats, Seat Backs, and Cushions	A, B	AV	See Items 11, 14 and 29.
98	Screens, Line	A	SE	a. Remove, clean, coat with P-10 preservative oil, and replace. b. Screens handling drinking water will be processed as above using Type P-14 preservative.
		B	SE	No processing required.
99	Segregators	A	SE	a. Coat all internal surfaces with P-10, Type I, Grade 10 preservative oil and reassemble. Secure cover with sufficient bolts uniformly spaced and tightened. Bolts not used shall be coated with the preservative, wrapped in greaseproof barrier, Specification MIL-B-121, placed in a cloth bag, and fastened to the segregator.

Table 8-2. Processing Procedures - Continued

COLUMN I Item	COLUMN II Component	COLUMN III Level	COLUMN IV Type of Vehicle	COLUMN V Processing Required
99-Continued				b. Shipment. Place a suitable soft wood block beneath segregator floats to relieve weight of float assembly on needle valve. A warning tag bearing the information "REMOVE SOFT WOOD BLOCKS IN SEGREGATOR PRIOR TO PLACING IN SERVICE", will be securely attached to the segregator.
		B	SE	No processing required, except that for shipment, segregator floats will be blocked specified as above.
100	Sheaves	A, B	SE	Lubricate sheave bearings with grease, automotive and artillery, conforming to Specification MIL-G-10924. Coat sheave cable track with Type P-1 preservative.
101	Soft Tops			See Item 29.
102	Splines	A, B	AV	Coat exposed machined surfaces of splines with Type P-1 preservative.
103	Springs	A, B	AV	a. When nesting, stacking, or when individual vehicle design results in excessive weight being placed on the springs of vehicles in storage, a suitable block shall be placed between the axle and frame to eliminate this stress. b. Shipment. Applicable loading rules or special instructions may require blocking of springs as above to dampen vertical vibration and shock in transit. Check with LRS Distribution Flight personnel when special guidance is required.
104	Sprockets	A, B	AV	Coat exposed unpainted sprockets with Type P-1 preservative.
105	Starter Drive	A	AV	When there is evidence of rust or corrosion, clean and coat with a thin film of primer conforming to Specification TT-P-664. **CAUTION** Do not mix various hydraulic fluids.
106	Steering Systems, Hydraulic	A	AV	Fill hydraulic reservoir with the prescribed operation lubricant.
		B		No processing required.
107	Straps, Leather	A	AV	Coat with Neat's foot Oil, Specification C-N-200 or leather dressing, mildew preventive, Specification O-L-164.
		B	AV	No processing required.

Table 8-2. Processing Procedures - Continued

COLUMN I Item	COLUMN II Component	COLUMN III Level	COLUMN IV Type of Vehicle	COLUMN V Processing Required
108	Systems, Electrical	A	AV	These systems are normally resistant to corrosion, therefore the procedures below are suggested and are to be implemented at the discretion of the responsible storage officer as required by local climatic conditions, length of storage, and type of storage afforded. a. When equipped with lubricating points, lubricate generator, starter, distributor or magneto with a few drops of P-10, Type I, Grade 30 preservative oil. Remove cover and rotor from the distributor or magneto. Wipe interior with a clean soft cloth saturated with petrolatum, Specification VV-P-236A avoiding contact points. b. Where there is evidence of corrosion in starters or generators; disassemble, clean, and coat interior of housing with insulating varnish. Specification MIL-V-13811D avoiding current-carrying contact areas. c. Tape all openings with MIL-T-22085 tape and spray assembly with the varnish prescribed above. d. Electric Material Handling Equipment. Coat all exposed contact points with MIL-L-3150 (P-7) preservative oil or MIL-PRF-81309F. Spray panels and wiring with insulating varnish, MIL-V-13811D taking care to avoid coating contact surfaces. Tape opening around cover on the controller box using moisture-proof tape, Specification MIL-T-22085. Cover exposed ends of electrical cable or harnesses, plug openings, sockets, terminals, circuit breaker, junction boxes, etc., with the tape specified above. Spray all wiring with insulating varnish, Specification MIL-V-13811D. **NOTE** MIL-V-1137 may be substituted for MIL-V-13811D in applications suggested above.
		B	AV	No processing required.
109	Systems-Heating and Pumping (Asphalt)	A	SE	a. Thoroughly clean bitumen from pumping system. Disconnect suction and discharge hoses at pump and fill pump and adjacent piping with P-10, Type I, Grade 30 preservative. Rotate pump and thoroughly coat internal parts with oil. Drain and seal all openings with tape. Specification MIL-T-22085.

Table 8-2. Processing Procedures - Continued

COLUMN I Item	COLUMN II Component	COLUMN III Level	COLUMN IV Type of Vehicle	COLUMN V Processing Required
109-Continued				b. Drain and assure that the boiler and tubes are thoroughly dry. Fill boiler system with preservative oil, P-10, Type I, Grade 30, drain oil into clean container for re-use. Store with drain plug removed. Allow a vent in the top of the system to remain open. Protect the vent to allow only air circulation. Attach caution tag to unit. The following information will be stamped or typed thereon: **CAUTION** This system treated with oil Specification MIL-L-21260, Type I, Grade 30. Before equipment is placed in service, flush the boiler system with live steam until all oil is removed.
		B	SE	No processing required.
110	Systems, Refrigeration	A, B	SE	Pump down the refrigeration system prior to storage or shipment by removing protective plug from the pressure Gauge port, and attaching a suction Gauge (range 30 inches mercury vacuum to 100 psi pressure). Close the receiver outlet service valves tightly, and operate the tank pressure switch so that the compressor will run and pump the refrigerant from the suction side to the receiver. When the suction pressure is at 10 inches vacuum, switch off the compressor switch. If pressure rise is above 4 psi, repeat the operation. Then close discharge valve, bleed pressure on high side of compressor to 0 psi. If pressure rise is indicated, repeat bleeding on high side of compressor until 0 psi reading is indicated. Adequately tag the refrigeration system to indicate pumped down condition. See Items 10 and 13.
111	Tanks			See Items 10 and 13.
112	Tarpaulins	A, B	AV	Except when otherwise specified, tarpaulins and other loose canvas items shall be thoroughly dried, folded or rolled in a manner to avoid creasing of plastic windows, packaged in accordance with method IC-5 of Specification MIL-P-116, and packed in a nailed wood box conforming to Specification PPP-B-621. Box shall be identified and stowed in a protected location on the vehicle.
113	Tires	A	AV	Unless otherwise specified, no preservatives or (Mounted) preservative coatings shall be applied to tires,

Table 8-2. Processing Procedures - Continued

COLUMN I Item	COLUMN II Component	COLUMN III Level	COLUMN IV Type of Vehicle	COLUMN V Processing Required
113-Continued				a. Shipment. Road tires mounted shall be inflated to 10 pounds above the pressure recommended for maximum load. Spare tires shall be inflated to 2/3 of the pressure recommended for maximum load, levels A & B. b. Storage. Pressure in all tires of vehicles blocked clear of ground reduced to approximately 25% of the normal operating pressure. c. Enclose the tires and wheel assemblies in black polyethylene material, NSN 8135-00-579-6487. Secure with twine or pressure sensitive tape. Punch holes through bottom of the enclosure to permit drainage of condensation. a. Maintain prescribed operating pressure. b. Shipment. Inflate to 10 pounds above operating pressure. Tires destined for long-term storage may be preserved with preservative conforming to MIL-P-11520 if determined cost effective.
114	Tools			See Item 83 OVE.
115	Tracks	A	SE	Coat metal components of rubber tracks and the entire surface of metal tracks with Type P-1 preservative. Dunnage shall be placed beneath tracks of stored crawler vehicles to provide adequate drainage.
		B	SE	No processing required.
116	Trailers, Inverted			See Item 69.
117	Transfer Case Assemblies			See Item 46, Differentials.
118	Transmissions	A	AV	a. Standard Drive. Transmission shall contain applicable grade of lubricant conforming to Specification MIL-L-2105, filled to operating level; and shall be operated through all ranges for a minimum of minute at a sufficient engine speed to assure lubricant coverage of all interior parts and surfaces. b. Automatic Drive:

Table 8-2. Processing Procedures - Continued

COLUMN I Item	COLUMN II Component	COLUMN III Level	COLUMN IV Type of Vehicle	COLUMN V Processing Required
118-Continued				(1) Long term storage. Transmission shall contain P-10 preservative oil, Type I, Grade 10 or 30, as applicable, filled to operating level; and shall be operated as specified above. Transmissions preserved with P-10 preservative oil that do not operate on lubricating oil conforming to Specification MIL-L-2104 shall have a warning tag, bearing the information, Vehicle "TRANSMISSION FILLED WITH P-10 PRESERVATIVE OIL DO NOT DRIVE VEHICLE MORE THAN 10 MILES BEFORE DRAINING AND REFILLING WITH PRESCRIBED OPERATIONAL LUBRICANT", securely attached to the shift selector. (2) Shipment. Transmission shall be filled to operating level with prescribed operational lubricant and operated as specified under a, above.
		B	AV	a. Standard Drive. As specified for Level A, above. b. Automatic Drive. Transmission shall contain lubricant conforming to requirements of applicable drawing, specification, or lubrication order, filled to operating level. When transmission contains P-10 preservative oil, Type I, Grade 10 or 30, as applicable, operating level shall be attained by addition of the same grade oil. Transmission shall be operated through all ranges for a minimum of one minute at a sufficient engine speed to assure lubricant coverage of all interior parts and surfaces.
119	Universal Joints	A, B	AV	Coat exposed machined surfaces with Type P-1 preservative.

Table 8-2. Processing Procedures - Continued

COLUMN I Item	COLUMN II Component	COLUMN III Level	COLUMN IV Type of Vehicle	COLUMN V Processing Required
120	Winch and other Gear Driven Assemblies	A, B	SE	Winch gear case and other gear driven units and Derrick Assemblies shall contain gear lubricant conforming to requirements of applicable lubrication order, filled to operating level. Wire cable shall be unreeled and all surfaces shall be coated with Type P-1 preservative. While cable is being Rewound, any damage to applied preservative coating shall be remedied by application of additional Type P-1 preservative to damaged areas. All exposed, unpainted metal surfaces of cable drums, sheaves, snatch blocks, boom block, A-frame, crane, or derrick boom, controls, and linkage shall be coated with Type P-1 preservative. All moving mating parts shall be coated with grease conforming to Specification MIL-G-10924. Hydraulic system shall contain operational hydraulic fluid, filled to operating level. When operating surfaces of hydraulic piston are exposed, piston shall be coated with grease conforming to Specification MIL-G-10924, and over-wrapped with barrier material conforming to Type II, grade A, Class 2 of Specification MIL-B-121, secured with tape conforming to Specification SAE-AMS-T-22085, for level B and, MIL-T-22085, for level A. When hydraulic piston is retracted, exposed surfaces of piston shall be coated with Type P-1 preservative. Hydraulic controls shall be secured in neutral position. Wire rope chains shall be coated with preservative lubricant conforming to VV-L-751 Specification.
121	Windows	A, B	AV	See applicable provisions under Items 11, 28, and 29.
122	Windshields	A, B	AV	No processing required unless otherwise specified.
123	Windshield Wiper	A, B	AV	See applicable provisions under Items 11, 28, and 29.

8.8 PRELIMINARY ACTIONS.

8.8.1 Administrative. Ensure that proper inspections have been performed and that any unit involved in carrier claims or manufacturer's warranty action has been cleared for processing, Check that reporting actions have been taken as indicated. For example, Report of Damaged or Improper Shipment, Report of Survey, or Unsatisfactory Report. Check status of maintenance actions such as repair, painting, or accomplishment of time compliance technical orders.

8.8.2 Scope. Inspection operations incident to storage and shipment include both maintenance inspections and inspection of the status of preservation and processing. Inspection personnel must be familiar with the inspection system set forth in AFI 23-302, Vehicle Management, and Chapter 3 covering maintenance inspection and recording thereof as well as with the requirements of this technical order. Chapter 3 specifically excludes vehicles in storage from the operational inspection intervals prescribed therein, therefore, maintenance inspection intervals as well as storage inspec-

tion intervals are prescribed below. For purposes of practicality and economy, both inspections shall be scheduled concurrently when possible.

8.8.3 Responsibility. Earlier portions of this technical order establish responsibility for processing. Responsibility for conduct of inspection will be delegated to vehicle management activity. Management will ensure that qualified inspectors are available to accomplish required inspections and report discrepancies noted.

8.9 PRE-STORAGE PREPARATIONS.

8.9.1 Cleaning. Remove all debris from cabs, crew compartments, bodies, tool compartments, equipment storage areas, and other places as required. Remove rust and scale from corroded areas. Remove or cover any item subject to damage during washing. Wash vehicle thoroughly and remove stones from tires, wheels, tracks, or suspension. When steam cleaning is necessary, ensure that equipment subject to damage is removed or adequately shielded and that personnel are instructed never to direct cleaning jets at critical areas. Drain thoroughly and dry. Ensure that drain holes in body and compartment areas are open.

8.9.2 Painting. After cleaning, removal of rust, and drying of surfaces requiring painting; use passivator, filters, sealers, primers, and repaint as required. (Refer to Chapter 2, Painting and Marking of USAF Vehicles.) Spot painting will be accomplished in lieu of complete repainting when ever practical.

8.9.3 General Processing. A general application technical order of this type cannot provide specific guidance for every item. When the detailed requirements do not provide guidance, refer to Specification MIL-STD-2073-1D “Methods of Preservatives. Application Criteria and Preservation Methods”. References below to P Type preservatives are to those of Specification MIL-STD-2073-1D.

8.9.3.1 Exposed Machined Surfaces. Unless otherwise specified, coat with Grade I (P-1) or Grade II (P-2) Preservative and wrap with waterproofed, grease proofed, barrier material conforming to Specification PRF-121G, grade c, secured with pressure sensitive tape.

8.9.3.2 Unpainted Non-critical Exterior Metal Surfaces. Unless otherwise specified, coat with Grade I (P-1) preservative. This is a cold application, hard film preservative and should not be applied in any instance where removal prior to use is required.

8.9.4 Disassembly. Items subject to damage and pilferage shall be removed and packaged and stored as specified for OVE (see item 83). For shipment: Remove parts as required to effect desired reduction in shipping cube. The packed parts shall be placed in a protected location on the vehicle and secured in a manner to prevent movement and damage during shipment and storage. Removed bolts and nuts, screws, pins, and washers shall be placed in one of the mating parts and secured to prevent their loss.

8.9.5 Matchmarking. Parts removed shall be matchmarked when necessary to facilitate reassembly. Match marking information shall be on cloth shipping tags or on metal tags. Cloth tags shall be waterproof in accordance with standard MIL-STD-129P(3).

8.9.6 Historical Records. Historical records shall be maintained current and complete; packaged in an envelope conforming to Type II, Class b, of Specification MIL-DTL-117H, and placed in dash compartment, lubrication order holder, or securely attached in a conspicuous location near the identification or data plate.

8.9.7 Marking. In addition to specified special marking, vehicles shall be marked in accordance with the applicable requirements of Standard MIL-STD-129P(3).

8.10 PRE-STORAGE ACTIONS.

Storage and preservation of vehicles temporarily removed from service due to Non-Mission Capable Supplies (NMCS), awaiting repair/disposition, etc., will be the responsibility of the vehicle fleet manager (VFM). A general condition inspection, with particular emphasis on security and preservation, shall be accomplished when vehicle is placed in storage and again at least once each 90 days thereafter. Parts will not be stored on soft (easily marred) trim or upholstery, Tires will be kept inflated. Battery cables shall only be disconnected on those vehicles on NMCS status for electrical problems and where a possibility exists for electrical shorts or excessive battery voltage drop/current drainage. Batteries shall be removed from vehicles on NMCS status which are subject to climatic extremes or subfreezing temperatures which are projected to exceed 72 hours duration. Batteries shall be stored under protective cover in normal room ambient temperature and kept on trickle charge. All other vehicles not on NMCS status shall receive, upon receipt and prior to processing, a complete serviceability inspection of the entire vehicle and its mounted equipment. Use AFTO Form 91, Limited Technical Inspection-Motor

Vehicles, to ensure all On-Vehicle Equipment (OVE) is in accordance with standards. Maintain proper storage status on each vehicle.

NOTE

Status may be maintained on status lists, boards or placement of a locally fabricated placard on vehicle with the following minimum information: Vehicle registration number, NMCS/Disposition date, work order number, major component part required, reason for storage, date of last inspection. Tagged batteries removed from vehicle shall be stored in normal room temperature ambient under protective cover, and left on trickle in battery shop if quantities to be stored do not exceed room capabilities.

8.11 MAINTENANCE.

Except for intervals of inspection which shall be as detailed below, and unless otherwise specified, the requirements of AFI 23-302, and Chapter 1 of this TO will apply. Conduct of inspection, minimum serviceability standards, forms and posting of vehicle records shall be as prescribed by those requirements:

8.11.1 During Storage.

8.11.1.1 A major inspection shall be accomplished every 12 months and inspection forms revised accordingly.

8.11.1.2 Whenever storage inspection reveals damage through a failure in preservation (or any other cause) a serviceability inspection shall be performed using AFTO Form 91. Vehicles previously listed as serviceable will be scheduled into the vehicle management activity for repair, and return to a serviceable condition.

8.11.1.3 When these reports indicate a possibility of general failure of a specific preservation application or a processing deficiency common to a certain type of vehicle the responsible VFM shall direct inspection of a representative sample of like equipment in storage, and initiate further inspections as indicated by the results of such sampling to ensure that the equipment in storage is serviceable.

8.11.2 Outshipment. Immediately prior to shipment, a serviceability inspection for condition and completeness in accordance with Chapter 1, shall be performed to ensure that the vehicle and all accessories, attachments, mounted equipment, and OVE are serviceable and complete.

8.12 STORAGE (STATUS OF PRESERVATION AND PROCESSING) INSPECTIONS FOR VEHICLES PRESERVED FOR LEVEL A.

8.12.1 Visual Inspection. Vehicles and their attachments and OVE shall be given a visual inspection each 90 day storage period or more frequently contingent upon climatic conditions and determination by the vehicle fleet manager. The inspections shall be recorded on general purpose data sheet, AF Form 3126 or equivalent. This inspection shall be visual and normally requires no removal of preservation or component disassembly beyond removal of cover and access plates, hatches, etc. This inspection shall include the following:

8.12.1.1 Condition of painted surfaces.

8.12.1.2 Effectiveness of preservation applied to external surfaces.

8.12.1.3 Check of air pressure in tires. Where quantity of vehicles in storage justifies, the VFM may perform this check on a sampling basis.

8.12.1.4 Leakage of lubricants or preservative oils from assemblies such as power train components, pumps, tanks, etc.

8.12.1.5 Leakage of cooling system or evidence of deterioration of coolant lines and hoses.

8.12.1.6 Deterioration of packing on OVE or accessories.

8.12.1.7 Completeness of accessories, attachments, and OVE.

8.12.1.8 Accumulation of water in body areas (including interior of door panels).

8.12.1.9 Condition of shrouds, tarpaulins, canvas covers, and other protective coverings.

8.12.1.10 Any visual indication of defect or deterioration affecting unit serviceability shall be noted and reported to the responsible storage officer.

8.12.2 Functional Inspection. Every 180 days, or more frequently as determined by the VFM, and concurrent with alternate inspections conducted in accordance with the preceding paragraph, each vehicle shall be exercised in place to effect distribution of lubricants and preservatives using vehicle's own power system or an external power source as necessary. Suggested procedures follow:

8.12.2.1 Be sure clutch is disengaged.

8.12.2.2 Place shifting lever in high gear.

8.12.2.3 Engage transfer case, if so equipped.

8.12.2.4 Lock one rear wheel. Rotate other wheel in forward direction at sufficient speed to ensure that portion of gears above oil level are thoroughly lubricated. For vehicles with front wheel drive, limited slip, and traction differentials, rotate both drive wheels simultaneously.

8.12.2.5 Inspect vehicles equipped with steering clutches for evidence of water and corrosion. If evident, operate vehicle to ensure free movement of clutches and reprocess as required.

8.12.2.6 Perform any preservation required as a result of operation. While vehicle power train assemblies are being exercised, check for grinding or other unusual noise and/or evidence of binding.

8.12.3 Complete Storage Inspection. Vehicles in Level A storage shall be given complete storage inspections as follows:

8.12.3.1 Inspect at rate of percent of total stored (except that at least one unit shall be inspected from each group of like vehicles) each 180 day period, to determine if the preservation and processing measures applied are effectively preventing corrosion and deterioration.

8.12.3.2 Where quantities permit, no vehicle shall be selected for inspection which has been operated subsequent to the last processing, and samples shall be selected at random to avoid repeated inspection of the same unit vehicle.

8.12.3.3 If this inspection reveals defects in preservation, an additional 10 percent shall be inspected and a report of conditions with recommendations for corrective action submitted to the responsible storage officer.

8.12.3.4 To enable detailed observation, assemblies shall be depreserved and disassembled sufficiently to permit assurance that no corrosion or deterioration has occurred. Visual inspection will be sufficient in depth and scope to reduce the requirement for extensive disassembly.

8.12.4 Storage Site. A requirement may exist for vehicles to be maintained in either inside or outside storage. At no time will vehicles be stored so as to permit contact between tires and a surface soaked with oil or grease. Vehicles stored on a surface which is not level will have the wheels or tracks securely chocked to prevent movement.

8.12.5 Outside Storage. For outside storage, the most suitable hard standing or natural ground surface will be selected. When natural surface is selected, it shall have good drainage, and must maintain its texture under normal climatic conditions so as to be free from soft spots. To eliminate fire hazards during dry weather, care will be taken to prevent accumulation of grass and weeds in the storage site and the areas immediately surrounding it. Vehicles shall be stored with one end slightly elevated so that the maximum amount of accumulated water will drain from the hull or body. Storage under trees will be avoided.

8.12.6 Inside Storage. Inside storage will be used wherever available. Fork lift trucks, fire trucks, and vehicles containing electronic equipment or other types of equipment as determined by the commander or VFM concerned, will be stored inside buildings or provided equal protection from weather conditions.

8.12.7 Spacing and Arrangement. Vehicles will be spaced so as to permit ready access for inspection and servicing during storage. Fire lanes will be provided at appropriate intervals. Vehicles will be arranged by types and positioned to facilitate removal in accordance with prevailing issue policy. Normally, vehicles which were received first will be the first ones shipped. General guidance on storage is contained in AFMAN 23-110, USAF Supply Manual.

8.12.8 Nesting or Stacking for Storage. Small type vehicles such as compact pickups may be placed inside larger type vehicle bodies where sufficient space is adequate for performing the maintenance services required during storage period. Where vehicles are stored in stacks, arrangement should make it possible to remove a vehicle from the stack without disturbing more than one other stack.

8.12.9 Blocking and Fire Precautions. Vehicles shall be blocked off the ground using blocks suitable to support the weight of the vehicle(s) so that rubber tires are off the ground. When nesting, stacking, or loading, if individual vehicle design results in excessive weight being placed on the springs, a suitable block shall be placed between the axle and frame to eliminate this stress. Track laying vehicles shall be stored on long dunnage.

8.12.10 Security and Fire Precautions. Adequate security measures will be effected to prevent theft and pilferage. Fire prevention equipment and procedures at Air Force activities are responsibilities of the Installations Engineering Office in accordance with AFI 32-2001, The Fire Protection Operations and Fire Prevention Program. Storage personnel will ensure that changes in storage areas are immediately reported so that proper precautions can be implemented. Commercial contractors operating storage areas will effect fire and damage control procedures as required by the Contracting Officer or his authorized representative and in accordance with applicable state, county, or municipal regulation.

8.12.11 Insect and Rodent Control. Insect and rodent control are the responsibilities of the Installations Engineering Office.

8.13 LOADING.

8.13.1 Rail Shipment. Loading of vehicles on open-top cars for shipment by rail shall be in accordance with the applicable requirements of the rules issued by the Association of American Railroads.

8.13.2 Highway Shipment. Loading of vehicles for shipment by highway and rules for shipment by haul-away, drive-away or tow-away, shall be in accordance with U. S.

Department of Transportation Federal Highway Administration, Motor Carrier Safety Regulations and applicable Military Regulations.

8.13.3 Guidance in particular cases may be obtained from local LRS Vehicle Management Flight.

8.14 GENERAL DEPROCESSING.

8.14.1 Introduction. This provides minimum procedures to maintain Air Force vehicles in operating condition, ready for immediate use with minimum deprocessing, during storage for indefinite periods. These procedures will be implemented only when the requirement for immediate operational readiness will not permit the delays incident to standard processing and deprocessing for storage and shipment. Authority to implement must be obtained from 580 CBSS/GBL. When this technical order is specified contractually, use of these procedures is not authorized unless special provision implementing this section is effected.

8.14.2 Scope. These procedures are minimum measures. It is realized that such general application instructions will not provide coverage for all vehicles under the diverse climatic conditions encountered worldwide. Therefore, local commanders or their authorized responsible officers are expected to implement further essential protective measures as required. When these procedures are specified contractually, the implementation of such additional protective measures shall be effected only with the approval of the contracting officer or his authorized representative.

8.15 STORAGE AREA.

The earlier requirements stated in this chapter are applicable, except that vehicles shall not be stored in stacks or blocked up. Since operationally ready vehicles are especially subject to theft and pilferage, special attention to security measures is essential. Containers of foam and fire crash trucks loaded with foam should not suffer prolonged exposure to temperatures lower than 32 °F. Vehicles operationally exercised during freezing weather must use the vehicle's winterization equipment. If space permits, fuel servicing vehicles shall be spaced so that the bimonthly fuel cycling exercise specified can be safely conducted without requiring moving of the vehicle. If such space is not available these vehicles must be removed to a sufficiently isolated area for this operation. Adequate fire protection shall be provided during this processing.

8.16 USE OF STORED VEHICLES.

Vehicles being stored under these procedures may be used to supplement the storage facility complement of vehicles, provided that such use is compatible with the readiness requirement. Use must be sufficient to meet the periodic exercise requirement, and vehicles so used shall be rotated with like models in storage so that such usage is maintained at a minimum. If use does not include exercise of mounted accessories and auxiliary equipment, the requirement for periodic exercise of these components shall be accomplished. When this document is used contractually, permission to use stored equipment must be obtained from the contracting officer or his authorized representative.

8.17 OPERATING PERSONNEL.

Drivers and operators assigned to exercise equipment must be adequately skilled and experienced. No operator shall be assigned to exercise any item of special purpose equipment who is not familiar with that particular vehicle and its accessories. When this document is specified contractually, the contractor shall furnish a certificate of competency for each driver and operator including a listing of the equipment covered by this certificate.

8.18 TCTOS.

Accomplishment of time compliance technical orders (TCTOs) is required. TCTO action shall be posted to vehicle records. Vehicles in long term storage in flexible storage containers will have TCTOs installed during next major inspection.

8.19 REPAIR.

Vehicles requiring repair will be immediately reported to the responsible VFM for corrective action. When this document is specified contractually, the authority to repair and the extent of repair to be contractually accomplished, if any, shall be as specified by the procuring agency. This document shall not be interpreted as authorizing repair by the contractor. Notify 580 CBSS/GBL if any unusual problems are encountered or vehicles are unserviceable for an extended period of time.

8.20 INSPECTION.

8.20.1 Receiving. Each vehicle received shall be inspected for serviceability in accordance with Chapter 1. This inspection shall include accomplishment of a listing of depreservation actions required to place the equipment in operational ready status. Those parts of the serviceability inspection which require equipment operation may be conducted at the time of initial exercise. The depreservation check list shall indicate whether the vehicle is equipped with a wet battery or with a dry battery and electrolyte. It shall also include information as to the status of preservation of On Vehicle Equipment (OVE) for storage. The responsible VFM will ensure that proper discrepancy reports are prepared on vehicles received in incomplete or damaged condition. When receiving inspection indicates that carrier liability and claim action may be involved, the damaged unit should be held as is, if practical, pending notification to the carrier and corrective action under applicable regulations.

8.20.2 During Storage. Operators shall report defects detected during exercise to storage facility inspectors to ensure proper condition tagging of units found other than serviceable. A serviceability inspection shall be accomplished on each unit 180 days from the date of receiving inspection and every 180 days thereafter, except that this inspection shall be adjusted to coincide with the next scheduled exercise programmed after its due date.

8.20.3 Shipping. As the vehicles are maintained in serviceable status and immediate availability for delivery is mandatory, shipping inspection requirements shall be held to a minimum. The following inspections are required:

8.20.3.1 Ensure that vehicle is complete and serviced, that OVE, records, publications, batteries, etc., are with the unit.

8.20.3.2 Check to ensure that the shipment complies with applicable traffic and carrier tariff regulations.

8.20.3.3 If vehicles are to be offered for military airlift, ensure that the requirements of AFMAN 24-204(I) are met, including necessary certification.

8.20.3.4 Check shipping documents

8.20.4 Other Inspections. Additional inspection actions shall be initiated as required by the responsible storage officer. A routine daily inspection to visually check tire inflation, accumulation of water in vehicle bodies, evidence of pilferage or theft, unusual leakage, and other easily observable defects is required. Special surveillance tours shall be made immediately following such severe climatic conditions as hail, lashing rain, heavy snow, etc.

8.21 DETAILED PROCEDURES.

8.21.1 Preparation for Storage.

8.21.1.1 Cleaning. Following initial receiving inspection and removal of any processing materials such as tape, strippable coatings, and other preservatives, the vehicle shall be thoroughly washed. Subsequent cleaning shall be accomplished only as necessary in support of inspection and exercise operations. Care shall be taken to prevent damaging of critical components (such as electrical units, control panels, and similar items).

NOTE

If storage is located in areas where a highly saline atmosphere exists, a periodic fresh water wash down of all equipment is recommended. If paint on the vehicle shows excessive oxidation, wax per P-W-120 should be applied at discretion of the VFM.

8.21.1.2 Depreservation. Any depreservation required to place the vehicle in operational status shall be accomplished, OVE not essential to operational readiness may be stored in processed condition. If OVE is removed for inside storage, the equipment for each vehicle shall be segregated and adequately identified to expedite reloading upon call. The vehicle shall be tagged to require replacement of OVE prior to shipment.

8.21.1.3 Assemblies such as crankcase, differentials, gearcases, and transmissions shall, as required, be drained, flushed and filled to operating level with the prescribed lubricant.

8.21.1.4 Cooling systems shall be checked to ensure that they are filled to operating level with the coolant required. Antifreeze shall be checked for strength with a hydrometer or refractometer for extended life coolants. When inspection reveals that coolant is unserviceable, the system shall be drained, flushed, and refilled.

8.21.1.5 Necessary lubrication shall be performed in accordance with Chapter 3 or the manufacturer's lubrication guide. (Manufacturer's guide takes precedence.)

8.21.1.6 Batteries. Wet batteries received with vehicles may be used until completion of first exercise. They shall then be moved to a battery room and maintained in a charged condition until shipped or until a dry battery replacement is obtained. Wet batteries being maintained may be used for exercise where such use does not compromise the operational ready requirements. Batteries received charged and dry may be stored in the vehicle battery carrier; however, it is recommended that inside storage be provided. Vent holes in the filler caps of dry batteries shall be plugged or sealed until the battery is activated for vehicle outshipment. Cable terminals shall be coated with grease conforming of Specification MIL-PRF-10924B and secured to the vehicle with tape conforming to Specification SAE-AMS-T-2208. The responsible storage officer shall see that sufficient electrolyte is on hand to activate all dry batteries. No dry battery shall be activated until a check has been made to ascertain if a serviceable wet battery is available. Every effort will be made to reduce battery room operations to a minimum.

8.21.1.7 Fuel Tanks. The vehicle's fuel tank shall be filled in accordance with AFMAN 24-204(I).

NOTE

- Depending on mode of shipment, fuel tanks may require draining and purging prior to shipment in accordance with AFMAN 24-204(I) and Paragraph 8.22 of this manual.
- If lengthy storage results, gasoline fuel systems may show evidence of gumming. In this event the following alternative procedure is authorized. The fuel tanks shall be drained and coated with preservative conforming to Specification MIL-PRF-21260E. The fuel line shall be disconnected on the tank side of the fuel pump. Exercising or operation will be conducted using a portable fuel supply.

8.21.1.8 Special Precautions. Personnel assigned to depreservation shall be furnished specific instructions regarding such special purpose vehicles as liquid oxygen, gaseous cryogenic tube tank trailers, and related equipment. Many of these units are pressurized with nitrogen; contain components which have been preserved under special cleanliness criteria that must be maintained until actual use; may contain dangerous materials; or are insulated by the drawing of vacuums on annular spaces. No depreservation shall be accomplished or controls moved except by properly trained personnel. The exercise method is not applicable to such units.

8.21.1.9 In areas where freezing weather is expected, special attention to adequate sealing around windshields is recommended to prevent damage from ice accumulation.

8.21.2 Exercise Intervals. Unless otherwise specified, each vehicle shall be exercised immediately after initial receiving operations and once every 30 days thereafter.

8.21.3 Exceptions.

8.21.3.1 The pumping system of fuel servicing trucks and semi-trailers shall be operated every 30 days to ensure that seals and gaskets of pumps and couplings do not deteriorate. A sufficient quantity of fuel shall be maintained in the tanks to permit a cycling operation (pumping from and return to the tank). Care shall be exercised that pumps are not run dry. A check of the differential pressure shall be made every 30 days. If the difference between inlet and outlet pressure exceeds 15 psi, the filters require replacement. Fuel used in cycling operations shall be replaced every 12 months or upon evidence of breakdown.

CAUTION

Cycling operations require the utmost caution on the part of all personnel. Gasoline and most other fuels are extremely flammable and easily ignited. Fuel vapors can be lighted by static or friction sparks, hot exhaust pipes, lighted cigarettes, electrical devices and similar ignition sources. Fire guard personnel must be maintained during cycling operation to watch for fires, fuel leaks, and any other emergency which could warrant discontinuing operations. Refuelers will be grounded to an approved ground as per TO 00-25-172. Personnel must be thoroughly familiar with the operating procedures and safety precautions outlined in the operation technical manual for the specific refueler to be exercised.

8.21.3.2 When storage experience or special conditions require more frequent exercising, the local commander or VFM is authorized to vary the exercise interval to ensure adequate protection. When this document is specified contractually, permission to increase frequency must be obtained from the contracting officer or his authorized representative.

8.21.3.3 Vehicle in long term level A storage shall be exercised bi-yearly as a minimum.

8.21.3.4 Exercise Period. All vehicles shall be operated for one-half hour unless otherwise specified. This time may include the warm-up period. Accessory and mounted equipment shall be operated for a period sufficient to exercise and lubricate all moving parts, but not to exceed one-half hour. Vehicles will be driven a minimum of ten minutes during this interval.

8.21.3.5 Requirements Prior to Exercise.

8.21.3.5.1 Check for evidence of leakage of oil fuel or coolant. Ensure that engine and power train component lubricant levels are proper.

8.21.3.5.2 Check tire inflation. Tires shall be inflated to five pounds in excess of specified operating pressures.

8.21.3.5.3 Remove temporary protective exhaust stack covers.

8.21.3.5.4 Install canvas covers to protect exposed equipment or items stored in open areas, such as vehicle beds.

8.21.3.5.5 Install standby batteries. Check battery water level if battery received with vehicle is being used for initial exercise.

8.21.3.5.6 Check lights, reflectors, wipers and horns.

8.21.3.6 Conduct of Exercise. Start vehicle and run until normal operating temperature has been reached. Operate vehicle in all gear ratios, except that crawler mounted cranes need only be driven forward and backward for one complete revolution of the tracks. Operate auxiliary mounted equipment and accessories exercising all controls at least one time. An adequate truck-tractor or towing unit shall be provided for semi-trailers and towed equipment. The mover shall be equipped to permit testing of trailer lights, brakes, and other equipment requiring a power source.

8.21.3.7 Check During Exercise. Checks during exercising will ensure that:

8.21.3.7.1 Engines operate without abnormal noise, vibration, overheating or other evidence of malfunction.

8.21.3.7.2 Brakes function properly. Upon completion of exercise, drain air reservoirs of air brake systems.

8.21.3.7.3 Power train components function smoothly without grinding or other unusual noise.

8.21.3.7.4 Steering mechanisms function smoothly with no evidence of binding or shimmy.

8.21.3.7.5 Hydraulic and pneumatic systems function smoothly with no evidence of unusual leakage at seals or tendency to bind.

8.21.3.8 Requirements Prior to Re-Storage.

8.21.3.8.1 The water foam systems of fire, crash and rescue trucks shall be operated. The compressed gas auxiliary systems should be pressure checked and inspected but do not require operations. After delivery of foam, line, hoses, and nozzles must be thoroughly flushed in accordance with the procedures specified in applicable operation and service handbooks.

8.21.3.8.2 Tires shall be marked before vehicle operation to indicate the segment in contact with the ground. When the vehicle is returned to storage after exercise, tires shall be inspected to insure that the vehicle rests on another segment of the tires.

8.21.3.8.3 Visually inspect vehicle for evidence of malfunction such as oil or coolant leaks. Report these and any other defects detected during exercise.

8.21.3.8.4 Refill fuel tanks to capacity. (Except for bodies of fuel servicing vehicles which shall contain only enough fuel for the 15 day exercise.)

8.21.3.8.5 Replace covers on vertical exhaust stacks.

8.21.3.8.6 Lubricate as required.

8.21.3.8.7 Take all possible measures to prevent accumulation of water in vehicle bodies, such as ensuring that drain holes are open; tilting bodies and loosening tailgates; and use of temporary tarpaulins fabricated from waterproofed Kraft wrapping paper conforming to Specification PPP-B-1055 secured with tape conforming to Specification SAE-AMS-T-22085.

8.21.3.9 Records. The records received with each vehicle shall be maintained as required by applicable directives and technical orders. In addition, the vehicle management activity shall initiate records showing the condition status of each vehicle stored, its location and all processing performed. The condition record shall be posted daily to show these units in operationally ready status. This record shall explain the non-operational ready status of vehicles so marked and indicate the target date for return to ready status.

8.22 GENERAL.

8.22.1 Purpose and Scope. The information contained in this section is furnished to familiarize personnel responsible for preparing vehicles for airlift with the administrative and processing problems commonly encountered. It is advisory only and not intended to conflict with or supersede any other regulations, manuals, technical orders, or special instructions. While special instructions on fuel servicing vehicles are included, coverage is general in nature. Requests for assistance on specific problems should be directed to the prime agency responsible for the end item.

8.22.2 Instructions.

8.22.2.1 Commercial Airlift. Vehicles being offered for commercial air shipment must comply with applicable carrier rules and tariffs. In general these are similar to the regulations governing military airlift. Your local Hazardous Materiel Certifier (LRS Distribution Flight) should be able to furnish guidance on specific questions.

8.22.2.2 Military Airlift. Vehicles are usually offered for airlift in drive away condition to facilitate loading operations. All vehicles which are self-propelled or which include internal combustion engines or motors are classified as harzardous materials in AFMAN 24-204(I), Preparing Haz-

ardous Materials for Military Air Shipment. The requirements of this manual must be met and necessary certifications to this effect accomplished (see AFMAN 24-204(I)). Before offering any vehicle for air shipment the following checks must be made:

8.22.2.2.1 Analyze the vehicle and its contents, including all OVE, to ascertain the hazardous cargo included checking against AFMAN 24-204(I), to determine the classification of the hazard.

8.22.2.2.2 Ensure that the requirements of AFMAN 24-204(I) are met, that the shipper's certificates are accomplished and, when applicable, authorizations for operational necessity secured.

8.22.2.2.3 Ensure that OVE and all mounted equipment is adequately secured to prevent shifting during air transit. Harzardous materials are not to be stripped for airlift or included in consolidation containers.

8.22.3 Specific Instructions.

8.22.3.1 Fuel Tanks. Vehicle fuel tanks will contain no more fuel than necessary to meet operational requirements during deployments or to facilitate aircraft loading/unloading operations. Ensure that all transmissions, transfer cases, gear cases, crankcases, hydraulic systems, and cooling systems are securely closed; that drain plugs are tight; and that seals and gaskets are sound. Leakage of flammable liquids from vehicles or engines shipped separately is a matter of continuing concern to air transportation units. When engines or motors (internal combustion) are shipped separately or as a part of other apparatus, the engine and shipping container shall be marked in a clearly visible area with the words, FUEL DRAINED. When vehicles are shipped, boxed or crated, all flammable liquids should be similarly drained and the same marking applied. (Boxed vehicles are prepared for shipment as specified in Standard MIL-STD-3003A.) Vehicles with bio-diesel fuel will have their tank drained, filters changed, and standard diesel added prior to being deployed or transferred overseas.

8.22.3.2 Batteries. Vehicles may be transported by military aircraft with wet battery installed provided that the battery is completely protected against short circuits (remove cables and secure ends' away from the terminals) and secured so that leakage of acid will not occur (see AFMAN 24-204(I)). Wet batteries shipped as part of the OVE should be packed as specified in AFMAN 24-204(I). Dry batteries offer no special hazard and may be installed in the vehicles battery carrier or placed with OVE.

8.22.3.3 Battery Acid (Electrolyte). Electrolyte shall be packed in accordance with AFMAN 24-204(I) and attached to vehicle under hood for air or sea shipment.

8.22.3.4 Air Shipment of Fuel Servicing Trucks, Trailers, and Semitrailers (Except Rocket Fuel and Missile Propellant and Oxidizer Transporting Equipment).

8.22.3.4.1 These procedures are to be performed in addition to requirements specified in preceding paragraphs.

8.22.3.4.2 All operations and processes involving the cleaning, preservation, packaging and packing requirements specified herein should be coordinated with local LRS vehicle management flight, Distribution Flight, medical, and safety personnel, as appropriate, in accordance with AFMAN 24-204(I).

8.22.3.5 Main Fuel Tank. The following procedures are for preparation of fuel tanks for air shipment only.

8.22.3.5.1 To prepare vehicles last designated for carrying combustible products (flashpoint above 100 °F) use the following procedures:

8.22.3.5.2 Static ground vehicle to an approved ground according to TO 00-25-172.

8.22.3.5.3 Have appropriate fire extinguishers available.

8.22.3.5.4 Completely dump and drain each fuel tank/compartment including associated piping, pumps, filters, and segregators. Open all valves to remove fuel from tank pumping system using all available low point drains, tank sump, filter/separator manual drain, pump drain, line strainer and bottom loading manifold.

CAUTION

Ensure all metal drain containers are grounded to fuel tank and common ground point. Connections shall be made to clean unpainted surfaces. Dispose of full containers in accordance with AFMAN 23-110 and TO 42B-1-23.

8.22.3.5.5 Allow the refueling unit to set undisturbed for 24 hours. Redrain all low pints, tank sump, filter/separator manual drain, line strainer and bottom loading manifold.

8.22.3.5.6 No more than 12 gallons of product will remain in the refueling vehicle following the final drain.

8.22.3.5.7 All manual drains not equipped with spring loaded closing devises will be safety wired shut prior to shipment.

8.22.3.5.8 Secure AF Form 980, Caution Tag, on the refueler operating control panel with inscription as follows:

CAUTION

This refueling unit has been drained of combustible product in accordance with TO 36-1-191. This vehicle was last in service carrying (insert type of fuel it last held).

8.22.3.6 Chemical Neutralization. Chemical neutralization is the primary method for vehicles last carrying flammable products (flashpoint below 100 °F). Oil, steam, and forced air purges are included as alternate methods and should be used only when facilities or equipment are not available to accomplish the chemical neutralization.

CAUTION

- Personnel engaged in neutralization or purging operations shall not wear wool, nylon, silk, rayon or other clothing fabric possessing tendency to generate static electricity.
- Wear clean, cotton clothing with no metal buttons, zippers, or fittings. Remove all contents from pockets.
- Use cotton cloths for cleaning/clean up purposes. (Other fabrics could generate static electricity).

8.22.3.6.1 Select level area 100 feet from any building, source of ignition, or sewer system. Position fuel servicing vehicle/fuel tank so that sump pump is at the lowest position possible.

8.22.3.6.2 Static ground tank(s) to an approved (earth) ground in accordance with TO 00-25-172.

CAUTION

- Ensure all metal drain containers are grounded to fuel tank and common ground point. Connections shall be made to clean unpainted surfaces.
- Dispose of full containers in accordance with AFMAN 23-110.

8.22.3.6.3 Locate at least two (2) fire extinguishers upwind and maintained by qualified individuals.

NOTE

- Have sufficient containers available to position one at each drain point.
- Dispose of drained fuel in accordance with AFMAN 23-110, as containers become full.

8.22.3.6.4 Completely drain each fuel tank/compartment including associated piping pumps, filters, and segregators. Open all valves and all fuel from tank pumping system using all available low point drains, tank sump, filter/separator manual drain, pump drain, line strainer, and bottom loading manifold, Remove all accessory items such as gauges and floats, which might entrap fuel.

8.22.3.6.5 Close/seal all drains or openings (it may be necessary to fabricate covers from some types of openings).

8.22.3.6.6 Fill fuel tank and overflow with cold water for a minute or 5 minutes. Drain tank completely.

8.22.3.6.7 Close or seal drains and openings once more. Mix one part detergent, MIL-PRF-85570D to 10 - 12 gallons of water (warm to hot preferred). Spray solution over interior surface of fuel tank. Slush contents to ensure complete interior coverage and allow mixture to stand 20 to 30 minutes. Open drain and flush with hot water.

CAUTION

Prior to welding or cutting of any tank, ensure the operation has been reviewed as required by AFOSH STD 91-5; by the Bioenviromental Engineer, Fire Department and Base Safety Office.

8.22.3.6.8 Check empty tank with vapor explosion level meter (ELM) NSN 6665-01-038-3006 or 6665-01-089-1910. A reading of less than 20 percent of the LEL is considered safe to ship (6 percent to weld). A second reading (at least 4 hours from first safe indication) must be taken prior to shipment or storage to ensure vapor fumes have not built back up to a unsafe level. Repeat neutralizing procedures until a safe level is observed via a minimum of two concurrent readings 4 hours apart.

8.22.3.6.9 Affix tag to fuel cap in a conspicuous location, which states. “Fuel has been drained and vapors chemically neutralized to safe explosive level reading”.

8.22.3.7 Forced Air Purge. Blower/air supply to be used with these procedures shall be an explosion proof blower of the type MA-1 or type HDU-13M. If these blowers are not available, the local ground safety unit may authorize the use of another type blower.

8.22.3.7.1 Select a level area 100 feet from any building, source of ignition or sewer system. Position fuel servicing vehicle so that the tank sump is in the lowest position possible.

8.22.3.7.2 Static ground the vehicle to an approved (earth) ground. If not available, drive a steel rod into the ground

until resistance between the rod and ground is in accordance with TO 0025-172.

8.22.3.7.3 Have sufficient fire extinguishers available, placed 50 feet upwind, manned by qualified individuals.

CAUTION

Ensure all metal drain containers are grounded to fuel tank and common ground point. Connections shall be made to clean unpainted surfaces. Dispose of full containers in accordance with AFMAN 23-110.

NOTE

Have sufficient containers available to position one at each drain point. Dispose of drained fuel in accordance with AFMAN 23-110, as containers become full.

8.22.3.7.4 Place conductive metal or galvanized containers under drain points. Ground containers to tank and to tank's common ground. Grounding connections shall be made to clean unpainted surfaces. Open all valves and drain all fuel from the tank pumping system using all available low point drains, tank sump, filter/separator manual drain, pump drain, line strainer and bottom loading manifold.

8.22.3.7.5 Leave all drains open, with a container to catch fuel, during the purging operation. This is to facilitate maximum air circulation.

CAUTION

Start blower/air supply before inserting duct into manhole opening. This is to prevent fuel vapors from entering duct and into blower.

8.22.3.7.6 Place blower/air supply 50 feet upwind of fuel servicing vehicle. Ground the blower to the static ground.

8.22.3.7.7 Connect duct to outlet side of blower/air supply.

8.22.3.7.8 Start blower/air supply.

8.22.3.7.9 Ground duct to the vehicle.

8.22.3.7.10 Insert duct in manhole; secure with tape or tie to vehicle.

CAUTION

Remove duct from manhole opening before shutting off air supply when taking combustible gas readings. Allow 10 minutes after removing duct before taking reading.

8.22.3.7.11 Purge tank for two hours.

NOTE

During purging operation, observe that air is being expelled at all drain, openings. Trapped fuel may prevent air from being circulated through all drains. In the event air is not coming out of a drain, temporarily close all other drains and observe if trapped fuel is expelled. Reopen drains.

8.22.3.7.12 Measure explosive vapor level of tank using combustible gas indicator. LEL readings should be 20 percent or less. Make readings in several areas of the tank. If reading is above 20 percent of the LEL resume purging operation.

8.22.3.7.13 Purge for one hour after safe reading is obtained.

8.22.3.7.14 Remove duct from manhole opening before shutting off blower/air supply.

8.22.3.7.15 Close all valves (including main tank shutoff valve) and low point drains. Leave manhole cover open.

8.22.3.7.16 Secure AF Form 1492, Warning Tag, on refueler operating control panel with inscription "OPEN MAIN TANK SHUTOFF VALVE BEFORE ENGAGING PUMP".

8.22.4 Oil Purge. This method is authorized as an alternate procedure where capabilities exist. The preferred fluids for this purge are specification MIL-PRF-38299C or 100 percent JP-5. Where time, operational commitments, or material constraints do not allow use of these, the following fluids are also authorized; Jet fuels, Grades Jet A, Jet A-1, and JP-8; Diesel fuels, Diesel Fuel Marine MIL-F-16884 and Diesel Fuel Regular CID A-A-52557A, Grades DFA, DFW, DF-1, and DF-2. No other purge fluids are authorized.

8.22.4.1 Static ground the tank to an approved ground (reference Technical Order 00-25-172).

8.22.4.2 Place containers under drains. Open all valves, and drain all fuel from the tank and pumping system using all available low point drains; tank sump, filter/separator manual drain, pump drain, line strainer, and bottom loading manifold.

8.22.4.3 Dispose of drained fuel in accordance with Technical Order 42B-1-23 or AFM 23-110.

8.22.4.4 Close all valves and drains.

8.22.4.5 Fill refueler cargo tank with purge fluid.

NOTE

Purge fluid shall be of the highest flash point available, but in no case, less than 100 °F (ASTM Standard D93 and Technical Order 1-1-3) prior to being pumped into the refueler cargo tank. Allow fluid to remain in tank for a minimum of 20 minutes,

8.22.4.6 Circulate 1,000 gallons of purge fluid through the under wing hose and bottom loading connection into the cargo tank. Circulate 500 gallons of purge fluid through the overwing hose back into the cargo tank. Empty the cargo tank and drain in accordance with Table 8-2.

8.22.4.7 Measure explosive vapor level of tank using combustible gas indicator. LEL readings should be 20 percent or less. If explosive level is greater than 20 percent of the LEL, repurge. Continue purging until safe vapor lever is obtained

CAUTION

This refueling unit has been drained of fuel, and oil purged in accordance with TO 36-1-191. Prior to servicing aircraft, the unit shall be purged with not less than 500 gallons of fuel to be dispensed by circulating through the system for approximately 10 minutes. This fuel shall be disposed of in accordance with local disposal procedures.

8.22.4.8 Secure tag, AF Form 1492, on refueler operating control panel with inscription “OPEN MAIN TANK SHUT-OFF VALVE BEFORE ENGAGING PUMP.”

8.22.5 Steam Purge. This method is authorized as an alternate procedure when capabilities to perform chemical neutralization, forced air, or oil purge does not exist.

8.22.5.1 Select an area at least 100 feet from any building, source of ignition or sewer system. Slope of land must be away from inhabited or operational facilities.

8.22.5.2 Static ground the tank to low resistance ground (reference TO 00-25-172); bond the tank to metal water supply plumbing to be used in rinsing operations.

8.22.5.3 Have appropriate fire extinguishers available and manned.

8.22.5.4 Ensure that personnel wear only cotton clothing (non-static generating).

8.22.5.5 Open all valves and drain all product from the tank and pumping system using all available low point drains to include the tank sump, filter/separator manual drain and pump drain plug, bottom loading manifold.

8.22.5.6 Remove the tank-to-pump line strainer and plug the forward end of the strainer to prevent carryover of moisture during tank purging or remove the entire strainer assembly.

CAUTION

Precautionary measures should be taken to insure steam does not come in contact with electrical wiring and components.

8.22.5.7 Steam clean tank by introducing steam through the manhole and baffle Plate opening into each tank compartment in sufficient volume to raise and maintain a temperature within the tank of not less than 207 °F and not more than 212 °F. Close manhole cover to the extent steam line will permit. Steam the tank for at least three hours.

8.22.5.8 Measure explosive vapor level using combustible gas indicator. LEL readings should be 20 percent or less. If explosive level is greater than 20 percent of LEL, repeat steam cleaning for one hour. Continue steam cleaning until an explosive vapor level is obtained below 20 percent of LEL.

8.22.5.9 Remove plug from tank-to-pump suction line, replace strainer basket, and close all pumping system valves (including main tank shutoff valve).

8.22.5.10 On vehicles equipped with uncoated steel tanks, except stainless steel, spray each tank compartment with preservative oil, specification MIL-PRF-21260E, Type 1, Grade 30. Install tag, AF Form 1492, on refueler operating control panel with inscription as follows:

CAUTION

This refueler has been drained of fuel and preserved with lubricating oil conforming to MIL-PRF-21260E. Prior to servicing aircraft, the unit shall be purged with fuel to be dispensed by circulating through the system for approximately 10 minutes. This fuel should be disposed of in accordance with local disposal procedures. Install new filter or separator elements before placing the vehicle in service.

8.22.5.11 Leave manhole(s) open.

8.22.5.12 Secure tag, AF Form 1492, on refueler operating control panel with inscription "OPEN MAIN TANK SHUTOFF VALVE BEFORE ENGAGING PUMP".

8.22.6 Segregators.

8.22.6.1 A suitable soft wood block will be placed beneath segregator floats to relieve weight of float assembly on needle valve; the cover will then be replaced and attached with only a sufficient number of bolts to retain cover in place. When installing, care will be exercised to insure that float assembly will not be compressed against wood block.

8.22.6.2 Other bolts, nuts and washers will be placed in a shipping bag and attached to the segregator.

NOTE

If the unit is purged by the steam method, all internal pans shall be cleaned, dried, and coated with preservative oil, specification MIL-L-21260E, Type 1, Grade 30.

8.23 FOLLOW-ON PROCEDURES.

8.23.1 Leave the refueler in a covered and ventilated area with the manhole(s) open until such time as the refueler is to be loaded aboard an aircraft.

8.23.2 To maintain a safe vehicle, the tank shall be checked, using the combustible gas indicator every 12 hours until the vehicle is loaded for shipment. If the reading is above the safe limit of 20 percent LEL, the tank must be repurged.

8.23.3 Explosive vapor level of the vehicle will be taken one-half hour before loading and the reading recorded on the AF Form 1492 attached to the operating control panel.

8.24 PREPARATION FOR AIRLIFT OF FUEL SERVICING VEHICLES UNDER FIELD CONDITIONS (APPLICABLE TO ACC, AFSOC, AND ANG UNITS ONLY).

8.24.1 Safety Precautions. All personnel involved in these operations must strictly adhere to the following safety precautions. The buddy (two person) system must be used at all times.

8.24.2 Remove all static-collecting/spark-producing clothing jewelry and equipment prior to starting work.

8.24.3 All personnel performing these operation will wear safety shoes.

8.24.4 Smoking materials, lighters and matches must be excluded from the work area.

8.24.5 Personnel will mount the fuel servicing vehicle from the upwind side only.

8.24.6 The fuel servicing vehicle will be parked in a well ventilated area as remote as possible and down wind from the nearest buildings, vehicles/fixed equipment.

8.24.7 Ground the vehicle.

8.24.8 Place a 50 pound, or larger, fire extinguisher 50 feet upwind of the fuel servicing vehicle being purged.

8.24.9 Ensure proper respiratory protection is provided. Contact local Bioenvironmental Engineer for type of respiratory protection required.

WARNING

Personnel must grasp the static ground to discharge body static before approaching the fuel servicing vehicle.

8.24.10 Drain the fuel servicing vehicle tank and plumbing. Leave drain valves and vents open.

8.24.11 Open vehicle tank accesses and soak up fuel puddles with non-static collecting/non-spark producing cloth rags wrapped on a wooden stick.

8.24.12 Purge system IAW Paragraph 8.24.13 or Paragraph 8.24.14.

8.24.13 Oil-Fog Purging.

8.24.13.1 Close all valves which serve to isolate the fuel pump and plumbing which cannot be drained.

8.24.13.2 Remove caps and plugs to gain maximum access to other plumbing.

8.24.13.3 Spray coat all inside surfaces of the fuel servicing tank and accessible plumbing with 10 weight motor oil using a paint sprayer equipped with a fogging nozzle.

8.24.13.4 After one-half hour proceed to Paragraph 8.24.15

8.24.14 Pump Purging with Automotive Diesel Fuel. This procedure may be used in lieu of oil fog purging where the supply/disposal of automotive diesel, fuel does not present a problem.

8.24.14.1 Add automotive diesel fuel to the fuel servicing tank. Use 25 gallons for ME-1 trailers or 40 gallons for M99 vehicle.

8.24.14.2 Circulate the diesel fuel by pumping for 10 to 20 minutes while directing the flow from the dispensing nozzle to wash down all wall surfaces of the tank.

8.24.14.3 Soak up fuel puddles with non-static collecting/non-sparking cloth rags wrapped on a wooden stick.

8.24.14.4 Pump diesel fuel into available diesel vehicle fuel tank(s).

8.24.14.5 After one-half hour proceed to Paragraph 8.24.15.

8.24.15 Take meter reading of the lower explosive level (LEL) and repeat purge procedures, if required, until a LEL of 20 percent or less has been achieved.

8.24.16 When safe limits have been obtained, close fuel caps/lids, install all plumbing caps/plugs securely, reinstall M99 filters as applicable, and seal all plumbing caps/plugs and filter cap/lid with pickling tape.

8.24.17 Equipment Required.

8.24.17.1 One each spray gun, paint (with fogging nozzle).

8.24.17.2 One each hose, air (length in excess of 60 feet).

8.24.17.3 Two quarts, 10 weight motor oil.

8.24.17.4 Rags of sufficient quantity (non-static collecting/non-spark producing.)

8.24.17.5 One each 50 pound or larger fire extinguisher for use with Class B and C fires.

8.24.17.6 One each roll of pickling tape.

8.24.17.7 Time required to perform this task: approximately two hours with three persons.

NOTE

For diesel fuel purge, see Paragraph 8.24.14.4 and Paragraph 8.24.14.5. Add sufficient automotive diesel fuel for vehicle in question (25 gallons for M1B trailer, 40 gallons for M99 vehicle).

CHAPTER 9
INTERMEDIATE AND DEPOT REPAIR OF VEHICLES AND COMPONENTS

9.1 PURPOSE.

To implement the Air Force policy for depot overhaul of vehicles, as cited in AFI 23-302, and to prescribe the procedures for obtaining this class of maintenance support.

9.2 SCOPE.

This publication applies to all Air Force activities, including Air National Guard units, operating and maintaining vehicles and vehicular equipment.

9.3 RECOMMENDED CHANGES.

Request for changes with specific justification will be submitted on AFTO Form 22 as outlined in TO 00-5-1. Forms should be forwarded to 580 CBSS/GBL, Robins AFB, GA 31098-5345.

9.4 DEPOT MAINTENANCE.

9.4.1 Refer to AFI 23-302 for overhaul policy and procedures as applied to depot maintenance of vehicles and vehicle components.

9.4.2 Maintenance can be accomplished by replacement of unserviceable assemblies, local contract, or evacuation to a repair site or depot. The Production Manager shall determine the most practical and economical method of obtaining maintenance support. In no case will a complete vehicle be evacuated to a repair facility when the vehicle can be returned to service by replacement of components either by the intermediate maintenance activity or local contract.

9.5 MAINTENANCE CRITERIA AND PRODUCTION CYCLES.

Overhaul of AF vehicles approved herein for Depot Maintenance will be accomplished in accordance with 580 CBSS/GBL prepared work specifications and Technical Orders applicable to the vehicle(s) undergoing overhaul. Overhaul cycles are specified in applicable contractual documents or Depot Maintenance Interservice Agreements (DMISA). Excluded is transit time to and from the maintenance facility. Type maintenance required, production cycles, vehicle types, type agreement, and type facility is shown in Table 9-1.

9.6 ESTIMATED COMPLETION DATES.

Arrival dates and estimated completion dates are posted on the contractors monthly production report that can be obtained from the Warner Robins depot web page **https://sevpgm.robins.af.mil/Depot/program/default.asp**.

9.7 AUTOMATED AIR FORCE TECHNICAL ORDER (AFTO) FORM 91-1 REQUIREMENT.

A copy of the original AFTO Form 91, Limited Technical Inspection Motor Vehicle, updated to include any change in condition of the vehicle, shall be included with the vehicle when shipped to a Depot Overhaul Facility. Overhaul activities shall be accomplished in strict accordance with WR-ALC Work Specification and applicable Technical Orders.

9.8 VEHICLE INSPECTION/ACCEPTANCE.

In accordance with contract, the sole responsibility for inspection and acceptance of overhauled vehicles remains with the Defense Contract Administration Services personnel.

NOTE

User commands may dispatch (or may be requested to dispatch) personnel to a depot maintenance facility to witness or to assist with inspection, testing, and acceptance of their vehicle(s). However, approval to dispatch personnel must be granted by 580 CBSS/GBL on an individual basis prior to dispatch.

TYPE DEPOT AGREEMENT	FACILITY	TYPE VEHICLE	AVG PRODUCTION CYCLE	
AF CONTRACT	CONTRACTOR	ALL	90/120 DAYS	OVERHAUL OVERHAUL

PN-TO36-1-191-126

Figure 9-1. Maintenance Criteria and Production Cycles

9.9 WARRANTY DISCREPANCY REPORTING.

The Depot Maintenance Facility is required to provide an overhauled vehicle capable of performing its intended purpose and function. With the exception of tires and problems attributed to operator abuse, transportation damage, or negligence, failures occurring during the warranty period are considered to be the responsibility of the overhaul facility and are subject to the provisions of the DMISA or contract. Direct contact by the vehicle VFM and the overhaul contractor or designated representative is authorized to correct warranty deficiencies. If problems are encountered, contact 580 CBSS/GBL by message or telephone for assistance in resolving warranty problems. The overhaul vehicle warranty period is in accordance with the specific contract.

9.10 580 CBSS/GBL.

580 CBSS/GBL will evaluate and approve or disapprove all requests for vehicle depot overhaul according to WR-ALC Form 0-317 and the following criteria:

9.10.1 Vehicles coded (S) in the repair column of the USAF Management List in Federal Catalogs are eligible for depot overhaul when the following conditions are met:

9.10.1.1 The owning command's inventory of the vehicle and suitable substitutes on which overhaul is requested is within approved authorizations and the command certifies vehicle is essential to the command mission.

9.10.1.2 Replacement cannot be supplied within one year and scope of the repairs listed on the LTI as being required are beyond the practical repair limitation of the using activity and justify evacuation of the vehicle to a depot overhaul facility. Commands will certify that repairs are beyond base and intermediate level capability.

9.10.1.3 The cost of repairs, estimated on the LTI, do not exceed 75 percent of the cost of the replacement item and transportation to repair facility.

9.10.2 Depot overhaul will not normally be accomplished when:

9.10.2.1 The using command's inventory of the authorized item and suitable substitute exceeds their authorization.

9.10.2.2 The vehicle on which depot overhaul is requested is being applied as an unsuitable substitute for another.

9.10.2.3 Vehicles designated by type and model by the 580 CBSS/GBL Equipment and Vehicle Management Directorate, as being unworthy of continued depot overhaul due to age or obsolescence of major components.

9.10.2.4 The LTI indicates the vehicle has reached a state of deterioration so that further repairs would be impractical regardless of the owning command's asset position (practically all major systems require rebuild, major accident damage, major components missing, etc.).

9.10.2.5 The LTI indicates that the repairs required are clearly within the intermediate maintenance capability, e.g., minor repair or repair or replacement of only one or two major components, etc.

9.10.2.6 The vehicle is assigned to the requesting command on a Code ASC 048 (For Retention Only).

9.10.2.7 The cost of overhaul plus the cost of one way transportation from assigned base to over haul site exceeds 75 percent of the replacement cost of a new vehicle. This must be tempered by judgment. In some cases, it may be essential to accomplish the overhaul, but in all cases the commands will be challenged as to the impact non-overhaul would have on the command mission.

9.10.2.8 A serviceable replacement vehicle can be supplied from any source in lieu of overhaul.

9.10.2.9 A replacement is scheduled for delivery from new procurement within one year, and the command allocation is sufficient to allow replacement in lieu of overhaul.

9.11 VEHICLES AND COMPONENTS NOT ELIGIBLE FOR DEPOT MAINTENANCE.

Vehicles coded (U) and vehicle components coded (X), (P), or (N) in the repair column of the USAF Management List in the Federal Supply Catalogs are not eligible for depot maintenance.

9.12 VEHICLE COMPONENTS ELIGIBLE FOR DEPOT MAINTENANCE.

Vehicle components coded (T) in the repair column of the USAF Management List in the Federal Supply Catalogs are eligible for depot maintenance and will be processed for overhaul in accordance with AFMAN 23-110.

9.13 AUTHORIZED DEPOT VEHICLES.

Those vehicles on which depot level maintenance is authorized are listed in Table 9-1.

Table 9-1. Depot Eligible Vehicles

NOMENCLATURE	TYPE
Fire Fighting Equipment	A/S32P-19, A/S32P-19A, A/S32P-19B, A/S32P-22 (Kovatch 1989 to 1992), A/S32P-23, A/S32P-24 (Kovatch 1989 to 1992), and partial depot of A/S32P-26 (West Mark 1993 and 1994)
Truck, Refueler	A/S32R-9 (1980 model and later) and A/S32R-11
Truck, Hydrant Hose	R-12 (BETA)
	R-12 Tri-State HSV
Runway Vacuum Sweeper	A/S32M-3
Aircraft Towing Tractor	MB-2 and U-30
25K Truck, A/C Cargo Loading/Unloading 463L	A/S32H-5 and A/S32H-5A
40K Truck, A/C Cargo Loading/Unloading 463L	A/S32H-6 and A/S32H-6A
60K Loader, A/C Cargo Loading/Unloading 463L	Tunner
Tow Tractor	Entwistle, FMC, Stewart & Stevenson, and split cabs

9.14 MAINTENANCE ASSISTANCE.

Requests for maintenance assistance on vehicles will be processed through the major command headquarters to 580 CBSS/GBL in accordance with TO 00-25-107. The major command involved must certify the assistance required is essential to the mission and beyond the practical limitations of the using command's resources (intermediate maintenance, local contract, or interservice agreement with other DoD agencies).

9.15 580 CBSS/GBL.

580 CBSS/GBL will provide organizational and intermediate maintenance assistance to the requiring command, in accordance with the provisions of TO 00-25-107.

9.16 VEHICLE REQUIREMENTS.

580 CBSS/GBL will send to each command, by 15 May, a printout of Current Vehicle Requirements and Vehicle Repair Projections. Each CONUS and overseas base will submit current year revalidation and five outyears projected requirements, to their respective major command, by 15 July of each year. Major commands will consolidate and validate depot maintenance requirements and input these requirements to 580 CBSS/GBL via the appropriate data system. This data will be used by 580 CBSS/GBL to prepare the MAJCOMs Logistics Support Review Brochure. MAJCOMs are provided an advance copy of this brochure upon publication and prior to the Logistics Support Review.

NOTE

Host base will consolidate repair requirements for tenant organizations and submit in accordance with above instructions. Information copy shall be forwarded to tenant organization's respective commands.

9.17 ADDITIVE REQUIREMENTS.

Overhaul requirements, which generate after the initial submission of annual requirements or cancellation of items included in the initial submission, will be submitted by bases to the appropriate major command. MAJCOMs shall submit out-of-cycle requirements with a completed current LTI and cover letter to 580 CBSS/GBL. The cover letter shall certify that the vehicles submitted meet the criteria for depot overhaul as contained in this technical order; that the required repair is beyond command capabilities; and that the funds are/will be available to cover the requested additions. If the necessary funds are not available MAJCOM must determine if the substitution of a previously scheduled/approved vehicle of the same NSN is required. These instances must be kept to an absolute minimum. There shall be NO substitution for vehicles scheduled for depot overhaul unless specifically authorized by 580 CBSS/GBL.

9.18 REQUEST FOR DEPOT OVERHAUL.

Wing level vehicle managers will forward a completed LTI with full justification for overhaul to the appropriate major command headquarters. Ensure the LTI shows not only currently unserviceable components, but also those reasonably expected to deteriorate to an unserviceable state over the next 5 years. Major commands will consolidate overhaul requirements and forward with cover letter to 580 CBSS/GBL in accordance with schedule as defined in Paragraph 9.19. The cover memorandum shall certify that the vehicles submitted meet the criteria for depot overhaul, as contained in this chapter, and the required repair is beyond base/command capabilities. Requests received without these certifications will be returned without action.

9.19 VEHICLE REPAIR SCHEDULING.

Commands will obtain, from the bases, LTIs for vehicles requiring overhaul in the upcoming fiscal year. Any vehicles previously scheduled for depot overhaul which (upon physical inspection) do not meet the criteria for depot overhaul will be rescheduled to an appropriate out-year. Deletions or changes will be updated in the appropriate data system. LTIs will be consolidated, by the command, and forwarded by cover letter to be received by 580 CBSS/GBL not later than 15 Aug of each year. Desired quarter of input for overhaul should be annotated on the LTI and in the appropriate data system. 580 CBSS/GBL will schedule programmed requirements as close as possible to the requested induction schedule. LTI will be used to determine if overhaul is required and to rank vehicle overhaul priority by overall condition.

9.20 ATTACHMENTS.

Missing accessories, removed by owning activity, will not be replaced by depot, i.e., crane attachments, servicing hose, dozer blades, fire fighting equipment, etc. There shall be no substitution for vehicles scheduled for depot overhaul unless specifically authorized by 580 CBSS/GBL.

9.21 APPROVAL.

If depot overhaul of a vehicle is approved by 580 CBSS/GBL, instructions for shipment to an overhaul facility will be issued at the appropriate time by 580 CBSS/GBL.

9.21.1 580 CBSS/GBL will make necessary evaluation on a case-by-case basis to determine what level of maintenance best serves the needs of the Air Force. In making this determination, consideration will be given to the transportation costs of shipping a vehicle to and from an overhaul facility, the overall Air Force asset/requirement position, turn around time, the cost of new procurement as opposed to depot level overhaul, and the local capability to obtain repair through contract maintenance or interservice support.

9.21.2 580 CBSS/GBL will provide commands with necessary statements of work, work specification, etc., as may be needed to assist local VFM in administration of local contract maintenance or interservice support agreements for depot level overhaul.

9.22 CONTRACTORS.

Commercial concerns and Department of Defense Interservice Support Agents performing depot overhaul services for the Air Force will use AFTO Form 439, Overhaul Contractor End Item Report (Serialized Control). Copies of this report will be forwarded to major command headquarters monthly. AFTO Form 439 is located on WR-ALC website.

Table 9-2. Command Abbreviations

Command Abbreviation	Command Name
ACC	Air Combat Command
AETC	Air Education Training Command
AFMC	Air Force Materiel Command
AFRC	Air Force Reserve Command
AFSOC	Air Force Special Operations Command
AFSPC	Air Force Space Command
AMC	Air Mobility Command
PACAF	Pacific Air Forces
USAFE	United States Air Forces in Europe

NOTE

Field Operating Agencies and Direct Reporting Units are not listed.

APPENDIX A
TUNNER (60K) AIRCRAFT CARGO LOADER

A.1 GENERAL INFORMATION.

This Appendix includes the instructions for Level A and Level B long term storage of the TUNNER (60 K) Aircraft Cargo Loader. Table A-1 includes the steps required to preserve the TUNNER in the recommended sequence. Special considerations required to remove the TUNNER from long term storage are included in the right hand column and should be performed in reverse order unless otherwise specified.

Operation of the TUNNER requires special knowledge and procedures that operators of other vehicles are not familiar with. For this reason, copies of TO 36M2-3-35-11 and TO 36M2-3-35-12 should be used by the personnel performing the specified operational and maintenance tasks.

For Level A long term storage of the TUNNER in one location, the TUNNER will be in the normal configuration (not reconfigured for air transport). The chassis will be lowered until the suspension is almost fully contracted, with the chassis resting on four 6-inch blocks or beams, relieving pressure from the suspension system. The deck will be lowered fully until it is firmly on the chassis. Other configurations may be required for various modes of transportation for Level A and B storage and are described in TO 36M2-3-35-1, but after transport, when parked for storage, it shall be lowered to the position described above and in Table A-1 under Chassis for Level A.

For reduction of the cube, the cab may be moved inboard using procedures in TO 36M2-3-35-11, Paragraphs 2-16.1.2. Hoses and cables must be protected from contact with the ground.

(Lowering the suspension and the deck all the way minimizes the exposure of the critical rod surfaces of hydraulic cylinders to the environment and minimizes the degree of preservation tasks required. It also provides maximum protection for all loader components from the weather. Resting the chassis on blocks at a low height takes loading off the suspension hydraulic components and eliminates the risks of hydraulic leakage which could cause suspension drop and result in excessive uneven loads on TUNNER components. For these reasons, the TUNNER should not be left unmonitored for extended periods of time in the air transport configuration. Suspension isolation valves should NOT be closed during storage, as this would make system relief valves ineffective and could allow excessive loads and pressures from thermal changes and leakage).

(Specific steps for preparation for long term storage and removal from storage have been simplified by requiring the standard Operational Checks and the 250 hour maintenance procedures be performed upon removal from storage. This assures proper operation and clean filters, etc., using standard Technical Order procedures.)

Table A-1. Tunner (60 K) Aircraft Cargo Loader

Line No.	Subject	Table 8-2 Item No.	Level	Instruction And Remarks	Reconfiguration Requirements
1	Chassis		A	Lube all bearings and pivot points per lube data plate. Except for periods when other configurations are specified on to 6-inch blocks or supports, sized for ground conditions to prevent settling (10 tons per block). A minimum of 4 blocks shall be positioned under the chassis in the positions specified for jack stands in TO 36M2-3-35-12, WP 007 00, Paragraph 2. More blocks forming a level support plane may be used under similar chassis locations to reduce individual block loads. After contact with blocks, continue operating "Suspension Lower" for 1 min. to relieve all suspension pressure. DO NOT CLOSE SUSPENSION ISOLATION VALVES. Do final lowering of chassis just prior to line 14.	Perform Operational Checks per TO 36M2-3-35-11, Section 2-6 and the 250 hour maintenance procedures TO 36M2-3-35-12, WP 006 00, Table 1.
			B	Chassis to be stored at travel height with the deck down except for periods when other configurations are specified for required transport modes. See TO 36M2-3-35-11 for instructions for these transport modes.	Perform Operational Checks per TO 36M2-3-35-11, Section 2-6.
2	Paint and Touchup	85	A&B	Refer to TO 36M2-3-35-12, WP 009 00.	

Table A-1. Tunner (60 K) Aircraft Cargo Loader - Continued

Line No.	Subject	Table 8-2 Item No.	Level	Instruction And Remarks	Reconfiguration Requirements
3	Tires, Mounted	113	A	Prepare per Table 8-2, Item 113, Level A	Remove wrapping and adjust tire pressure per TO 36M2-3-35-11, Section 3-5.7.
		113	B	Prepare per Table 8-2, Item 113, Level B	Adjust tire pressure per TO 36M2-3-35-11, Section 3-5.7.
4	Brake Systems, Air	20	A	Three air reservoirs shall be drained and sprayed per Table 8-2, Item 20, Level A. See TO 36M2-3-35-12, WP 027 00, Figure 1 for location of air reservoirs and drain plugs. No other processing required.	Close reservoir bleed valves. Replace dryer/filter per TO 36M2-3-35-12, SWP 027 01. (part of 250 hour maintenance procedures)
			B	No processing required.	
5	Compressor, Air	37	A	Prepare per Table 8-2, Item 37, Level A, Spray preservative oil into the compressor inlet by removing the hose that goes to the engine inlet tube. Retighten the hose to the compressor. Crank case oil does not need service.	
			B	No processing required.	

Table A-1. Tunner (60 K) Aircraft Cargo Loader - Continued

Line No.	Subject	Table 8-2 Item No.	Level	Instruction And Remarks	Reconfiguration Requirements
6	Hydraulic System		A	Coat unpainted (plated and anodized aluminum) manifold and valve surfaces with coating GD I per MIL-C-16173. Coat bare plated surface of 2 (side shift) deck support pins with GD I coating. Observe the length of cylinder rods that will be exposed in the final deck and chassis position and coat only the portion with GD I coating. Adjust the hydraulic fluid level carefully to the level on the data plate, for the current temperature and at the deck and chassis position specified. (Slight overfill may cause spillage and under fill may damage pumps with suspension or deck up for various transport configurations at extreme temperatures) DO NOT COVER RESERVOIR BREATHER OR RELIEF VALVE.	Remove coating from deck support pin and cylinders with solvent per P-D-680. If desired, remove coating from manifolds and fittings with solvent per P-D-680 (coating does not affect operation and may extend plating life, but coating must then be removed locally during future repair operations to prevent system contamination).
			B	Same as Level A except coating GD II per MIL-C-16173 may be used as an alternate. Cylinders shall be coated only if stored at one height over 10 days in highly corrosive locations.	Same as Level A.

Table A-1. Tunner (60 K) Aircraft Cargo Loader - Continued

Line No.	Subject	Table 8-2 Item No.	Level	Instruction And Remarks	Reconfiguration Requirements
7	Gear Boxes	46	A&B	Torque Hubs (4) and engine splitter box; Prepare per Table 8-2, Item 46, Level A&B except use lubricants specified in TO 36M2-3-35-11, Section 3-4.	Recheck fluid level.
8	Cooling System and Radiator	40	A&B	Prepare cooling system per Table 8-2, Item 40, method a. or b. as applicable for storage temperature range, or existing coolant may remain in the cooling system if it is clean, recently installed and tested for adequate freezing point with a hydrometer. Long term storage of radiators for replacement parts per MIL-STD-2073-1C, Method 53.	Install proper coolant type and mixture for operating conditions, if not already installed. See TO 36M2-3-35-12, WP 025 00 for unique antifreeze specification and filling/bleeding procedures. Prior to installation, the radiator is to be flushed with water for 2-5 minutes to remove the oil preservation that has been applied to the interior of the radiator.
			NOTE		
	Warm water is preferred.				
9	Crankcase, engine	51	A	Prepare per Table 8-2, Item 51, Level A	Replace with lubricating oil per TO 36M2-3-35-12, WP 021 00.
		51	B	Prepare per Table 8-2, Item 51, Level B	

Table A-1. Tunner (60 K) Aircraft Cargo Loader - Continued

Line No.	Subject	Table 8-2 Item No.	Level	Instruction And Remarks	Reconfiguration Requirements
10	Engine, Diesel	51	A&B	Prepare engine per Table 8-2, Item 51, using main paragraph (injecting preservative fuel) and sub paragraph d, “two cycle engine”. Refer to TO 36M2-3-35-12, SWP 026 02, Figure 1. Connect fuel supply to hose/line, item 19, and fuel return to hose/line, item 96.	Start and run engine for 10 min. after filling fuel tank. Remove warning tag.
11	Fuel Tank	10	A&B	Drain fuel tank completely, siphoning or pumping out most of the fuel and finally using drain plug in the bottom, accessible through clearance tube in carrier assembly (ref. TO 36M2-3-35-12, SWP 026 01, Figure 1). (Preservative oil not required because aluminum fuel tank is corrosion resistant).	Before refilling, fill with 5 gal. of fuel and then drain through drain plug to flush out condensation moisture and contamination.
12	Air Cleaners, Air Type	2	A	Prepare per Table 8-2, Item 2, Level A	Remove tape from openings.
		2	B	Prepare per Table 8-2, Item 2, Level B	Remove tape from openings.
13	Exhaust System	55	A	Paint and tape outlet opening per Table 8-2, Item 55, Level A	Remove tape from openings.
		55	B	Tape outlet opening per Table 8-2, Item 55, Level B	Remove tape from openings.
14	Belt, Drive	6	A	Prepare per Table 8-2, Item 6, Level A except re-tighten belts after paint has dried. (Engine must operate to raise deck at the beginning of reconfiguration and loose belts may be damaged.)	Check belt tension after initial operating period.

Table A-1. Tunner (60 K) Aircraft Cargo Loader - Continued

Line No.	Subject	Table 8-2 Item No.	Level	Instruction And Remarks	Reconfiguration Requirements
14-Continued		6	B	No processing required.	
15	Windshield washer reservoir		A&B	Adjust level to 1/2 full or less.	Fill to full level.
16	Deck		A&B	Lower the deck firmly to its rests using the emergency pump per TO 36M2-3-35-11, Section 2-11. Wrap roller trays, cover exposed omni rollers and cover conveyor openings with barrier material per MIL-B-131, class 1 and seal and secure with tape per MIL-T-22085. Six empty pallets locked in place can be used to further protect deck components and barrier material.	Raise the deck using the engine if all engine components are reconfigured and if it will start, or use the emergency pump per TO 36M2-3-35-11, Section 2-11. Remove barrier material and tape.

Table A-1. Tunner (60 K) Aircraft Cargo Loader - Continued

Line No.	Subject	Table 8-2 Item No.	Level	Instruction And Remarks	Reconfiguration Requirements
17	Heater, Cab		A	Remove heater fuel tank per TO 36M2-3-35-12, SWP 061 01 and drain out all fuel. Fog tank interior with P-10, Type 1, Grade 30 preservative per MIL-L-21260 and re-installed. Do not reconnect fuel line. Run heater until out of fuel (ref SWP 061 02, Figure 1). Drain fuel pump and filter. Drain all fuel system tubes and hoses and flush out residual fuel with solvent per P-D-680. After heater is cool, cover exhaust outlet with tape per MIL-T-22085. Attach a warning tag to the heater control that states "REMOVE TAPE FROM HEATER INLET AND EXHAUST AND CLEAN FUEL TANK BEFORE USE. SEE TO 36M2-3-35-12, WP 009 00, Paragraph 1-2."	Remove tape from exhaust and heater air inlet. Remove and clean tank with solvent per P-D-680. Check heater assembly, install tank, fill, start and test heater per TO 36M2-3-35-12, WP 009 00, Paragraph 1-2. Remove tag.
			B	No processing required.	
18	Systems, Electrical		A&B	Open and inspect all electrical enclosures (boxes) and repair, if required, sealing gaskets. Check drain holes for obstructions. Close and tighten all lids and doors securely.	Open and inspect all electrical enclosures for moisture and corrosion. Correct as necessary.

Table A-1. Tunner (60 K) Aircraft Cargo Loader - Continued

Line No.	Subject	Table 8-2 Item No.	Level	Instruction And Remarks	Reconfiguration Requirements
19	Batteries, Cables for Water Shipment	3	A&B	Prepare per Table 8-2, Item 3, except as noted here. Disconnect batteries per TO 36M2-3-35-12, WP 007 00, Paragraph 5-1. Disconnect battery terminals but do not remove batteries or service and paint battery compartment. Replace blanket and box cover. Catwalk may be raised to improve access.	Remove covering and connect battery cable per TO 36M2-3-35-12, WP 007 00, Paragraph 5-2.
20	Batteries, Cables for other than Water Shipment	4	B	Prepare per Table 8-2, Item 4.	
21	Lights	75	A&B	Prepare per Table 8-2, Item 75, Level A & B	Remove tape and paper if applicable.
22	Windows and Doors		A&B	Inspect window and door gaskets and seals. Repair if required. Close windows and door tightly.	
23	Hardware, Hinges, etc.	64	A&B	Prepare per Table 8-2, Item 64, Level A & B	Unpack and return to normal location.
24	Mirror and Spot Light	78	A&B	Position spotlights down as far as possible and fold mirror against cab.	Adjust to driver preference.

Table A-1. Tunner (60 K) Aircraft Cargo Loader - Continued

Line No.	Subject	Table 8-2 Item No.	Level	Instruction And Remarks	Reconfiguration Requirements
25	Cab		A&B	If required to reduce cube, slide cab inboard per TO 36M2-3-35-12, (WP 004 00, Paragraph 1-2). Protect hoses and cables from ground contact. Cover heater inlet opening with tape per MIL-T-22085. Cover top and sides of cab with barrier material per MIL-B-131, class 1 and seal and secure with tape per MIL-T-22085, leaving bottom edge of door unsealed to drain. Band around cab to prevent door opening with band per Q-Q-781.	Remove banding, tape and barrier material. Return cab to outboard position if applicable (per TO 36M2-3-35-12, WP 004 00, Paragraph 2).
26	Plates, ID	88	A&B	Prepare per Table 8-2, Item 88, Level A & B	
27	Extinguisher, Fire	56	A&B	Prepare per Table 8-2, 56, Level A & B	Unpack and return to normal location.
28	On-Vehicle Equipment	83	A&B	Prepare per Table 8-2, Item 83, Level A & B	Unpack and return to normal location.
29	Publications	90	A&B	Prepare per Table 8-2, Item 90, Level A & B Publications should include TO 36M2-3-35-11, TO 36M2-3-35-12 and TO 36M2-3-35-14 to facilitate reconfiguration instructions.	Unpack and return to normal location.