TECHNICAL MANUAL

CORROSION PREVENTION AND CONTROL, CLEANING, PAINTING, AND MARKING OF USAF SUPPORT EQUIPMENT (SE)

BASIC AND ALL CHANGES HAVE BEEN MERGED TO MAKE THIS A COMPLETE PUBLICATION.

DISTRIBUTION STATEMENT A - Approved for public release; distribution is unlimited. PA Case Number 05-07173. Submit recommended changes or problems with this Technical Order to 406 SCMS/GULAC, Robins AFB, GA 31098. Questions concerning technical content shall be referred to AFRL/RXSSR.

Published Under Authority of the Secretary of the Air Force

1 SEPTEMBER 2006

CHANGE 8 - 1 JUNE 2012

LIST OF EFFECTIVE PAGES

INSERT LATEST CHANGED PAGES. DESTROY SUPERSEDED PAGES.

NOTE: The portion of the text affected by the changes is indicated by a vertical line in the outer margins of the page. Changes to illustrations are indicated by shaded or screened areas, or by miniature pointing hands.

Dates of issue for original and changed pages are:

Original. . . . . .0 . . . 1 September 2006
Change . . . . . .1 . . . . . 5 June 2007
Change . . . . . .2 . . . . . 21 August 2007
Change . . . . . .3 . . . .26 February 2008
Change . . . . . .4 . . . . . 6 August 2009
Change . . . . . .5 . . . .1 September 2010
Change . . . . . .6 . . . . 24 February 2011
Change . . . . . .7 . . . . . .15 July 2011
Change . . . . . .8 . . . . . 1 June 2012

TOTAL NUMBER OF PAGES IN THIS PUBLICATION IS 198, CONSISTING OF THE FOLLOWING:

Page No.	*Change No.
Title	8
A	8
i	0
ii	5
iii	8
iv	4
v	8
vi Blank	0
vii	8
viii	4
ix	0
x	4
1-1 - 1-4	0
1-5	5
1-6	0
1-7	8
1-8 - 1-14	0
2-1	5
2-2	8
2-3	4
2-4	8
2-5	5
2-6	6
2-7 Blank	4
2-8	4
2-9	8
2-10 - 2-13	0
2-14	4
2-15	3
2-16	0
2-17 - 2-18	4
2-19 Added	4
2-20 Blank	4
3-1	4
3-2	8
3-2.1	5
3-2.2 Blank	4
3-3 - 3-4	8
3-4.1	8
3-4.2 Blank	3
3-5	0
3-6	6
3-7 - 3-8	0
3-9	4
3-10	0
3-11 - 3-13	8
3-14	0
3-15	4
3-16 - 3-18	8
3-19	0
3-20 Blank	0
4-1	0
4-2	8
4-3	0
4-4	6
4-5	8
4-6 - 4-17	0
4-18	4
4-19 - 4-31	0
4-32 - 4-33	3
4-34	0
4-35	2
4-36 - 4-45	0
4-46 - 4-47 Deleted	8
4-48	8
4-49 - 4-71	0
4-72	3
4-73	1
4-74 - 4-76	3
4-77 - 4-81	0
4-82	4
4-83 - 4-85	0
4-86 - 4-87	4
4-88	3
4-89	0
4-90	4
4-91	1
4-92	4
4-93 - 4-97	0
4-98	1
4-99 - 4-104	0
4-105 - 4-107	2
4-108	7
4-109 - 4-110	0
5-1	4
5-2	0
5-3 - 5-4	8
6-1 - 6-2	8
6-3	0
6-4 Blank	0
7-1 - 7-3 Added	4
7-4 Blank	4
A-1 - A-2	4
A-3 - A-4	0
A-5	4
A-6 - A-8	6

*Zero in this column indicates an original page.

TABLE OF CONTENTS

Chapter		Page
	LIST OF ILLUSTRATIONS	iv
	LIST OF TABLES	v
	FOREWORD	vii
	SAFETY SUMMARY	ix
1	CORROSION THEORY, IDENTIFICATION, CAUSES AND EFFECTS	1-1
1.1	Purpose	1-1
1.2	Definition of Corrosion	1-1
1.3	Chemical Definitions	1-1
1.3.1	Atom	1-1
1.3.2	Electron	1-1
1.3.3	Ions	1-1
1.3.4	Electrolyte	1-1
1.4	Theory of Corrosion	1-1
1.4.1	Anode	1-1
1.4.2	Cathode	1-1
1.4.3	Electrolyte	1-1
1.4.4	Electrical Path	1-1
1.5	Development of Corrosion	1-1
1.5.1	Corrosion Origination Locations	1-1
1.5.2	Corrosion Under Painted Surfaces	1-2
1.6	Factors Influencing Corrosion	1-2
1.6.1	Type of Metal	1-2
1.6.2	Dissimilar Metal Coupling (Galvanic Corrosion)	1-2
1.6.3	Anode and Cathode Surface Area	1-4
1.6.4	Climate	1-4
1.6.4.1	Desert	1-4
1.6.4.2	Temperate Zones	1-4
1.6.4.3	Tropics	1-4
1.6.4.3.1	Factors of Influence in Tropical Environments	1-4
1.6.5	Heat Treatment and Grain Direction	1-4
1.6.6	Electrolytes	1-4
1.6.7	Microbial Induced/Influenced Corrosion	1-6
1.6.8	Mechanical Stress	1-7
1.6.9	Time	1-7
1.6.10	Manufacturing	1-7
1.6.11	Storage	1-7
1.6.12	Degradation of Non-metals	1-7
1.6.13	Preventive Maintenance (PM)	1-7
1.7	Types of Corrosion	1-8
1.7.1	Uniform Etch Corrosion	1-8
1.7.2	Galvanic Corrosion	1-8
1.7.3	Pitting Corrosion	1-9
1.7.4	Intergranular Corrosion	1-9
1.7.5	Exfoliation Corrosion	1-9
1.7.6	Concentration/Crevice Corrosion	1-9
1.7.7	Stress Corrosion Cracking	1-11
1.7.8	Hydrogen Embrittlement	1-11
1.7.9	Corrosion Fatigue	1-11
1.7.10	Filiform Corrosion	1-11
1.7.11	Fretting Corrosion	1-12
1.8	Metals Affected By Corrosion	1-13
1.8.1	Magnesium	1-13
1.8.2	Steel	1-13
1.8.3	Aluminum	1-13
1.8.4	Copper and Copper Alloys	1-13
1.8.5	Stainless Steel	1-13
1.8.6	Nickel and Chromium	1-14
2	CLEANING	2-1
2.1	General	2-1
2.1.1	Introduction	2-1
2.1.2	SE Wash Cycles	2-1
2.1.3	Definition of Cleaning	2-1
2.1.4	Types of Cleaners	2-1
2.1.5	Methods of Cleaning	2-1
2.1.6	Cleaning Materials	2-8
2.1.7	General Cleaning Material and Processes	2-13
2.1.7.1	Cleaning Solutions	2-13
2.1.7.2	Cleaning Compounds	2-14
2.1.7.3	Water Temperature	2-14
2.1.7.4	Deployed/Remote Sites	2-14
2.1.7.4.1	Water Assessment	2-14
2.1.7.4.2	Engines and Engine Components	2-14

TABLE OF CONTENTS - CONTINUED

Section		Page
2.1.8	Cleaning of Non-metal Parts Prior to Painting	2-14
2.1.8.1	Composites	2-14
2.1.8.2	Plastics	2-14
2.1.9	Cleaning of Electrical Parts	2-14
2.1.10	Preparation of SE for Cleaning	2-15
2.1.11	Cleaning of Engine Components and Enclosures	2-15
2.2	MECHANICAL CLEANING	2-16
2.2.1	General Information	2-16
2.2.2	Coating Removal on Composite Surfaces	2-16
2.2.3	Coating Removal on Metallic Surfaces	2-17
2.2.4	Grinding	2-17
2.2.5	Wire Brushing	2-17
2.2.6	High-Pressure Water (HPW) Paint Removal Method	2-17
2.2.6.1	Authorized HPW Equipment	2-18
2.2.6.2	Training Requirements	2-19
2.2.6.3	Personnel and Equipment Preparation Prior to HPW	2-19
2.2.6.4	HPW Paint Removal Operation	2-19
2.2.6.5	Post HPW Paint Removal Cleaning	2-19
3	PAINTING, SEALING, CORROSION PREVENTIVE COMPOUND APPLICATION	3-1
3.1	General	3-1
3.2	Definition of Exposure	3-1
3.3	Requirements For Painting - Field Level	3-1
3.3.1	Complete Repainting Criteria	3-1
3.3.2	Abrasive Blasting	3-1
3.3.3	Temporary Coating Repairs	3-2
3.3.4	Touch-up Primer	3-2.1
3.4	Requirements For Painting - Depot Level and Contractor Support	3-2.1
3.4.1	Corrosion Rework Determination	3-2.1
3.4.2	Contractor Compliance	3-2.1
3.5	Authorized Colors, SEMPENS, and Materials	3-2.1
3.5.1	SE Standardized Colors	3-2.1
3.5.2	SE Standard Topcoat	3-3
3.5.3	Authorized Colors for Liquid Oxygen, Nitrogen Storage Carts and Tanks	3-4
3.5.4	Passenger or Loading Ramps	3-4.1
3.5.5	Presidential Support Equipment and USAF Demo Team	3-4.1
3.6	CORROSION TREATMENT FOR STEELCABLES	3-4.1
3.7	PIANO TYPE HINGES	3-4.1
3.8	MATING SURFACES PROTECTION REQUIREMENTS	3-4.1
3.8.1	Mating Surfaces - Bare Steel	3-4.1
3.8.2	Mating Surfaces - All Other Metals	3-4.1
3.8.3	Sealers and Sealant Usage	3-4.1
3.9	ACOUSTICAL MATERIAL PRECAUTIONS	3-6
3.9.1	Coustifoam PUI and AF	3-6
3.9.2	Nonmetallic Fastener	3-6
3.10	DRAINAGE	3-6
3.10.1	Fluid Collection Points	3-6
3.10.2	Modifying Fluid Collection Points	3-6
3.11	MAINTENANCE STAND RAILS AND RAIL HOLDERS	3-7
3.11.1	Drain Holes	3-7
3.11.2	Drain Hole Corrosion Prevention and Treatment	3-7
3.12	HOLLOW STRUCTURAL MEMBERS	3-7
3.12.1	Drainage for Closed Hollow Members, When Open Drain Holes are Possible	3-7
3.12.2	Drainage for Closed Hollow Members, When Open Drain Holes are Not Possible	3-7
3.13	CORROSION PREVENTIVE COMPOUNDS (CPC)	3-8
3.13.1	MIL-PRF-81309	3-8
3.13.2	MIL-DTL-85054	3-9
3.13.3	MIL-PRF-16173 CPC Solvent Cutback, Cold Application	3-9
3.13.4	MIL-PRF-63460 Lubricant, Cleaner, and Preservative for Weapons and Weapon Systems	3-9
3.13.5	MIL-L-87177 Lubricants, Water Displacing	3-9
3.13.6	CPC Methods of Application	3-9
3.14	CPC Application on Ferrous Alloys	3-9
3.15	CPC APPLICATION ON OTHER ALLOYS	3-9
3.16	COATING APPLICATIONS	3-10
3.16.1	Material Selection	3-10

TABLE OF CONTENTS - CONTINUED

Chapter		Page
3.16.2	SE Surface Preparation Categories	3-12
3.16.3	Organic Zinc-Rich Primer	3-12
3.16.4	MIL-PRF-85285 Polyurethane, Type I	3-13
3.16.5	Thermal Spray Coating Systems	3-13
3.17	Field Level Maintenance Painting Requirements	3-15
3.17.1	Touch-Up Painting	3-15
3.18	Maintenance Painting	3-15
3.18.1	Maintenance Painting Restrictions	3-15
3.18.2	Prepackaged Coating Touch-Up Kits	3-16
3.18.3	Radiators Coatings	3-16
3.19	Liquid Oxygen and Liquid Nitrogen Servicing Carts and Storage Tanks	3-16
3.19.1	Authorized Materials for Liquid Oxygen and Nitrogen Tanks	3-16
3.20	Walkways and Stepping Surface Coatings	3-16
3.21	Colors for Waste Containers	3-16
3.22	SE Undercoating	3-16
3.22.1	SE Undercoating Considerations	3-17
3.23	Storage Compartments	3-17
3.24	Split Wheel Assemblies	3-17
3.24.1	Split Wheel Coating Requirements	3-17
3.25	Mufflers	3-17
3.26	Miscellaneous Cleaning, Sealing, and CPC Requirements	3-18
3.26.1	Sealing of Addressograph or Dash-A Plates	3-18
3.26.2	Electrical Hardware and Terminals	3-18
3.26.3	Light Assemblies	3-18
3.26.4	Internal Electrical Components: Circuit Breakers, Relays, etc	3-18
3.26.5	Electrical Connectors	3-18
3.26.6	Switches	3-19
3.26.7	Wire Harness and Cables	3-19
3.26.8	Heli-Coil Insert Replacement	3-19
4	MARKING OF SUPPORT EQUIPMENT	4-1
4.1	General	4-1
4.2	Safety and Servicing Markings	4-1
4.2.1	National Star Symbol	4-1
4.2.2	Marking Requirements	4-1
4.2.3	Product Identification	4-1
4.2.4	SE Reflectorization	4-2
4.3	Agency Identification Markings	4-2
4.3.1	Air Force Owned - Contractor Operated Equipment	4-2
4.3.2	Mobilized Equipment	4-2
4.4	Informational Markings (Optional)	4-3
4.5	Color, Style and Size of Markings	4-3
4.5.1	Use of Reflective Tape, Decals, and Vinyl Lettering	4-3
4.5.2	Field Numbers	4-4
4.5.3	USAF Legends	4-4
4.5.4	Color Numbers	4-4
4.5.5	Markings Size	4-5
4.5.6	Tire Pressure/Tow Speed	4-5
4.6	Maintenance of Markings	4-5
4.6.1	Markings Removal	4-5
4.6.2	National Guard Decalcomania	4-5
4.7	Caution/Warning Markings	4-5
4.7.1	Pintle Hook Caution Marking	4-5
4.7.2	Spring Loaded Warning Marking	4-5
4.7.3	Aircraft Towbar Caution Marking	4-5
4.7.4	Tire Pressure/Tow Speed Markings	4-5
4.7.5	Personnel Static Discharge Marking	4-5
4.8	Fuel Cell Repair SE Identification	4-5
5	CORROSION PREVENTION AND CONTROL OF HUSH HOUSES	5-1
5.1	Materials	5-1
5.1.1	Fastener Replacement	5-1
5.2	Repair	5-1
5.2.1	Galvanized Steel	5-1
5.2.2	Carbon Steel	5-1
5.2.3	Stainless Steel	5-1
5.2.3.1	Type 321 Stainless Steel	5-2
5.2.3.4	AISI 409 Stainless Steel	5-2
5.2.3.7	Sealing	5-2
5.3	Pretreatment Compounds	5-2
5.3.1	Rust Remover 81287 (Naval Jelly)	5-2
5.4	Primers	5-3
5.4.1	Organic Zinc-Rich Primers	5-3
5.4.2	Inorganic Zinc-Rich Primers	5-3
5.5	Painting	5-3

TABLE OF CONTENTS - CONTINUED

Chapter		Page
5.5.1	Structural Corrosion Protection	5-3
5.5.2	Camouflage Requirements	5-3
5.6	Inorganic Zinc Primed Surfaces	5-3
5.6.1	Primer Requirements on the Door Frame Beams, Support Beams, and Exhaust Tube	5-3
5.7	Galvanized Surfaces	5-4
5.7.1	Roof	5-4
5.7.2	Walls and Doors	5-4
6	CORROSION PREVENTION AND CONTROL OF NOISE SUPPRESSOR SYSTEMS (NSS)	6-1
6.1	General	6-1
6.2	Materials	6-1
6.3	Fastener Replacement	6-1
6.4	Structural Repair	6-1
6.4.1	Structural Repair Carbon Steel	6-1
6.4.2	Galvanized Steel	6-1
6.4.3	AISI 409 Stainless Steel	6-1
6.5	Sealing	6-2
6.6	Primers	6-2
6.6.1	Organic Zinc-Rich Primers	6-2
6.6.2	MIL-PRF-23236, Type I, Class 3	6-2
6.6.3	Heat Resistant Primer Briner 2905	6-2
6.6.4	Heat Resistant Silicone Coating - Briner 2986	6-2
6.6.5	High Temperature Resistant Silicone Coating - Briner 4765	6-3
6.6.6	High Temperature Resistant Silicone Coating Thurmalox 270-18	6-3
7	SOUTHWEST ASIA OPERATIONS AND ENVIRONMENTS	7-1
7.1	General	7-1
7.1.1	Environmental Effects	7-1
7.1.1.1	Soils and Humidity	7-1
7.2	SE SWA AOR Deployment	7-2
7.2.1	Pre-deployment	7-2
7.2.2	Deployment Location	7-2
7.2.2.1	SE Units Requiring Additional Cleaning	7-2
7.2.3	Maintenance Touch-Up Painting	7-3
7.2.3.1	Temporary Coating Repair	7-3
7.2.3.2	Permanent Authorized Touch-Ups	7-3
7.2.4	Equipment Storage	7-3
A	EQUIPMENT AND CONSUMABLE MATERIALS USED FOR CORROSION CONTROL	A-1
A.1	Equipment and Consumable Materials	A-1

LIST OF ILLUSTRATIONS

Number	Title	Page
1-1	Diagram of a Simplified Corrosion Cell and an Example of Raised Corrosion Product	1-2
1-2	Corrosion Accelerated by Condensed Moisture	1-5
1-3	Open Cell Foam and Resulting Corrosion	1-6
1-4	View of the Results of Microbial Induced Corrosion	1-6
1-5	Example of Uniform Etch	1-8
1-6	Example of Galvanic Corrosion - Steel Hinge Bolted to an Aluminum Door	1-9
1-7	Example of Pitting Corrosion	1-9
1-8	Illustration of an Intergranular Corrosion Cell	1-10
1-9	Example of Exfoliation Corrosion	1-10
1-10	Examples of Concentration/Crevice Corrosion	1-10
1-11	Illustration of a Typical Concentration Corrosion Cell	1-11
1-12	Example of Filiform Corrosion	1-12
1-13	Illustration of a Fretting Corrosion Cell	1-12
3-1	Example of Standing Water Due to Inadequate Drainage Provisions	3-6
3-2	Hollow Member Drain Hole Configuration	3-7
3-3	Hollow Member Weld-Nut Configuration	3-8
3-4	Corrosion Under Data Plate	3-18
4-1	NATO Liquid Oxygen Servicing Markings	4-1
4-2	NATO Liquid Nitrogen Servicing Markings	4-1
4-3	Sample Mobility Placard	4-4
4-4	1,500 LB Utility Crane	4-7
4-5	ACE Air Conditioner MC1A, Diesel	4-9
4-6	AF/M27M-1 Pumping Unit, Hydraulic, Diesel Driven	4-11
4-7	AF/M32T-1 Cabin Leakage Tester	4-13
4-8	Aircraft Oxygen Servicing Cart	4-15
4-9	A/M24T-8 Load Bank	4-17
4-10	A/M32A-60A Gas Turbine Generator	4-19
4-11	A/M32A-86 Generator, Diesel	4-21
4-12	A/M32A-95 Compressor, Gas Turbine, Trailer Mounted	4-23
4-13	A/M32C-10C/10D Air Conditioner Set	4-25
4-14	A/M32C-5 Air Conditioner Set	4-27
4-15	Auxiliary Ground Power Unit (AGPU)	4-29

LIST OF ILLUSTRATIONS - CONTINUED

Number	Title	Page
4-16	B-1/B-2 Air Conditioner, Trailer Mounted	4-31
4-17	B-4 Maintenance Stand	4-33
4-18	B-5 Maintenance Stand	4-35
4-19	B-2 Maintenance Stand	4-37
4-20	B-7/B-1 Maintenance Stand	4-39
4-21	B809A Generator Set	4-41
4-22	C-1 Maintenance Stand	4-43
4-23	Spraying Unit, Corrosion Control Wash Cart	4-45
4-24	Deleted	
4-25	EPU-6 Aircraft Power Supply	4-49
4-26	FDECU-3 Environmental Control Unit	4-51
4-27	Fuel Bowser 400 Gallon	4-53
4-28	H-1 Heater	4-55
4-29	HDU-13M Heater	4-57
4-30	Hydraulic Cart	4-59
4-31	Jack, Hydraulic 10 - 30 Ton	4-61
4-32	Jack, 35 Ton, Axle	4-63
4-33	Liquid Cooling Service (LCS) Cart	4-65
4-34	Liquid Oxygen Cart	4-67
4-35	LN2 Liquid Nitrogen Cart	4-69
4-36	MC-1A High Pack Air Compressor	4-71
4-37	MA-3D Air Conditioner	4-73
4-38	MC-2A Air Compressor	4-75
4-39	MC-7 Air Compressor	4-77
4-40	MD-1 Towbar	4-79
4-41	MEP Generators	4-81
4-42	MHU-83C/E Bomblift Truck	4-83
4-43	MJ-1B Bomblift Truck	4-85
4-44	Hydraulic Test Stand	4-87
4-45	Light Cart, FL-1D	4-89
4-46	NF-2D Light Cart, Diesel	4-91
4-47	Oil Cart	4-93
4-48	Purging Unit GSU-62M LOX Storage	4-95
4-49	Radome Dolly	4-97
4-50	Self-Generating Nitrogen Cart	4-99
4-51	Service Cart	4-101
4-52	Trielectron Generator	4-103
4-53	Universal Maintenance Stand	4-107
4-54	New Generation Heater	4-109
5-1	Angle Iron Sealant Application	5-2
7-1	SWA AOR	7-1
7-2	Sand/Dust Intrusion	7-1
7-3	Residue from Salts Caused by Condensation	7-1
7-4	Locally Manufactured Permeable Covers	7-2
7-5	Wire Bundle Sand/Dust Accumulation	7-2

LIST OF TABLES

Number	Title	Page
1-1	Galvanic Series of Metals and Alloys	1-3
1-2	Corrosion of Metals - Type of Attack and Appearance of Corrosion Products	1-14
2-1	Wash Interval Based on Corrosion Severity Zones	2-2
2-2	Authorized Cleaning Materials	2-10
2-3	Authorized HPW Equipment	2-18
3-1	Authorized Coating System	3-3
3-2	Pretreatment Instructions	3-10
3-3	Metalization Material Sources of Supply	3-14
4-1	Mobility Placard Construction Information	4-3
4-2	Mobility Placard Stencil Requirements	4-3
5-1	Hush House Coating Chart	5-3
A-1	Equipment and Consumable Materials List	A-1

FOREWORD

1. PURPOSE.

The purpose of this manual is to provide information necessary to prevent or minimize the impact of corrosion on Support Equipment (SE). This manual is designed to provide basic corrosion principal, theory, identification, prevention and control information to enable SE technicians to differentiate between the different types of corrosion in order to identify the appropriate temporary repair materials and processes. This technical order is specific to SE; however, for areas not covered in this manual, or expanded information on a particular material or process, technicians or contractors should refer to TO 1-1-691, "Aircraft Weapon Systems Cleaning and Corrosion Control". For additional guidance, refer to TO 1-1-8, "Application and Removal of Organic Coatings, Aerospace and Non-Aerospace Equipment", and TO 1-1-689, "Avionic Cleaning, and Corrosion Prevention/Control".

2. SCOPE.

This manual is designed to provide basic information to be used by Organizational/Unit, Intermediate, and Depot levels of maintenance. This manual shall also be used to provide guidance for corrosion prevention and control activities of contracted maintenance inspection, repair, and overhaul of SE. If conflicting instructions occur that pertain to the marking and painting of USAF SE, the end item manual takes precedence over this manual. Conflicts in resolving any conflicting materials and processes application requirements shall be referred to the Air Force Corrosion Prevention and Control Office, AFRL/RXSSR, Robins AFB, GA. Conflicts regarding all other criteria in this manual shall be referred to WR-ALC, Robins AFB, GA for resolution.

2.1 Chapter 1 Description. This chapter provides the basic information needed by SE technicians to accurately identify the causes, types of corrosion and how to minimize the factors that cause and accelerate corrosion. This chapter also provides procedures for the SE technicians to be able to treat corrosion in the early stages.

2.2 Chapter 2 Description. This chapter establishes the recommended SE wash cycles based on location; provides a listing and description of authorized cleaning compounds; and lists specific cleaning processes for SE.

2.3 Chapter 3 Description. This chapter provides the SE technician with the coating requirements authorized coating systems, sealing requirements, and corrosion preventive compound applications. It also provides the only authorized colors for USAF SE.

2.4 Chapter 4 Description. This chapter displays authorized markings and their locations on SE.

2.5 Chapter 5 Description. This chapter covers the materials and processes for construction and maintenance of Hush Houses.

2.6 Chapter 6 Description. This chapter covers the materials and processes for NSS.

2.6A Chapter 7 Description. This chapter covers operations unique to the Southwest Asia Region.

2.7 Appendix A Description. This appendix provides a list of consumable material authorized for use on SE.

3. ABBREVIATIONS AND ACRONYMS.

Abbreviations and acronyms used in this manual are in the accordance with ASME Y14.38.

Abbreviation	Definition
AISI	American Iron and Steel Institute
AFOSH	Air Force Office of Safety and Health
AFRL/RXSSR	Air Force Corrosion Prevention and Control Office
AOR	Area of Responsibility
BBE	Base Bioenvironmental Engineer
BOD	Biochemical Oxygen Demand
CPC	Corrosion Preventive Compound
CRES	Corrosion Resistant Steel
DO	Dissolved Oxygen
ESD	Electrostatic Discharge
HPW	High-Pressure Water
ID	Inside Diameter
MIG	Gas Metal-Arc
MSDS	Material Safety Data Sheet
MWAS	Metallization Process Metal Wire Arc Spray
NACE	National Association of Corrosion Engineers
NSN	National Stock Number
OD	Outside Diameter
OSHA	Occupational Safety and Health Administration
pH	Potential of Hydrogen
PSI	Pounds Per Square Inch
PSIG	Pounds Per Square Inch Gauge
PM	Preventive Maintenance
PPE	Personal Protective Equipment
QPL/QPD	Qualified Products List/Database
RH	Relative Humidity
RTV	Room Temperature Vulcanizing

Abbreviation	Definition
SCC	Stress corrosion cracking
SE	Support Equipment
SSDC	Steel Structure Painting Council
SWA	Southwest Asia
TIG	Gas Tungsten Arc
TDS	Total Dissolved Solids
VOC	Volatile Organic Compound

4. LIST OF RELATED PUBLICATIONS.

Below is a list of publications referenced in this manual.

Number	Title
TO 00-25-234	General Shop Practice Requirement for the Repair, Maintenance and Test of Electrical Equipment
TO 00-35D-54	USAF Materiel Deficiency Reporting and Investigating System
TO 00-5-1	Air Force Technical Order Systems
TO 1-1-3	Inspection and Repair of Aircraft Integral Tanks and Fuel Cells
TO 1-1-691	Aircraft Weapons Systems - Cleaning and Corrosion Control
TO 1-1-8	Application and Removal of Organic Coatings, Aerospace and Non-Aerospace Equipment
TO 35C2-3-1-426WC-4-20-1	Periodic Inspection Work Cards - Diesel Engine Driven Generator Sets A/M32A-86 Series
TO 36-1-191	Technical and Managerial Reference for Motor Vehicle Maintenance
TO 42B-1-23	Management of Recoverable and Waste Liquid Petroleum Products

5. RECOMMENDATIONS FOR CHANGES.

Recommendations for changes shall be submitted on AFTO Form 22 in accordance with TO 00-5-1.

SAFETY SUMMARY

1. GENERAL SAFETY INSTRUCTIONS.

The safety precautions in AFOSH Standard 91-66, AFOSH Standard 91-100 and OSHA Standard 1910.107 are applicable to the operation of paint shops and spray-painting equipment and shall be followed during cleaning and repainting of SE.

2. WARNING AND CAUTION STATEMENTS.

These statements have been strategically placed throughout this text prior to operating or maintenance procedures, practices or conditions considered essential to the protection of personnel (WARNING) or equipment and property (CAUTION). A WARNING and CAUTION will apply each time the related step is repeated. Prior to starting any task, the WARNINGS or CAUTIONS included in the text for the task will be reviewed and understood.

3. DEFINITIONS.

The following definitions apply to WARNINGS and CAUTIONS found throughout this publication.

WARNING

Highlights an operation or maintenance procedure, practice, statement, etc., which, if not strictly observed, could result in injury, long term health hazard or death to personnel.

CAUTION

Highlights an operation or maintenance procedure, practice, statement, etc., which, if not strictly observed, could result in damage or destruction to equipment or loss of mission effectiveness.

NOTE

Highlights an essential operating or maintenance procedure, condition or statement.

4. MATERIALS HANDLING.

4.1 Personnel Hazards. Many of the materials and procedures outlined in this technical order are potentially hazardous to personnel, if used improperly. When using chemicals such as paint strippers, cleaning compounds, conversion coatings, and solvents, follow the correct procedures and wear appropriate protective gear to prevent injury to personnel. Read the appropriate Material Safety Data Sheet (MSDS), manufacturer's instructions and be familiar with related warnings and cautions in this technical order prior to using any material. Misuse of certain materials can also damage parts or cause corrosion. Refer to DOD 6050.5-LR, Hazardous Material Information System, FED STD 313, Material Safety Data, Transportation Data, and Disposal Data for Hazardous Material Furnished to Government Activities, or the appropriate systems command documents for the handling, storage, and disposal of hazardous materials. When in doubt, contact the local safety office, base bioenvironmental office, or regional medical center for guidance.

4.2 Environmental Hazards. Many of the materials and procedures outlined in this technical order are also potentially hazardous to the environment. Wherever possible, methods for preventing pollution, minimizing waste, and using less toxic materials are given. Consult the base bioenvironmental office for information about the handling, storage, and disposal of hazardous waste.

5. GENERAL PRECAUTIONS.

The following general safety precautions are not related to any specific procedure and therefore do not appear elsewhere in this technical manual. These are general safety precautions and instructions people must understand and apply during many phases of operation and maintenance to ensure personal safety and health and the protection of Air Force property.

5.1 Live Circuits. Operating personnel must observe all safety requirements at all times. Do not replace components or make adjustments inside equipment with the electrical supply turned on. Under certain conditions, danger may exist even when the power control is in the off position due to charges retained by capacitors. To avoid injuries, always remove power, discharge, and ground a circuit before touching it. Adhere to all lock out/tag out requirements.

5.2 Resuscitation. Personnel working with or near dangerous voltage shall be trained in modern methods of resuscitation. Information and training sources may be obtained from the Director of Base Medical Services.

5.3 Finger Rings/Jewelry. Finger rings have caused many serious injuries. Remove rings, watches and other metallic objects that may cause shock or burn hazards. Unless specifically allowed by shop safety procedures, remove finger rings during all maintenance activity.

5.4 Compressed Air. Use of compressed air can create an environment of propelled particles. Do not direct air streams

towards yourself or other personnel. Air pressure shall be reduced to less than 30 PSIG and used with effective chip guarding and personal protective equipment.

5.5 DANGEROUS PRESSURES. Care must be taken during testing to ensure that all test connections are proper and tight. All system components must be compatible with applied pressure. Personnel must be protected by a safety shield or located at a distance sufficient to prevent injury.

6. PERSONAL PROTECTIVE EQUIPMENT (PPE).

If unique local conditions make compliance with the protective clothing or other occupational health requirements specified in this manual unnecessary or impractical, obtain an evaluation of the operation from the Bioenvironmental Engineer. The Bioenvironmental Engineer or Base Safety Office will determine the required precautions and approved PPE.

7. CLEANERS/CHEMICALS/PAINTS/PRIMERS.

Some cleaners, chemicals, paints, and primers have adverse effects on skin, eyes, and the respiratory tract. Observe manufacturer's warning labels, Material Safety Data Sheet (MSDS) and other instructions for proper handling, storage, and disposal; and current safety directives. Use only in authorized areas.

8. ELECTROSTATIC DISCHARGE (ESD).

Certain circuit card assemblies and their components will be damaged by seemingly undetectable electrostatic discharge. Care must be exercised during handling/repair of those items. Use Electrostatic Discharge (ESD) precautionary procedures outlined in TO 00-25-234, General Shop Practice Requirements for Repair, Maintenance and Test of Electrical Equipment, and MIL-HDBK-263, Electrostatic Discharge Control Handbook for Protection of Electrical and Electronic Parts, Assemblies and Equipment.

CHAPTER 1
CORROSION THEORY, IDENTIFICATION, CAUSES AND EFFECTS

1.1 PURPOSE.

The purpose of this chapter is to provide SE maintenance personnel with the basic knowledge necessary to understand the causes of corrosion, identify the different types of corrosion that will in-turn help minimize corrosion damage through prevention and early detection and treatment. To help prevent corrosion, SE technicians must first need to understand corrosion causes and effects and be able to recognize there are several types of corrosion with different preventive measures. This chapter is an introduction to corrosion theory, the causes of corrosion and the factors that influence its development. The various forms of corrosion and the effect of corrosive environments normally on SE are also described in this chapter.

1.2 DEFINITION OF CORROSION.

Corrosion is the electrochemical deterioration of a metal because of its chemical reaction with the surrounding environment. This reaction occurs because of the tendency of metals to return to their naturally occurring states, usually oxide or sulfide ores. For example, iron in the presence of moisture and air will return to its natural state, iron oxide or rust. Aluminum and magnesium form corrosion products that are white oxides or hydroxides. When corrosion occurs, water is usually present in some form (e.g., humidity, moisture, condensation, rain, salt spray, etc.), acting as an electrolyte and reacting chemically with metal surfaces.

1.3 CHEMICAL DEFINITIONS.

1.3.1 Atom. The smallest unit of an element. There are more than 100 elements, including metals (such as aluminum, magnesium, iron, nickel, titanium, cadmium, chromium, copper, and carbon) and non-metals (such as hydrogen, oxygen, sulfur, and chlorine).

1.3.2 Electron. A negatively charged particle much smaller than an atom. An electrical current occurs when electrons are forced to move through metal conductors. Electrons also flow through water solutions, but only in the presence of ions.

1.3.3 Ions. Atoms or groups of atoms bound together that is either positively or negatively charged. An electrical current occurs when ions are forced to move through water solutions. Ions cannot move through metal conductors.

1.3.4 Electrolyte. A liquid solution (usually water) containing ions. Salt water is an electrolyte, an aqueous (i.e., water) solution of sodium ions and chloride ions.

1.4 THEORY OF CORROSION.

A corrosion cell is much like a battery. When a metal corrodes, the metal atoms lose electrons and become metal ions in an electrolyte solution. The positively charged metal ions can combine with negatively charged ions to form corrosion products, such as metallic chlorides, oxides, hydroxides, and sulfides. Four conditions must exist before this type of corrosion can occur.

1.4.1 Anode. A metal must be present that has a tendency to corrode. The corroding metal is known as the anode.

1.4.2 Cathode. A dissimilar conductive material (the cathode) that has less of a tendency to corrode than the anode must be present. Examples include a different metal, a protected part of the same metal, or conductive plastics/composite.

1.4.3 Electrolyte. A conductive liquid (electrolyte) must connect the anode and cathode so that ions can carry electrical current between them.

1.4.4 Electrical Path. Electrical contact between the anode and cathode (usually in the form of metal-to-metal contact) must exist so that electrons can move from the anode, where they are released, to the cathode. Eliminating any one of these four conditions, illustrated in Figure 1-1, will stop corrosion. For example, a paint film on a metal surface will prevent the conducting liquid (electrolyte) from connecting the anode and cathode, thereby stopping the electric current. Another example is when two connected dissimilar metal parts placed in pure water corrode very slowly because of the lack of ions to conduct the electric current. In seawater, the corrosion reaction is accelerated by a factor of 1,000 or more.

1.5 DEVELOPMENT OF CORROSION.

1.5.1 Corrosion Origination Locations. All corrosive attacks begin on the surface of metals whether it is the inside of a bolt hole, border of a metal crystal, hand rail interior or bottom of a frame. If allowed to progress, corrosion can penetrate into and through the metal. When corrosion products form, they often precipitate onto the corroding surface as a powdery or scaled deposit. Other evidence of corrosion is the bulging/blistering of the metal surfaces. Thin film corrosion forms on electrical contact points and pins may appear as a tarnish, or powdery deposit on the metal surface.

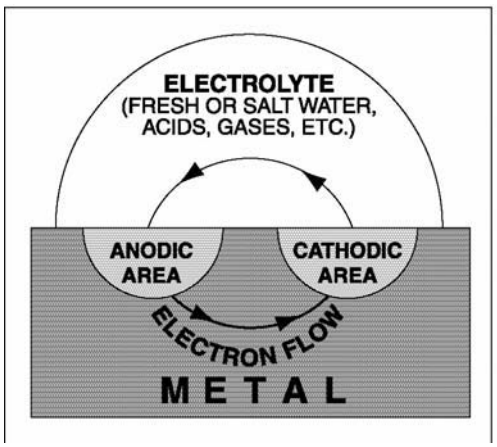

Figure 1-1. Diagram of a Simplified Corrosion Cell and an Example of Raised Corrosion Product

1.5.2 Corrosion Under Painted Surfaces. Paint coatings can mask the initial stages of corrosion. Because corrosion products occupy more volume than the original metal, frequently inspect paint surfaces for irregularities such as blisters, flakes, chips, and lumps.

1.6 FACTORS INFLUENCING CORROSION.

Both natural and man-made environments cause corrosion of SE. Natural conditions that affect the corrosion process are moisture, temperature, salt atmospheres, ozone, sand, dust, solar radiation, insects and birds, and microorganisms. Man-made conditions that affect the corrosion process are industrial pollution, manufacturing operations, storage conditions, and shipment. By understanding these conditions, maintenance personnel will be better able to prevent SE damage. Factors that influence metal corrosion and the rate at which it occurs are outlined in Table 1-1.

1.6.1 Type of Metal. The metals most commonly used in SE construction are aluminum, steel, and to some extent magnesium. Cadmium, nickel, chromium, and silver are sometimes used as protective plating. Metals have a wide range of corrosion resistance. The most active metals (i.e., those that tend to lose electrons easily), such as magnesium and aluminum, corrode easily and are listed at the top of Table 1-1. The most noble metals (i.e., those that do not lose electrons easily), such as gold and silver, do not corrode easily and are listed at the bottom of Table 1-1.

1.6.2 Dissimilar Metal Coupling (Galvanic Corrosion). When two dissimilar metals make electrical contact in the presence of an electrolyte, the rate at which corrosion occurs depends on the difference in their location on the galvanic scale (see Table 1-1). The greater the distance between the metals, the faster corrosion occurs. For example, magnesium corrodes very quickly when coupled with gold in a humid atmosphere. However, pure aluminum corrodes very slowly, if at all, when in contact with cadmium. It is essential in the repair of SE that compatible metals and metal fasteners, washers, etc., be selected for repair and refurbishment processes. If dissimilar metal coupling must occur due to the equipment design or configuration, contact the appropriate system equipment specialist for the appropriate processes and materials to insulate the incompatible metals.

1.6.2.1 Graphite or carbon fiber composites are materials which consist of reinforcing fibers in a matrix made of organic resin, usually epoxy. They are an important class of SE construction materials because of their high strength-to-weight ratios and high stiffness. Although graphite or carbon/carbon composites appear as a plastic, the graphite material is considered a metal. Care should be exercised when attaching fasteners through the fibers. Use the appropriate sealant to insulate the composite from the metal parts.

1.6.2.2 Since carbon is the least active metal in the galvanic series, it will accelerate the corrosion of any metal to which it is coupled. Insulation, with sealant or other nonconductive coatings, between graphite or carbon epoxy composites and other metals surfaces or fasteners is necessary to prevent dissimilar metal attack on the attached part.

Table 1-1. Galvanic Series of Metals and Alloys

ANODIC (HIGH CORROSION POTENTIAL)
MAGNESIUM ALLOYS
ZINC (PLATE)
BERYLLIUM
BERYLLIUM (PLATE)
URANIUM (DEPLETED)
ALUMINUM ALLOYS
INDIUM
TIN (PLATE)
STAINLESS STEEL 430 (ACTIVE)
LEAD
1010 STEEL
CAST IRON
STAINLESS STEEL 410 (ACTIVE)
COPPER (PLATE)
NICKEL (PLATE)
AM 350 (ACTIVE)
CHRONIUM (PLATE)
STAINLESS STEELS 350, 310, 301, 304 (ACTIVE)
STAINLESS STEELS 430, 410 (PASSIVE)
STAINLESS STEELS 13-8, 17-7 pH (ACTIVE)
BRASS, YELLOW, NAVAL
STAINLESS STEEL 316L (ACTIVE)
BRONZE 220
COPPER
STAINLESS STEEL 347 (ACTIVE)
COPPER-NICKEL 715
STAINLESS STEEL 202 (ACTIVE)
MONEL 400
STAINLESS STEEL 201 (ACTIVE)
STAINLESS STEEL 321, 316 (ACTIVE)
STAINLESS STEEL 309, 13-8,17-7 pH (PASSIVE)
STAINLESS STEEL 304, 301, 321 (PASSIVE)
STAINLESS STEEL 201, 316L (PASSIVE)
STAINLESS STEEL 286 (ACTIVE)
AM355 (ACTIVE)
STAINLESS STEEL 202 (PASSIVE)
CARPENTER 20 (PASSIVE)
AM355 (PASSIVE)
TITANIUM ALLOYS
SILVER
PALLADIUM
GOLD
RHODIUM
PLATINUM
CARBON/GRAPHITE
CATHODIC (LOW CORROSION POTENTIAL)

1.6.3 Anode and Cathode Surface Area. The rate of galvanic corrosion also depends on the size of the parts in contact. If the surface area of the corroding metal (the anode) is smaller than the surface area of the less active metal (the cathode), corrosion will be rapid and severe. However, if the corroding metal is larger than the less active metal, corrosion will be slow and superficial. For example, an aluminum fastener in contact with a relatively nonreactive Monel structure may corrode severely, while a Monel bracket secured to a large aluminum member would result in a relatively superficial attack on the aluminum.

1.6.4 Climate. Warm, moist air, typically found in tropical climates, tends to accelerate corrosion because of the higher concentration of water vapor in the air. Additionally, high temperature environments tend to produce more rapid corrosion because of accelerated chemical reactions. Conversely, cold dry air, typically found in colder regions of the world, tends to slow corrosion rates due to less water vapor in the air. Corrosion does not occur in very dry conditions. For this reason, desiccants or dehumidification systems are placed in, or connected to shipping or storage containers to create very dry local environments. The equipment’s proposed operational environments and established corrosion prevention and control optimal design parameters should be considered in SE design and procurement.

1.6.4.1 Desert. Hot, wind-swept deserts create a severe maintenance problem because powdery dust can penetrate even supposedly sealed components. Typically, desert conditions are thought to have low humidity and rainfall. However, there are areas of the world considered as desert with high daytime temperatures, moderate to low night time temperatures, high humidity (in areas such as the Persian Gulf), ultraviolet radiation, and fine dust. These conditions pose the most serious, destructive elements of the desert climate due to the wide range of conditions experienced daily.

1.6.4.2 Temperate Zones. The temperate or intermediate climate zone encompasses most of the North American and European continents. These areas at various times of the year may approximate the extremes of polar, desert, or tropical temperatures and humidity. The temperate zone temperatures range from -25 °F to +59 °F (-32 °C to +15 °C) in the winter and from +59 °F to +125 °F (+15 °C to +52 °C) in the summer. The relative humidity (RH) also fluctuates between five and 100%. The most critical areas are coastal locations, during the warm periods of the year in which the relative humidity approaches 100% RH at night and the air has high concentrations of salt. Moisture from this salt laden air can condense on equipment during early evening and morning hours, thereby causing serious corrosion. Because of its relatively mild temperatures, the temperate zone is also the most heavily populated. Consequently the smoke, smog, ozone, and corrosive fumes associated with heavy industry are also found there.

1.6.4.3 Tropics. One of the greatest challenges to SE manufacturing industries is to the design equipment that is protected from corrosion and deterioration in the continual heat and humidity of tropical climates. Even though they encompass only a small portion of the earth's land area, the tropics demand the greatest amount of consideration from the standpoint of corrosion treatment and control. Relative humidity of up to 100% RH at ambient air temperatures of 85 °F (29 °C) and above create a formidable threat of corrosion. When high humidity and temperature conditions are combined with salt-laden air, the corrosive environment becomes extremely severe. The critical combination of high temperatures, condensation, high relative humidity, and contaminants such as salt and sand may cause premature structural failure of equipment due to corrosion. Deterioration of the materials used in electronic equipment may also be accelerated. Thin film corrosion on electrical contact points and pins act as insulators to electrical current adversely affecting the operations of SE.

1.6.4.3.1 Factors of Influence in Tropical Environments. Tropical environments are noted for long periods of heavy rainfall, during which 100 inches or more of rain may fall. Extended periods of high heat and humidity contribute to rapid corrosion of metals, cracking and flaking of rubber and plastic materials, and deterioration of seals. Equipment, whether stored or in use, requires special protective containers/measures and frequent preventive maintenance. Microorganisms multiply excessively in tropical environments and attack many non-metallic materials. Many items become covered with fungi in a matter of hours. Electronic equipment requires special efforts for effective operation in the tropics. Intensive preventive maintenance and the best possible protective techniques are necessary for SE and their components in tropical environments.

1.6.5 Heat Treatment and Grain Direction. When heat-treated, heavy sections of metals do not cool uniformly because the metallic grain/crystalline structures tend to vary in chemical composition from one part of the metal to another. This can cause galvanic corrosion if the metal crystals are more active than another or contain contaminates. Alloys that are fabricated by rolling, extruding, forging, or pressing have properties that depend highly on the metal grain/crystal direction (parallel to grain elongation vs. cross grain). For example, exposed end grain corrodes much more easily than flattened elongated surfaces in sheet stock. This explains why exfoliation occurs at the structural edges or next to countersunk fasteners on certain types of alloys.

1.6.6 Electrolytes. Electrically conducting solutions are easily formed on metallic surfaces when condensation, salt spray, rain, or rinse water accumulate. Dirt, salt, and carbon deposits from engine exhaust and engine exhaust gases can combine with water on wet surfaces thereby increasing the electrical conductivity of the electrolyte and the rate of corro-

sion. Improper dilution of cleaning chemicals, combining cleaning compounds together, or the use of unauthorized cleaning material can cause the cleaning solution to become an electrolyte.

1.6.6.1 Moisture is present in air as a gas (water vapor) or as finely divided droplets of liquid (mist or fog) and often contains contaminants (such as chlorides, sulfates, and nitrates) that increase its corrosive effects. Moisture will enter all areas of SE that air can enter. All enclosed areas, that are not hermetically sealed, will allow air to enter and leave as the difference in pressure between the inside and outside the equipment changes. These pressure differences occur when atmospheric pressure changes and when the air temperature inside an enclosed area changes. As the surrounding surfaces are heated, moisture-laden air is drawn into the enclosed area or absorbed in open cell foam. As the air around the equipment cool, moisture will condense in the enclosed areas and settle in the lowest area of the part. The enclosed areas are often hidden and/or inaccessible. Moisture is difficult to remove and the subsequent corrosion may be difficult to identify in the early stages.

1.6.6.2 Salt laden atmospheres pose a continual problem in locations operating near coastal environments. When dissolved in water, salt solutions form very effective electrolytes. The ocean, which is 3.5% to 3.9% salt, is the world's primary source of salt. Normal sea winds carry from 10 to 100 lbs of sea salt per cubic mile of air. Bases located close to marine environments are continually exposed to the salt laden atmosphere. Because dissolved salts are strong electrolytes, it is easy to understand why coastal environments are listed in the moderate to severe corrosion prone categories and require frequent rinsing and cleaning to remove the salt deposits.

1.6.6.3 Condensed moisture will usually evaporate as the surrounding air warms but will leave behind its contaminants (residues), including salts. This can result in the build-up of soils and salt contamination. Salt-laden condensation may collect at the lowest surface of the equipment. The lowest surfaces are usually the last to dry. As the condensation continues to collect at the lowest surfaces the contaminates/ electrolytes become more concentrated. Condensed moisture and its contaminants can also be trapped in close fitting, wettable joints, such as faying surfaces. Some gasket and packing materials will absorb several times their weight in water and, when heated, can transmit this retained moisture into the sealed area. Moisture can accumulate in such areas through successive cycles of warming and cooling and cause corrosion on the interior of the part resulting in premature structural failure as shown in Figure 1-2.

1.6.6.4 Open cell foam, see Figure 1-3, is a sponge-like material used mainly for sound suppression and insulation. Humidity, condensation, rainfall, etc., is absorbed into the foam and ultimately migrates to the mating metal surface to which it is attached. The absorbed moisture is very slow in drying out and provides the moisture/electrolyte against the metal surfaces. When possible, open cell foam should not be used. Closed cell types of foam may be suitable substitutes for this material and will not absorb moisture. If open cell foam is the only material suitable for your needs, prior to installation in the SE, seal all open cell surfaces and sides of any perforations in the foam with a polysulfide type sealant such as MIL-PRF-81733. Sealing any tears in the foam or any unsealed sides and edges of the foam will preclude any fluid absorption by the foam.

TO-35-1-3-001

Figure 1-2. Corrosion Accelerated by Condensed Moisture

Figure 1-3. Open Cell Foam and Resulting Corrosion

1.6.6.5 Airborne industrial pollutants also contribute to the deterioration of nonmetallic materials and severe corrosion of metals. The most aggressive are: carbon (from internal combustion engine exhaust), nitrates (from agricultural fertilizers), ozone (from electrical motors and welding operations), sulfur dioxide (from engine exhaust and industrial and ship smoke stacks), and sulfates (from automobile exhaust).

1.6.6.6 Sand, dust, and volcanic ash are present in many areas, but particularly in industrial areas where they often contain a number of tar products, ashes, and soot. Dust is also found in tropical zones with plentiful rainfall and arid zones where there is little or no rainfall. Sand and dust are extreme problems in deserts because the wind carries dry, powdery sand and dust. During sandstorms, sand and dust can penetrate sealed equipment and many internal areas of SE. Sand, dust, and volcanic ash are hygroscopic and can absorb and hold moisture when present on internal or external surfaces of SE or electronic parts. Dust from volcanic areas contains chlorides and sulfates, dust from desert areas may contain chlorides, carbonates, and sulfates. These materials are extremely corrosive in the presence of moisture. Although small amounts of sand or dust may be unnoticed by operating personnel, they may be sufficient to initiate and accelerate corrosion.

1.6.7 Microbial Induced/Influenced Corrosion. Although rarely seen on SE, microbial induced/influenced corrosion, as the term is used in this manual, includes the aggressive action of bacteria, fungi, or molds that can be found on SE. Microorganisms are nearly everywhere and outnumber all other types of living organisms. Those organisms causing the greatest corrosion problems are bacteria and fungi. Damage resulting from microbial growth can result from: (1) the tendency of the growth to hold moisture which then causes corrosion; (2) digestion of the substrate as food for the microorganism; or (3) corrosion of the surface beneath the growth by secreted corrosive fluids of the action of bacteria, fungi, or molds on a metal surface, see Figure 1-4.

1.6.7.1 Bacteria may be either aerobic or anaerobic. Aerobic bacteria require oxygen to live. They can accelerate corrosion by oxidizing sulfur to produce sulfuric acid or by oxidizing ammonia to produce nitric acid. Bacteria living adjacent to metals may promote corrosion by depleting the oxygen supply or by releasing metabolic products. Anaerobic bacteria, on the other hand, can survive only when free oxygen is not present. The metabolism of these bacteria requires them to obtain food sources by oxidizing inorganic compounds such as iron, sulfur, hydrogen, and carbon monoxide. The resultant chemical reactions cause corrosion.

1.6.7.2 Microbial attack can be prevented by frequent and thorough cleaning of the affected areas and applying moisture-proofing coatings to nutrient materials or by drying the interiors of compartments with desiccants. However, some moisture-proofing coatings are attacked by microorganisms, especially if they are used on contaminated surfaces.

Figure 1-4. View of the Results of Microbial Induced Corrosion

1.6.7.3 When dry, some microorganisms can survive in spore form for long periods and can become active when moisture is available. When desiccants become saturated and unable to absorb the moisture passing into the affected area, microorganisms can begin to grow. Dirt, dust, and other airborne contaminants are the least recognized contributors to microbial attack. Unnoticed, small amounts of airborne debris may be sufficient to promote fungal growth.

1.6.8 Mechanical Stress. Manufacturing processes such as machining, forming, welding, or heat treatment can leave stresses in SE parts. Almost all alloys in SE construction are sensitive to a form of corrosion known as stress corrosion cracking. This residual stress causes corrosion to proceed more rapidly in structurally important regions of the part until failure occurs.

1.6.9 Time. As time goes on, metals naturally tend to corrode. In some cases, the corrosion process occurs at the same rate, no matter how long the metal has been exposed to the environment. In other cases, corrosion can decrease with time (because of the barrier formed by corrosion products) or increase (if a barrier to corrosion is being broken down).

1.6.10 Manufacturing. During the manufacture, assembly, or repair of SE, many factors can cause the introduction of corrosion. Use of unsuitable materials and improper materials processing can cause corrosion. Shearing or hole-punching operations on some metal alloys, especially on high-strength aluminum, may create stresses that will lead to corrosion or provide a slight lip to inhibit complete drainage from an area. Raised edges of the hole-punching operations may cause incomplete drainage of electrolytes once the panels are installed. Assembly of parts in areas contaminated by fumes or vapors from adjacent operations may entrap fumes in the equipment, which might lead to future corrosion. Areas without humidity control may be sources of condensed moisture. Inadequate or nonexistent sealant usage, improper material selection, use of open cell foam for sound suppression are other causes that contribute to premature structural failure of SE.

1.6.11 Storage. Even traces of corrosive vapor in packages containing SE parts may result in serious corrosion. Moreover, the natural "breathing" of packages may introduce moisture into parts and equipment. Decomposed packing materials can emit corrosive vapors during prolonged storage, which can create serious corrosion of equipment and the parts stored in these packages.

1.6.12 Degradation of Non-metals. Nonmetallic materials (plastics, elastomers, paints, and adhesives) are not subject to electrochemical corrosion because ions are not easily formed from nonmetallic elements and the electrical conductivity of non-metals is extremely low. The degradation of non-metals depends on the chemical make-up of the material and the nature of the environment. In general, nonmetallic materials used on equipment are selected for their performance properties (flexibility, transparency, strength, electrical resistance, etc.) and their resistance to heat, impact, abrasion, ultraviolet radiation, moisture, ozone and other detrimental gases, and operational fluids (such as hydraulic fluid, lube oil, cleaners, deicing fluids, etc.). However, the use of unauthorized maintenance chemicals and procedures can accelerate degradation and ultimately lead to material failure resulting in leakage, corrosion, electrical shorts, crazing, and/or mechanical failure.

1.6.13 Preventive Maintenance (PM). PM is probably one of the easiest, most effective, and least expensive means of preventing corrosion and is the process organization maintenance personnel can control. Each type of corrosion has its own peculiarities and will require special treatment. However, there is a common four point approach in developing an effective corrosion prevention and control program. The four point approach consists of (1) the early identification of corrosion, (2) the early and thorough removal of corrosion and proper treatment of the corroded area (3) the complete removal of electrolytes through frequent cleaning with approved, properly mixed cleaning compounds, (4) and the application and maintenance upkeep of effective protective coatings.

1.6.13.1 Corrosion can be minimized by frequent washing because the extent of corrosion depends on the length of time electrolytes are in contact with metals. If Qualified Product List/Database (QPL/QPD) approved cleaners and additives are used, frequently cleaning of equipment based or operating in a corrosive environment will reduce the likelihood and severity of corrosion.

1.6.13.2 Keeping chemical treatments and paint finishes in good condition will minimize corrosion. The degradation of nonmetallic materials can be minimized by avoiding the use of unauthorized maintenance chemicals, coatings, and procedures.

1.6.13.3 Dedication to proper preventive maintenance practices will maximize equipment reliability and availability.

1.6.13.4 A typical PM program should include personnel trained in corrosion identification, prevention, thorough corrosion removal, chemical treatment, paint removal, sealing, and repainting. An effective PM program also includes:

a. Proper SE washing and cleaning cycle based on the corrosion severity zone the equipment operates in.

b. Daily cleaning or wiping down of all exposed unpainted surfaces such as actuating rods of hydraulic cylinders.

c. Keeping all drains and drain holes open, and low parts of the SE dry and free of salt deposits.

d. Initial use, inspection, and reapplication of the appropriate CPCs following SE washing, repairs, and component replacement.

e. Early detection and thorough removal of corrosion and replacement of the damaged protective coatings and sealants.

f. Sealing gaps, seams, and holes to prevent moisture entry. This is especially important around spot-welded areas.

g. Application/reapplication of sealants, where required, to insulated dissimilar metals or prevent water intrusion following SE repairs, and component replacements.

h. Technician awareness of the importance of corrosion prevention during regular maintenance activities (while performing daily repairs and maintenance tasks, always look for signs of corrosion or corrosion damage).

i. Track causes of initial corrosion to the source and eliminate the source.

1.7 TYPES OF CORROSION.

Corrosion is cataloged and classified in many ways. Occasionally, different names are used for the same type of corrosion. Common types of corrosion are described below.

1.7.1 Uniform Etch Corrosion. Uniform etch corrosion results from a direct chemical attack on a metal surface and involves only the metal surface. On a polished surface, this type of corrosion is first seen as a general dulling or etching of the surface, and, if the attack continues, the surface becomes rough and possibly frosted in appearance. This type of corrosion appears uniform because the anodes and cathodes are very small and constantly shift from one area of the surface to another. An example is the etching of metals by acids or by the use of unapproved or improperly mixed cleaning compounds (see Figure 1-5). The discoloration or general dulling of metal created by exposure to elevated temperatures is not considered to be uniform etch corrosion.

1.7.2 Galvanic Corrosion. Galvanic corrosion (see Figure 1-6) occurs when different metals are in contact with each other and an electrolyte (such as salt water). It is usually recognizable by a buildup of corrosion at the joint between the metals. If two dissimilar metals that are widely separated in Table 1-1 are in direct electrical contact, galvanic corrosion is probably occurring. The less corrosion-resistant metal (the higher metal in Table 1-1) becomes the anode and the more corrosion-resistant metal (the lower metal in Table 1-1) becomes the cathode. As stated earlier, the anode will corrode. The farther apart the metals are in Table 1-1, the more severe will be the corrosion of the anodic metal if the metals are joined electrically and placed in an electrolyte. In most cases, the galvanic series listed in Table 1-1 is a good predictor of how metals will corrode in a galvanic couple. A major factor in galvanic corrosion is the size of the anode and cathode. A small anode in contact with a large cathode will corrode much more severely than a large anode in contact with a small cathode.

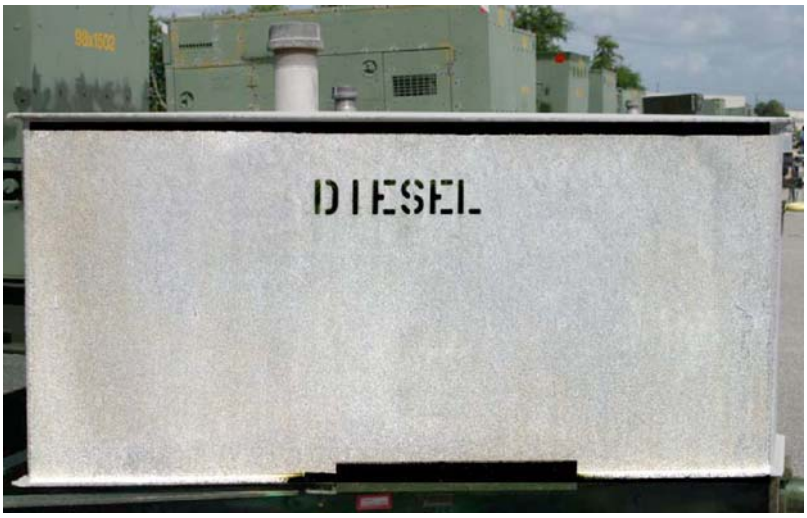

Figure 1-5. Example of Uniform Etch

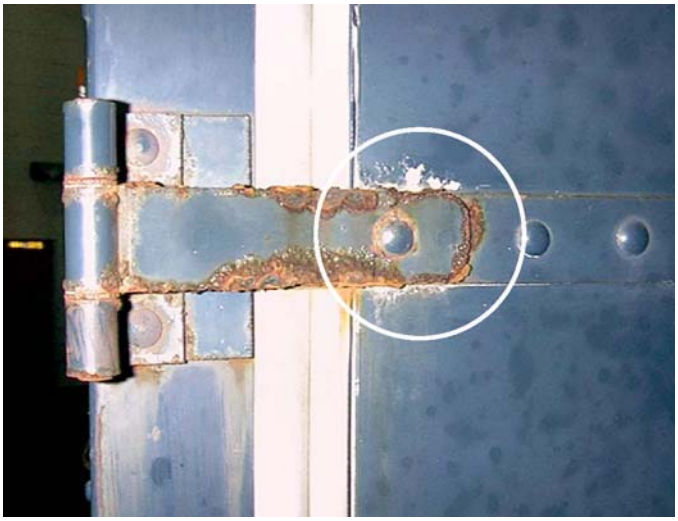

Figure 1-6. Example of Galvanic Corrosion - Steel Hinge Bolted to an Aluminum Door

1.7.3 Pitting Corrosion. The most common corrosion on aluminum and magnesium alloys is called pitting corrosion (see Figure 1-7). It is first noticeable as a white or gray powdery deposit, similar to dust, that blotches the surface. When the deposits are cleaned away, tiny pits or holes can be seen in the surface. Pitting corrosion may also occur in other types of alloys. The combination of small active anodes to large passive cathodes causes severe pitting. Pitting starts as an advanced form of uniform etch. It can worsen into very severe corrosion that results in localized and relatively deep holes in the metal. Pits are isolated holes that can vary in shape and size and usually take several months to a year before they become visible. Pitting is an extremely destructive and insidious form of corrosion. It causes equipment to fail because of perforation with very little weight or material loss on the entire structure. It is also difficult to detect because the pits are often covered with corrosion products. Pitting usually initiates at anodic points on a metal surface such as breaks in protective coatings or films, scratches, and irregularities that are exposed to an aggressive electrolyte. Even though a pit is slow to initiate, once started, it will progress at an ever-increasing rate and will tend to undercut the surface as it grows.

1.7.4 Intergranular Corrosion. Intergranular corrosion (see Figure 1-8) is an attack on the grain boundaries of the metal. A highly magnified cross-section of any commercial alloy shows the granular structure of the metal. This consists of quantities of individual grains, each having a clearly defined boundary that chemically differ from the metal within the grain. The grain boundaries are frequently anodic (i.e., tend to corrode more easily) to the metal within the grain. When in contact with an electrolyte, rapid corrosion occurs at the grain boundaries.

Figure 1-7. Example of Pitting Corrosion

1.7.5 Exfoliation Corrosion. Exfoliation corrosion (see Figure 1-9) is an advanced form of intergranular corrosion and occurs when the surface grains of a metal are lifted up by the force of expanding corrosion products occurring at the metal grain boundaries. The lifting up or swelling is visible evidence of exfoliation corrosion. Exfoliation occurs on extruded, rolled, wrought, and forged high strength aluminum and magnesium parts.

1.7.6 Concentration/Crevice Corrosion. Crevice corrosion (see Figure 1-10 and Figure 1-11) occurs when the electrolyte in a crevice has a different concentration than the area adjacent to the crevice. This type of corrosion is also known as concentration cell corrosion. Electrolyte inside the crevice contains less oxygen and more metal ions than electrolyte just outside the crevice. As a result, the metal surfaces have different activities, even though they may be part of the same metal, and corrosion occurs inside the crevice. This form of corrosion often occurs between faying surfaces or when a surface is covered by a foreign material (such as dirt) or under gaskets, rubber, or plastic tape. The mechanisms involved in crevice corrosion are very similar to pitting corrosion. Crevice corrosion most often occurs where there are stagnant solutions (electrolytes) in holes, gasket surfaces, lap joints, under surface deposits (sand, dirt, corrosion products, etc.), and in crevices under bolt and rivet heads. To become a site for corrosion, a crevice must be wide enough to allow liquid entry but narrow enough to keep the liquid stagnant. As with pitting, crevice corrosion is slow to start, but once started, progresses at ever increasing rates (due to various electrochemical factors). Crevice corrosion is also most intense in solutions containing chlorides (saltwater). Metals susceptible to pitting (stainless steel, aluminum, magnesium) are also susceptible to crevice corrosion. However, not all metals that are susceptible to crevice corrosion will be susceptible to pitting. Three general types of crevice corrosion are: Metal ion concentration cells, Oxygen concentration cells, Active-passive cells.

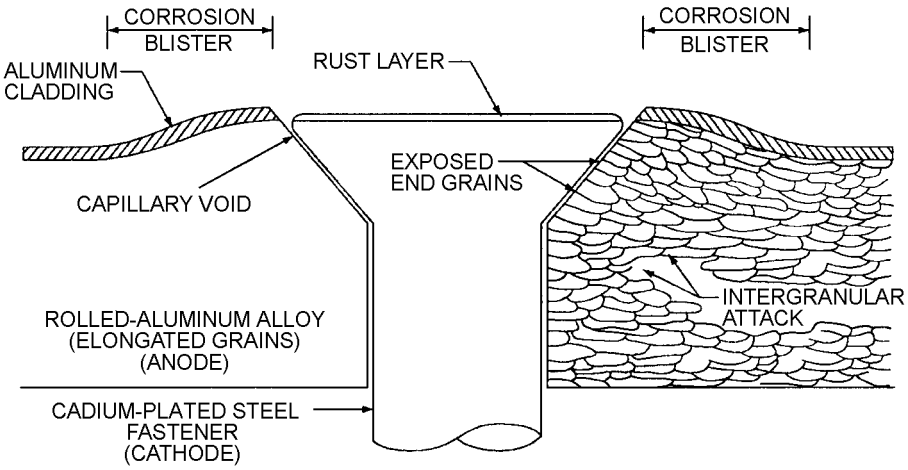

Figure 1-8. Illustration of an Intergranular Corrosion Cell

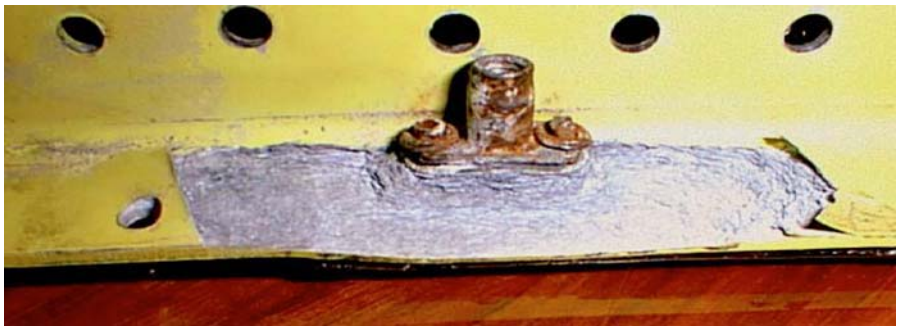

Figure 1-9. Example of Exfoliation Corrosion

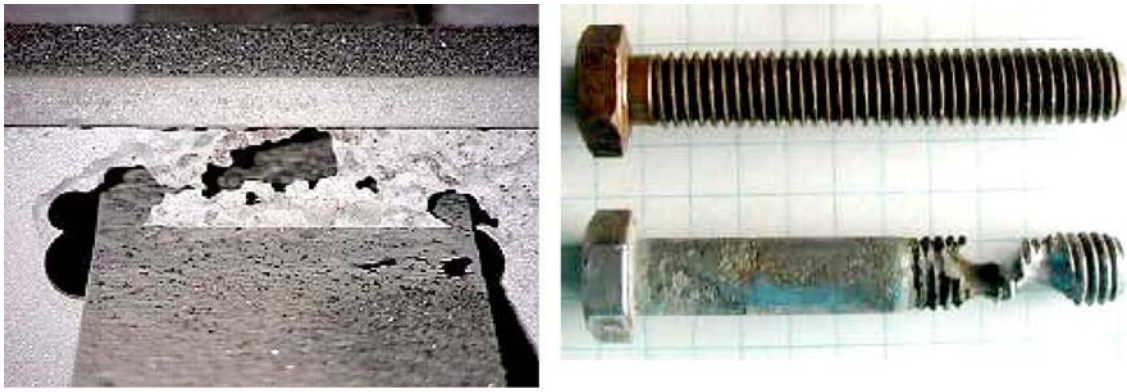

Figure 1-10. Examples of Concentration/Crevice Corrosion

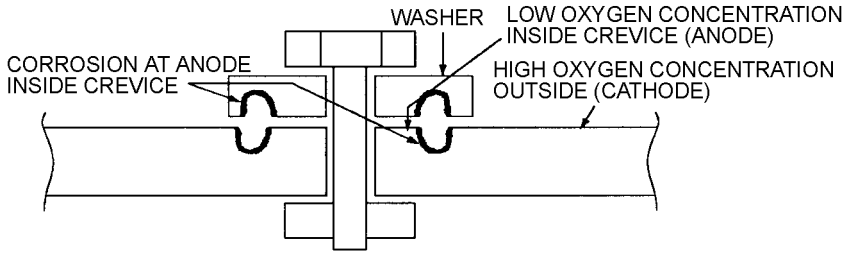

Figure 1-11. Illustration of a Typical Concentration Corrosion Cell

1.7.7 Stress Corrosion Cracking. Stress corrosion cracking (SCC) is the intergranular cracking of a metal caused by the combined effects of constant tensile stress (internal or applied) and corrosion. Internal or residual stresses are produced by cold working, forming, and heat treatment operations during manufacture of a part and remain concealed in the part unless stress relief operations are used. Other hidden stresses are induced in parts when press or shrink fits are used and when slightly mismatched parts are clamped together with rivets and bolts. All these stresses add to those caused by applying normal loads to parts in operation. Metals have threshold stresses below which stress corrosion cracking will not occur. This threshold stress varies from metal to metal and depends on the characteristics of the stress that is applied. The following conditions must be present for SCC to occur. The component or structure must be under a tensile stress. This tensile stress may be provided by an externally applied service load or a residual stress resulting from manufacturing procedures such as rolling, punching, deep drawing, or welding. The material must also be exposed to an environment that causes SCC. Whereas all metals will form stress corrosion cracks in some environment under the proper conditions, there is no one environment that will cause SCC in all metals. SCC is most prevalent and of the most concern in high strength steels, stainless steels (mostly in the austenitic group), high strength aluminum alloys (2000 and 7000 series), copper-based alloys, and titanium alloys.

1.7.8 Hydrogen Embrittlement. Hydrogen embrittlement is the weakening of materials such as high-strength steel (typically 180 Ksi and above), some high-strength aluminum, titanium, and some types of stainless steels when they are exposed to acidic materials such as acid paint removers, acidic metal pretreatments and cleaners, plating solutions, and some alkaline materials. This occurs when the materials causes a cathodic reaction on the metal surface that produces hydrogen. The hydrogen diffuses into the bulk metal, accumulating at grain boundaries and weldments weakening the structure. If the part is under load or contains residual manufacturing stresses, sudden catastrophic failure occurs when the part can no longer sustain the internal and/or applied stresses. Hydrogen embrittlement has been known to occur in parts stressed to only 15% of nominal tensile strength.

1.7.9 Corrosion Fatigue. Corrosion fatigue is the cracking of metals caused by the combined effects of cyclic stress and corrosion and is very similar to stress corrosion cracking. If it is in a corrosive environment, no metal is immune to some reduction in resistance to cyclic stressing. Corrosion fatigue failure occurs in two stages. During the first stage, the combined action of corrosion and cyclic stress damages the metal by pitting and forming cracks in the pitted area. The second stage is the continuation of crack propagation, in which the rate of cracking is controlled by. In simplified terms, corrosion fatigue is mechanical fatigue aggravated by a corrosive environment. In corrosion fatigue, the corrosive environment causes a lowering or reduction of the fatigue limit (the ability of a metal to resist fatigue cracking) of a metal as it undergoes cycles of stress. In the absence of a corrosive environment, this same metal would be able to withstand significantly more cycles of stress before cracking. Corrosion fatigue seems to be most prevalent in environments that cause pitting corrosion.

1.7.10 Filiform Corrosion. Filiform corrosion is a special form of oxygen concentration cell corrosion (or crevice corrosion) that occurs on metal surfaces having an organic coating system. It is recognizable by its characteristic wormlike trace of corrosion products beneath the paint film (see Figure 1-12). Filiform occurs when the relative humidity of the air is between 78% and 90% and when the surface is slightly acidic. It starts at breaks in the coating system (such as scratches and cracks around fasteners and seams) and proceeds underneath the coating because of the diffusion of water vapor and oxygen from the air through the coating. Filiform corrosion can attack steel, magnesium, and aluminum surfaces and may lead to more serious corrosion in some locations. Filiform corrosion can be prevented by: storing equipment in an environment with a relative humidity below 70%; using coating systems with a low rate of diffusion for oxygen and water vapors; maintaining coatings in good conditions; and washing equipment to remove acidic contaminants from the surface (such as those created by air pollutants). Filiform corrosion most often occurs in humid environments. Once the humidity drops below 65%, Filiform corrosion stops. When the humidity rises above 95%, blisters form rather than filaments. Filiform corrosion forms mostly on steel, aluminum, magnesium, and zinc.

1.7.11 Fretting Corrosion. Fretting corrosion (see Figure 1-13) is a special form of concentration cell corrosion that occurs in combination with surface wear. The corrosion products increase the wear of the surface, and the wear exposes additional bare metal surface to be corroded. The overall effect is greater than the single effects of corrosion and wear added together. It has the general appearance of galling, in which chunks of metal are torn from the surface with corrosion at the torn areas or ragged pits. This type of corrosion occurs on faying surfaces of close tolerance and on parts under high pressure in a corrosive environment when there is slight relative movement of parts (such as that caused by vibration). Fretting corrosion is normally encountered in heavily loaded static joints that are subject to vibration and that are not sealed to prevent moisture entry. Fretting corrosion is corrosion that occurs between metals that are under load and subject to vibration and/or slip. It appears as pits or grooves in the metal surrounded by corrosion products. Fretting corrosion can be very destructive in that it loosens mated parts and close tolerance fittings that in turn lead to stress or fatigue failures. In the case of iron alloys, brown to red iron oxide will be visible from the area or interface experiencing fretting corrosion. On aluminum alloys, a black corrosion product is evident. Fretting corrosion is most commonly found in heavily loaded joints that are subject to vibration such as press fitted ball bearing races, bolted flanges, fayed surfaces, electrical connections, and riveted areas.

Figure 1-12. Example of Filiform Corrosion

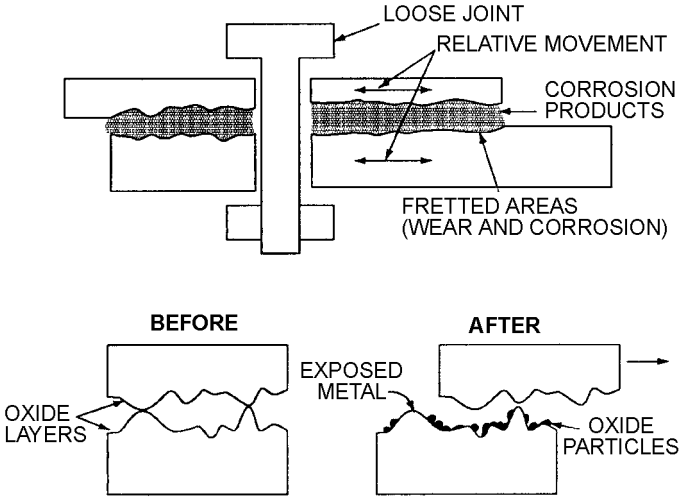

Figure 1-13. Illustration of a Fretting Corrosion Cell

1.8 METALS AFFECTED BY CORROSION.

The characteristics of corrosion on SE metals are summarized in Table 1-2. The following is a discussion of corrosion characteristics of commonly used metals.

1.8.1 Magnesium. Magnesium alloys are the lightest structural metals used for SE construction. These alloys are highly susceptible to corrosion, which appears as white, powdery mounds or spots when the metal surface is exposed to the environment without a protective finish. The normal oxide-carbonate film formed on magnesium alloys does not provide sufficient corrosion protection even in the mildest environment. The rate of corrosion of a magnesium alloy increases when the alloy is immersed in water or periodically subjected to moisture. Corrosion may also be accelerated by dissimilar metal couples and when conductive contaminants are dissolved in water. Corrosion of magnesium alloys can be greatly diminished by the use of the proper protective finish. Some magnesium parts in use were originally protected by anodizing processes, such as HAE and DOW 17 coatings. The HAE process can be identified by the brown to mottled gray appearance of the unpainted surface. DOW 17 coatings have a green to grayish-green color. Electrolytic coatings are thicker than those applied by immersion or brushing. Electrolytic finishes cannot be restored in the field. Take care to minimize removal of these coatings. At the field level, corrosion removal and surface pretreatment on magnesium parts should be referred to the Aircraft Structural Maintenance Technicians for repair of the conversion coatings.

1.8.2 Steel. Ferrous (iron) alloys are used to manufacture many components and assemblies in SE and other equipment such as frames and bodies of trailers, and lesser structural parts such as brackets, racks, and panels. If unprotected, ferrous alloy surfaces, (with the exception of stainless steels also known as corrosion resistant steel (CRES)), corrode easily in the presence of moisture. Ferrous alloy surfaces are normally painted or plated to prevent corrosion. Corrosion of steel is easily recognized because the corrosion product is red or black color. When ferrous alloys corrode, a dark corrosion product usually forms first. When moisture is present, this coating is converted to the common red or black corrosion product.

1.8.3 Aluminum. Aluminum and aluminum alloys are widely used for SE construction. Aluminum is highly anodic, as evidenced by its position in the galvanic series. However, the formation of a tightly adhering oxide film offers increased resistance under mild corrosive conditions. Some aluminum parts are protected with an electrochemically applied anodized coating. Aluminum oxide film on aluminum is a naturally occurring protective film; anodizing increases the thickness of the oxide film. When this coating is damaged, it can only be partially restored by chemical surface treatment. Avoid unnecessary destruction of the anodized surface layer during the processing of anodized aluminum.

1.8.3.1 The corrosion product of aluminum is a white to gray powdery material (aluminum oxide or hydroxide), which can be removed by mechanical polishing or brushing with an abrasive. Aluminum is anodic to most other metals, and, when in contact with them, galvanic corrosion of the aluminum will occur. Aluminum alloys are subject to pitting, intergranular corrosion, and stress corrosion cracking. In some cases, the corrosion products of a metal in contact with aluminum are corrosive to aluminum. Therefore, it is necessary to clean and protect aluminum and its alloys against corrosion.

1.8.3.2 Because pure aluminum is more corrosion-resistant than most alloys, aluminum sheet stock is often covered with a thin layer of nearly pure aluminum called cladding. Cladding is often removed by harsh treatment with abrasives and tooling, exposing a more corrodible surface. In such areas, paints and CPCs are especially important. However, in environments where SE is exposed to salt-laden atmosphere or significant industrial pollutants, all bare aluminum surfaces require protection.

1.8.4 Copper and Copper Alloys. Copper and copper alloys are quite corrosion-resistant, with corrosion usually limited to staining and tarnish. Generally, such changes in surface conditions are not dangerous and usually do not affect the part. Copper corrosion is evidenced by the accumulation of blue or blue-green corrosion products. Protective paint coatings are seldom required because of the inherent resistance of the metal. However, paint finishes may be applied for appearance purposes. The green patina is merely a thin coating consisting mainly of basic copper sulfate and perhaps some hydrated copper carbonate. The patina in the thin, firmly adhering state actually offers increased corrosion protection to the base metal, but the patina in a rough or frosted state should be removed. When coupled with most metals used in SE construction, copper is the less active metal and greatly accelerates the corrosion of other metals. This is especially true in copper/aluminum couples. Examples are usually found in electrical components and in areas where copper bonding strips or wires are fastened to an aluminum chassis or structural components.

1.8.5 Stainless Steel. Stainless steel or corrosion-resistant steel (CRES), as they are more properly described, are alloys of iron with chromium. Many other elements such as nickel, sulfur, molybdenum, vanadium, cobalt, columbium, titanium, and aluminum are added in various amounts and combinations to develop special characteristics. Stainless steels are much more resistant to common rusting, chemical actions, and high-temperature oxidation than ordinary steels because of the formation of an invisible oxide film or passive layer on the surface of these alloys. Corrosion and heat-resistance are the

major factors in selecting stainless steels for a specific application. However, it should be emphasized that stainless steels are not a cure for all corrosion problems because of service conditions that can destroy the oxide film on their surfaces. Stainless steels are highly susceptible to crevice corrosion and stress corrosion cracking in moist, salt-laden environments. In addition, if proper techniques of sealing and protective coating are ignored, they can cause galvanic corrosion of almost any other metal with which they are in contact. Stainless steels may be magnetic or nonmagnetic. Magnetic steels are identified by numbers in the American Iron and Steel Institute (AISI) as 400-series (such as 410 and 430). These steels are not as corrosion-resistant as nonmagnetic steels, which are identified by numbers in the AISI 300-series (such as 304 and 316). The AISI 300-series steels have nickel contents ranging from 6% to 22%; the 400-series steels have nickel contents of only 2%.

1.8.6 Nickel and Chromium. Nickel and chromium are used as protective plating. Chromium plating is also used to provide a smooth, wear resistant surface and to reclaim worn parts. A nickel undercoat is used for corrosion resistance in a marine environment. The degree of protection depends on plating thickness. Both of these metals form continuous oxide coatings that can be polished to a high luster and still protect themselves and any underlying metal. Chromium coatings contain cracks, and corrosion originates at the base metal below these separations.

Table 1-2. Corrosion of Metals - Type of Attack and Appearance of Corrosion Products

Alloy	Corrosion Susceptibility	Appearance of the Corrosion
Magnesium	Pitting	Rough, white powdery deposits
Low Alloy Steel	Surface oxidation, pitting, concentration cell	Reddish-brown or black deposits
Aluminum Alloy	Surface oxidation, pitting, intergranular, exfoliation, stress corrosion, fatigue, and fretting, concentration cell	White to gray powdery deposits
Stainless Steel/CRES (300-400 Series)	Crevice corrosion, some pitting in a marine environment or water storage containers with high chlorine levels, corrosion cracking intergranular corrosion (300 series) and surface corrosion (400 series)	Rough surface, sometimes a red, brown, or black uniform stain or pits
Copper-Base Alloys, Brass, Bronze	Surface oxidation, pitting	Blue to blue-green powdery deposits
Chrome/Nickel	Pitting (promotes rusting of the substrate steel where the pits in the plating occur).	Usually there are no visible corrosion products on the plating surfaces. Blistering of the plating is due to the rusting and lifting of the substrate metal.

CHAPTER 2
CLEANING

2.1 GENERAL.

2.1.1 Introduction. A well developed cleaning program utilizing approved cleaning materials and processes is a key factor in reducing the impact of corrosion. Use of untested or unauthorized cleaning materials may cause premature coating system failure and or accelerated corrosion.

2.1.2 SE Wash Cycles. For the purpose of this chapter Support Equipment (SE) refers only to powered and non-powered Aerospace Ground Equipment to include propulsion and munitions handling trailers. However, MAJCOMs may add additional types of equipment to the wash program. SE must be washed in accordance with Table 2-1. SE assigned to locations categorized as mild/moderate must be washed every 180 days. Wash can be scheduled in conjunction with phase inspection if scheduled within due month. At locations categorized as severe, SE must be washed every 90 days/quarterly at minimum. MAJCOMs and local units may mandate or implement wash intervals more frequently than those reflected in Table 2-1. When determining more frequent wash cycle intervals, a variety of factors should be considered. If the corrosion protective systems (primers and topcoats) are in poor condition or are compromised in any way, the coatings have not been touched up, the equipment is stored outdoors, and/or there is already evidence of corrosion, more frequent washing and/or rinsing is of increased importance. Where corrosion of this equipment is already a problem, wash cycles even more frequent than 90 days/quarterly is recommended. If the SE is temporarily assigned to locations where cleaning is not practical, the affected equipment shall be cleaned, inspected, and lubricated within 30 days of returning to home station. Base locations not listed in Table 2-1 will use the requirements of the nearest base location unless within 1.25 miles of salt water. Locations within 1.25 miles of salt water are considered severe and require 90 day wash. Contact AFCPCO for further guidance if needed.

NOTE

Washing is a critical element of a comprehensive corrosion program which also includes using only qualified products for washing, painting, and other corrosion prevention processes. This program must include refurbishment of the equipment prior to deterioration from corrosion, routine touch-up of the coating system, use of corrosion preventive compounds (CPC) where touch-up cannot be accomplished immediately, and covered storage where practical.

2.1.3 Definition of Cleaning. Cleaning is a broad term covering methods and materials needed to remove soils from a surface. Selection of an appropriate cleaning method in any given case depends on three important factors: (1) type and amount of soil, (2) base material composition and surface condition, and (3) degree of cleanliness required.

2.1.4 Types of Cleaners. Cleaners that are used in this technical manual may be placed in types as follows:

2.1.4.1 Alkaline cleaners remove soil by displacement of the contaminants from the surface rather than by direct solution in the cleaner. After displacement, the soils may be carried in the body of the cleaner as a suspension; it may separate, or in the case of fatty soils, it may react partially or completely with the cleaner to form water-soluble soap. Cleaners of this type usually have components that aid in cleaning by lifting the soils and other contaminants from a surface.

2.1.4.2 Solvent cleaners remove a soil by dissolving the soil and usually leave a thin film or residue of an oily nature. Removal of this oily film or residue is accomplished by using an alkaline cleaner.

2.1.4.3 Solvent emulsion cleaners remove a soil by emulsifying the oil constituent of the soil and holding it in suspension until rinsed from the surface with water.

2.1.5 Methods of Cleaning. Methods of cleaning used in this technical manual are four types, as follows:

2.1.5.1 Hand cleaning is commonly used when the parts/equipment cleaning volume of work is too small, or the parts too large to justify the expense of special equipment. Cleaning solutions may be applied by means of brushes, swabs, or cloths. Wherever the cleaning materials may be harmful to the skin, personnel shall be supplied with proper safety equipment. Hand cleaning is time consuming and may use more water than other washing techniques. Pressure washers are normally used; however, organizations sometimes use “Foamers” to wash equipment.

2.1.5.2 Spray washing is usually the most-rapid method for cleaning. The chief feature of spray washing is the application of the mechanical force of the spray in addition to the chemical and physical actions of the cleaning solution. By means of these combined actions, the soil is rapidly wetted, penetrated, loosened, removed from the surface, and suspended in the solution in a free-rinsing condition.

Table 2-1. Wash Interval Based on Corrosion Severity Zones

Location	Severe (90 days)	Moderate/Mild (180 Days)
Afghanistan (All Locations)		X
AJ Taif, SA		X
Al Dhafra, UAE		X
Al Jouf, SA		X
Al Udeid AB, Qatar		X
Ali Al Salem, Kuwait		X
Allen C. Thompson Fld.; Jackson, MS (ANG)		X
Altus AFB, OK (AETC)		X
As Sulayyil, SA		X
Anderson AFB, GU	X	
Anchorage IAP, AK (ANG)		X
Andrews AFB, MD (Wash. DC)		X
Atlantic City, NJ (ANG)		X
Aviano AB, IT		X
Bahrain	X	
Balad		X
Bangor IAP, ME (ANG)		X
Barksdale AFB; Shreveport, LA		X
Barnes M. Apt; Westfield, MA (ANG)		X
Battle Creek, MI (ANG)		X
Beale AFB; Marysville, CA		X
Boise Air Term., ID (ANG)		X
Bradley IAP; Windsor Locks, CT (ANG)		X
Brindisi/Casale AB, IT	X	
Buckley ANGB; Denver, CO (ANG)		X
Burlington IAP, VT (ANG)		X
Byrd Fld.; Richmond, VA (ANG)		X
Camp Lemonnier, Djibouti	X	
Cannon AFB; Clovis, NM		X
Capital Mun. Apt.; Springfield, IL (ANG)		X
Channel Island; Port Hueneme NAS, CA (ANG)	X	
Cheyenne Apt., WY (ANG)		X
Charleston AFB, SC		X
Charleston Apt., WV (ANG)		X
Columbus AFB, MS (AETC)		X
Curacao, Netherlands, Antilles	X	
Danelly Fld.; Montgomery, AL (ANG)		X
Davis-Monthan AFB; Tucson, AZ		X
Des Moines IAP, IA (ANG)		X
Dhahran, SA		X
Diego Garcia	X	
Dobbins ARB; Marietta, GA (AFRC)		X
Douglas IAP; Charlotte, NC (ANG)		X
Dover AFB, DE		X

Table 2-1. Wash Interval Based on Corrosion Severity Zones - Continued

Location	Severe (90 days)	Moderate/Mild (180 Days)
Duluth IAP, MN (ANG)		X
Dyess AFB; Abilene, TX		X
Eareckson (Shemya) AFB, Aleutian Is., AK	X	
East WV Reg. Apt: Martinsburg, WV (ANG)		X
Edwards AFB; Rosamond, CA		X
Eglin AFB; Valparaiso, FL	X	
Eglin AFB (Aux Fld. #3), FL		X
Eielson AFB, AK		X
Ellington Fld.; Houston, TX (ANG)		X
Ellsworth AFB; Rapid City, SD		X
Elmendorf AFB; Anchorage, AK		X
Fairchild AFB; Spokane, WA		X
Fairford, UK		X
Falcon AFB, CO		X
Forbes Fld.; KS (ANG)		X
Fort Smith Mun. Spt., AR (ANG)		X
Fort Wayne Apt., IN (ANG)		X
Francis E. Warren AFB; Cheyenne, WY (ANG)		X
Fresno Air Term., CA (ANG)		X
Geilenkhirchen, GE		X
Gen. Mitchell IAP.; Milwaukee, WI (ANG)		X
Grand Folks AFB; Emarado, ND		X
Great Falls IAP, MT (ANG)		X
Greater Peoria Apt.; IL (ANG)		X
Griffiss AFB; Rome, NY		X
Grissom ARB; Peru, IN (AFRC)		X
Hancock IAP; Syracuse, NY (ANG)		X
Hanscom AFB; Bedford, MA		X
Harrisburg IAP, PA (ANG)		X
Hector IAP; Fargo, ND (ANG)		X
Hickam AFB; Honolulu, HI	X	
Hill AFB; Ogden, UT		X
Holloman AFB; Alamogordo, NM		X
Homestead AFB, FL (AFRC)		X
Howard AB; Panama		X
Hulman Reg. Apt., IN (ANG)		X
Hurlburt Fld.; Fort Walton Beach, FL	X	
Incirlick AB, Turkey		X
Istres AB, France		X
Jacksonville IAP, FL (ANG)		X
Jeddah, SA		X
Joe Foss Fld.; Sioux Falls, SD (ANG)		X
Kadena AB, Japan	X	

Table 2-1. Wash Interval Based on Corrosion Severity Zones - Continued

Location	Severe (90 days)	Moderate/Mild (180 Days)
Keesler AFB; Biloxi, MS	X	
Key Fld.; Meridian, MS (ANG)		X
Khamis Mushay, SA		X
Khandahar, Afghanistan		X
Kiruk, Iraq		X
King Khalid, SA		X
Kingsley Fld.; Klamoth Falls IAP, OR (ANG)		X
Kirtland AFB, NM; Albuquerque, NM		X
Fort Kutaka Army Base, AZ		X
Kunsan AB; S. Korea	X	
Lackland AFB, TX		X
Lajes Fld.; Azores, Portugal	X	
Lambert Fld.; St. Louis IAP, MO (ANG)		X
Langley AFB; Hampton, VA	X	
Larnaka International Apt., Cyprus	X	
Laughlin AFB; Del Rio, TX		X
Lincoln Mun. Apt, NE (ANG)		X
Little Rock AFB, AR (AETC & ANG)		X
Luke AFB; Glendale, AZ		X
MacDill AFB; Tampa, FL	X	
Malmstrom AFB; Great Falls, MT		X
Manas, Kyrgystan		X
Mansfield Lahm Apt., OH (ANG)		X
Mantas, Ecuador	X	
March ARB; Riverside, CA (AFRC & ANG)		X
Martin St. Apt.; Baltimore, MD (ANG)		X
Maxwell AFB; Montgomery, AL		X
McChord AFB; Tacoma, WA		X
McConnell AFB, Wichita, KS		X
McEntire ANGB; Columbia, SC (ANG)		X
McGhee Tyson Apt; Alcoa, TN (ANG)		X
McGuire AFB; Wrightstown, NJ		X
McMurdo Station, Antarctica		X
Memphis IAP, TN (ANG)		X
Minot AFB, ND		X
Minn.-St. Paul IAP, MN (ARFC & ANG)		X
Misawa AB, Japan		X
Moffett Fld., CA (ANG)		X
Moody AFB; Valdosta, GA (AETC)		X
Moron AB, Spain		X
Mountain Home AFB; Boise, ID		X
NAS Fort Worth, TX (ANG & AFRC)		X
NAS Keflavik, Iceland	X	
NAS New Orleans, LA (ANG & AFRC)		X

Table 2-1. Wash Interval Based on Corrosion Severity Zones - Continued

Location	Severe (90 days)	Moderate/Mild (180 days)
NAS Rota; Rota, Spain	X	
NAS Sigonella; Sicily, Italy	X	
NAS Souda Bay (Chania Apt.), Crete	X	
Nashville Met. Apt, TN (ANG)		X
Nellis AFB; Las Vegas, NV		X
Newburgh Apt. NY (ANG)		X
New Castle Co. Apt.; Wilmington, DE (ANG)		X
Niagara Falls IAP, NY (AFRC & ANG)		X
Offutt AFB; Omaha, NE		X
O'Hare IAP; Chicago, IL (AFRC)		X
Osan AB; S. Korea		X
Otis ANGB; Falmouth, MA (ANG)		X
Patrick AFB; Cocoa Beach, FL	X	
Pease ANGB; Portsmouth, NH (ANG)		X
Peterson AFB; Colorado Springs, CO		X
Pittsburgh IAP, PA (AFRC & ANG)		X
Pope AFB; Fayetteville, NC		X
Portland IAP, OR (ANG)		X
Prince Sultan AB, Al Kharj, SA		X
Puerto Rico IAP/ Muniz ANGB; San Juan,	X	
Quonset St. Apt; Providence, RI (ANG)		X
RAF Akrotiri, Cyprus	X	
RAF Lakenheath, UK		X
RAF Mildenhall, UK		X
Ramstein AB, GE		X
Randolph AFB; San Antonio, TX (AETC)		X
Reno/Tahoe IAP, NV (ANG)		X
Rhein-Main, GE	X	
Richenbacker IAP; Columbus, OS (ANG)		X
Riyadh, SA		X
Robins AFB; Warner Robins, GA		X
Rosecrans Mem. Apt.; St. Joseph, MO (ANG)		X
Salt Lake City IAP, UT (ANG)		X
Schenectady Co. Apt. NY (ANG)		X
Scott AFB; Belleville, IL		X
Selfridge ANGB; Mount Clemens, MI (ANG)		X
Seymour Johnson AFB; Goldsboro, NC		X
Shaw AFB; Sumter, SC		X
Sheppard AFB; Wichita Falls, TX (AETC)		X
Sioux Gateway Apt.; Sioux City, IA (ANG)		X
Sky Harbor Apt.; Phoenix, AZ (ANG)		X
Spangdahelm AF, GE		X
Springfield-Bleckley Mun. Apt., OH (ANG)		X

Table 2-1. Wash Interval Based on Corrosion Severity Zones - Continued

Location	Severe (90 days)	Moderate/Mild (180 Days)
Standiford Fld. IAP; Louisville, KY (ANG)		X
Suffolk Co. Apt., NY (ANG)	X	
Tabuk, SA		X
Taegu, S. Korea		X
Talil, Iraq		X
Thumrait, Oman		X
Tinker AFB; Oklahoma City, OK		X
Toledo Exp. Apt.; Swanton, OH (ANG)		X
Travis AFB; Fairfield, CA		X
Travis Fld.; Savannah, GA (ANG)		X
Truax Fld./ Dane City Reg. Apt.; Madison, WI (ANG)		X
Tuscon IAP, AZ (ANG)		X
Tulsa IAP, OK (ANG)		X
Tyndall AFB, Panama City, FL	X	
Utapao IAP, Thailand	X	
Vance AFB; Enid, OK (AETC)		X
Vandenberg AFB; Lompoc, CA		X
Westover AFB; Chicopee, MA (AFRC)		X
Whiteman AFB; Knobnoster, MO		X
Willow Grove ARS; Philadelphia, PA (AFRC & ANG)		X
Will Rogers IAP; Oklahoma city, OK (ANG)		X
Wright-Patterson AFB; Dayton, OH		X
Yeager Apt.; Charlesron, WV (ANG)		X
Yokota AB, Japan		X
Youngstown-Warren Reg. Apt. ARS, OH (AFRC)		X

2.1.5.3 Immersion in cleaning tanks is usually used for disassembled parts submerged in an authorized cleaning compound(s). Since the cleaning compounds may act as an electrolyte between two or more metals, care shall be taken not to intermingle the different metals together in the same cleaning tank.

2.1.5.4 Use of foamers involve injecting air into a tank containing a soap solution, which rapidly mixes the air and solution as it leaves the tank via a hose. This process produces a very thick, foamy solution that adheres well to the exterior of the SE allowing the cleaning solution to maintain contact with the surface being cleaned.

2.1.5.4.1 The solution is allowed to dwell on the SE briefly, scrubbed with wash pads or mops, then is rinsed off the SE with fresh water.

2.1.5.4.2 Detergent can be added at a pre-set and controlled rate when using foamers or pressure washers for SE cleaning. Therefore, these methods are preferred over hand washing, which cannot regulate the amount of detergent used.

2.1.6 Cleaning Materials. An effective cleaning program significantly reduces the adverse impact of corrosion. The cleaning program includes the selection of authorized cleaning materials, mixed in the proper ratio for the surface to be cleaned, properly applied, and removed.

2.1.6.1 Material compatibility is a key element in a cleaning program. Cleaning material composition and surface condition affect the methods and materials to be used in cleaning. Certain nonferrous metals, such as zinc and aluminum, present special problems because heavy-duty alkaline or strong acid cleaners attack the metal. Roughness of surface tends to hold a soil, thereby making it harder to remove.

CAUTION

Selection and use of unapproved cleaning compounds or approved cleaning compounds improperly diluted may cause damage to the components or painted surfaces. Each cleaner has specific uses, and must be carefully used to prevent personal injury or damage to equipment. Only use authorized cleaners that are listed on the QPL/QPD for a specific specification. Also, ensure all cleaning compounds are properly diluted for the types soils to be cleaned.

NOTE

- A listing of the most current QPL/QPD for a specific cleaning compound can be found on the Defense Logistics Agency website for specifications, handbooks, and QPL/QPD data (http://assist1.daps.dla.mil/quicksearch.) or on the Air Force Corrosion Prevention and Control office website located on the Air Force Portal.

NOTE

- Many of the authorized cleaning compounds are biodegradable in many waste treatment facilities, however some are not, before purchasing and using a specific product, consult with the base environmental management to verify that the cleaners can be introduced into the waste water treatment system.

2.1.6.2 Authorized cleaning materials, mixing ratios and cleaning procedures that may be used on SE are shown in Table 2-2. MIL-PRF-87937, Cleaning Compound Aerospace Equipment, is the preferred cleaning compound for SE. However, if MIL-PRF-87937 is not available, MIL-PRF-85570; Cleaning Compound Aircraft Exterior and MIL-C-43616, Cleaning Compound Aircraft Surfaces, maybe used. The following is a brief general description of the different cleaning compounds.

2.1.6.2.1 MIL-PRF-85570, Cleaning Compound Aircraft Exterior, Type I, is for general use on exterior surfaces, and is effective for use on heavy soils and grease. Type I contain solvents and should not be used in poorly ventilated areas or on painted lacquer surfaces, unpainted plastic or unpainted composite surfaces.

2.1.6.2.2 MIL-PRF-85570, Cleaning Compound Aircraft Exterior, Type IA, is the same product as Type I, but is in an aerosol used for spot cleaning on exterior surfaces. Type IA contains solvents and should not be used in poorly ventilated areas or on painted lacquer surfaces, unpainted plastic or unpainted composite surfaces.

2.1.6.2.3 MIL-PRF-85570, Cleaning Compound Aircraft Exterior, Type II, does not contain solvents and is used for general use on exterior and interior surfaces. It is effective on light oils and hydraulic fluids.

2.1.6.2.4 MIL-PRF-85570, Cleaning Compound Aircraft Exterior, Type III, is for use on high gloss surfaces only. It contains abrasives that remove soils by wearing away the surface that holds the soil. This cleaner will raise the gloss of gloss, semi-gloss, or flat topcoats. Type III is used to spot clean, and clean engine exhaust areas on gloss finishes.

2.1.6.2.5 MIL-PRF-85570, Cleaning Compound Aircraft Exterior, Type IV, contains solvents, detergents, and suspended rubber particles. It is a spot cleaner, for use on tactical paint systems. It effectively cleans exhaust tracks, smudges, boot marks, or other embedded soils. When the cleaning compound containing the rubber particles are rubbed on a soiled surface, the particles act like tiny erasers and remove soil by entrapping the soil in the rubber particles. This cleaner will not alter the gloss of a camouflage coating.

2.1.6.2.6 MIL-PRF-85570, Cleaning Compound Aircraft Exterior, Type V, is a low solvent (less than ten percent), gelled cleaner which can be used to replace solvent cleaning where water rinsing can be allowed, and can be used to clean vertical surfaces where thin cleaners will run off. To be fully effective, Type V must be applied to a dry surface, do not prerinse the SE before application of the Type V cleaning compound.

2.1.6.2.7 MIL-C-43616, Cleaning Compound Aircraft Surfaces, Class I, has a very high solvent content and is effective in removing oil soils. It should not be used where ventilation is poor or on nonpolyurethane paints/markings, vinyl markings/decals, unpainted/unprotected plastic or composite surfaces.

2.1.6.2.8 MIL-C-43616, Cleaning Compound Aircraft Surfaces, Class IA, is an aerosol version of Class I as is very effective as a spot cleaner. It should not be used where ventilation is poor or on nonpolyurethane paints/markings, vinyl markings/decals, unpainted/unprotected plastic or composite surfaces.

2.1.6.2.9 MIL-PRF-87937, Cleaning Compound Aerospace Equipment, Type I, is a terpene based solvent emulsion cleaning for general use on exterior surfaces. It is effective for removing heavy oils, greases and carbon deposits. Suitable for use on high gloss or tactical paint systems. Type I should not be used in poorly ventilated areas. Do not heat above 115 °F. Type I will separate-out oily waste, so the waste can be removed and disposed of while the remainder of the liquid is sent to a waste treatment facility.

2.1.6.2.10 MIL-PRF-87937, Cleaning Compound Aerospace Equipment, Type III, is a gelled cleaner, and is effective for cleaning medium to heavily soiled surfaces. May be used on painted or unpainted surfaces where additional dwell time is desired. It should be used in areas that can tolerate high volumes water rinsing necessary to remove the gelled cleaning compound. Since the cleaning compound is a gel, it will adhere to vertical surfaces for more effective cleaning. To ensure the cleaning compound effectiveness, apply the cleaning compound to dry surfaces. Type III will separate-out oily waste, however, because the cleaning compound is a gel-type material the oil/cleaner separation is difficult to determine unless the solution sits for several hours.

2.1.6.2.11 MIL-PRF-87937, Cleaning Compound Aerospace Equipment, Type IV, is heavy duty cleaner, effective for cleaning heavy oils and greases. This material differs from Type I in that it has no flash point. Suitable for use on high gloss or tactical paint systems. Type IV will separate out oily waste, so the oil can be removed and disposed of while the remainder is sent to a waste treatment facility.

2.1.6.2.12 MIL-PRF-87937, Cleaning Compound Aerospace Equipment, Types I and IV cleaners may be used in dip tanks but are not formulated for use in vapor degreasing tanks. The gel-type cleaning compounds are not suitable for dip tank cleaning operations.

Table 2-2. Authorized Cleaning Materials

Type of Soils or Surfaces To Be Cleaned	Cleaning Material	Mixing Directions	Cleaning Procedures	Comments
Light Soils (Dirt, Dust, Mud, Salt, Loose Soot)	MIL-PRF-85570, Type I	1 part cleaner to 16 parts water	Apply cleaner solution with a foam generator, spray, sponge, soft bristle brush or cloth. Scrub and then rinse with fresh water and dry.	Best used for general cleaning on painted and unpainted surfaces. Suitable for use on high gloss or tactical paint systems.
	MIL-PRF-85570, Type II	1 part cleaner to 9 parts water		
	MIL-PRF-87937, Type I	1 part cleaner to 20 parts water		
	MIL-PRF-87937, Type III or MIL-PRF-85570, Type V	Undiluted	Allow the cleaner to dwell for 1-2 minutes, then agitate with a brush and completely rinse with water and allow drying.	The gel-type cleaning compound is designed to adhere to vertical surfaces for more effective cleaning. The cleaning compound contains abrasives that remove soils by wearing away the surface that holds the soil. This cleaner will raise the gloss of gloss, semi-gloss, or flat topcoats. The cleaning compound should be used in areas that can tolerate high volumes water rinsing necessary to remove the gelled cleaning compound. Do not use on plastic parts.

Table 2-2. Authorized Cleaning Materials - Continued

Type of Soils or Surfaces To Be Cleaned	Cleaning Material	Mixing Directions	Cleaning Procedures	Comments
Moderate to Heavy Soils, Oils Hydraulic Fluid, Lube Oil, Light Preservatives and Carbon Buildup	MIL-PRF-680, Type II or III, (CID A-A-59601)	Undiluted	Apply with a brush, pad, or cloth and agitate, repeat until surface contaminants are removed from the surface or suspended in the solvent. If oily residue is acceptable, rinse with water and wipe dry with a clean cloth. If oily residue is not acceptable use the diluted cleaning compounds listed under the moderate soils section of this table.	
	MIL-PRF-87937, Type IV or MIL-PRF-85570, Type III	Undiluted	Allow the cleaner to dwell for 1-2 minutes, then agitate with a brush and rinse with water. If the surface is oily or greasy apply the cleaning compound to the dry surface, allow the cleaning compound to dwell for 5-15 minutes, then agitate and rinse with water. Agitate the area again with a brush and rinse with water to completely clean/rinse the area.	The gel-type cleaning compound is designed to adhere to vertical surfaces for more effective cleaning. The cleaning compound contains abrasives that remove soils by wearing away the surface that holds the soil. This cleaner will raise the gloss of gloss, semi-gloss, or flat topcoats. The cleaning compound should be used in areas that can tolerate high volumes water rinsing necessary to remove the gelled cleaning compound. Do not use on plastic parts.
	MIL-PRF-85570, Type I	1 part cleaner to 9 parts water	Apply with a brush, pad, or cloth and agitate, repeat until surface contaminants are removed from the surface or suspended in the solvent. Completely rinse with clean water. Wipe dry with a clean cloth.	Has a very high solvent content. Should not be used where ventilation is poor or on non-polyurethane paints/markings, unprotected plastics or composite surfaces.
	MIL-PRF-85570, Type II	1 part cleaner to 4 parts water		
	MIL-C-43616, Class I	1 part cleaner to 16 parts water		

Table 2-2. Authorized Cleaning Materials - Continued

Type of Soils or Surfaces To Be Cleaned	Cleaning Material	Mixing Directions	Cleaning Procedures	Comments
Heavy Oils, Greases and Carbonized Exhaust Deposits	MIL-PRF-680, Type II or III	Undiluted	Apply with a brush, pad, or cloth and agitate, repeat until surface contaminants are removed from the surface or suspended in the solvent. If oily residue is acceptable, rinse with water and wipe dry with a clean cloth. If oily residue is not acceptable use the diluted cleaning compounds listed under the heavy soils section of this table.	MIL-PRF-680 Type II or III, also known as Stoddard's Solvent or Dry Cleaning Solvent, can be used to clean a variety of soils, particularly oils, greases and hydraulic fluids. Type III has a flash point of over 200 °F. MIL-PRF-680 will leave a slight oily residue. This is desirable if flash-rusting protection is needed. If the part cleaned with MIL-PRF-680 is to be painted or surface bonding is to occur, wiping the affected surfaces with a lean cloth dampened with a non-petroleum based cleaning compound, or solvent cleaner such as Isopropyl Alcohol TT-I-735 or Acetone O-A-51, is necessary.
	MIL-PRF-87937, Type I	1 part cleaner to 4 parts water	Wet surface with fresh water. Apply cleaning solution and scrub briskly with abrasive mat (MIL-A-9962, Type I, Grade A or B). Rinse with fresh water and dry.	Solvent emulsion cleaner. Should not be used in poorly ventilated areas. Do not heat the cleaning compound above 115 °F.
	MIL-PRF-85570, Type I	1 part cleaner to 4 parts water		Should not be used in poorly ventilated areas or on painted lacquer surfaces, unpainted plastic or unpainted composite surfaces. After cleaning, the area must be thoroughly rinsed with water to prevent streaking or paint deterioration.
	MIL-PRF-85570, Type IA	No mixing, this is a premixed aerosol		
	MIL-C-43616, Class I	1 part cleaner to 4 parts water		
	MIL-C-43616, Class IA	No mixing, this is a premixed aerosol		

Table 2-2. Authorized Cleaning Materials - Continued

Type of Soils or Surfaces To Be Cleaned	Cleaning Material	Mixing Directions	Cleaning Procedures	Comments
Spot Cleaning - Engine Exhaust Areas	MIL-PRF-85570, Type IV or V	Undiluted	Type IV: Apply full strength with a non-abrasive cleaning pad. Allow 1 to 3 minutes dwell time. Scrub with a circular motion. Rinse thoroughly, and then dry with a clean cloth. Do not allow cleaner to dry on surface.	Do not allow the cleaner to dry on the surfaces or rinsing may be difficult.
			Type V: Apply full strength with brush or pump spray device. Allow 5 minutes dwell time. Brush if necessary, then spray with fresh water to rinse.	
Spot Cleaning - Stubborn Soil on Gloss Painted Surfaces	MIL-PRF-85570, Type III	Undiluted	Apply full strength with damp cloth. Allow the cleaner to dwell for 1-2 minutes. Rub with a circular motion. If the surface is oily or greasy apply the cleaning compound to the dry surface, allow the cleaning compound to dwell for 5-15 minutes, then agitate and rinse with water. Rub with a circular motion and completely rinse area, then dry with a clean cloth. Do not allow cleaner to dry on surface.	Abrasive spot cleaner for gloss surfaces only. This cleaner will raise the gloss of gloss, semi-gloss, or flat topcoats.
Spot Cleaning - Stubborn Soils on Tactical Paint Schemes Exhaust Tracks, Smudges, Boot Marks, or Other Embedded Soils	MIL-PRF-85570, Type IV	Undiluted	Apply cleaner with a non-abrasive cleaning pad. Allow 1-3 minutes dwell time. Rub with a circular motion. Rinse thoroughly, and then dry.	Cleaning compound contains rubber particles that aid in the cleaning process. Do not allow the cleaner to dry on the surfaces or rinsing may be difficult.

2.1.7 General Cleaning Material and Processes. Cleaning compounds facilitate oils, grease, and soil removal. However, cleaning compounds can damage certain material surfaces and parts if they are improperly diluted and applied.

2.1.7.1 Cleaning Solutions. Using cleaning solutions more concentrated than the manufacturer's dilution rates are not acceptable. This action may actually hamper washing operations because concentrated soap solutions tend to make surfaces slippery, the cleaning solutions will not properly dissolve or lift the contaminants from the surface being cleaned, and can impede the washing pads from loosening the soils. In addition, concentrated solutions require more rinse water to remove excess cleaner and may cause paint deterioration or corrosion.

2.1.7.2 Cleaning Compounds. Cleaning compounds may impart Biochemical Oxygen Demand (BOD) to the washwater and increase the pH. Therefore, use of excessive amounts of cleaning compounds should be avoided.

2.1.7.3 Water Temperature. Hot-water washing breaks the bond between the grease/oil and the SE, flushing away the grease and oil. Engineering studies have concluded that hot-water washers reduces the cleaning compound usage, as opposed to cold water washing, by approximately 80 percent, cleaning times by 20 to 75 percent, and potable water usage 30 to 90 percent. Hot water shall be used, when feasible, for SE cleaning operations.

2.1.7.4 Deployed/Remote Sites. At deployed/remote sites, untreated, raw water can significantly impact the levels of dissolved metals/minerals in the washwater. Raw water could dissolve metals from building and washwater plumbing systems, including copper from copper pipe, zinc and lead from galvanized pipe, etc. To assist units in deployed locations the following water quality standards are listed below. Unless an emergency exists, organizations should have the nearest DoD civil engineer assess the water quality standards at the deployed locations prior to the commencement of washing operations. Refer to Chapter 7 for units deploying or returning from Southwest Asia (SWA) environments.

2.1.7.4.1 Water Assessment. In assessing the site wash water, the key water quality parameters: Potential of Hydrogen (pH), water hardness, total dissolved solids (TDS), and dissolved oxygen (DO) help assess the corrosivity of the water supply. In general, low pH (less than 7.0), and hardness (less than 50 milligrams per liter), and high DO content, values approaching saturation, greatly increase the corrosivity of the water.

2.1.7.4.2 Engines and Engine Components. Engines and engine components are usually washed in a washrack using a pressurized hot water or steam cleaner. Cleaning compounds may be used in the washing process. Care should be taken to ensure the forced water and/or steam is not allowed to migrate or be forced into confined areas that would prevent proper drying as subsequent corrosion could result. A water displacing CPC should be applied as soon as possible after washing to corrosion prone areas such as piano hinges, behind seals, etc.

2.1.8 Cleaning of Non-metal Parts Prior to Painting. To ensure proper adhesion between the coating and non-metal part being painted special consideration must be given to ensure the part is properly prepared for painting.

2.1.8.1 Composites. Clean with Isopropyl Alcohol, TT-I-735, Acetone, O-A-51, or a solution of one part MIL-PRF-87937 to fifteen parts water.

a. (MIL-PRF-87937 only). Rinse with water or wipe clean with a damp cloth.

b. (MIL-PRF-87937 only). Allow to dry or blow dry with compressed air not to exceed 30 PSIG.

2.1.8.2 Plastics. Clean with a solution of one part MIL-PRF-87937 to four to fifteen parts water, depending on the soil. The heavier the soil, the stronger the solution needs to be. MIL-PRF-87937 must be diluted to work effectively.

a. Rinse or wipe clean with a damp cloth.

b. Allow to dry or blow dry with compressed air at less than 30 PSIG.

2.1.9 Cleaning of Electrical Parts. The electrical insulation, wiring, contact pins and components are subject to the collection of oil, fungus, and dirt. Cleaning can be accomplished as follows:

WARNING

Do not clean electrical equipment with the power on. There are hazards of personnel being shocked or electrocuted. Disconnect batteries prior to cleaning electrical generator sets as shorting of switches may cause power to be applied to system.

CAUTION

Any solvent must be used with extreme care on insulation and insulated wires, particularly in electric equipment.

2.1.9.1 Insulation, wiring and parts shall be cleaned with a clean cloth or sponge and the use of TT-I-735 Isopropyl Alcohol. Solvents such as dry cleaning fluids, mineral spirits, or paint thinners shall not be used to clean electrical insulation, insulated wiring and parts because of the injurious affect of these solvents on materials, such as rubber and fiber, and they are fire hazards.

2.1.9.2 Pins (male contacts) and receiver holes (female contacts) which are contaminated by fungus growth can be cleaned by wiping with TT-I-735 Isopropyl Alcohol. A clean, lint-free cloth moistened with the solvent should be used to wipe the pins and a toothpick or pipe cleaner saturated with the solvent should be used to wipe out the holes.

2.1.10 Preparation of SE for Cleaning. The cleaning operation is recommended in planned steps to obtain satisfactory results. In general, steps to be followed are as follows:

2.1.10.1 To protect against cleaning solution entrapment, lubricate all fittings which will be exposed to wash solutions in accordance with maintenance manuals or maintenance cards. If fittings do not accept lubrication, replace and lube prior to wash.

2.1.10.2 Inspect the surface to be cleaned and refer to Table 2-2 to determine the type of cleaning compound and mixing ratio of cleaning compound that should give the satisfactory cleaning results. From the inspection, determine what areas should be masked or protected.

2.1.10.3 Protect louvers, scoops and other natural entrapments from the cleaning mixture by masking. Masking tape A-A-883, and/or barrier paper, MIL-PRF-121, can be effectively used for masking purposes.

2.1.10.4 The cleaning solution shall not be allowed to dry on plastics, plate glass, and painted surfaces. The cleaning solution shall not be applied to large areas that cannot be adequately agitated and thoroughly rinsed before it dries. Streaks and less effective cleaning will result if mixture dries on the surface being cleaned.

2.1.10.5 Outside cleaning will be closely controlled or not done during the warmest part of the day or on windy days, as the cleaning solution will dry rapidly. Wetting the surface with water before applying the cleaning solution will cool the surface and help prevent fast drying in hot weather. Cleaning shall be accomplished in shaded areas whenever possible during hot weather (above 80 °F).

2.1.10.6 Apply the cleaning solution until the area to be cleaned is completely covered.

2.1.10.7 Agitate the compound by scrubbing the surface with a nonmetallic brush. Vigorous scrubbing action with a brush is not usually required except in extremely soiled areas. Depending on weather conditions, allow approximately five to ten minutes from application of mixture before rinsing.

NOTE

Do not allow the cleaning mixture to dry on the equipment before rinsing.

2.1.10.8 Thoroughly rinse mixture from the area being cleaned by using large amounts of clean water. Heated water (approximately 140 °F) will give best results.

NOTE

Water needed for thoroughly rinsing shall be readily available at the surface being cleaned. Streaking (white powder and surface dulling) will result if the cleaning solution remains on the surface being cleaned too long or dries.

2.1.10.9 If streaking appears, immediate reapplication of the cleaning solution will usually reduce or eliminate this condition.

2.1.11 Cleaning of Engine Components and Enclosures. Remove carbon from disassembled engine parts with Specification SAE-AMS-C-19853 cleaning compound. Follow material manufacturer's instructions on the use of this product. This is a compound for removing or loosening carbon from engine components by means of immersion at ambient temperatures without agitation. This solution will remove many standard paint finishes. This material shall be used in a tank provided with a cover and in a well-ventilated area, although a water seal is provided to reduce evaporation and loss of the solvent. The water seal aids in pre-rinsing, reduces toxicity somewhat, and absorbs a portion of the corroding type contamination introduced when parts are being cleaned.

CAUTION

Carbon remover compound SAE-AMS-C-19853 contains chemical compounds that are hazardous and must be confined to tank use. Disposal of this compound must be in accordance with state, local, and federal requirements.

2.1.11.1 To prevent contamination of carbon remover solution, remove all loose oil, grease and dirt from the parts with solvent, MIL-PRF-680 Type II or III, (CID A-A-59601).

2.1.11.2 Place parts in a mesh basket, or suspend by wire, and immerse in the lower layer of the solution. Agitation or excessive mixing of the two layers shall be avoided during cleaning operations.

CAUTION

- Ensure the parts are below the water seal. Do not allow the basket or parts to rest on the bottom of the tank.

- Do not intermingle ferrous and nonferrous metal parts in the same immersion tank of carbon remover or other cleaning compounds as corrosion will likely occur.

2.1.11.3 Close the lid of the tank and allow the parts to soak approximately two hours, depending on the hardness and extent of the deposits to be removed.

2.1.11.4 Raise the parts slowly, permitting the parts to come in contact with the upper layer for approximately 30 seconds, then remove from the tank.

2.1.11.5 Rinse parts with hot water under pressure and allow to dry. When heated water is not ready available, cold water may be used. However, longer rinsing is required with cold water than heated water.

2.1.11.6 If the SAE-AMS-19853 cleaning compound is not available, MIL-PRF-87937, Type I is capable of removing carbon. Use it in a concentration of two parts water to one part cleaner at ambient temperatures in the tank. Do not allow parts to remain immersed in the MIL-PRF-87937, Type I for more than four hours without removal and inspecting the parts for cleanliness. For heavy carbon deposits 16-hour total immersion may be necessary. After immersion, rinse with clean water.

2.2 MECHANICAL CLEANING.

NOTE

Do not blast valve stems or precision-machined parts. All oil ports, passages and coolant passages shall be taped or plugged to prevent grit or beads from entering.

2.2.1 General Information. For the purposes of this TO, mechanical cleaning consists of sanding, grinding, wire brushing of the repair areas only or general scuff sanding only. For complete SE chemical or mechanical depainting and/or corrosion removal using medium pressure water blasting, abrasive media blasting operations to remove coatings and corrosion refer to TO 1-1-691 for information for advanced corrosion removal and surface treatment and TO 1-1-8 for complete paint removal and replacement of protective finishes.

2.2.2 Coating Removal on Composite Surfaces.

WARNING

Paints may contain toxic materials such as chromates, barium, strontium, or lead. Use goggles, gloves, and cartridge respirator during mechanical cleaning of painted surfaces. Hearing protection and air respirator shall be worn during plastic media blasting operations as directed by local bioenvironmental engineer. Contact the local safety and health office for proper personal protection equipment (PPE).

CAUTION

- SE personnel assigned to coating removal tasks must be specifically trained for the function to which they are assigned such as, the use of chemical paint removers, abrasive blasting materials and processes, powered tools, and damage limitations. Inadequate training will lead to further damage of equipment and poses a safety hazard to the individual.

- For repainting operations, under no circumstances shall the primer be completely removed to expose the composite material substrate. Damage to surface fibers usually occurs when primer is completely removed.

Coatings shall be removed from composites, such as fiberglass, carbon/graphite, and Kevlar® using only mechanical removal techniques as specified in this chapter, unless specific exceptions are provided in the appropriate maintenance manuals. Due to the irregularities in composite surfaces, complete removal of the paint and primer can damage fibers in the composite surface layers. Therefore, paint removal, for the purposes of recoating operations shall not go beyond the initial primer coat.

2.2.2.1 Coatings removed from composite surfaces for the purposes of performing coating repairs shall be performed by hand sanding or by using an orbital sander. The use of other types of powered sanders is prohibited due to the high potential for causing laminate damage. Use extreme care during topcoat and primer removal to prevent sanding into the laminate.

2.2.2.2 To scuff sand a composite surface for overcoating only use medium grade (Grade C) abrasive mats (A-A-58054) without powered tools for scuff sanding of painted composite surfaces. Fine (Grade B) or very fine (Grade A) abrasive mats may be used with an orbital sander. The abrasive mat can be wet with fresh water, or diluted cleaning compounds listed in Table 2-2 for light soils, to prevent clogging the pad.

2.2.3 Coating Removal on Metallic Surfaces. For areas of several square inches, paint may be removed using abrasive mats or flap brushes, taking care not to remove underlying metal. Chemical paint removal, may be used for areas larger than several square inches. Plastic media blasting or medium pressure water blasting, may be used at organizational levels of maintenance activities and depots to remove paint on equipment with panel skins thicker than 0.0625 inches (16 gauge).

2.2.4 Grinding. Grinding is normally accomplished with motorized grinding equipment and rubberized abrasive wheels, discs or abrasive belts. Grinding is normally used to remove heavy corrosion by wearing the corrosion away. Care should be taken with this corrosion removal process as sound metal is also removed with the corrosion product. The basic steps in grinding are:

2.2.4.1 Protect adjacent components from scale, chips, and corrosion products.

2.2.4.2 If grease or oil is present, clean areas with the appropriate cleaner(s) listed in this TO prior to mechanical removal operations. Ensure all oil and grease residues are removed before proceeding.

2.2.4.3 Remove paint and corrosion until a corrosion-free surface is reached. Continue grinding to remove coarse irregularities. Use fine abrasive paper to polish the surface to the desired finish.

2.2.4.4 Immediately apply the final protective paint or other corrosion preventive finish.

2.2.5 Wire Brushing.

WARNING

The use of goggles or face shield is mandatory when using motor driven wire brushes since corrosion particles can break loose and fly off. Conduct all painting operations only in an approved spray booth equipped with adequate ventilation and exhaust.

CAUTION

Do not use carbon steel or copper wire brushes on aluminum surfaces. Carbon steel or copper particles may become embedded in the aluminum causing galvanic corrosion to occur.

Wire brushing is a mechanical cleaning operation usually accomplished with a hand wire brush or a wire brush mounted on a motor driven wheel. By using different types of brushes, and various kinds, length, and gages of wire, a wide, range of mechanical cleaning actions are possible. Wire brushing is used to remove heavy corrosion and imbedded paint or dirt. A typical wire brushing procedure follows:

2.2.5.1 Protect adjacent components from scale, chips, and corrosion products.

2.2.5.2 If grease or oil is present, clean areas with the appropriate cleaner(s) listed in this TO prior to wire brushing operations. Ensure all oil and grease residues are removed before proceeding.

2.2.5.3 Remove loose corrosion with a hand scraper or pneumatic tools.

2.2.5.4 Wire brush area to a sound metal subsurface, ensuring all of the corrosion deposits are removed from the corrosion pits.

2.2.5.5 After mechanical cleaning and rework has been completed, a final surface treatment and/or protective paint finish, as listed in this TO, shall be applied as soon as possible.

2.2.6 High-Pressure Water (HPW) Paint Removal Method.

CAUTION

HPW paint removal system can cause severe damage to equipment and injury of personnel if instructions are not followed properly.

High-pressure water (40,000 PSI) paint removal is authorized for use at depot and field-level operations subject to meeting all personnel training, safety, and technical data requirements. HPW equipment is an excellent method for paint removal from support equipment. The HPW system can be used with or without blast abrasive such as bicarbonate of soda. These instructions are not intended to be all-inclusive, but are general guidelines to be used in conjunction with applicable system specific equipment manuals and/or a definitive process order.

2.2.6.1 Authorized HPW Equipment. This removal method requires the use of high-pressure water and may be used with a bicarbonate of soda injection system with control hoses, and handheld nozzles of various configurations. The injection system shall consist of a positive feed control system, such as an auger/computer controlled system. Only the equipment listed in Table 2-3 has been approved for Air Force use.

Table 2-3. Authorized HPW Equipment

Equipment	NSN	Notes
E75 Electric Unit	4940-01-438-7212	Aqua Miser water only unit, with 75 HP motor; includes rotary gun and 50 foot hose assembly.
D-115 Diesel Unit	4940-01-451-0022	Aqua Klean Centrifuge Unit, 115 HP diesel; 40,000 PSI with abrasive injection; includes rotary gun and 50 foot hose assembly.
E25M Electric Unit	4940-01-413-5627	Electric, 25 HP, Utilities required 30 SCFM at 100 PSI of compressed air, 6 GPM at 45 PSI clean fresh water, 70 AMP service of 460 volts, 60 cycle 3 phase electricity w/exact feed media controls.
E25M Electric Unit	4940-01-395-9471	Aqua Miser has controls, breaker box, and a computer to regulate the pressure of bicarbonate of soda; the computer gives the exact amount continuously without flexuating.
D44 Diesel Unit w/o Rotating Gun	4940-01-411-9826	Diesel, 44 HP, without Rotating Gun.
D44 Diesel Unit	4940-01-413-5629	Diesel, 44HP, 16-1/2 gal fuel tank, pressure feed media system with micro adjusted regulator. Utilities required 6 GPM at 45 PSI clean fresh water.
D44 Repair Kit Model 900-500	4940-01-411-9829	Repair Kit for D44 High Pressure Cleaner Unit.
B-25 Electric Unit	4940-01-451-0020	Least Expensive basic Aqua Miser unit. 25 HP electric unit without stainless steel enclosure; includes rotary gun, fan gun and 50 foot hose.
Trailer, Pressure Cleaner	4940-01-413-5602	Over the road trailer with lights to make high pressure cleaner unit portable.
Rotary Gun	Commercial Purchase	Contact the manufacturer for part number and information.
Bicarbonate of Soda Blast Media	5350-01-414-1894	Water, Soluble, Powder Form, 50 lb. bag.
Combo Foot Shin Guard	Commercial Purchase	Contact HPW equipment vendor directly for part number and ordering information.

2.2.6.2 Training Requirements. There are several types of training that can be used to properly train personnel in the proper use and safe operations of the HPW equipment and processes. Regardless of the training method, all personnel shall be properly trained prior to operating equipment.

2.2.6.2.1 Manufacturer Provided Training. The equipment manufacturer may provide on-site, video, or computer-based training for the safe operations of the equipment.

2.2.6.2.2 Locally Developed Training. A locally developed training program can be used for general instruction of equipment operation and safety requirements. This training should include hands-on practical training in HPW paint removal using all appropriate safety equipment.

WARNING

- High Pressure water can cause serious personal injury if the nozzles are directed at personnel. Never point the nozzle in the direction of other personnel.
- Water and blast media can create slippery conditions. Walking on top of equipment should be avoided. Use fall protection and all work stands shall have guardrails in place.

2.2.6.3 Personnel and Equipment Preparation Prior to HPW.

Prior to performing the HPW paint removal process, the following measures should be taken to ensure the safety of personnel and protection of the equipment to be depainted.

a. Defuel and disconnect the battery of the equipment to be depainted.

b. Ensure the SE seams, and crevices are protected from water intrusion/entrapment to prevent corrosion.

c. Remove and protect from the high-pressure water steam, all soft metal/non-metal components such as data plates, copper parts, hoses, etc.

d. All sources of ignition shall be kept a minimum of 50 feet way from the HPW paint removal process.

e. Personnel involved in the HPW process shall wear as a minimum earplugs, earmuffs, full-face shield, wet-weather gear, water-resistant hood, waterproof shoes, and shin and instep guard assemblies. The skin and instep assembly should be puncture resistant aluminum with a 5-inch wide by 6-inch long instep section attached by a hinge assembly to a shin section of at least 20-inches length.

2.2.6.4 HPW Paint Removal Operation.

HPW Paint removal operations can damage equipment and personnel if instructions and precautions are not followed. Following the requirements below are necessary to prevent damage:

a. The HPW equipment should have the operating parameters of water pressure not to exceed 40,000 PSI; water flow of 2.85 GPM, bicarbonate of soda blast media flow rate 1/4 to 1/2 lb. per minute.

b. The nozzle standoff distance should be within the range of 2 to 4 inches from the tip of the nozzle to the working surface.

c. The angle if incidence between the nozzle and the work surface should be within the range of 40 to 60 degrees from the surface being stripped.

d. The nozzle should be moved across the surface at a minimum rate of 4 inches every second.

CAUTION

Care should be taken in HPW paint removal operations to preclude blasting media intrusion and warpage of unsupported thin panels.

2.2.6.5 Post HPW Paint Removal Cleaning.

After completing the HPW paint removal process the following steps should be taken to ensure equipment is protected again flash rust and corrosion:

a. Remove any protective materials.

b. Areas where the coating was shielded from the HPW process should have paint mechanically or chemically removed per TO 1-1-8.

c. Open, inspect, and flush all areas where blast media may be entrapped with clean, fresh water.

d. The equipment or components should be thoroughly washed in accordance with Chapter 2 of this technical order.

e. Allow the equipment and/or components to thoroughly dry.

f. Prepare equipment and/or components for a coating system or treat with a Flash Rust Inhibitor such as Hold-Tight 102. Flash Rust inhibitors are temporary rust inhibitors that usually allow an additional 48-hour interval before priming without flash occurring.

NOTE

HPW Paint Removal will present a high potential for flash rusting on equipment. Ensure equipment is primed or treated with a Flash Rust Inhibitor within a maximum of 48 hours after paint removal.

CHAPTER 3
PAINTING, SEALING, CORROSION PREVENTIVE COMPOUND APPLICATION

3.1 GENERAL.

Operators may need to wear respiratory protective equipment when spray painting, or the area may need proper exhaust ventilation. USAF organizations that apply protective coatings will request initial and annual surveys by the local Bioenvironmental Engineer and Safety Officer. Their recommendations for complying with Air Force Occupational Safety and Health Standards (AFOSH) will be followed. Contractor personnel will comply with all Bioenvironmental Engineer, Safety Officer guidelines and Occupational Safety and Health Administration (OSHA) Standards.

3.2 DEFINITION OF EXPOSURE.

Exposure is defined as SE that is subjected to combined direct action of climatic elements (to include the interior of such units). Climatic elements include temperature extremes, humidity extremes, rain, hail, snow, sleet, salt-laden air, industrial atmospheres, direct solar radiation, dust and scouring action of wind-blown sand.

3.3 REQUIREMENTS FOR PAINTING - FIELD LEVEL.

NOTE

Flight Chiefs/Superintendents are authorized to make the determination if the unit requires complete repainting.

SE shall be repainted when painted surfaces have become bare or exposed because of paint deterioration or damage, or when it is determined that the equipment is inadequately protected from corrosion. Repainting of SE for purely cosmetic reasons is prohibited.

3.3.1 Complete Repainting Criteria. SE requires complete repainting when the coating system fails. A coating system is considered failed when over 75% of the total exterior surface displays obvious oxidation, bleaching, peeling, cracking, flaking, etc. When the coating system has failed it will be completely depainted and repainted by qualified personnel in accordance with the standard paint system in Table 3-1.

3.3.2 Abrasive Blasting. The most effective means of completely depainting and removing corrosion from SE is by mechanical means such as abrasive blasting using approved abrasive blasting dry media, water blasting, or water blasting with abrasive grit injected into the water stream. Plastic media blasting is effective in removing coatings and light surface corrosion from SE but will not effectively remove heavy corrosion. TO 1-1-691, Cleaning and Corrosion Prevention and Control Aerospace and Non-Aerospace Equipment, and TO 1-1-8, Application and Removal of Organic Coatings, Aerospace and Non-Aerospace Equipment, provides in depth guidance on abrasive blasting material selection and processes. Refer to these TOs for the effective development and execution of all SE abrasive blasting corrosion and coating removal programs.

3.3.2.1 Several coating systems require the complete coating removal and surface preparation to include a white metal or near white metal surface condition with a minimum of a 2 mil surface profile. This requirement can only be achieved through abrasive grit blasting or high pressure water blasting. Several high-pressure water blasting systems will allow the injection of abrasive grit into the water stream to achieve the required surface profile. Consult the equipment manufacturer's data sheet for additional guidance. Ensure the combination of abrasive grit and medium/high pressure water will not cause warping or other structural damage to SE and that this process is environmentally acceptable prior to the requisition of the abrasive blasting equipment.

3.3.2.1.1 Dry Media Abrasive Blasting for Iron and Steel. For complete coating and corrosion removal and surface preparation to include white metal or near white metal surface condition of iron and steel substrates (other than stainless steel), 0.063 (16 gauge, US Standard) or thicker, use abrasive blasting dry media PN: STARBLAST XL (Cage Code: 9Z037). Follow the manufacturer’s recommended equipment processes and procedures.

3.3.2.1.2 Dry Media Abrasive Blasting for Aluminum, Magnesium, Stainless Steel and Iron and Steel Less Than 0.063. For complete coating and corrosion removal and surface preparation to include white metal or near white metal surface condition of aluminum, magnesium, stainless steel alloys and for iron and steel substrates less than 0.063, use abrasive blasting dry media qualified to MIL-PRF-9954 (reference Table A-1).

3.3.2.2 Medium Pressure Water Blasting. Medium pressure water blasting, with operating pressures less than 40,000 PSI is also authorized for coating removal on SE. All requirements and safety considerations listed in abrasive blasting sections of TO 1-1-691 and TO 1-1-8 apply. Ensure the SE seams, and crevices are protected from water intrusion/entrapment to

prevent subsequent corrosion. Remove or protect from the high pressure water stream, all soft metal/non-metal components such as data plates, copper parts, hoses, etc.

3.3.2.2.1 The use of the optional variable speed drive for the medium pressure water blasting units is required if abrasive media will be introduced into the pressurized water stream.

3.3.2.2.2 Use the lowest effective water pressure when removing paint or when abrasive media is used in combination with the medium pressure water to remove corrosion.

CAUTION

- Care should be taken in coating removal preparation with all pressurize coating/corrosion removal processes to preclude blasting media intrusion and warpage of unsupported thin panels.

- Water blasting of equipment that has been primed with a chromate containing primer may allow leaching of the chromate into the waste water. Organizations shall gain approval from the appropriate environmental management office of primary responsibility prior to the commencement of water blasting activities.

3.3.2.3 Scuff Sand and Overcoat. If disassembly and complete mechanical removal is impractical within the organization, due to environmental constraints, the requirements of Table 3-1 for mechanical removal and application of the two layer zinc-rich primer (MIL-PRF-26915)/intermediate primer (MIL-DTL-53030), on ferrous alloys waived and replaced with MIL-DTL-53022, Type II. Aluminum, fiberglass, and stainless steel equipment and parts will not be coated with zinc-rich primer at any time.

3.3.2.3.1 Unless otherwise directed, bare aluminum parts and equipment shall be primed with MIL-PRF-23377, Type I, Class C.

3.3.2.3.2 All equipment receiving the scuff sand and overcoat type of maintenance painting, where bare metal is not exposed, may use the listed non-chromated tiecoats over existing MIL-PRF-85285 paint systems:

- MIL-PRF-23377, Type I, Class N
- MIL-DTL-53022
- 8010-01-482-8620, Aeroglaze 9741 (light gray) U/I KT
- 8010-01-483-4363, Aeroglaze 9743 (red) U/I KT
- 8010-01-483-4365, Aeroglaze 9744 (dark gray) U/I KT

3.3.3 Temporary Coating Repairs. For temporary repairs of chipped paint, use the appropriate CPC listed in paragraph 3.13. For more permanent repairs of small chipped areas, use authorized coating systems that are contained in items such as but not limited to: SEMPENS, Preval compressed air spray packs, Clip-Pacs, Brush and Roller, or AKZO Nobel Two-Component MIL-PRF-85285 Aerosol can. Single component aerosols, enamels or laquers are not authorized coatings. Information about these materials can be viewed on the AFCPCO website on the AF Portal. Larger defects in paint or damaged areas will be grounds to repaint the complete section as determined by Flight Chief or Superintendent.

3.3.3.1 Rust Converters. Rust converters typically consist of mixtures of phosphoric acid, organic alcohols, and tannates in a latex matrix that forms a protective film on the metal surface that protects against rust. They are designed to be applied directly to rusty surfaces to convert residual rust on steel surfaces to harmless and adherent chemical compounds. Unlike the standard scrape, prime, and paint regime, the surface does not require stripping to bare metal. Rust converters, topcoated with MIL-PRF-85285, serve as a 180-day temporary repair.

3.3.3.1.1 Recommended Rust Converter Products:

Neutra-Rust 661
8030-01-369-4416
8030-01-369-4417

Rust Trapper
Image 2000 (order by product Name)
P.O. Box 753
Ione, CA 95640

Rust Reformer (Rust-Oleum)
11 Hawthorn Parkway
Vernon Hills, IL 60061

Extend (Loctite)
32150 Just Imagine Drive
Avon, OH 44011

VpCI CorVerter (Cortec)
4119 White Bear Parkway
Saint Paul, MN 55110-7632

3.3.3.1.2 Lightly abrade the surface with a Scotch-brite pad, wire brush, sandpaper, or other equivalent material to remove loose rust only, leave adherent rust on surface; gently wipe abraded area with towel or cloth to remove dust and debris. Apply the rust converter in accordance with manufacturer's instructions. Apply a second coat if required.

3.3.3.1.3 After the rust converter has cured per the manufacturer's instruction apply a MIL-PRF-85285 topcoat. Repair area utilizing standard maintenance painting procedures as soon as possible.

3.3.4 Touch-up Primer. On steel surfaces, if the SE requires scuff sanding and overcoating and the prepared sur face is not exposed to bare metal, the use of non-chromated tie coat in lieu of zinc-rich primer is authorized. Zinc-rich primer will not adhere to painted surfaces nor provide corrosion protection unless the primer is in contact with properly prepared steel surfaces.

3.4 REQUIREMENTS FOR PAINTING - DEPOT LEVEL AND CONTRACTOR SUPPORT.

3.4.1 Corrosion Rework Determination. The extent of rework to be accomplished during overhaul will be determined by the Repair Contract. The decision on extent of corrosion repair will be determined by the government quality assurance personnel utilizing the requirements of this technical order.

3.4.1.1 When it is determined that corrosion is a significant factor, and total repaint of the unit is within economic repair, then disassembly, abrasive blasting, proper conversion coating of the substrate metals and application of the preferred paint system described in Table 3-1 will be accomplished. The lack of conversion coating capability or abrasive blasting capability by a contractor is not authority to deviate from the requirements.

3.4.1.2 When it is determined that corrosion is not a significant factor, or the units are not within economic repair limits, then paint touch-up will be accomplished. The paint material used in the touch-up should be the same material that is on the equipment unless otherwise specified. If the SE requires scuff sanding and overcoating and the prepared surface is not exposed to bare metal, the use of non-chrome tie coat in lieu of a primer is authorized.

3.4.2 Contractor Compliance. If contractor supported corrosion prevention and control is utilized, compliance with the proper coating cleaning, surface preparation, preservation, pretreatment, and painting requirements of this manual, TO 1-1-691, and TO 1-1-8 shall be included in the contractors' Statement of Work.

3.5 AUTHORIZED COLORS, SEMPENS, AND MATERIALS.

NOTE

It is possible to have slight variances in color. Equipment will not be repainted so as to have all equipment or components the same shade.

3.5.1 SE Standardized Colors. The Air Force has instituted a tone down program for SE. The standard color for all flight line SE is gray 26173 FED-STD-595, MIL-PRF-85285 (Type I Top Coat). The color change shall be integrated into the units' regular corrosion schedule and equipment will be aligned with the new scheme on an attrition basis. Newly manufactured or refurbished equipment will be painted gray 26173. Flight line support equipment being deployed to Southwest Asia will no longer be required to be painted tan. Mobile communication equipment will maintain its current color scheme to meet mission needs/requirements. The authorized colors for mobile communications equipment are green

FED-STD-595, color no. 24052/34052, light tan no. 33303, tan color no. 30279, and brown no. 20400, all FED-STD-595/ MIL-PRF-85285, Type I as preferred topcoat. This guidance does not apply to Basic Expeditionary Airfield Resources (BEAR) SE. All BEAR support equipment will be painted MIL-PRF-85285, Color 33446 (Tan).

3.5.1.1 SE metalized with 85/15% zinc/aluminum will remain in the original gray color without a topcoat applied.

3.5.2 SE Standard Topcoat. High solids polyurethane MIL-PRF-85285, Type I is the preferred standard SE top-coating material. There are three types of MIL-PRF-85285. Type I contains 420 grams/liter VOC, Type II contains 340 grams/ liter VOC and Type III is maximum 50 grams/liter VOC.

NOTE

Certain manufacturers of MIL-PRF-85285, Type III require their coating to have continual stirring during mixing operations. A continual stirring paint agitator is required to use with this material. Failure to constantly mix the Type III material will cause the material to expand and overflow from the mixing container.

3.5.2.1 The organization's equipment preparation capability, base, state, federal and overseas government environmental authorizations, and equipment material substrates will determine the coating system (primer and topcoat) used on specific SE. MIL-PRF-85285, Type II should only be used where environmental restrictions require topcoating materials containing less than 340 grams/liter VOC.

3.5.2.2 Table 3-1 identifies authorized coating materials for SE.

Table 3-1. Authorized Coating System

Coating System		Abrasive Blasting Required Yes	No	Primer	Topcoat	Remarks
1	Standard Primer and High Solids Polyurethane		X	MIL-PRF-23377, Type I, Class C or MIL-DTL-53022, Type I (bare or painted metal). Tie-coat primers cannot be used on bare metal surfaces) MIL-PRF-23377, Type I, Class N MIL-DTL-53022 8010-01-482-8620 Aeroglaze 9741 (light gray) 8010-01-483-4363 Aeroglaze 9743 (red) 8010-01-483-4365 Aeroglaze 9744 (dark gray)	MIL-PRF-85285, Type I	MIL-DTL-53022 is only suitable for use on bare ferrous alloys. It should not be used on bare aluminum alloys. MIL-PRF-23377 is suitable for use on bare ferrous and bare aluminum alloys. Either primer may be used as a tie-coat primer between the old and new topcoats on equipment undergoing scuff-sand and overcoat type maintenance painting.

Table 3-1. Authorized Coating System - Continued

Coating System		Abrasive Blasting Required Yes	No	Primer	Topcoat	Remarks
2	Two-Part Primer and Topcoat System	X		MIL-PRF-26915 and MIL-P-53030	MIL-PRF-85285, Type I	Coating systems for steel equipment based, or operating in, severe corrosion prone locations where environmental regulations allow topcoating. Use only paint spray equipment designed for the application of zinc-rich primer. Primers are applied "wet-to-wet" which means the MIL-P-53030 is applied directly over the MIL-PRF-26915 zinc-rich primer within 4 hours of completing the initial application of 1 wet coat of zinc-rich primer.
3	Chemical Agent Resistant Coating		X	MIL-DTL-53022, Type II or MIL-PRF-23377, Type I, Class C	MIL-DTL-64159	Three-part waterborne coating system, requires specialized application equipment. If unit is not to be deployed with the Army, use MIL-PRF-85285 topcoat.
4	Metalization 85/15% Zinc Aluminum Alloy Pure Aluminum 90/10% Aluminum/Aluminum Oxide	X		None	MAJCOM Option	Topcoating is not required
5	Polyurea, Aliphatic or Polyaspartic		X		Not Required	Specialized coating. High wear areas only.

3.5.2.3 Air Force will accept Chemical Resistant Coating (CARC) painted SE procured through US Army when it would increase the cost to change the coating to an epoxy/polyurethane coating system (MIL-PRF-23377/MIL-PRF-85285). If CARC painted equipment needs to be painted, the units shall refinish and maintain equipment using the appropriate coating system required for the assigned location/mission. This is to be accomplished only during the normal maintenance cycle.

3.5.3 Authorized Colors for Liquid Oxygen, Nitrogen. Storage Carts and Tanks. All liquid oxygen, liquid nitrogen servicing carts and storage tanks shall be finished in color schemes as follows:

3.5.3.1 Liquid oxygen servicing carts used on flight line shall have all of the control housing, interior and exterior, and cart frame shall be painted gray, Federal Standard 595, No. 26173.

3.5.3.2 Liquid nitrogen servicing carts used on flight line shall have all of the control-housing, interior and exterior shall be painted gray, Federal Standard 595, No. 26173.

3.5.3.3 Only 2000 and 5000-gallon liquid oxygen and nitrogen tanks not used on the flight line shall be painted white according to Federal Standard 595, No. 17925. All 50 and 400 gallon liquid oxygen and liquid nitrogen tanks will be painted per Federal Standard 595, No. 26173 for liquid oxygen and Federal Standard 595, No. 26173 for liquid nitrogen.

3.5.4 Passenger or Loading Ramps. Passenger or loading ramps may be painted white, Federal Standard 595, No. 17925. The steps and lettering shall be blue, Federal Standard 595, No. 15045, except those surfaces covered with anti-skid walkway coatings.

3.5.5 Presidential Support Equipment and USAF Demo Team. Presidential support equipment and the USAF Demo Team are authorized to deviate from the color and coating requirements of this technical order.

3.6 CORROSION TREATMENT FOR STEEL CABLES.

If the surface of a cable is corroded, relieve cable tension and carefully force the cable open by reverse twisting. Visually inspect the interior. Corrosion on the interior strands constitutes failure and the cable must be replaced. If no internal corrosion is detected, remove loose external rust and corrosion with a clean, dry, coarse-weave rag or fiber brush. Clean the control cables with a clean cloth dampened with A-A-59601, Type II or III or MIL-PRF-680, Type II or III degreasing solvent. After thorough cleaning, apply a thin film of either MIL-L-87177, Type I or II, Grade B, or MIL-PRF-16173, Class II, Grade 3 water displacing corrosion preventive compound (CPC) to the cable surface by aerosol spray or a cloth dampened with the CPC followed by a liberal application of MIL-PRF- 16173, Class II, Grade 4 CPC with a non-metallic brush. Wipe off any excess CPC. If excessive CPC is allowed to build up, it will interfere with the operation of cables at fairleads, pulleys, or grooved bell-crank areas.

3.7 PIANO TYPE HINGES.

Water displacing, corrosion inhibiting CPC are often applied to hinge pins and nodes to provide lubrication and to reduce corrosion problems. Unless otherwise directed by a specific system workcard, immediately after SE washing conclude, apply a coating of MIL-PRF-63460 or MIL-L-87177, Type I or II, Grade B to the piano hinge, hinge pins and nodes.

3.8 MATING SURFACES PROTECTION REQUIREMENTS.

To prevent corrosion between mating surfaces (faying or back to back surfaces of a part) on attaching parts, fasteners and panels, the metal surfaces shall be insulated with the proper primer following Paragraph 3.8.1 and Paragraph 3.8.2 or with sealant following the information in paragraphs and subparagraphs of Paragraph 3.8.3.

3.8.1 Mating Surfaces - Bare Steel. For clean bare steel alloys, except stainless steel, the primer will be the Organic Zinc-Rich Primer, MIL-PRF-26915 or MIL-DTL-53022, Type II. Spot or tack welding can be accomplished through the zinc-rich primer but not the MIL-DTL-53022. If the surface or part is already primed and the primer is intact, further coating of the mating surface is not required.

3.8.2 Mating Surfaces - All Other Metals. For nonferrous metals, the primer will be MIL-PRF-23377, Type I, Class C.

3.8.3 Sealers and Sealant Usage. Sealants prevent the intrusion of moisture, rain, salt water, dust and other fluids which can lead to extensive corrosion. Sealants are one of the most important tools for corrosion prevention and control.

3.8.3.1 Many sections of the SE contain joints and flanges. The use of an appropriate sealer to prevent the entry of water and contaminants into crevices and joints is an excellent way to minimize corrosion. Sealers can also be used to separate two conductive metal surfaces preventing galvanic or crevice corrosion.

3.8.3.2 For sealants to be effective, it is critical that the correct sealant be chosen for a specific area/situation and that it be applied correctly. TO 1-1-691 dedicates the entire Chapter 6 to the advanced selection and applications of sealants. Refer to that chapter if sealing conditions or requirements are encountered that are beyond the scope of this manual.

3.8.3.3 When repairs are made on equipment or accessories and/or components are installed or structures are reinstalled, the attaching or faying surfaces shall be protected by sealing all metal-to-metal and composite to metal contact surfaces. All permanent structures shall be installed with faying surfaces wet with MIL-PRF-81733, Type I or IV, Class 1 or 2, Grade A sealant. All removable structure such as access doors, inspection plates, floor panels and plates, and other removable panels (components requiring frequent removal for maintenance requirements) shall either be installed with faying surfaces wet

with AMS 3367, Class A or B or PR-1773, Class B sealant or Av-DEC™ HT3935-7 or HT3000FR sealant tape in the joints as specified by the system specific maintenance manual. In addition to faying surface sealing, fillet seal all interior seams and all exterior seams (those exposed to the outside environment) that would allow water intrusion using MIL-PRF-81733, Type II, Class 1 or 2, Grade A sealant.

NOTE

The following does not apply to parts that are lubricated in the joint areas immediately before or after installation, or to close tolerance bolts and parts that are removed frequently for maintenance requirements.

3.8.3.3.1 Attaching parts, such as nuts (standard, speed, and self-locking), bushings, spacers, washers, screws (standard and self-tapping), sleeves for shake-proof fastener studs, clamps, bolts, etc., do not need to be painted in detail except when dissimilar metal or wood contact is involved with the materials being joined or exposure to a corrosive interior environment or the exterior environment will occur in service. However, all parts shall be installed wet with sealant. For permanent installations, use MIL-PRF-81733, Type I or IV, Class 1 or 2, Grade A sealant and coat the entire mating surface of the parts. For removable installations, use SAE AMS 3367, Class A or PR-1773, Class B sealant and coat only the lower side of the heads of screws and bolts with sealant. For removable installations, do not coat the threads and shanks of screws and bolts or the holes into which they are inserted because this will make future removal almost impossible without damaging the parts. As an alternate for removable installations, the shanks, threads, and lower side of the heads of standard screws and bolts may be coated with MIL-PRF-63460, MIL-PRF-16173, Class II, Grade 3 before they are installed. Close tolerance bolts and parts shall be coated with corrosion inhibiting, solid film lubricant. Use MIL-L-23398 or MIL-PRF-46147 (air curing type) on aluminum parts and on all types of metallic parts. The solid film lubricant shall be applied and completely cured prior to assembly. Bolts shall be coated on shanks and threads only. A thin bead of sealant shall be applied under the bolt head to impart a wet seal.

3.8.3.3.2 All rivets shall be installed wet with MIL-PRF-81733, Type I or IV, Class 1 or 2, Grade A sealant. In fuel contact areas, the exposed rivet head and approximately 1/4-inch of the adjacent structure shall be brush over coated with SAE AMS-S-8802 Class A sealant.

3.8.3.3.3 All machine screws, countersunk fasteners, bolts (head end) and nuts which are used in contact with magnesium shall be installed with 5056 aluminum alloy washers. These parts, including the washers, shall be installed wet with MIL-PRF-81733, Type II, Class 1, Grade A sealant and shall be completely fillet sealed with the same material after installation.

3.8.3.3.4 Adjustable parts, such as tie rod ends and turnbuckles shall be installed as follows: (1) If possible, surfaces and threads shall be lubricated and protected before assembly with a film of MIL-L-23398 or MIL-PRF-46147 (air curing type) corrosion inhibiting, solid film lubricant which shall be completely cured prior to assembly. After installation, apply a thin coating of MIL-PRF-63460; MIL-PRF-16173, Class II, Grade 3; or MIL-PRF-81309, Type II, water displacing, corrosion preventive compound (CPC), to all surfaces of these parts. (2) If solid film lubricants cannot be applied, use a thin coating of MIL-PRF-63460; MIL-PRF-16173, Class II, Grade 3; or MIL-PRF-81309, Type II water displacing, corrosion preventive compound (CPC) after assembly.

3.8.3.3.5 When practical, slip fit parts shall be assembled with mating surfaces wet with MIL-PRF-81733, Type I or IV, Class 1 or 2, Grade A sealant. If this process is not practical, coat the interior diameter (ID) of the holes in the receiving part, which is normally the larger structure with a corrosion inhibiting, solid film lubricant conforming to MIL-L-23398 or MIL-PRF-46147 (air curing types) and the outer diameter (OD) of the mating part with one conforming to MIL-L-23398 or MIL-PRF-46147 (air curing types). The solid film lubricant shall be applied and completely cured prior to assembly.

3.8.3.3.6 All cut edges and holes drilled or reworked for bolts, screws, rivets, studs, and bushings of aluminum alloy structures or parts shall receive a chemical conversion coating treatment prior to the installation of the fasteners or bushings and prior to installing or refinishing the structure or parts. Apply a conversion coating to aluminum surfaces, using Touch-N-Prep pen containing Alodine™ 1132. On steel surfaces use the appropriate primer to coat the cut edges of holes prior to reinstallation of the parts.

3.8.3.4 Sealant may be applied by brush, spatula, or caulking gun application.

3.8.3.5 To prevent sealant from contacting adjacent areas during application and smoothout, outline the areas being sealed with masking tape (AMS-T-21595, Type I) so that each tape strip is 1/8 to 1/4 inch from the edge of the seams.

3.8.3.5.1 Apply the sealant between tapes with a nonmetallic spatula or spreader, brush or caulking gun. Avoid the entrapment of air. Work sealant into recesses by sliding the edge of the spatula firmly back over the recesses. Smoothing will be easier if the nonmetallic spatula is first dipped in water.

3.8.3.5.2 Remove masking tape after the sealant has been applied and before it begins to set. Cure time will depend upon the application life of the materials used.

3.8.3.6 Sealant application life and cure times are dependent on environmental considerations and the formulation cure times. The application life of a sealant is the length of time that a mixed sealing compound remains usable at 75 °F (24 °C) and 50 percent relative humidity. This time (in hours), known as a dash number, is denoted as the last number in a sealant designation (e.g. MIL-PRF-81733, Type II, has an application life of two hours). For each 18 °F (10 °C) increase in the temperature above 75 °F (24 °C), the application time is cut by approximately half with a similar reduction in tack free and cure time. When sealants are applied in an environment where the relative humidity is greater than 50 percent, its application life is shortened to some degree. Maintenance personnel should be aware of the effects of temperature and humidity on the application life of a sealant. Mix only the amount of material that can be applied during the rated work life of the sealant.

3.8.3.7 There are sealants that can damage SE. For example Room Temperature Vulcanizing (RTV) Adhesive/Sealant, MIL-A-46106, unless it is called-out for a specific repair, should not be used in sealing metal parts. This sealant evolves acetic acid during its curing process and can cause corrosion when sealing metals or when sealing non-metals in a confined metallic lined space. The approved qualified product for use is MIL-A-46146 (non-corrosive). Both sealants are packaged alike and are often substituted within the base supply system. A telltale odor of vinegar identifies the acetic acid (corrosive version) evolving is being used.

3.8.3.8 Remove sealant with a non-metallic scraper, such as plastic or phenolic. The Pneumatic Vibro Gun Sealant Removal Kit or Rapid Desealing System (RDS) may also be used (Refer to Table A-1). Clean remaining residue from the component or structure using undiluted Acrastrip 600 or SkyKleen® 1000.

3.9 ACOUSTICAL MATERIAL PRECAUTIONS.

Most of the acoustical material used in powered SE is open cell polyurethane foam. The property of open cell polyurethane that results in the reduction of sound also results in the foam holding water and water vapor like a sponge. In severe corrosion prone areas, the foam also absorbs the contaminates in the water vapor such as salt. The water vapor is slow to dry and will be sufficient to cause and accelerate corrosion. Additionally, as the water vapor evaporates it will leave the contaminates lodged in the foam against the metal surfaces and over time the concentration of the contaminates will worsen the corrosive effects. To prevent corrosion that will occur from the open cell polyurethane, field units are authorized to remove existing foam and replace with Coustifoam PUI or AF (heat reflective) or equivalent.

3.9.1 Coustifoam PUI and AF. The Coustifoam PUI and AF is also an open cell polyurethane foam but the side that has the vapor/waterproof backing shall be installed against the metal panels. This action will help prevent fluid transfer to the metal surfaces of the equipment where the foam is mounted. All exposed edges, tears, and perforations of the foam will be sealed prior to installation. Sealing can be accomplished by brushing the edge with MIL-PRF-81733 or equivalent sealant. The sealant shall also be used to repair any tear or puncture in the polyvinylfluoride film that are made to accommodate fastener installation.

3.9.2 Nonmetallic Fasteners. Nonmetallic fasteners shall be used to mount the foam in the SE. Corrosion inhibiting sealant, MIL-PRF-81733 or PR-1733 shall be applied around the fastener head and the fastener shank, which protrudes through the equipment structure/skin, thoroughly sealing the fastener hole to prevent water intrusion. Do not apply sealant to threaded portions of the fasteners.

3.10 DRAINAGE.

3.10.1 Fluid Collection Points. Angles, channels, panel lips, hand rail holders, or other pockets that can collect water will be avoided or have adequate drainage when stored in the equipment's normal position, see Figure 3-1.

3.10.2 Modifying Fluid Collection Points. Sealants such as MIL-PRF-81733 or self leveling sealing compounds such as Zip Chem HT3326-5-50 or TF2219 or equivalent may be used to fill voids and entrapped areas, redirecting the water to the appropriate drain-through-drain-to location. The minimum size for any drain hole is 0.25 inch.

Figure 3-1. Example of Standing Water Due to Inadequate Drainage Provisions

3.11 MAINTENANCE STAND RAILS AND RAIL HOLDERS.

WARNING

Do not drill drain holes in weldments seams or beads.

NOTE

Using activities that find standing or entrapped water in equipment due to the lack of drainage should forward this information to the responsible equipment specialist or system engineer for action through Material Deficiency Reporting channels as outlined in TO 00-35D-54.

3.11.1 Drain Holes. Field units are authorized to drill necessary drain holes at the lowest point on the maintenance stands rail holders to avoid water from collecting in the holders.

3.11.2 Drain Hole Corrosion Prevention and Treatment. Paint the edges of the drain holes after drilling to prevent corrosion from occurring around the holes.

3.11.2.1 Since repeated installation and removal of the rail into the rail holder will result in damage to the paint on both items, additional protection is required on the ID of the holder and the OD of the bottom part of the rail.

3.11.2.2 Coat the ID of the rail holder and the bottom part of the stand rail that are inserted into the holder with solid film lubricant conforming to MIL-L-23398 or MIL-PRF-46147 (air curing types). The solid film lubricant shall be applied and completely cured prior to assembly.

3.11.2.3 To prevent corrosion, CPC, MIL-PRF-16173, Grade 4, or MIL-PRF-81309, Type II should be applied periodically to the exterior bottom of the rail and interior of the holder and the interior of the stand rails. Use the appropriate length 360 degree FORMIT® spray wand or equivalent to apply CPC through the drain holes the entire length of the stand rails.

3.12 HOLLOW STRUCTURAL MEMBERS.

3.12.1 Drainage for Closed Hollow Members, When Open Drain Holes are Possible. A completely air tight weld is required for closed hollow members to prevent condensation of moisture in the interior surface. To prevent moisture accumulation from occurring (since it is difficult to obtain perfect welds), all closed hollow members will have drainage provisions at the lowest drain-through-drain-to point of the member, reference Figure 3-2.

3.12.1.1 For horizontal members, drain hole(s) will be provided on the lower side equally spaced across the hollow member at an approximately thirty-six inch interval.

3.12.1.2 For vertical members, drain hole(s) will be provided on bottom end-cap.

3.12.2 Drainage for Closed Hollow Members, When Open Drain Holes are Not Possible. If a drain hole is not possible due to design (such as a butt joint with a plate behind it or two pipes forming a saddle joint) then a drain hole should be placed at the lowest possible drain-through-drain-to point, see Figure 3-3. Application of sealant that is formed to direct the drainage to the drain hole is authorized to facilitate fluid drainage.

3.12.2.1 The drain hole should not penetrate a weld and must be approved by the responsible engineering organization. Since the location of the drain hole could allow water inside the hollow member insert a removable plug (weld-nut) into the drain hole. Preferred size of the hole for the weld-nut is 0.50 inch, minimum size is 0.375 inch. Length will be as determined by the hollow member wall thickness. A suggested source of supply for the weld nuts is available from the Molly Division of USM Corp., 504 Mt. Laurel Avenue, Temple, Pennsylvania 19560 or any Chevrolet Truck Parts Department.

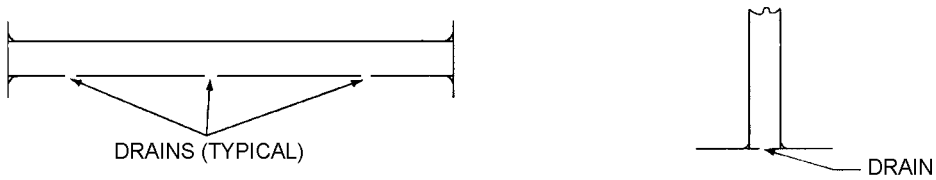

Figure 3-2. Hollow Member Drain Hole Configuration

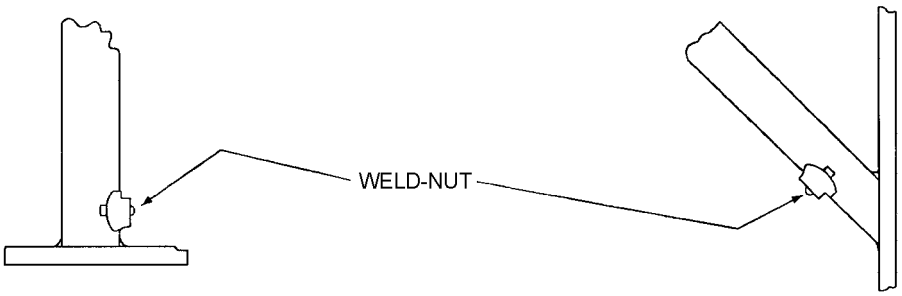

Figure 3-3. Hollow Member Weld-Nut Configuration

3.12.2.2 Weld nuts should be removed periodically so the hollow member can be checked for water accumulation and condition of the corrosion prevention compound. If water has to be drained, completely dry the area and reapply the appropriate CPC the entire length of the hollow member. After a period of two to three years the rubber may compress in the hole, if this occurs remove the screw, cut the weld-nut flush with the surface, punch the remainder of the nut inside the hollow member and install a new weld-nut.

3.13 CORROSION PREVENTIVE COMPOUNDS (CPC).

Corrosion Preventive Compounds (CPC) are used for temporary protection of painted and unpainted surfaces and where coating system has been damaged or removed. CPC's function by preventing corrosive materials from contacting and corroding bare metal surfaces. Some of the compounds have the capability of displacing moisture in seams, joints and faying surfaces. Some CPC's also provide lubrication as well as corrosion protection. The thicker CPC's provide the best corrosion protection, are longer lasting, and more difficult to remove. The thinner materials provide some lubrication and do not crack; chip or peel but must be removed and replaced. The protection provided is temporary, so the compound must be reapplied periodically and after removal by washing or contact with solvents or fuel. The recommended maximum frequency of application is based on the corrosion severity of the operational environment. The frequency of application can be set to coincide with wash cycles and periodic inspections, but should not be extended. These compounds should not be considered as a long-term alternative for proper painting. The CPCs should not be applied at temperatures above 95 °F or below 50 °F. A brief description of authorized CPC's are listed below.

3.13.1 MIL-PRF-81309.

WARNING

CPC shall not be used on or adjacent to oxygen lines, fittings or equipment. The compound shall not be used on surfaces where temperatures exceed 300 °F. Failure to comply may result in fire hazard.

CAUTION

Corrosion Preventive Compounds (CPC) can be separated into two major categories: water displacing and non-water displacing compounds (refer to TO 1-1-691). Some CPC's have a flash point above 100 °F, but contain flammable solvents. These compounds should be handled, stored, and applied in accordance with manufacturer's instructions and the product Material Safety Data Sheet (MSDS).

MIL-PRF-81309 (CPC Water Displacing Ultra Thin Film) is a general-purpose corrosion preventive compound that can be used whenever a CPC or a water-displacing compound is called for but no specification is referenced. MIL-PRF-81309 materials are excellent water displacing compounds that provide an ultra thin, soft protective film (0.5-mil or less). The specification covers two types, both of which can be applied by dipping, spraying, brushing, or an aerosol container. They provide temporary protection from corrosion and are easily removable with a solvent. The two types primarily in used for SE are Types II and III.

a. Type II. A soft, thin film for general use, particularly on moving or sliding parts where some lubrication is needed, such as hinges or bomb racks. It may be washed away by rain or wash procedures. Type II shall be used to protect areas which cannot be properly drained or contain recesses that are particularly difficult to reach.

b. Type III. An ultra thin, soft film primarily for use on avionics and electronic equipment. Although this coating is nonconductive, it will allow electrical contact because it is soft and very thin. Do not use MIL-PRF-16173, Grade 3 as a substitute.

3.13.2 MIL-DTL-85054. MIL-DTL-85054 CPC is a water displacing CPC that forms a clear, dry, flexible film. It is intended for use as a protective coating until painting is practical. Because of its paint-like characteristics, this CPC does not provide any lubrication. It can be applied by dipping, brushing, spraying, or from aerosol containers. However, dipping provides a very thin coating with less corrosion protection. After each use of an aerosol can, invert the can and spray until spray tip (nozzle) is clear of entrapped material. If an aerosol can does not spray, invert and depress the spray tip several times to clear the delivery tube and spray head. If the can still does not spray, remove and clean the plastic spray head then spray again to clear the delivery tube. Since MIL-DTL-85054 buildup is difficult to remove, especially after prolonged exposure to direct sunlight, previously applied coatings should be removed with MIL-PRF-680, Type II or III (CID A-A-59601), before reapplication.

3.13.3 MIL-PRF-16173 CPC Solvent Cutback, Cold Application. MIL-PRF-16173, Class 2, covers five different grades of CPCs that can be applied by brushing or dipping. Grades 1, 2, 4, and 5 do not displace water and must be applied to dried surfaces or to surfaces that have been treated with MIL-PRF-81309. Grade 3 is a water displacing soft film, but is not a substitute for MIL-PRF-81309. All five grades are very effective in preventing corrosion. As a soft film CPC, care must be taken to ensure dirt and other contaminants do not collect on the soft CPC surface for extended periods of time.

a. Grade 1. Is a thick hard, black CPC that is difficult to remove. However, it offers the most corrosion protection of all the CPCs indoors and outdoors and may be used at temperatures down to 0 °F.

b. Grade 2. A thick, soft, grease-like, brown CPC that remains tacky and can be removed with mineral spirits or dry cleaning solvent. It protects under relatively severe conditions and, given adequate maintenance touch-up as necessary, can be used for most maximum protection requirement. It may be used at temperatures down to -40 °F.

c. Grade 3. A thin, soft film CPC. MIL-PRF-81309, Type III can be used as a substitute for MIL-PRF-16173; however, MIL-PRF-16173 cannot be used as a substitute for MIL-PRF-81309.

d. Grade 4. A thin, non-tacky, semitransparent film through which identification can be read. It may be used at temperatures down to -40 °F.

e. Grade 5. A soft film CPC removable using low pressure steam.

3.13.4 MIL-PRF-63460 Lubricant, Cleaner, and Preservative for Weapons and Weapon Systems. MIL-PRF-63640 is a thin, water displacing, protective, penetrating lubricant used for cleaning, lubrication and preservation of components. This material has good lubricating properties between -65° and 105 °F (-54° and 41 °C). It may be applied by brushing, dipping, or spraying.

3.13.5 MIL-L-87177 Lubricants, Water Displacing. MIL-L-87177 covers several types and grades of a synthetic, water displacing lubricant that has shown excellent corrosion preventive qualities, especially on electrical contacts, contact pins, electrical quick disconnect connectors, etc. There are two types and grades. Type I, Grade B is a water displacing lubricant with an added corrosion inhibitor. Grade B is the preferred material for use on SE electrical contacts and connectors.

3.13.6 CPC Methods of Application. CPCs can be applied by brushing, dipping, or spraying. The area of application, viscosity of the CPC and the conditions under which the CPC need to be applied are factors which determine which methods of application to use. Use of the FORMIT® extension wand applicator, or equivalent, may be used to fog the thinner version of CPCs inside drain holes or other access areas.

3.14 CPC APPLICATION ON FERROUS ALLOYS.

Clean the surfaces per Chapter 2. Apply by brush, dip, or spray. For hard to reach recesses, field organizations, utilizing spray wands, aerosol extension applicator such as the FORMIT® extension applicators, or equivalent devices, to fog or spray the CPC MIL-PRF-16173, Grade 4 or Zip Chem, ZC-010 (MIL-PRF-81309 Type 2), onto the interior surfaces of the hollow members. Fully insert the FORMIT® 360 degree extension wands, or equivalent applicators, into the drain hole and slowly withdraw the spray wand while applying the CPC to the interior of the hollow member. Repeat this process for each drain hole ensuring complete coverage between drain holes. Depot overhaul or contractor maintenance shall condition the interior of the hollow members with an iron phosphate pretreatment per TT-C-490, Type II, then apply the CPC as above.

3.15 CPC APPLICATION ON OTHER ALLOYS.

Clean the surfaces per Chapter 2. Field organizations shall utilize spray wands, FORMIT® 360 degree extension wands,

or equivalent devices, to fog or spray the CPC MIL-PRF-16173, Grade 4 or (MIL-PRF-81309 Type II), onto the interior surfaces of the hollow members ensuring complete interior coverage. Depot overhaul or contractor maintenance shall condition the interior of aluminum hollow members per TO 1-1-691 with a chromate conversion coating per MIL-DTL-5541, Class 1A or anodize per MIL-A-8625, Type II or III. The specific treatment shall depend on the alloy. Apply the appropriate CPC, as above, after the pretreatment operations.

3.16 COATING APPLICATIONS.

3.16.1 Material Selection. To provide optimum protection from deterioration and corrosion, the proper coating system (a combination of cleaning, pretreatment, priming and topcoat) must be selected for a specific application. See Table 3-1 for authorized coating systems. Table 3-2 is a brief abstract of the priming and painting functions necessary to maintain the coating systems on SE.

Table 3-2. Pretreatment Instructions

Material	Finish Process
A. FERROUS ALLOYS other than stainless steel, mill-galvanized or mill-electrozinc coating, or mill-aluminized surfaces.	1. Chemically clean the areas in accordance with Chapter 3. Remove all remaining coating and corrosion by abrasive blasting or other mechanical cleaning processes. Field organizations without abrasive blasting capabilities may proceed to Step 3. Depot and/or contractor level of maintenance apply zinc phosphate TT-C-490, Type I. 2. The blasted surfaces will be in a near-white condition per Steel Structures Painting Council (SSPC-SP 10). A near-white blast cleaned surface finish is defined as one from which all oil, grease, dirt, mill scale, rust, corrosion products, oxides, paint or other foreign matter have been completely removed from the surface except for very light shadows, very slight streaks, or slight discolorations caused by rust stain, mill scale oxides, or slight, tight residues of paint or coating that may remain. At least 95% of each square inch of surface area shall be free of all visible residues, and the remainder shall be limited to the light discoloration mentioned above. The National Association of Corrosion Engineers (NACE) Standard TM-01-70 (Visual Standard for Surfaces of New Steel Airblast Cleaned with Sand Abrasive) surface was produced as a visual standard to compare properly prepared surfaces. The Standard may be procured from NACE International, 440 South Creek Drive, Houston, TX 77084-4906. The blast-cleaned surface must be primed before any rusting occurs, otherwise the benefit of the near-white blast cleaning is lost. Under normal atmospheric conditions it is best practice to prime within one hour of blast cleaning. The following areas are exceptions to blasting: a. Abrasive blasting will not be performed on surfaces where there is a danger of warping or distorting the base metal. Sheet metal thinner than 0.0625 inch (U.S. Standard 16 gauge) will not be abrasive blasted. b. Parts whose dimensions must be retained or parts with deep crevices, threads, or machined surfaces will not be abrasive blasted. c. Heavy cast iron or tempered steel components such as engines, transmissions, gearboxes, differentials, leaf or coil springs, etc., shall not be abrasively blasted. d. Working surfaces that are to be lubricated.

Table 3-2. Pretreatment Instructions

Material	Finish Process
A. FERROUS ALLOYS other than stainless steel, mill-galvanized or mill-electrozinc coating, or mill-aluminized surfaces. (Continued)	3. Primer - The preferred coating system over abrasive blasted ferrous alloys is a zinc-rich primer and intermediate primer system. The primers will be applied in a “wet-to-wet” process. The basecoat zinc-rich primer, (MIL-PRF-26915) is applied and the intermediate primer (MIL-DTL-53030) is applied shortly thereafter over the zinc-rich primer. Follow the coating manufacturers' application instructions for the mixing, delays between the primer application and the required application equipment. The base coat zinc-rich primer shall conform to MIL-PRF-26915. Dry film thickness of the zinc-rich primer should be 2.0 - 2.5 mils. The intermediate primer shall conform to MIL-DTL-53030. Dry film thickness for MIL-DTL-53030 shall be 0.9 to 1.1 mils. If the surface is not reconditioned to bare metal, the use of a non-chromate tie-coat is recommended. Apply MIL-PRF-23377, Type I, Class N or MIL-DTL-53022, Type II over the areas to be painted. 4. Topcoat - Paint with one coat of MIL-PRF-85285, Type I applied to a dry film thickness of 1.6 to 2.4 mils.
B. STAINLESS STEEL AND NICKEL BASE ALLOYS.	1. Most stainless steel surfaces do not require finishing. If there are requirements in the equipment specific technical order to coat stainless steel, and the technical order provided the coating procedures those instructions shall take precedence. If no instructions are available and coatings are required use the following application processes. 2. Clean in accordance with Chapter 2, if the surface remains contaminated refer to TO 1-1-691. 3. Passivate the surface in accordance with SAE-AMS-QQ-P-35 (Depot or Contractor levels of maintenance only). 4. Primer - MIL-DTL-53022, Type II (Lead and Chromate Free, Epoxy Primer). Allow the primer to dry. Dry film thickness for MIL-DTL-53022, Type II primed surfaces shall be 0.9 to 1.1 mils. 5. Finish - Paint with one coat of MIL-PRF-85285 applied to a dry film thickness of 1.6 to 2.4 mils. Total dry film thickness of all coatings: MIL-DTL-53022, Type II primed surfaces shall be 2.5 to 3.5 mils.
C. MAGNESIUM ALLOYS.	1. Clean in accordance with Chapter 2, if the surface remains contaminated refer to TO 1-1-691. 2. Pretreat with dichromate film per SAE-AMS-M-3171, Type III. 3. Primer - Prime with one coat of epoxy primer, MIL-PRF-23377, Type I, Class 2. Dry film thickness for MIL-PRF-23377 primed surfaces shall be 0.6 to 0.8 mils. 4. Finish - Finish with one coat of MIL-PRF-85285 applied to a dry film thickness of 1.6 to 2.4 mils. Total dry film thickness of all coatings: MIL-PRF-23377 primed surfaces shall be 2.2 to 3.2 mils.

Table 3-2. Pretreatment Instructions - Continued

Material	Finish Process
D. CADMIUM OR ZINC PLATED SURFACES, mill-galvanized, mill-electro-zinc coated.	1. Clean in accordance with Chapter 2. 2. Pretreat by applying MIL-C-17711 (Depot and/or contractors only). 3. Primer - Prime with one coat of epoxy primer, MIL-PRF-23377, Type I, Class 2, or MIL-DTL-53022, Type II (Lead and Chromate Free, Epoxy Primer). Dry film thickness for MIL-PRF-23377 primed surfaces shall be 0.6 to 0.8 mils, dry film thickness for MIL-DTL-53022, Type II primed surfaces shall be 0.9 to 1.1 mils. 4. Finish - Finish with one coat of MIL-PRF-85285 applied to a dry film thickness of 1.6 to 2.4 mils. Total dry film thickness of all coatings: MIL-PRF-23377 shall be 2.2 to 3.2 mils; total dry film thickness for MIL-DTL-53022, Type II primed surfaces shall be 2.5 to 3.5 mils.
E. MILL-ALUMINUM STOCK.	1. Clean in accordance with Chapter 2. 2. Pretreat with MIL-DTL-5541, Class 1A or Anodize per MIL-A-8625 Type II or III (Depot or contractors only) per TO 1-1-691. 3. Primer - Prime with one coat of epoxy primer, MIL-PRF- 23377, Type I, Class C. Dry film thickness for MIL-PRF-23377 primed surfaces shall be 0.6 to 0.8 mils. 4. Finish - Finish with one coat of MIL-PRF-85285 applied to a dry film thickness of 1.6 to 2.4 mils. Total dry film thickness of all coatings for MIL-PRF-23377; total dry film thickness for MIL-DTL-53022, Type II primed surfaces shall be 2.5 to 3.5 mils.

3.16.2 SE Surface Preparation Categories. SE surface preparation for painting operations fall into four general categories:

a. Paint removal (removal of old coating system).

b. Cleaning.

c. Corrosion removal and prepaint treatment.

d. Prime and topcoat.

3.16.3 Organic Zinc-Rich Primer.

NOTE

For specific information not covered in this technical order consult TO 1-1-691 and TO 1-1-8 regarding more specific instructions on depainting, corrosion treatment, prepaint treatments and coating application procedures.

For abrasive blasted ferrous alloys the preferred finish system consists of a organic zinc-rich primer and a chrome and lead free, low VOC, MIL-DTL-53030, intermediate primer over the organic, zinc-rich primer and a polyurethane MIL-PRF-85285, Type I topcoat. The following information is designed to assist in the application of the zinc-rich primer and polyurethane topcoat.

3.16.3.1 The MIL-PRF-26915 will be stock listed and a QPL/QPD is being established. Until such time that a QPL/QPD is available, one of the organic zinc-rich primers in Paragraph 3.16.3.2 is authorized. If the zinc-rich primer sprayed surface exhibits roughness, the application of the intermediate primer, MIL-P-53030 shall be used as a intermediate coat to provide additional corrosion protection, an improve topcoat appearance, and prevent minute zinc oxide spotting normally associated with zinc-rich primers. If the intermediate primer is required, utilize the 3-part coating system identified in Table 3-1, coating system 5.

3.16.3.2 Approved alternates until the QPL/QPD for MIL-PRF-26915 is published:

a. Deft 44 GY-16, zinc-rich water reducible epoxy polyamide primer

DEFT Inc.
17451 Von Karman Ave
Irvine, CA 92614

b. Azko Nobel 10P3-2

Akzo Nobel Aerospace Coatings
1 East Water Street
Waukegan, IL 60085

c. Amercoat 68A

Ameron
Industrial Coatings Division
P.O. Box 2153
16116 East 13th Street
Wichita, KS 67201

d. ZRC® 350

ZRC
145 Enterprise Dr.
Marshfield MA 02050

3.16.3.3 The zinc-rich primer should be constantly mixed during application to obtain a homogenous even applied film. Constant agitation will prevent the heavy zinc pigment from settling to the bottom of the spray pot/cup that would cause the spray gun to surge or apply uneven levels of the zinc pigment to the SE surfaces. A heavy buildup of the zinc pigment will result in a weak porous film.

3.16.3.4 The wet film thickness required to achieve a dry film thickness of 2.0 to 2.5 mils is dependent upon the volume of solids content and amount of thinner used. zinc-rich primers usually have about 72% volume of solids so a wet film thickness of 3.0 to 4.0 mils should result in the desired dry film thickness.

NOTE

Applicators will confirm the correct dry film thickness with a dry film thickness tester that is capable of measuring multi-levels of coatings.

3.16.3.5 Primer overspray (a deposit of loose dusty coating on the primer surface) can be a major problem when topcoating zinc-rich primers. Like other surface contaminants, overspray hinders topcoat wetting and provides a poor anchor for paint. The overspray can be removed from the primer by rubbing the surface with a clean bristle brush and then blowing off all loose particles with oil free, dry compressed air.

3.16.3.6 Zinc-rich primer surfaces, because of their porosity are readily contaminated by oil, dirt or atmospheric pollutants; therefore primed equipment should remain indoors in a controlled environment until topcoated.

NOTE

Use only paint spray equipment designed, or modified, for zinc-rich primer application. Failure to do otherwise will allow the zinc-rich primer to collect on the needle and air cap or settle to the bottom of the paint spray cup rendering the spray equipment inoperative.

3.16.3.7 When applying the intermediate primer, application shall be wet-to-wet. Wet-to-wet means at the completion of the first coat of zinc-rich primer, MIL-PRF-26915, a coat of intermediate primer, MIL-P-53030 is applied directly over the zinc-rich primer before the base primer is dry. Both systems are then allowed to dry completely before topcoat applications.

3.16.3.8 Follow the manufacturer's application data sheet for all coating thinning, application, and curing data.

3.16.3.9 If the zinc-rich primer cannot be topcoated within 48 hours, activation of the surface may be necessary. This can be accomplished by lightly wiping the surface with a scotch-brite pad, A-A-58054, Type I, Grade A, dampened with MIL-PRF-87937 diluted to manufacturer's instructions. After wiping with cleaner, wipe the surface with clean cloth dampened with water and dry with clean cloth.

3.16.4 MIL-PRF-85285 Polyurethane, Type I. The standard topcoat used on SE is MIL-PRF-85285, High Solids Polyurethane, Type I. This section is relative to coating touch-up operations for that topcoat. The selection of polyurethane paint, MIL-PRF-85285, by field, depot, and contractor operations, is restricted to only those companies who have been qualified to the performance specification. Those vendors are listed on Qualified Products Database, QPD-85285. To download the latest version of current specifications, handbooks, or QPL/QPD use the Defense Logistics Agency Specification search engine (http://assist.daps.dla.mil/quicksearch) or visit the Air Force Corrosion Prevention and Control Office website located on the AF Portal.

3.16.5 Thermal Spray Coating Systems.

NOTE

When polyurethane is applied below 40 percent relative humidity and/or 60 °F, the cure time is appreciably lengthened. The coating application range for MIL-PRF-85285 is relative humidity 20 to 80 percent and ambient temperature 50 to 90 °F.

There are several methods of thermally spraying metal alloys. For coating large pieces of SE, the most commonly used equipment in the Air Force is dual metal wire electric arc

spray. The equipment recommended should be for high, field and depot level production levels. Organizations may use the Thermion 500 and the Thermion Bridgemaster or equivalent systems for metalizing operations. Thermion equipment may be procured from Thermion Metalizing System, Ltd., P.O. Box 2136, Silverdale, WA 98383-2136. Table 3-3 lists currently authorized metalization materials and preferred sources of supply.

Table 3-3. Metalization Material Sources of Supply

Material	Use	Source of Supply
85/15% zinc/aluminum alloy	Best overall general purpose corrosion protection on abrasive blasted carbon steel surfaces.	The Platt Brothers & Company P.O. Box 1030 Waterbury, CT 06271 AUFHAUSER Corporation 39 West Mall Plainview, NY 11803
100% aluminum	For coating hot sections of equipment, mufflers, and aluminum equipment.	Alcotec Wire Corporation 2760 Aero Park Dr. Traverse City, MI 49686 AUFHAUSER Corporation 39 West Mall Plainview, NY 11803
90/10% aluminum/aluminum oxide alloy	For the application of a tough durable, long-term anti-slip coating to steel and aluminum surfaces.	Alcotec Wire Corporation 2760 Aero Park Dr. Traverse City, MI 49686 AUFHAUSER Corporation 39 West Mall Plainview, NY 11803
100% zinc	Excellent corrosion protection except in seawater immersion conditions.	The Platt Brothers & Company P.O. Box 1030 Waterbury, CT 06271 AUFHAUSER Corporation 39 West Mall Plainview, NY 11803

3.16.5.1 Metalization Process Metal Wire Arc Spray (MWAS). MWAS is a thermally sprayed, sacrificial metalized coating for effective protection of structural iron and steel in corrosive environments. For ferrous metal surfaces, other than stainless/corrosion resistant steel, 85/15% zinc/aluminum alloy wire has shown the widest application and corrosion protection latitude. 85/15% zinc alloy, 1/8-inch diameter is the common wire diameter. Organizations may use this alloy for all application on properly prepared ferrous metals over 1/8-inch thick, except stainless/corrosion resistant steel alloys. For aluminum equipment or ferrous metal used in a high temperature zones use METCO Aluminum wire or equivalent, 99.0% purity, 1/8-inch diameter.

3.16.5.1.1 In the MWAS process, two electrically isolated wires of the selected coating material are given opposite DC polarity using an arc-welder power supply. The wires are simultaneously fed to an application gun where they are brought into close proximity to initiate an electric arc. The arc between the two impinging wires results in a local region of high temperature plasma and molten metal. A jet of compressed air, directed through the arc region from behind, disperses and projects the molten metal to the surface being coated. The metal droplets impinge on the substrate; solidify and bond to form a continuous barrier/sacrificial metal coating for cathodic protection of the metal structure. The application gun remains 8-12 inches from the metal surface and negligible heat is imparted to the substrate even during extended coating activities.

NOTE

The air supply must be sufficiently free of oil and moisture so that no visible oil or moisture appears on the blasted surface.

3.16.5.1.2 All surfaces to be thermal sprayed shall be abrasive blasted to a minimum of a near-white metal blasted surface and roughened to a minimum of a 2 mil surface profile. If paint, oil or bituminous materials are present they must be

removed prior to the final blast operation. If the surface is chemically contaminated, it may be necessary to wash it or neutralize it before final blasting.

WARNING

The MWAS process produces high localized noise levels and ultraviolet radiation emissions from the arc region. Prior to commencing initial MWAS operations consult with the base bioenvironmental engineer (BEE) for approval. Proper hearing, eye protection, and respiratory PPE will be designated by the local BEE.

3.16.5.1.3 The abrasive media used for cleaning heavily contaminated surfaces should not be reused for the final blast, even though it is rescreened as the media may contain contaminates that will be re-embedded in the metal surface causing corrosion and/or coating adhesion failure.

3.16.5.1.4 Follow the thermal spray equipment manufacturers' preparation and application instructions. The metal coating shall be applied to a minimum thickness of 6 mils and maximum of 8 mils.

3.16.5.1.5 Any surface, which shows visible moisture, rust, scale or other contamination shall be re-blasted before spraying. The surface must be completely coated to the specified thickness within six hours of abrasive blasting.

CAUTION

The correct thickness of thermal spray coating in this application is critical. A coating that is too thin will not provide corrosion protection while a coating that is too thick will chip and flake off.

3.16.5.1.6 The metalized coating shall be inspected for thickness by using the multi-metal dry film thickness gage to ensure correct surface thickness is achieved. Any thin or uncoated areas must be immediately roughened with a mechanical grinder with a minimum of a 25 grit disc to apply a “cross-hatch” pattern to the substrate. Immediately apply the thermal spray coating to reach the proper coating thickness.

3.16.5.1.7 On high temperature components metalized with aluminum, organization may use METCOSEAL SA silicone aluminum sealer to prevent any rust staining that may occur. This sealer is available from:

METCO INC.
1101 Prospect Avenue
Westbury, L.I., N.Y. 11590

3.17 FIELD LEVEL MAINTENANCE PAINTING REQUIREMENTS.

Field level maintenance-painting requirements for SE with polyurethane are divided into two types, touch-up painting and general maintenance painting.

3.17.1 Touch-Up Painting. Touch-up painting is defined as minor touch-up and/or sectionalized painting of equipment using authorized coating to prevent corrosion. When spot painting, the amount of paint used should be enough to cover the affected area plus a one-inch overlap to seal the area's edges. Treat scratched areas that are one half inch wide by three inches long or less, or chips one inch in diameter or less will be touched-up with CPC (temporary repair), or approved primers and topcoats preloaded in items such as but not limited to: SEMPENS, Preval compressed air spray packs, Clip-Pacs, Brush and Roller, or Akzo Nobel Two-Component MIL-PRF-85285 Aerosol Can. Single component aerosols, enamels or laquers are not authorized coatings. Information about these materials can be viewed on the AFCPCO website located on the AF Portal. Larger scratches/chips in paint or damaged areas will be grounds to repaint the complete section per Paragraph 3.3.

3.18 MAINTENANCE PAINTING.

3.18.1 Maintenance Painting Restrictions. Although it is not recommended, it is a common field level practice during maintenance painting to repeatedly overcoat the entire exterior surface. Under no circumstance should the total number of layers of paint ever exceed six (6). The number of layers can be determined during the featheredge sanding of damaged areas. Count each layer of primer as one and each layer of topcoat as one, the total of which should never exceed six.

3.18.1.1 Equipment exceeding this maximum number of paint layers should be scheduled for complete coating removal and repainting.

CAUTION

Excessive numbers of paint layers will result in hidden corrosion going unnoticed or interlaminar failure of the coatings at one of the coating boundaries.

3.18.1.2 Powder coated equipment shall be touched up using MIL-PRF-85285, Type I or II. SEMPEN or the prepackaged spray touch-up kits shall be used on small areas less than one square foot. All damaged areas shall be feather-edge sanded along the edge damaged area to allow the repair coating to blend in the surrounding areas. The remaining areas to be touched-up shall be scuff sanded with 180 or 240 grit abrasive paper. All bare aluminum areas resulting from coating failure shall be pretreated with the chromate conversion coating SEMPEN prior to priming. The bare areas shall be primed and topcoated with one of the authorized organic coating systems listed in Table 3-1, coating systems 1 or 2.

3.18.2 Prepackaged Coating Touch-Up Kits. For minor primer and paint touch-up such as scratches and other small repair, the use of prepackaged touch-up kits manufactured with the compatible the authorized conversion coatings, primers and topcoats are encouraged.

3.18.2.1 Use of the prepackaged touch-up kits minimizes material waste and personnel exposure to paints and solvents while allowing for the use of the proper coating system for the repair.

3.18.2.2 SEMPENs, Preval compressed air spray packs, Clip-Pacs, or Akzo Nobel Two-Component MIL-PRF-85285 Aerosol Can are currently obtainable in MIL-PRF-85285, Type I, high solids polyurethane. Single component aerosols, enamels or lacquers are not authorized coatings. Information about these materials can be viewed on the AFCPCO website located on the AF Portal.

3.18.3 Radiators Coatings. Radiator coatings are preapplied at the OEM. Field repair is limited to touch-up of the body and attach points of the radiator but not the radiator vanes/core. For touch-up, use the appropriate color of polyurethane from Appendix A. A thin layer of water displacing, hard film CPC, MIL-DTL-85054, may be fogged into the radiator vanes for added protection or for temporary repair. Do not use soft film CPC materials as the coating may collect dirt and debris on the cooling vanes reducing the efficiency of the radiator. An aerosol extension kit such as the FORMIT® 90 degree applicator, or equivalent, may be used to fog the CPC into recessed areas of the radiator. Heavy buildup of the paint and/or CPC is to be avoided. To prevent CPC buildup, remove and reapply the CPC, MIL-DTL-85054 during normal wash cycles. Use of soft film CPC is not recommended as they tend to collect contaminates and would reduce the cooling efficiency of the radiator.

3.19 LIQUID OXYGEN AND LIQUID NITROGEN SERVICING CARTS AND STORAGE TANKS.

Liquid nitrogen and liquid oxygen servicing carts and storage tanks will be drained and purged in accordance with the applicable equipment technical order prior to cleaning and painting.

CAUTION

All valves and instrumentation shall be masked after draining and purging to prevent contamination and explosion hazard during cleaning and painting.

3.19.1 Authorized Materials for Liquid Oxygen and Nitrogen Tanks. The colors for liquid oxygen, liquid nitrogen servicing carts and storage tanks will be according to Paragraph 3.5.3. Liquid oxygen and nitrogen servicing carts and storage tanks will be primed with one coat of epoxy primer, MIL-PRF-23377, Type I, Class 2, or MIL-DTL-53022, Type II (Lead and Chromate Free Epoxy Primer), 0.6 to 0.8 mil dry film thickness, then finished with one coat of MIL-PRF-85285 applied to a dry film thickness of 1.6 to 2.4 mils. Exceptions to this finish system shall be approved by Warner Robins ALC/LESG.

3.20 WALKWAYS AND STEPPING SURFACE COATINGS.

The stepping, standing and/or walking surfaces of stands, metal ladders, platforms, tops of deicing-decontamination unit tanks, etc., shall be coated with walkway coating, A-A-59166. Expanded metal, grating and other anti-skid plates are exempted as long as they are safe from slippage. Adhesive backed, non-slip material MIL-PRF-17951 may be used as an alternate. Follow the non-slip material manufacturers' application instructions.

3.21 COLORS FOR WASTE CONTAINERS.

Containers (Bowsers) used for holding explosive or highly flammable materials will be painted and marked in accordance with TO 42B-1-23.

3.22 SE UNDERCOATING.

A-A-59295 undercoating is authorized for use by field units. The undercoating is intended for use in one thick coat (1/8 inch) on the underside of fenders, floors, etc., to deaden noise, to act as a seal against fumes and to protect the metal from corrosion.

3.22.1 SE Undercoating Considerations. The undercoat may be applied to a primed surface. Topcoating in this area prior to undercoating is not required. Ensure the undercarriage of the equipment is clean prior to application of the undercoating. Do not apply over corrosion.

NOTE

For maximum corrosion protection, undercoating should be applied by the original equipment manufacturer during production.

3.22.1.1 The undercoat is not fluid resistant and fuels/fluids/solvents will readily cause deterioration of the coating. Undercoat should not be used in an area subjected to fluid spills.

3.22.1.2 The undercoat should never be applied over a component (such as a transmission) where the coating would result in the undesired retention of heat.

3.22.1.3 Undercoating is not resistant to temperatures in excess of 325 °F and should not be used in such areas.

3.23 STORAGE COMPARTMENTS.

Storage compartments for ducts or hoses, which use a pad, or matting for abrasion resistance are highly susceptible to corrosion because of the water absorbing characteristics of those materials. Field activities should remove the pads/matting and replace the mat with an abrasion resistant floor covering by using one of the following techniques after removal of all corrosion and the surface is completely prepared for the selected coating.

a. Apply MIL-PRF-81733 sealant 1/8 inch thick over a clean primed and painted surface.

b. Apply Scotch Brand Abrasion-Resistant Polyurethane Film (8561) over a clean primed and painted surface. The film is available in four inch wide rolls and can be easily trimmed to fit any contour or shape. The surface must be clean to permit the adhesive backing to bond properly.

c. Apply 85/15% zinc/aluminum metallization 4-6 mils thick on bare, abrasive blasted steel surfaces.

d. Apply a sprayable polyurethane truck bed liner type coatings, Morton Paint Company, PN 1440-2, or equivalent on high wear areas and storage compartment interiors. Colors shall be black or consistent with the existing color utilized on the equipment. The coating shall be applied over the existing primer and polyurethane topcoat paint system.

3.24 SPLIT WHEEL ASSEMBLIES.

3.24.1 Split Wheel Coating Requirements. To prevent corrosion on the mounting flanges of the split wheels accomplish the following:

3.24.1.1 Remove all corrosion and clean the flanges.

3.24.1.2 For carbon steel wheels mechanically clean the split wheel assemblies and apply 0.002-inch thickness of zinc-rich primer, MIL-PRF-26915, to each of the surfaces. Allow paint to completely dry per the manufacturers application data.

3.24.1.3 MIL-DTL-53022, Type II, is an acceptable alternate for zinc-rich paint on split wheel assemblies only if the necessary surface preparation equipment is not available.

3.24.1.4 If primer is used, apply a thin film of uncatalyzed, low adhesion sealant PR-1773 to the mating surfaces of the split wheels after the primer has cured to prevent fluid intrusion and assist in future wheel disassembly.

3.24.1.5 Reassemble per applicable technical order and apply a bead of sealant RTV MIL-A-46146 around the inflation valve stem to prevent water entry. Tires will be treated with a commercial tire dressing, and all valve stem caps will be plastic.

3.25 MUFFLERS.

To reduce corrosion problems on muffler components a thermal sprayed aluminum coating may be used. The effectiveness of the coating is dependent upon the particular component and the environment (temperature, time at temperature, and time to reach temperature). The effectiveness will also be dependent upon the condition of the component prior to thermal spraying, the coating will be more effective on a new component than on a reconditioned component that had already rusted.

3.26 MISCELLANEOUS CLEANING, SEALING, AND CPC REQUIREMENTS.

NOTE

Do not apply thermal spray pure zinc, 85/15% zinc/aluminum or pure aluminum to stainless steel muffler components.

Figure 3-4. Corrosion Under Data Plate

3.26.1 Sealing of Addressograph or Dash-A Plates. Whenever an Addressograph or Dash-A-Plate is used in lieu of die cut vinyl markings or stencils as data plates, they should be installed wet with corrosion inhibiting sealant, MIL-PRF-81733. The requirement for wet installation also includes the fasteners used for installation. Using the sealant will prevent corrosion from occurring between the data plate and SE.

3.26.2 Electrical Hardware and Terminals.

NOTE

Clean corrosion on terminal studs with a wire brush or terminal stud-cleaning tool.

3.26.2.1 For cables and terminal posts, brush on a light coat of petrolatum, VV-P-236 Grease.

3.26.2.2 For battery frame and holder, apply one coat of primer, MIL-PRF-23377, Type I, Class 2 or MIL-DTL-53022, Type II (Lead and Chromate Free Epoxy Primer) and one coat of MIL-PRF-85285 applied to a dry film thickness of 1.6 to 2.4 mils.

3.26.3 Light Assemblies. Instructions for cleaning the light assemblies are as follows:

3.26.3.1 Remove corrosion with abrasive mat, A-A-58054 and MIL-PRF-680 Type II or III (CID A-A-59601) solvent, wipe off residue and allow to air dry.

CAUTION

Solvent will cause softening and deterioration of rubber gaskets, seals, and insulation.

3.26.3.2 Clean electrical contacts with MIL-PRF-29608, Type I, Electrical Contact Cleaner.

3.26.3.3 Apply a thin layer of CPC, MIL-L-87177, Grade B, to the contacts.

3.26.4 Internal Electrical Components: Circuit Breakers, Relays, etc. Instructions for removing and cleaning internal electrical components are as follows:

CAUTION

Do not remove thin plating on electrical components. Always use the mildest method of corrosion removal.

3.26.4.1 Remove heavy corrosion by rubbing contact surfaces with an abrasive typewriter eraser. Remove light to medium corrosion by rubbing contact surface with ruby red eraser.

3.26.4.2 Clean contacts with MIL-PRF-29608, Electrical Contact Cleaner, Type 1, Class C. Clean relay or circuit breaker assembly with acid brush, A-A-289. Remove foreign matter with a soft brush.

CAUTION

- Do not apply CPC MIL-C-81309 to printed circuit boards. Contact points must be clean for CPC to function properly.
- Care must be taken to avoid removing thin plating.

3.26.4.3 Apply a thin coat of CPC MIL-L-87177, Grade B, to relays and contacts.

3.26.5 Electrical Connectors. Remove light corrosion with toothbrush, A-A-59 or A-A-123, soaked in solvent, TT-I-735, isopropyl alcohol.

CAUTION

Replace all connectors that show moderate to severe corrosion damage.

3.26.5.1 Apply CPC MIL-L-87177, Grade B, to internal surfaces. Preserve outer shell with MIL-PRF-16173, Grade 4. Wipe off excess with a clean cloth.

3.26.5.2 For equipment operating, deploying to, or based in, severe corrosion prone locations, the use of Av-DEC "HiTAK" polyurethane stretch seal is authorized for use around mated electrical connectors, coaxial connectors, and electrical quick disconnect fittings.

3.26.6 Switches. Cleaning instructions for the switches are as follows:

3.26.6.1 Scrub switch with isopropyl alcohol, TT-I-735 and toothbrush, A-A-59 or A-A-123. Wipe with clean cloth, CCC-C-46. Allow to air dry.

3.26.6.2 Apply a thin coat of CPC MIL-L-87177, Grade B to the electrical contact points.

3.26.6.3 Wipe all sliding contacts, cams, and contact points with a clean cloth, CCC-C-46, Class 4 or pipe cleaner to remove CPC.

3.26.7 Wire Harness and Cables. Instructions for cleaning the wire harness and cables are as follows:

NOTE

- Contact points must be clean of CPC to function properly.
- Cleaning solvents and compounds may adversely react with plastics such as harness tubing, gaskets, seals, etc. Test a small area for softening or reaction prior to general use.

3.26.7.1 Scrub corroded area with MIL-PRF-29608. Flush area with cleaning compound. Shake excess solvent from wire harness. Remove residue with a clean cloth, CCC-C-46 and allow to air dry.

3.26.8 Heli-Coil Insert Replacement. Steps for removal of the insert are as follows.

3.26.8.1 Remove the defective insert.

3.26.8.2 Clean and dry the female thread from which the defective insert was removed.

3.26.8.3 Apply MIL-PRF-23377, Type I, Class 2 primer sparingly to the cleaned female thread.

3.26.8.4 Before the primer dries, install new insert and remove the insert driving tag.

CHAPTER 4
MARKING OF SUPPORT EQUIPMENT

4.1 GENERAL.

Support equipment will bear the agency marking, model or type number and safety markings and war readiness material markings when applicable.

4.2 SAFETY AND SERVICING MARKINGS.

NOTE

Requests for deviation to stenciling/marking requirements in Chapter 4 will be approved at MAJCOM level. Illustrations will be included in requests to identify exact location, size, and color of markings. Should conflict arise between the specific SE Technical Order and TO 35-1-3, the specific SE Technical Order will take precedence.

4.2.1 National Star Symbol. The National symbol, a five point star, may be applied to support equipment operated by the USAF in overseas theaters at the direction of the theater commander.

4.2.2 Marking Requirements.

NOTE

Tone down marking procedures are mandatory. Deviations require Major Command approval.

U.S. Air Force decals, stencils or placards will be installed as required by technical orders for the individual SE unit, safety regulations and/or environmental health regulations.

4.2.2.1 Safety/Danger/Caution/Information/and Agency Identification Markings for liquid oxygen/nitrogen storage and transfer tanks will be marked in accordance with Chapter 4 of this book.

4.2.2.2 Danger areas of turbines shall be marked as directed by specific SE technical order data.

4.2.2.3 Other Safety/Danger or Caution/Warning decals or stencils shall be installed as required by safety regulations and/or environmental health directives.

4.2.2.4 Lifting capacities of aircraft jacks and similar lifting devices shall have capacity clearly marked.

4.2.2.5 Warning instructions shall be marked on ground heaters (combustion-type) as shown in Chapter 4.

4.2.2.6 At the option of the local commander, liquid oxygen and liquid nitrogen carts/tanks subject to deployment to or already assigned in NATO countries may have the fill and servicing point marked in accordance with Military Standard 33739 (NATO markings). The NATO symbols for fill and servicing points of liquid oxygen and liquid nitrogen carts/tanks are as follows:

4.2.2.7 Liquid oxygen carts/tanks: Two horizontal “fill rectangles” as shown in Figure 4-1.

4.2.2.8 Liquid nitrogen carts/tanks: One “Filled square” with quarter arcs removed from corners as shown in Figure 4-2.

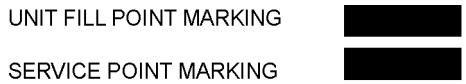

Figure 4-1. NATO Liquid Oxygen Servicing Markings

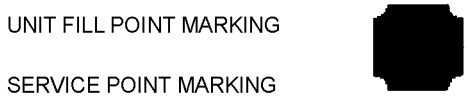

Figure 4-2. NATO Liquid Nitrogen Servicing Markings

4.2.3 Product Identification. Product identification is as follows:

NOTE

Service point marking will be located near the end of the hose that will be attached to the aircraft.

4.2.3.1 AVGAS Octane rating and NATO Product identification shall be 4 inch silver reflective letters on purple background placed on front or back portion of filter body, depending on space available.

4.2.3.2 All other product identifications and NATO markings shall be 4 inch silver reflective letters on a red background.

4.2.3.3 Registration number and U.S. Air Force decals shall be placed on rear portion of the filter body if stenciled.

4.2.3.4 Other optional information markings shall be in accordance with Paragraph 4.7.

4.2.3.5 Fuel servicing NATO compatibility markings/decals shall be installed as outlined in Chapter 2 of TO 36-1-191.

4.2.3.6 Special markings for aircraft hydraulic servicing/testing SE are as follows:

4.2.3.6.1 Color/markings to identify hydraulic oil contents will be filler cap painted blue, with MIL-PRF-5606, MIL-PRF-83282, SKYDROL, etc., whichever is applicable, stenciled in 1 inch black letters on filler cap or most conspicuous area adjacent to filler cap.

4.2.3.6.2 Color/markings to identify fuel content on all SE will be filler cap painted same as the unit, with fuel designation (Diesel, MOGAS, JP-5, JP-8, etc.) whichever is applicable, in 1 inch black letters on filler cap or most conspicuous area adjacent to filler cap.

4.2.3.7 Application of NATO marking will be accomplished by stencil or decal as appropriate. The symbol and letters will be black color 37038.

4.2.3.8 Special marking for fuel dispensing equipment, now classified as vehicular SE in FSC 4930 will include "No Smoking within 50 feet" on front portion of filter body using 3 inch silver reflective letters on a red background or red letters on olive drab or matching unit color (gray/green/brown) surfaces for tone down equipment.

4.2.4 SE Reflectorization. SE will be reflectorized using black reflective strips 2 inches wide and 6 inches in length conforming to L-S-300C, Type II, Class 1, Reflectivity 2, Durability 1.

4.2.4.1 Tape will identify length, width, and height of unit. Units exceeding 6 feet in length will have the center of unit marked. Distances between edges of reflective tape will not exceed 6 feet and will be equally spaced. Units less than 6 feet in length will have only the top and bottom corners identified. The outermost edges of the unit must be readily identifiable.

4.2.4.2 Use of sound judgment for reflectorization and marking of smaller SE is authorized.

4.2.4.3 Aircraft tow bars have additional reflectorization requirements due to their length. Distance between edges of reflective tape will not exceed 6 ft. (72 in.) in length and will be equally placed on both sides of the tow bar.

4.3 AGENCY IDENTIFICATION MARKINGS.

4.3.1 Air Force Owned - Contractor Operated Equipment. Air Force owned SE operated by a contractor under terms of a contract with the Air Force, will be marked in a conspicuous location on both sides of the equipment as follows:

AIR FORCE EQUIPMENT
Operated by
(Name and Address of Contractor)

4.3.2 Mobilized Equipment. All equipment that is required in support of flight line operations, which may be relocated and deployed, based on their assigned mission tasking, will require a mobility placard. These placards can be permanently installed as a local option in accordance with the following assembly instructions and illustrations.

NOTE

- On contractor bailment equipment, the registration number, when applicable, will be stenciled beneath the hood of the equipment. The only other external markings authorized are safety markings and reflectorized markings required for night visibility.

- Placards already installed will remain on the equipment. Place mobility information sheet on the front left corner of the unit. On equipment where this is not feasible or practical, place mobility information sheet in most practical visible location.

4.3.2.1 If computer generated, mobility placards maybe assembled per Table 4-1.

NOTE

When automated/computer generated placards are used then stenciling requirement in Paragraph 4.3.2.2 is optional.

4.3.2.2 Using 1/2-inch black letters, stencil mobility placard with the information in Table 4-2 for open viewing.

Table 4-1. Mobility Placard Construction Information

a.	Assemble placard by connecting two-each 1/8-inch X 10-inch X 6-inch pieces of sheet metal with a piano hinge.
b.	Drill 1/4" diameter mount holes 2-inches down from the top and 2-inches in from each side of the sheet metal placard.
c.	Drill 1/4" diameter hole 2-inches from the left side and 2-inches up from bottom of placard.
d.	Paint for placard will be the same color as the paint applied to unit.
e.	Mount placard to unit by using 1/4" bolts, washers, and nuts. Use a longer bolt for the left side to secure placard in the folded position.

Table 4-2. Mobility Placard Stencil Requirements

a.	INC: (increment) 1/4-inch from top and 1/4-inch from the placard side. Highlight the area using 1/2-inch black reflective tape. Start from INC to the middle of placard.
b.	CUBE: 1/4-inch from side and 1/8-inch from bottom of highlighted chalk area. All other stencils will have 1/8-inch line spacing between them.
c.	W/B: Wheelbase.
d.	LWH: Length x width x height.
f.	CB FFE: Center of balance from front end.
e.	TCN: Transportation control number.
g.	ORGANIZATION STENCIL: Start at middle of placard 1/8" from top.
h.	MODEL NUMBER: Example: A/M32A-86D.
i.	GVW: Gross axle weight in pounds as certified by the transportation management office (TMO) with approximately 1/2 tank of fuel. NOTE: As the actual fuel quantity is approximated the GVW will not be stenciled on the placard. The GVW will remain blank and the GVW will be written-in by the appropriate official after weight checks.
j.	RAW: Rear axle weight in pounds.
k.	FAW: Front axle weight in pounds.
1.	PACKAGE ENVELOPE: Attach to bottom of placard.

NOTE

Use black reflective tape to highlight TCN areas.

4.3.2.3 Stencil the mobility placard as follows. Folded View (Refer to Figure 4-3).

(a) Use 1/2-inch black letters centered on the placard.

(b) USAF

(c) Unit organization

(d) Model number

4.4 INFORMATIONAL MARKINGS (OPTIONAL).

Instructions that would aid in the operation and prevent potential damage to equipment may be applied to units without instruction plates. The instructions will be held to a minimum and will not exceed those specified in the applicable equipment technical order. Marking will be of the smallest readily readable size.

4.5 COLOR, STYLE AND SIZE OF MARKINGS.

4.5.1 Use of Reflective Tape, Decals, and Vinyl Lettering. Use reflective tape and vinyl stencils (vinyl machine NSN 3417-01-247-8063 or equivalent) in lieu of spray painted stencils is highly encouraged.

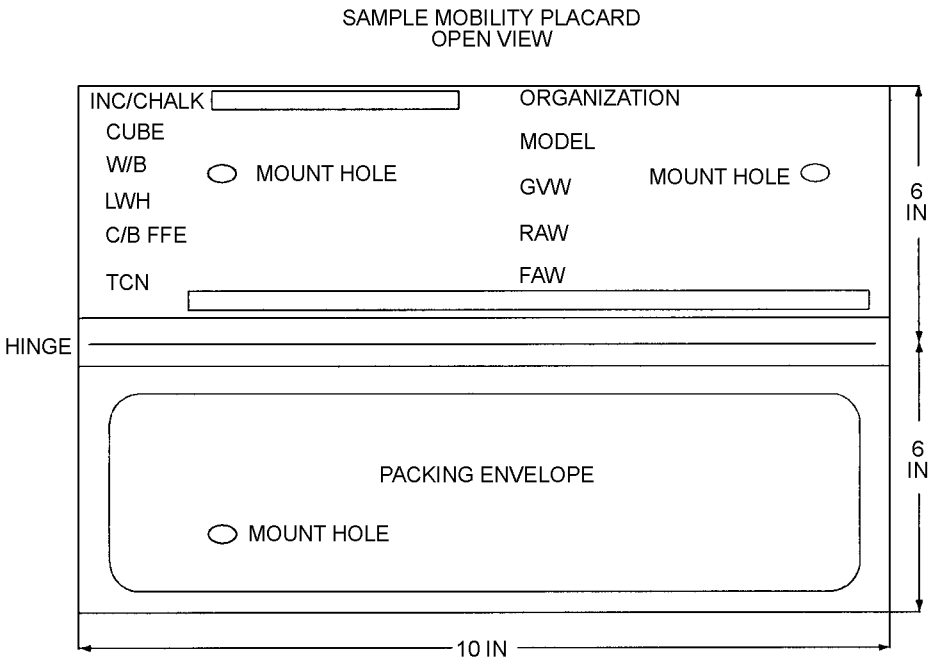

Figure 4-3. Sample Mobility Placard

4.5.1.1 Decals and/or vinyl lettering is specially prepared plastic film containing designs, words, numerals or colored marking stripes, which may be applied or attached to Air Force equipment as a method of marking or identification. The decals maybe locally manufactured using equipment such as Gerber Sign Maker or equivalent or commercially procured.

4.5.1.2 The use of local manufacture or commercial acquired decals and/or vinyl markings is encouraged as a substitute for paint stencil to reduce the use of aerosol paint systems in the Air Force.

4.5.1.3 Commercial or locally manufactured decals or lettering shall be manufactured from exterior grade, dimensionally stable material procured in the appropriate colors and gloss equivalent to Fed Standard 595b color requirements. Matte/flat colored vinyl material shall be used on semi-gloss or flat finished SE. Gloss vinyl material shall be used on gloss-finished equipment. Commercially procured decals shall conform to A-A-59485. The preferred local manufacture vinyl decal/lettering material is Gerber High Performance Series 220 Premium Film, 3M Scotchcal™ Electrocut™ Film Series 7725 or equivalent.

4.5.1.4 Safety/Danger/Warning stencils will be non-reflective red.

4.5.1.5 Caution/Informational stencils will be non-reflective black.

4.5.1.6 Decals/vinyl markings are not authorized on unpainted surfaces as possible concentration cell corrosion may occur.

4.5.1.7 Unless otherwise directed in this manual, follow the material manufacturer's directions on application and removal of the marking material.

4.5.1.8 Use of pneumatic drill and 3M Rubber Wheel, PN 07498, is authorized an an alternate decal removal method.

4.5.2 Field Numbers. MAJCOMS have the option to use white or black letters for field numbers. Field numbers will be 4-inch letters unless smaller size lettering is required due to limited space. Location will be all four sides, upper right corners or where practical.

4.5.3 USAF Legends. When US Air Force legends are used, the background color will be the same as color of the equipment on which it is being applied. Color of letters will be black in one of the below sizes. USAF may be used in lieu of U.S. AIR FORCE.

4.5.4 Color Numbers. The colors listed in this technical order are based on Federal Standard 595b, Colors Used in Government Procurement. Commanders are encourage to maintain marking colors as near the indicated shade as possible, but should not delay marking for lack of particular color shade. Also, when marking camouflaged SE, deviation from glossy colors is authorized.

4.5.5 Markings Size. Block-type letters and numerals of 1/2, 1, 1-1/2, 2, 3, or 4 inch size will be used for marking Unless otherwise specified, the size selected shall be the largest practicable size in the available space consistent with good appearance and visibility.

4.5.6 Tire Pressure/Tow Speed. If conflict should arise between end item technical order/inspection work cards and TO 35-1-3 regarding tire pressure and max tow speed, then the applicable end item TO/WC takes precedence. For stenciling purposes, "T.P." is authorized in place of "Tire Pressure". If maximum tow speed is not called out in end item TO/WC then contact the local Safety Office for guidance.

4.6 MAINTENANCE OF MARKINGS.

4.6.1 Markings Removal. Markings should be maintained on all units of equipment at all times, except as follows:

a. Upon transfer from the USAF, all markings except registration numbers will be removed.

b. Upon permanent transfer to disposal agencies or upon sale to commercial contractors, AF marking will be obliterated or removed.

c. Upon transfer to MAP, all Air Force markings will be removed.

4.6.2 National Guard Decalcomania. The use of the Air National Guard decalcomania on SE is optional at the discretion of the local base detachment commander.

4.7 CAUTION/WARNING MARKINGS.

4.7.1 Pintle Hook Caution Marking. Near pintle hooks (if space is available), stencil in 1/2 inch letters the following before towing, latch pintle, close trip lock and install lock pin". On SE using pintle pins stencil: "Before towing, install pintle pin and insert safety pin."

4.7.2 Spring Loaded Warning Marking. Organizations with spring-loaded draw, towbars, or other equipment will have "Warning Spring Loaded" stenciled (1 inch RED) on conspicuous area. Decal may be used in lieu of stenciling.

4.7.3 Aircraft Towbar Caution Marking. On top of aircraft towbars, just aft of the lunette eye and/or handle, add a stencil or decal which states: "CAUTION: Do not allow towbar to contact tow vehicle."

4.7.4 Tire Pressure/Tow Speed Markings. Should conflict arise between technical orders/work cards and this TO regarding tire pressure and the tow speed, then the applicable end item technical order/work card take precedence. For stenciling purposes, "TP" is authorized in place of "tire pressure". If tow speed is not called out in end item technical order/work card, then contact the local Safety Office for guidance.

4.7.5 Personnel Static Discharge Marking. Metallic work stands shall be equipped with a static discharge plate made of copper, zinc or zinc-coated material. The plate shall be mounted or attached to the handrail at the entrance to the stand. The plate shall be marked "PERSONNEL STATIC DISCHARGE PLATE".

4.8 FUEL CELL REPAIR SE IDENTIFICATION.

Fuel cell repair SE complying with the requirements of TO 1-1-3 will be painted, marked, and reflectorized with the same colors and in the same manner as the activity's other flight line SE. Commands at their option may add secondary identification markings consisting of bands two inches wide. These bands will be applied with either tape or paint that is compatible with the painted surface and of a contrasting color.

Legend for Figure 4-4.			
Index No.	Markings	Size	Color*
1	FIELD NUMBERS	4-inch	Black
2	MAX TOWING SPEED 10 MPH	1-inch	Black
3	MAX CRANE CAP 1500 LBS	1-inch	Black
4	WARNING 2 PEOPLE REQUIRED TO RAISE OR LOWER CRANE	1-inch	Red
5	TIE DOWN 5000 LBS CAPACITY	1/2-inch	Black
6	WARNING ALWAYS MAINTAIN A MINIMUM OF 4 WRAPS ON DRUM	1/2-inch	Red
7	ATTACH HOOK TO EYELET	1-inch	Black
8	WARNING DO NOT RETURN POSITIONING CABLE TO THE STOWED POSITION BEFORE MATING BOOM TO MAST	1/2-inch	Red
9	WARNING DO NOT REMOVE MAST LOCK PIN UNTIL BOOM IS FOLDED AND SECURED TO MAST	1/2-inch	Red
10	LOCK PIN STORAGE	1/2-inch	Black
* - Standard caution/informational marking color will be non-reflective black. Standard safety/warning marking color will be non-reflective red.			

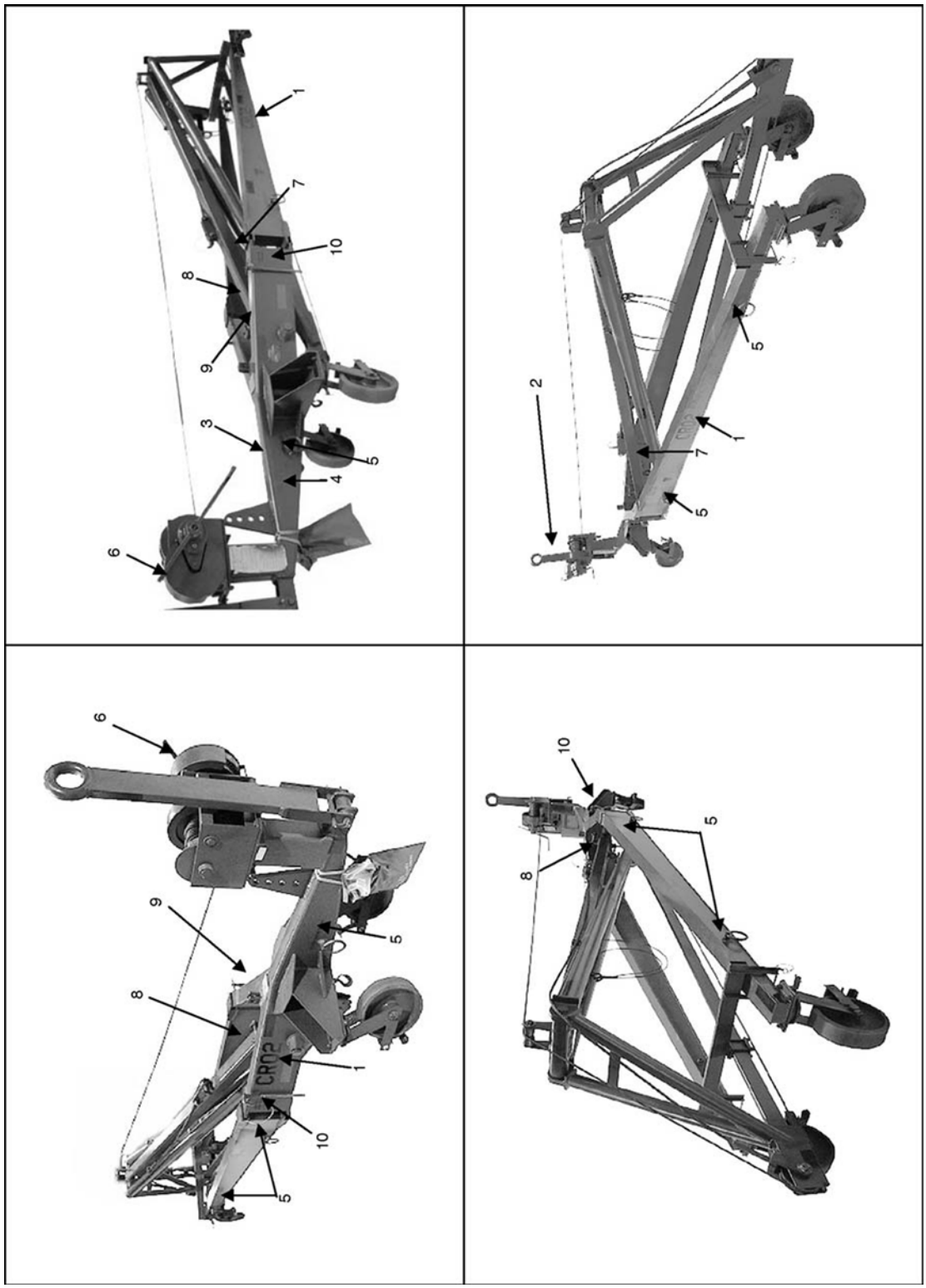

Figure 4-4. 1,500 LB Utility Crane

Legend for Figure 4-5.			
Index No.	Markings	Size	Color*
1	FIELD NUMBERS	4-inch	Black
2	TIRE PRESSURE XX PSI	1/2-inch	Black
3	MAX TOW SPEED 10 MPH	1/2-inch	Black
4	CAUTION CLOSE DOORS BEFORE TOWING	1/2-inch	Black
5	WARNING TURN AIR SHUT-OFF VALVE OFF BEFORE PERFORMING MAINTENANCE	1-inch	Red
6	DIESEL OR JP-8	1-inch	Black
* - Standard caution/informational marking color will be non-reflective black. Standard safety/warning marking color will be non-reflective red.			

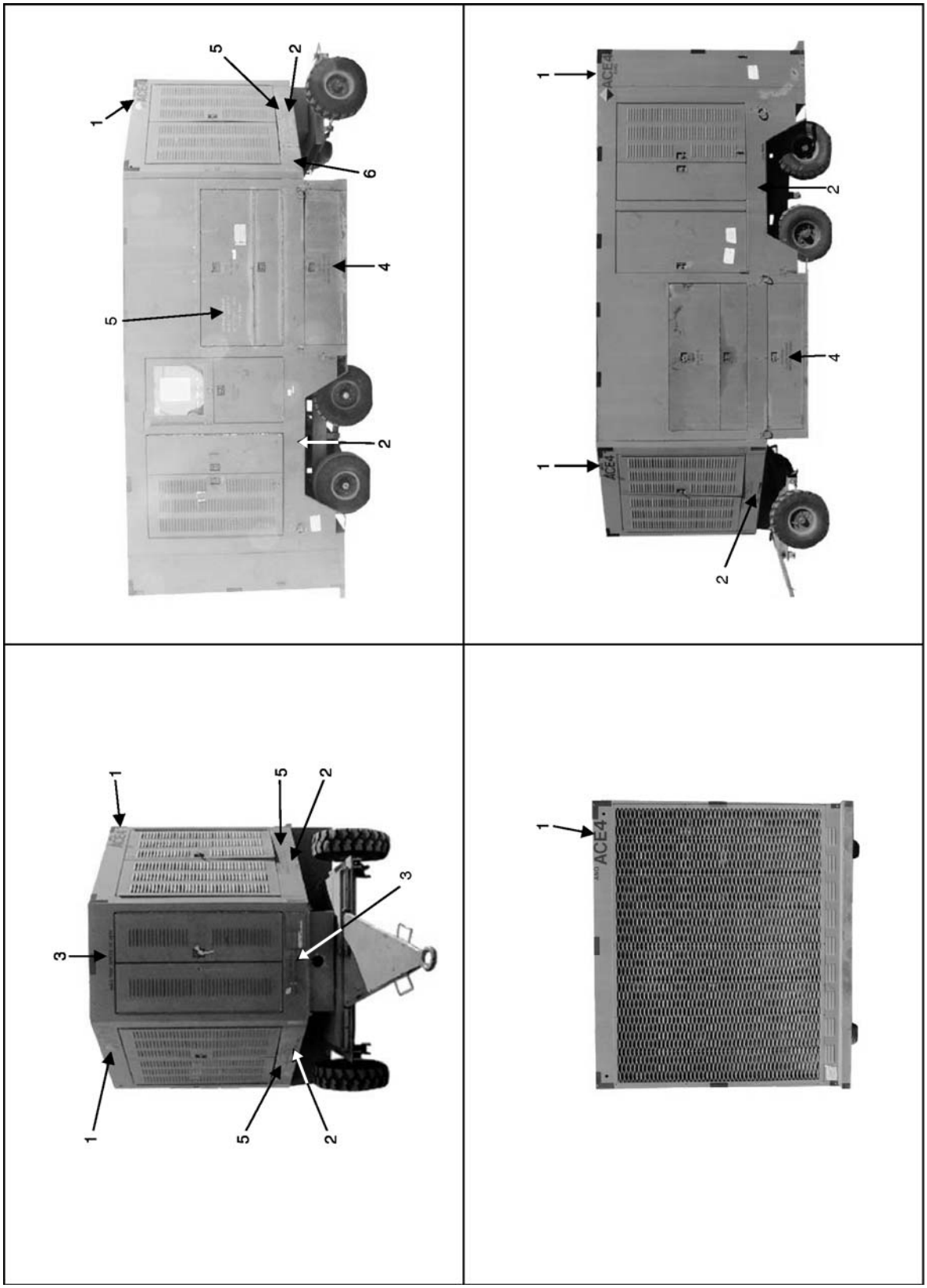

Figure 4-5. ACE Air Conditioner MC1A, Diesel

Legend for Figure 4-6.			
Index No.	Markings	Size	Color*
1	FIELD NUMBERS	4-inch	Black
2	TIRE PRESSURE XX PSI	1/2-inch	Black
3	MAX TOW SPEED 15 MPH	1/2-inch	Black
4	CAUTION DOOR MUST BE OPEN DURING OPERATION (TOP ENGINE DOOR)	1-inch	Black
5	DO NOT FORKLIFT	1/2-inch	Black
6	CAUTION BEFORE TOWING LATCH PINTLE CLOSE TRIPLOCK INSTALL LOCK PIN	1/2-inch or decal PN 3613506	Black
7	JP-8 (CLOSE PROXIMITY TO FUEL CAP)	1-inch	Black
8	MIL-XXXX (MARK WITH APPLICABLE MIL-SPEC FLUID. STENCIL WILL BE IN CLOSE PROXIMITY TO HYD. SERVICING CAP)	1-inch	Black
* - Standard caution/informational marking color will be non-reflective black. Standard safety/warning marking color will be non-reflective red.			

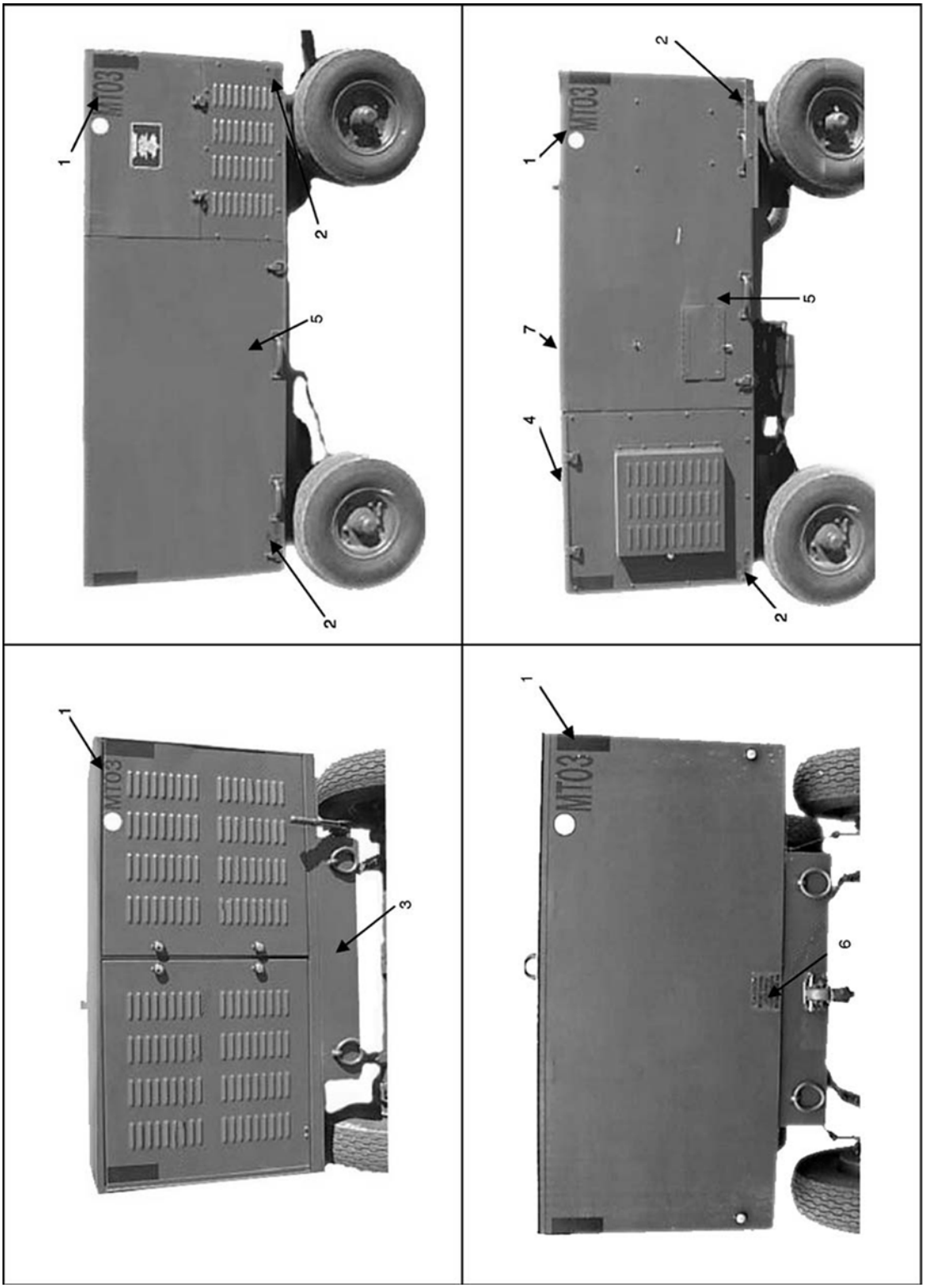

Figure 4-6. AF/M27M-1 Pumping Unit, Hydraulic, Diesel Driven

Legend for Figure 4-7.			
Index No.	Markings	Size	Color*
1	FIELD NUMBERS	4-inch	Black
2	TIRE PRESSURE XX PSI	1/2-inch	Black
3	MAX TOW SPEED 15 MPH	1/2-inch	Black
4	CONTROL PANEL	1/2-inch	Black
5	ON BRAKE OFF	1/2-inch	Black
6	JP-8 FUEL FILLER INSIDE	1-inch	Black
* - Standard caution/informational marking color will be non-reflective black. Standard safety/warning marking color will be non-reflective red.			
NOTE: Figure 4-7 includes views of various models of the AF/M32T-1 Cabin Leakage Tester.			

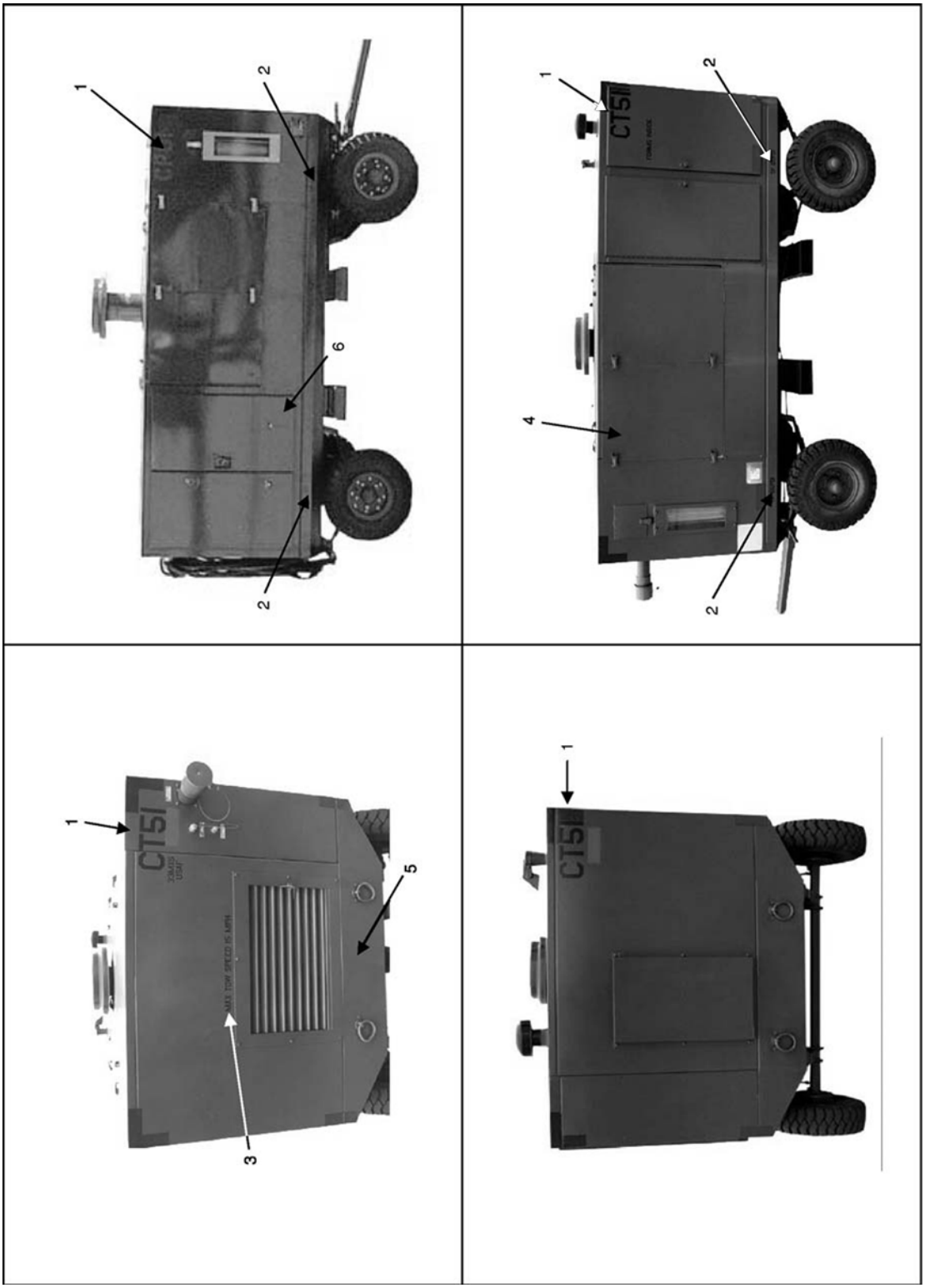

Figure 4-7. AF/M32T-1 Cabin Leakage Tester

Legend for Figure 4-8.			
Index No.	Markings	Size	Color*
1	FIELD NUMBERS	4-inch	Black
2	TIRE PRESSURE XX PSI	1/2-inch	Black
3	MAX TOW SPEED 15 MPH	1/2-inch	Black
4	OXYGEN NO SMOKING	1-inch	Red
* - Standard caution/information marking color will be non-reflective black. Standard safety/warning marking color will be non-reflective red.			

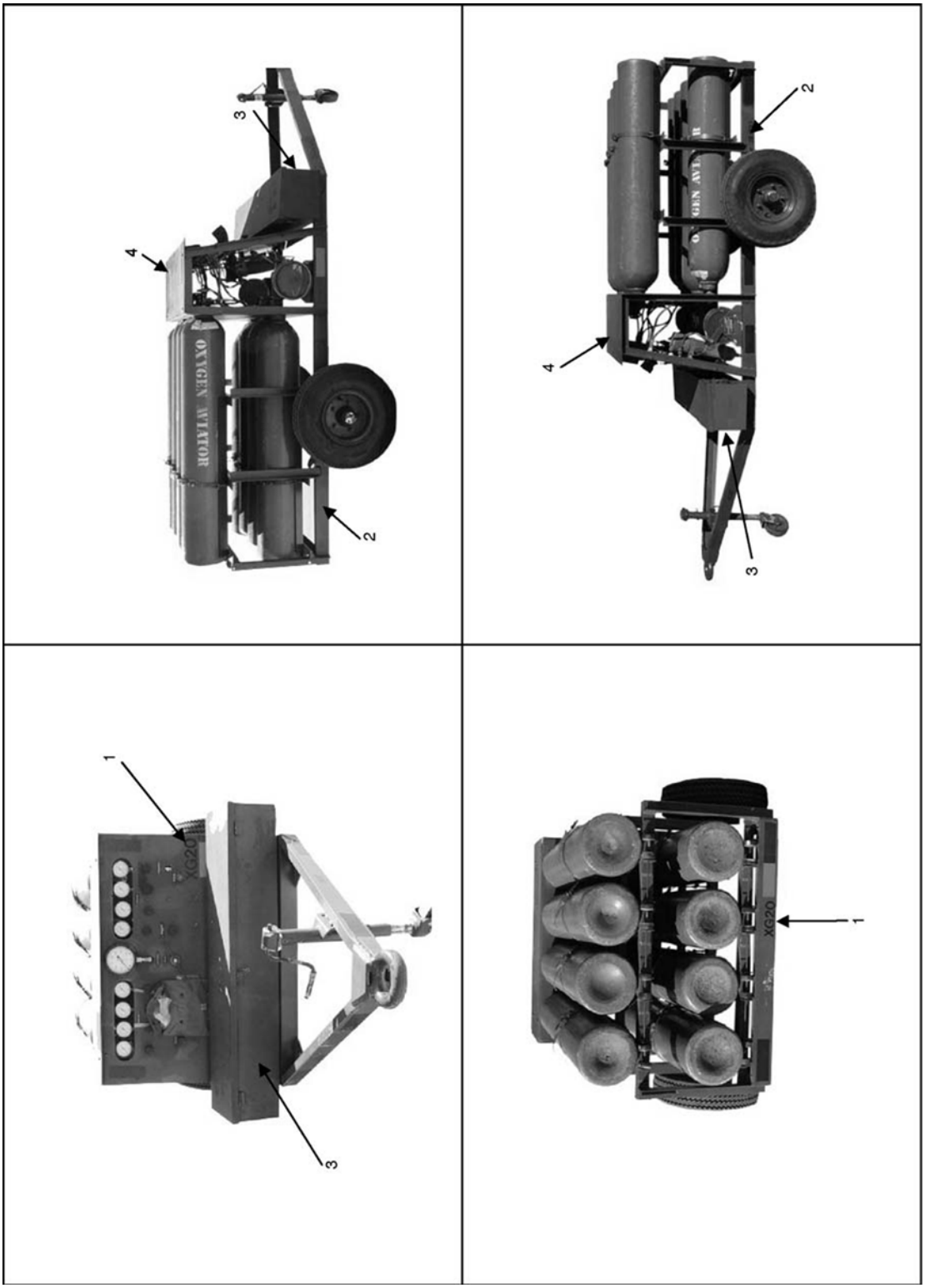

Figure 4-8. Aircraft Oxygen Servicing Cart

Legend for Figure 4-9.			
Index No.	Markings	Size	Color*
1	FIELD NUMBERS	4-inch	Black
2	TIRE PRESSURE XX PSI	1/2-inch	Black
3	MAX TOW SPEED 15 MPH	1/2-inch	Black
4	DANGER ENSURE THAT ONLY ONE GENERATOR SET IS CONNECTED AT ANY TIME	1-inch	Red
5	DANGER HIGH VOLTAGE 440 VOLTS	1/2-inch or decal	Red
6	FIRE EXT INSIDE	1/2-inch	Black
7	WARNING KEEP PANEL DOWN DURING OPERATION	1/2-inch	Red
8	CAUTION DOOR MUST BE OPEN DURING OPERATION	1/2-inch	Black
9	WARNING KEEP PANEL DOWN DURING OPERATION DO NOT MAKE CONNECTIONS DISCONNECTIONS OR CHANGES TO INPUT RECEPTACLES OR TERMINALS WHILE POWER IS APPLIED	1/2-inch or decal	Red
10	CAUTION BEFORE TOWING LATCH PINTLE CLOSE TRIPLOCK INSTALL LOCK PIN	1/2-inch or decal PN 3613506	Black
* - Standard caution/informational marking color will be non-reflective black. Standard safety/warning marking color will be non-reflective red.			

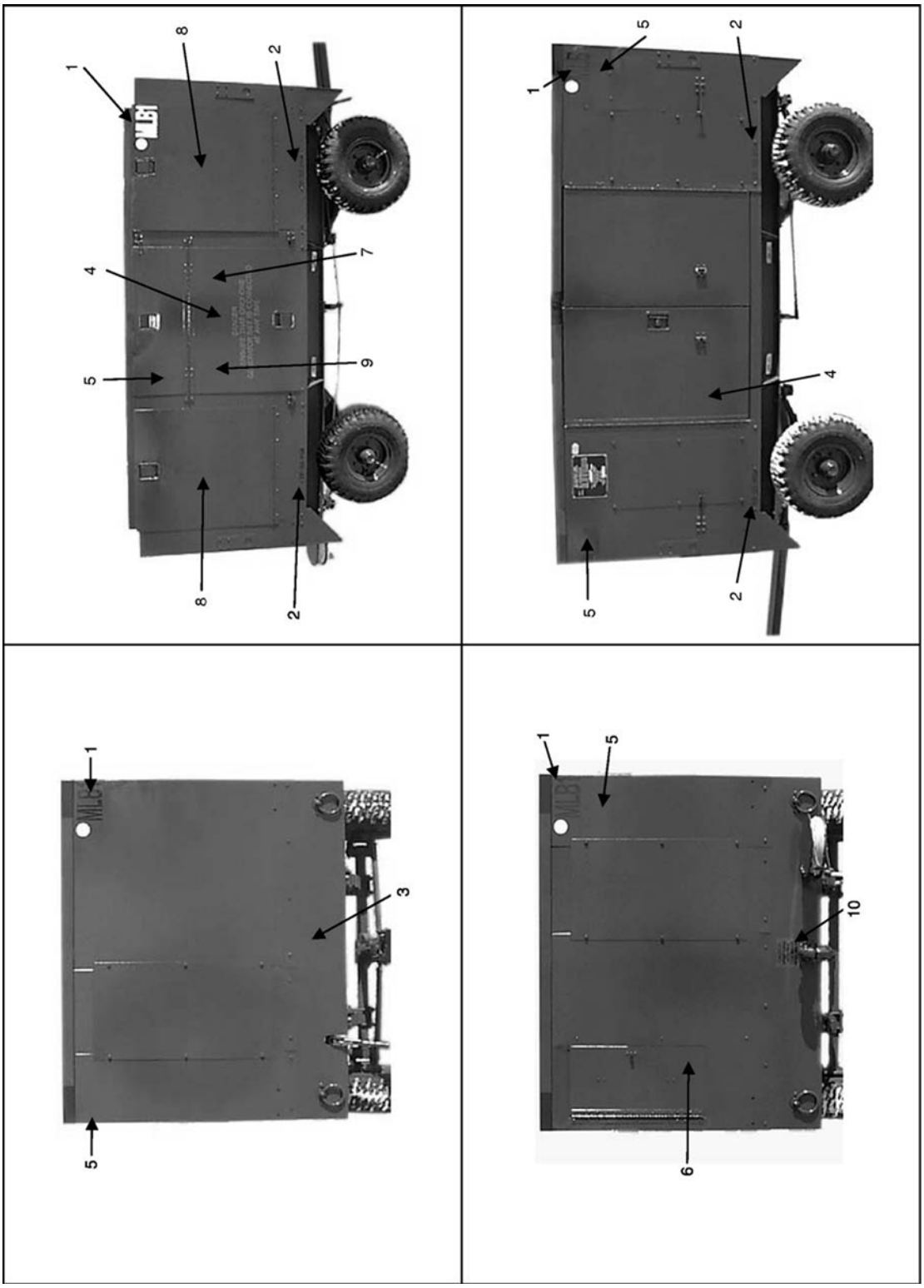

Figure 4-9. A/M24T-8 Load Bank

Legend for Figure 4-10.			
Index No.	Markings	Size	Color*
1	FIELD NUMBERS	4-inch	Black
2	FRONT TIRE PRESSURE XX PSI	1/2-inch	Black
3	REAR TIRE PRESSURE XX PSI	1/2-inch	Black
4	MAX TOW SPEED 15 MPH	1/2-inch	Black
5	WARNING TOWBAR SPRING LOADED	1-inch	Red
6	DANGER HOT EXHAUST	1-inch	Red
7	CAUTION DO NOT EXCEED STEERING STOPS WHEN TOWING OR BACKING	1-inch	Black
8	DANGER PLANE OF ROTATION	1-inch or decal	Red
9	STRIPE	1-inch	Red
10	EMERGENCY FUEL SHUT OFF VALVE INSIDE	1-inch	Red
11	JP-8 FUEL FILLER INSIDE	1-inch	Black
12	WARNING USE VENTED FUEL CAPS ONLY	1-inch	Red
13	DO NOT OPERATE UNIT UNLESS TOP COVER IS OPEN AND LATCHED	1-inch	Black
14	CAUTION FUEL TANK	1/2-inch	Black
* - Standard caution/informational marking color will be non-reflective black. Standard safety/warning marking color will be non-reflective red.			

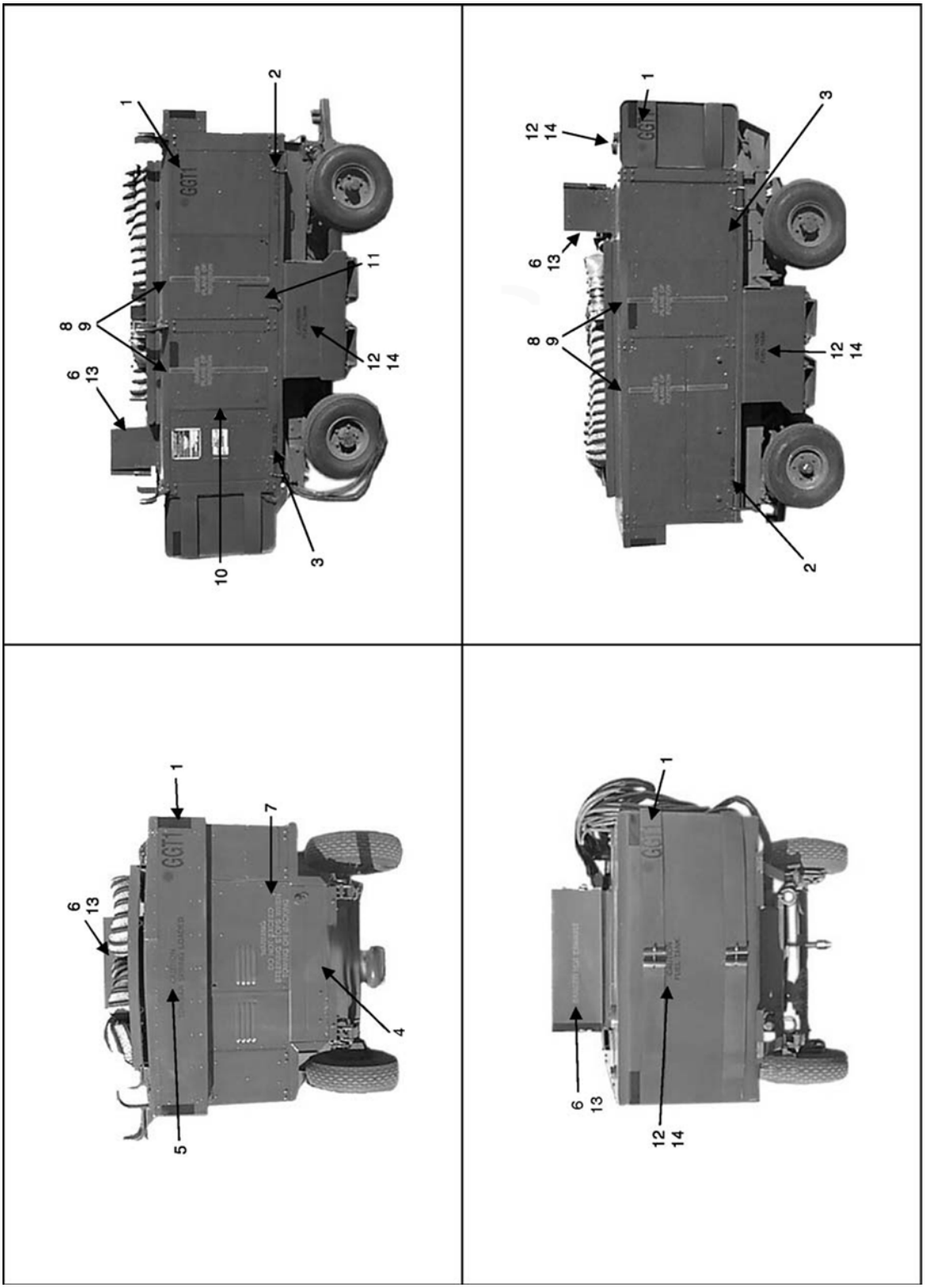

Figure 4-10. A/M32A-60A Gas Turbine Generator

Legend for Figure 4-11.			
Index No.	Markings	Size	Color*
1	FIELD NUMBERS	4-inch	Black
2	TIRE PRESSURE (REFER TO WORKCARD TO 35C2-3-1-426WC-4-20-1)	1/2-inch	Black
3	MAX TOW SPEED 15 MPH	1/2-inch	Black
4	EMERGENCY SHUTDOWN LEVER INSIDE	1-inch	Red
5	DO NOT FORKLIFT	1/2-inch	Black
6**	JP-8	1-inch	Black
*- Standard caution/informational marking color will be non-reflective black. Standard safety/warning marking color will be non-reflective red.			
** - Stencil in close proximity to the fuel tank filler neck.			

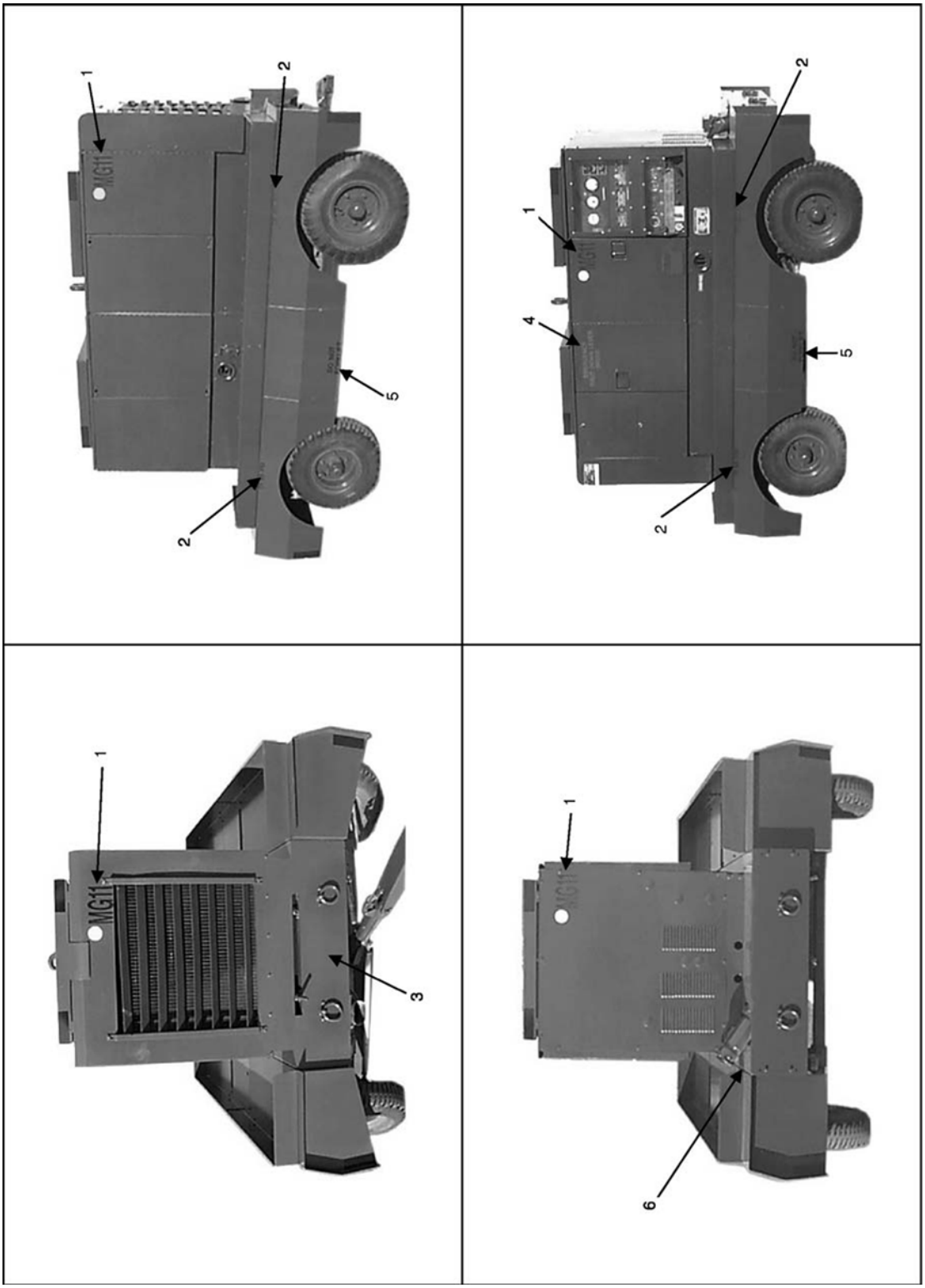

Figure 4-11. A/M32A-86 Generator, Diesel

Legend for Figure 4-12.			
Index No.	Markings	Size	Color*
1	FIELD NUMBERS	4-inch	Black
2	FRONT TIRE PRESSURE XX PSI	1/2-inch	Black
3	REAR TIRE PRESSURE XX PSI	1/2-inch	Black
4	MAX TOW SPEED 15 MPH	1/2-inch	Black
5	DANGER HOT EXHAUST	1-inch	Red
6	DANGER PLANE OF ROTATION	1-inch or decal	Red
7	STRIPE	1-inch	Red
8	EMERGENCY FUEL SHUT-OFF INSIDE	1-inch	Red
9	JP-8 FUEL FILLER INSIDE	1-inch	Black
10	CAUTION BEFORE TOWING LATCH PINTLE CLOSE TRIPLOCK INSTALL LOCK PIN	1/2-inch or decal PN 3613506	Black
* - Standard caution/informational marking color will be non-reflective black. Standard safety/warning marking color will be non-reflective red.			

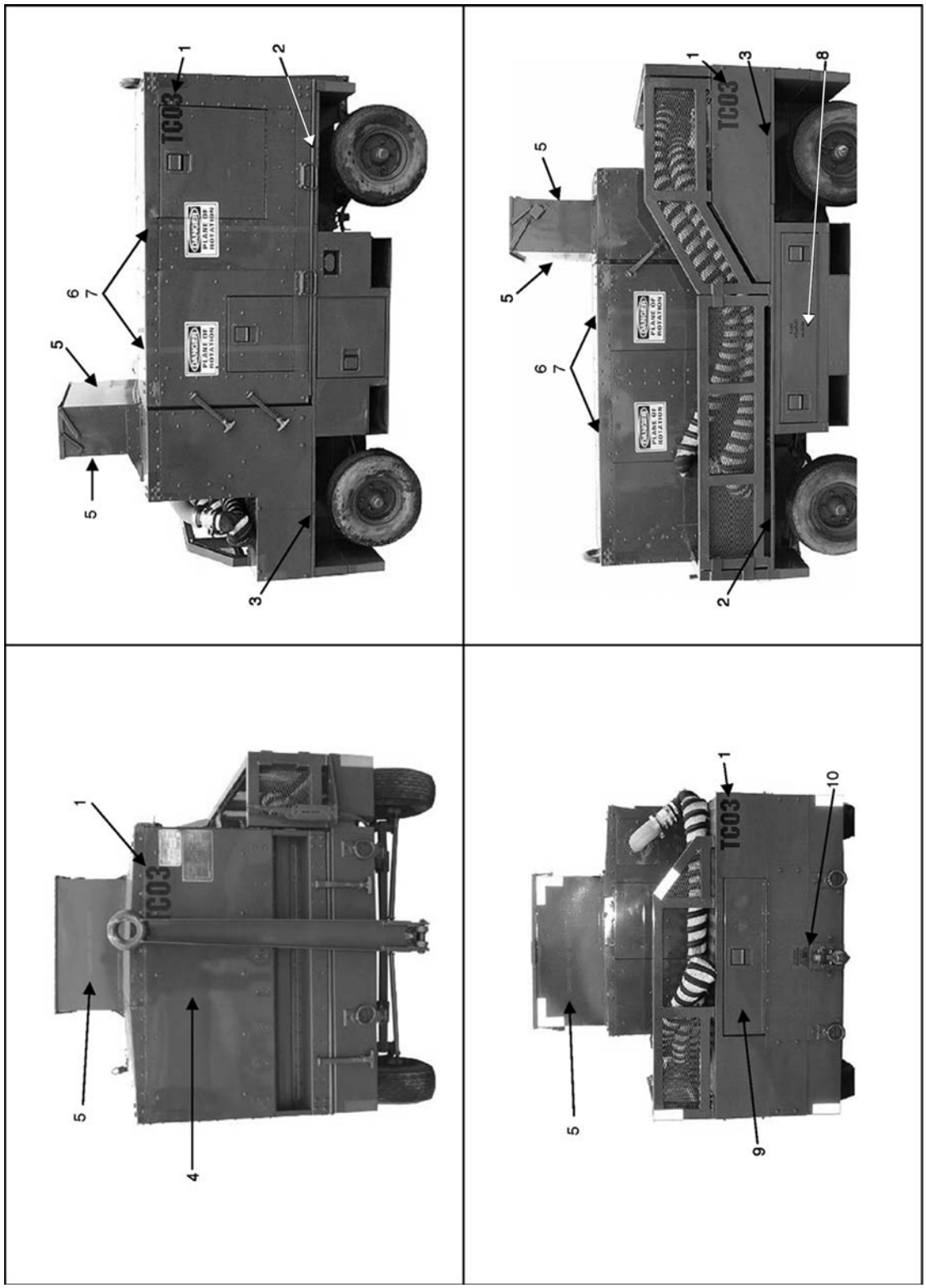

Figure 4-12. A/M32A-95 Compressor, Gas Turbine, Trailer Mounted

Legend for Figure 4-13.			
Index No.	Markings	Size	Color*
1	FIELD NUMBERS	4 -inch	Black
2	TIRE PRESSURE XX PSI	1/2-inch	Black
3	FRONT TIRE PRESSURE XX PSI	1/2-inch	Black
4	MAX TOW SPEED 15 MPH	1/2-inch	Black
5	DANGER HOT EXHAUST	1-inch	Red
6	CAUTION DOOR MUST BE OPEN BEFORE USE	1-inch	Black
7	CAUTION BEFORE TOWING LATCH PINTLE CLOSE TRIPLOCK INSTALL LOCK PIN	1/2-inch or decal PN 3613506	Black
* - Standard caution/informational marking color will be non-reflective black. Standard safety/warning marking color will be non-reflective red.			

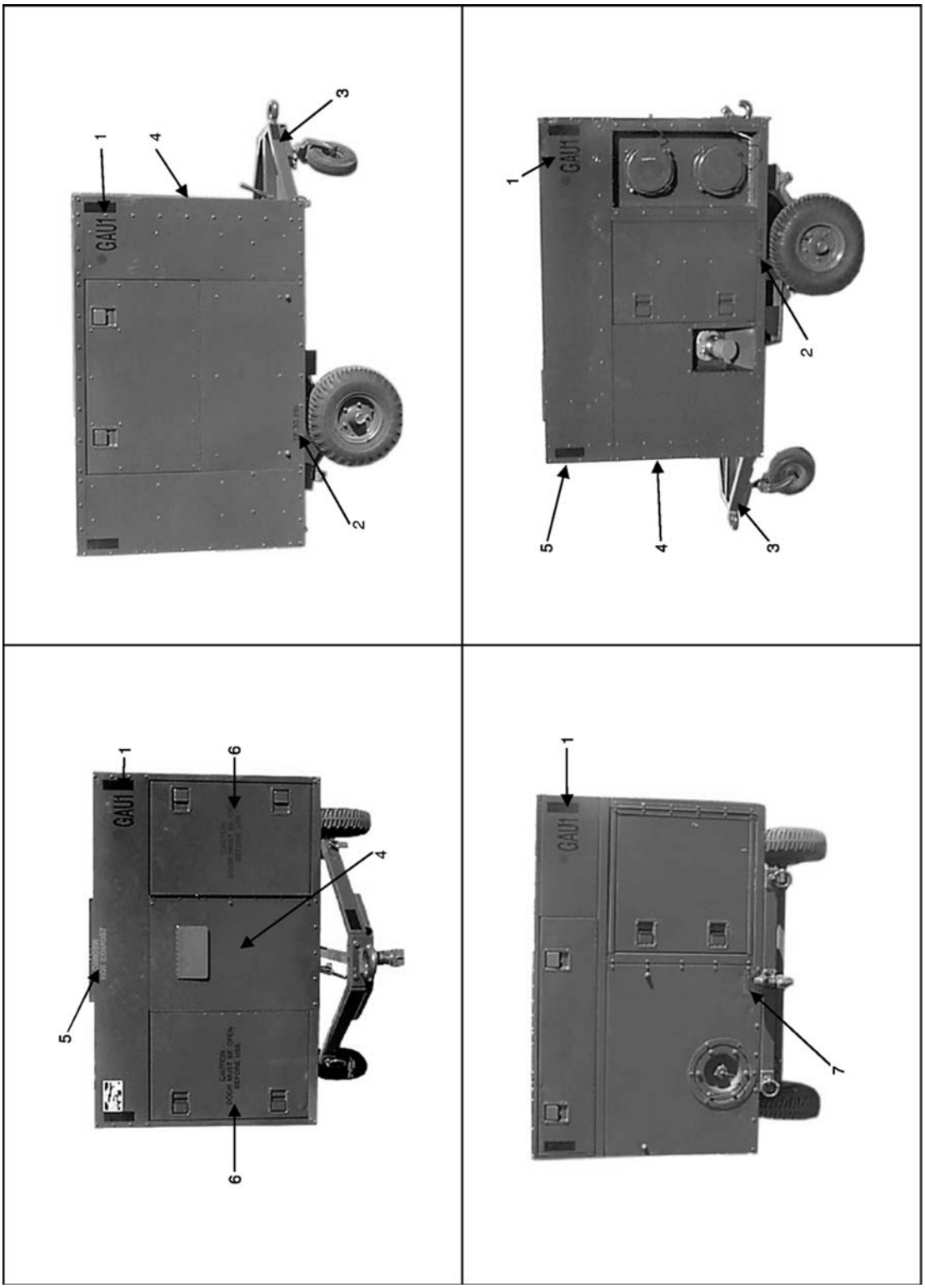

Figure 4-13. A/M32C-10C/10D Air Conditioner Set

Legend for Figure 4-14.			
Index No.	Markings	Size	Color*
1	FIELD NUMBERS	4-inch	Black
2	TIRE PRESSURE XX PSI	1/2-inch	Black
3	MAX TOW SPEED 15 MPH	1/2-inch	Black
4	CAUTION DOOR MUST BE OPEN BEFORE OPERATING AIR CONDITIONER	1/2-inch	Black
5	CAUTION USE CABLE GUIDES AND HOIST RINGS WHEN HOISTING	1/2-inch	Black
6	CAUTION BEFORE TOWING LATCH PINTLE CLOSE TRIPLOCK INSTALL LOCK PIN	1/2-inch or decal PN 3613506	Black
* - Standard caution/informational marking color will be non-reflective black. Standard safety/warning marking color will be non-reflective red.			

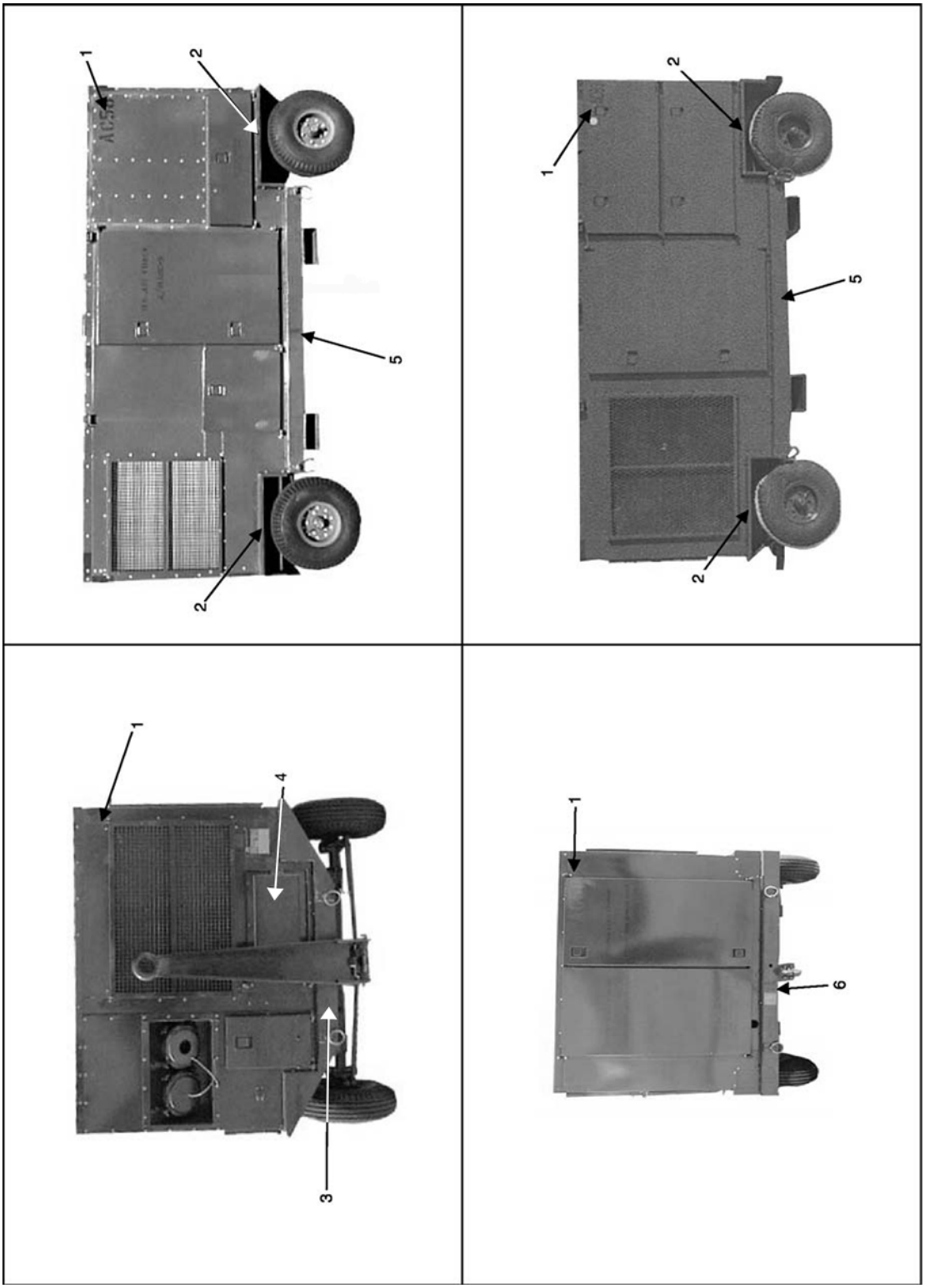

Figure 4-14. A/M32C-5 Air Conditioner Set

Legend for Figure 4-15.			
Index No.	Markings	Size	Color*
1	FIELD NUMBERS	4-inch	Black
2	TIRE PRESSURE XX PSI	1/2-inch	Black
3	MAX TOW SPEED 15 MPH	1/2-inch	Black
4	CAUTION DO NOT EXCEED TURNING RADIUS	1/2-inch	Black
5	FUEL VALVE	1/2-inch	Black
6	DANGER HOT EXHAUST	1-inch	Red
7	CAUTION TOWBAR SPRING LOADED	1-inch	Black
8	CAUTION DO NOT USE FOR ELECTRIC HAND TOOLS	1/2-inch	Black
9	WARNING DO NOT POSITION EXHAUST UNDER HELICOPTER BLADES	1/2-inch	Red
10	CAUTION BEFORE TOWING LATCH PINTLE CLOSE TRIPLOCK INSTALL LOCK PIN	1/2-inch or decal PN 3613506	Black
11	DISENGAGE DRIVE CLUTCH BEFORE TOWING	1/2-inch	Black
12	DO NOT TOW WHEN LIGHTED CLUTCH ENGAGED	1/2-inch	Black
13	AIR CLEANER	1/2-inch	Black
14	DO NOT BLOCK	1/2-inch	Black
* - Standard caution/informational marking color will be non-reflective black. Standard safety/warning marking color will be non-reflective red.			

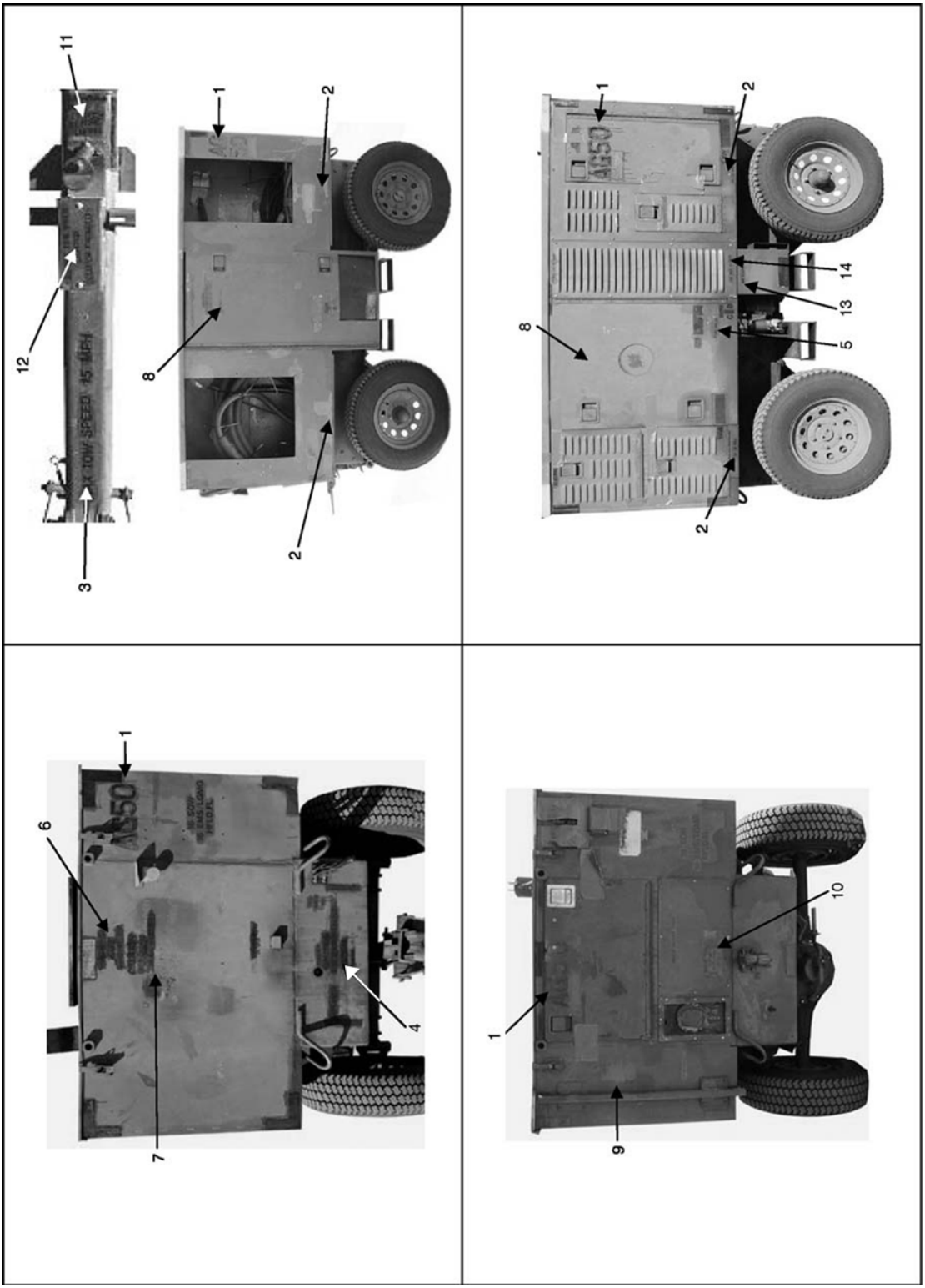

Figure 4-15. Auxiliary Ground Power Unit (AGPU)

Legend for Figure 4-16.			
Index No.	Markings	Size	Color*
1	FIELD NUMBERS	4-inch	Black
2	TIRE PRESSURE XX PSI	1/2-inch	Black
3	MAX TOW SPEED 15 MPH	1/2-inch	Black
4	WARNING DO NOT OPERATE WITH DOOR OPEN	1-inch	Red
5	OPEN DOOR BEFORE OPERATING AIR CONDITIONER	1/2-inch	Black
6	JP-8 FUEL FILLER INSIDE	1-inch	Black
7	EXTERNAL POWER RECEPTACLES FOR IMMERSION HEATERS 110 VAC/60/1 PHASE	1/2-inch	Black
* - Standard caution/informational marking color will be non-reflective black. Standard safety/warning marking color will be non-reflective red.			

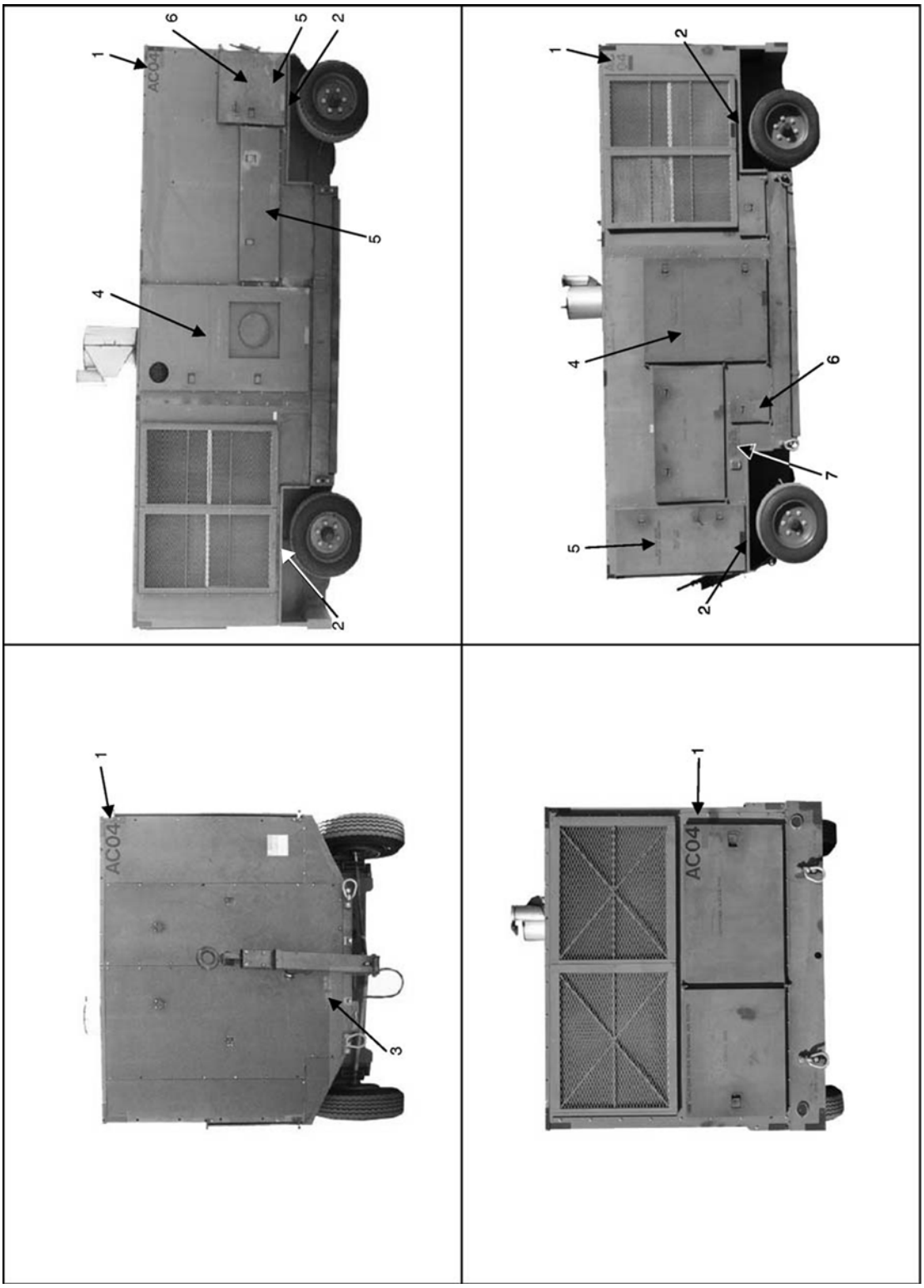

Figure 4-16. B-1/B-2 Air Conditioner, Trailer Mounted

Legend for Figure 4-17.			
Index No.	Markings	Size	Color*
1	FIELD NUMBERS	3-inch	Black
2	WARNING DO NOT OPERATE STAND WHILE STANDING ON LADDER CAPACITY 500 LBS	1/2-inch or decal PN 51B24895	Red
3	MAX TOW SPEED 5 MPH	1/2-inch	Black
4	CAUTION DO NOT STAND ON HANDRAILS	1/2-inch	Black
5	CAUTION BEFORE TOWING LATCH PINTLE CLOSE TRIPLOCK INSTALL LOCK PIN	1/2-inch or decal PN 3613506	Black
6	MARKINGS (Apply if platform area permits.) INSTALL LOCKPINS AFTER RAISING PLATFORM NOTE UNITS WITHOUT KICK PLATES INSTALLED SHOULD HAVE 1/2 INCH STENCIL PLACED ON UNIT IN CLEAR VIEW OF THE USER.	1-inch	Red
* - Standard caution/informational marking color will be non-reflective black. Standard safety/warning marking color will be non-reflective red.			

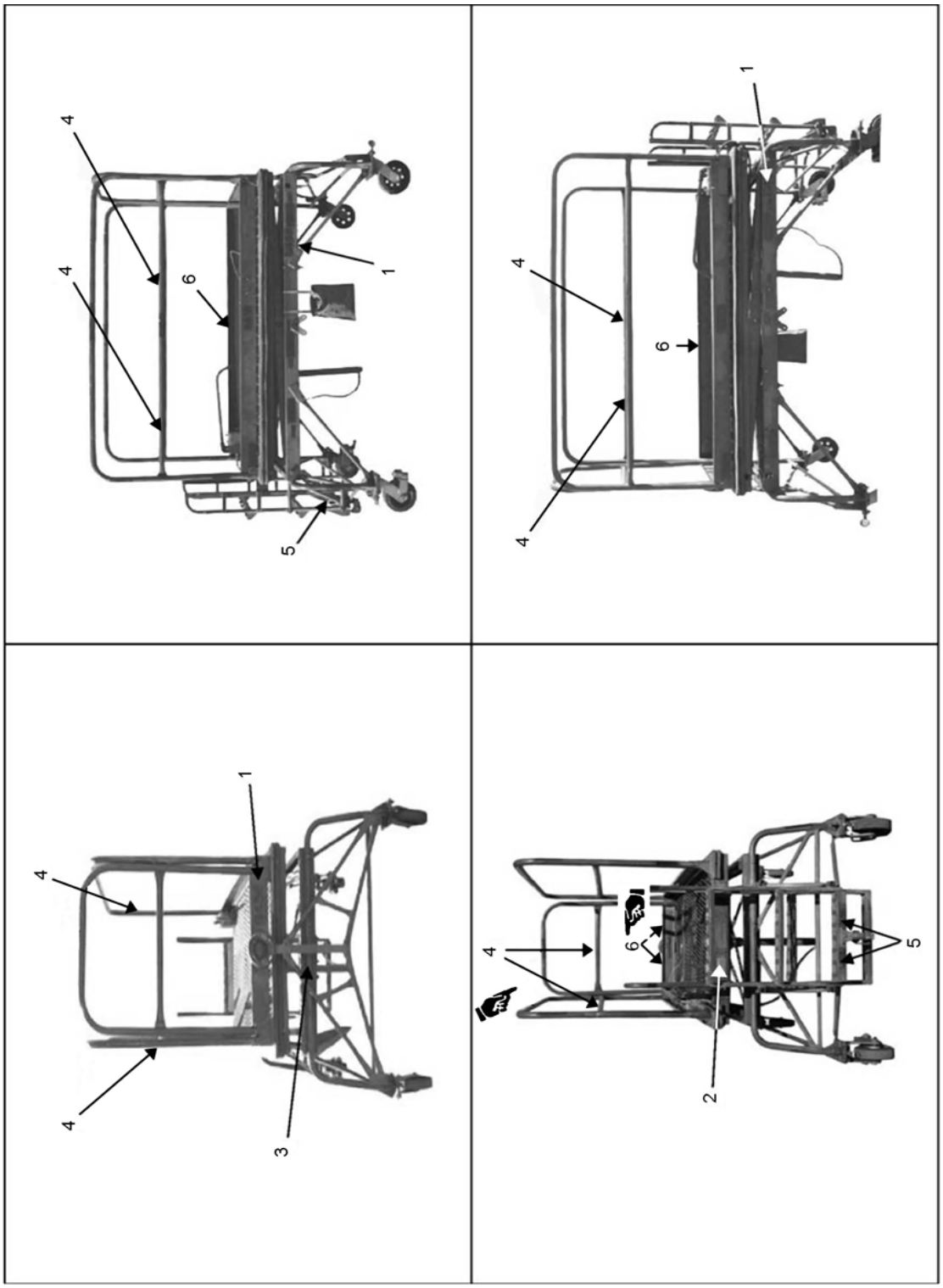

Figure 4-17. B-4 Maintenance Stand

Legend for Figure 4-18.			
Index No.	Markings	Size	Color*
1	FIELD NUMBERS	3-inch	Black
2	WARNING DO NOT OPERATE STAND WHILE STANDING ON LADDER CAPACITY 500 LBS	1/2-inch or decal PN 51B24895	Red
3	MAX TOW SPEED 5 MPH	1/2-inch	Black
4	CAUTION DO NOT STAND ON HANDRAILS	1/2-inch	Black
5	CAUTION BEFORE TOWING LATCH PINTLE CLOSE TRIPLOCK INSTALL LOCK PIN	1/2-inch or decal PN 3613506	Black
6	INSTALL LOCKPINS AFTER RAISING PLATFORM	1-inch	Red
* - Standard caution/informational marking color will be non-reflective black. Standard safety/warning marking color will be non-reflective red.			

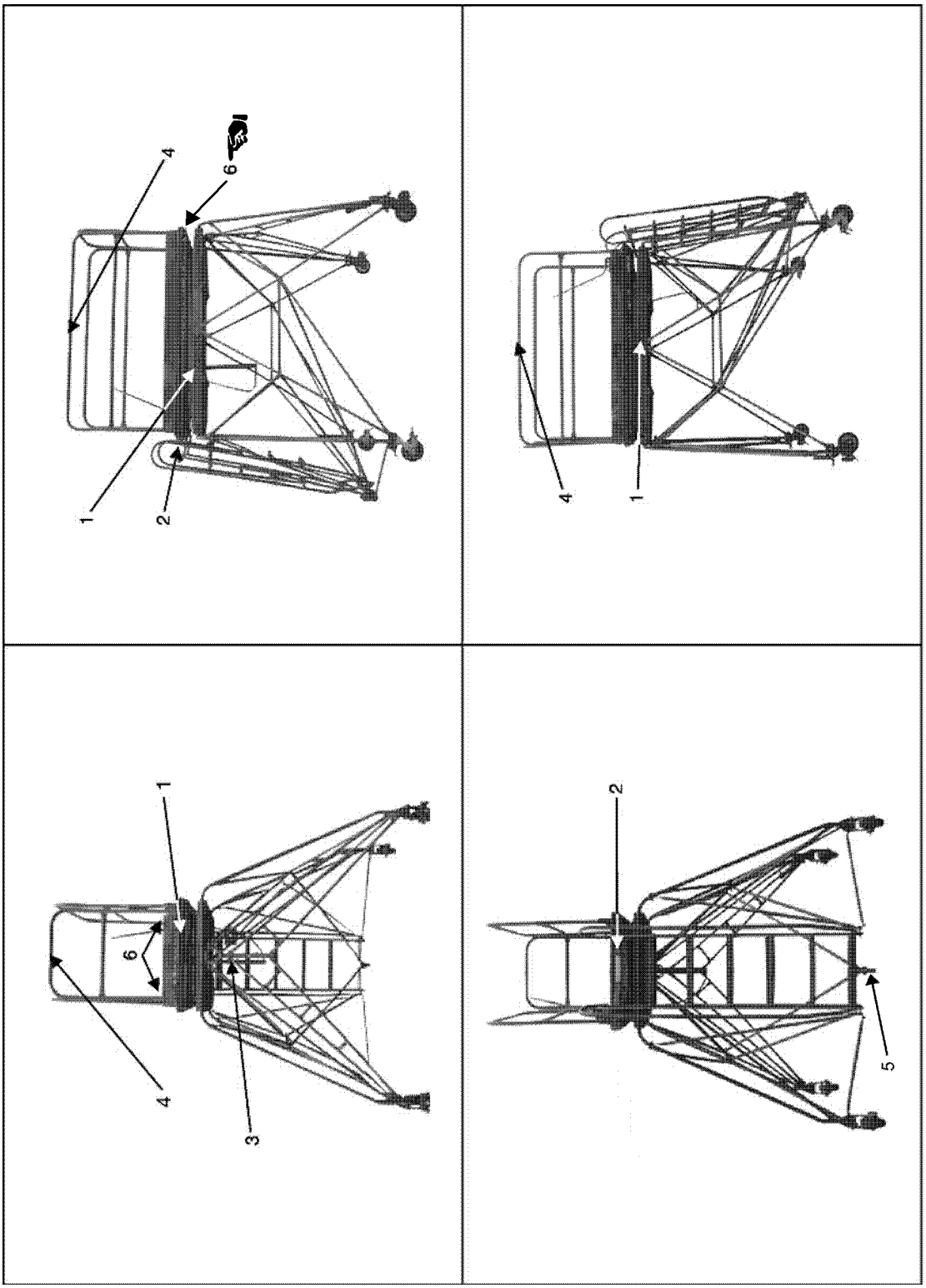

Figure 4-18. B-5 Maintenance Stand

Legend for Figure 4-19.			
Index No.	Markings	Size	Color*
1	FIELD NUMBERS	4-inch	Black
2	MAX LOAD 500 LB	1/2-inch	Black
3	MAX TOW SPEED 5 MPH	1/2-inch	Black
4	CAUTION DO NOT STAND ON HANDRAILS	1/2-inch	Black
5	WARNING IS RAM LOCK ENGAGED	1/2-inch	Red
6	CAUTION CLOSE VALVE AFTER LOCKING RAM	1/2-inch	Black
7	DO NOT JACK ABOVE RED ON RAM	1/2-inch	Black
8	RAISE LEGS BEFORE TOWING	1/2-inch	Black
9	MIL-PRF-83282	1-inch	Black
* - Standard caution/informational marking color will be non-reflective black. Standard safety/warning marking color will be non-reflective red.			

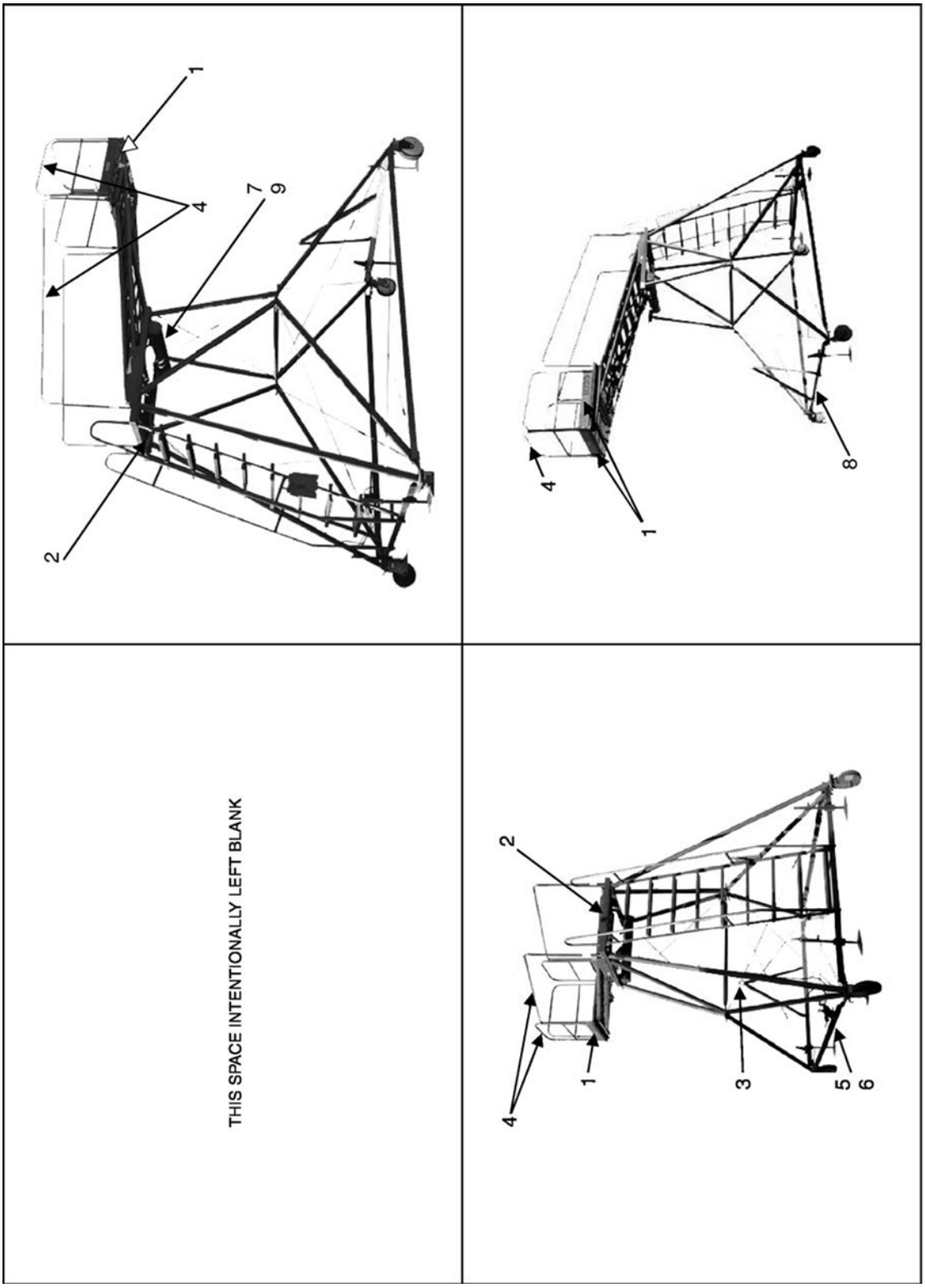

Figure 4-19. B-2 Maintenance Stand

Legend for Figure 4-20.			
Index No.	Markings	Size	Color*
1	FIELD NUMBERS	4-inch	Black
2	TIRE PRESSURE XX PSI	1/2-inch	Black
3	MAX LOAD 500 LBS	1/2-inch	Black
4	MAX TOW SPEED 5 MPH	1/2-inch	Black
5	CAUTION DO NOT STAND ON HANDRAILS	1/2-inch	Black
6	WARNING IS RAM LOCK ENGAGED	1/2-inch	Red
7	CAUTION CLOSE VALVE AFTER LOCKING RAM	1/2-inch	Black
8	WARNING DO NOT RAISE BEYOND RED BAND	1-inch	Red
9**	RAISE LEGS BEFORE TOWING	1/2-inch	Black
10	MIL-PRF-83282	1/2-inch	Black
11**	CAUTION BEFORE TOWING RETRACT JACK SCREWS UNTIL HAND TIGHT AND ENSURE HANDLE IS COLLASPED AGAINST THE SCREW MECHANISM	1/2-inch	Black
* - Standard caution/informational marking color will be non-reflective black. Standard safety/warning marking color will be non-reflective red.			
** - B-7 Maintenance Stand Only			

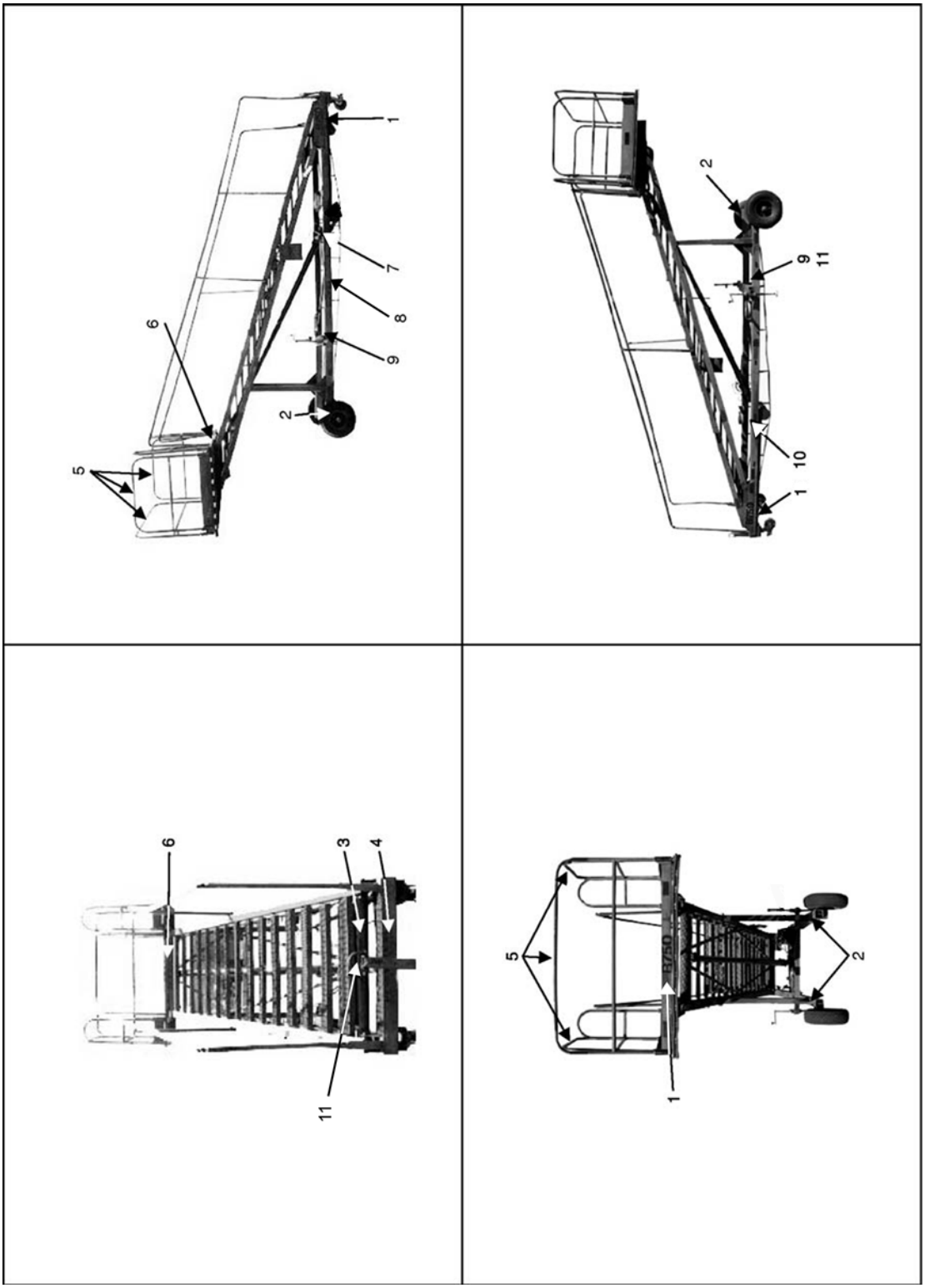

Figure 4-20. B-7/B-1 Maintenance Stand

Legend for Figure 4-21.			
Index No.	Markings	Size	Color*
1	FIELD NUMBERS	4-inch	Black
2	TIRE PRESSURE XX PSI	1/2-inch	Black
3	MAX TOW SPEED 10 MPH	1/2-inch	Black
4	DO NOT FORKLIFT	1/2-inch	Black
5	EMERGENCY SHUTDOWN LEVER INSIDE	1-inch	Red
6	JP-8/DIESEL	1-inch	Black
7	DANGER HOT EXHAUST	1-inch	Red
8	FUEL SHUTOFF	1/2-inch	Black
9	CAUTION DO NOT EXCEED TURNING RADIUS	1/2-inch	Black
* - Standard caution/informational marking color will be non-reflective black. Standard safety/warning marking color will be non-reflective red.			

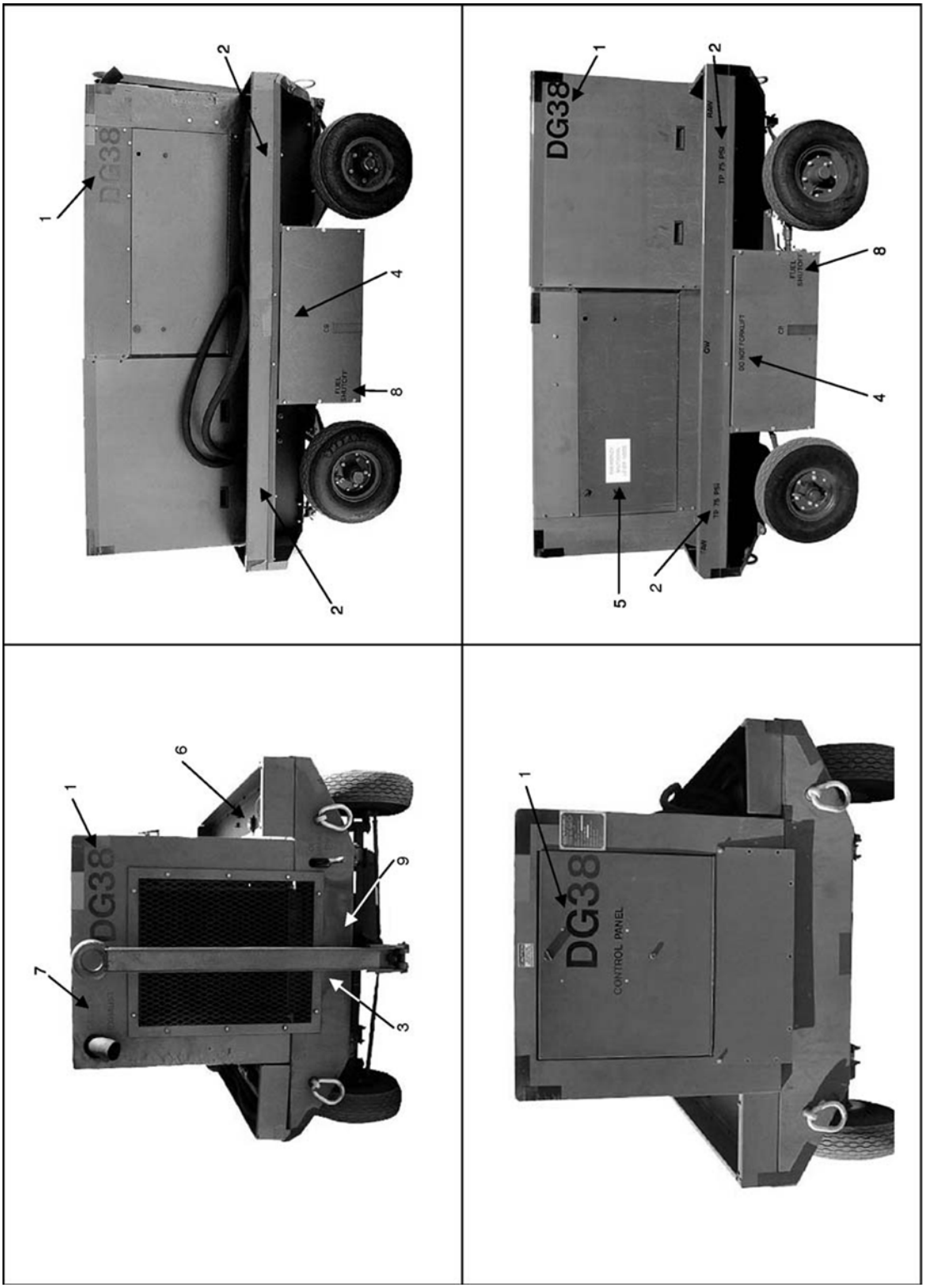

Figure 4-21. B809A Generator Set

Legend for Figure 4-22.			
Index No.	Markings	Size	Color*
1	FIELD NUMBERS	1-inch	Black
2	MAX LOAD 500 LBS	1/2-inch	Black
* - Standard caution/informational marking color will be non-reflective black. Standard safety/warning marking color will be non-reflective red.			

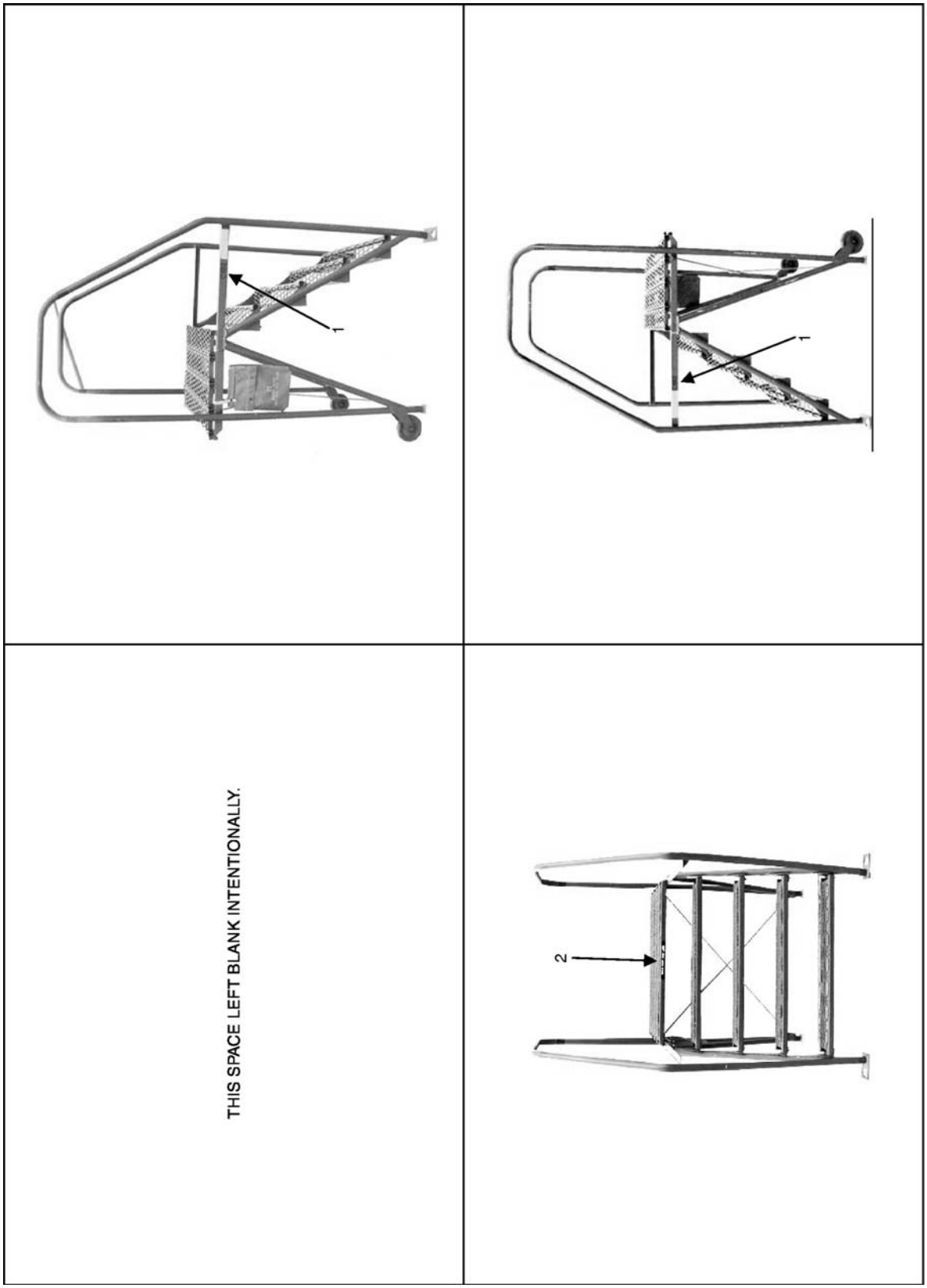

Figure 4-22. C-1 Maintenance Stand

Legend for Figure 4-23.			
Index No.	Markings	Size	Color*
1	FIELD NUMBERS	4-inch	Black
2	TIRE PRESSURE XX PSI	1/2-inch	Black
3	MAX TOW SPEED 15 MPH	1/2-inch	Black
4	HYDROSTATIC TEST C/W DATE AND DUE DATE	1/2-inch	Black
5	DO NOT PUSH HERE	1/2-inch	Black
6	CAUTION BEFORE TOWING LATCH PINTLE CLOSE TRIPLOCK INSTALL LOCK PIN	1/2-inch or decal PN 3613506	Black
* - Standard caution/informational marking color will be non-reflective black. Standard safety/warning marking color will be non-reflective red.			

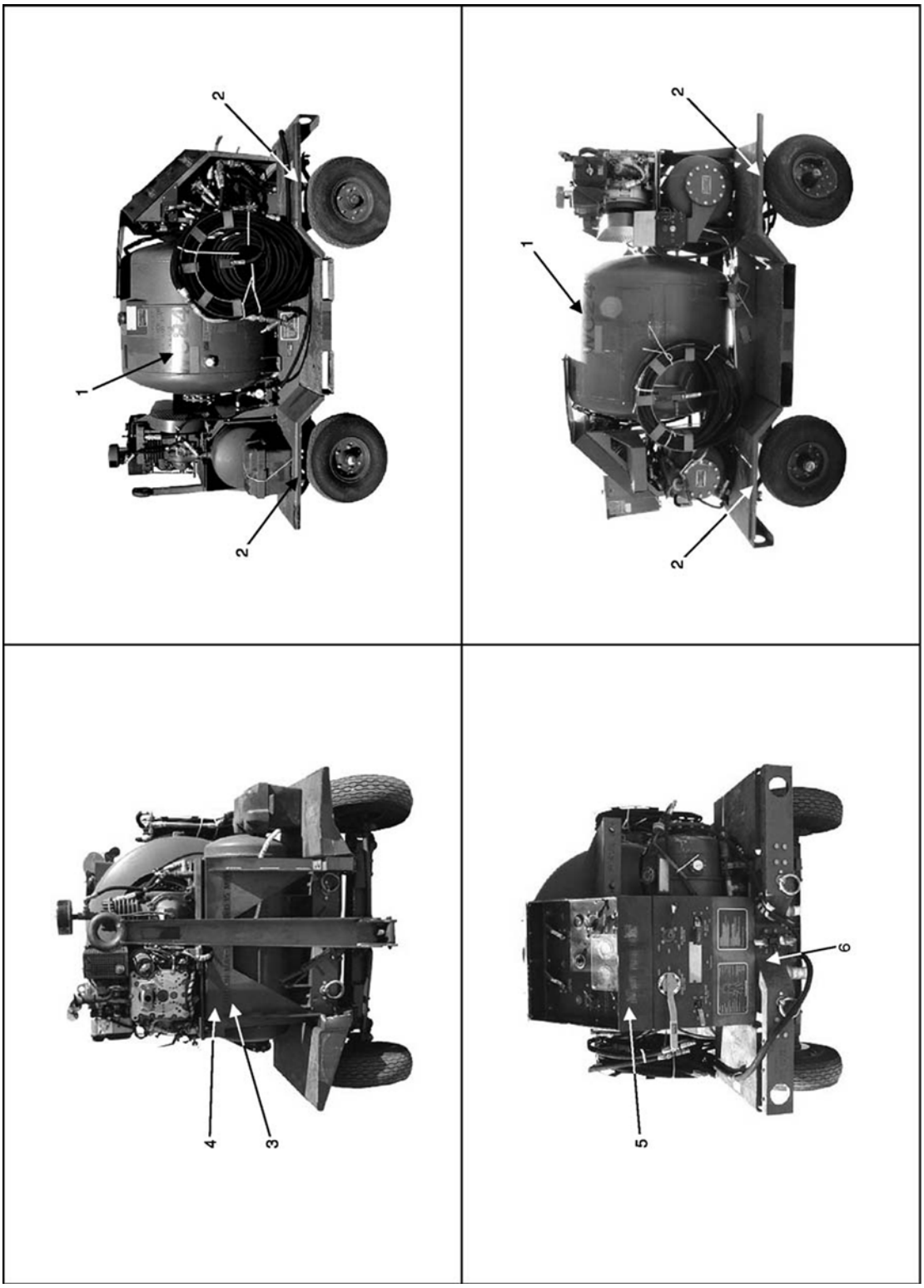

Figure 4-23. Spraying Unit, Corrosion Control Wash Cart

Pages 4-46 and 4-47 were deleted in their entirety to include figure 4-24 and it's legend.

Legend for Figure 4-25.			
Index No.	Markings	Size	Color*
1	FIELD NUMBERS	4-inch	Black
2	TIE DOWN MAX LOAD 475 LBS	1/2-inch	Black
3	DANGER HIGH VOLTAGE DO NOT OPEN DURING NORMAL OPERATIONS	1/2-inch or small decal	Red
4	DANGER HIGH VOLTAGE DO NOT OPEN DURING NORMAL OPERATIONS	1/2-inch or large decal	Red
5	WARNING BEFORE TURNING ON THE CIRCUIT BREAKER TO THIS UNIT ENSURE THE INPUT POWER SUPPLIED TO THIS UNIT MATCHES THE INPUT TERMINALS ON THE UNIT INPUT AUTO-TRANSFORMER: (I.E. 480V LINE TO LINE INPUT POWER - USE 480V TERMINALS ON THE TRANSFORMER)	1/2-inch or decal	Red
6	EMERGENCY STOP	1/2-inch or decal	Red
7	CAUTION THIS CABINET IS ENVIRONMENTALLY SEALED DO NOT OPEN THIS DOOR IN INCLEMENT WEATHER CONDI-TIONS	1/2-inch or decal	Black
8	CB-1	1/2-inch or decal	Black
9	ON OFF	1/2-inch	Black
10	RESET	1/2-inch	Black
11	CAUTION PARTS WITH HIGH TEMPERATURE INSIDE DURING NORMAL OPERATION	1/2-inch or decal	Black
* - Standard caution/informational marking color will be non-reflective black. Standard safety/warning marking color will be non-reflective red.			

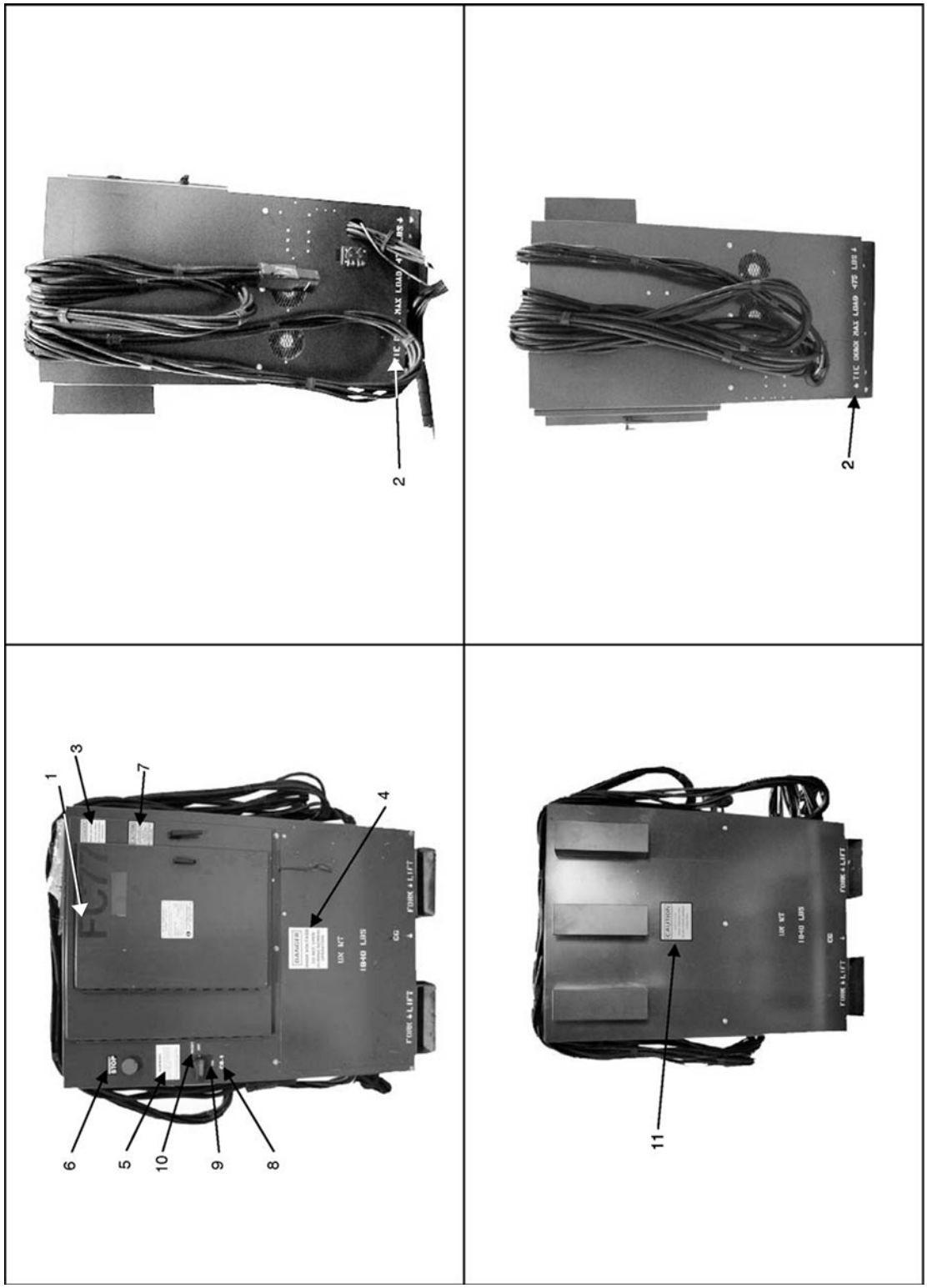

Figure 4-25. EPU-6 Aircraft Power Supply

Legend for Figure 4-26.			
Index No.	Markings	Size	Color*
1	FIELD NUMBERS	4-inch	Black
2	REMOVE PRIOR TO OPERATION	1/2-inch	Black
3	LIFT FROM FORKLIFT TUBES ONLY	1/2-inch	Black
4	208 VOLTS	1/2-inch	Black
5	OPEN TO RUN	1/2-inch	Black
* - Standard caution/informational marking color will be non-reflective black. Standard safety/warning marking color will be non-reflective red.			

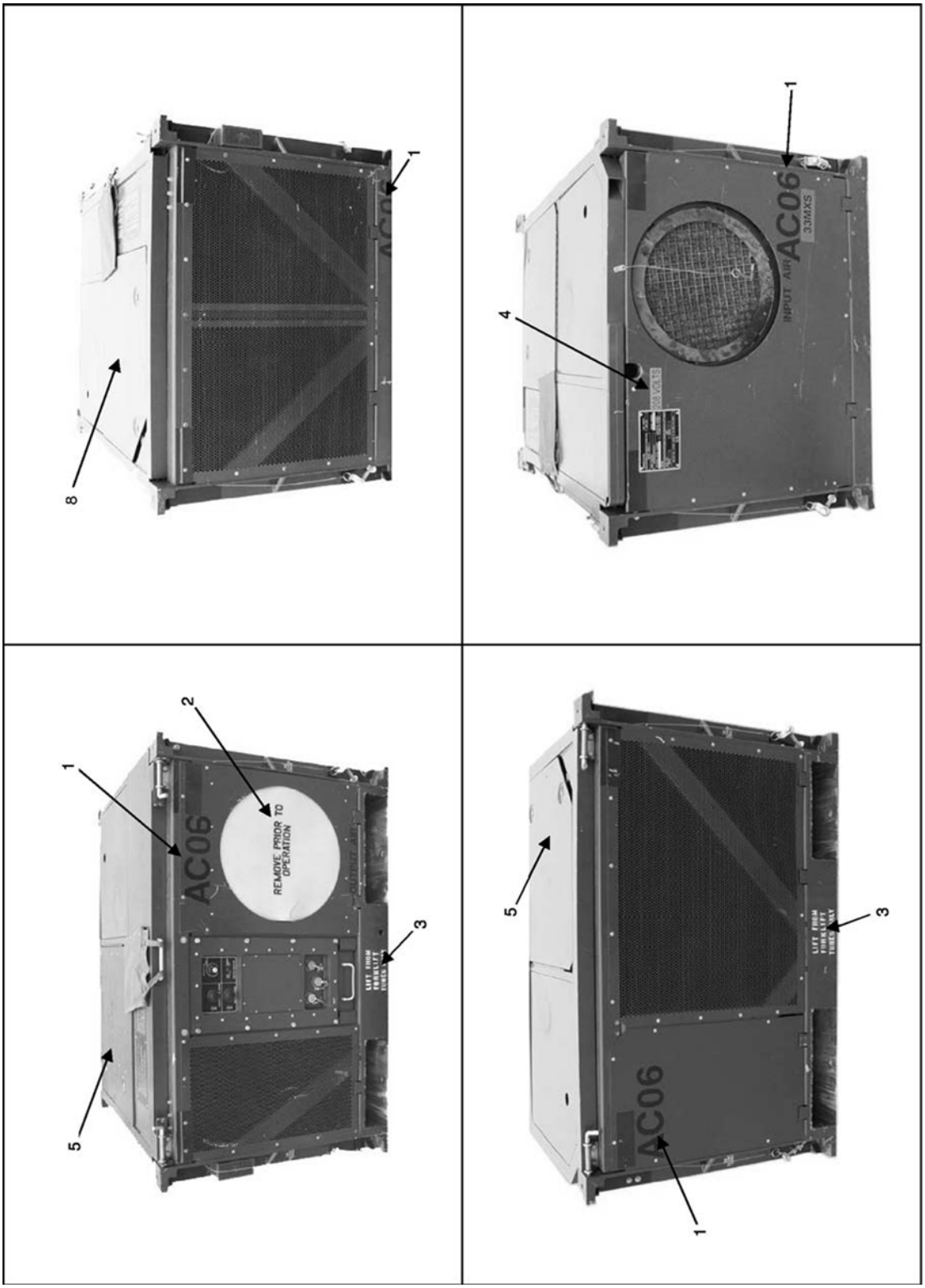

Figure 4-26. FDECU-3 Environmental Control Unit

Legend for Figure 4-27.			
Index No.	Markings	Size	Color*
1	FIELD NUMBERS	4-inch	Black
2	TIRE PRESSURE XX PSI	1/2-inch	Black
3	MAX TOW SPEED 15 MPH	1/2-inch	Black
4	WARNING RECLAIMED JP-8	4-inch	Red
5	DANGER NO SMOKING OR OPEN FLAME PERMITTED WITHIN 50 FEET	decal or 3-inch	Red
* - Standard caution/informational marking color will be non-reflective black. Standard safety/warning marking color will be non-reflective red. Markings apply to all Fuel Bowser models.			

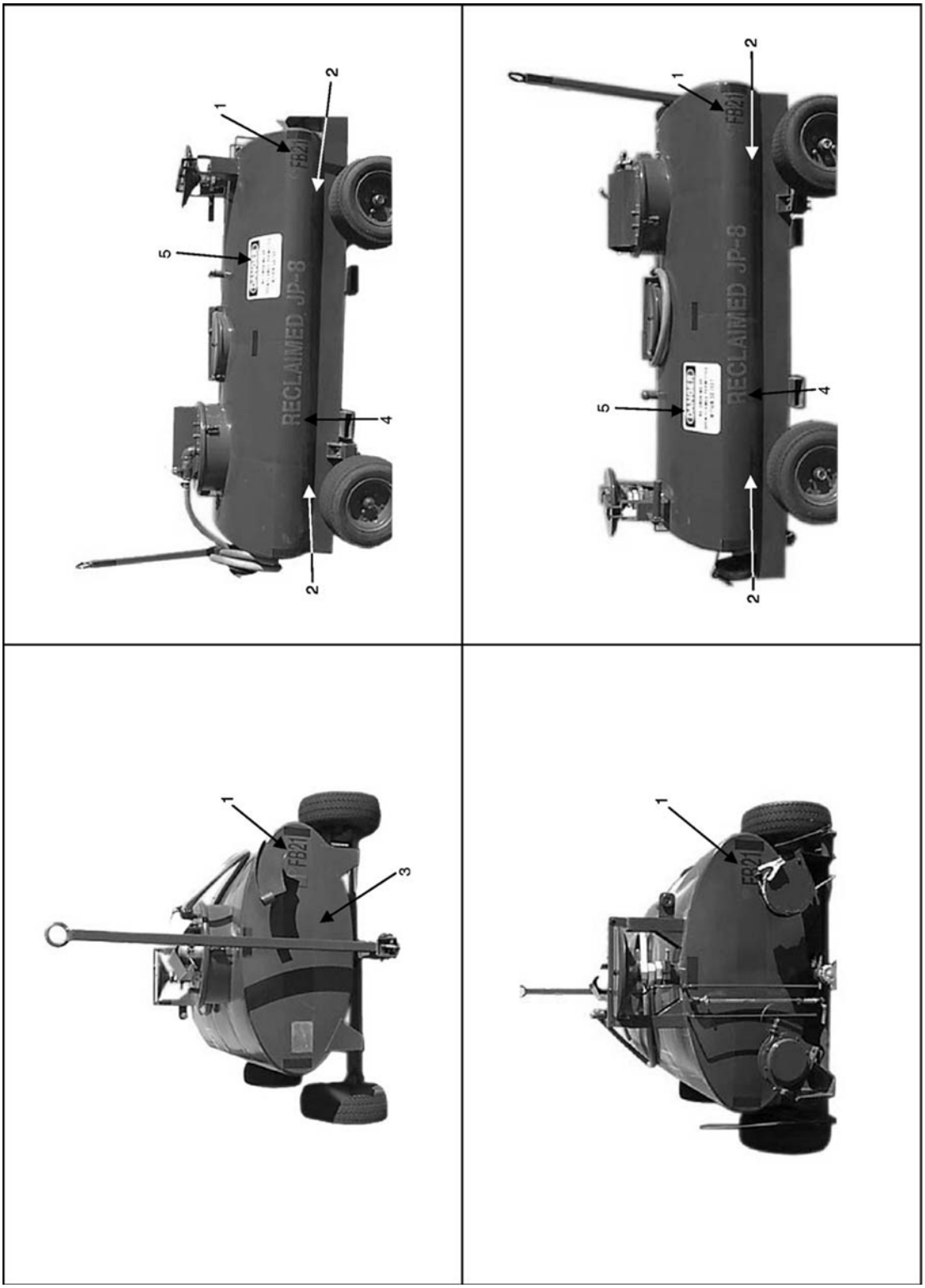

Figure 4-27. Fuel Bowser 400 Gallon

Legend for Figure 4-28.			
Index No.	Markings	Size	Color*
1**	FIELD NUMBERS (SEE NOTE)	4-inch	Black
2**	TIRE PRESSURE XX PSI	1/2-inch	Black
3	MAX TOW SPEED 15 MPH	1/2-inch	Black
4	DANGER HOT EXHAUST	1-inch	Red
5**	DO NOT FORKLIFT	1/2-inch	Black
6	CAUTION BEFORE TOWING LATCH PINTLE CLOSE TRIPLOCK INSTALL LOCK PIN	1/2-inch or decal PN 3613506	Black
7**	DANGER UNIT UNSAFE IN FUEL VAPOR AREA	1-inch	Red (If metal placard/decal is missing
8	JP-8	1-inch	Black
* - Standard caution/informational marking color will be non-reflective black. Standard safety/warning marking color will be non-reflective red.			
** - Stencil approximately the same location on both sides of the unit.			
NOTE: Figure 4-28 includes views of various models of the H-1 Heater. Variations in the location of the Field Numbers on the H-1 Heater is authorized provided the numbers are consistently located on all of the H-1 Heaters in an organization.			
NOTE: Markings apply to all H-1 Heater models.			

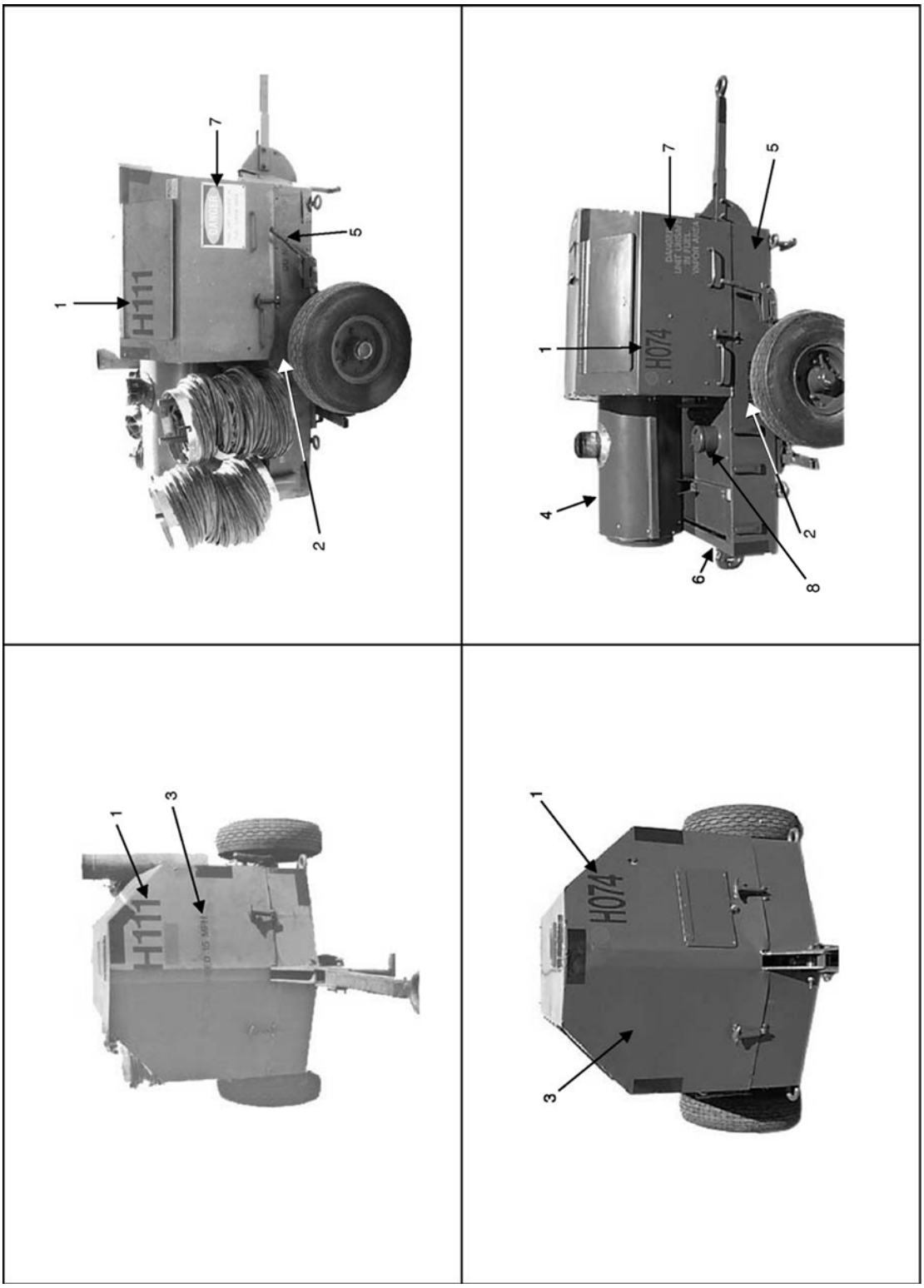

Figure 4-28. H-1 Heater

Legend for Figure 4-29.			
Index No.	Markings	Size	Color*
1	FIELD NUMBERS	4-inch	Black
2	TIRE PRESSURE XX PSI	1/2-inch	Black
3	MAX TOW SPEED 15 MPH	1/2-inch	Black
4	USE CABLE GUARDS WHEN HOISTING	1-inch	Black
5	DO NOT FORKLIFT	1/2-inch	Black
6	DOOR MUST BE OPEN DURING OPERATION	1/2-inch	Black
7	WARNING THIS UNIT WIRED FOR 220 VOLT, 60 HZ OR 400 VOLTS, 60 HZ	1-inch	Red
8	CAUTION BEFORE TOWING LATCH PINTLE (IF PINTLE HOOK INSTALLED) CLOSE TRIPLOCK INSTALL LOCK PIN	1/2-inch or decal PN 3613506	Black
9	WARNING A CONTINUOUS GROUND SYSTEM MUST BE AVAILABLE BETWEEN POWER SOURCE, HEATER AND UNIT OR AREA BEING SUPPLIED WITH CONDITIONED AIR	1-inch	Red
* - Standard caution/informational marking color will be non-reflective black. Standard safety/warning marking color will be non-reflective red.			
NOTE: Use appropriate stencil per unit configuration.			
NOTE: HDU-13/M Model H41 utilizes 200V, 400 HZ. Adjust stencil to reflect proper configuration.			

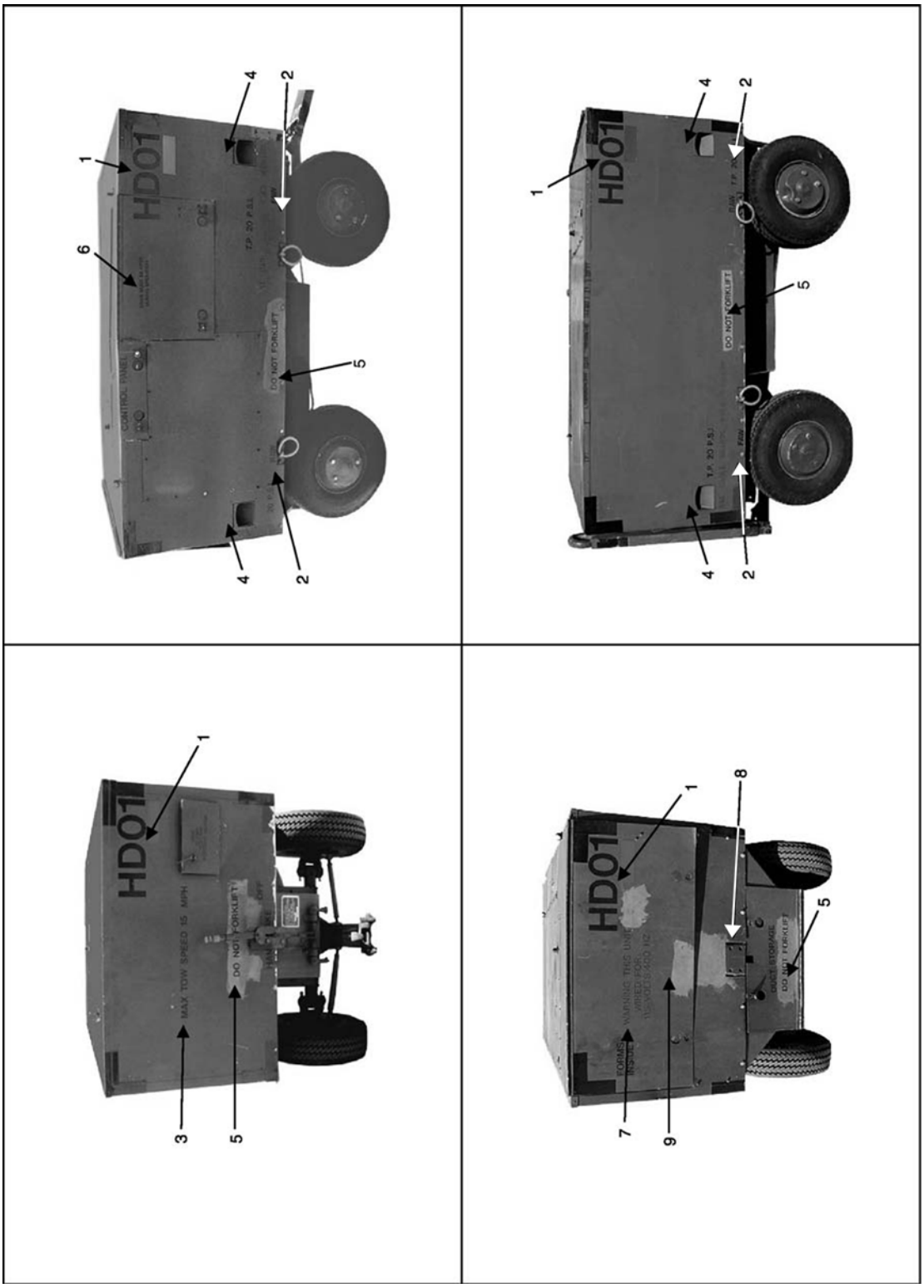

Figure 4-29. HDU-13M Heater

Legend for Figure 4-30.			
Index No.	Markings	Size	Color*
1	FIELD NUMBERS	4-inch	Black
2	TIRE PRESSURE XX PSI	1/2-inch	Black
3	FRONT TIRE PRESSURE 5 PSI	1/2-inch	Black
4	MAX TOW SPEED 10 MPH	1/2-inch	Black
5	MIL-PRF-83282 (OR APPLICABLE HYDRAULIC FLUID)	1-inch	Black
* - Standard caution/informational marking color will be non-reflective black. Standard safety/warning marking color will be non-reflective red.			
NOTE: Figure 4-30 includes views of various models of the Hydraulic Cart.			

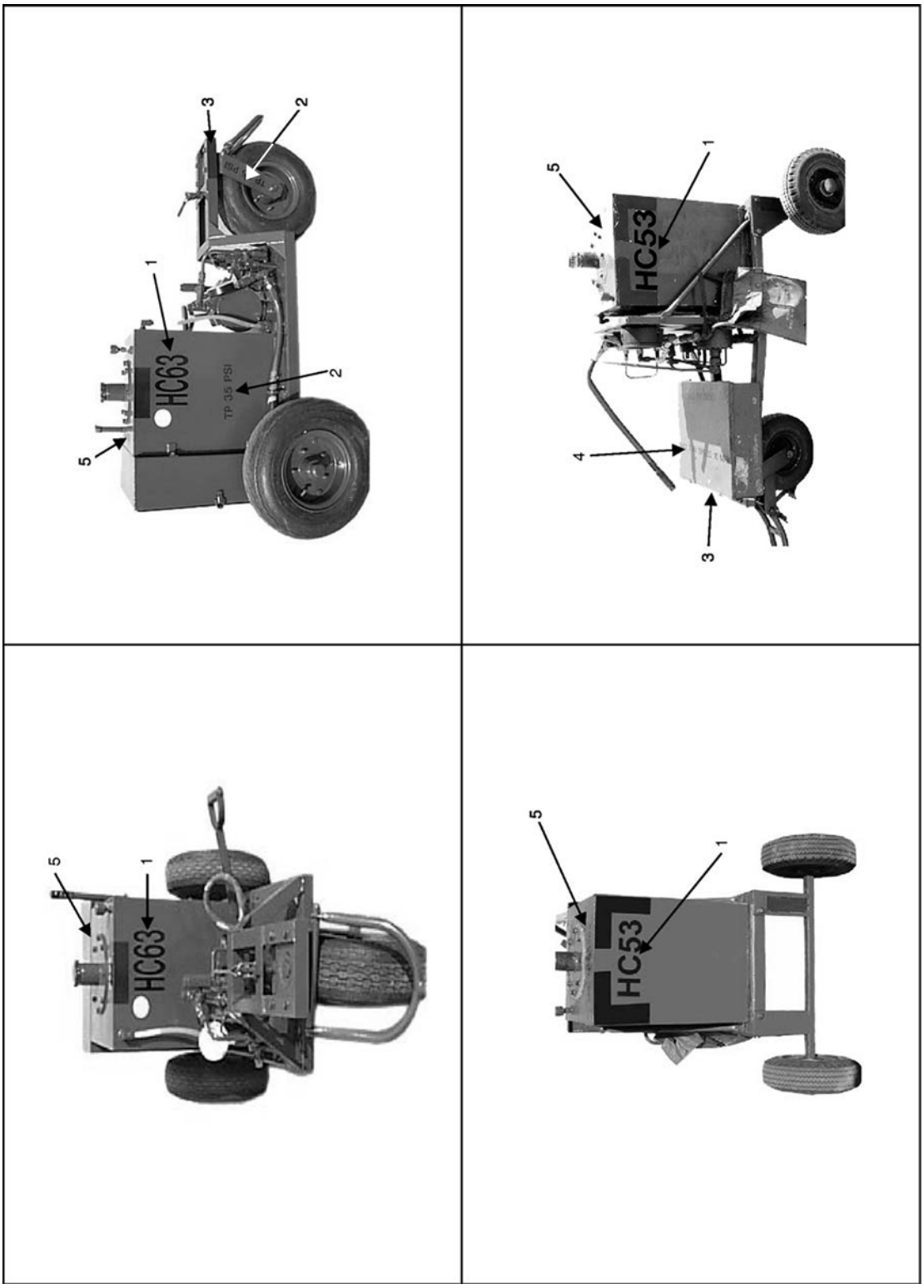

Figure 4-30. Hydraulic Cart

Legend for Figure 4-31.			
Index No.	Markings	Size	Color*
1	FIELD NUMBERS	4-inch	Black
2	MAX CAP XX TONS (SEE NOTE)[1]	1-inch	Black
3	MIL-PRF-83282	1-inch	Black
4	RISE INDICATOR (IF APPLICABLE)	Decal	
5	MAX SCREW EXTENSION XX INCHES (SEE NOTE)[2]	1-inch	Black
* - Standard caution/informational marking color will be non-reflective black. Standard safety/warning marking color will be non-reflective red.			
[1] - Substitute the appropriate tonnage capacity in place of the XX. [2] - Max 18 inches for 20 and 10 Ton Jacks.			
NOTE: Figure 4-31 includes views of various models of 10 - 30 Ton Hydraulic Jacks.			
NOTE: Markings are typical of all 10 - 30 Ton Hydraulic Jacks and apply to all of the different hydraulic jack models. Reference end item TO to validate capacity and ext. screw height.			

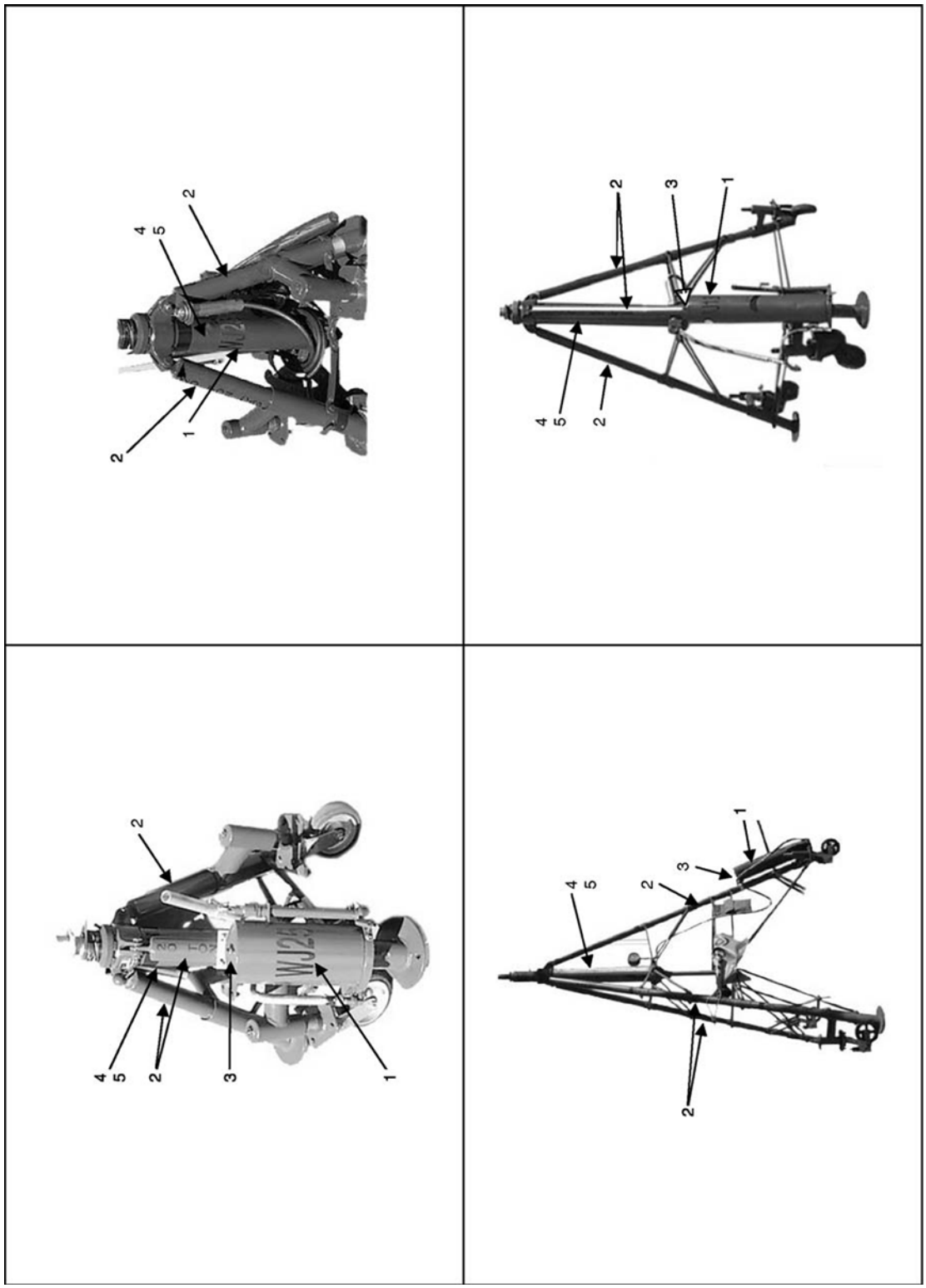

Figure 4-31. Jack, Hydraulic 10 - 30 Ton

Legend for Figure 4-32.			
Index No.	Markings	Size	Color*
1	FIELD NUMBERS	2-inch	Black
2	MAX CAP 35 TONS	1-inch	Black
3	MAX TOW SPEED 5 MPH	1-inch	Black
4	MIL-PRF-83282	1-inch	Black
* - Standard caution/informational marking color will be non-reflective black. Standard safety/warning marking color will be non-reflective red.			
NOTE: Figure 4-32 includes views of various models of the 35 Ton Axle Jack.			
NOTE: Markings apply to all 35 Ton Axle Jack models. Markings shown are one side only. Apply stencil decals to like locations on each side of the unit.			

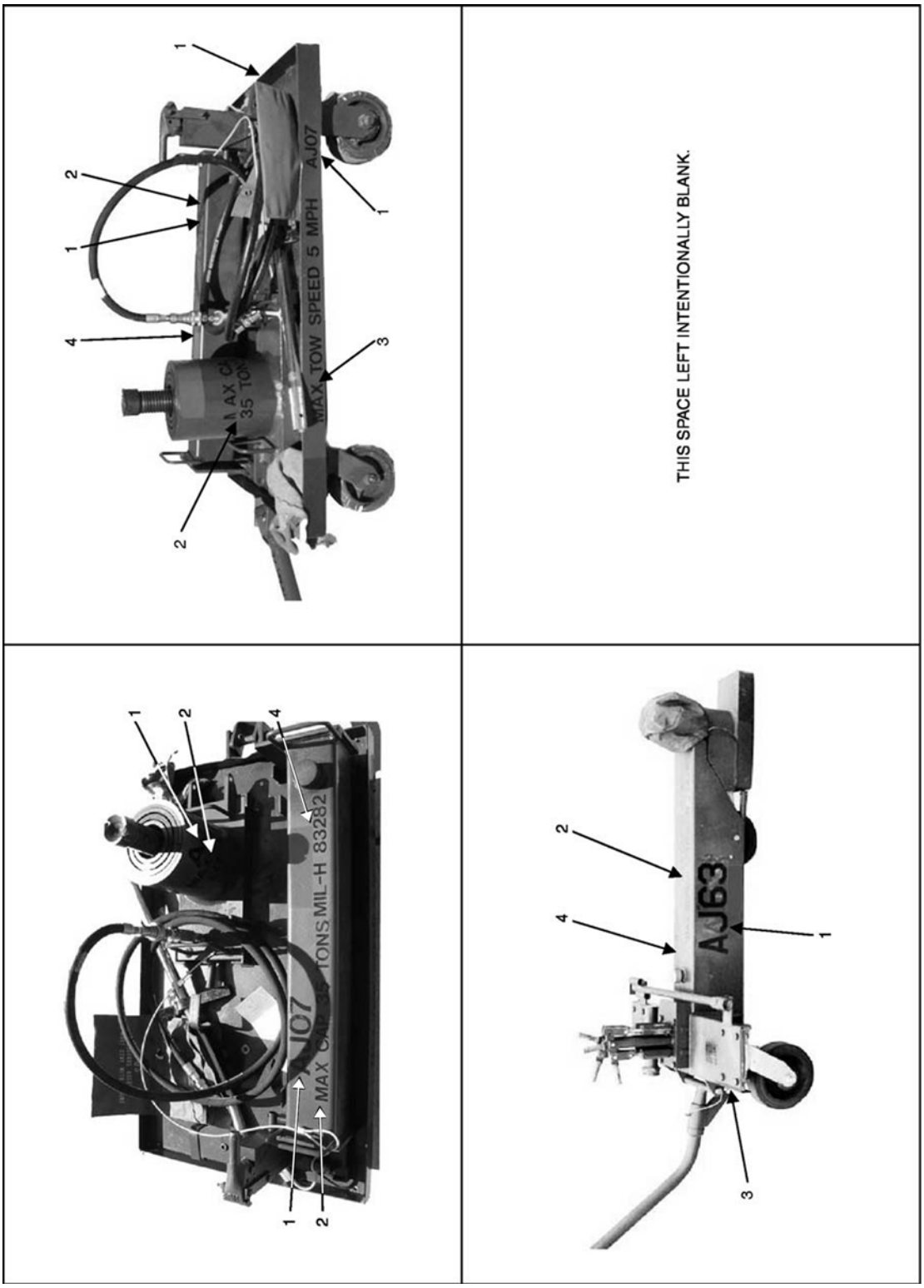

Figure 4-32. Jack, 35 Ton, Axle

Legend for Figure 4-33.			
Index No.	Markings	Size	Color*
1	FIELD NUMBERS	4-inch	Black
* - Standard caution/informational marking color will be non-reflective black. Standard safety/warning marking color will be non-reflective red.			

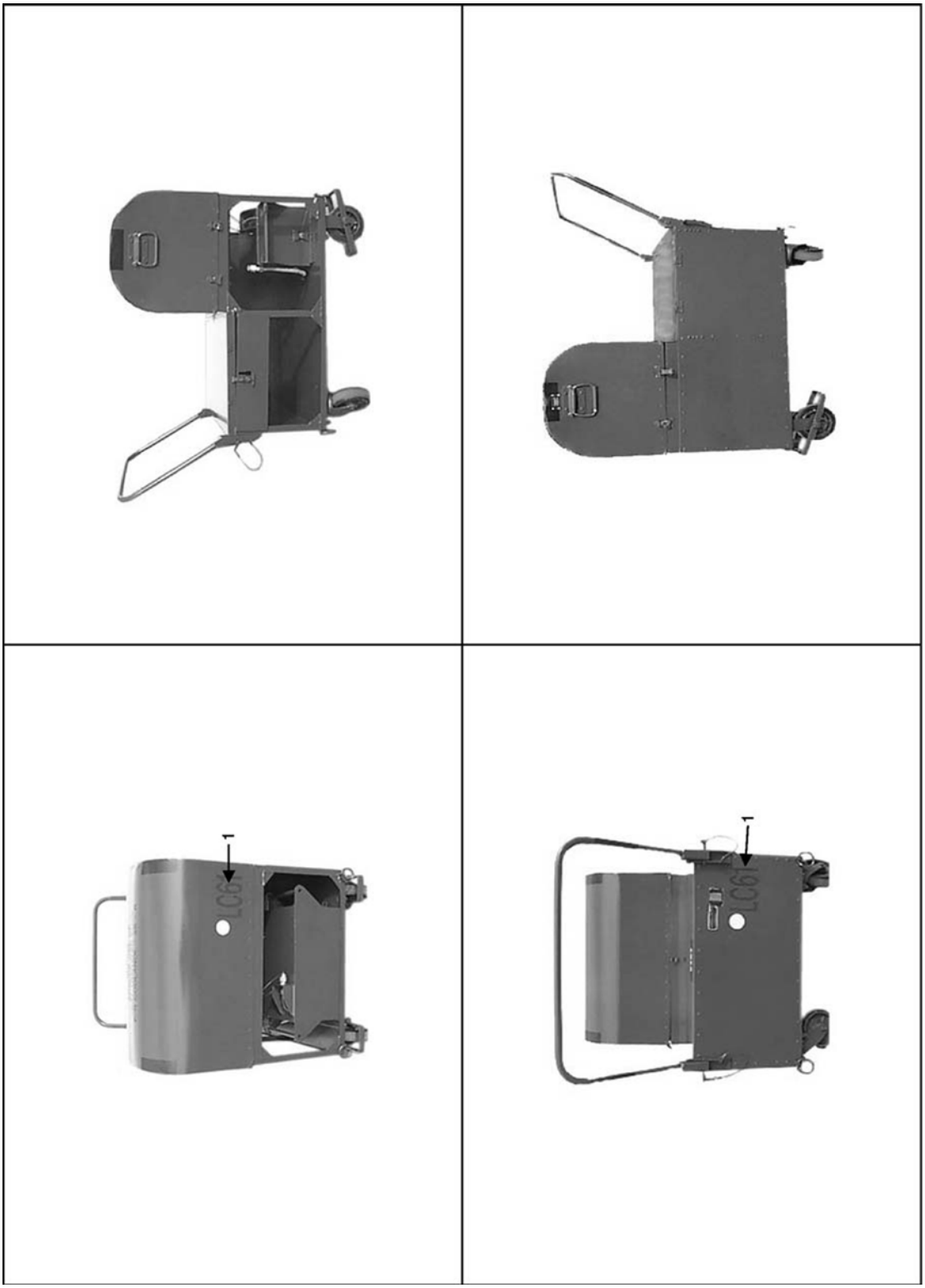

Figure 4-33. Liquid Cooling Service (LCS) Cart

Legend for Figure 4-34.			
Index No.	Markings	Size	Color*
1	FIELD NUMBERS	4-inch	Black
2	TIRE PRESSURE XX PSI	1/2-inch	Black
3	TIRE PRESSURE XX PSI MAXIMUM	1/2-inch	Black
4	CAUTION - DO NOT OVER INFLATE	1/2-inch	Black
5	MAX TOW SPEED 10 MPH	1/2-inch	Black
6	U.S. AIR FORCE LIQUID OXYGEN NO SMOKING WITHIN 50 FEET KEEP FREE FROM OIL & GREASE FOR BREATHING PURPOSES ONLY	1-3/4-inch 1-3/4-inch 4-inch 1-inch or decal	Black Red Red Red
7	CAUTION GROUND CLAMP PLUGS SHALL NOT BE ALLOWED TO DRAG ACROSS THE RAMP CLAMPS SHALL BE CLAMPED TO REELS ON EQUIPMENT	1/2-inch or decal	Black
8	EMPTY (AS REQUIRED)	1/2-inch	Black on White box
9	WARNING ALL VALVES MUST BE CLOSED AND AN OVERBOARD VENT LINE ATTACHED TO THE VENT LINE DISCONNECT FITTING DURING AIR TRANSPORT	Stencil or decal	Red
10	WARNING DO NOT FILL TANK THROUGH THIS LINE FOR SERVICING ONLY	1/2-inch	Red
* - Standard caution/informational marking color will be non-reflective black. Standard safety/warning marking color will be non-reflective red.			
NOTE: Figure 4-34 includes views of various models of the Liquid Oxygen Cart.			
NOTE: Markings apply to all Liquid Oxygen Cart models, except as noted.			

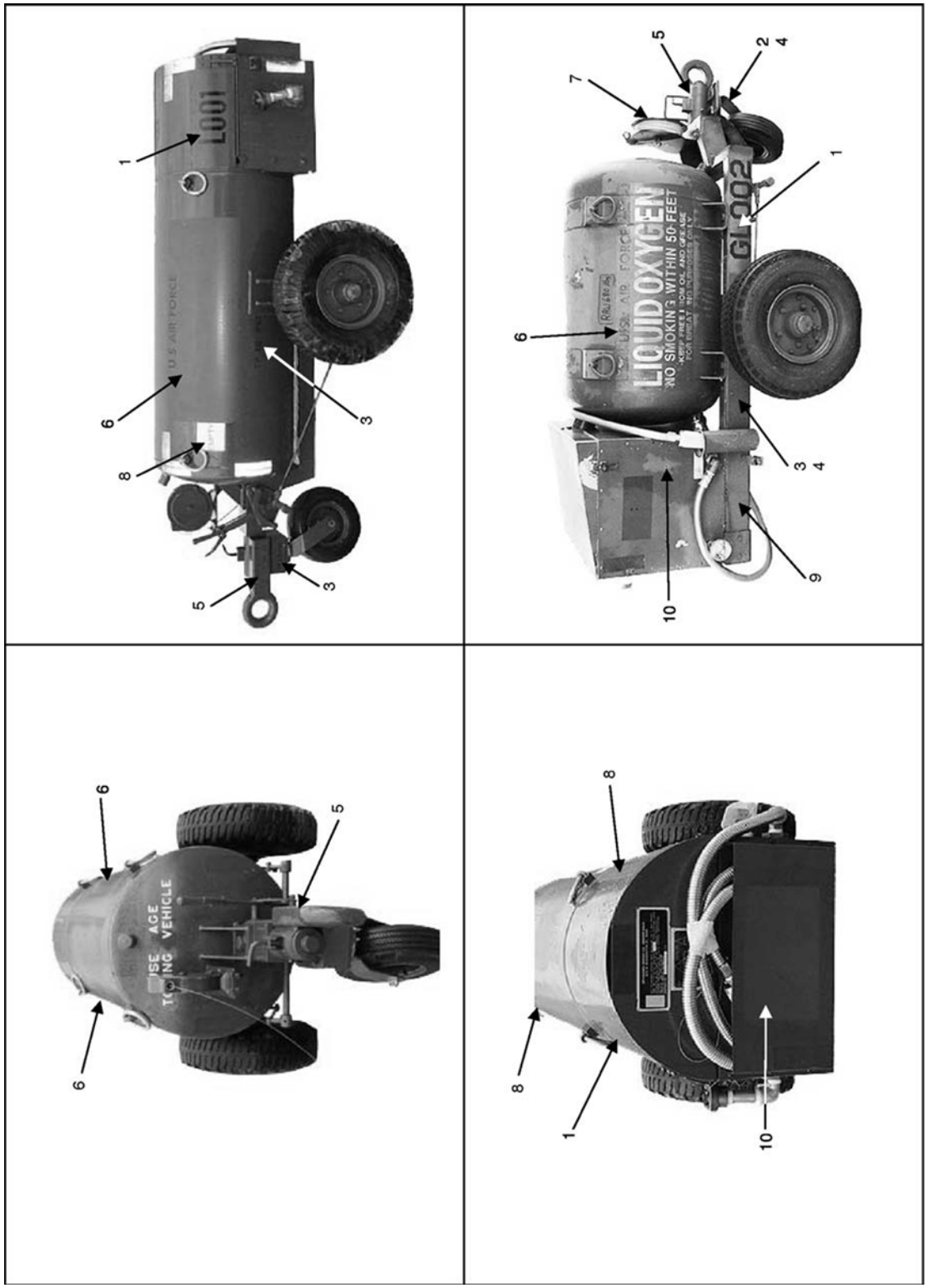

Figure 4-34. Liquid Oxygen Cart

Legend for Figure 4-35.			
Index No.	Markings	Size	Color*
1	FIELD NUMBERS[1]	4-inch	Black
2	TIRE PRESSURE XX PSI	1/2-inch	Black
3	TIRE PRESSURE XX PSI	1/2-inch	Black
4	MAX TOW SPEED 15 MPH	1/2-inch	Black
5	U.S. AIR FORCE LIQUID NITROGEN KEEP FREE FROM OIL AND GREASE	Decal or vinyl letters	
6**	HYDROSTATIC TEST C/W DATE AND DUE DATE	1/2-inch	Black
7	CAUTION BEFORE TOWING LATCH PINTLE CLOSE TRIPLOCK INSTALL LOCK PIN	1/2-inch or decal PN 3613506	Black
* - Standard caution/informational marking color will be non-reflective black. Standard safety/warning marking color will be non-reflective red.			
** - Marking location not displayed. Stencil applied on interior tank.			
[1] - LN2 Cart (Old Style-Rounded Corners) - Field Number on Front Left Corner of Roof.			
NOTE: Figure 4-35 includes views of various models of the LN2 Liquid Nitrogen Cart.			
NOTE: Markings apply to all LN2 Liquid Nitrogen Cart models, except as noted.			

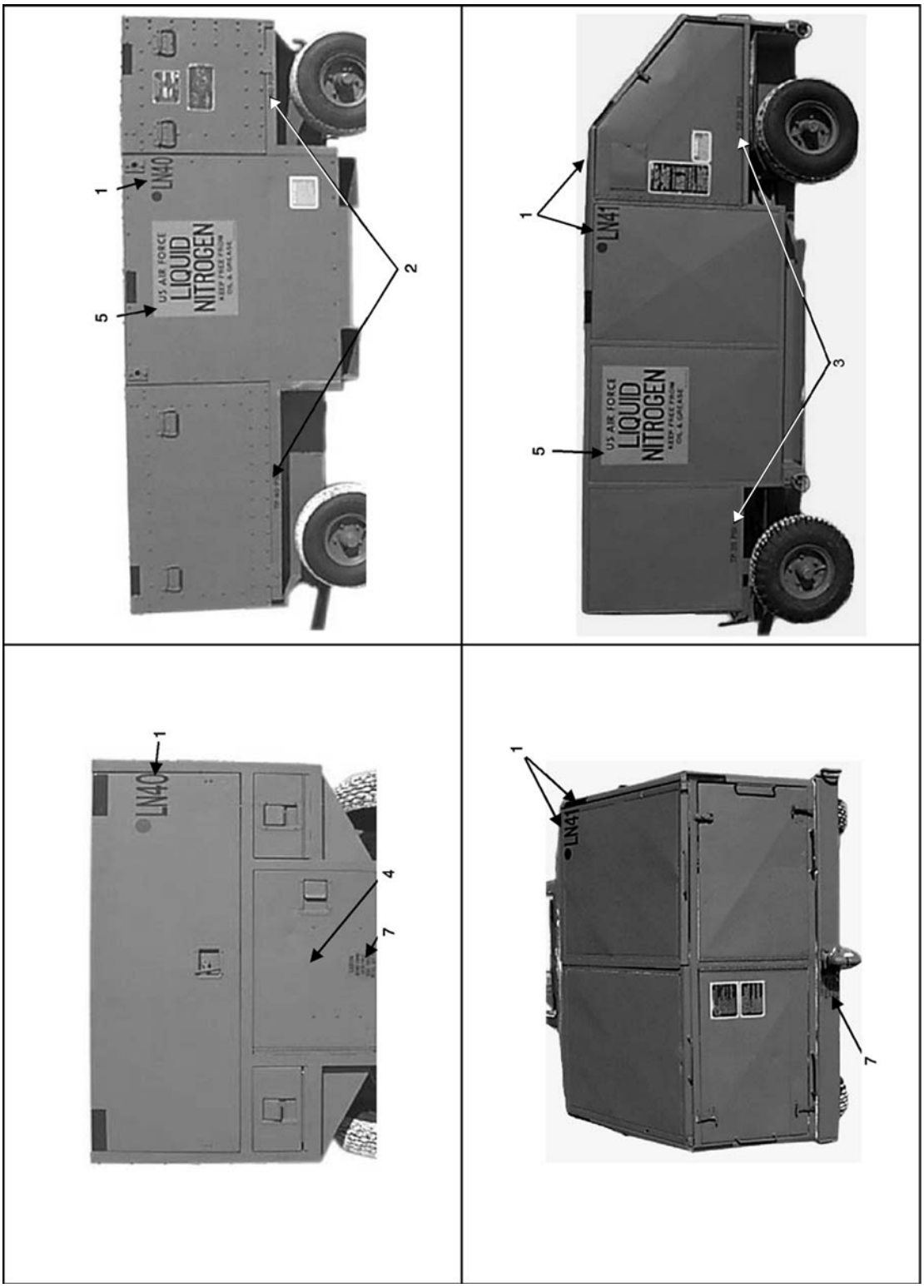

Figure 4-35. LN2 Liquid Nitrogen Cart

Legend for Figure 4-36.			
Index No.	Markings	Size	Color*
1	FIELD NUMBERS	4-inch	Black
2	TIRE PRESSURE XX PSI	1/2-inch	Black
3	MAX TOW SPEED 15 MPH	1/2-inch	Black
4	DOOR MUST BE OPEN DURING OPERATION	1/2-inch	Black
5	JP-8	1-inch	Black
6	DO NOT FORKLIFT	1/2-inch	Black
7**	HYDROSTATIC TEST C/W DATE AND DUE DATE	1/2-inch	Black
8	DANGER HOT EXHAUST	1 -inch	Red
9	CAUTION BEFORE TOWING LATCH PINTLE CLOSE TRIPLOCK INSTALL LOCK PIN	1/2-inch or decal PN 3613506	Black
* - Standard caution/informational marking color will be non-reflective black. Standard safety/warning marking color will be non-reflective red.			
** - Hydrostatic test date is stenciled on the tank located on the interior of the unit.			

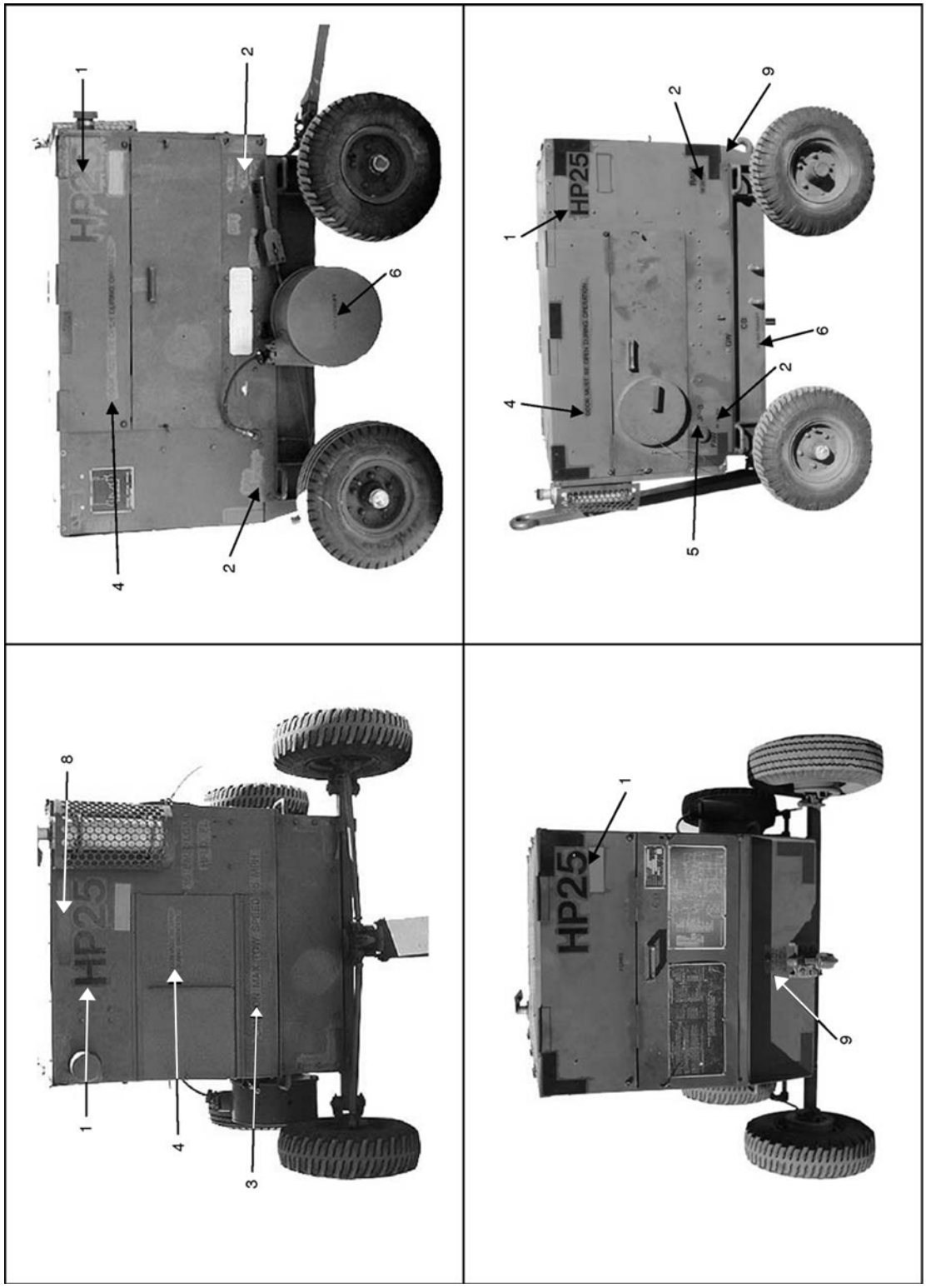

Figure 4-36. MC-1A High Pack Air Compressor

Legend for Figure 4-37.			
Index No.	Markings	Size	Color*
1	FIELD NUMBERS	4-inch	Black
2	TIRE PRESSURE XX PSI	1/2-inch	Black
3	MAX TOW SPEED 15 MPH	1/2-inch	Black
4	OPEN CONTROL PANEL DOOR BEFORE OPERATING	1/2-inch	Black
5	CAUTION DOOR MUST BE OPEN BEFORE OPERATING AIR CONDITIONER	1/2-inch	Black
6	CAUTION USE CABLE GUIDES AND HOIST RINGS WHEN HOISTING	1/2-inch	Black
7	CAUTION BEFORE TOWING LATCH PINTLE CLOSE TRIPLOCK INSTALL LOCK PIN	1/2-inch or decal PN 3613506	Black
8	DO NOT TOW MORE THAN ONE SIMILAR UNIT FROM THIS PINTLE HOOK	1-inch	Black
9	JP-8 FUEL FILLER INSIDE	1-inch	Black
* - Standard caution/informational marking color will be non-reflective black. Standard safety/warning marking color will be non-reflective red.			

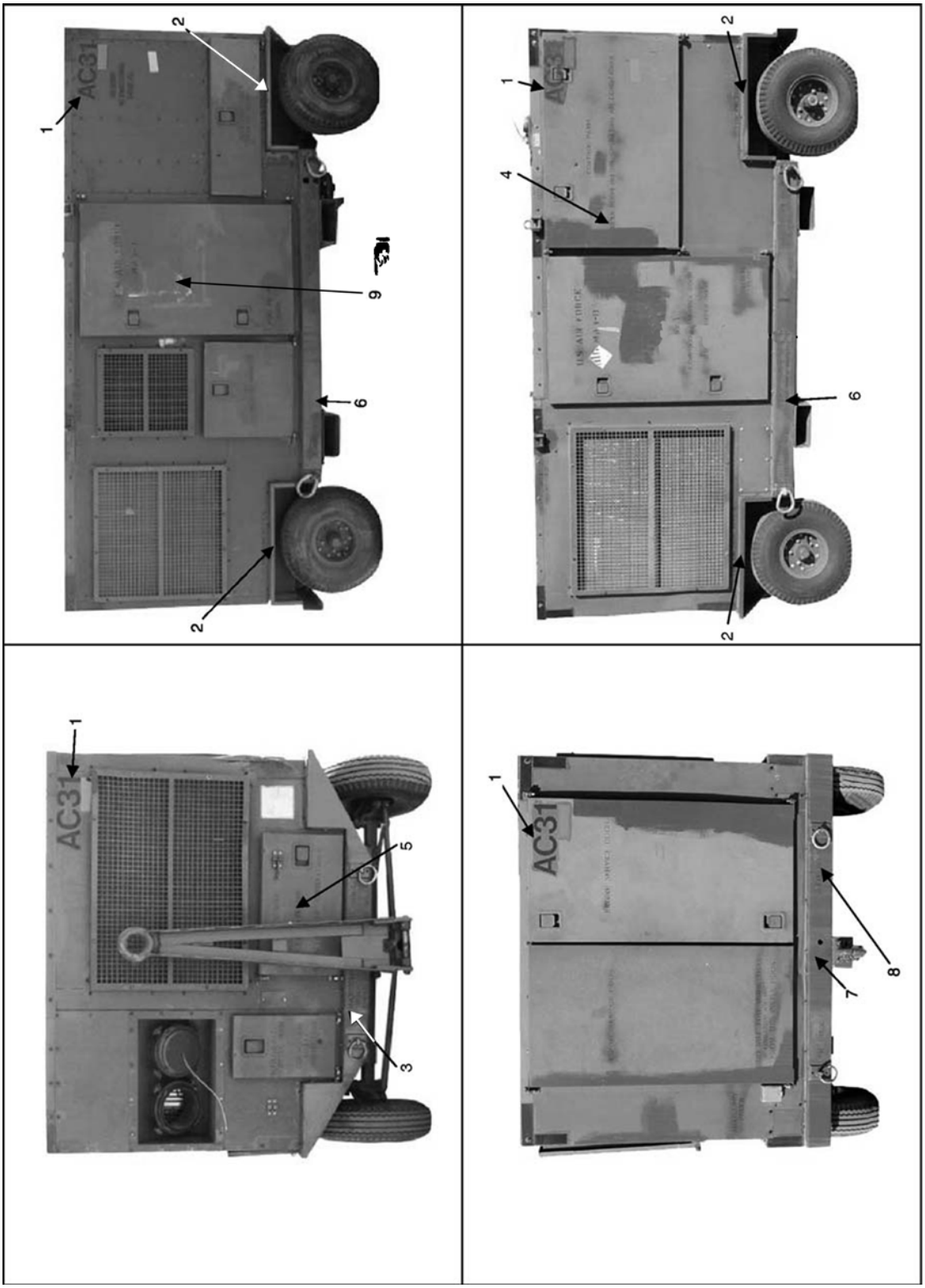

Figure 4-37. MA-3D Air Conditioner

Legend for Figure 4-38.			
Index No.	Markings	Size	Color*
1	FIELD NUMBERS	4-inch	Black
2	TIRE PRESSURE XX PSI	1/2-inch	Black
3	MAX TOW SPEED 15 MPH	1/2-inch	Black
4	HYDROSTATIC TEST C/W DATE AND DUE DATE	1/2-inch	Black
5	DANGER HOT EXHAUST	1-inch	Red
6	CAUTION BEFORE TOWING LATCH PINTLE CLOSE TRIPLOCK INSTALL LOCK PIN	1/2-inch or decal PN 3613506	Black
7	JP-8	1/2-inch	Black
* - Standard caution/informational marking color will be non-reflective black. Standard safety/warning marking color will be non-reflective red.			
NOTE: Figure 4-38 includes views of various models of the MC-2A Air Compressor.			
NOTE: Markings apply to all MC-2A Air Compressor models.			

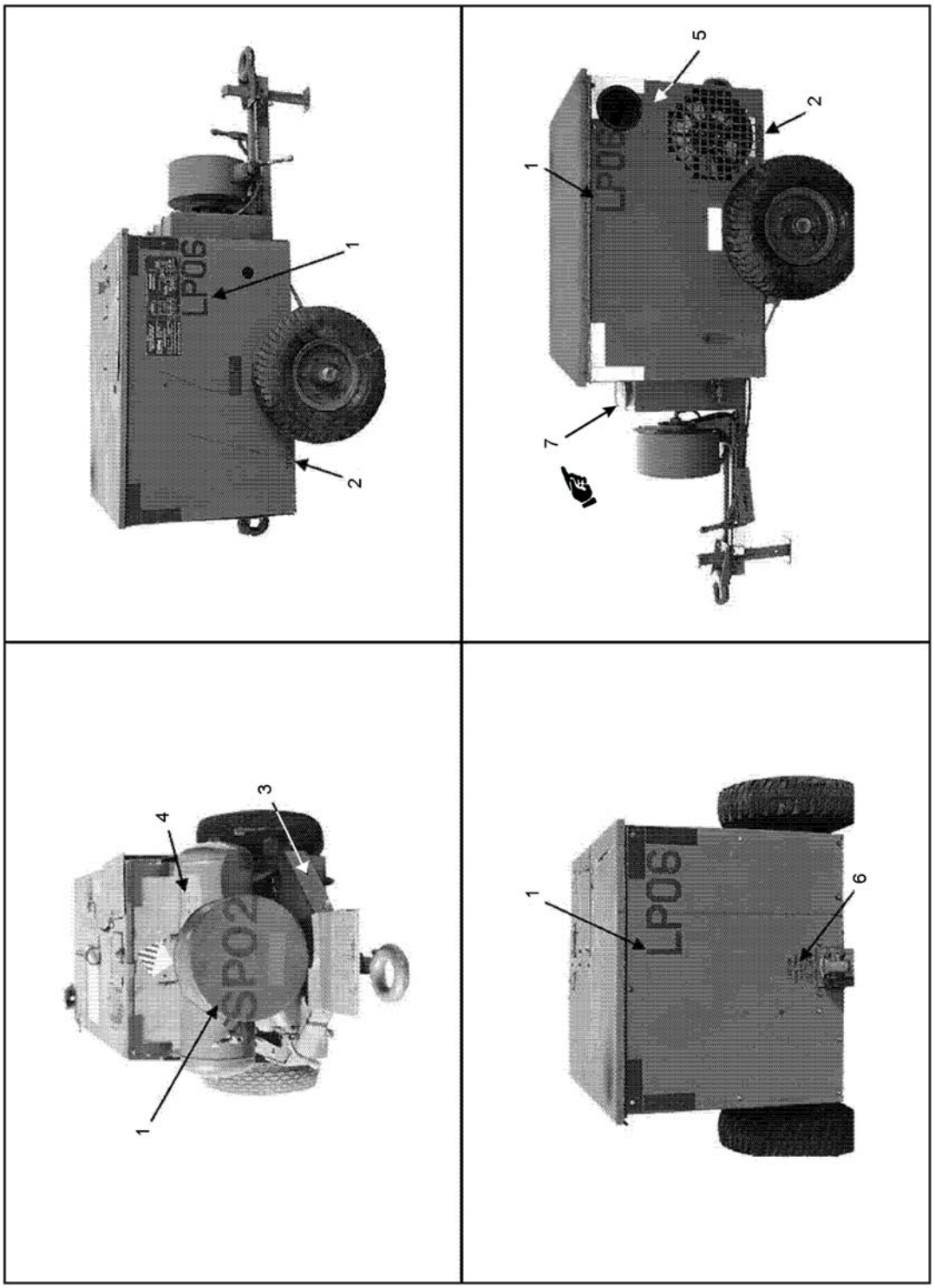

Figure 4-38. MC-2A Air Compressor

Legend for Figure 4-39.			
Index No.	Markings	Size	Color*
1	FIELD NUMBERS	4-inch	Black
2	TIRE PRESSURE XX PSI	1/2-inch	Black
3	MAX TOW SPEED 15 MPH	1/2-inch	Black
4	DOOR MUST BE CLOSED DURING OPERATION	1/2-inch	Black
* - Standard caution/informational marking color will be non-reflective black. Standard safety/warning marking color will be non-reflective red.			

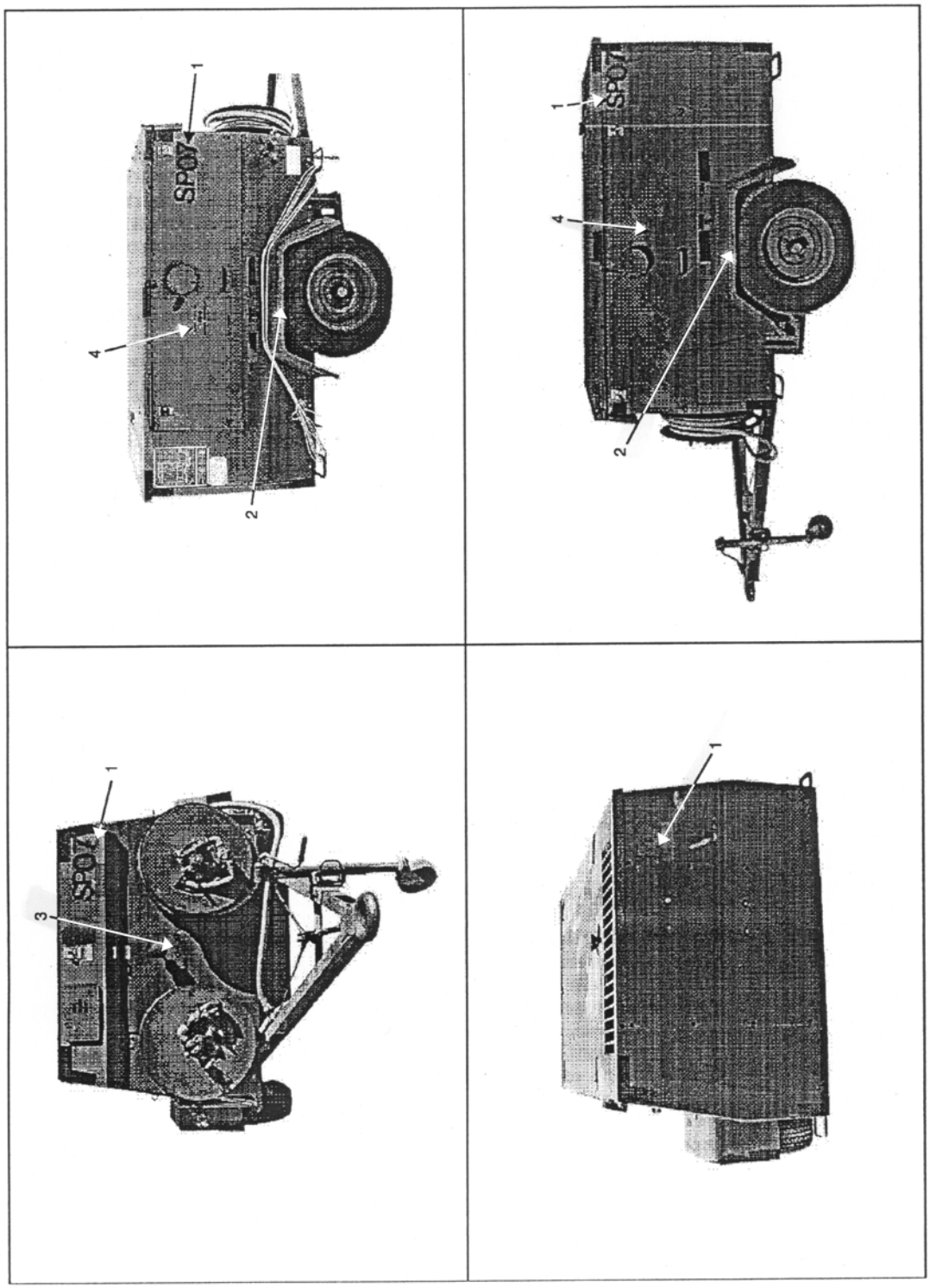

Figure 4-39. MC-7 Air Compressor

Legend for Figure 4-40.			
Index No.	Markings	Size	Color*
1	FIELD NUMBERS	4-inch	Black
2	TIRE INFLATION XX PSI	1/2-inch	Black
3	MAX TOW SPEED 15 MPH CAUTION DO NOT ALLOW THE TOWBAR TO CONTACT TOW VEHICLE	1/2-inch	Black
4	CAUTION RETRACT WHEELS WHEN TOWING	1/2-inch	Black
* - Standard caution/informational marking color will be non-reflective black. Standard safety/warning marking color will be non-reflective red.			

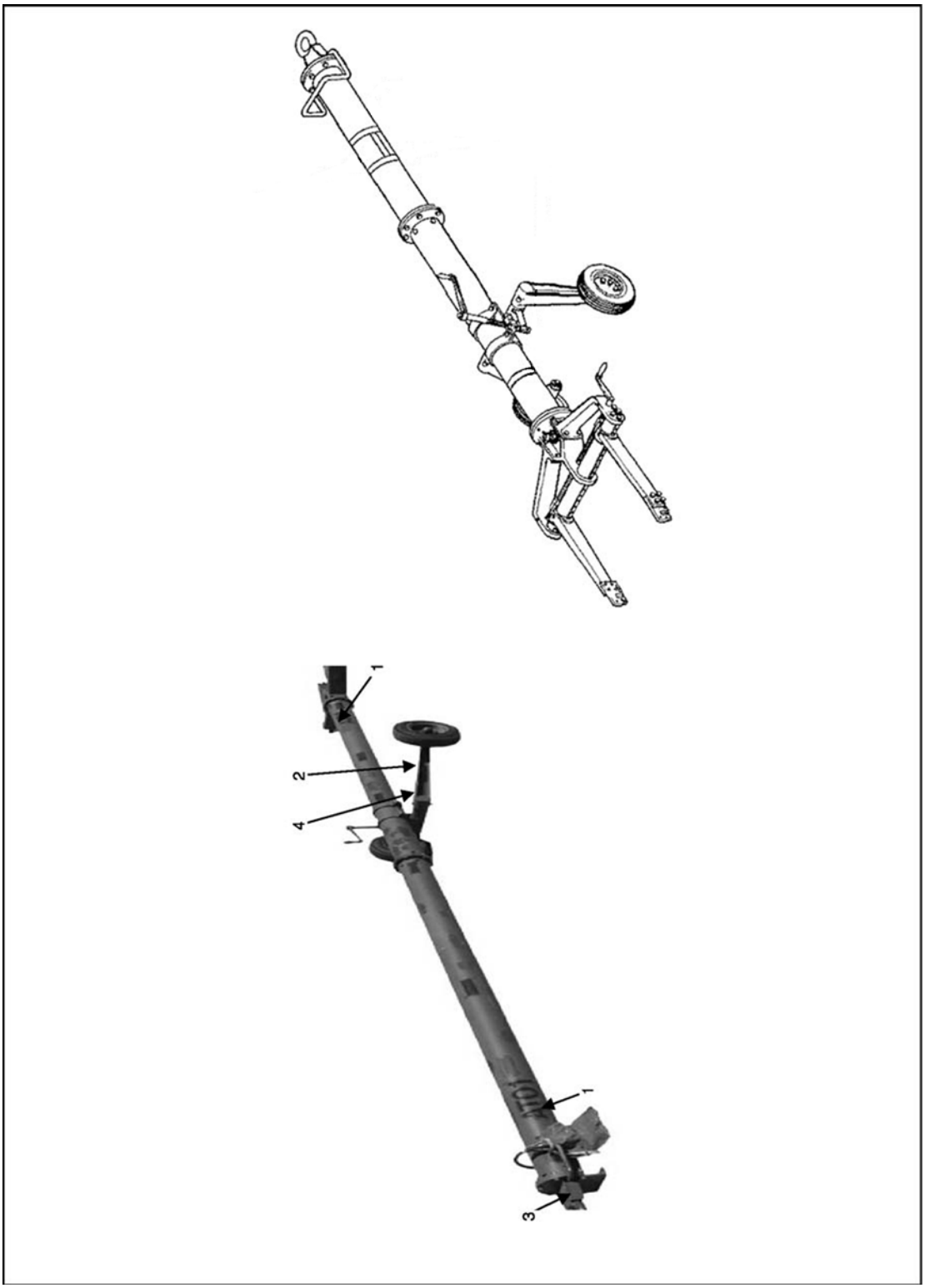

Figure 4-40. MD-1 Towbar

Legend for Figure 4-41.			
Index No.	Markings	Size	Color*
1	FIELD NUMBERS	4-inch	Black
2	TIRE PRESSURE XX PSI	1/2-inch	Black
3	MAX TOW SPEED 15 MPH	1/2-inch	Black
4	CAUTION HEARING PROTECTION REQUIRED	1/2-inch	Black
5	CAUTION HIGH VOLTAGE	1/2-inch	Black
6	CAUTION HIGH VOLTAGE OUTPUT TERMINALS	1/2-inch	Black
7	TIE DOWN LIFT 10,000 LBS	1/2-inch	Black
8	DIESEL FUEL, AS APPLICABLE	1-inch	Black
* - Standard caution/informational marking color will be non-reflective black. Standard safety/warning marking color will be non-reflective red.			
NOTE: Figure 4-41 includes photos of various models of MEP Generators.			
NOTE: Markings apply to all MEP Generators models, as required.			

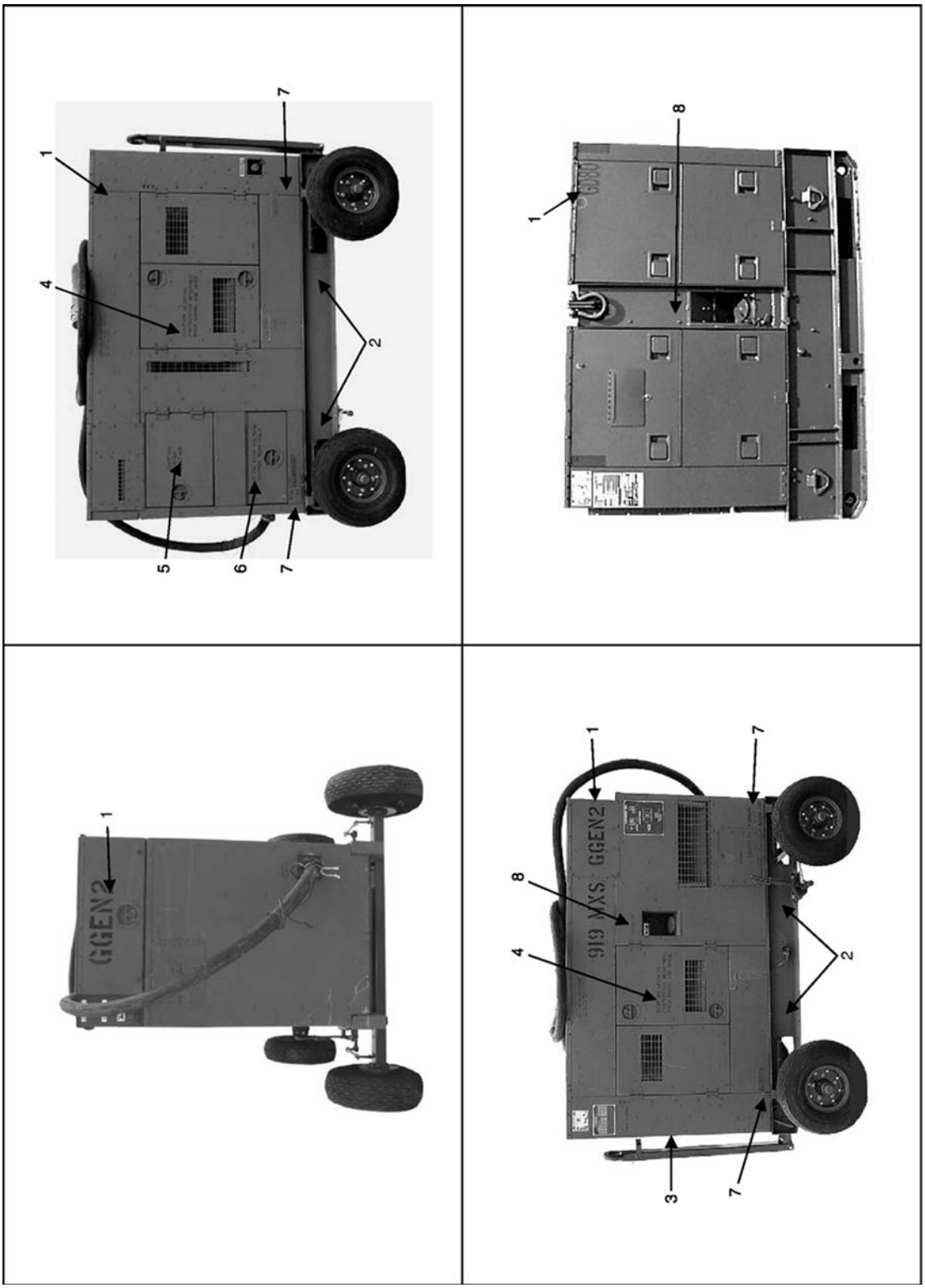

Figure 4-41. MEP Generators

Legend for Figure 4-42.

Index No.	Markings	Size	Color*
1	FIELD NUMBERS	4-inch	Black
2	TIRE PRESSURE XX PSI	1/2-inch	Black
3	7,000 LB WEIGHT CAPACITY	1-inch	Black
4	PARKING BRAKE ON/OFF	1/2-inch	Black
5	DISCONNECT HUBS BEFORE TOWING	1/2-inch	Black
6**	DANGER HOT EXHAUST	1-inch	Red
7	JP-8	1-inch	Black

* - Standard caution/informational marking color will be non-reflective black. Standard safety/warning marking color will be non-reflective red.

** - If unit has been modified for rear engine mounted exhaust, place stencil accordingly on engine cover over exhaust outlet.

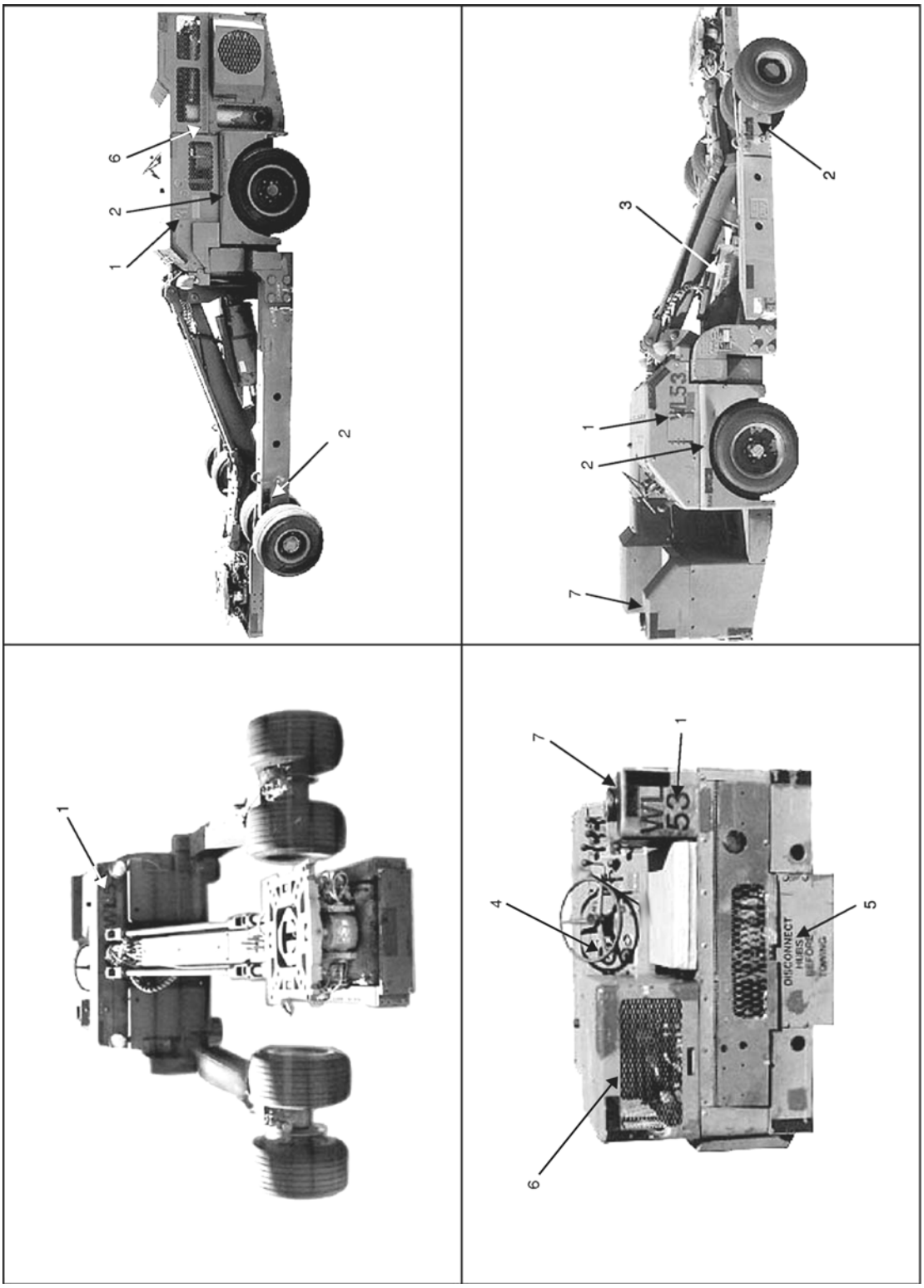

Figure 4-42. MHU-83C/E Bomblift Truck

Legend for Figure 4-43.			
Index No.	Markings	Size	Color*
1	FIELD NUMBERS	4-inch	Black
2	TIRE PRESSURE XX PSI	1/2-inch	Black
3	3,000 LB WEIGHT CAPACITY	1-inch	Black
4	PARKING BRAKE ON/OFF	1/2-inch	Black
5	DRIVE/TOW	1/2-inch	Black
6**	DANGER HOT EXHAUST	1-inch	Red
7	JP-8	1-inch	Black
* - Standard caution/informational marking color will be non-reflective black. Standard safety/warning marking color will be non-reflective red.			
** - If unit has been modified for rear engine mounted exhaust, place stencil accordingly on engine cover over exhaust outlet.			

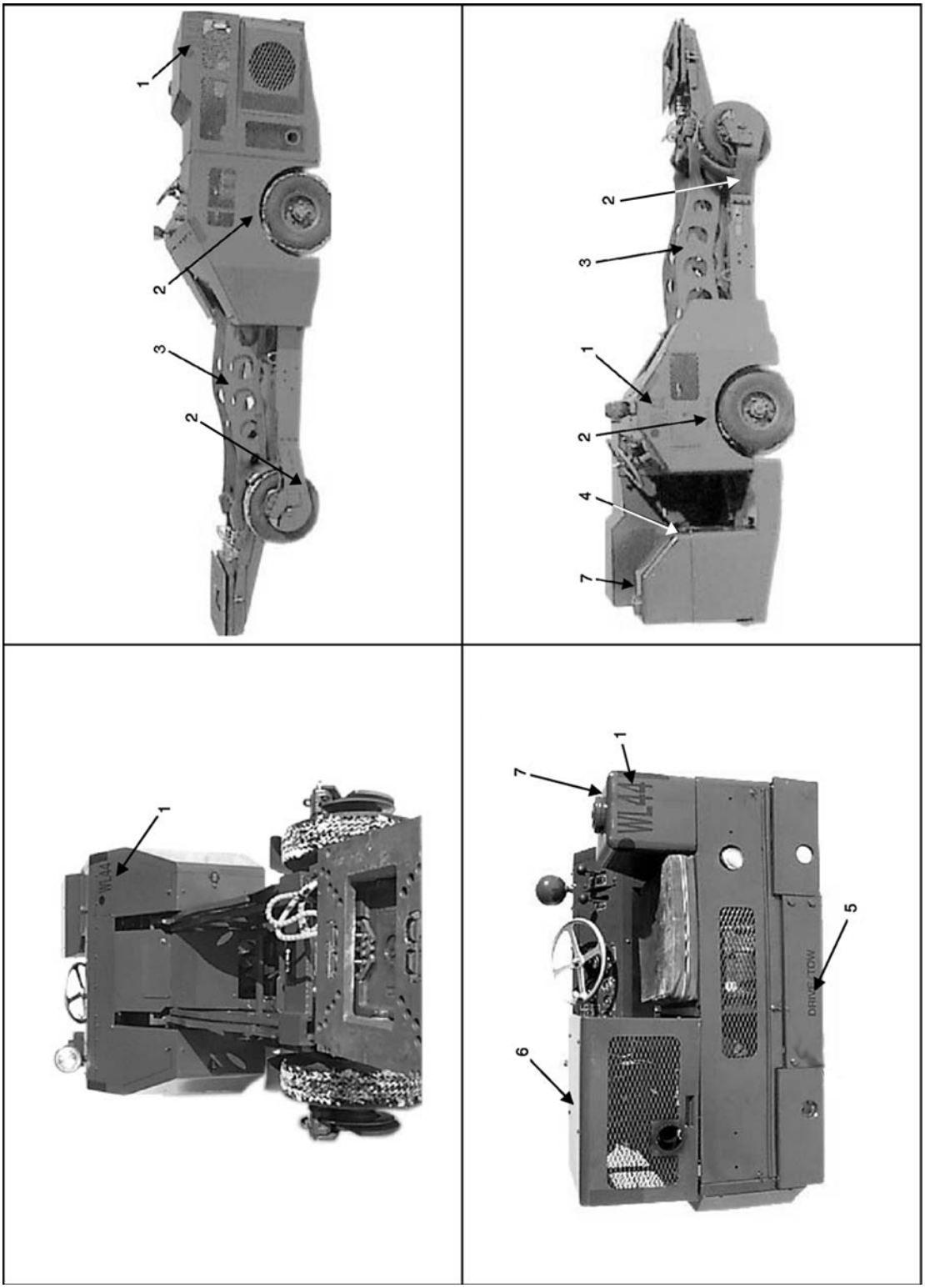

Figure 4-43. MJ-1B Bomblift Truck

Legend for Figure 4-44.			
Index No.	Markings	Size	Color*
1	FIELD NUMBERS	4-inch	Black
2	TIRE PRESSURE XX PSI[1]	1/2-inch	Black
3	MAX TOW SPEED 15 MPH	1/2-inch	Black
4	MIL-PRF-83282 (or applicable HYD. fluid in close proximity of filler cap)	1-inch	Black
5	JP-8 (DIESEL MODELS ONLY)	1-inch	Black
* - Standard caution/informational marking color will be non-reflective black. Standard safety/warning marking color will be non-reflective red.			
[1] - Verify tire pressure for different model test stands in accordance with individual tech orders.			
NOTE: Figure 4-44 includes views of various models of Hydraulic Test Stands.			
NOTE: Markings apply to all Hydraulic Test Stand models.			

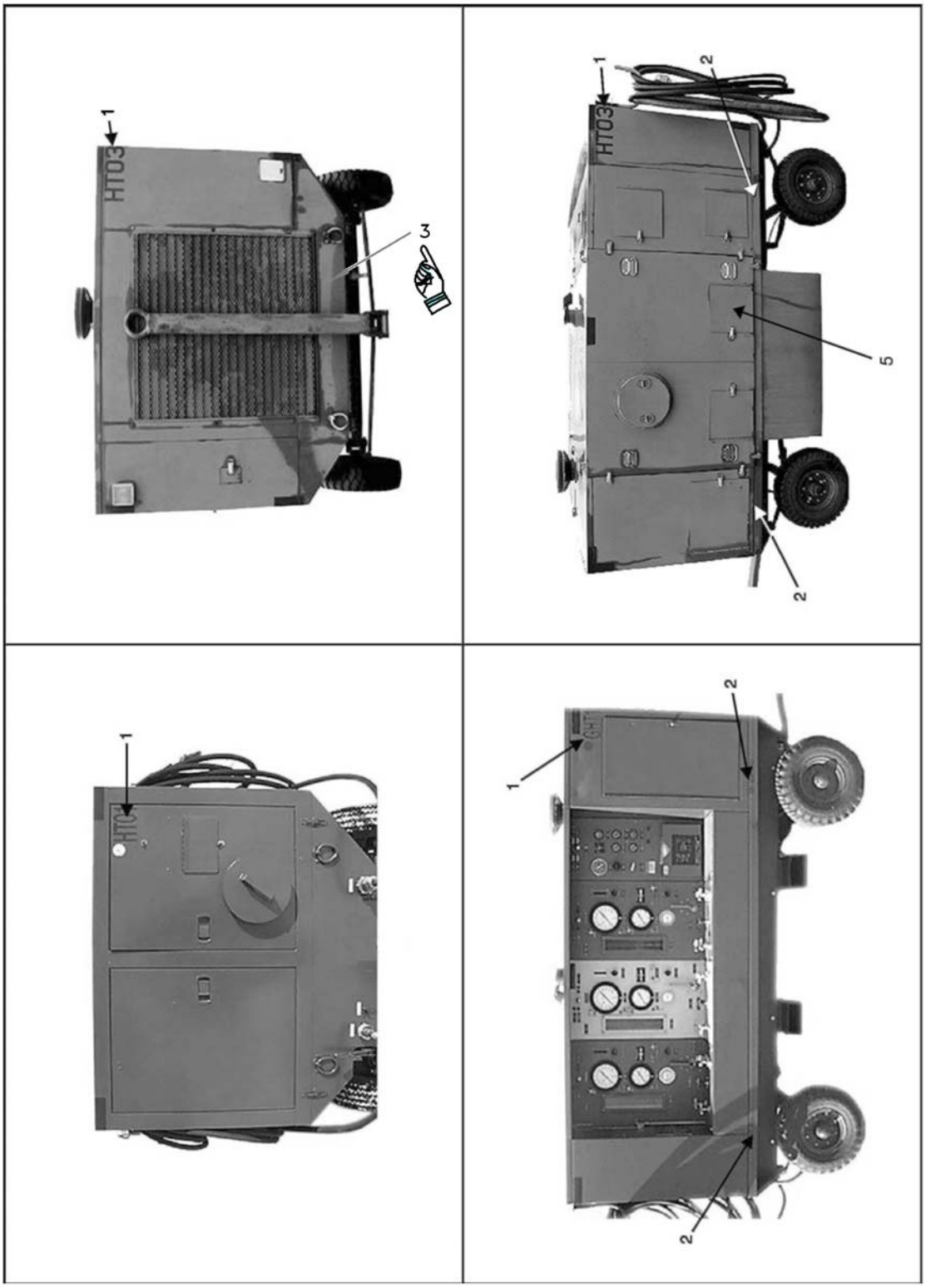

Figure 4-44. Hydraulic Test Stand

Legend for Figure 4-45.			
Index No.	Markings	Size	Color*
1	FIELD NUMBERS	4-inch	Black
2	TIRE PRESSURE XX PSI	1/2-inch	Black
3	MAX TOW SPEED 15 MPH	1/2-inch	Black
4	JP-8	1-inch	Black
5	CAUTION BEFORE TOWING LATCH PINTLE CLOSE TRIPLOCK INSTALL LOCK PIN	1/2-inch or decal PN 3613506	Black
6	WARNING LIGHT FIXTURES MAY BE HOT DO NOT TOUCH	1/2-inch	Red
7	WARNING CONSTANT TENSION MUST BE APPLIED TO WINCH CABLE TO PREVENT TANGLING	1/2-inch	Red
8	FORKLIFT	1/2-inch	Black
9	WARNING ENGAGE MAST SUPPORT LATCH PRIOR TO FORK LIFTING	1/2-inch	Red
10	CAUTION LOWER MAST BEFORE TOWING	1/2-inch	Black
* - Standard caution/informational marking color will be non-reflective black. Standard safety/warning marking color will be non-reflective red.			

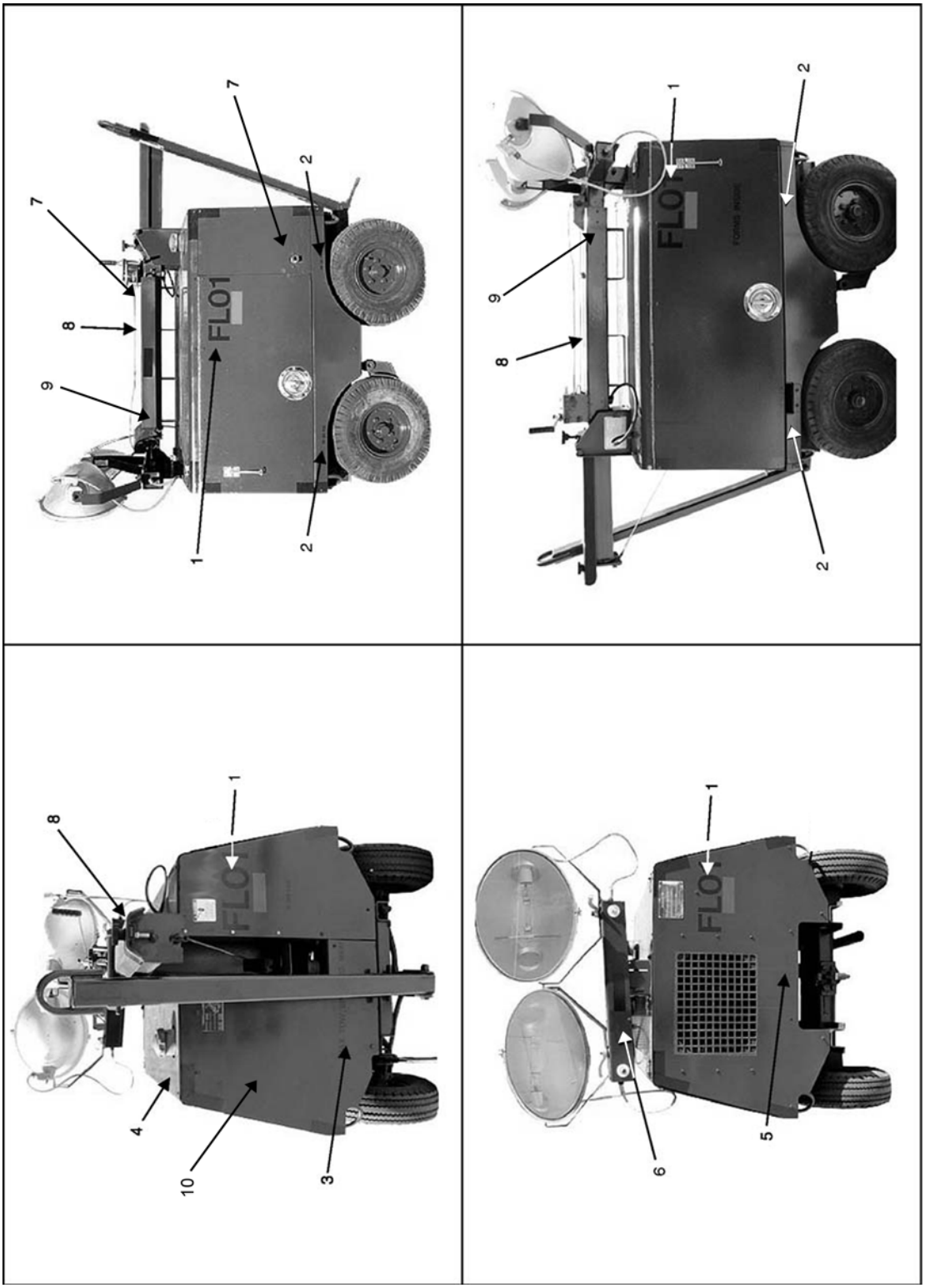

Figure 4-45. Light Cart, FL-1D

Legend for Figure 4-46.			
Index No.	Markings	Size	Color*
1	FIELD NUMBERS	4-inch	Black
2	TIRE PRESSURE XX PSI	1/2-inch	Black
3	MAX TOW SPEED 15 MPH	1/2-inch	Black
4	WARNING DO NOT USE AS A SHELTER POSSIBLE CARBON MONOXIDE POISONING MAY OCCUR	1-inch	Red
5	CAUTION LOWER TABLE BEFORE TOWING	1/2-inch	Black
6	JP-8	1-inch	Black
7	DOOR MUST BE OPEN DURING OPERATION	1/2-inch	Black
8	CAUTION BEFORE TOWING LATCH PINTLE CLOSE TRIPLOCK INSTALL LOCK PIN	1/2-inch or decal PN 3613506	Black
9	CAUTION NON-GFCI PROTECTED OUTLET DO NOT USE FOR HAND TOOLS	1/2-inch	Black
10	WARNING DO NOT FORK LIFT HERE	1-inch	Red
* - Standard caution/informational marking color will be non-reflective black. Standard safety/warning marking color will be non-reflective red.			

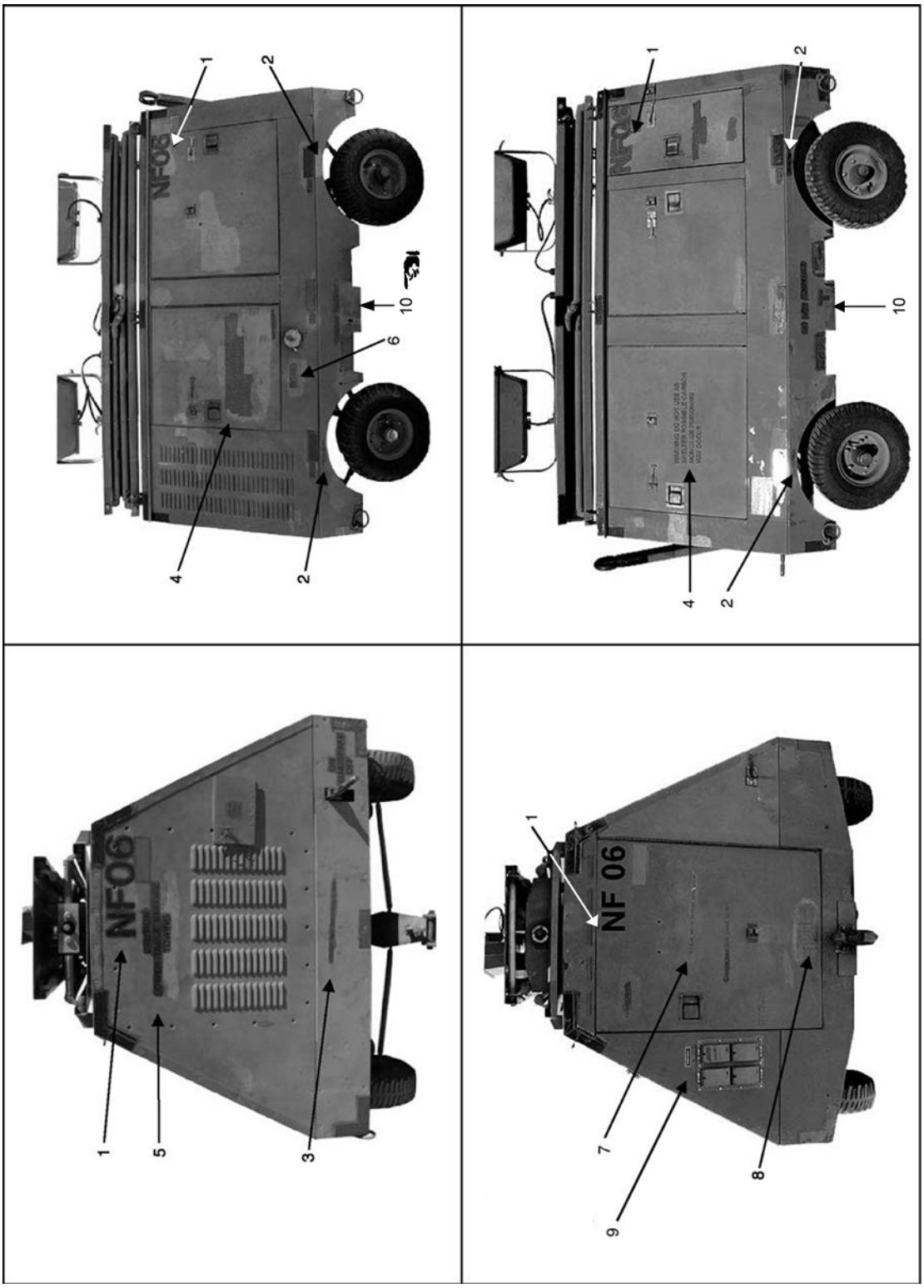

Figure 4-46. NF-2D Light Cart, Diesel

Legend for Figure 4-47.			
Index No.	Markings	Size	Color*
1	FIELD NUMBERS	4 -inch	Black
2	MAX TOW SPEED 5 MPH	1/2-inch	Black
3	MIL-PRF-7808 (or applicable oil)	1/2-inch	Black
* - Standard caution/informational marking color will be non-reflective black. Standard safety/warning marking color will be non-reflective red.			
NOTE: Figure 4-47 includes views of various models of the Oil Cart.			
NOTE: Markings apply to all Oil Cart models.			

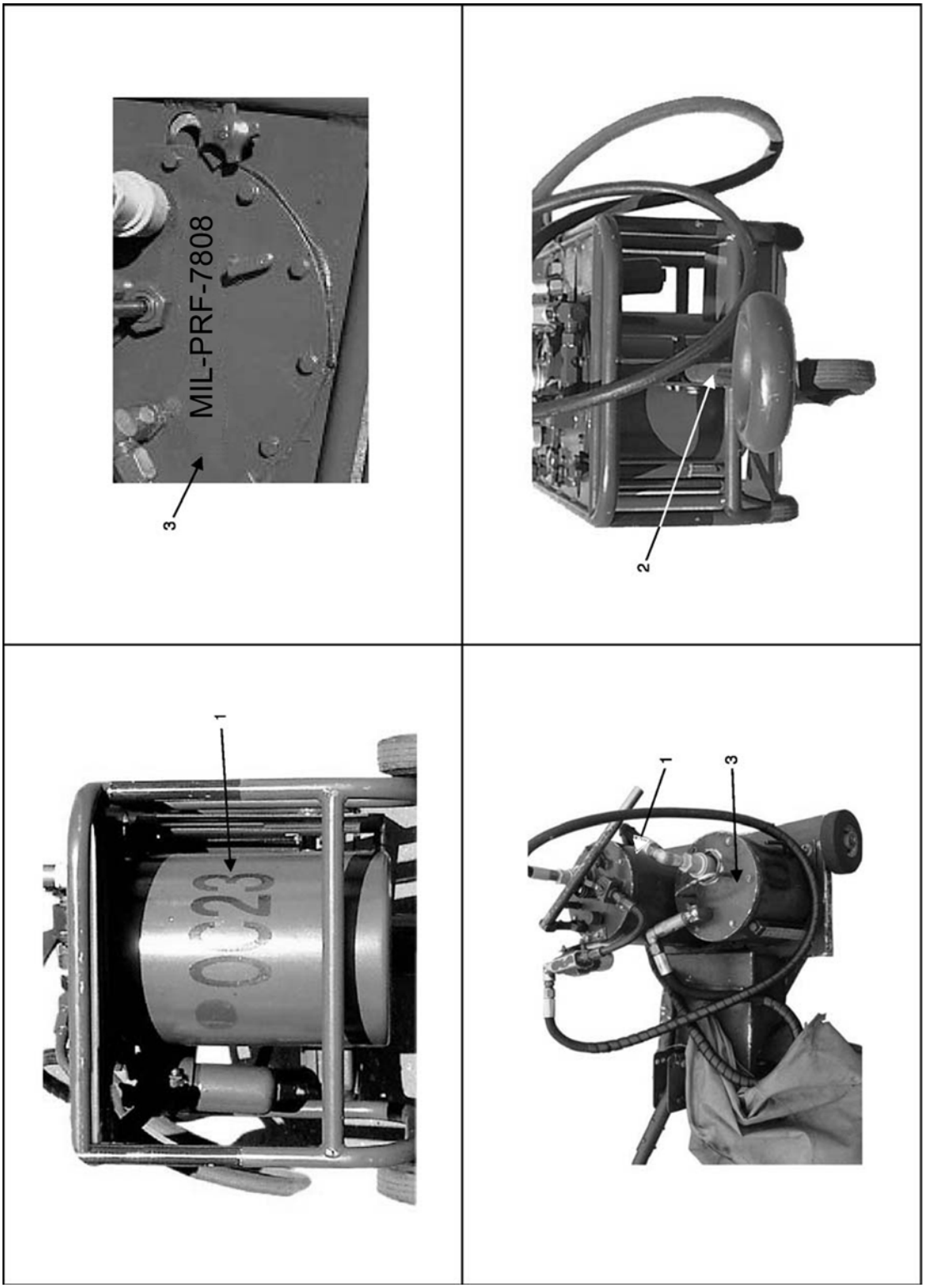

Figure 4-47. Oil Cart

Legend for Figure 4-48.			
Index No.	Markings	Size	Color*
1	FIELD NUMBERS	4-inch	Black
2	TIRE PRESSURE XX PSI	1/2-inch	Black
3	MAX TOW SPEED 15 MPH	1/2-inch	Black
4	CAUTION BEFORE TOWING LATCH PINTLE CLOSE TRIPLOCK INSTALL LOCK PIN	1/2-inch or decal PN 3613506	Black
* - Standard caution/informational marking color will be non-reflective black. Standard safety/warning marking color will be non-reflective red.			

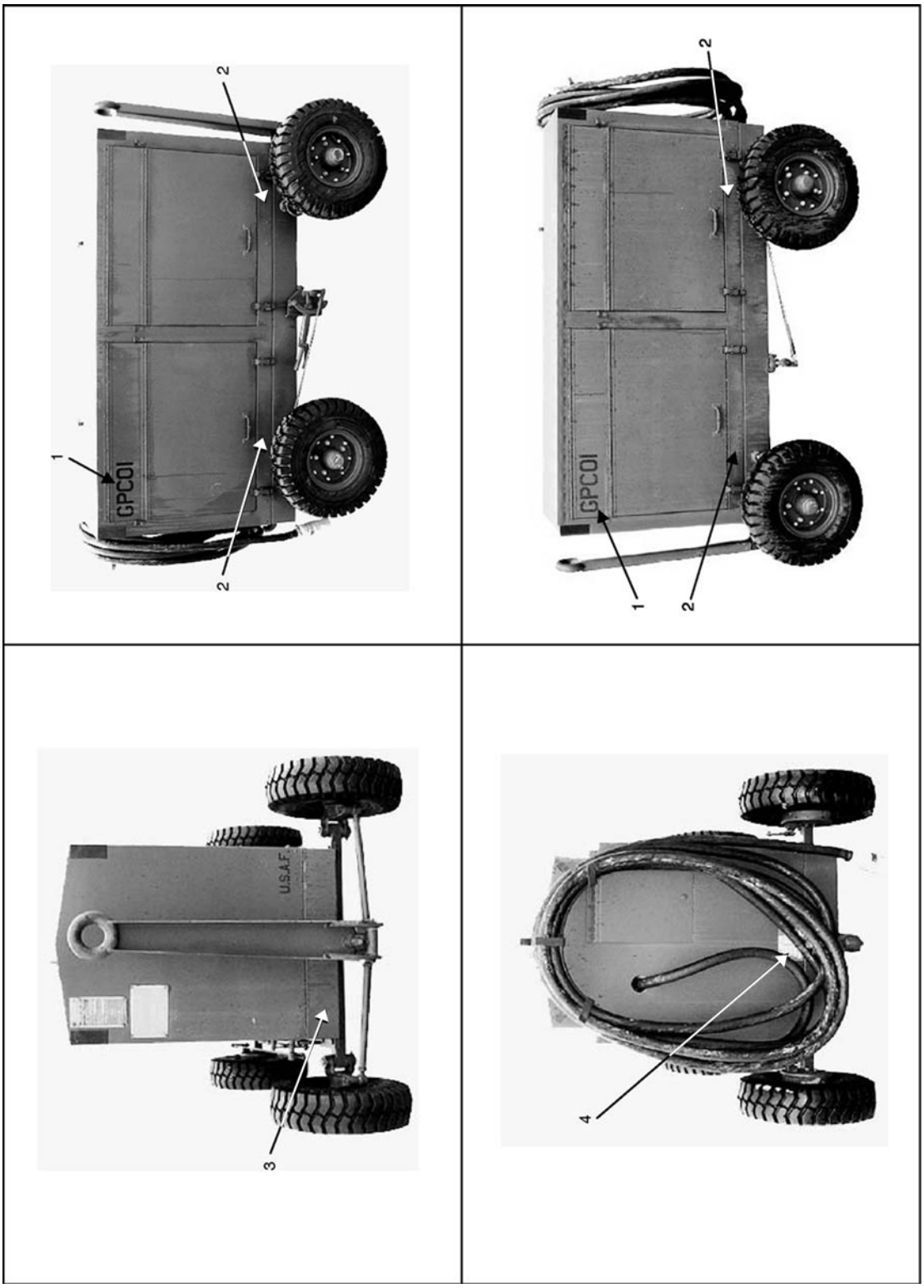

Figure 4-48. Purging Unit GSU-62M LOX Storage

Legend for Figure 4-49.			
Index No.	Markings	Size	Color*
1	FIELD NUMBERS	4-inch	Black
2	TIRE PRESSURE XX PSI	1/2-inch	Black
3	MAX TOW SPEED 5 MPH	1/2-inch	Black
* - Standard caution/informational marking color will be non-reflective black. Standard safety/warning marking color will be non-reflective red.			

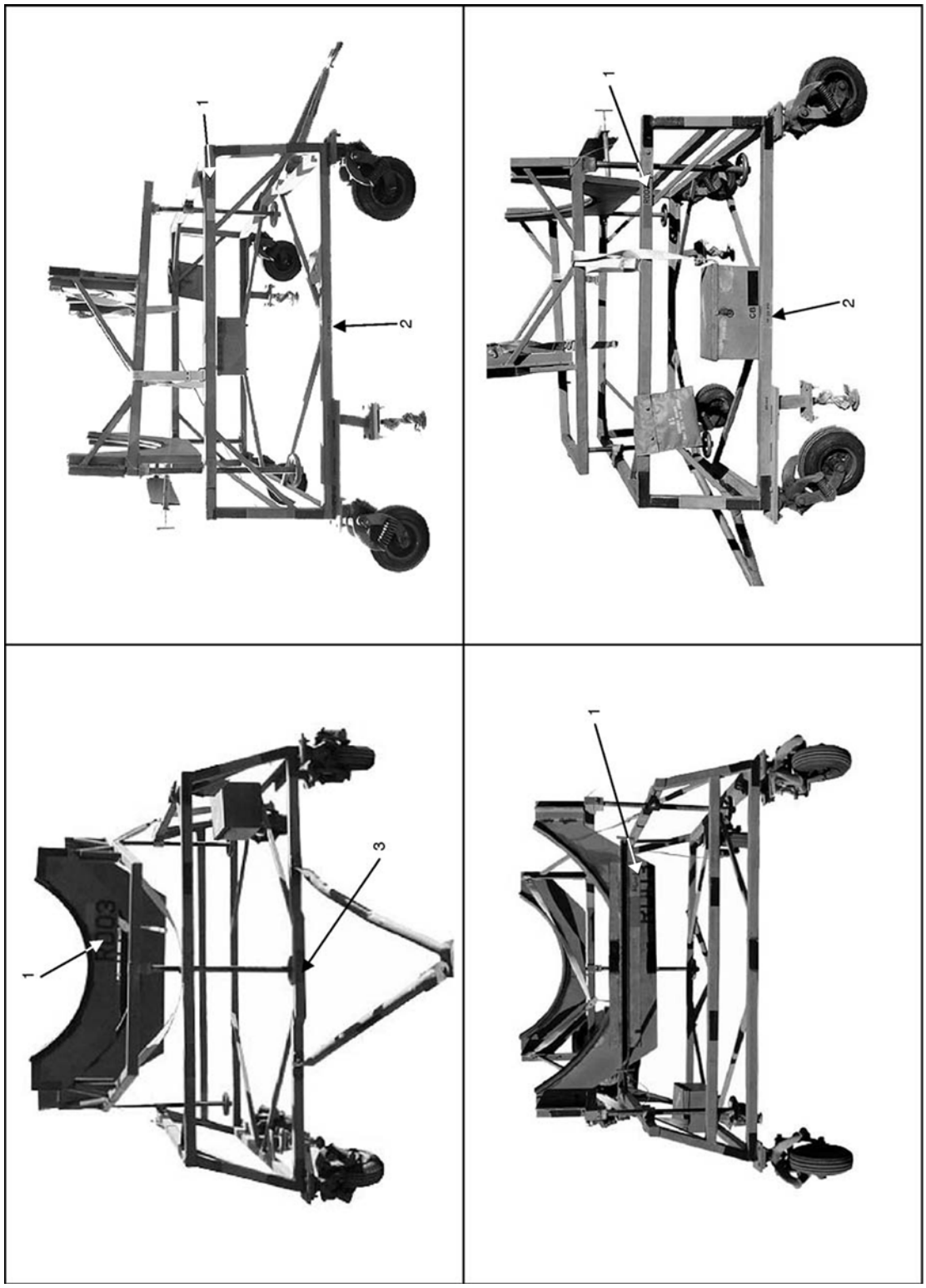

Figure 4-49. Radome Dolly

Legend for Figure 4-50.			
Index No.	Markings	Size	Color*
1	FIELD NUMBERS	4-inch	Black
2	TIRE PRESSURE XX PSI	1/2-inch	Black
3	MAX TOW SPEED 15 MPH	1/2-inch	Black
4	WARNING HIGH PRESSURE HOSE 400 - 4000 PSIG	1-inch	Red
5	HIGH PRESSURE HOSE 400 - 4000 PSIG	1/2-inch	Black
6	LOW PRESSURE HOSE 0 - 400 PSIG	1-inch	Black
7	LOW PRESSURE HOSE 0 - 400 PSIG	1/2-inch	Black
8	JP-8	1-inch	Black
9	HYDRAULIC FLUID ONLY	1/2-inch	Black
10	CONDENSATE DRAIN	1/2-inch	Black
11	CAUTION BEFORE TOWING LATCH PINTLE CLOSE TRIPLOCK INSTALL LOCK PIN	1/2-inch or decal PN 3613506	Black
* - Standard caution/informational marking color will be non-reflective black. Standard safety/warning marking color will be non-reflective red.			

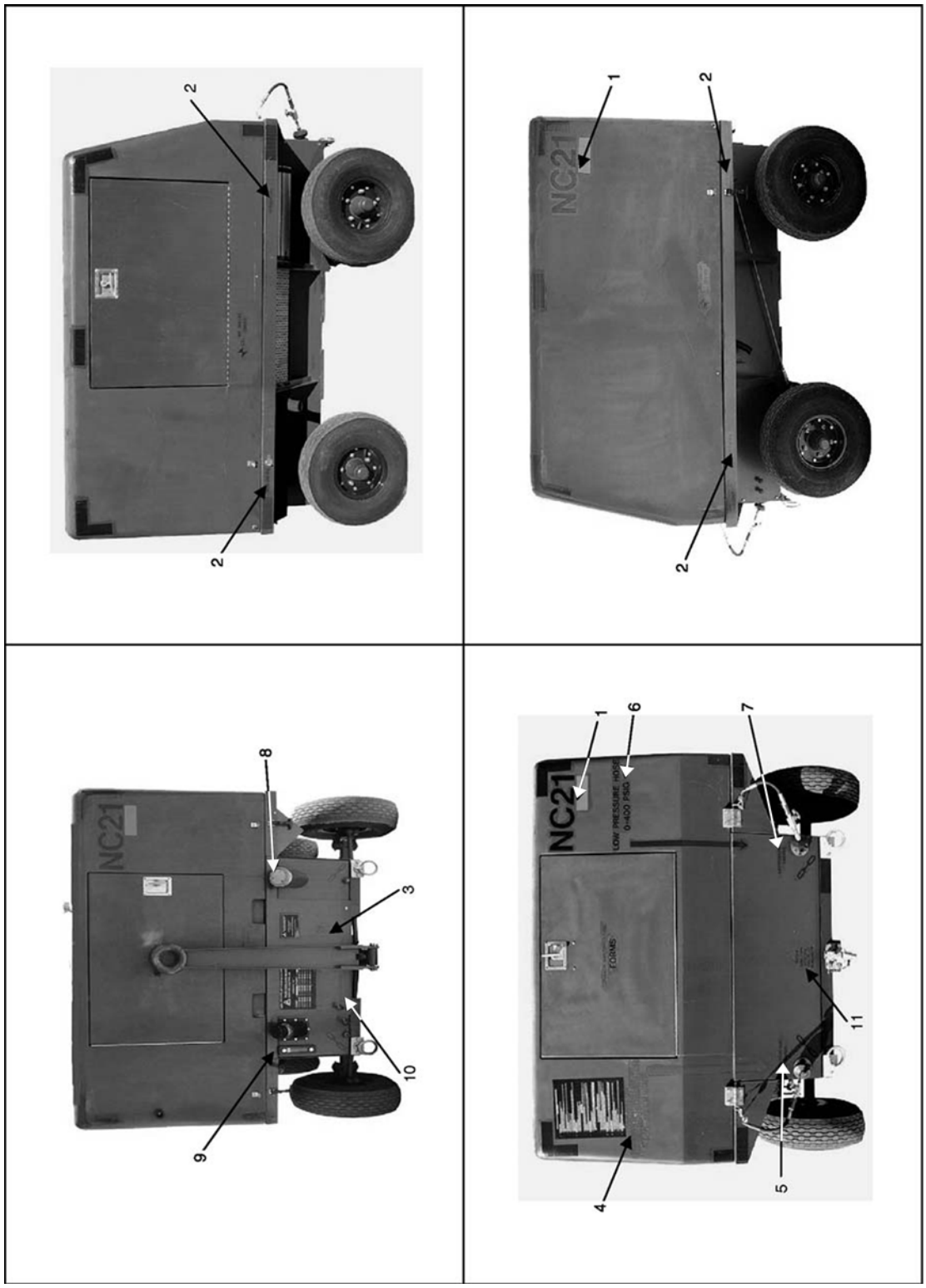

Figure 4-50. Self-Generating Nitrogen Cart

Legend for Figure 4-51.			
Index No.	Markings	Size	Color*
1	FIELD NUMBERS	4-inch	Black
2	TIRE PRESSURE XX PSI	1/2-inch	Black
3	MAX TOW SPEED 15 MPH	1/2-inch	Black
4	CAUTION BEFORE TOWING LATCH PINTLE CLOSE TRIPLOCK INSTALL LOCK PIN	1/2-inch or decal PN 3613506	Black
* - Standard caution/informational marking color will be non-reflective black. Standard safety/warning marking color will be non-reflective red.			

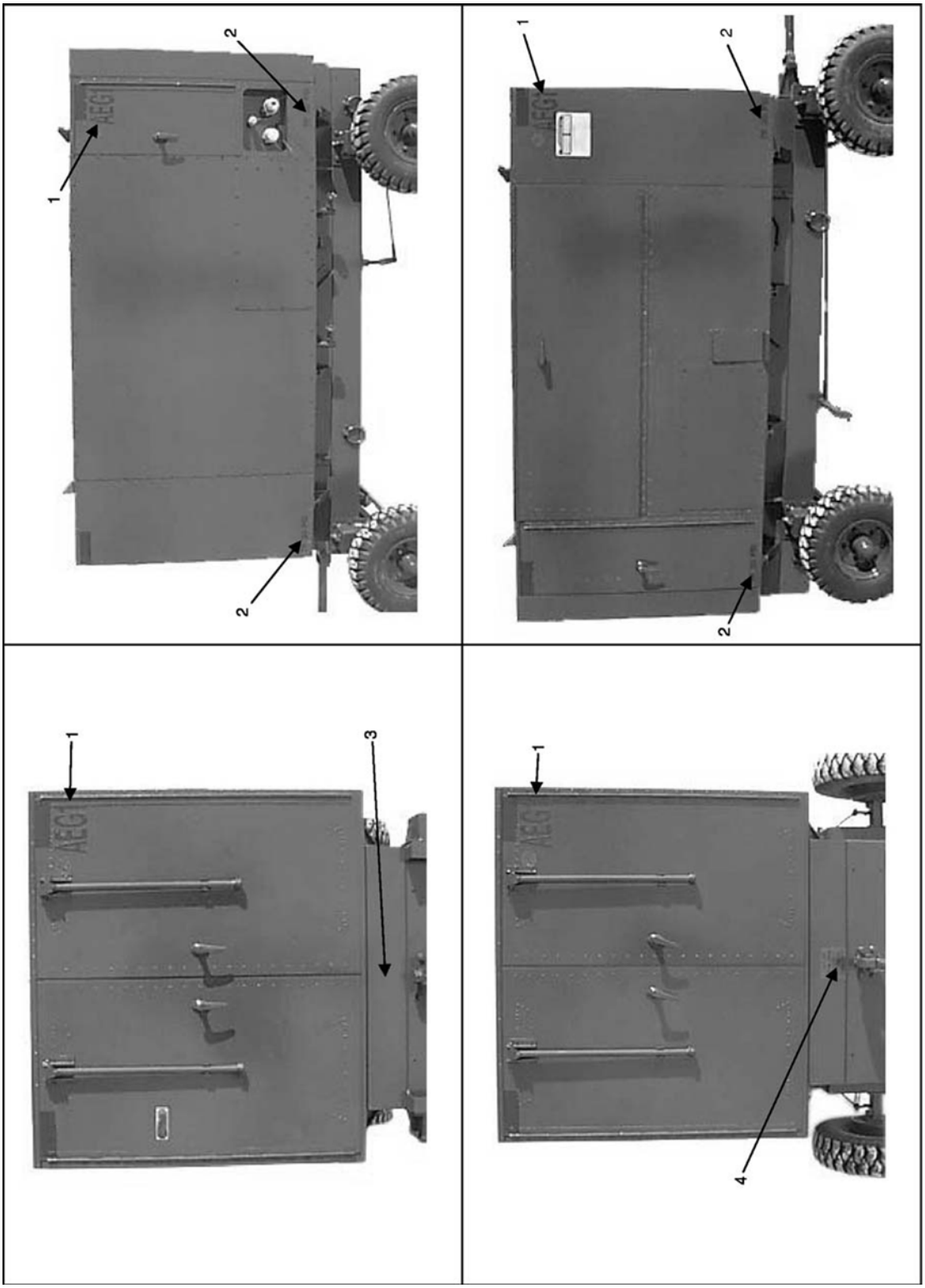

Figure 4-51. Service Cart

Legend for Figure 4-52.			
Index No.	Markings	Size	Color*
1	FIELD NUMBERS	4-inch	Black
2	TIRE PRESSURE XX PSI	1/2-inch	Black
3	MAX TOW SPEED 15 MPH	1/2-inch	Black
* - Standard caution/informational marking color will be non-reflective black. Standard safety/warning marking color will be non-reflective red.			

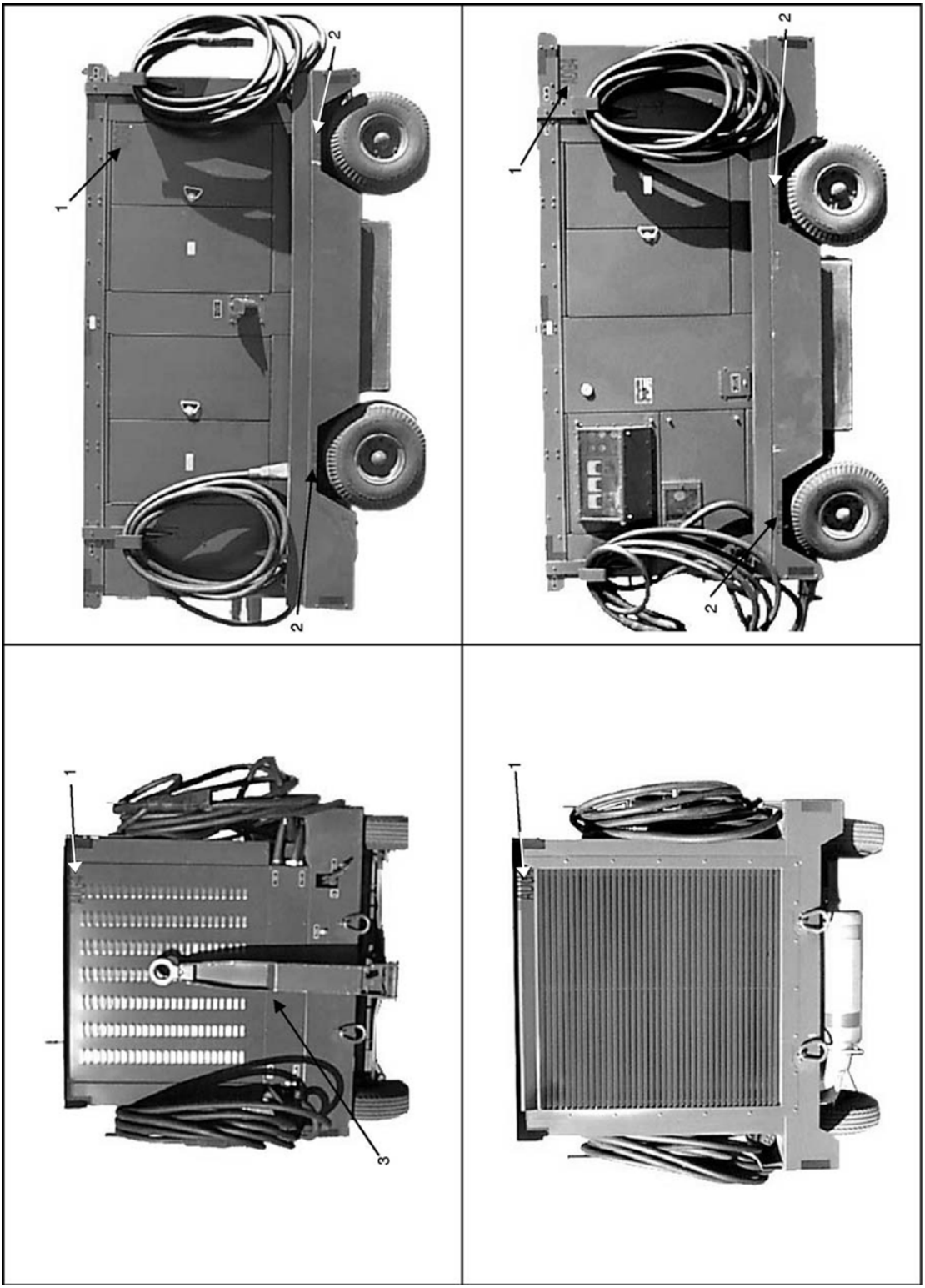

Figure 4-52. Trielectron Generator

Legend for Figure 4-53.			
Index No.	Markings	Size	Color*
1	FIELD NUMBERS	4 -inch	Black
2	TIRE PRESSURE XX PSI	1/2-inch	Black
3	MAXIMUM DISTRIBUTED PLATFORM LOAD 2000 LBS	1/2-inch	Black
4	MAXIMUM LOAD PER ROLLING PANEL 250 LBS NOT TO EXCEED 1250 LBS OVERALL	1/2-inch	Black
5	WARNING THIS PLATFORM NOT ELECTRICALLY INSULATED	1/2-inch	Red
6	MAX TOWING SPEED 15 MPH	1/2-inch	Black
7	CAUTION ALWAYS BLOCK FRAME BEFORE TYING DOWN BLOCKING POINT TIE DOWN POINT ↓ ↓	1/2-inch	Black
8	TOWING INSTRUCTIONS: 1. CHECK BRAKE ACCUMULATOR PRESSURE 2. CHOCK WHEELS AND TURN EMERGENCY BRAKE VALVE ON 3. INSTALL TONGUE AND DISENGAGE DRIVE LINE 4. TURN EMERGENCY BRAKE VALVE OFF AND REMOVE CHOCKS 5. RELEASE HAND BRAKE 6. TOW, 15 MPH MAXIMUM 7. REVERSE STEPS WHEN TOWING IS COMPLETE	1/2-inch	Black
9	CAUTION (BLACK) ALWAYS USE SPREADER BAR WHEN LIFTING (BLACK)	1/2-inch	Black
10	DANGER LOWER PLATFORM COMPLETELY WHEN SERVICING MACHINE. NEVER ELEVATE PLATFORM UNLESS MACHINE IS ON FIRM LEVEL GROUND.	1/2-inch	Red
11	WARNING CHECK HYDRAULIC EMERGENCY BRAKE VALVE FOR OFF POSITION PRIOR TO OPERATION	1/2-inch	Red
12	HYDRAULIC FLUID LEVEL MUST BE WITHIN SIGHT LEVEL GAGE WHEN PLATFORM IS FULLY LOWERED MIL-H-XXXX (AS APPLICABLE)	1-inch	Black
13	WARNING VALVE MUST REMAIN OPEN TO OPERATE UNIT (STENCIL REQUIRED ONLY IF RESERVOIR HAS A SHUT OFF VALVE)	1/2-inch	Black

Legend for Figure 4-53 - continued.			
Index No.	Markings	Size	Color*
14	OPERATING INSTRUCTIONS: MANUAL LOWERED RETRACT, EMERGENCY PLATFORM RETRACT: 1. MOVE RETRACT SWITCH TO RETRACT 2. RELEASE SWITCH WHEN PLATFORM IS FULL RETRACTED MANUAL PLATFORM LOWER: 1. CHECK LOWER ACCUMULATOR PRESSURE 2. MOVE MANUAL LOWER LEVER TO LOWER 3. RETURN LEVER TO OFF WHEN LOWERING IS COMPLETE	1/2-inch	Black
15	DANGER GUARDRAILS MUST BE RAISED TO 42″ HEIGHT FOR NORMAL OPERATION	1/2-inch	Red
16	EMERGENCY LOWERING TO LOWER 1. OPEN VALVE (1) BY PUSHING KNURLED KNOB IN AND TURNING COUNTERCLOCKWISE TO POSITION SHOWN 2. OPEN VALVE (2) BY TURNING KNOB COUNTERCLOCKWISE NOTE: VALVES MUST BE CLOSED BEFORE RAISING PLATFORM DECAL 10730-00-02 EMERGENCY LOWERING CONTROLS INSIDE DECAL 10700-00-02	1/2-inch	Black
17	MAX LOAD 500 LBS	1/2-inch	Black
18	MAX LOAD 250 LBS	1/2-inch	Black
19	FUEL JP-8	1-inch 1/2-inch	Black Black
20	CAUTION DO NOT EXCEED TURNING RADIUS	1/2-inch	Black
21	DRIVELINE DISCONNECT	1/2-inch	Black
22	C | G GVW 14,660 LBS.	1/2-inch	Black
23	LIFT POINT	1/2-inch	Black
24	CAUTION SET SPEED SWITCH TO LOW SPEED POSITION WITHIN 15 FEET OF AIRCRAFT	1-inch	Black
25	CAUTION DO NOT EXTEND OR RETRACT PLATFORM WITH THE STAND IN THE FULLY LOWERED POSITION. RAISE STAND TO AT LEAST 2 1/2 FEET BEFORE EXTENDING OR RETRACTING THE PLATFORM.	1/2-inch	Black

Legend for Figure 4-53 - continued.			
Index No.	Markings	Size	Color*
26	DANGER DECAL MOUNTED ON BOTH SIDES OF GATE PN 40450-000-02 1. LANYARD ATTACHMENT POINT ABOVE THE D-RINGS. 2. MANUAL LOWERING VALVE AND EMERGENCY RETRACT SWITCH INSIDE ON ACCESS DOOR. 3. “DAVIT MOUNT INSIDE” BOTH ACCESS DOORS.	 1/2-inch 1-inch 1-inch	 Black Black Black
27	HI/LOW SPEED	1/2-inch	Black
* - Standard caution/informational marking color will be non-reflective black. Standard safety/warning marking color will be non-reflective red.			
NOTE: Verify correct stencils and placement in accordance with individual technical orders.			
NOTE: Reference individual technical orders for decal package information.			

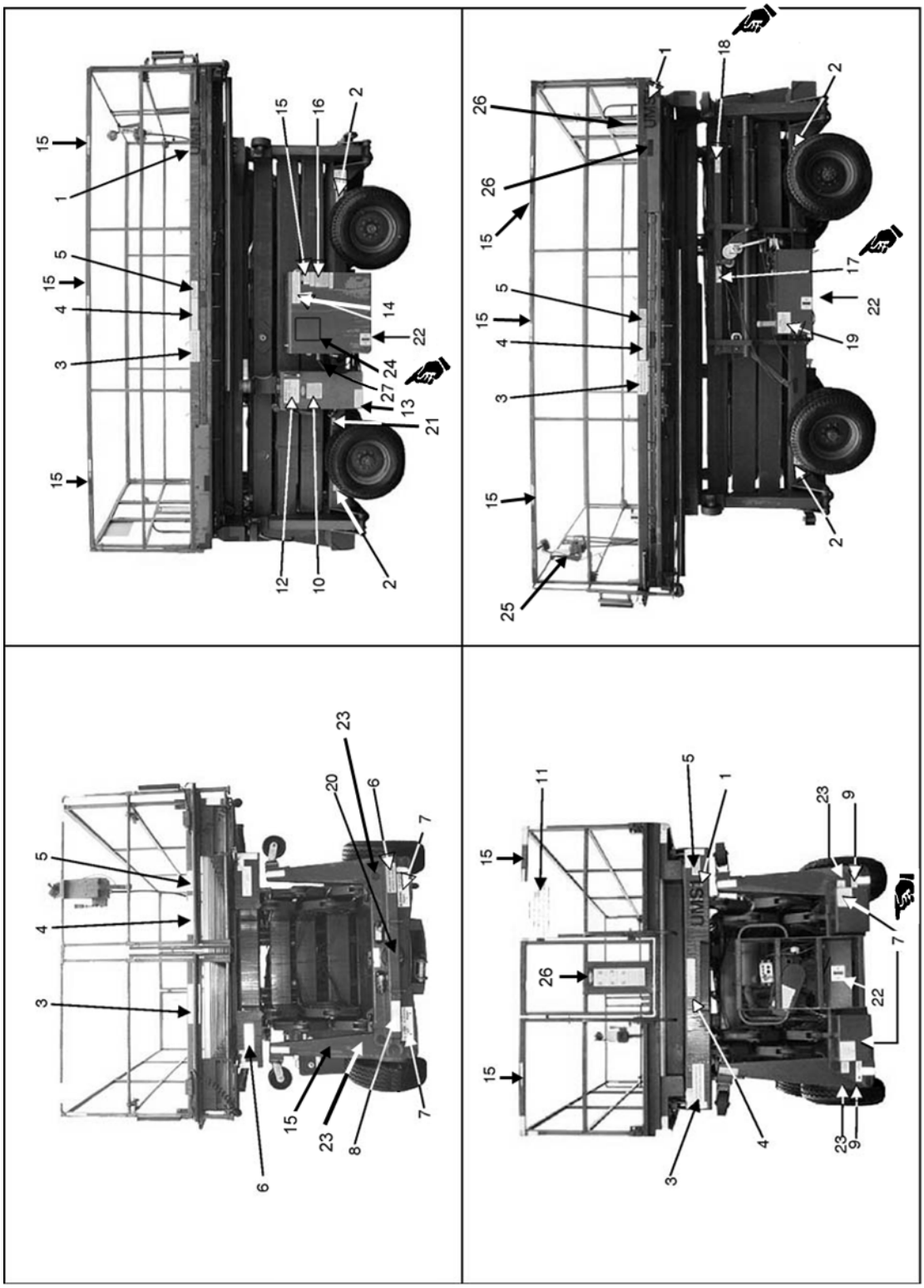

Figure 4-53. Universal Maintenance Stand

Legend for Figure 4-54.			
Index No.	Markings	Size	Color*
1	FIELD MARKINGS	3-inch	Black
2	TIRE PRESSURE XX PSI	1-inch	Black
3	MAX TOW SPEED 15 MPH	1-inch	Black
4	DANGER HOT EXHAUST	1-inch	Red
5	DO NOT FORKLIFT FROM REAR	1-inch	Black
6	CAUTION BEFORE TOWING LATCH PINTLE, CLOSE TRIPLOCK AND INSTALL LOCKPIN	1/2-inch	Black
7	DANGER UNIT UNSAFE IN FUEL VAPOR AREA	1-inch 1/2-inch	Red
8	CONTROL PANEL	1-inch	Black
9	FUEL DRAIN	1-inch	Black
10	FORMS INSIDE	1-inch	Black
11	JP-8	1-inch	Black
12	STORE WHEEL IN TOW POSITION PRIOR TO TOWING	1-inch	Black
13	FAW 100	1/2-inch	Black
14	RAW 900	1/2-inch	Black
15	CB	2-inch	Black
16	GW 1000	1/2-inch	Black
17	DUCT STORAGE	1/2-inch	Black
18	MOBILITY PLACARD	1-inch	Black
19	INSTALL EXHAUST DUCTS BEFORE STARTING	1/2-inch	Black
20	REMOVE EXHAUST DUCTS AFTER SHUTDOWN	1/2-inch	Black
* - Standard caution/informational marking color will be non-reflective black. Standard safety/warning non-reflective marking color will be red.			

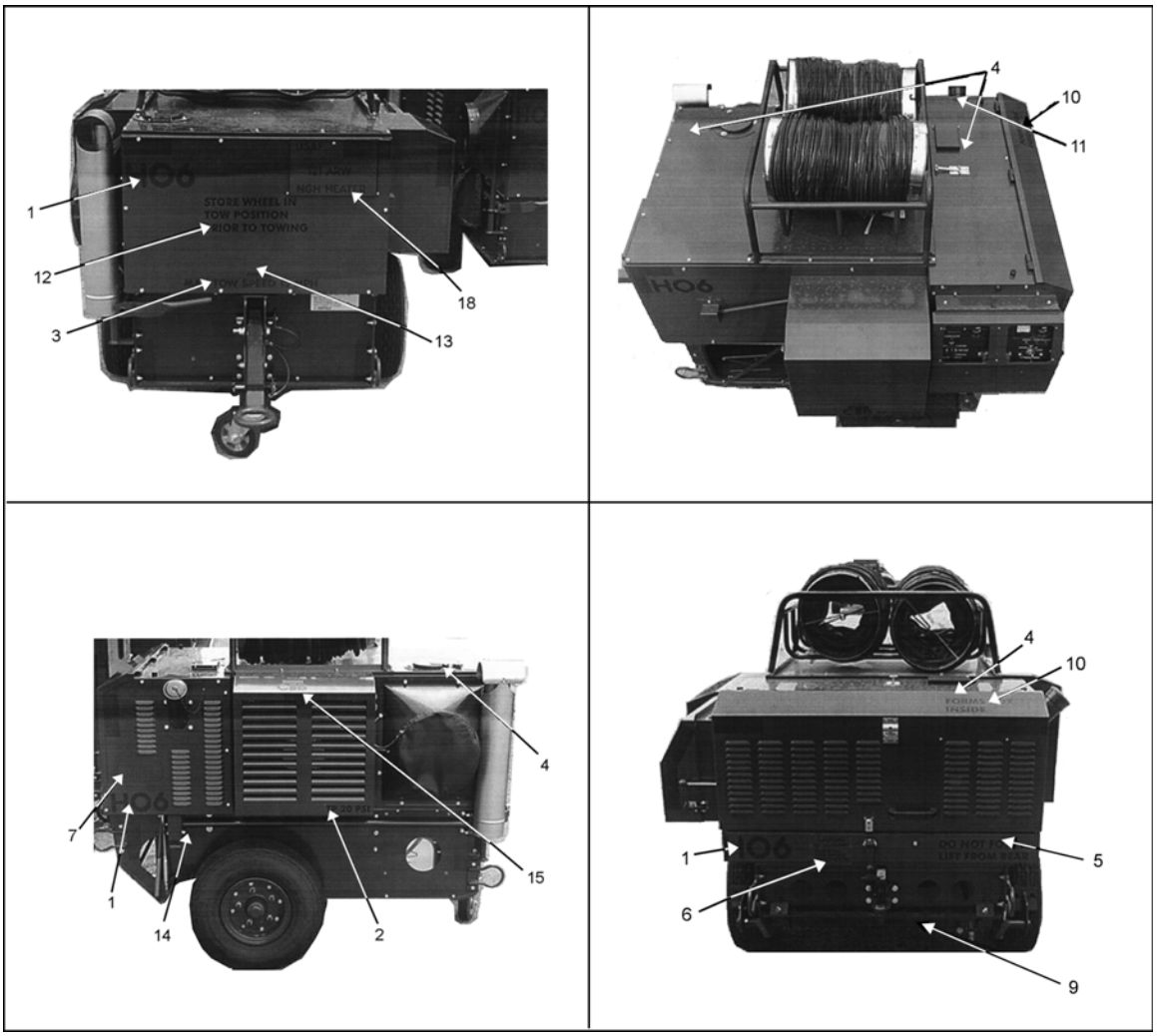

Figure 4-54. New Generation Heater (Sheet 1 of 2)

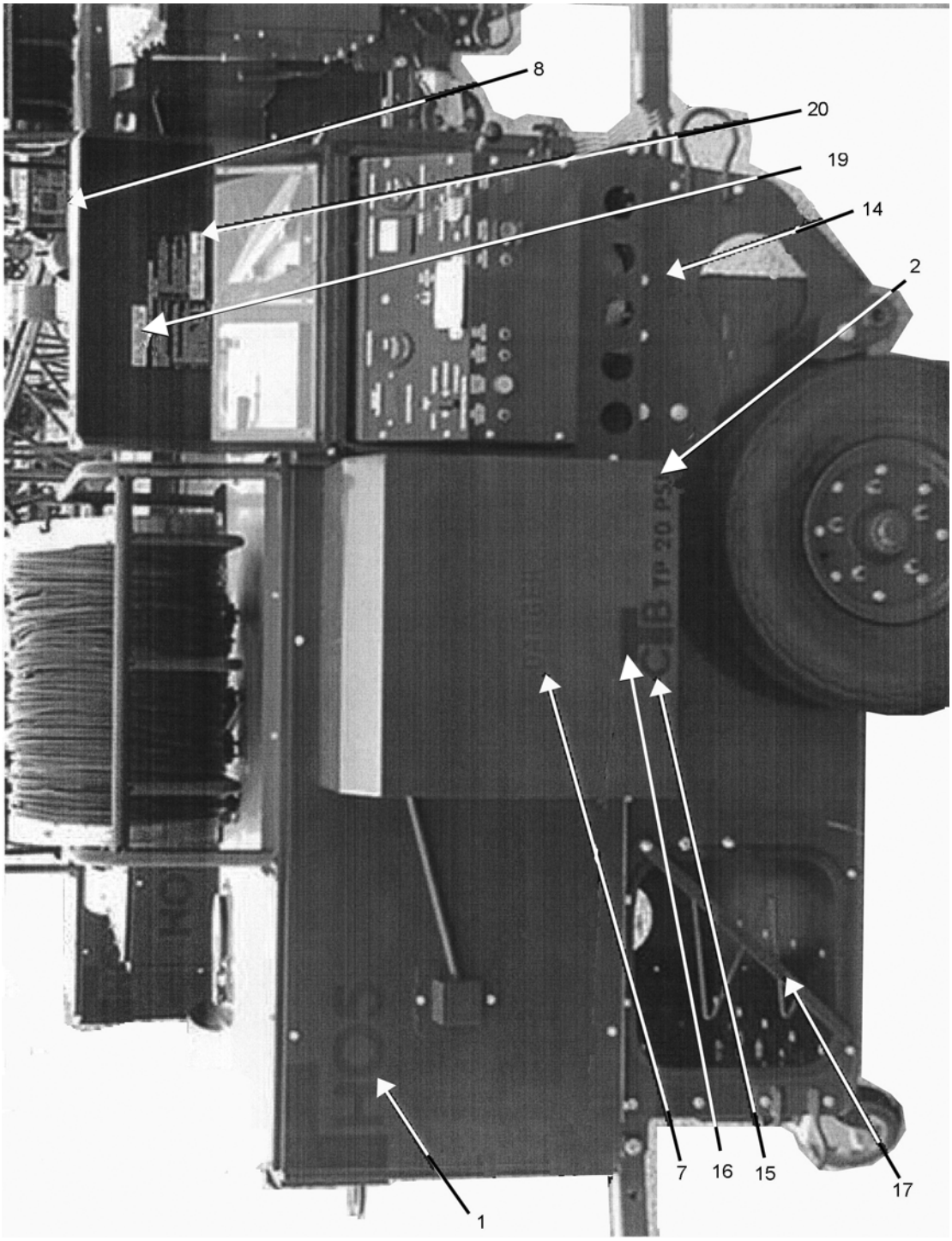

Figure 4-54. New Generation Heater (Sheet 2)

CHAPTER 5
CORROSION PREVENTION AND CONTROL OF HUSH HOUSES

5.1 MATERIALS.

There are three basic materials used in the construction of Hush Houses. The primary material being galvanized steel, the galvanizing will offer improved corrosion protection over the plain carbon steel. The second material used is carbon steel, which is susceptible to a corrosion environment. The third material used are Types 321 and 409 stainless steel that may be specified in numerous rework contracts for use in the hot section. Types 321 and 409 stainless steel is weldable and will offer adequate corrosion protection.

5.1.1 Fastener Replacement. Any fastener replacement should be accomplished using either stainless steel fasteners or hot dip galvanized fasteners.

5.2 REPAIR.

CAUTION

To prevent dissimilar metal related problems, do not use zinc plated or hot dipped zinc fasteners on stainless or corrosion resistant steel parts.

5.2.1 Galvanized Steel. The amount of corrosion present will determine what is required for repair. If the corrosion is minor, then either abrasively grind the corrosion or chemically treat with pretreatment compound. If the corrosion is severe or widespread, abrasive blasting may be required.

5.2.1.1 If an entire galvanized steel component is replaced, then every side of that component must be primed prior to installation. If any part of the installation process, such as welding, damages the paint, the exposed damaged area will be cleaned and repainted with thinned organic zinc-rich primer.

5.2.1.2 Hush House galvanized sheet should be hot dip galvanized per ASTM A446 Grade C, coating G-210.

5.2.2 Carbon Steel. All accessible carbon steel items require sandblasting prior to application of the respective zinc-rich paints. The sandblasting and subsequent painting of an assembled structure will provide protection to the exposed portion of the structure. If there is corrosion in a seam or joint, refer to Paragraph 5.2.2.2.

5.2.2.1 If an entire component (panel, plate, beam, support) is replaced. Then every side of that component must be primed prior to installation. If any part of the installation process, such as welding, damages the paint, the exposed damage area will be cleaned and repainted with thinned inorganic zinc-rich primer.

CAUTION

Failure to prime faying (back to back) surfaces of carbon steel will result in corrosion that cannot be treated without extensive repair or disassembly.

5.2.2.2 Carbon Steel (Angle Iron) seams, such as a T-angle, having corrosion, will require the following procedure to remove and treat corrosion.

a. Apply phosphoric acid corrosion removing compound. Allow the material to dwell on the surface for 30-45 minutes - add additional material to keep the surface wet. Agitate with thin bristled steel brush, if necessary, to remove heavier rust.

b. Rinse area and check for rust; metal conditioner if necessary.

c. Allow area to dry.

d. Mask gaps at lower sides of “angle iron” T's with masking tape per SAE-AMS-T-23397 or equivalent.

e. Fill entire gap using sealant MIL-PRF-81733, Type IV.

5.2.3 Stainless Steel. Characteristics of stainless steel are as follows.

NOTE

- Use of sealant gun is recommended for injecting sealant into entire gap.
- Above procedure should only be accomplished for treating existing corrosion problems in this area.

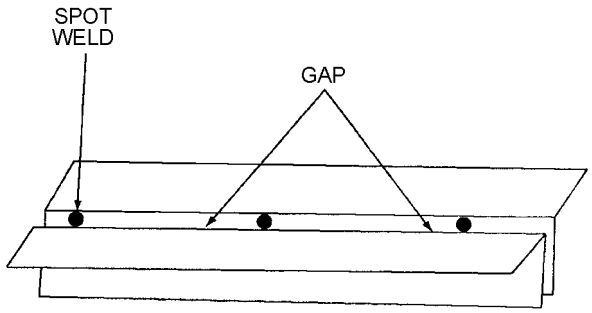

STRUCTURAL STEEL (ANGLE IRON) T GAPS/SEAMS

Figure 5-1. Angle Iron Sealant Application

5.2.3.1 Type 321 Stainless Steel. Type 321 stainless steel has good corrosion resistance to oxidation and corrosion. Because of a small amount of titanium, Type 321 stainless steel does not harden during welding and therefore, does not require a post weld relief. Normally, the steel has a shiny surface with areas of dull gray streaks. The streaking is caused by the titanium content and is not harmful.

5.2.3.2 Type 321 has the following weld properties:

- Gas Metal-Arc (MIG). When welding Type 321 to itself, use Type ER321 wire electrode.
- Shielded Metal-Arc (covered electrodes). Use ER321 wire electrode.
- Gas Tungsten-Arc (TIG). This procedure should be used when welding Type 321 to mild steel. Filler metals should be ER308L.

5.2.3.3 Do not coat Type 321 stainless steel with any of the zinc-rich paints. The zinc in the paints can embrittle the stainless steel under certain conditions. The use of Type 321 that is in contact with zinc-rich painted carbon steel (as in the hot section) is acceptable.

5.2.3.4 AISI 409 Stainless Steel. AISI 409 Stainless Steel is the lowest cost of all stainless steels yet it has good resistance to oxidation and corrosion. Because of a small amount of Titanium, the AISI 409 does not harden during welding and; therefore, does not require a post weld relief. Normally the steel has a shiny surface with areas of dull gray streaks. The streaking is caused by the titanium content and is not harmful.

5.2.3.5 The AISI 409 has the following weld properties:

- Gas Metal-Arc (MIG). The electrode wire should be Type 309 stainless steel when welding AISI 409 to mild steel. When welding AISI 409 to itself, use Type W 414 T filler.
- Shielded Metal-Arc (covered electrodes). Use W 17-4 PH, 12 Cr-4 MO or Type 330-04 electrodes.
- Gas Tungsten-Arc (TIG). When fillers are required, use Type 410 with 0.08% Max C or W 414 Ti. Helium shielding is preferred over argon shielding.

5.2.3.6 Do not coat the AISI 409 with any of the zinc-rich paints. The zinc in the paints can embrittle the stainless steel under certain conditions. The use of AISI 409 that is in contact with zinc-rich painted carbon steel (as in the hot section) is acceptable.

5.2.3.7 Sealing. Mating surfaces where moisture could enter from the top or horizontal will be sealed with sealant MIL-PRF-81733 (cold section) and sealant SAE-AMS-3374, Type I (hot section) after primer application and before topcoat application.

5.3 PRETREATMENT COMPOUNDS.

5.3.1 Rust Remover 81287 (Naval Jelly).

WARNING

Rust remover Permatex 81287 contains phosphoric and sulfuric acid. Use with adequate ventilation. Consult with the local bioenvironmental engineer for approved personal protective equipment. In event of skin or eye contact, flush immediately with plenty of water.

Rust remover Permatex 81287 is a biodegradable rust remover and pretreatment compound for galvanized steel.

5.3.1.1 Follow the manufacturer's application instructions for corrosion removal. Repeat the process until all corrosion is removed. Allow to air dry prior to the application of a protective coating.

5.3.1.2 Rust remover Permatex 81287 is available from:

Permatex
Rocky Hill CT, 06067
(860) 571-5100

5.4 PRIMERS.

5.4.1 Organic Zinc-Rich Primers. The primer will be one of the previously described zinc-rich primers as identified in Chapter 3.

5.4.1.1 Dry film thickness should be 3.0 mils and approximately 5.0 mils wet.

5.4.1.2 This primer requires top coating when used on exterior surfaces (refer to Table 5-1).

5.4.2 Inorganic Zinc-Rich Primers. MIL-PRF-23236, Type I, Class 3 is an inorganic zinc/rich primer that is usually furnished as two or three components.

5.4.2.1 Follow the manufacturer's instructions for mixing, thinning, and application.

5.4.2.2 Only those products listed on QPD-23236 are authorized.

5.4.2.3 During application of the MIL-PRF-23236 primer, the product should be constantly agitated to prevent the zinc dust from settling.

Table 5-1. Hush House Coating Chart

Area	Material	Primer	Topcoat
Hot Section (Exterior)	Carbon Steel	MWAS, 100% Aluminum or MIL-PRF-23236, Type VI, Class 13	MIL-PRF-85285
Door Structure	Carbon Steel	MWAS, 85/15% Zinc/Aluminum or Organic Zinc-Rich Primer MIL-PRF-26915	MIL-PRF-85285
Cold Section	Galvanized Steel	Permatex 81287 (Pretreatment) and Organic Zinc-Rich Primer MIL-PRF-26915 or MWAS, 85/15% Zinc/Aluminum	MIL-PRF-85285

5.5 PAINTING.

NOTE

Prior to total repaint of Hush House, accomplish corrosion repair procedures in accordance with Paragraph 5.2.

5.5.1 Structural Corrosion Protection. Corrosion protection for the Hush House consists of MIL-PRF-23236 inorganic zinc primed steel (door frame beams, support beams, exhaust tube) and ASTM A446, Grade G210 galvanized panels (roof, walls, door). This corrosion protection system should be adequate in all but extremely severe corrosion environments.

5.5.2 Camouflage Requirements. The selection of colors for an exterior camouflage pattern should be restricted to those readily available for MIL-PRF-85285. MAJCOM will determine the need and color requirements for the operating locations requesting the application of a camouflage pattern to the Hush House.

5.6 INORGANIC ZINC PRIMED SURFACES.

NOTE

- To prevent streaking and other problems, it is necessary to work from the bottom to the top and not allow previously worked surfaces to dry.
- The amount of surface area to be worked at any time should not exceed the surface area that can be epoxy primed and polyurethane topcoated in one day.

5.6.1 Primer Requirements on the Door Frame Beams, Support Beams, and Exhaust Tube. Primer requirements are as follows:

NOTE

Examine the primed surface prior to cleaning. If the surface appears to be dirty (not oily), then MIL-PRF-87937, Type IV soap should be sufficient to clean the surface. If the surface is oily, it will be necessary to use one of the soaps (MIL-C-43616 or MIL-PRF-

87937, Type I), which contain solvent. In either case, it is absolutely necessary that the surface be scrubbed while the soap is being applied. A clean water break free surface is necessary prior to additional treatment.

5.6.1.1 Preferably on the day prior to painting, the surface to be coated the next day is to be cleaned. Use aircraft cleaning soap, MIL-PRF-87937, or MIL-C-43616, as appropriate. Always clean from the bottom to the top to prevent streaking and have one person applying rinse water to previously cleaned surfaces to also prevent streaking.

5.6.1.2 Early on the second day, apply one coat of MIL-PRF-23377, Type I, Class 2, or MIL-DTL-53022, Type II (Lead and Chromate Free Epoxy Primer) primer to a dry film thickness of 0.6 to 1.1 mils. Drying time should be from one to two hours.

5.6.1.3 Apply two thin coats of polyurethane MIL-PRF-85285 (total dry film thickness of 1.6 to 2.4 mils).

5.6.1.4 After the first topcoat has been allowed to dry a maximum of 4-6 hours, apply the desired camouflage pattern. If using polyurethane, lightly scuff sand the area to be overcoated, then solvent wipe with Acetone, O-A-51, ASTM D329, prior to painting.

5.7 GALVANIZED SURFACES.

NOTE

To prevent streaking and other problems, it is necessary to work from the bottom to the top and not allow previously worked surfaces to dry. The amount of surface area to be worked at any time should not exceed the surface area that can be zinc conversion coated epoxy primed and polyurethane topcoated in one day.

5.7.1 Roof. Drape a barrier of paint drop cloths, barrier paper or other suitable material on the walls directly below area of roof to be worked. The drape should be such to prevent fluids from contacting the wall.

NOTE

Examine the galvanized surface prior to cleaning. If the surface appears to be dirty (not oily), then MIL-PRF-87937, Type IV soap should be sufficient to clean the surface. If the surface is oily, it will be necessary to use one of the soaps (MIL-C-43616, Type II or MIL-PRF-87937, Type I), which contain solvent. In either case, it is absolutely necessary that the surface be scrubbed while then soap is being applied. A clean water break free surface is necessary prior to additional treatment.

5.7.1.1 On the day prior to painting, the surface to be coated the next day is to be cleaned. Use aircraft cleaning soap MIL-PRF-87937 as appropriate. Always clean from the bottom to the top to prevent streaking and have one person applying rinse water to previously clean surfaces to also prevent streaking.

5.7.1.2 Early on the second day, apply the pretreatment compound. Again work from bottom to top applying the compound. Keep lower surfaces (even where the pretreatment compound was previously applied) flooded with water to prevent streaking.

5.7.1.3 As soon as the pretreatment compound has dried, apply one coat of organic zinc-rich primer to a dry film thickness of 2.0 to 3.0 mils.

5.7.1.4 Apply one heavy coat of polyurethane MIL-PRF-85285 (dry film thickness of 1.6 to 2.4 mils).

5.7.1.5 After the entire roof has been topcoated and allowed to dry a maximum of 4-6 hours, apply the desired camouflage pattern. If using polyurethane, lightly scuff sand the area to be overcoated, then wipe with a scotch-brite pad, A-A-58054, Type I, Grade A, dampened with MIL-PRF-87937 diluted per manufacturer's instructions. After wiping with cleaner, rinse surface with clean cloth dampened with water and dry with clean cloth prior to painting.

5.7.2 Walls and Doors. The walls should be worked only after the roof painting is complete. Work on the door can be accomplished as desired. The air intake space in the wall formed by the screen wire and acoustical panels must be protected during repainting operations to prevent entry of chemicals and paints. Cut pieces of plywood (or other barrier type materials) and push the plywood against the screen wire from the interior side. Because of the difficulty in cleaning and painting the solid wall area formed by acoustical panels and screen wire, it is recommended that a galvanized panel equal in width and length be fabricated and attached to the solid wall areas by means of locally fabricated standoffs.

CHAPTER 6
CORROSION PREVENTION AND CONTROL OF NOISE SUPPRESSOR SYSTEMS (NSS)

6.1 GENERAL.

NSS are divided into the Cold Section (temperatures of less than 300 °F) and the Hot Section (temperatures of 300 °F or more). Table 5-1 will identify the coating for a particular section based on the material and temperature. Earlier NSS were coated with alkyd enamels (TT-E-489, TT-E-527) and high temperature aluminum paint (TT-P-28) both of which are ineffective for corrosion prevention.

6.2 MATERIALS.

There are three basic materials used in the construction of NSS. The primary material being carbon steel this is extremely susceptible to the corrosive environment generated by the suppressor. The second material used is galvanized steel and the galvanizing will offer improved corrosion protection over the plain carbon steel, but can be used only in the Cold Section due to temperature limitations of the galvanizing. The third material used is AISI 409 stainless steel and the material has been specified in numerous rework contracts for use in the Hot Section. AISI 409 is the least expensive of all stainless steel, is weldable and will offer adequate corrosion protection.

6.3 FASTENER REPLACEMENT.

Any fastener replacement should be accomplished using either stainless steel fasteners or hot dip galvanized fasteners per ASTM A394, A325, or A153 (as applicable).

6.4 STRUCTURAL REPAIR.

6.4.1 Structural Repair Carbon Steel.

CAUTION

- Failure to prime faying (back to back) surfaces of carbon steel will result in corrosion that cannot be treated without disassembly.

All carbon steel items require sandblasting prior to application of the respective zinc-rich paints. The sandblasting and subsequent painting of an assembled structure will provide protection to the exposed portion of the structure, but if there is corrosion in a seam or joint, then disassembly would be required.

6.4.1.1 If an entire component (panel, plate, beam, support) is replaced, then every side of that component must be primed prior to installation. If any part of the installation process, such as welding, damages the paint, the exposed damaged area will be cleaned and repainted after installation.

6.4.2 Galvanized Steel. The amount of corrosion present will determine what is required for repair. If the corrosion is minor, then grind the corrosion and recoat with the pretreatment MIL-P-15238, and epoxy primer, MIL-PRF-23377, or MIL-DTL-53022, Type II. If the corrosion is severe or widespread, abrasive blasting may be required. When galvanized steel has been sandblasted, the primer will be organic zinc-rich.

6.4.2.1 If an entire galvanized steel component is replaced, then every side of that component must be primed prior to installation. If any part of the installation process, such as welding, damages the paint, the exposed damaged area will be cleaned and repainted after installation.

6.4.2.2 Any replacement galvanized sheet should be hot dip galvanized per ASTM A525, coating G-210. All structural steel in the galvanized condition should be hot dip galvanized per ASTM A123.

6.4.3 AISI 409 Stainless Steel. Characteristics of AISI 409 Steel are as follows:

6.4.3.1 AISI 409 Stainless Steel is the lowest cost of all stainless steels yet it has good resistance to oxidation and corrosion. Because of a small amount of titanium, the AISI 409 does not harden during welding and; therefore, does not require a post weld relief. Normally the steel has a shiny surface with areas of dull gray streaks. The streaking is caused by the titanium content and is not harmful.

6.4.3.2 The AISI 409 has the following weld properties:

- Gas Metal-Arc (MIG). The electrode wire should be Type AISI 409 to mild steel. When welding AISI 409 to itself, use Type 309 stainless steel when welding W 414 T filler.

- Shielded Metal-Arc (covered electrodes). Use W 17-4 PH, 12 Cr-4 MO or Type 330-04 electrodes.

- Gas Tungsten-Arc (TIG). When fillers are required, use Type 410 with 0.08% Max C or W 414 Ti. Helium shielding is preferred over argon shielding.

6.4.3.3 Do not coat the AISI 409 with any of the zinc-rich paints. The zinc in the paints can embrittle the stainless under certain conditions. The use of AISI 409 that is in contact with zinc-rich painted carbon steel (as in the Hot Section) is acceptable.

6.5 SEALING.

Mating surfaces where moisture could enter from the top or horizontal will be sealed with sealant MIL-PRF-81733 (cold section) or sealant SAE-AMS-3374, Type I (hot section) after primer application and before topcoat application.

6.6 PRIMERS.

WARNING

Respirator with organic vapor cartridges is required for all painting/priming operations unless Bioenvironmental Engineer has approved the work place for no respirator protection.

6.6.1 Organic Zinc-Rich Primers. The primer will be one of the previously described primers as identified in Chapter 3.

6.6.1.1 Dry film thickness should be 3.0 mils and approximately 5.0 mils wet.

6.6.1.2 Prior to repainting the exhaust area (or initiating a contract for repaint) it is important to know the surface temperature of the exterior walls of the exhaust section. Approximate temperatures can be obtained with the use of Wahl Temp-Plate, Wahl Instruments, Inc., Culver City, California (800) 421-2853, or equivalent. If the temperature is below 300 °F this area shall be coated with Cold Section finishes.

6.6.2 MIL-PRF-23236, Type I, Class 3. MIL-PRF-23236, Type I, Class 3 is an inorganic zinc-rich primer that is usually furnished as two or three components.

6.6.2.1 Follow the manufacturers' instructions for mixing, thinning, and application.

6.6.2.2 Only those products listed on QPD-23236 are authorized.

6.6.2.3 During application of MIL-PRF-23236 primer, the product should be constantly agitated to prevent the zinc dust from settling.

6.6.3 Heat Resistant Primer Briner 2905. Instructions for applying Briner 2905 are as follows:

NOTE

Briner 4765 or Briner 2905 shall be used as a primer for Briner 2986.

6.6.3.1 Briner 2905 is two component, silver, heat resistant silicone coating. The zinc powder must be mixed into the SE before using.

6.6.3.2 Thinning should not be necessary, but the coating can be thinned with Briner 70 Silicone Reducer to facilitate spray painting.

6.6.3.3 Apply Briner 2905 by conventional spray. De Vilbiss MBC-510 Gun, 704 Air cap with E needle and Tip or, the equivalent in Binks.

6.6.3.4 Drying time is one hour (dust free), but will require 400 °F temperature before it cures completely. Curing with topcoat applied can be accomplished by normal operation of the suppressor.

6.6.3.5 Apply one coat with a dry film thickness of 2.5 mils. A dry film of 2.5 mils will require a 5.0 mil wet film thickness.

6.6.3.6 Briner coatings are available from:

Briner Paint Mfg. Company
3713 Agnes Street
Corpus Christi, TX 78405
(512) 884-4804

6.6.4 Heat Resistant Silicone Coating - Briner 2986. Instructions for applying Briner 2986 are as follows:

NOTE

Briner 2986 shall be used only as a topcoat for Briner 2905 or Briner 4765.

6.6.4.1 Briner 2986 is a one component, black, heat resistant silicone coating. The material is ready mixed, but should be thoroughly stirred before use.

6.6.4.2 Thinning can be accomplished using Briner 70 Silicone Reducer.

6.6.4.3 Apply Briner 2986 by brush, conventional spray, or airless spray.

Conventional	Airless
78, 765, 704 Air cap with E or EX needle and tip. De Vilbiss MBC-510 Gun or the equivalent in Binks	0.017-inch tip at 1,700 lbs

6.6.4.4 Briner 2986 will not cure without 350 - 400 °F for 1 hour. The coating will not cure during normal operation of the suppressor.

6.6.4.5 Two coats at 1.5 mils each of dry film are recommended. A dry film of 1.5 mils will require a 4.5 mil wet film thickness.

6.6.5 High Temperature Resistant Silicone Coating - Briner 4765. Briner 4765 is a two component, gray, high temperature resistant silicone coating.

6.6.5.1 The zinc powder must be mixed into the SE before using.

6.6.5.2 Thinning should not be necessary but Briner 4765 can be thinned with Briner 70 silicone reducer.

6.6.5.3 Apply Briner 4765 by conventional spray. De Vilbiss MBC-510 Gun, 704 Air cap, an E needle and tip or the equivalent in Binks.

6.6.5.4 Drying time is one hour (dust free). Curing with topcoat applied can be accomplished by normal operation of the suppressor.

6.6.5.5 Apply one coat of Briner 4765 with a dry film thickness of 2.5 mils; this will require a wet film thickness of 5.0 mils.

6.6.6 High Temperature Resistant Silicone Coating Thurmalox 270-18. Instructions for applying Thurmalox 270-18 are as follows:

NOTE

Thurmalox 270-18 shall be used as a topcoat for MIL-PRF-23236, Type I.

6.6.6.1 Thurmalox 270-18 is low-sheen green, one-component, heat resistant coating of silicone resin.

6.6.6.2 Mix to a uniform consistency by ordinary stirring.

6.6.6.3 Thinning can be accomplished using Thurmalox 295 thinner. Do not use more than 1 1/2 pints per gallon.

6.6.6.4 Apply Thurmalox 270-18 by airless, conventional, or electro-static spray equipment. The following equipment is recommended by the manufacturer as a guide:

Spray gun	DeVilbiss P-MBC or JGA
Air hose	5/16" (I.D.)
*Fluid hose	3/8" (I.D.)
Air cap	704
Fluid nozzle	FX (0.042")
Pot pressure	15 - 20 lbs
Atomizing pressure	40 - 45 lbs
Needle adjustment	Half open
Distance from work	8 - 10 in

* Smaller hose diameters, or hose lengths greater than 25 feet, may make it necessary to increase pressures.

6.6.6.5 Drying time at 77 °F, set to touch, is 30 minutes.

6.6.6.6 Dry film thickness should be 1.0 mil.

CHAPTER 7
SOUTHWEST ASIA OPERATIONS AND ENVIRONMENTS

7.1 GENERAL.

The Southwest Asia (SWA) Area of Responsibility (AOR) consists of various regions from Afghanistan to South Africa (Figure 7-1). The environmental conditions range from seasonal high winds and high humidity to arid areas and low winds. In many locations, there are negatively charged ions called anions in soils which when combined with aggressive sand storms, can spread through SWA. The degree that sand and dust can penetrate equipment is dependent on many variables such as wind speed and direction, size of the dust/sand particles, protective shelter availability, and condition of the equipment, such as deteriorated seals/gaskets and bent doors.

Figure 7-1. SWA AOR

7.1.1 Environmental Effects. Extensive operations in a desert can result in very fine sand and dust intrusion into SE. SE that is positioned in SWA for extended periods is more prone to exhibit significant corrosion problems. Sandstorms, which are usually seasonal, can cause sand/dust to penetrate equipment and become entrapped in inaccessible areas. During the periods of relative calm there are usually significant amounts of airborne dust, seen as a general haze, in the atmosphere.

7.1.1.1 Soils and Humidity. Soils exposed to high humidity in many of the operating SWA AOR locations will cause corrosion or accelerate existing corrosion growth if left in contact with metal surfaces. Even in arid areas, humidity is usually present. During daylight hours, SE stored outdoors will heat up causing expansion of panels which allows hot, moist air to migrate into enclosed areas (Figure 7-2) or under non-permeable equipment covers. When the equipment cools, the moisture condenses and combines with the fine dust/sand particles, increasing the potential for corrosion. The soluble materials in the dust/sand form a crust as they dry (Figure 7-3) making removal difficult. Anion-laden sand/dust entrapped in SE exposed to high humidity will gather in the available moisture, extract the soluble salts, and a corrosion cell could be established. These salts will appear as white streaks on SE after the water has evaporated off the units (Figure 7-3).

Figure 7-2. Sand/Dust Intrusion

Figure 7-3. Residue from Salts Caused by Condensation

7.2 SE SWA AOR DEPLOYMENT.

7.2.1 Pre-deployment. Prior to deployment of SE to SWA AOR it is recommended that the following actions be taken to prevent sand/dust intrusion during deployment.

a. Accomplish a complete SE wash per Chapter 2 prior to deployment.

b. Inspect entire exterior/interior surfaces for missing or deteriorated primer/paint.

c. Touch-up all deficient areas with approved processes and materials per Chapter 3.

d. Inspect and remove any standing water in unit.

e. Inspect and clean all drain holes.

f. Minimize lubrication by removing all excess greases/oils to limit sand/dust entrapment.

7.2.2 Deployment Location. Soils in SWA AOR locations should be considered suspect and removed on a regular basis. A constant regimen of vacuuming or brush removal of sand/dust accumulations is necessary to reduce potential corrosion problems.

7.2.2.1 SE Units Requiring Additional Cleaning. Some units require additional cleaning process due to air filters, exposed lubrication areas, and areas that may be more prone to sand/dust entrapment.

7.2.2.1.1 Radiators, Vanes, Filters and Coils. SE that have radiators, vanes, filters, and coils require additional cleaning to remove dust/sand that can block cooling ports and filters which are drawn into the units during operation. Clean using engineering approved materials. Allow the units to dry in an enclosed area to prevent airborne sand/dust from adhering to wet surfaces.

7.2.2.1.2 Portable Hydraulic Test Stands/Mobile Air Compressors. These units typically have interior fluid leaks that will allow sand/dust to cling to the surfaces. Close inspection and wipe down of these units are necessary to maintain proper operation.

7.2.2.1.3 Aircraft Jacks and Tow Bars. Jackscrew bodies and adjustable arms should be kept free of sand/dust at all times. The use of locally manufactured permeable covers (Figure 7-4) will assist in prevention of sand/dust intrusion. Lubricate units using corrosion preventive compound, MIL-L-87177, Type 1 to reduce corrosion problems.

Figure 7-4. Locally Manufactured Permeable Covers

7.2.2.1.4 Open Circuit Boards/Cards. After cleaning open circuit boards/cards per TO 1-1-689-3, apply a thin coat of avionics grade corrosion preventive compound, MIL-PRF-81309, Type III, to the board to insulate the circuits from sand/dust intrusion.

7.2.2.1.5 Wire Bundles. Sharp angular sand/dust particles can migrate into wiring bundles where vibration caused by equipment operation can result in abrasive action that can cause chafing of the wiring (Figure 7-5). Remove trapped sand from around and between bundled wires to prevent electrical problems.

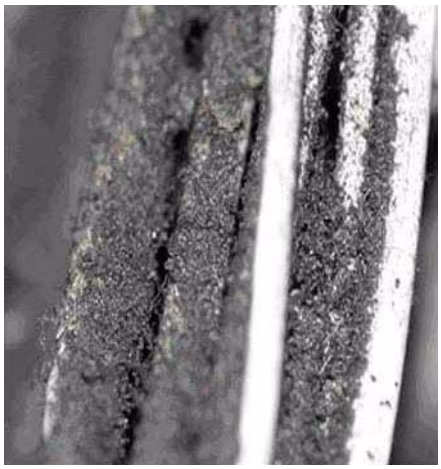

Figure 7-5. Wire Bundle Sand/Dust Accumulation

7.2.2.1.6 Felt-Soundproofing Insulation. Periodically inspect areas where felt-soundproofing insulation is present for moisture and/or sand/dust accumulations. Insulation found to be wet should be removed and allowed to dry before replacing or replaced with new clean, dry insulation. Inspect areas behind insulation for corrosion or deteriorated coatings. Repair areas as required prior to reinstalling installation.

7.2.3 Maintenance Touch-Up Painting. Maintenance touch-up painting of small areas should be accomplished when bare metal surfaces are exposed to prevent further deterioration and protect against corrosion. Touch-up painting should only be accomplished using approved touch-up materials listed in Chapter 3.

7.2.3.1 Temporary Coating Repair. Temporary coatings are to be used to protect the surfaces until the unit can be permanently repaired as required. Corrosion preventive compound, MIL-DTL-85054 is a water displacing CPC that forms a clear, dry, flexible film on the surface. This is temporary and will require reapplication as needed. Refer to Chapter 3 for application and removal instructions.

7.2.3.2 Permanent Authorized Touch-Ups. For permanent touch-up of small areas use only authorized coating systems listed in Table A-1. The use of primer and topcoat are required for permanent touch-ups.

7.2.4 Equipment Storage. In the harsh environments of SWA it is recommended that SE be stored indoors or under covers. Permeable fabric covers are recommended for short and long-term storage of equipment. These covers can be purchased or locally manufactured. They allow for airflow to prevent condensation and sand/dust buildup on/in the equipment.

APPENDIX A
EQUIPMENT AND CONSUMABLE MATERIALS USED FOR CORROSION CONTROL

A.1 EQUIPMENT AND CONSUMABLE MATERIALS.

Table A-1. Equipment and Consumable Materials List

Nomenclature/Description	Specification	Stock Number	Unit of Issue
CAUTION • The following RTV silicone sealants are corrosive and will not be used on ground support equipment. • DC Silastic 730 RTV, 732 RTV, 734 RTV, 736 RTV, 784 RTV, 1890 RTV; DC 781 RTV, 4-2817, 90406 RTV, 93-006 RTV, 96-081 RTV, GE RTV 102, RTV 103, RTV 106, RTV 108, RTV 109, RTV 112, RTV 116, RTV 118, RTV 157, RTV 159, RTV 1502, RTV 1503, RTV 1508. • The following RTV silicone sealants are corrosive and have been discontinued but may be remaining in the supply system. These sealants will not be used on ground support equipment. • DC Silastic 140 RTV, 142 RTV, 731 RTV, 785 RTV, 891 RTV; DC 236 RTV, 780 RTV, 3144 RTV, 20-046 RTV, 20-078 RTV, 30-079 RTV, 30-121 RTV, 90-092 RTV, 92-005 RTV, 92-007 RTV, 92-009 RTV, 92-018 RTV, 92-024 RTV, 92-048 RTV, 92-055 RTV, 93-043 RTV, 94-002 RTV, 94-003 RTV, 94-009 RTV, 94-034 RTV, 96-005 RTV, 96-080 RTV, Q3-6069 RTV. • GE RTV 154, RTV 156, RTV 158, RTV 192, RTV 198			
Abrasive Blasting Media, Glass Beads	MIL-PRF-9954		
	Sieve Size 8	5350-00-012-1869	CO (50 LB)
	Sieve Size 10	5350-00-110-2981	CO (50 LB)
	Sieve Size 13	5350-00-576-9634	CO (50 LB)
	Sieve Size 2	5350-00-935-7697	BG (50 LB)
	Sieve Size 3	5350-00-935-7698	CO (50 LB)
	Sieve Size 6	5350-00-950-9766	CO (50 LB)
	Sieve Size 12	5350-01-023-0302	BG (50 LB)
	Sieve Size 5	5350-01-368-6707	BG (50 LB)
	Sieve Size 1	5350-01-565-8141	CO (50 LB)
Adhesive-Sealant Silicone, Room Temperature Vulcanizing (RTV) Non-corrosive	MIL-A-46146		
	Type I White	8030-00-938-1535	TU
	Type I White	8040-00-118-2695	TU
	Type I White	8040-00-938-1535	TU
	Type I, (High Strength)	8040-00-117-8510	TU
	Type I, (High Strength)	8040-00-144-9774	CA
	Type I, (High Strength)	8040-00-145-0020	TU

Table A-1. Equipment and Consumable Materials List - Continued

Nomenclature/Description	Specification	Stock Number	Unit of Issue
Alcohol, Isopropyl	TT-I-735	6810-00-753-4993	CN
		6810-00-983-8551	QT
		6810-00-286-5435	GL
Applicator, CPC FORMIT® 90 degree angle	The non-stocklisted Formit spray wands are described with the middle number being the length of the spray can wand. The second designator is the type of spray pattern issuing from the wand such as 360 is a full circle, F is a fan, and FOG is a fine mist. STD-FOG signifies the fogging spray comes from the center of the spray-head. The 90-FOG signifies the spray comes from the side of the spray head. Formit applicators may be obtained from Zip-Chem Products, 1860 Dobbin Drive, San Jose, CA 95133,1-800-648-2661	6850-01-492-2942	DZ
Formit-18-360 PN 006227		NSL	DZ
Formit-18-F PN 006224		NSL	DZ
Formit-18-FOG PN 008352		NSL	DZ
Formit-18-90-FOG PN 009134		NSL	DZ
Formit-18-180 PN 006226		NSL	DZ
Formit-36-F PN 009130		NSL	DZ
Formit-36-360 PN 009131		NSL	DZ
Formit-48-STD-FOG PN 009133		NSL	DZ
Formit-48-360 PN 009132		NSL	DZ
Formit-48-90-FOG PN 009134			
Barrier Material, Water Vaporproof, Flexible, 36"	MIL-PRF-121, Grade A, Type 2, Class I	8135-00-753-4661	RO
Barrier Material, Water Vaporproof, Flexible, Heat Sealable, 36"	MIL-PRF-131, Class I	8135-00-282-0565	RO
Cleaner, Pipe	840507	9920-00-292-9946	PG
Cleaning Compound, Aerospace Equipment	MIL-PRF-87937, Type I	6850-01-390-7808	GI
		6850-01-390-7811	Cn
		6850-01-390-7816	Dr
		6850-01-390-7821	Bulk
	MIL-PRF-87937, Type III	6850-01-390-9530	G1
		6850-01-390-9453	Dr
		6850-01-390-9558	Bulk
	MIL-PRF-87937, Type IV	6850-01-429-2368	G1
		6850-01-429-2371	Dr
Cleaning Compound, Aircraft Exterior	MIL-PRF-85570, Type I	6850-01-237-7482	Cn
		6850-01-237-8003	15 G1
		6850-01-237-8004	Dr
	MIL-PRF-85570, Type II	6850-01-239-0571	G1
		6850-01-235-0872	Cn
		6850-01-248-9828	15 G1

Table A-1. Equipment and Consumable Materials List - Continued

Nomenclature/Description	Specification	Stock Number	Unit of Issue
Cleaning Compound, Aircraft Exterior - Continued		6850-01-236-0128	Dr
	MIL-PRF-85570 Type III	6850-01-232-9164	Cn
	MIL-PRF-85570 Type IV	6850-01-235-0873	Cn
		6850-01-248-9829	15 G1
		6850-01-248-9830	Dr
	MIL-PRF-85570 Type V	6850-01-234-0219	Cn
		6850-01-248-9831	15 G1
		6850-01-235-7458	Dr
Cloth, Cleaning, Non-woven, Fabric	CCC-C-46	7920-00-292-9204	MX
	Class 4, (Extra Heavy Duty)	7920-01-180-0556	BX
	Class 7, (Aircraft Solvent Wiper)	7920-01-180-0557	BX
Coating, Polyurethane, Flat Advanced Performance Coating/Extended Life Topcoat			
36118 Gray	99GY013	8010-01-501-5577	EA
37038 Black	99BK004	8010-01-501-5590	EA
Coating, Polyurethane, Flat Touchup Brush			
31136 Red	MIL-PRF-85285, Type I,	8010-01-441-6008	EA
33538 Yellow	SEMPEN	8010-01-441-6009	EA
35044 Dark Blue	Color per Fed Std 595	8010-01-441-6010	EA
36118 Gray		8010-01-441-6021	EA
37038 Black		8010-01-441-6028	EA
37875 White		8010-01-441-6016	EA
Coating, Polyurethane, Gloss Advanced Performance Coating/ Extended Life Topcoat	MIL-PRF-85285, Type I, Preval Spray/ Power Pack Spray System		
11136 Red Gloss	99R020-1TU	NSL	EA
12197 International Orange	990R003-ITU	8010-01-501-5573	EA
13538 Yellow	99Y014-1TU	NSL	EA
15044 Dark Blue	99BL013	NSL	EA
16473 Light Gray	99GY029	8080-01-501-5574	EA

Table A-1. Equipment and Consumable Materials List - Continued

Nomenclature/Description	Specification	Stock Number	Unit of Issue
17038 Black	99W035	8010-01-501-5575	EA
17925 White	99W009	8010-01-501-5576	EA
Coating, Polyurethane, Gloss Touchup Brush			
Clear		8010-01-441-6070	EA
11136 Red Gloss		8010-01-441-6018	EA
12197 International Orange	MIL-PRF-85285, Type I,	8010-01-441-6019	EA
13538 Yellow	SEMPEN	8010-01-441-6003	EA
15044 Dark Blue	Color per Fed Std 595	8010-01-441-6004	EA
15050 Dark Blue		8010-01-441-6005	EA
16473 Light Gray		8010-01-441-6020	EA
17038 Black		8010-01-441-6026	EA
17925 White		8010-01-441-6029	EA
Coating, Polyurethane, Semi-Gloss Advanced Performance Coating/ Extended Life Topcoat			
23538 Yellow	99Y013	NSL	EA
24052 Forest Green	99GN001	NSL	EA
27038 Black	99BK005	NSL	EA
Coating, Polyurethane, Semi-Gloss	MIL-PRF-85285, Type I Color Chip per Fed Std 595		
	26173 Gray		
	Type I	8010-01-339-7015	2-GL KT
	Type I	8010-01-344-3219	2-QT KT
	Type I	8010-01-532-5336	10 cc SEMPEN
	Type I	8010-01-532-5337	2 oz Jar/ Container (Preval Sprayer)
Coating, Polyurethane, Semi-Gloss Touchup Brush	MIL-PRF-85285, Type I, SEMPEN, Color per Fed Std 595		
24052 Semi-Gloss Forest Green		8010-01-441-6006	EA

Table A-1. Equipment and Consumable Materials List - Continued

Nomenclature/Description	Specification	Stock Number	Unit of Issue
Coating, Polyurethane, Flat Touch-up Brush	MIL-PRF-85285, Type I, SEMPEN Brush		
	31136 Red	8010-01-441-6008	Ea
	33538 Yellow	8010-01-441-6009	Ea
	35044 Dark Blue	8010-01-441-6010	Ea
	36118 Gray	8010-01-441-6021	Ea
	37038 Black	8010-01-441-6028	Ea
	37875 White	8010-01-441-6016	Ea
Coating, Polyurethane, 2-Component Aerosol	MIL-PRF-85285 Touch-up		
	26173 Gray Semi-Gloss	8010-01-538-9341	BX (6 Cans)
	36118 Gray Matte	8010-01-528-4851	BX (6 Cans)
		8010-01-573-5155 (6 oz)	
	37038 Black Matte	8010-01-528-4866	BX (6 Cans)
	11136 Insignia Red, Gloss	8010-01-528-4840	BX (6 Cans)
	15044 Insignia Blue, Gloss	8010-01-528-4841	BX (6 Cans)
	16473 Light Gray Gloss	8010-01-528-4844	BX (6 Cans)
	17038 Black Gloss	8010-01-528-4847	BX (6 Cans)
	17925 Insignia White Gloss	8010-01-528-4848	BX (6 Cans)
	24052 Green Semi-Gloss	8010-01-528-4849	BX (6 Cans)
Coating, Primer, Epoxy Chromated, 2-Component Aerosol	MIL-PRF-23377, Type I, Touch-up	8010-01-528-4864	BX (6 Cans)
		8010-01-573-7608 (6 oz)	
Coating, Primer, Epoxy Polyamide	MIL-PRF-23377		
Yellow	02Y040-2TU	8010-01-387-1033	KT
Coating, Primer, Epoxy Polyamide Touch-up	MIL-PRF-23377, SEMPEN		
Yellow		8010-01-441-6030	BX (24 EA)
Coating, Preservative Rubber	A-A-52408 (MIL-P-11520)	8030-01-282-5626	GL
Coating, Walkway Compound Non-slip	A-A-59166		
	Dark Gray 36231	5610-00-641-0426	GL
	Light Gray 36440	5610-00-141-7842	GL
	Black 37038	5610-00-641-0427	GL

Table A-1. Equipment and Consumable Materials List - Continued

Nomenclature/Description	Specification	Stock Number	Unit of Issue
Corrosion Preventive Compound	MIL-PRF-16173, Grade 4,16 oz aerosol	8030-00-142-9281	CN
Corrosion Preventive Compound	MIL-PRF-16173, Grade 2	NSL	CN
Corrosion Preventive Compound	MIL-PRF-81309, Type II, 16 oz aerosol	8030-00-938-1947	CN
Corrosion Preventive Compound	MIL-PRF-81309, Type III, 16 oz aerosol	8030-00-546-8637	CN
Corrosion Preventive Compound	MIL-DTL-85054	8030-01-041-1596	CN
Corrosion Preventive Compound	MIL-DTL-85054	8030-01-045-4780	QT
Corrosion Preventive Compound, Lubricant, Cleaner, and Preservative for Weapons and Weapons Systems (CLP)	MIL-PRF-63460D	9150-01-079-6124 9150-01-054-6453 9150-01-327-9631	BT PT QT
Corrosion Preventive Compound, Electronics Grade with VCI	MIL-L-87177A	6850-01-328-3617	CN
Disc, Clean 'N Strip, 3 Inch		5345-01-070-0447	EA
Disc, Rubber Wheel, 4 inch	PN 07498	5345-01-549-0264	EA
Eraser, Typewriter		7510-00-619-7714	EA
Eraser, Pencil Ruby Red		7510-00-223-7046	EA
Film, Abrasion Resistant Scotch Brand Polyurethane		9330-00-124-3730	RO
Mandrel, For Disc		3460-00-150-7164	EA
Pad, Abrasive, Non-woven, Non-metallic	A-A-58054 Grade A (Very Fine) Grade B (Fine) Grade C (Medium)	 5350-00-967-5089 5350-00-967-5093 5350-00-967-5092	 BX BX BX
Paper, Abrasive Aluminum Oxide, Non-waterproof	240 Grit 320 Grit	5350-00-224-7205 5350-00-246-0330	PG PG
Paper, Abrasive Silicon Carbide, Waterproof	320 Grit	5350-00-867-7665	PG

Table A-1. Equipment and Consumable Materials List - Continued

Nomenclature/Description	Specification	Stock Number	Unit of Issue
Paper, Abrasive, Silicon Carbide, Disc, Pressure Sensitive Backing	180 Grit 3M (05114-01469) 280 Grit 3M (058144-01466)	 5345-01-074-9404 5345-01-074-9406	 RO RO
Pneumatic Vibrogun Sealant Removal Kit, Envision Pneumatic (Includes: 1 Ea Ingersoll Rand 1000 RPM Right Angle Drive, 1/4 in Threaded Chuck Pneumatic Drill Motor; 1 Tube with 5 EA #8 SR Cutters; and 1 Tube with 5 EA #3 SR Cutters	PN 8400K, CAGE Code #65956	5130-01-514-0853	EA
Pretreatment Aluminum, Chromate Conversion Coating	MIL-DTL-81706 SEMPENS	8030-01-460-0246	CS
Primer, Waterborne Epoxy			
Remover Sealant, SkyKleen® 1000		NSL	GL
Sealing Compound, Low Adhesion, Polysulfide (Note the number next to the B reflects the working time of the sealant)	PR-1733 B-1/2 B-1/2 B-2	 8030-01-418-5415 8030-01-418-5418 8030-01-418-5415	 SC SC SC
Sealing Compound, Self Leveling TM For filling voids/cavities on horizontal surfaces where water collects	HT3326-5-50	8030-01-494-9650	CA
Sealing Compound, Thioflex™ Orange Polyurethane Sealant For fill ing voids/cavities on vertical and over-head surfaces	PN TF2219	8030-01-494-7677	CA
Sealing Compound, PN DC-111		6850-00-294-0860	EA
Sealant, Low Adhesion and Corrosion Inhibiting	AMS 3267/PR1403G Class B-2 (Paste)	 8030-01-104-5396	 KT
Sealant, MIL-PRF-81733		8030-00-008-7205	TU
Sealant, AMS-S-8802	Fuel Cell Use Only	8030-00-723-5344	TU
Sealant Removal System, Aerowing Rapid Desealing System (RDS) (Includes: 0.5” removal tip (Pack of 10), 2” Shaft, Shaft removal Tool, Operator’s Manual)	RDS001, CAGE Code #3FM31	6635-01-572-5251	EA

Table A-1. Equipment and Consumable Materials List - Continued

Solvent, Dry Cleaning (CID A-A-59601)	MIL-PRF-680, Type II	6850-00-110-4498	PT
		6850-00-637-6135	GL
		6850-00-274-5421	CN
		6850-00-285-8011	DR
	MIL-PRF-680 Type III	6850-01-331-3349	CN
		6850-01-331-3350	DR
(As an alternate method) use a (5PC-local purchase) 3m Rubber wheel, part number 07498 for removing vinyl reflectors and vinyl stencils from equipment.			
Spray Kit, Preval with Compressed Gas Canister and Glass Bottle	267-1	8020-01-501-3127	EA
Spray Kit, Preval Spray Compressed Gas Canister	268-1	8020-01-496-2473	EA
Tape Pressure Sensitive	SAE-AMS-T-23397, Type II		
	1/2 -inch	7510-00-476-8841	RO
	1-inch	7510-00-473-9855	RO
	2-inch	7510-00-473-9513	RO

NOTE

- SEMPENs are approved for touch-up on polyurethane surfaces. Respirator use is not normally required; however, organizations shall gain approval from the local bioenvironmental engineer prior to using the SEMPEN without a paint respirator.
- Preval Spray System/Power Pack Spray Systems are atomizing paint touchup spray systems. PPE shall be worn when spraying polyurethane and epoxy primer.
- Single component aerosols are not authorized for use on any SE.