NAVAIR 01-1A-509-3
TM 1-1500-344-23-3
TO 1-1-689-3

TECHNICAL MANUAL

CLEANING AND CORROSION CONTROL

VOLUME III
AVIONICS AND ELECTRONICS

DISTRIBUTION STATEMENT A. Approved for public release; distribution is unlimited.

DESTRUCTION NOTICE - For unclassified, limited documents, destroy by any method that will prevent disclosure of contents or reconstruction of the document.

PUBLISHED BY DIRECTION OF COMMANDER, NAVAL AIR SYSTEMS COMMAND

0801LP1084535

01 MARCH 2005

Change 1 - 15 July 2008

LIST OF EFFECTIVE PAGES

Dates of issue for original and changed pages are:

Original ..... 0 ..... 01 Mar 2005
Change ..... 1 ..... 15 July 2008

Insert latest changed pages; dispose of superseded pages in accordance with applicable regulations.

NOTE: On a changed page, the portion of the text affected by the latest change is indicated be a vertical line, or other change symbol in the outer margin of the page. Change in illustrations are indicated by miniature pointing hands. Changes to wiring diagrams are indicated by shaded areas.

Total number of pages in this manual is 146, consisting of the following:

Page No.	*Change No.	Page No.	*Change No.	Page No.	*Change No.
Title	1				
A	1				
i-iii	0				
iv Blank	0				
TPDR-1	1				
TPDR-2 Blank	0				
HMWS-1 - HMWS-5	0				
HMWS-6	1				
1-1 - 1-6	0				
2-1 - 2-25	0				
2-26 Blank	0				
3-1 - 3-5	0				
3-6 Blank	0				
4-1 - 4-2	0				
5-1 - 5-4	1				
5-5 - 5-7	0				
5-8 Blank	0				
6-1 - 6-7	0				
6-8	1				
6-9 - 6-29	0				
6-30 - 6-31	1				
6-32 - 6-42	0				
7-1 - 7-8	0				
8-1 - 8-12	0				
9-1 - 9-6	0				
10-1 - 10-15	0				
10-16 Blank	0				

*Zero in this column indicates an original page.

NOTICE

NOTICE

NAVAIR 01-1A-509-3
TM 1-1500-344-23-3
TO 1-1-689-3

16 JULY 2008

NAVAIR 01-1A-509-3, TM 1-1500-344-23-3, TO 1-1-689-3, DATED 01 MARCH 2005, CHANGE 1 - 15 JULY 2008, HAS INCORRECT NSN ON THE TITLE PAGE. REMOVE AND DISCARD PREVIOUSLY PROVIDED TITLE PAGE AND REPLACE WITH THE ATTACHED PAGE.

PLACE THIS NOTICE SHEET BEHIND TITLE PAGE AFTER INCORPORATION.

NOTICE

NOTICE

TABLE OF CONTENTS

Chapter Page

LIST OF ILLUSTRATIONS ii
LIST OF TABLES iii
LIST OF TECHNICAL PUBLICATIONS DEFICIENCY REPORTS (TPDR) INCORPORATED TPDR-1
WARNINGS APPLICABLE TO HAZARDOUS MATERIALS HMWS-1

1 INTRODUCTION

1-1. General 1-1
1-2. Purpose 1-1
1-3. Scope 1-1
1-4. Arrangement of Manual 1-1
1-5. Related Publications 1-1
1-6. Consumables and Equipment 1-1

2 CLEANING AND LUBRICATION

2-1. General 2-1
2-2. Avionic Corrosion Cleaning Facility 2-1
2-3. Materials and Support Equipment Requirements 2-4
2-4. Cleaning Tracks 2-4
2-5. Cleaning Materials, Equipment, and Techniques 2-13
2-6. Drying Equipment and Procedures 2-23
2-7. Lubricants 2-25

3 INSPECTION AND CORROSION PRONE AREAS

3-1. Corrosion Prone Areas 3-1
3-2. Inspection Process 3-3

4 CORROSION REMOVAL

4-1. General 4-1
4-2. Corrosion Removal Materials and Equipment 4-1

5 SURFACE TREATMENT

5-1. Purpose 5-1
5-2. Chemical Conversion Coatings 5-1
5-3. Protective Coatings 5-2
5-4. Encapsulants 5-3
5-5. Sealants for Avionics 5-7

6 TREATMENTOF SPECIFIC AREAS

6-1. General 6-1
6-2. Repair of Avionic Equipment Housing, Mounting, and Storage Hardware 6-1
6-3. Repair of Avionic Systems, Equipment, and Components 6-8
6-4. Electrical Bonding/Grounding Connections 6-36
6-5. Bonding/Grounding Surface Preparation 6-37

7 ELECTROMAGNETIC INTERFERENCE (EMI) SHIELDING

7-1. Overview 7-1
7-2. Factors Influencing EMI 7-1
7-3. Sources of Avionic EMI 7-1
7-4. EMI Shielding 7-3
7-5. Effects of Corrosion 7-5
7-6. Prevention, Treatment, and Control of Corrosion on EMI Shielding 7-6
7-7. EMI Packaging Requirements 7-8

8 ELECTROSTATIC DISCHARGE (ESD)

8-1. Overview 8-1
8-2. Factors Influencing ESD 8-1
8-3. Sources of Avionic ESD 8-1
8-4. Types of ESD Failures 8-4
8-5. Failure Mechanisms 8-5
8-6. Identification of ESD Materials 8-5
8-7. Dissipation of Static Charges 8-6
8-8. Effects of Corrosion 8-6
8-9. Recommended Practices for ESD Equipment, Modules, and Components 8-8
8-10. Prevention, Treatment, and Control of Corrosion on ESD Sensitive Equipment 8-11

9 PRESERVATION AND PACKAGING

9-1. Purpose 9-1
9-2. Preservatives 9-1

TABLE OF CONTENTS (Cont.)

Chapter Page

9-3. Packaging, Handling, and Storage 9-4

10 EMERGENCY PROCEDURES

10-1. General 10-1
10-2. Emergency Reclamation Team 10-1
10-3. Emergency Preparations 10-1
10-4. Emergency Cleaning Procedures 10-2
10-5. Emergency Drying and Preservation 10-7
10-6. Organizational/Unit Level Emergency Cleaning Procedures 10-9
10-7. Intermediate Level Emergency Cleaning Procedures 10-14

LIST OF ILLUSTRATIONS

Figure Title Page

2-1. Typical Avionic Cleaning Facility 2-2
2-2. Typical Track 8 Equipment Layout 2-3
2-3. Cleaning Track Diagram 2-5
2-4. Portable Washer (CTM4) 2-11
2-5. Hazardous Chemical or Material Identification Label 2-16

3-1. Corrosion Caused by Blown Capacitor Acid 3-3
3-2. Frequency Test Set Corroded While in Storage 3-3

6-1. Nonmetallic Sealant Removal Tool 6-9
6-2. Paint Line After Application of Primer and Topcoat 6-10
6-3. Removal of Release Film From Gasket 6-11
6-4. Application of Self-Leveling Green Sealant 6-11
6-5. Stretch Seal Protective Wrap Applied to Antenna Connector 6-11
6-6. Typical Gel Squeeze-Out Around Perimeter of Antenna 6-12
6-7. Connector Sealing Procedures 6-32
6-8. Stud Bonding or Grounding to Flat Surface 6-38
6-9. Nut Plate Bonding or Grounding to Flat Surface 6-39
6-10. Bolt and Nut Bonding or Grounding to Flat Surface 6-40
6-11. Copper Jumper Connector to Tubular Structure 6-41
6-12. Bonding Conduit to Structure 6-41
6-13. Aluminum Jumper Connector to Tubular Structure 6-41

7-1. Basic EMI Shield 7-4
7-2. Classification of EMI Problems 7-5

8-1. Triboelectric Series (Partial) 8-2
8-2. Graph of Human Body Generated Charge versus Activity 8-3
8-3. Graph of Human Charged Voltage versus Bleed-Off Time at Varying Humidities 8-3
8-4. Examples of Typical Markings on ESD Sensitive Item Package 8-6
8-5. Dissipation of Static Charges 8-8
8-6. Typical ESD Protective Packaging Worksttion 8-9

LIST OF TABLES

Table	Title	Page
1-1.	Outline of Volume III	1-2
1-2.	Related Navy Publications	1-3
1-3.	Related Air Force Publications	1-4
1-4.	Related Army Publications	1-6
1-5.	Other Related Publications	1-6
2-1.	Types of Contamination versus Cleaning Tracks	2-6
2-2.	Recommended Cleaning Process versus Type of Avionic Equipment	2-7
2-3.	Cleaning Track Legend	2-8
2-4.	Avionic Cleaning Materials	2-14
2-5.	Cleaning and Drying Restrictions	2-20
3-1.	Effects of Corrosion on Avionic Equipment	3-2
5-1.	Corrosive Silicone Sealants, Adhesives, and Coatings	5-7
6-1.	Hardware for Stud Bonding or Grounding to Flat Surface	6-38
6-2.	Hardware for Nut Plate Bonding or Grounding to Flat Surface	6-39
6-3.	Hardware for Bolt and Nut Bonding or Grounding to Flat Surface	6-40
7-1.	Military Aircraft Electromagnetic Threat Comparison	7-2
7-2.	Shielding Effectiveness vs. Percent Leakage	7-4
7-3.	Materials Used in EMI Joints	7-5
8-1.	Typical Prime Charge Sources	8-4
8-2.	Typical Electrostatic Charge	8-4
8-3.	ESD Effect of Various Solvents	8-5
8-4.	ESD Sensitivity Categories	8-7
9-1.	Preservative Compounds for Avionic Equipment	9-3

THIS PAGE LEFT INTENTIONALLY BLANK

LIST OF TECHNICAL PUBLICATIONS DEFICIENCY REPORTS INCORPORATED

Report Control Number (RCN)	Location
USS Carl Vinson	
20993 2001 AO70	Pg 10-3, 10-5, 10-7
AIMD NAF Atsugi Japan	
44323 2002 0013	Pg D-1 - D-6
44323 2002 0014	Pg 2-7
NATEC Det New Orleans	
30338 2002 N068	Pg 4-25
30338 2002 N071	Pg 4-9, 6-9, 6-28, 7-11
30338 2002 N072	Pg Various
30338 2003 N005	Pg 7-11
30338 2003 N008	Pg 6-31

Report Control Number (RCN)	Location
AIMD Sigonella Italy	
44330 2003 0103	Pg 5-2
VQ-1	
09930 2005 008	Pg 7-5
NAWCADPAXRIVER	
00421 2005 A126	Pg Various
NADEP NORIS	Pg 6-8
65888 2008 0836	

THIS PAGE LEFT INTENTIONALLY BLANK

WARNINGS APPLICABLE TO HAZARDOUS MATERIALS

1. Warnings and cautions for hazardous materials listed are designed to apprise personnel of hazards associated with such items when they come in contact with them by actual use. Additional information related to hazardous materials is provided in Navy Hazardous Material Control Program NAVSUPPINST 5100.27, Navy Occupational Safety and Health (NAVOSH) Program Manuals, OPNAVINST 5100.23 (Ashore) and OPNAVINST 5100.19 (Afloat) and the DOD 6050.5 Hazardous Materials Information System (HMIS) series publications. For each hazardous material used, a Material Safety Data Sheet (MSDS) must be provided and available for review by users. Consult your local safety and health staff concerning any questions regarding hazardous materials, MSDS, personal protective equipment requirements, appropriate handling and emergency procedures and disposal guidance.

2. Under the heading HAZARDOUS MATERIALS WARNINGS, complete warnings, including related icon(s) and a numeric identifier, are provided for hazardous materials used in this manual. The numeric identifiers have been assigned to the hazardous material in the order of their appearance in this manual. Each hazardous material is assigned only one numerical identifier. Repeat use of a specific hazardous material references the numeric identifier assigned at its initial appearance. The approved icons and their application are shown in paragraph 4.

3. In the text of the manual, the caption WARNING is not used for hazardous material warnings. Hazards are cited with appropriate icon(s), the nomenclature of the hazardous material and the numeric identifier that relates to the complete warning. Users of hazardous materials shall refer to the complete warnings, as necessary.

4. EXPLANATION OF HAZARDOUS MATERIALS ICONS.

Chemical

The symbol of a liquid dripping onto a hand shows that the material will cause burns or irritation to human skin or tissue.

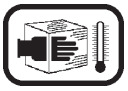

Cryogenic

The symbol of a hand in a block of ice shows that the material is extremely cold and can injure human skin or tissue.

Explosion

This rapidly expanding symbol shows that the material may explode if subjected to high temperature, sources of ignition or high pressure.

Eye Protection

The symbol of a person wearing goggles shows that the material will injure the eyes.

Fire

The symbol of a fire shows that the material may ignite or overheat and cause burns.

Poison

The symbol of a skull and crossbones shows that the material is poisonous or is a danger to life.

Vapor

The symbol of a human figure in a cloud shows that material vapors present a danger to life or health.

HAZARDOUS MATERIALS WARNINGS

INDEX	MATERIAL	WARNING
1	Adhesive/Sealant, Silicone RTV, Non-Corrosive, MIL-A-46146 Group 1 Type I/II or Group II Type 1	Non-corrosive, silicone RTV adhesive/sealant MIL-A-46146 Group I Type I/II or Group II Type I is flammable and a skin and eye irritant. Avoid contact with skin and eyes. Use in well ventilated area and avoid prolonged breathing of vapors. Avoid contact with oxidizing materials. Store below 90° F. Wash hands before eating and at end of work shift. Protection: rubber gloves, chemical goggles, and protective skin compound; half-mask respirator with organic vapor cartridge required in poorly ventilated areas.
2	Sealing and Coating Compound, Corrosion Inhibitive, MIL-PRF-81733 Class Optional	Sealing and coating compound corrosion inhibitive, MIL-PRF-81733 is toxic and flammable. Avoid prolonged breathing of vapors and prolonged or repeated skin contact. Keep away from heat, sparks, and open flame. Use with adequate ventilation to prevent vapor buildup. Protection: rubber gloves, chemical goggles and protective skin compound.
3	Compound, Corrosion Preventive, Water-Displacing MIL-C-81309 Type II or Type III	Water displacing, corrosion preventive compound, MIL-C-81309 Type II or III is toxic and flammable. Avoid contact with skin and eyes. Avoid breathing vapors. Keep away from heat, sparks and flame. Vapor accumulations may explode if ignited. Protection: rubber gloves and chemical goggles, faceshield and laboratory apron required when working with large quantities; half-mask respirator with acid/organic vapor cartridge and mist prefilter required during spraying operations or in poorly ventilated areas.
4	Compound, Aircraft Cleaning, MIL-PRF-85570 Type II	Aircraft cleaning compound, MIL-PRF-85570 Type II is a skin and eye irritant. Avoid contact with skin and eyes. Wash hands and face after using. Avoid breathing vapors. Launder contaminated clothing before re-use. Store in cool, dry, well-ventilated and low fire risk area. Protect from heat, shock and friction. Keep containers closed when not in use. Avoid contact with strong acids or oxidizing agents. Protection: rubber gloves, chemical goggles, face-shield and protective clothing; half-mask respirator with organic vapor cartridge required in poorly ventilated areas.
5	Detergent, Non-Ionic, MIL-D-16791 Type I	Non-ionic detergent, MIL-D-16791 Type I is a skin and eye irritant. Avoid contact with skin and eyes. Store away from heat sources. Avoid contact with strong oxidizing or reducing agents. Material is corrosive to copper and brass in long term storage. Protection: rubber gloves and chemical goggles.
6	Alcohol, Isopropyl TT-I-735 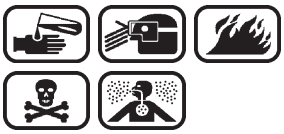	Isopropyl alcohol, TT-I-735, is toxic and flammable. Avoid contact with skin and eyes. Use in a well ventilated area and avoid breathing vapors. May be fatal if swallowed. Keep away from heat, sparks and flame. Store in clean, cool, well-ventilated area away from ignition sources and oxidizing agents. Keep containers tightly closed when not in use. Protection: neoprene gloves and chemical goggles; faceshield and protective clothing required when splashing is possible or expected; half-mask respirator with organic vapor cartridge required in poorly ventilated areas.

HAZARDOUS MATERIALS WARNINGS (Cont.)

INDEX	MATERIAL	WARNING
7	Degreasing Solvent, MIL-PRF-680 Type III	Degreasing solvent, MIL-PRF-680 Type III is toxic and flammable. Avoid contact with skin and eyes. Avoid breathing vapors. Use with adequate ventilation. Keep away from heat, sparks and flame. Avoid contact with strong oxidizing agents. Protection: neoprene gloves and chemical goggles; faceshield and protective clothing required when splashing is possible or expected; half-mask respirator with organic vapor cartridge required in poorly ventilated areas.
8	Compound, Corrosion Preventive, MIL-PRF-16173 Grade Optional	Corrosion preventive compound, MIL-PRF-16173 Grade Optional is toxic and flammable. Avoid contact with skin and eyes. Avoid breathing vapors. Store in sealed containers away from heat, sparks and flame. Avoid contact with oxidizing agents. Protection: rubber gloves, chemical goggles and laboratory apron; faceshield required when pouring large quantities; half-mask respirator with acid/ organic vapor cartridge and mist pre-filter required during spray operations or in poorly ventilated areas.
9	Silver Nitrate, A-A-59282	Silver nitrate, A-A-59282, is toxic and flammable. Avoid contact with skin and eyes. Wash hands thoroughly before eating, drinking or smoking. Store away from light, combustibles, organic/other readily oxidizable materials. Protection: rubber gloves, dust resistant safety goggles, appropriate protective clothing and a respirator for conditions where exposure to dust or fumes is apparent.
10	Coating, Chemical Conversion, MIL-DTL-81706 Class 1A Form III ; Class 1A Form V; or Class 3 Form III	Chemical conversion coating MIL-DTL-81706 Class 1A Form III, Class 1A Form V, or Class 3 Form III, is toxic and flammable. Avoid contact with skin and eyes. Avoid breathing vapors; upper respirator tract irritation or damage may occur. May be harmful or fatal if swallowed. Contains chromic acid, a systemic poison, which may aggravate pre-existing conditions. Wash hands and face with soap and water after use and before smoking or eating. Immediately remove contaminated clothing and launder before re-use. Avoid humidity, strong acids, alkalies, reducing compounds, flammable or combustible materials. Store in a dry area in tightly closed containers. Store away from oils, greases, and corrosives. When mixing: add slowly to water while mixing. Protection: rubber gloves, chemical goggles, faceshield, and laboratory apron; dust mask required when mixing MIL-DTL-81706 Class 1A Form V; halfmask respirator with acid/organic vapor cartridge and mist pre-filter is required during spray operations in poorly ventilated areas.
11	Magnesium Alloy, Processes For Pretreatment and Prevention Of Corrosion On, SAE-AMS-M-3171	Chemical conversion material, SAE-AMS-M-3171, is toxic and flammable. Avoid contact with skin and eyes. Avoid breathing fumes. Store in dry, cool but above freezing temperature area away from acids and organic compounds. Recommended local exhaust. Protection: chemical resistant gloves/rubber, chemical safety goggles with side shield, chemically resistant coveralls, hat and shoes; halfmask respirator with organic vapor cartridges and mist pre-filter required in poorly ventilated areas.

HAZARDOUS MATERIALS WARNINGS (Cont.)

INDEX	MATERIAL	WARNING
12	Coating Aliphatic, Polyurethane, Chemical Agent Resistant, MIL-C-46168	Aliphatic polyurethane coating, chemical agent resistant, MIL-C-46168, is toxic and flammable. Avoid contact with skin and eyes. Avoid breathing vapors. Avoid storing near high temperature or ignition sources. Store in well-ventilated area. Protection: splash/side guards, goggles, faceshield. Protective clothing (use of long sleeve and long leg clothing) and respirator protection for air purifying or fresh air supplied respirator for organic vapor environment.
13	Primer Coatings, Epoxy Waterborne, MIL-PRF-85582 Type I/II Class Opt	Waterborne epoxy primer coating MIL-PRF-85582 Type I/II Class optional, is toxic and flammable. Avoid prolonged or repeated breathing of vapors. Wash hands before eating, smoking or using washroom. Wash contaminated clothing before re-use. Keep away from heat, sparks and flame. Store only in ventilated areas. Protection: full face-piece continuous-flow supplied air respirator, neoprene gloves, chemical goggles, faceshield and protective skin compound; protective clothing required during spraying operations.
14	Coating, Epoxy, High Solids, MIL-PRF-22750	VOC-compliant epoxy coating, MIL-PRF-22750, is toxic and flammable. Avoid prolonged or repeated skin contact. Avoid contact with eyes; produces severe eye irritation. Use with adequate ventilation. Keep away from heat, sparks and flame. Avoid contact with strong oxidizing agents. Vapors may form explosive mixtures with air. Protection: neoprene gloves, chemical goggles, faceshield and protective skin compound; protective clothing and half-mask respirator with organic vapor cartridge and paint mist pre-filter are required during spray operations; full face-piece continuous-flow supplied air respirator required in poorly ventilated areas.
15	Primer Coatings, Epoxy, Chemical And Solvent Resistant, MIL-PRF-23377 Type I/II Class Opt	Chemical and solvent resistant epoxy primer coatings, MIL-PRF-23377, Type I/II, Class optional, is toxic and flammable. Prevent prolonged or repeated breathing of vapors or spray mist. May cause allergic reaction. Avoid contact with skin and eyes. Store tightly closed in a cool, dry, well ventilated area. Launder contaminated clothing before reuse. Protection: full face-piece continuous-flow supplied air respirator, neoprene gloves, chemical goggles, faceshield and protective skin compound; protective clothing required during spraying operations.
16	Coating, Aircraft Touchup (White 17875) MIL-PRF-81352	Coating, Aircraft touchup, MIL-PRF-81352, is toxic and flammable. Avoid contact with skin and eyes. Avoid breathing vapors. Avoid oxidizing agents, heat sparks, open flames and contact with hot liquids. Store in cool, dry, vented area. Protection: heavy duty neoprene gloves, safety glasses side/shield goggles, resistant protective garment. Ventilate area to keep exposure below current exposure limits.
17	Coating, Aircraft Touchup, (Black 37038) MIL-PRF-81352	Coating, Aircraft touchup, MIL-PRF-81352, is toxic and flammable. Avoid contact with skin and eyes. Avoid breathing vapors. Avoid oxidizing agents, heat, sparks, open flames and contact with hot liquids. Store in cool, dry, vented area. Protection: heavy duty neoprene gloves, safety glasses, side/shield goggles, resistant protective garment. Ventilate area to keep exposure below current exposure limits.

HAZARDOUS MATERIALS WARNINGS (Cont.)

INDEX	MATERIAL	WARNING
18	Thinner, Aircraft Coating, MIL-T-81772 Type I, II or III	Aircraft coating thinner, MIL-T-81772, is toxic and flammable. Avoid prolonged breathing of vapors. Use adequate ventilation. Avoid contact with skin. Store in cool, dry, well-ventilated area. Keep away from heat, sparks and flame. Do not apply to hot surfaces. Avoid contact with oxidizing agents, corrosives, and peroxides. Protection: neoprene gloves and chemical goggles.
19	Sealing Compound, MIL-PRF-8516 Type II	Sealing compound, MIL-PRF-8516 Type II, is toxic. Avoid contact with skin and eyes. Avoid breathing vapors. Wash hands thoroughly after each use; do not smoke, eat, or drink in work area. Keep away from heat and flames. Protection: rubber gloves, chemical goggles and protective skin compound.
20	Oil, Lubricating, General Purpose, MIL-PRF-32033 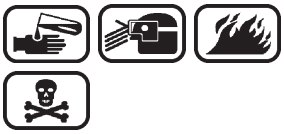	General purpose lubricating oil, MIL-PRF-32033, is toxic and flammable. Avoid contact with skin or eyes. Keep away from heat, sparks and flame. Do not reuse containers. Protection: rubber gloves and chemical goggles.
21	Cleaning Compound, Lubricating, MIL-PRF-29608 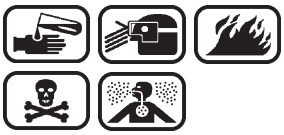	Cleaning-Lubricating compound, MIL-PRF-29608, is toxic to skin, eyes and respiratory tract and is flammable. Use in a well-ventilated area and avoid breathing vapors. Store in cool, dry place away from heat/sparks/flames. Keep container closed when not in use. Wear positive pressure air-supplied respirator in situations where there may be potential for airborne exposure. Protection: rubber gloves, safety glasses/goggles with side shield, full faceshield.
22	Ammonium Hydroxide, A-A-59370 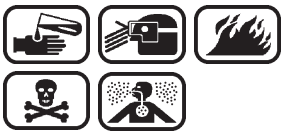	Ammonium Hydroxide, A-A-59370, is highly toxic to eyes, skin, and respiratory tract. Avoid contact with strong oxidants. Use in well-ventilated area. Keep away from heat, sparks and flames. Protection: rubber gloves, chemical splash goggles, lab coat and boots. Respiratory protection: chemical cartridge respiratory with ammonium cartridge or use a self-contained breathing apparatus for high-concentrated areas.
23	Damping Fluid, VV-D-1078 Grade 100/100k Cs	Damping fluid, VV-D-1078, Grade 100/100K cs, is an eye irritant. Avoid contact with skin and eyes. Wash hands thoroughly after each use. Protection: rubber gloves and chemical goggles.
24	Remover, Paint, MIL-R-81294 Type I/II	Paint remover, MIL-R-81294 Type I/II, is corrosive. Avoid contact with skin and eyes. Avoid breathing vapors. Keep away from heat, flames and strong oxidizing agents and alkalies. Protection: neoprene gloves, chemical goggles, faceshield, and laboratory apron; full face-piece continuous-flow supplied air respirator required in poorly ventilated areas.

HAZARDOUS MATERIALS WARNINGS (Cont.)

INDEX	MATERIAL	WARNING
25		Deleted
26	Compound, Corrosion Preventive MIL-DTL-85054 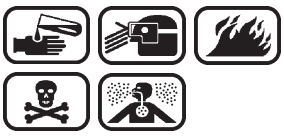	Corrosion Preventive Compound, MIL-DTL-85054, is toxic, flammable, and a respiratory tract irritant. Avoid contact with skin and eyes. **DO NOT** use near open flame, sparks, or heat. Use only in well-ventilated areas and avoid breathing vapor. Wash hands thoroughly with soap and water after use. Keep container tightly closed when not in use. Protection: wear rubber gloves and chemical goggles. If eye contact occurs, flush immediately with large amounts of water for 15 minutes and seek medical attention. If skin contact occurs, wash with soap and water, remove contaminated clothing and shoes. If ingested, do not induce vomiting, seek medical attention. If inhalation occurs, remove from area to fresh air.

CHAPTER 1
INTRODUCTION

This volume was prepared under the technical cognizance of the Chemistry and Materials Division, NAVAIR China Lake, China Lake, California.

1-1. GENERAL.

1-1.1. Today's military avionic systems assume a significant share of the responsibility for mission completion, performance capability, and overall system safety. The role of avionics includes mission essential equipment, flight critical equipment, and aircraft hardware. For example, navigation, communications, electronic warfare, weapon management, flight/engine controls and displays, and wiring are all considered avionics. Electronics and electrical power systems are also considered avionics. The reliability of these complex systems in any environment is critical for aircraft flight and mission essential functions.

NOTE

In this manual, use of the term "avionic systems" shall refer to any device that uses electrical power. The term "avionic technician" shall include the aviation electrician, aviation electronic technician, or any personnel authorized to perform maintenance on avionic systems.

1-1.2. Corrosion is a major cause of avionic equipment failures, particularly while installed in military aircraft. In many cases, even minute amounts of corrosion can cause intermittent malfunction or complete failure of the equipment. Past experience shows that in order to obtain certain electrical characteristics, for example, low electromagnetic interference (EMI), a compromise in the design selection of materials might be needed (for example, the use of conductive adhesive). Sometimes such compromises can lead to corrosion problems that are aggravated by exposure to varying environmental conditions (for example, EMI corrosion). Avionic equipment is routinely exposed to varying environmental conditions. These conditions include changing temperatures and pressures, varying humidity, dust, dirt, and industrial pollutants in the atmosphere that often initiate corrosion.

1-1.3. The types of corrosion that occur on avionic equipment are similar to those found on airframe structures. The difference between avionic and airframe corrosion is that small amounts of corrosion in avionic equipment can cause intermittent malfunction or complete failure, while it may not impact airframe structures.

1-2. PURPOSE. The purpose of this manual is to provide information on materials and procedures to prevent, control, and repair corrosion damage to avionics on land or at sea.

1-3. SCOPE. The material in this manual contains basic avionic corrosion prevention and corrective maintenance information to be used at the Organizational/Unit and Intermediate levels.

1-4. ARRANGEMENT OF MANUAL.

1-4-1. A complete set of manuals to perform avionics and electronics cleaning and corrosion control functions consists of Volumes I, III, and IV (Navy and Army) or Volumes I, III, and V (Air Force).

1-4.2 Arrangement of Volume III. Volume III consists of ten chapters, arranged as shown in Table 1-1.

1-5. RELATED PUBLICATIONS. Tables 1-2 (Navy), 1-3 (Air Force), 1-4 (Army), and 1-5 (Other) list technical publications that may be used as supplemental references by personnel involved in cleaning and corrosion control.

1-6. CONSUMABLES AND EQUIPMENT. Procurement information for ordering consumables and equipment referenced in this volume may be found in Volume IV (Navy and Army) or Volume V (Air Force) of this manual.

Table 1-1. Outline of Volume III

CHAPTER	TITLE	BRIEF DESCRIPTION
1	Introduction	This chapter presents the scope and layout of this volume.
2	Cleaning and Lubrication	This chapter describes the materials, equipment and techniques to assist the avionic technician in the mechanical cleaning and lubrication of avionic equipment at the Organizational/Unit and Intermediate maintenance levels.
3	Inspection and Corrosion Prone Areas	This chapter explains how to recognize corrosion, and lists the components most affected by corrosion.
4	Corrosion Removal	This chapter outlines the approved methods for the removal of corrosion damage.
5	Surface Treatment	This chapter outlines the established methods for the application of sealants, and the particular application of treatments and coatings that can be applied to various external and internal avionic equipment. This chapter describes the particular application of treatments and coatings that can be applied to various external and internal avionic equipment.
6	Treatment of Specific Areas	This chapter describes the materials and techniques for removing corrosion from various types of avionic equipment, and describes the best hardware and techniques to be used when repairing or replacing existing bonding or grounding connections.
7	Electromagnetic Interference (EMI) Shielding	This chapter describes the electromagnetic environment in which military avionics operate. It reviews protection measures and techniques used to minimize electromagnetic interference.
8	Electrostatic Discharge (ESD)	This chapter describes the basic theory surrounding electrostatic discharge, and outlines some methods currently available to keep ESD from occurring.
9	Preservation and Packaging	This chapter describes the materials, equipment and techniques to assist the avionic technician in the preservation and packaging of avionic equipment at the Organizational/Unit and Intermediate maintenance levels.
10	Emergency Procedures	This chapter outlines emergency procedures to be followed after avionic equipment has been exposed to salt water, water immersion, or fire extinguishing agents.

Table 1-2. Related Navy Publications

NUMBER	TITLE
NA 00-80R-14	NATOPS U.S. Navy Aircraft Firefighting and Rescue Manual
NA 01-1A-1	Structural Repair, General Manual and Engineering Handbook for Aircraft Repair
NA 01-1A-8	Engineering Manual Series Aircraft and Missile Repair Structural Hardware
NA 01-1A-16	Nondestructive Inspection Methods Technical Manual
NA 01-1A-17	Aviation Hydraulics Manual, Organizational/Intermediate/Depot Levels
NA 01-1A-22	Radomes and Antenna Covers, Aircraft, Organizational, Intermediate and Depot Maintenance
NA 01-1A-23	Standard Maintenance Practices for Miniature/microminiaturize (2M) Electronic Assembly Repair, Organizational/Intermediate Level
NA 01-1A-35	Aircraft Fuel Cells and Internal/External Tanks, Organizational, Intermediate, and Depot Maintenance Instructions
NA 01-1A-505	Installation Practices for Aircraft Electric and Electronic Wiring
NA 01-1A-507	Cements, Sealants, and Coatings, General Use of,Technical Manual
NA 01-1A-520	Anti-icing, De-icing and Defrosting of Parked Aircraft
NA 13-1-6.5	Rescue and Survival Equipment, Aviation Crew System, Manual for
NA 15-01-4	Desert Storage Preservation and Process Manual for Aircraft
NA 15-01-500	Preservation of Naval Aircraft, Organizational, Intermediate and Depot Maintenance
NA 17-1-125	Support Equipment Cleaning, Preservation, and CorrosionControl, Maintenance Instructions, Organizational and Intermediate Levels
NA 17-15BAD-1	Operation and Maintenance Instructions With Illustrated Parts Breakdown Navy and Air Force Aircraft and Aircraft Support Equipment Storage Batteries
NA 17-5BM-1	Handbook Operation, Service, and Overhaul Instructions With Illustrated Parts Breakdown Portable Dry Honing Machine Part No. 41303 (VACU-BLAST) N00600-72-D-0414
NA 17-5BM-3	Organizational, Intermediate and Depot Maintenance With Illustrated Parts Breakdown Honing Machine C-150-6 AND C-150-7 ZERO MANUFACTURING COMPANY N00383-72-C-0636
NA 17-600-22-6-1	Dry Honing Machine (Zero/Vacu-Blast), Portable Preoperational Checklist
NA 17-600-22-6-2	Dry Honing Machine (Zero/Vacu-Blast), Portable Periodic Maintenance Requirements
NA 19-20D-1	Jet Engine Corrosion Control, Operational Service Instructions with Illustrated Parts Breakdown. Cart Part No. 65A102-J1-1
NA 19-20D-2	Spray Unit, Corrosion Control, Trailer Mounted, Operation and Intermediate Maintenance Part No. 76E04000-30A
NA 19-25E-508	Operation and Intermediate Maintenance Instructions With Illustrated Parts Breakdown Aircraft Deicer, Truck Mounted A/S32M-16 Part Number D40-D
NA A1-NAOSH-SAF-000	NAVAIROSH Requirements for the Shore Establishment
NAVFAC P-80	Navy & Marine Corps Shore Installations, Facility Planning Factor Criteria
NAVFAC P-272	Naval Shore Facilities, Definitive Design for
NAVSUP 4105 LIRSH -	List of Items Requiring Special Handling
OPNAVINST 4790.2	Naval Aviation Maintenance Program (NAMP)
OPNAVINST 5100.23	Navy Occupational Safety and Health (NAVOSH) Program

Table 1-3. Related Air Force Publications

NUMBER	TITLE
AFI 32-7042	Solid and Hazardous Waste Compliance
AFOSH 91-66	General Industrial Operations
AFOSH 48-137	Respiratory Protection Program
AFP 85-14	Commanders Facility Improvement Guide
AFI 32-1067	Water Systems
AFI 21-105	Air and Space Equipment Structural Maintenance
TO 00-5-1	AF Technical Order System
TO 00-20-1	Aerospace Equipment Maintenance Inspection, Documentation, Policies, and Procedures
TO 00-20-2	The Maintenance Data Documentation
TO 00-25-107	Maintenance Assistance
D086	Mission Workload Assignment System
TO 00-25-172	Ground Servicing of Aircraft and Static Grounding /Bonding
TO 00-25-203	Contamination Control of Aerospace Facilities, US Air Force
TO 00-25-234	General Shop Practice Requirements for the Repair, Maintenance, and Test of Electrical Equipment
TO 00-35D-54	USAF Material Deficiency Reporting and Investigating Services
TO 00-85-3	Protective Packaging and Preservation Packing - General
TO 00-110A-1	Guidelines for Identification and Handling of Aircraft and Material Contaminated and Radioactive Debris (Fallout)
TO 1-1-3	Inspection and Repair of Aircraft Integral Tanks, and Fuel Cells
TO 1-1-8	Application and Removal of Organic Coatings, Aerospace and Non-Aerospace Equipment

Table 1-3. Related Air Force Publications (Cont.)

NUMBER	TITLE
TO 1-1-17	Storage of Aircraft and Missile Systems
TO 1-1-24	Maintenance Repair and Electrical Requirements for Fiberglass Airborne Radomes
TO 1-1-686	Desert Storage Preservation and Process Manual of Aircraft
TO 1-1-691	Cleaning and Corrosion Prvention and Control, Aerospace and Non-Aerospace Equipment
TO 1-1A-8	Engineering Manual Series for Aircraft and Missiles Repair Structural Hardware
TO 1-1A-9	Engineering Series for Aircraft Repair Aerospace Metal General Data and Usage Factors
TO 1-1A-14	Installation Practices for Aircraft Electric and Electronic Wiring
TO 5-1-17	Corrosion Control and Treatment of Aircraft Instruments
TO 10-1-179	Corrosion Control Manual for Photographic Equipment
TO 31-1-221	Field Instructions for Painting and Preserving Electronics Command Equipment
TO 33B-1-1	Nondestructive Inspection Methods
TO 42A1-1-1	Evaluation and Service Testing of Materials - Cleaning, Painting, Sealing, Protective Treating, Anti-Corrosion, Inspection Materials, and Related Items
TO 42A3-1-2	General Use of Cements, Sealants, and Coatings
TO 42B-1-6	Corrosion Preventive Lubricants and Anti-Seize Compounds
TO 42C-1-2	Anti-Icing, De-Icing, and Defrosting of Parked Aircraft
TO 42C2-1-7	Process Instructions - Metal Treatment of Electrodeposition of Metals and Metal Surface Treatments to Meet Air Force Requirements
TO 44B-1-122	General Maintenance Instructions for Anti-Friction Bearing

Table 1-4. Related Army Publications

NUMBER	TITLE
AR 200-1	Environmental Quality: Environmental Protection and Enhancement
AR 750-59	Army Corrosion Prevention and Control
DA PAM 738-751	Functional Users Manual for the Army Maintenance Management Systems – Aviation (TAMMS-A)
FM 3-5	Nuclear, Biological, and Chemical Decontamination
TB 43-0118	Field Instructions for Painting and Preserving Communications-Electronics Equipment
TM 3-250	Storage, Shipment, Handling, and Disposal of Chemical Agents and Hazardous Chemicals
TM 55-1500-323-24	Installation Practices for Aircraft Electric and Electronic Wiring
TM 55-1500-345-23	Painting and Marking of Army Aircraft

Table 1-5. Other Related Publications

NUMBER	TITLE
DOD 6050.5-LR	Hazardous Material Information System
FED-STD-595	Colors Used in Government Procurement
J-STD-001	Requirements for Soldered Electrical and ElectronicAssemblies
MIL-E-17555	Packaging of Electronic and Electrical Equipment Accessories, and Provisioned Items
MIL-HDBK-263	Electrostatic Discharge Control Handbook for Protection of Electrical and Electronic Parts, Assemblies, and Equipment (Excluding Electrically Initiated Explosive Devices)
MIL-HDBK-729	Corrosion and Corrosion Prevention - Metal
MIL-HDBK-773	Electrostatic Discharge Protective Packaging
MIL-STD-129	Marking For Shipment and Storage
MIL-STD-461	Requirements for the Control of EMI, Characteristics of Subsystems and Equipment
MIL-STD-464	Electromagnetic Environmental Effects Requirements for Systems
MIL-STD-1686	Electrostatic Discharge Control Program for Protection of Electrical and Electronic Parts, Assemblies, and Equipment (Excluding Electrically Initiated Explosive Devices) (Metric)
MIL-STD-2073-1	Standard Practices for Military Packaging
MIL-STD-2161	Paint Schemes and Exterior Markings for U.S. Navy and Marine Corps Aircraft

CHAPTER 2
CLEANING AND LUBRICATION

2-1. GENERAL.

2-1.1. The materials, equipment, and techniques described in this chapter are intended to assist the avionic technician at the Intermediate Maintenance Activity (IMA). This includes the cleaning and drying of avionic equipment. Generally, where support equipment is available, corrosion removal, cleaning, and drying is more efficient.

2-1.2. Gross contamination requires support equipment capable of cleaning and corrosion removal as specified in the cleaning tracks (paragraph 2-4). The alternate cleaning procedures listed (paragraph 2-5) are considered sufficient for "day-to-day" cleaning and when support equipment is not available.

2-1.3. Pending standardization, use only support equipment that meets the general specifications as outlined in Volume IV (Navy and Army) or V (Air Force), Chapter 4.

2-1.4. The support equipment that is available in the supply system is listed in Volume IV (Navy and Army) or V (Air Force), Chapter 3. The general operating procedures and limitations for all of the various support equipment are listed in this chapter.

2-2. AVIONIC CORROSION CLEANING FACILITY.

2-2.1. REQUIREMENTS. Where space permits, a separate avionic corrosion control cleaning facility center shall be established as specified in OPNAVINST 4790.2 (Navy) or TO 00-20-1 (Air Force). See Figure 2-1 and Figure 2-2 for an example of an avionic cleaning facility arrangement. The avionic cleaning facility and staffing shall include the following as a minimum:

CAUTION

Maintenance personnel should be concerned about safety at all times. Cigarette smoke, food, and beverages can contaminate and damage avionic equipment. Do not smoke or have food or beverages in the same work space as maintenance operations.

a. Adequate space for safe operation of avionic cleaning and corrosion removal equipment.

b. Personnel trained in the operation of each piece of support equipment.

c. Quality assurance inspectors trained in the operational characteristics and restrictions of each piece of support equipment.

d. Operating instructions for each piece of support equipment.

e. Safety equipment and clothing as required by local directive and this manual.

f. Personnel trained in recognition of corrosion on avionic equipment as specified in this manual.

g. Avionic technicians who can recognize the various electrical and electronic components.

2-2.2. ALTERNATE REQUIREMENTS. Support equipment shall be placed where fumes, overspray, dust, or other residual materials will not contaminate avionic modules or components. The requirements specified in paragraph 2-2.1. shall also apply wherever cleaning and corrosion removal equipment is operated. Close supervision and sufficient quality assurance personnel/procedures are required at the avionic cleaning facility. Cleaning and corrosion removal equipment can be detrimental to some avionic components. The decision to use cleaning and corrosion removal equipment shall be the responsibility of the avionic cleaning facility supervisor.

2-2.3. INDUCTION PROCEDURES. The induction of avionic equipment for cleaning and/or corrosion control shall be as follows:

2-2.3.1. Induction of avionic equipment shall be documented on the appropriate maintenance action forms (MAFs) in accordance with procedures established under OPNAVINST 4790.2 (Navy), TO 00-20-1 (Air Force), or DA PAM 738-750/DA PAM 738.751 (Army).

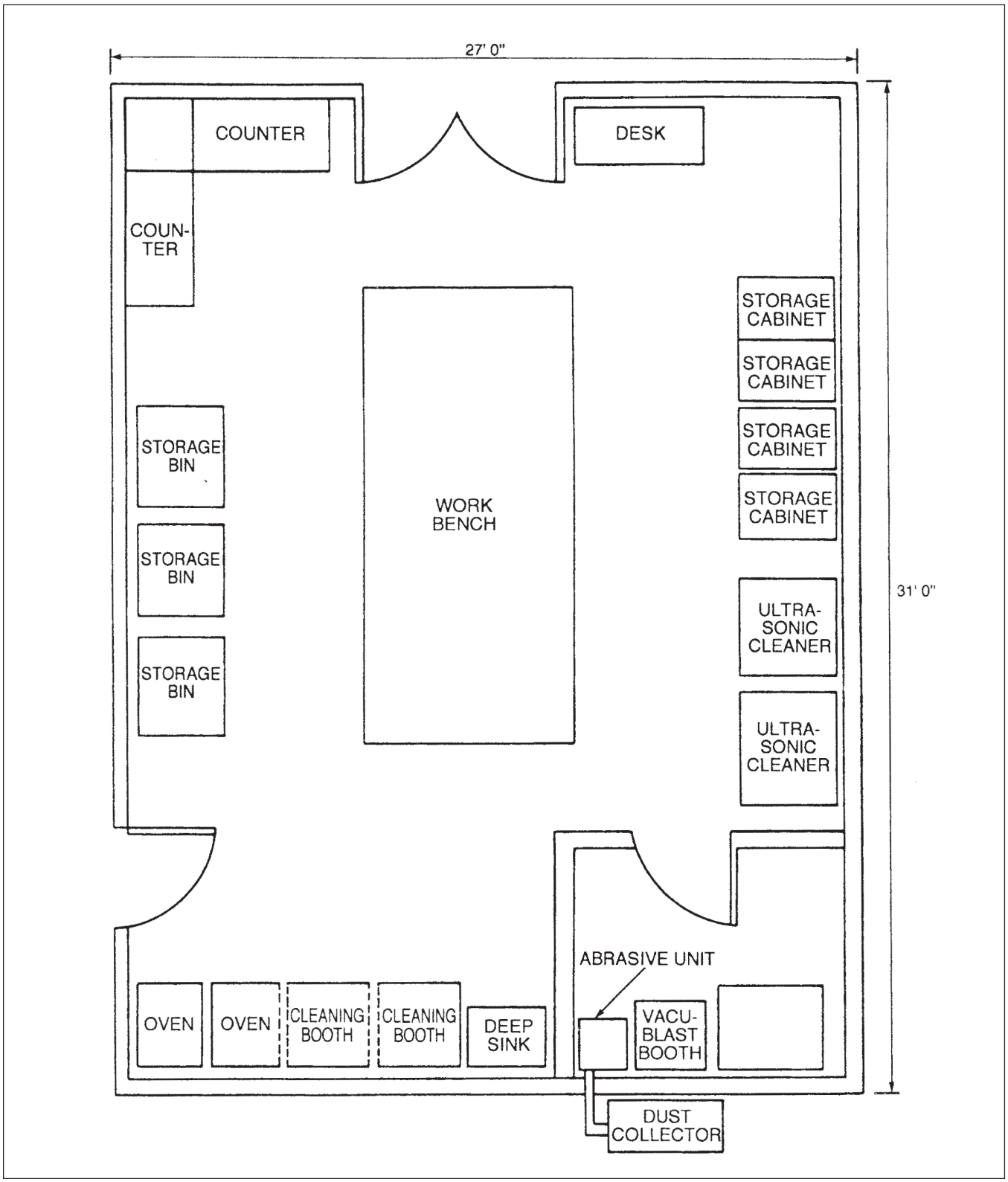

Figure 2-1. Typical Avionic Cleaning Facility

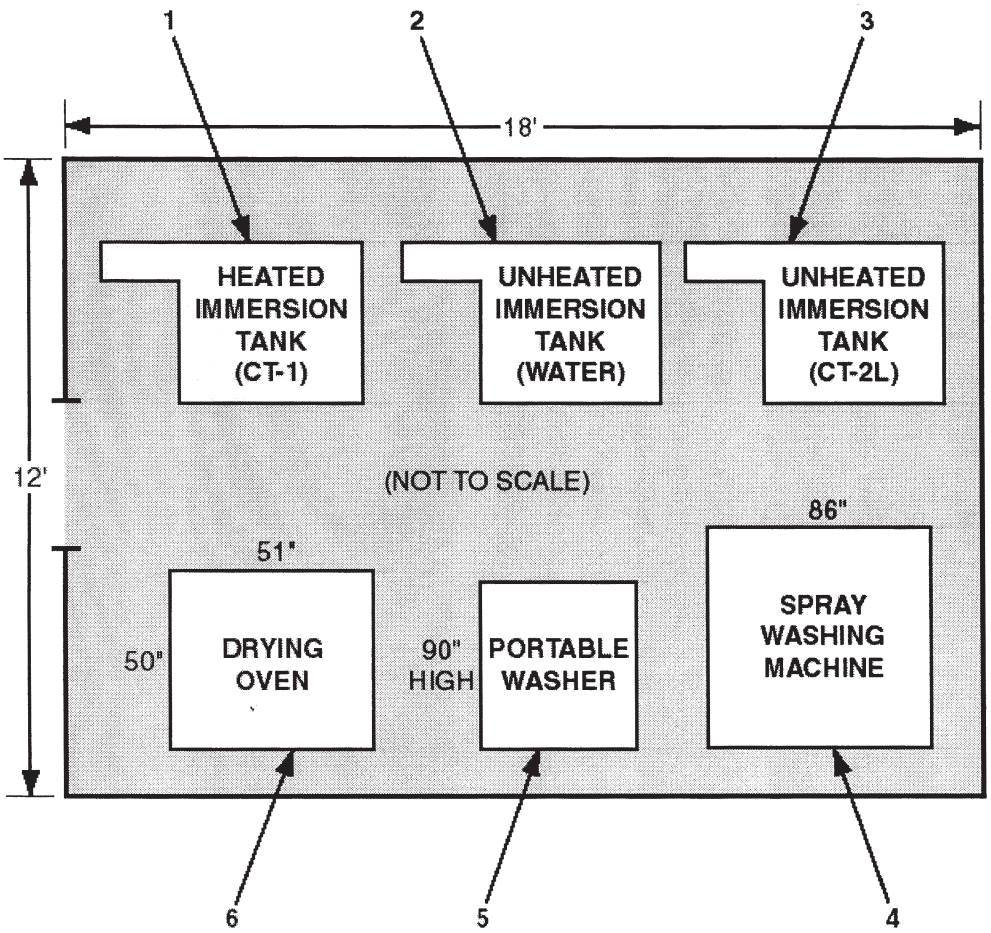

See Figure 2-4.

LEGEND:

1. HEATED IMMERSION TANK (CT-1) (CTM1H)
2. UNHEATED IMMERSION TANK (WATER) (CTM1U)
3. UNHEATED IMMERSION TANK (CT-2L) (CTM1U)
4. SPRAY WASHING MACHINE (CTM2)
5. PORTABLE WASHER (CTM4)
6. DRYING OVEN (*CTM444)

*MODEL NUMBER WILL VARY BY SIZE.

Figure 2-2. Typical Track 8 Equipment Layout

2-2.3.2. Each module or component inducted shall be inspected for:

a. The type of contamination.

b. The extent of corrosion damage.

c. Identification of items considered sensitive to cleaning and corrosion removal procedures.

2-2.3.3. After inspection, the "cleaning track" shall be selected by the criteria provided in paragraph 2-4.

2-3. MATERIALS AND SUPPORT EQUIPMENT REQUIREMENTS.

2-3.1. GENERAL. Avionic technicians must understand the functions, capabilities, and restrictions that apply to each material and piece of support equipment. This prevents damage to personnel and avionic equipment that could result from improper use.

2-3.2. MATERIALS. Consumable materials listed in Volume IV (Navy and Army) or V (Air Force), Chapter 2, and equipment listed in Volume IV (Navy and Army) or V (Air Force), Chapter 3, shall be used for corrosion control. These materials have been approved only after extensive testing to prove their ability to perform properly and effectively. Materials or processes considered to be an improvement over existing ones, after local laboratory analysis and evaluation, shall be forwarded to the Aircraft Controlling Custodians (ACC) or System Program Manager (SPM) for submission to the parent service organization for further evaluation. When approved materials are not available, substitutions shall only be made by the appropriate ACC/SPM.

2-3.3. MATERIALS USE. Only those materials listed in this manual shall be used for cleaning or corrosion control of avionic components. Materials listed in other manuals shall be used only when required procedures are not covered by this manual. Promising materials technology, after local laboratory analysis and evaluation, shall be forwarded to the parent service organization for further evaluation. When several methods or materials are listed, the preferred one is listed first, with alternates following.

2-3.4. SUPPORT EQUIPMENT. Tools and support equipment authorized for cleaning and corrosion removal on avionics equipment are listed in this chapter, Chapter 4, and Volume IV (Navy and Army) or V (Air Force) of this manual.

2-3.5. SUPPORT EQUIPMENT USE. Each piece of support equipment has been selected to perform specific functions. These intended functions are identified in Chapter 4 and include general limitations applicable to each type of support equipment. Maintenance personnel should refer to the appropriate support equipment operating manuals for specific operating instructions.

2-4. CLEANING TRACKS.

2-4.1. GENERAL. A cleaning track represents a definite process that applies to a particular type of contaminant or corrosion product. This includes consideration for the restrictions that may apply to a specific piece of support equipment and/or avionic component. It is important that cleaning equipment operators have a thorough knowledge of electrical and electronic equipment. This should be supplemented by a knowledge of which components can be processed by a particular cleaning track. These cleaning tracks are shown in Figure 2-3.

2-4.2. CLEANING TRACK SELECTION CRITERIA. The selection of the cleaning track to be used is based on the following criteria:

NOTE

Always select the mildest form of cleaning that will accomplish the task.

a. Type and extent of the contamination or corrosion.

b. Accessibility to the contamination or corrosion.

c. Type of avionic equipment.

2-4.3. TYPE AND EXTENT OF CONTAMINATION. Table 2-1 describes the various forms of contamination and the cleaning track best suited for each. There is more than one track available for cleaning each type of contamination. Use hand-cleaning procedures as alternatives if cleaning tracks are not available.

2-4.4. CLEANING TRACK PRESELECTION REQUIREMENTS. The avionic cleaning facility supervisor or equipment operator shall identify the

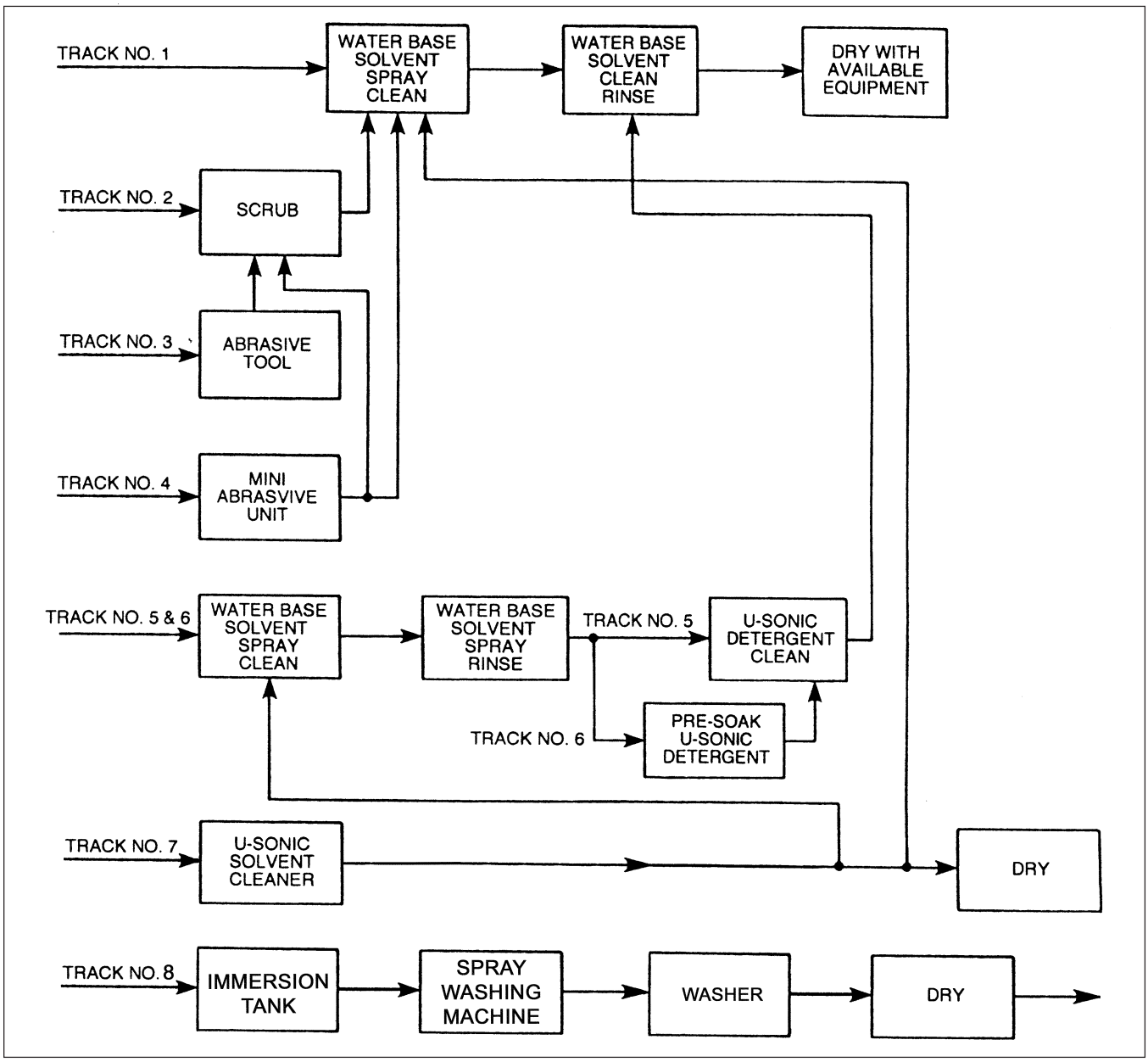

Figure 2-3. Cleaning Track Diagram

type of contamination and extent of the damage to select the correct cleaning track. Experience has shown that most avionic equipment has dirt, dust, or some form of corrosion present, and requires cleaning. If contamination or corrosion is not evident, confirmation via inspection by an experienced avionic technician is required.

2-4.5. ACCESSIBILITY TO CONTAMINATION AND CORROSION. Visual inspection of avionic components usually indicates the extent of contamination and corrosion damage. Visual inspection also determines the cleaning method required to remove contaminants or corrosion from tight areas. The aqueous ultrasonic and solvent ultrasonic cleaners provide the most efficient means of cleaning hard to reach areas. Consideration must also be given to drying that follows the cleaning cycle. In some cases, the most efficient means of cleaning may require extensive drying. This makes the whole process less efficient.

Table 2-1. Types of Contamination versus Cleaning Tracks

Type of Contamination	Cleaning Track Numbers							
	1	2	3	4	5	6	7	8
Light Dirt/Dust	√				√			√
Heavy Dirt/Dust		√				√		
Salt Spray	√	√			√	√		√
Light Corrosion		√		√	√			√
Heavy Corrosion			√	√		√		√
Oil						√	√	
Grease						√	√	
Hydraulic Fluid						√	√	

2-4.6. TYPE OF AVIONIC EQUIPMENT. The criteria for selection of a cleaning track are also based on type of avionic component to be cleaned. A thorough inspection of the item to be cleaned is important to determine the type of circuitry and components involved. Table 2-2 is a guide for determining the cleaning track to use on various electronic and electrical components.

2-4.7. CLEANING RESTRICTIONS.

2-4.7.1. Selection of the cleaning track is a decision to be made by the avionic cleaning facility supervisor. Certain circuit components can be damaged by support equipment.

2-4.7.2. The use of support equipment on certain avionic equipment and components is restricted (paragraphs 2-5.2. to 2-5.2.5.3.).

2-4.8. CLEANING TRACK IDENTIFICATION. The Cleaning Track Diagram, Figure 2-3, shall be used in conjunction with Cleaning Track Legend, Table 2-3. The cleaning track legend defines each element of the cleaning track. Each function and subfunction on the cleaning track is assigned an alphanumeric code. These characters are used to identify the cleaning track for recordkeeping purposes. It may be desirable to keep a log of all avionic equipment and components processed through the cleaning tracks. In such cases, the cleaning track number would identify exactly the process used when cleaning a particular component.

2-4.9. CLEANING TRACK EXAMPLE. As an illustrative example of cleaning track use, assume the cleaning track is "BCSR235". This would correspond to the following maintenance actions (refer to Figure 2-3 and Table 2-3):

a. B - Clean with the abrasive tool and glass beads.

b. C - Scrub with cleaning brush.

c. S - Clean with water base spray with one ounce of detergent, MIL-D-16791, in 1 gallon of fresh water at a maximum of 30 psi.

d. R - Rinse with water base spray with fresh water at a maximum of 30 psi.

e. 2 - Dry in circulating air drying oven at 130°F (54°C).

f. 3 - Air dry as required.

g. 5 - Preserve as specified by the component's Maintenance Instruction Manuals (MIMs) or Chapter 9.

2-4.10. CLEANING TRACK DESCRIPTIONS. The cleaning tracks are designed to fulfill specific functions. Drying selection depends on availability of drying ovens, Volume of the component, and time available for drying. Appropriate painting, preservation, and packaging steps are selected for the individual item being cleaned. The following are description of each cleaning track based on Figure 2-3 and Table 2-3.

2-4.10.1. Track No. 1.

2-4.10.1.1. This track removes light dirt, dust, and salt spray. Solvent and detergent ultrasonic cleaners are not required. This track is considered the mildest and has the widest application in cleaning of various types of avionic equipment.

2-4.10.1.2. The component is cleaned and rinsed in the Cleaning Booth (Booth, Cleaning, Water Base Solvent Spray) using Detergent, MIL-D-16791. One ounce (2 tablespoons) of detergent is mixed in one gallon of fresh water.

Table 2-2. Recommended Cleaning Process versus Type of Avionic Equipment

Type of Equipment	Aqueous Ultrasonics	Solvent Ultrasonics	Water Base Spray Booth	Abrasive Tool	Mini-Abrasive	Hand Clean
Antennas, Blade	√	√	√		√	√
Antennas, Dome	√(1)	√(1)	√	√(1)	√	√
Antennas, ECM					√	√
Antennas, Radar			√	√(1)	√	√
Batteries						√
Chassis	√	√	√	√	√	√
Circuit Breaker Panels	√	√	√		√	√
Coaxial Connectors					√	√
Control Boxes	√	√(1)	√		√	√
Edge Connectors			√		√	√
Generators	√	√(1)	√	√(1)	√	√
Gyroscopes			√(1)		√(1)	√
High Density Connectors					√	√
Housing/Covers	√	√	√	√	√	√
Instruments					√(1)	√
Light Assemblies	√	√	√	√(1)	√	√
Motors	√	√(1)	√	√(1)	√	√
Plugs and Connectors			√		√	√
Printed Circuit Boards			√			√
Racks/Mounts	√	√	√	√	√	√
Servos/Synchros					√(1)	√
Waveguides	√	√	√	√(1)	√	√
Wire Harnesses			√		√	√
Note: (1) External use only.						

Table 2-3. Cleaning Track Legend

Code	Equipment	Notes
B	Abrasive Tool	Glass Beads, MIL-G-9954
C	Scrub	Cleaning Brush, A-A-2074
S	Water Base Spray Clean	Detergent, MIL-D-16791, at 30 psi maximum
R	Water Base Spray Rinse	Fresh Water Rinse at 30 psi maximum
W	Mini-Abrasive Unit	Sodium Bicarbonate, Technical, A-A-374
P	Ultrasonic Detergent Presoak	1 ounce (2 tablespoons) Detergent, MIL-D-16791, to 1 gallon of water at 30 psi at 130° F (54° C)
PA	Ultrasonic Detergent Presoak	30 seconds
PB	Ultrasonic Detergent Presoak	60 minutes
D	Ultrasonic Detergent Clean	1 ounce (2 tablespoons) Detergent, MIL-D-16791, to 1 gallon of water at 30 psi at 130° F (54° C)
DA	Ultrasonic Detergent Clean	30 seconds
DB	Ultrasonic Detergent Clean	3 minutes
DC	Ultrasonic Detergent Clean	15 minutes
1	Forced Air Drying Oven	130° F (54° C) maximum
1A	Forced Air Drying Oven	30 minutes
1B	Forced Air Drying Oven	1 hour
1C	Forced Air Drying Oven	2 hours
2	Circulating-Air Drying Oven	130° F (54° C) maximum
2A	Circulating-Air Drying Oven	4 hours
2B	Circulating-Air Drying Oven	8 hours
2C	Circulating-Air Drying Oven	16 hours
3	Air Drying	As required
4	Paint	Refer to Volume II (Navy), TO 1-1-8 (Air Force), or TM 55-1500-345-23 (Army)
5	Preservation	Refer to preservation procedures as specified for component's MIMs or Chapter 9
6	Conformal Coating	Refer to NAVAIR 01-1A-23 (Navy) or TO 00-25-234 (Air Force)
7	Packaging	Refer to paragraph 9-3.

2-4.10.2. Track No. 2.

Compound, Aircraft Cleaning 4
MIL-PRF-85570

2-4.10.2.1. This track removes heavy dirt, light corrosion products, and salt spray. The component is hand scrubbed with Cleaning Brush, A-A-2074, and a diluted solution of Cleaning Compound, MIL-PRF-85570 Type II. Air Force may use MIL-PRF-87937 Type II or IV as an alternate cleaning compound. This is mixed one part cleaning compound to ten parts of distilled water.

2-4.10.2.2. After the scrubbing cycle, the component is cleaned and rinsed in the Cleaning Booth (Booth, Cleaning, Water Base Solvent Spray). If required, the component is processed through Track No. 1 to remove dirt and contaminants in hard to reach areas.

2-4.10.3. Track No. 3.

2-4.10.3.1. This track removes heavy rust and other corrosion deposits. The component is placed in a Blast Cleaning Cabinet and cleaned with a hand-held abrasive tool. This tool, included in cleaning cabinet, is used to clean the rust and corrosion.

Compound, Aircraft Cleaning 4
MIL-PRF-85570

2-4.10.3.2. After the abrasive cycle, the component is hand scrubbed with a Cleaning Brush, A-A-2074, and a diluted solution of Cleaning Compound, MIL-PRF-85570 Type II. Air Force may use MIL-PRF-87937 Type II or IV as an alternate cleaning compound. This is mixed one part cleaning compound to ten parts of distilled water.

2-4.10.3.3. After the scrubbing cycle, the component is cleaned and rinsed in the Cleaning Booth (Booth, Cleaning, Water Base Solvent Spray). If required, the component is processed through Track No. 1 to remove dirt and contaminants in hard to reach areas.

2-4.10.4. Track No. 4.

2-4.10.4.1. This track removes light or heavy corrosion products from small delicate components, (for example, edge connector pins on printed circuit boards, relay contacts, plugs). The component is placed in a Blast Cleaning Cabinet. The Portable Mini-Abrasive Unit uses sodium bicarbonate as an abrasive to remove the rust and corrosion.

Compound, Aircraft Cleaning 4
MIL-PRF-85570

2-4.10.4.2. After the abrasive cycle, if required, the component is hand scrubbed with a Toothbrush and Cleaning Compound, MIL-PRF-85570 Type II. Air Force may use MIL-PRF-87937 Type II or IV as an alternate cleaning compound. This is mixed one part cleaning compound to ten parts of distilled water.

2-4.10.4.3. After abrasive and scrub cycles, the component is cleaned and rinsed in a Cleaning Booth (Booth, Cleaning, Water Base Solvent Spray).

2-4.10.4.4. As in the previous tracks, the component is processed through Track No. 1, as required, to remove contaminants from hard to reach areas.

2-4.10.5. Track No. 5.

2-4.10.5.1. This track removes general dirt and dust, salt spray, and light corrosion, particularly in hard to reach areas of electronic assemblies.

2-4.10.5.2. This track follows the same steps as Track No. 6 with the exception of the presoak step.

2-4.10.5.3. If the contaminants remain, the process is repeated as required.

2-4.10.6. Track No. 6.

Detergent, Non-Ionic 5
MIL-D-16791

2-4.10.6.1. This track loosens heavy dirt, corrosion products, and light residues of oil, grease, and hydraulic

fluids. The component is precleaned and rinsed in a Cleaning Booth (Booth, Cleaning, Water Base Solvent Spray).

2-4.10.6.2. The Aqueous Ultrasonic Cleaner uses a cleaning solution of water and Detergent, MIL-D-16791. One ounce (2 tablespoons) of detergent is mixed in one gallon of fresh water at 130°F (54°C).

2-4.10.6.3. The component is suspended in the ultrasonic tank solution in a wire basket approximately 12 inches below the surface. Presoak for a period of 30 to 60 minutes, as appropriate.

2-4.10.6.4. After the presoak cycle, the component is cleaned in the same tank by ultrasonic mode at 20 kHz. The selection of time cycle for ultrasonic mode depends on the amount of contamination.

2-4.10.6.5. The component is rinsed in a Cleaning Booth (Booth, Cleaning, Water Base Solvent Spray) after ultrasonic cleaning. If contaminants remain, the component is returned to presoak and the process is repeated as required.

2-4.10.7. Track No. 7.

2-4.10.7.1. This track removes grease, oil, and hydraulic fluid contamination. The solvent degreasing operation is performed by the Solvent Ultrasonic Cleaner. The ultrasonic tanks use cleaning solvent, ENVIROSOLV 654CR.

2-4.10.7.2. The component is placed in the ultrasonic solvent tank 6 inches above the bottom of the tank to complete the cleaning cycle.

2-4.10.7.3. The selection of time cycle for ultrasonic mode depends on the amount of contamination present and the type of circuitry involved.

2-4.10.7.4. If required, the component is cleaned and rinsed in the Cleaning Booth (Booth, Cleaning, Water Base Solvent Spray).

2-4.10.8. Track No. 8.

2-4.10.8.1. The referenced cleaning equipment is representative for these procedures. Suitable substitutes may be used. Figure 2-2 shows a representative cleaning line layout and typical space requirements. A typical portable washer (CTM4) (Figure 2-4) is offered in both automatic and manual models and requires 1 square meter of shop floor space and a 110 or 220 volt source.

2-4.10.8.2. Although the information presented in this procedure is based upon the evaluation of CHEM-TECH International Inc. equipment and associated processes, the Track 8 procedures can be tailored to other commercially available equipment and cleaning agents.

2-4.10.8.3. Cleaning Equipment. Refer to Volume IV or V for the physical characteristics and facility requirements for the Track 8 cleaning line of equipment.

2-4.10.8.4. Cleaning Agents.

WARNING

Some cleaning chemicals may be toxic and flammable. Avoid contact with skin and eyes. Avoid breathing vapors. Use with adequate ventilation. Keep away from heat, sparks and flame. Avoid contact with strong oxidizing agents. Protection: neoprene gloves and chemical goggles; faceshield and protective clothing required when splashing is possible or expected; half-mask respirator with organic vapor cartridge required in poorly ventilated areas.

Unless designated otherwise by the cognizant field activity or manufacturer, spent cleaning materials shall be segregated and stored as regulated waste for ultimate off-site disposition via licensed contractor.

2-4.10.8.4.1. CT-1 is a water-based multipurpose cleaning detergent used to clean electromechanical and electronic assemblies.

2-4.10.8.4.2. CT-2L is a single step cleaning agent or supplemental treating agent following CT-1 cleaning. CT-2L is a water displacement agent.

2-4.10.8.5. Avionic Equipment**.** Caution shall be exercised to ensure there will be no adverse effects on avionic equipment performance as a result of the cleaning process.

2-4.10.8.6. Cleaning Procedures.

2-4.10.8.6.1. Equipment Preparation. A thorough inspection of the item to be cleaned is important to

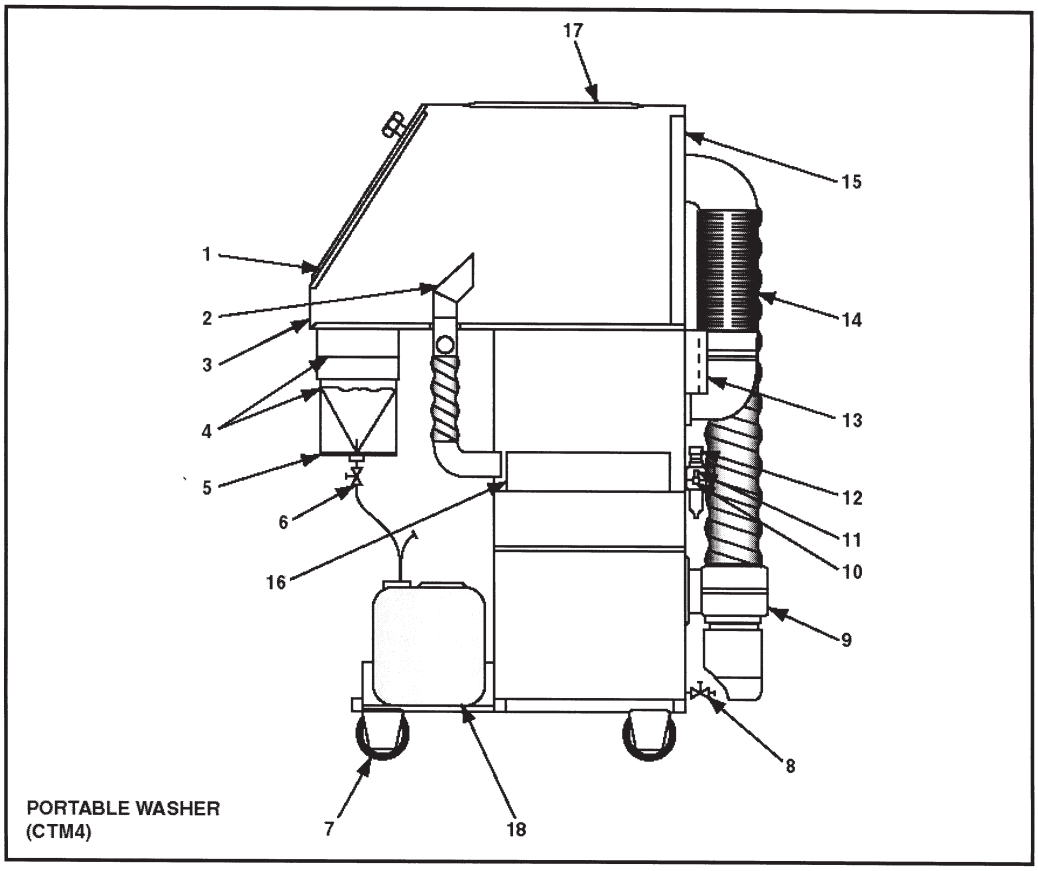

LEGEND:

1. OPENING INFEED/TURN-UP PISTOL WINDOW SHIELD WITH
2. AIR RETURN NOZZLES
3. WORKING SPACE
4. LIQUID FILTER
5. STORAGE TANK
6. DISCHARGE VALVE
7. LOCKING ROLLERS
8. DISCHARGE VALVE
9. BLOWER MOTOR
10. CONNECTION FOR SPRAYING PISTOL
11. CONNECTION FOR AIR
12. WATER SEPARATOR PRESSURE GAUGE
13. PROTECTIVE CIRCUIT BREAKER
14. EXHAUST AIR CHARCOAL FILTER
15. AIR FILTER
16. INSPECTION LID
17. WINDOW SHIELD
18. TANKS FOR CLEANSING AGENTS

Figure 2-4. Portable Washer (CTM4)

ensure that the process and cleaning agents are compatible with the manufacturer's recommendations.

2-4.10.8.6.2. Cleaning Agent Preparation. Prepare cleaning agent CT-1 with 5 parts deionized water and 1 part CT-1. CT-2L is used as supplied.

2-4.10.8.6.3. Cleaning Procedure. There are two batch type Track 8 cleaning procedures: CT-1/CT-2L Cleaning Process and CT-1/CT-2L Cleaning Process (Ultrasonics).

CAUTION

Refer to manufacturer supplied material safety data sheets (MSDS) for applicable usage precautions and appropriate personal protective equipment.

2-4.10.8.6.3.1. CT-1/CT-2L Cleaning Process.

NOTE

Heated water will accelerate the cleaning process.

a. Mix CT-1 with five parts water (manufacturer recommended concentration)

b. Heat CT-1 solution to approximately 130°F (55°C). Heating will accelerate the cleaning process.

c. Light Cleaning. Place component to be cleaned in a basket or on a grate or stand (preferably stainless steel) and submerge in CT-1 solution 1 inch above the bottom of the container for approximately 5 minutes.

d. Heavy/Corrosion. Place component to be cleaned in a basket or on a grate or stand (preferably stainless steel) and submerge in CT-1 solution 1 inch above the bottom of the container for approximately 30 minutes.

CAUTION

Once the component is submerged into the cleaning agent, it should be checked for effect on any markings after 1 to 3 minutes and verified every 3 to 5 minutes thereafter.

e. When soil appears loose, remove component from tank.

f. Soak or spray with deionized water to remove soil and CT-1.

g. If soil is not removed, lightly scrub and repeat steps c through g.

WARNING

CT-2L shall not to be heated or diluted with water. When heated above flash point of 140°F, CT-2L will release vapors. Vapors when mixed with air and exposed to an ignition source can burn in an open environment or explode when confined.

h. CT-2L Soak Method. Using a grate or stand (preferably stainless steel) in the bottom of the CT-2L container, soak component in the agent for 2 to 5 minutes. Water will drain to the bottom.

i. CT-2L Spray Method. Spray clean component with CT-2L, paying particular attention to areas where water or loose contaminants may be trapped.

j. If residue is still present, soak or spray again in accordance with steps h or i.

k. Blow off CT-2L in the spray washer (CTM4 or CTM2). This step will decrease drying time and conserve CT-2L.

WARNING

Compressed air for drying can create airborne particles that may enter the eyes. Pressure shall not exceed 10 psi. Eye protection is required.

l. Dry using a heat lamp, hot air, or a drying oven.

2-4.10.8.6.3.1. CT-1/CT-2L Cleaning Process (Ultrasonics).

WARNING

Ultrasonic cleaning may be harmful to soft tissue or skin. Do not place hands in tank when unit is in operation.

NOTE

Heated water will accelerate the cleaning process.

For initial operation and/or whenever the solution is changed, degassing is required.

Ensure that the ultrasonic frequency is 40 MHz or higher.

a. Initial/Changed Solution. Degas solution by activating ultrasonics for 20 to 30 minutes prior to commencing the cleaning process.

b. Mix CT-1 with five parts water (manufacturer recommended concentration).

c. Heat CT-1 solution to approximately 130°F (55°C). Heating will accelerate the cleaning process.

d. Light Cleaning. Place component to be cleaned in a basket or on a grate or stand (preferably stainless steel). Submerge component in an ultrasonic tank of CT-1 solution 1 inch above the bottom of the container for approximately 1 to 3 minutes.

e. Heavy Corrosion. Place component to be cleaned in a basket or on a grate or stand (preferably stainless steel) and submerge in CT-1 solution 1 inch above the bottom of the container for approximately 10 minutes.

CAUTION

Once the component is submerged into the cleaning agent, it should be checked for effect on any markings after 1 to 3 minutes and verified every 3 to 5 minutes thereafter.

NOTE

If component is not cleaned in 10 minutes, component should be removed and inspected to determine whether to resoak in the CT-1 cleaning agent.

f. Soak or spray with deionized water to remove soil and CT-1.

g. If soil is not removed, lightly scrub and repeat steps d through g.

WARNING

CT-2L shall not be heated or diluted with water. When heated above flash point of 140°F, CT-2L will release vapors. Vapors when mixed with air and exposed to an ignition source can burn in an open environment or explode when confined.

h. CT-2L Soak Method. Using a basket, grate, or stand (preferably stainless steel) in the bottom of the CT-2L container, soak component in the agent for 2 to 5 minutes. Water will drain to the bottom.

i. CT-2L Spray Method. Spray clean component with CT-2L paying particular attention to areas where water or loose contaminants may be trapped.

j. If residue is still present, soak or spray in accordance with step h or i.

k. Blow off CT-2L in the spray washer (CTM4 or CTM2). This step will decrease drying time and conserve CT-2L.

l. Dry using a heat lamp, hot air, or a drying oven.

2-4.10.8.7. Disposal.

2-4.10.8.7.1. CT-1. CT-1 is biodegradable. Disposal depends on the contaminant being removed and the applicable state and local regulations. Landfill solids at permitted sites via licensed contractor in accordance with applicable federal, state and local regulations.

2-4.10.8.7.2. CT-2L. Landfill solids at permitted sites via licensed contractor. Used products may be classified as hazardous waste (ignitable) due to low flash point and may be incinerated or burned for energy recovery. CT-2L has a heating value of 20156 BTU/lb. Either option must be performed in accordance with federal, state and local regulations.

2-5. CLEANING MATERIALS, EQUIPMENT, AND TECHNIQUES.

2-5.1. AVIONIC CLEANING MATERIALS. The following paragraphs provide information to ensure the proper selection and application of avionic cleaning materials.

2-5.1.1. Availability of Materials. Only materials, equipment, and techniques approved by the applicable parent service organization shall be used on military aircraft and avionic systems. Volume IV and V, Chapter 2 (Consumable Materials), Volume IV and V, Chapter 3 (Equipment for Corrosion Control), and Volume IV and V, Chapter 4 (Special Avionic Equipment) are provided to ensure the availability of approved materials and equipment.

2.5.1.2. Materials Used for Cleaning**.** Table 2-4 contains a list and description of the authorized cleaning materials for avionic equipment. Cleaning can be accomplished as follows:

CAUTION

Some of the materials identified in Table 2-4 can create hazardous conditions or damage equipment unless used strictly in the applications and manner described. Authorized alternative materials are included in this manual, where applicable, to allow for potential supply shortages.

a. Solvent cleaning - solvents are effective in dissolving grease and oil. Solvents can be applied by wiping, brushing, soaking, or spraying.

Table 2-4. Avionic Cleaning Materials

Specification	Intended Use	Application	Restrictions
Cleaning Compound, Aircraft Surface, MIL-PRF-85570 Type II	General cleaning agent for light soil and dirt in equipment bays, on external cases and covers, and antenna assemblies.	Mix one part cleaner in 10 parts distilled water and apply with Cleaning Cloth, CCC-C-46 Class 7. Rinse with fresh water and wipe dry.	Do not use around oxygen, oxygen fittings, or oxygen regulators. Fires or explosion may result.
	Heavy concentration of surface grime, oil, exhaust smudge and fire extinguishing chemicals in equipment bays and on external cases and covers.	Mix one part cleaner in six parts distilled water and apply with Cleaning Cloth CCC-C-46 Class 7. Rinse with fresh water and wipe dry.	Never use full strength, Do not allow to dry on surface. Refer to Chapter 10 for emergency cleaning procedures after immersion or exposure to excessive amounts of salt water, fire extinguishing chemicals, soot, smoke, or vaporous gases.
Detergent, Liquid, Nonionic, MIL-D-16791 Type I	Cleans transparent and acrylic plastics and cockpit indicator glass covers. Also used in the Water-based Solvent Spray Cleaning Booth and the Aqueous Ultrasonic Cleaner for removing contaminants.	Mix 1 fluid oz (2 tablespoons) per gallon water. For hand cleaning, apply with Flannel Cloth, CCC-C-458 Type II. Let dry; then remove with dry flannel cloth.	
Cleaning and Cleaning-Lubricating Compounds Electrical Contact, Low Ozone Depletion Potential MIL-PRF-29608 Type I, Class L	A cleaner-lubricant compatible with potting compounds, rubbers, and insulation. May be used for cleaning and lubricating electrical contacts.	Apply by spraying an even film to the surface. Wipe clean with Disposable Applicator or Pipe Cleaner.	Avoid application to areas requiring solder or coating.
Type I, Class C	May be used for cleaning electrical contacts.		
Water, Distilled	Cleaner for solder flux residue in all applications of electronics, electrical equipment, and micro-miniature circuits.	Apply a solution of one part deionized or distilled water to three parts Isopropyl Alcohol, TT-I-735, and scrub joint and adjacent area with Acid Brush, A-A-289 style opt. or Toothbrush, Wipe clean with Cleaning Cloth, CCC-C-46 Class 7.	Deionized water, obtainable from commercially available processing units that is pumped into some shore activity shops, is an authorized substitute.
Fluid, VV-D-1078	Dimethyl polysiloxane silicone. A lubricant compatible with potting compounds, rubbers and insulations. May be used to lubricate electrical contacts.	Apply sparingly using Disposable Applicator or Pipe Cleaner or syringe.	Avoid application to areas requiring soldering or coating.
Cleaning Compound, Aircraft Exterior, MIL-PRF-87937 Type II (Air Force only)	Water dilutable cleaning compound. Intended for medium to light cleaning of aircraft, the exterior of engines, and aerospace ground equipment (AGE). It can be used as an alternate replacement for MIL-PRF-87936 Type I. Suitable for use on high gloss or tactical paint systems.	Normal dilution is 1 part cleaner to 10 parts water. However, it can be diluted 4 parts cleaner to 10 parts water for spot cleaning.	Shall not be used for cleaning plastic type canopies without the authorization of the aircraft system manager.
Type IV (Air Force only)	Heavy duty water dilutable cleaning compound. Intended for light to heavy duty removal of greases, oils, hydraulic fluid, and carbon.	Normal dilution is 1 part cleaner to 10 parts water. However, it can be diluted 4 parts cleaner to 10 parts water for spot cleaning.	Shall not be used for cleaning plastic type canopies.

Table 2-4. Avionic Cleaning Materials (Cont.)

Specification	Intended Use	Application	Restrictions
Isopropyl Alcohol, TT-I-735	General purpose cleaner and solvent for removal of salt residue and contaminants common to internal avionic equipment. General cleaner for internal chassis components.	Apply a solution of one part deionized or distilled water and one part Isopropyl Alcohol, TT-I-735, to affected area with Cleaning Cloth, CCC-C-46 Class 7, or Toothbrush.	Isopropyl Alcohol, TT-I-735, is highly flammable. All applications of Isopropyl Alcohol, TT-I-735, and water may be air dried or dried by portable air blower or ovens.
	Solvent cleaner for solder flux residue in all applications of electronics, electrical equipment, and micro-miniature circuits.	Apply a solution of one part deionized or distilled water to three parts Isopropyl Alcohol, TT-I-735, and scrub the solder joint and adjacent area with Acid Brush, A-A-289 Style opt., or Toothbrush. Wipe Clean with Cleaning Cloth, CCC-C-46 Class 7.	
	Cleaner for fingerprint removal on metals and nonmetals.	Apply a solution of one part deionized or distilled water and one part Isopropyl Alcohol, TT-I-735, to affected area with Cleaning Cloth, CCC-C-46, Class 7. Wipe clean.	
	Cleaner for bacteria and fungi attack on all metals and nonmetals.	Apply Isopropyl Alcohol, TT-I-735, to affected area with Cleaning Cloth, CCC-C-46, Class 7. Wipe clean and air dry.	
	Cleaner for salt-water immersion and fire extinguishing agents on all internal circuit components and laminated circuit boards.	Apply Isopropyl Alcohol, TT-I-735 to affected area with Cleaning Cloth, CCC-C-46 or Acid Brush, A-A-289 style opt., or Toothbrush, as appropriate.	
	Cleaner for electrical contact surfaces.	Apply a solution of one part deionized or distilled water and one part Isopropyl Alcohol, TT-I-735, to affected area with Acid Brush, A-A-289 style opt., or Pipe Cleaner. Wipe clean and air dry.	

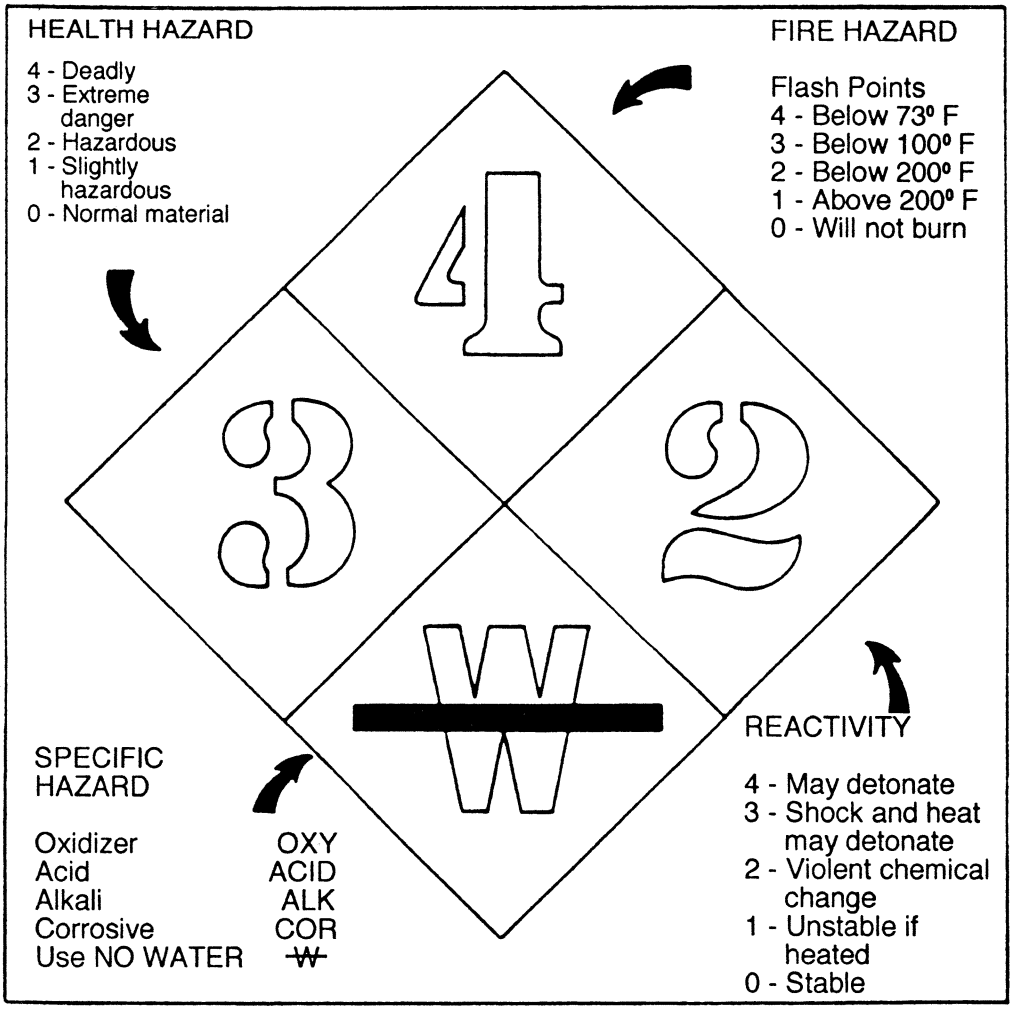

Figure 2-5. Hazardous Chemical or Material Identification Label

b. Detergent/water cleaning - varying concentrations of detergent and water mixtures are used to remove dust, dirt, salt, grease, and oil. Detergent/water mixtures can be applied by wiping, brushing, soaking, and spraying.

c. Distilled or fresh water is used to dilute isopropyl alcohol or detergents for use in cleaning. It may also be used to rinse or remove dust, dirt, salt, and cleaning solutions. Application can be by wiping, brushing, soaking or spraying.

2-5.1.3. Hazardous Chemical or Materials Identification Label. Many materials outlined in this manual are potentially hazardous to personnel and potentially damaging to aircraft, especially with improper use. When using any chemicals, such as paint strippers, detergents, conversion coatings, and solvents, follow the correct procedures with appropriate protective gear. Read the appropriate hazardous material identification label prior to use of any hazardous materials. Figure 2-5 shows the standard symbol format using numerals and symbols to describe the degree of hazard. These labels include descriptions of health, fire, reactivity, and specific hazards of the packaged product. Hazardous chemicals used in corrosion control and their specific hazards are listed in the Hazardous Materials Warning Symbols (HMWS) section of this volume. Refer to TM-3-250 (Army only) for proper storage, shipment, handling and disposal of hazardous chemicals.

2-5.2. AVIONIC CLEANING EQUIPMENT. The following paragraphs provide information to ensure the proper selection and application of avionic cleaning equipment.

2-5.2.1. General. Experimentation with cleaning support equipment is not an authorized practice. Damage to circuit components may result from reactions to chemical solutions used in cleaning equipment. Avionic technicians should understand the functions, capabilities, and restrictions that apply to each piece of cleaning equipment. This will prevent damage to avionic equipment and circuit components that could result from improper use. Each piece of cleaning equipment has been selected to perform specific functions. The following paragraphs identify these intended functions and include general limitations as applicable to each type of support equipment.

NOTE

Maintenance personnel should refer to appropriate cleaning equipment service manuals for specific operating instructions.

2-5.2.2. Aqueous Ultrasonic Cleaner. The following is a list of the specific restrictions that apply to the use of Aqueous Ultrasonic Cleaner (Volume IV or V, Chapter 4).

CAUTION

Miniature and microminiature printed circuit boards (PCBs) may be susceptible to damage due to ultrasonic frequency, power level, or both. Due to the difficulty of determining which components may be damaged, ultrasonic cleaning of PCBs is not authorized unless specified. For additional information, refer to NAVAIR 01-1A-23 (Navy) or TO 00-25-234 (Air Force).

2-5.2.2.1. The Aqueous Ultrasonic Cleaner is used for the removal of dirt, dust, salt spray deposits, and corrosion products. This is achieved by ultrasonic scrubbing action in detergent and water solution.

a. The maximum operating temperature shall be 130°F (54°C). The operating frequency used shall be 20 kHz.

b. An additional function of the equipment is that of "presoaking" avionic equipment and components prior to the ultrasonic function.

CAUTION

Paper capacitors and paper-bound components disintegrate in Detergent, MIL-D-16791, solution.

c. Detergent, MIL-D-16791 (Volume IV or V, Chapter 2) is the specified detergent. This detergent solution shall be mixed 1 ounce (2 tablespoons) detergent to 1 gallon of water.

2-5.2.2.2. Sealed bearings, synchro and servo bearings, instrument bearings, and similar devices with permanently lubricated bearings can experience lubricant removal. These devices would be rendered useless unless there are procedures specified in the applicable service directives for relubrication. When practical, avionic equipment containing such bearings can be cleaned by aqueous ultrasonics if the bearings are sealed in a plastic bag.

2-5.2.2.3. Sealed components (other than hermetically sealed) can trap detergents and water. This may cause drying problems. In each case, the sealed component shall be opened to eliminate detergent traps.

2-5.2.2.4. Thin metal foil types of gummed labels can loosen and separate.

2-5.2.3. Solvent Ultrasonic Cleaner. The following is a list of the specific restrictions that apply to the use of Solvent Ultrasonic Cleaner (Volume IV or V, Chapter 4):

Alcohol, Isopropyl 6
TT-I-735

2-5.2.3.1. The Solvent Ultrasonic Cleaner is used to remove light to heavy oil, grease, and hydraulic fluid contamination by ultrasonic scrubbing in a solvent solution.

a. The maximum operating temperature shall be the solvent's boiling point. The maximum operating frequency used shall be 40 kHz.

b. Solvent, Cleaning, ENVIROSOLV 654CR (Volume IV or V, Chapter 2), may be used in solvent ultrasonic cleaner applications. MIL-PRF-680 Type III

may be used in the solvent ultrasonic cleaner if used at room temperature.

2-5.2.3.2. Coaxial connector gaskets and other neoprene rubber components are susceptible to damage by solvents. Also, cleaning solvents can wick up the coaxial leads causing condensation and drying problems. Where solvent ultrasonic cleaning is desired, equipment containing these devices can be cleaned only if the coaxial connector can be sealed in a plastic bag.

2-5.2.3.3. Sealed bearings, synchro and servo bearings, instrument bearings and similar devices with permanently lubricated bearings shall be treated as specified in paragraph 2-5.2.2.3.

2-5.2.3.4. Sealed components (components other than hermetically sealed) shall be treated as specified in paragraph 2-5.2.2.4.

2-5.2.3.5. Solvent, Cleaning can be used as a solvent degreaser. The restrictions as specified in this paragraph apply to solvent degreaser functions. The solvent vapor rinse and solvent vapor drying functions do not use the ultrasonic frequency function. Therefore, they may be used to rinse and dry PCBs.

2-5.2.4. Water Base Solvent Spray Booth. The following is a list of the specific restrictions that apply to the use of Water Base Solvent Spray Booth (Volume IV or V, Chapter 3).

2-5.2.4.1. The Water Base Solvent Spray Booth is used to remove dirt, dust, salt spray deposits, and light corrosion products. This is achieved by a detergent and water spray system.

a. The spray equipment provides an air pressure powered spray of detergent solution through a hand-held gun, using either filtered or tap water. It also can deliver a water rinse or drying jet of air through the gun.

b. A turntable is included, allowing 360 degree rotation of the avionic equipment being cleaned or rinsed.

c. The unit may be used as a "precleaner" prior to placing the component in a detergent cleaning tank.

d. The unit also is used to rinse components after the application of detergent cleaning, abrasive corrosion removal, or hand cleaning operations.

NOTE

Increasing the proportion of detergent in the solution does not necessarily increase cleaning power. This can, in some cases, reduce cleaning effectiveness.

e. Detergent, MIL-D-16791 (Volume IV or V, Chapter 2), is the specified detergent. The detergent solution shall be mixed 1 ounce (2 tablespoons) detergent to 1 gallon of water.

2-5.2.4.2. Sealed bearings, synchro and servo bearings, instrument bearings, and similar devices with permanently lubricated bearings shall be treated as specified in paragraph 2-5.2.2.3.

2-5.2.4.3. Sealed components (other than hermetically sealed) shall be treated as specified in paragraph 2-5.2.2.4.

2-5.2.5. Abrasive Tools. The following is a list of the specific restrictions that apply to the use of abrasive tools.

2-5.2.5.1. Mono-Basic Sodium Phosphate, AWWA-B504 (Volume IV or V, Chapter 2), or Glass Beads, MIL-G-9954 (Volume IV or V, Chapter 2), used in abrasive tools are easily trapped in miniature and microminiature female edge connectors. When use of a Blast Cleaning Cabinet on internal chassis components is necessary, the connectors shall be sealed with Pressure Sensitive Tape, SAE-AMS-T-21595, Type I (Volume IV or V, Chapter 2). Ensure that the tape is removed following cleaning.

2-5.2.5.2. Delicate metal surfaces are susceptible to damage if abrasive tools are not used with care. Only experienced operators are authorized to use abrasive tools on avionic equipment.

2-5.2.5.3. Some miniature/microminiature PCBs contain devices sensitive to electrostatic discharge (ESD) that may be destroyed by the static charge created by abrasive agents used in abrasive tools. In no case is a Blast Cleaning Cabinet or Portable Mini-Abrasive Unit (Volume IV or V, Chapter 4) authorized for cleaning or corrosion removal of components where ESD devices are installed.

2-5.3. AVIONIC CLEANING PROCEDURES. The following paragraphs provide information to ensure the proper cleaning of avionic equipment.

2-5.3.1. General. Contamination is responsible for corrosion problems in avionic equipment. Cleaning can prevent many of these problems and is the first logical step following inspection. Cleanliness is very important in maintaining the functional integrity and reliability of avionic systems. Dirt may be either conductive or insulating. As a conductor, it may provide undesired electrical paths, while as an insulator it may interfere with proper operation.

2-5.3.2. Cleaning Methods Selection Criteria. The selection of the cleaning method is a decision to be made by the work center supervisor or equipment operator. Certain circuit components can be damaged by support equipment. This paragraph is intended to emphasize the limitations involved in using support equipment on certain avionic equipment and components. The method used shall be based on:

NOTE

Always select the mildest method of cleaning that will accomplish the task.

a. Type and extent of the contamination and/or corrosion.

b. Accessibility to the contamination and/or corrosion.

c. Type of avionic equipment.

CAUTION

Acid cleaners shall not be used on avionic equipment.

NOTE

Deionized or distilled water is required in cleaning operations involving soldering and some conformal coating applications. If deionized or distilled water is not available locally, distilled water may be procured under the stock number listed in Volume IV or V, Chapter 2.

2-5.3.3. Hazards of Cleaning. It is a good maintenance practice to use the mildest cleaning method that will ensure proper decontamination. It is also important that the correct cleaning solution and cleaning materials are used to avoid damaging avionic equipment and components. The following emphasizes some of the hazards of cleaning:

a. Cleaning solvents or materials can be trapped in crevices or seams. This may interfere with later applications of protective coatings as well as causing corrosion.

b. Vigorous or prolonged scrubbing of laminated circuit boards can cause damage to the boards.

c. Certain cleaning solvents soften conformal coatings, wire coverings, acrylic panels, and some circuit components

2-5.3.4. When to Clean. The immediate removal of corrosion on avionic equipment and surrounding structure is always a high priority in corrosion control. Therefore, immediate cleaning shall be accomplished after avionic equipment has been exposed to any of the following conditions:

a. Adverse weather conditions or salt-water spray (open canopy, equipment door, or panel).

b. Fire-extinguishing agents.

c. Spilled electrolyte or corrosion deposits around battery terminals and the general vicinity of the battery area.

d. Corrosion removal or component repair.

2-5.3.5. Precleaning Treatment.

a. Disconnect power supply.

b. Ensure drain holes are open.

c. Remove covers or panels.

d. Disassemble where practical.

e. Use only authorized materials.

f. Ensure compatibility of materials prior to use.

g. Mask and protect accessories or components to prevent entrance of water, solvents or cleaning components.

2-5.3.6. Cleaning and Drying Restrictions. Certain circuit components create potential problems during cleaning and drying. In most cases, the problems can be overcome prior to cleaning the equipment. The greatest potential for problems is the circuit component

Table 2-5. Cleaning and Drying Restrictions

Component	Problem	Solution
APC Connectors (Microwave)	Shock damage to center conductor	Seal and hand clean only
Crystal Detectors	Heat damage from oven	Dry at 130° F (54° C) maximum
Delay Lines (Physical)	Trap solution in housing	Seal or remove
Fan Motors	Trap solution in housing	Seal or remove
Gyroscopes	Trap solution in housing	Seal
Klystron Cavity	Trap solution in sockets	Remove tube and seal socket
Meters and Instrument Gauges	Trap solution through open back	Seal
Paper Capacitors	Disintegrate	Seal
Potentiometers	Trap solution through open housing	Seal
Printed Circuit Board	Trap solution (when installed)	Remove (clean separately)
Rotary Switches	Trap solution through open housing	Seal
Sliding Attenuators (RF)	Trap solution in slide housing	Seal or remove
Sliding Cam Switches	Shock damage to cam	Remove or hand clean only
Synchros and Servos	Removes lubricant from bearing	Seal or remove
Transformers	Trap solution in housing	Seal
Tunable Cavities	Trap solution in cavity area	Seal or remove
Vacuum Tubes	Shock damage	Remove
Variable Attenuators (Microwave)	Trap solution is housing	Seal or remove
Waveguide (Microwave)	Trap solution in guide housing (when installed)	Seal or remove
Wire Wrap Connections	Shock damage	Hand clean only

that traps water or solvents because of its construction. Table 2-5 lists the components and shows the techniques to use to avoid problems. In some cases, mechanical cleaning and drying equipment may create a problem due to shock, vibration, or high temperature. These problems are listed in Table 2-5. The procedures that shall be used to avoid water and solvent traps are as follows:

Alcohol, Isopropyl 6
TT-I-735

2-5.3.6.1. Seal small components with Tape, Pressure Sensitive, SAE-AMS-T-21595 (Volume IV or V, Chapter 2). Ensure tape and tape residue are removed using Degreasing Solvent, MIL-PRF-680 Type II (Volume IV or V, Chapter 2) followed with Isopropyl Alcohol, TT-I-735 (Volume IV or V, Chapter 2) prior to drying the equipment.

2-5.3.6.2. Seal large components in Plastic Bags (Volume IV or V, Chapter 2) or seal with Barrier Material, Water Vapor Proof, MIL-PRF-131 Class 1 (Volume IV or V, Chapter 2). Place the bag or barrier material around the component and seal with Tape, Pressure Sensitive, SAE-AMS-T-21595 (Volume IV or V, Chapter 2). Ensure tape and bag or barrier material are removed. Tape residue may be removed using Degreasing Solvent, MIL-PRF-680 Type II (Volume IV or V, Chapter 2,) followed with Isopropyl Alcohol, TT-I-735 (Volume IV or V, Chapter 2), prior to drying the component.

NOTE

Repair conducted by Organizational/Unit or Intermediate Maintenance Activities shall not include disassembly of avionic equipment beyond authorized limits established by the parent service organization. Cleaning, corrosion repair, treatment and preservation of equipment shall include all cables, harnesses, and hardware furnished with each piece of equipment.

2-5.3.6.3. In some cases the component may be removed from the equipment without too much difficulty. When this is possible, the removed component shall be cleaned separately.

2-5.3.7. Hand Cleaning Methods. Hand methods shall be used for cleaning small, delicate, confined surfaces where parts cannot tolerate other means of cleaning. Also, hand methods shall be used when accessories/ facilities for other methods that are not available. Hand cleaning methods for avionics utilize the following (refer to Volume IV or V):

a. Cloth, CCC-C-46.

b. Cheesecloth, CCC-C-440.

c. Cotton tip applicator.

d. Acid brush, A-A-289.

e. Toothbrush.

f. Brush.

g. Lint-free cloth, A-A-59323.

h. Cotton flannel, CCC-C-458.

i. Plastic manual spray bottle.

2-5.3.8. Fingerprint Removal. The fats and oils caused by fingerprints are highly corrosive.

Alcohol, Isopropyl 6
TT-I-735

WARNING

Do not use synthetic fiber wiping cloths with Isopropyl Alcohol, TT-I-735, due to its low flash point. Dry fiber wiping cloths will cause a static charge buildup and can result in a fire.

2-5.3.8.1. Apply a mixture of one part Isopropyl Alcohol, TT-I-735 (Volume IV or V, Chapter 2), and one part distilled water to affected areas with Cleaning Cloth, CCC-C-46 (Volume IV or V, Chapter 2), Acid Brush A-A-289 (Volume IV or V, Chapter 3), Toothbrush, or any brush as appropriate.

2-5.3.8.2. Wipe or scrub affected area until contaminants have been dislodged.

2-5.3.8.3. Remove residue by blotting or wiping with Cleaning Cloth, CCC-C-46 (Volume IV or V, Chapter 2). Inspect affected areas for signs of residues and contaminants.

2-5.3.8.4. Discard contaminated cloths and solvents in approved disposal containers after cleaning operation to avoid contamination of other components.

2-5.3.8.5. Repeat process until all contaminants are removed.

2-5.3.9. Cleaning and Removal of Solder Flux Residue. Solder flux residue is present in all solder operations. This residue will cause corrosion if an electrolyte is present. Use of cleaning solvents that do not damage associated wiring circuit components, or laminated circuit board coatings is required. The presence of solder flux can be detected by using Ultraviolet Light.

CAUTION

Prior to ultraviolet (UV) light inspection, avionic equipment must be examined for Erasable Programmable Read Only Memory (EPROM) components.

2-5.3.9.1. EPROMs have windows that are usually covered with an aluminum foil mask or black tape. Visually examine EPROMs to ensure the tape or foil

has not lifted from the windows. Do not place EPROMs near a UV light source for long periods of time. Natural sunlight includes ultraviolet light, although at a much lower intensity than the light from the ultraviolet lamp. Extended exposure of EPROM and ESD devices to sunlight can degrade these devices.

WARNING

Ultraviolet Light is harmful to eyes when used without the filter. Do not use a cracked or damaged filter.

2-5.3.9.2. Inspect component for presence of solder flux residue using ultraviolet light (Volume IV or V, Chapter 3). Under ultraviolet light, traces of solder flux resin appear as a fluorescent yellow to brownish residue.

WARNING

Lead contained in solder can rub off onto a person's hands from a soldered joint. Lead oxide is a poison that is not eliminated by the body and can accumulate over years of exposure. Touching solder followed by smoking or eating is a potential means of ingesting trace amounts of lead oxide. Wash hands thoroughly following any soldering/ desoldering operation.

Alcohol, Isopropyl 6
TT-I-735

2-5.3.9.3. Solder flux residues shall be removed from circuit boards and circuit components in accordance with Cleaning Track 1 (paragraph 2-4.10.). Use a solution of one part distilled water to three parts of Isopropyl Alcohol, TT-I-735 (Volume IV or V, Chapter 2), to clean the affected area. Refer to ANSI/ J-STD-001 for additional information on solder fluxes and soldering techniques.

2-5.3.9.4. Store critical circuit components not installed in equipment as specified in paragraph 9-2.4. Ensure EPROM devices have windows covered. Refer to Chapter 8 for packaging information on ESD devices.

2-5.3.10. Cleaning and Removal of Silicone Lubricant. Remove silicone residue from surfaces as follows:

2-5.3.10.1 Wipe contaminated surface with Cleaning Cloth, CCC-C-46 Class 7 (Volume IV or V, Chapter 2), Acid Brush, A-A-289 (Volume IV or V, Chapter 3), Disposable Applicator (Volume IV or V, Chapter 3), or Pipe Cleaner (Volume IV or V, Chapter 3), dampened with Cleaning Compound, MIL-PRF-85570 Type II (or MIL-PRF-87937 (Air Force)) or Cleaning Solvent (Volume IV or V, Chapter 2) until clean.

2-5.3.10.2 Dry surface with Cleaning Cloth, CCC-C-46, Class 7, Disposable Applicator, or Pipe Cleaner.

2-5.3.11. Cleaning and Removal of Bacteria and Fungi. Dirt, dust, and other airborne contaminants are leading contributors to bacteria and fungus (microbial) attack. The best defense against this form of attack is to maintain cleanliness and, where possible, low humidity. Fungus and bacteria shall be removed from affected areas as follows:

2-5.3.11.1. Mask air capacitors, relay contacts, open switches, and tunable coils with Pressure Sensitive Tape, SAE-AMS-T-21595 Type I (Volume IV or V, Chapter 2).

2-5.3.11.2. Treat affected areas in accordance with paragraph 2-5.3.8.

2-5.3.12. Cleaning and Removal of Dust, Dirt, Grease, and Oil. Dust and dirt shall be removed by wetting surface with fresh water as follows:

Compound, Aircraft Cleaning 4
MIL-PRF-85570

2-5.3.12.1. Apply a solution of one part Aircraft Cleaning Compound, Class I, MIL-PRF-85570, Type II (Volume IV or V, Chapter 2) to ten parts distilled water. Air Force may use MIL-PRF-87937 Type II or IV as an alternate cleaning compound.

2-5.3.12.2. Scrub affected areas of parts with Cleaning and Polishing Pad, Non-Abrasive (Volume IV or V, Chapter 2), Cleaning Cloth, CCC-C-46 (Volume IV or V, Chapter 2), Cloth, Cheese-Cloth, CCC-C-440 (Volume IV or V, Chapter 2), Brush, Acid Swabbing, A-A-289 (Volume IV or V, Chapter 3), Toothbrush, or Applicator, Cotton Tipped (Volume IV or V, Chapter 3).

2-5.3.12.3. Wipe area with Cleaning Cloth, CCC-C-46.

2-5.3.12.4. Rinse with clean, fresh water and by area with Cleaning Cloth, CCC-C-46.

2-5.3.12.5. Remove grease and oil as specified in paragraph 2-5.3.12.1. Use a solution of one part Aircraft Cleaning Compound, MIL-PRF-85570, to ten parts of distilled water. Air Force may use MIL-PRF-87937 Type II or IV as an alternate cleaning compound.

2-5.3.13. Surface Preparation. The true cleanliness of bare metal surfaces after a cleaning process is very critical to adhesion of any subsequent coating material. For example, a chemical conversion coating, paint, dry film lubricant, or adhesive needs a clean surface to adhere properly. One method used to identify when a surface is clean enough for good adhesion is the Water Break Test. The procedure is described in Volume II (Navy and Army) and TO 1-1-691 (Air Force). This test is appropriate for use at the time of the final clear water rinse. This usually follows cleaning of any bare metal surface for adhesion.

2-5.3.14. Special Considerations. Dust, fingerprints, surface oxides, contaminants, or other foreign material on a surface, can undo preservation provided by protective coatings. Specific avionic subsystems, equipment, and components shall be cleaned as specified in Chapter 6.

2-5.3.15. Post-Cleaning Procedures. When aerosol spray, compressed air, or air from dryers is used on ESD devices, precautions in NAVAIR 01-1A-23 (Navy) or TO 00-25-234 (Air Force) shall be followed.

2-5.3.15.1. After completion of the cleaning steps, reinspect the affected area for signs of residue, surface film, or water.

2-5.3.15.2. If the affected area is not clean, repeat the cleaning procedures. Water-displacement, preservation, and lubrication shall follow the cleaning and drying steps in preventive maintenance.

2-6. DRYING EQUIPMENT AND PROCEDURES.

2-6.1. GENERAL. Drying time depends on the complexity of the equipment/component being dried. The more complex the individual component, the longer the drying time. Another consideration in drying time is the humidity or moisture content of the air where the drying oven is operated. The higher the moisture content of ambient air, the longer the drying time.

2-6.2. DRYING PREPARATION. Prior to placing a component in a drying oven, remove all covers, lids, and open all doors. Ensure any pressure sensitive tape and protective plastic bags used during the cleaning process have been removed.

CAUTION

The motion of air against other materials can generate static charges that degrade or destroy ESD devices. Care must be exercised during handling/repair of these items. Use the recommended shop practices outlined in Chapter 8.

2-6.3. AIR DRYING. Air drying is usually adequate for housings, covers, and some hardware. This method is not considered adequate for more complex equipment or components that may contain cavities or moisture traps.

2-6.4. DRYING WITH HOT AIR BLOWER. Procedures for the use of hot air blowers are as follows:

WARNING

Compressed air used for drying can create airborne particles that may enter the eyes. Pressure shall not exceed 10 psi. Eye protection is required.

2-6.4.1. Blow off excess water with dry air or dry nitrogen at not more than 10 psi pressure. Deflect air off interior back and sides of enclosure to diffuse jet.

CAUTION

Portable air blowers, hot air blowers, hair dryers, and similar drying devices may cause fires when used in or around aircraft. Hot Air Gun, Raychem, HT-900, or an equivalent spark-proof substitute, is the only authorized hot air gun to be used in and around aircraft. Hot Air Gun, A-A-59435, is authorized for shop use only.

2-6.4.2. Dry the equipment with a Hot Air Gun, A-A-59435 (Volume IV or V, Chapter 3), or Hot Air Gun, Raychem, HT-900 (Volume IV or V, Chapter 3), as appropriate. Surfaces should not be heated with the hot air gun above 130°F when drying equipment.

2-6.5. DRYING WITH CIRCULATING AIR DRYING OVEN. The Circulating Air Drying Oven, (Volume IV or V, Chapter 3) is used to dry small electrical and electronic components (such as unpressurized instruments), control boxes, PCBs, and similar devices. The circulating air drying oven shall never be operated above 130°F (54°C) when drying avionic equipment or components. Damage may result from overheating of discrete electronic circuit components. Procedures for the operation of the circulating air drying oven are as follows:

2-6.5.1. Blow off excess water with dry air or dry nitrogen at no more than 10 psi pressure. Deflect air off interior back and sides of enclosure to diffuse jet.

CAUTION

Older circulating air drying ovens may have uncalibrated dials or controls for setting the oven temperature. These ovens shall be calibrated so that the 130°F (54°C) temperature setting is "red lined" on the dial or control.

2-6.5.2. Set the temperature control at a maximum of 130°F (54°C).

2-6.5.3. Place the component(s) in the oven and close the door. If a timer is available, set it for 3 to 4 hours.

NOTE

Opening and closing the oven door during drying will increase drying time. This is due to diffusion of hot, dry air in the oven cabinet with cooler, more humid air from the surrounding shop.

2-6.5.4. Upon completion of the drying cycle, remove the component(s).

2-6.6. DRYING WITH FORCED AIR OVEN. The Forced Air Drying Oven (Volume IV or V, Chapter 3) is the most efficient of the drying ovens. This unit can be used to dry all types and sizes of equipment and components. The procedures for the operation of the forced air drying oven are as follows:

CAUTION

The motion of air against other materials can generate static charges that degrade or destroy ESD devices. Care must be exercised during handling/repair of these items. Use the recommended shop practices outlined in Chapter 8.

2-6.6.1. Blow off excess water with dry air or dry nitrogen at no more than 10 psi pressure. Deflect air off interior back and sides of enclosure to diffuse jet.

CAUTION

Check the temperature dial (or control calibration) periodically to ensure the temperature setting is correctly calibrated.

2-6.6.2. Set the temperature control at a maximum of 130°F (54°C).

2-6.6.3. Place the component(s) in the oven and close the door. If a timer is available, set it for 1 to 2 hours. Opening and closing the oven door during drying will increase the drying time slightly but not appreciably. This is considered one of the advantages of the forced air drying oven over the circulating air type.

2-6.6.4. Upon completion of the drying cycle, remove the component(s).

2-6.7. DRYING WITH VENTED OVEN (BULB TYPE). Vented drying oven procedures are as follows:

2-6.7.1. Blow off excess water with not more than 10 psi dry air pressure or dry nitrogen. Deflect air off interior, back, and sides of enclosure to diffuse jet.

2-6.7.2. Dry the equipment at approximately 130°F (54°C) for 3 to 4 hours.

2-6.8. DRYING WITH VACUUM OVEN. Vacuum oven drying procedures are as follows:

CAUTION

The motion of air against other materials can generate static charges that degrade or destroy ESD devices. Care must be exercised during handling/repair of these items. Use the recommended shop practices outlined in Chapter 8.

2-6.8.1. Blow off excess water with not more than 10 psi dry air pressure or dry nitrogen. Deflect air off interior, back, and sides of enclosure to diffuse jet.

2-6.8.2. Dry the equipment at approximately 130°F (54°C) and 26 inches of mercury (Hg) for 1 to 2 hours.

2-7. LUBRICANTS.

2-7.1. GENERAL. Lubrication of equipment performs several important functions. It not only prevents wear between moving parts but provides a corrosion barrier and chemically inhibits corrosion. Particular attention should be given to lubrication points, hinges, and latches. Inspect for signs of lubricant breakdown; for example, caking of grease, loss of oil or dry film lubricant, or evidence of contamination.

2-7.2. REQUIREMENTS. Maintenance personnel should refer to the applicable service directives for specific lubrication requirements.

THIS PAGE LEFT INTENTIONALLY BLANK

CHAPTER 3
INSPECTION AND CORROSION PRONE AREAS

3-1. CORROSION PRONE AREAS.

3-1.1. GENERAL. There are certain corrosion-prone areas common to all aircraft. For example, the bilge area of an airframe is particularly susceptible to moisture intrusion. This area is where cable runs, wire bundles, coaxial cables, lights, and antenna are installed. It is almost impossible to seal the equipment and components in this area against moisture and fluid intrusion. Even though the bilge is a rather obvious problem area, there are other areas of concern, such as structural, electromechanical, and electronic components.

3-1.1.1. Frequent inspections and spot checks are fundamental to the preventive maintenance aspects of an avionic corrosion control program. . This should be done by personnel familiar with the detection, analysis, and treatment of corrosion and microbial attack.

3-1.1.2. The most useful tool for detection of corrosion is the human eye. Visual inspection can usually reveal the existence of corrosion and microbial attack in their initial stages. This is usually when corrosion treatment is relatively easy. When corrosion or microbial attack is apparent, a specific and immediate program for corrective treatment involves paint and/or surface coating removal and cleaning. In addition, removal of corrosion/fungus, restoration of surfaces, and prompt application of protective coatings/paint finishes are also required. Each type of corrosion has its own peculiarities and requires special treatment.

3-1.2. MOISTURE AND OTHER FLUID INTRUSION SOURCES. The flexible airframe of modern military aircraft prevents effective sealing. Equipment bay doors, access panels, ducts, static pressure sensors, and other fuselage openings allow moisture intrusion. As a result, moisture and other fluids pool in water-traps or bilge areas not designed for their presence. In addition, the mission profile, mode of operation, and field climatic exposure extremes compound any problems associated with the inadequate environmental integrity of the airframe. When water penetrates the airframe, these lines and cables help direct moisture and fluid contaminants to avionic equipment and components. A simple hydraulic line can direct water many feet through the airframe and deposit it on equipment. This often occurs in areas of the airframe that are assumed to be protected. A wire bundle can carry moisture into the avionic equipment housing via an electrical connector backshell. Military aircraft are generally susceptible to moisture and other fluid intrusion originating from the following sources:

a. Rainstorms

b. Water washdown systems

c. Hand washing cycles

d. Sea water spray

e. Environmental control systems

f. Hydraulic, fuel, and engine oil, anti-icing and coolant line leaks

g. Condensation from cyclic temperature and pressure variation

h. Emergency firefighting materials

i. Solvents, detergents, strippers, and other cleaning materials

3-1.3. STRUCTURAL. Parts including housings, covers, supports, brackets, cabinets, and chassis are required for structural support. Corrosion on these parts should be treated to eliminate long term deterioration. Severe corrosion usually results from coatings failure and subsequent attack on exposed metal. The corrosion is caused by handling or environmental attack such as moisture and/or microbial contamination. Major repairs should be performed at Depot level. Preventive maintenance, corrosion control, and touchup procedures may be accomplished at the Intermediate maintenance level. Organizational/Unit maintenance level can provide minor assistance with these procedures.

3-1.4. ELECTROMECHANICAL. Motion is an integral function of electromechanical switches, relays, potentiometers, motors, generators, and synchro parts. Failure of these parts normally does not occur during operation. The friction tends to keep the critical surfaces clean enough to permit operation. Storage or nonuse in certain environments tends to promote corrosion of these parts. The principle causes of malfunction are dust, condensates, resultant corrosion products

Table 3-1. Effects of Corrosion on Avionic Equipment

Component	Failure Mode
Antenna Systems	Shorts or changes in circuit constants and structural deterioration
Batteries	High resistance at terminals, failure of electrical contact points, and structural deterioration of mounting. Erroneous cockpit signals
Bus Bars	Structural and electrical failures
Chassis, Housings, Covers, and Mount Fames	Contamination, pitting, loss of finish, and structural deterioration
Coaxial Lines	Impedance fluctuations, loss of signals, and structural deterioration of connectors
Control Box Mechanical and Electrical Tuning Linkage and Motor Contacts	Intermittent operation and faulty frequency selection
Display lamps and Wing Lights	Intermittent operation, mechanical and electrical failures
Fluid Cooling System Lines	Failure of gaskets, pitting, and power loss
Multi-pin Cable Connectors	Shorts, increased resistance, intermittent operation, and water seal deterioration
Plugs, Connectors, Jacks and Receptacles	Shorts, increased resistance, intermittent operation, and reduced system reliability
Power Cables	Disintegration of insulation, and wire/connector deterioration
Printed Circuits and Microminiature Circuits	Shorts, increased resistance, component and system failures
Relay and Switching Systems	Mechanical failure, shorts, intermittent operation, and signal loss
Shock Mounts and Supports	Deterioration and loss of shock effectiveness
Water Traps	Structural deterioration
Waveguides	Loss of integrity against moisture, pitting, reduction of efficiency and structural deterioration

(oxides) and organic contaminant films. Insulating films form during nonuse and prevent startup of equipment. Once the equipment is activated, the insulating film is removed by friction between surfaces.

3-1.5. ELECTRONIC. Moisture and contamination penetrate into electronic systems causing many detrimental effects, corrosion being one of these. In most electronic systems, circuit areas have been minimized for faster signal processing and higher density. This means that most circuit paths are thin, or small in cross-sectional area, and that individual circuit paths are close together. In such systems, trace amounts of moisture and contamination may cause system failure. For example, if the aluminum surface of an integrated circuit (IC) is contaminated, affected circuit paths may become blocked. This extreme sensitivity requires special caution when dealing with corrosion in electronic systems. The typical effects of corrosion on avionic equipment are listed in Table 3-1.

3-1.6. SPECIAL CONSIDERATIONS. The control of corrosion in avionic systems is not unlike that in airframes. Procedures used for airframes are applicable to avionics with appropriate modifications. The general differences in construction and procedures between airframe and avionics relative to corrosion control are as follows:

a. Avionics rely on less durable protection systems.

b. Very small amounts of corrosion can make avionic equipment inoperative, as compared to airframes.

c. Dissimilar metals are often in electrical contact.

d. Stray electrical currents can cause corrosion.

e. Active metals and dissimilar metals in contact are often unprotected.

f. Closed boxes can produce condensation via normal temperature changes during flight.

g. Avionic systems have many areas that trap moisture.

h. Hidden corrosion is difficult to detect in many avionic systems.

i. Many materials used in avionic systems are subject to attack by bacteria and fungi.

j. Organic materials are often used that, when overheated or improperly or incompletely cured, can produce vapors. These vapors are corrosive to electronic components and damaging to coatings and insulators.

3-2. INSPECTION PROCESS.

3-2.1. GENERAL. Frequent corrosion inspections are essential to the overall corrosion control program. By early detection, identification, and treatment, the costs resulting from corrosion are minimized. Without regular systematic inspections, corrosion will seriously damage avionic equipment. The following paragraphs describe some of the basic aspects of visual inspection for corrosion and the telltale signs associated with various types of corrosion damage.

3-2.2. INSPECTION FACTORS. Calendar-based and phase maintenance inspections shall be in accordance with parent service or command directives. However, extreme humidity, temperature, atmospheric conditions and time shall be considered when determining the frequency of corrosion inspections. The following factors shall be considered when establishing local inspection intervals:

a. Operational environment.

b. Known corrosion-prone areas such as battery components, ram air turbines, and electrical bonds. Figure 3-1 shows corrosion caused by a blown capacitor.

c. Length of storage time, with respect to equipment and components. A corroded frequency test set is shown in Figure 3-2. This corrosion occurred while in storage.

Figure 3-1. Corrosion Caused by Blown Capacitor Acid

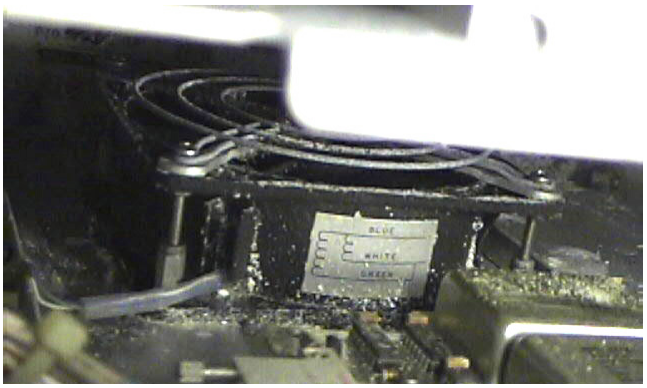

Figure 3-2. Frequency Test Set Corroded While in Storage

d. Length of time aircraft is nonoperational.

e. Nonpressurized equipment and equipment bays.

f. Antenna and externally mounted avionic packages such as electronic countermeasure (ECM) pods.

g. Equipment mounted in water entrapment areas.

h. Equipment susceptible to particularly harsh environments, such as sonobuoys and magnetic anomaly detection (MAD) systems.

i. System Fluids. The coolant of high power radar produces a black substance called "black plague" that adheres to immersed metal surfaces and adversely affects heat transfer properties. Waveguides are susceptible to this black plague.

j. Corrosion Effects of Solder Flux. Solder flux residues may be conductive as well as corrosive. They are often "tacky", collecting dust which can absorb moisture and create current leakage paths. Solder flux resin appears as an amber-colored globule, drip, or tail, at or near, the solder joint. Ultraviolet light may be used to detect the flux resin residue. Under the Ultraviolet light, traces of flux appear as a fluorescent yellow to light brown residue.

NOTE

Specific inspection criteria for individual types of avionic subsystems, equipment, and components are listed in Chapter 6.

3-2.3. GENERAL INSPECTION PROCEDURE. The following general procedures shall be used for avionic corrosion inspection:

a. Clean area or component by wiping with cleaning cloth, CCC-C-46, Class 7 (Vol IV or V, Chapter 2) to remove interfering soil or contaminant.

b. Use a 10X magnifying glass (Vol IV or V, Chapter 3) to inspect for evidence of corrosion and determine extent of damage. In the case of miniature or microminiature circuit boards and components, use the appropriate microscope, as necessary.

c. Refer to the applicable service directives for damage limits.

3-2.4. WATER INTRUSION INSPECTION. The avionic technician should routinely inspect the interior of equipment bays for evidence of water intrusion. Any evidence of corrosion damage should be reported so that appropriate maintenance action can be scheduled. To determine and eliminate the source of water intrusion:

a. Verify installation of fasteners. Replace as required.

b. Inspect form-in-place gasket. Repair or replace as required in accordance with the applicable structural repair manual.

c. Verify water drains are open and clear.

d. Prepare compartment with "witness material" such as blotter paper, paper towels, etc. The "witness material" shall be placed in a manner that will indicate a leakage path during the water test.

e. Secure compartment doors.

f. Where fresh water is in adequate supply, apply water with a hose to the exterior surface for approximately 5 minutes. Where water is in short supply, slowly pour a bucket of fresh water over the exterior surface.

g. Allow 3 to 5 minutes for water to drain.

h. Open compartment doors and examine "witness material" for signs of water.

Adhesive/Sealant, Silicone RTV, Non-Corrosive 1
MIL-A-46146

Sealing and Coating Compound (polysulfide) 2
MIL-PRF-81733

i. If leaks are observed, they shall be sealed with MIL-A-46146 or MIL-PRF-81733 (Vol IV or V, Chapter 2). MIL-PRF-81733 shall be used when sealant will be in contact with fluids such as coolants, fuel, or hydraulic oil.

NOTE

Where torquing is required to tighten hardware, refer to specific technical manual for proper torque values.

Compound, Corrosion Preventative 3
Water-Displacing
MIL-C-81309

j. (Navy/Army Only) Where applicable, apply MIL-C-81309 Type II (Vol IV, Chapter 2) to threads of fasteners before reinstallation.

k. (Air Force Only) Where applicable apply MIL-C-81309 Type II or MIL-L-87177 (Vol V, Chapter 2) to threads of fasteners before reinstallation.

l. Secure access/compartment doors.

m. Repeat water test until no leaks are detected.

3-2.5. EVALUATION OF CORROSION DAMAGE. Correct evaluation of avionic corrosion damage is necessary, and shall be classified as follows:

a. Repairable damage is damage that does not exceed the limits specified in the applicable service directives. The damaged surface or component shall be cleaned, treated, and a preservative applied, as applicable.

b. Replacement is required when damage exceeds repair limits.

3-2.6. Additional information on corrosion of specific metals and nonmetals is found in Volume I of this manual.

THIS PAGE LEFT INTENTIONALLY BLANK

CHAPTER 4
CORROSION REMOVAL

4-1. GENERAL.

4-1.1. MAINTENANCE FUNCTIONS. This chapter outlines the materials, equipment, and techniques involved in corrosion removal. In each case, some discretion on the part of the Organizational/Unit and Intermediate Maintenance personnel is warranted. It is important that personnel analyze the problem and select the correct corrosion removal materials. In addition, each case should be followed up where possible to see if the corrosion has been arrested. It is also extremely important that personnel identify whether the base material of connectors and accessories is metal or composite. Corrosion removal is an important function in maintaining miliary aircraft.

4-1.2. ITEM INSPECTION. Whenever equipment is removed from aircraft for bench check or repair, covers and housings should be inspected and treated for corrosion. Avionic technicians must ensure that corrosion repair, treatment, and preventive maintenance become part of normal maintenance and repair procedures.

4-2. CORROSION REMOVAL MATERIALS AND EQUIPMENT.

4-2.1. GENERAL. Organizational/Unit and Intermediate Maintenance Activities should review Volume IV (Navy and Army) or Volume V (Air Force) of this manual for a listing of consumable materials, tools, and support equipment authorized for use during corrosion control maintenance of avionic equipment. Air Force should also review TO 1-1-691. Where facilities and space permit, the additional materials/equipment described in Chapter 2 can be added to the Avionic Corrosion Work Center. This will achieve more efficient production of cleaning and treatment.

4-2.2. CORROSION REMOVAL. When corrosion is detected, corrective action is required. If the corrosion is within repairable limits specified in the applicable service directives, corrective action shall be initiated. This shall consist of cleaning, corrosion removal, treatment and preservation, where required. The mildest method shall always be used to remove corrosion. The following methods are approved for use on avionics:

4-2.2.1. Hand Rubbing/Abrasion.

4-2.2.1.1. The nature of some surfaces, such as chrome, nickel, gold and silver plated contacts, cadmium and tin plated connectors and accessories, limit the use of highly abrasive methods. Tarnish and light corrosion can be removed from such surfaces by rubbing with:

a. Eraser (Volume IV or V, Chapter 2).

b. Brushes, A-A-3077 and A-A-2074, (Volume IV or V, Chapter 3).

c. Non-Abrasive Pad, A-A-3100 (Volume IV or V, Chapter 2).

4-2.2.1.2. Other surfaces such as antenna mounts, equipment racks, chassis, can have light to heavy corrosion removed by hand rubbing with:

a. Abrasive Mat, A-A-58054 (Volume IV or V, Chapter 2).

b. Abrasive Cloth, ANSI-B74.18 (Volume IV or V, Chapter 2).

CAUTION

The Blast Cleaning Cabinet, Hand-Held Abrasive Tool, and Portable Mini-Abrasive Unit shall not be used to clean electrostatic discharge sensitive (ESD) devices. This includes, but is not limited to, microminiature and similar microelectronic components, separate or installed in equipment. Refer to paragraph 2-5.2.5. for other restrictions.

4-2.2.2. Portable Mini-Abrasive Unit. The Portable Mini-Abrasive Unit (Volume IV or V, Chapter 3) is a hand-held miniature abrasive tool used to remove light

corrosion products from small avionic components. For example, printed circuit board (PCB) edge connector pins, small avionic structural components. This abrasive unit should not be used on plated surfaces.

a. Mono-Basic Sodium Phosphate, AWWA-B504 (Volume IV or V, Chapter 2), is the specified abrasive material for use in the Mini-Abrasive Unit.

b. The Portable Mini-Abrasive Unit shall be operated only in a Blast Cleaning Cabinet. The monobasic sodium phosphate abrasive may contaminate other equipment and components if allowed to blow freely into the surrounding shop.

4-2.2.3. Hand-Held Abrasive Tool. This unit is used with a Blast Cleaning Cabinet to remove corrosion products from avionic equipment structures and housings.

a. Glass Beads, MIL-G-9954 (Volume IV or V, Chapter 2), are the specified abrasive material for use in the hand-held abrasive tool.

b. The Hand-Held Abrasive Tool shall be operated only in a Blast Cleaning Cabinet. The glass beads may contaminate other equipment and components if allowed to blow freely into the surrounding shop.

WARNING

Prolonged breathing of vapors from organic solvents or materials containing organic solvents is dangerous. Refer to DOD Instruction 6050.5LR. When in doubt, contact the local Safety Officer.

Chemical paint removers are toxic to skin, eyes, and respiratory tract. Avoid skin and eye contact. Use only with adequate ventilation. Emergency eye wash unit required.

CAUTION

Epoxy Paint Removers are harmful to rubber and plastic products, including wiring insulation. Exercise care to avoid contact with such surfaces. Mask those adjacent areas which are not to be stripped with Pressure Sensitive Tape, A-A- 59298.

4-2.2.4. Chemical Paint Removers. Epoxy Paint Remover, MIL-R-81294 (Volume IV or V, Chapter 2), shall be used to chemically remove paint and may be applied by brush. When used, care should be exercised in handling to avoid contact with the skin. The directions on the container should be followed to ensure safe handling and best results. Air Force personnel should refer to TO 1-1-8 for authorized chemical paint removers. Whenever a chemical paint remover has been used, the surface should be thoroughly washed with fresh water and detergent prior to any paint application.

CHAPTER 5
SURFACE TREATMENT

5-1. PURPOSE. The materials, equipment, and techniques described in this chapter are intended to assist the avionic technician at the Organizational/Unit and Intermediate Maintenance Activity (IMA) in treating exposed metal surfaces on avionic equipment. Chemical conversion coatings, protective coatings (paints), encapsulants, and sealants are discussed.

5-2. CHEMICAL CONVERSION COATINGS. Chemical conversion treatment is an extremely important part of the corrosion control process. Properly applied chemical treatments impart considerable corrosion resistance to the basic metal and greatly improve the adhesion of subsequently applied paints. Refer to Volume II for information on applying chemical conversion coatings.

WARNING

Chemical film materials are strong oxidizers and a fire hazard when in contact with organic materials such as paint thinners. Do not store or mix surface treatment materials in containers previously containing flammable products. Rags contaminated with chemical film materials should be treated as hazardous materials and disposed of accordingly.

5-2.1. ALUMINUM ALLOYS. The application of chemical conversion material is covered by MIL-C-5541. For treatment of aluminum alloys, use chemical conversion material, MIL-DTL-81706. Class 1A provides superior corrosion protection. However, Class 3 should be used where low electrical resistance is required, such as mounting of antennas. The bulk chemical conversion materials for aluminum are premixed and require no further adjustment prior to use. The Touch-N-Prep (TNP) pen, Alodine 1132 MIL-DTL-81706 applicators qualify for both Class 1A and Class 3 and are ideal for touching up small surface areas. Use of the TNP pens does not require rinsing or wiping off following application, thereby minimizing hazardous waste generation. Empty pens can be returned to manufacturer for disposal.

5-2.2. MAGNESIUM ALLOYS. Magnesium alloys shall be treated with chemical conversion material, AMS-M-3171, Type VI. Premixed material is available in the magnesium treatment kit (see Volume IV or V).

NOTE

Metal portions of brushes should be wrapped with masking tape prior to applying conversion coating material in order to protect against contamination from the metal of the brush.

CAUTION

Chemical conversion solutions can become contaminated if in contact with glass containers, ferrous metals (other than 300 series stainless steels), or copper alloys. Stainless steel, polyethylene, and polypropylene containers should be used. Discard all contaminated solutions.

Silver Nitrate 9
A-A-59282

WARNING

Silver nitrate, A-A-59282, is corrosive and toxic to eyes, skin, and respiratory tract. Avoid all contact. Skin and eye protection required. Use only in a well ventilated area.

5-2.3. METAL DETERMINATION. Magnesium may be distinguished from aluminum by a spot test with silver nitrate solution.

a. Dissolve a few crystals (approximately ¼ teaspoon) of Silver Nitrate, A-A-59282 (Volume IV or V, Chapter 2) in approximately one ounce (2 tablespoons) of distilled water.

b. Select or make a clean bare metal spot and place a drop of solution on it. If the area turns black, the material is magnesium. Aluminum shows no reaction.

c. In the event Silver Nitrate, A-A-59282 is not available, use Silver Nitrate Solution (Volume IV or V, Chapter 2).

d. Place one drop of the solution on the bare metal. If the area turns black, the metal is magnesium.

5-3. PROTECTIVE COATINGS.

NOTE

For information on procedures and equipment to be utilized for paint stripping, conversion coating, pre-paint preparation, paint mixing, and paint application techniques, refer to Volume II of this manual (Navy), TO 1-1-8 (Air Force), or TM 55-1500-345-23/TB 43-0118 (Army).

5-3.1. GENERAL. Protective coatings are susceptible to damage by handling, accidental scratching, and corrosion. The function of boxes, chassis, housings, and frames are to enclose, protect and secure the vital internal components of any avionic unit. Therefore, it is important that this structural integrity be maintained at the Intermediate Maintenance Activity (IMA) by the proper application of protective coatings.

5-3.1.1. Painted Surfaces. Painted surfaces on avionic equipment will withstand a normal amount of abrasion from handling and hand tools. However, chipped, scraped, scratched, and scuffed surfaces of protective paint will cause the base metal of the structure to become corrosion prone. The avionic technician in the Organizational/Unit Maintenance Activity shall pay particular attention to the mishandling of hand tools and avionic equipment. A few minutes of extra time spent in the careful use of tools will save hours of paint touchup and corrosion removal work. When properly applied, these coatings will prolong the useful life of the base material protecting it from corrosion and harmful agents. Any painting operation involves three basic steps:

a. Surface preparation.

b. Application of primer and/or undercoat.

c. Application of one or more finish/topcoats.

Compound, Corrosion Preventative, MIL-DTL-85054 26

5-3.1.2. Minor Paint Damage. Minor paint film damage occurs via chipping, scratching, and abrasion. Use Corrosion Preventative Compound, MIL-DTL-85054 (Volume IV or V, Chapter 2), for temporary protection from corrosion. Long-term repair of the damaged area is achieved by touch-up painting.

5-3.1.3. Extensive Paint Damage. Extensive paint damage requires stripping of old paint, cleaning, conversion coating, priming and/or undercoating, and applying topcoat(s). Personnel should refer to Volume II of this manual (Navy), TO 1-1-8 (Air Force), or TM 55-1500-344-23 (Army) for paint stripping procedures.

5-3.2. PAINT MATERIALS. The paint materials available for use on avionic equipment are as follows:

NOTE

Epoxy Primers, MIL-PRF-85582 and MIL-PRF-23377, are issued in two-part kits. Mix only the materials from the same kit (brand and batch number of both cans should be the same). Follow mixing instructions printed on the cans.

5-3.2.1. Primers.

a. Water Reducible Epoxy Primer, MIL-PRF-85582 (Volume IV or V, Chapter 2), is used to improve topcoat adhesion and provide a corrosion inhibited undercoating. This two-part material should be mixed and applied over properly prepared surfaces in accordance with procedures contained in Volume II of this manual (Navy), TO 1-1-8 (Air Force), or TM 55-1500-345-23 (Army).

b. Primer Coating, Epoxy Polyamide, MIL-PRF-23377 (Volume IV or V, Chapter 2), is used to improve topcoat adhesion and provide a corrosion inhibited undercoating. This two-part material should be mixed and applied over properly prepared surfaces in accordance with procedures contained in Volume II of this manual (Navy), TO 1-1-8 (Air Force), or TM 55-1500-345-23 (Army).

5-3.2.2. Topcoat. The topcoat is the final or finish coat applied over the primer. Selection of topcoat color, when equipment is refinished, shall be based on the normal equipment location.

a. For Navy applications, the topcoat shall be Topcoat, Polyurethane, Aircraft, MIL-PRF-85285 Type I (Volume IV, Chapter 2). Cockpit equipment shall be coated with Flat Black, Color Number 37038 (Volume IV, Chapter 2). Alternate use of Flat Medium Gray, Color Number 36231 (Volume IV, Chapter 2) is acceptable as

appropriate. Unless otherwise specified, equipment shall be coated with Flat Medium Gray, Color Number 36231 (Volume IV, Chapter 2). Equipment markings shall be replaced with Stencil Marking Set (Volume IV, Chapter 3), and Coating Aircraft Touchup, MIL-PRF-81352 (Volume IV, Chapter 2), in appropriate color.

b. For Army applications, the topcoat shall be Coating, Aliphatic Polyurethane, Chemical Agent Resistant, MIL-C-46168 (Volume IV, Chapter 2).

c. Air Force personnel should refer to TO 1-1-8 for proper color and paint systems. MIL-PRF-85285 is the preferred topcoat for Air Force avionic equipment.

5-3.2.3. Thinners. Thinners are volatile solutions used to thin or reduce paint to the desired consistency. The type of thinner that may be used and the recommended quantity are usually stated on the paint container.

WARNING

Prolonged breathing of vapors from organic solvents or materials containing organic solvents is dangerous. Refer to DOD Instruction 6050.5-LR, OPNAVINST 5100.23, TB MED 502/DLAM 1000.2, or AFOSH STD 48. When in doubt, contact the local Safety Officer.

5-3.2.4. Local air pollution regulations may restrict the use of many coatings and thinners in some areas. Thinner Aliphatic Polyurethane, MIL-T-81772 (Volume IV or V, Chapter 2), may be used to thin MIL-PRF-23377, MIL-PRF-22750, MIL-C-46168, and MIL-PRF-81352 coatings. MIL-PRF-85582 shall be thinned as specified by the manufacturer.

5-3.3. APPLICATION OF COATING. The method used to apply or touch-up paint systems or apply preservatives depends on the extent of the job, materials, tools, facilities, and time available. Spraying is faster than other methods and results in a smoother surface finish. However, the time and labor required to set up spray equipment may not be justified by the amount of work to be done or if extensive masking is required. Brushes or rollers are used where the use of spray guns is Impractical or unsuitable. All painting procedures and operations will be completed in accordance with Volume II of this manual (Navy), TO 1-1-8 (Air Force) or TM 55-1500-345-23 (Army).

5-4. ENCAPSULANTS.

5-4.1. GENERAL. Encapsulants are materials used to cover a component or assembly in continuous organic resin. Encapsulants provide electrical insulation, resistance to corrosion, moisture, and fungus, and mechanically support the components. In military avionic equipment, encapsulants are classified as follows:

a. Potting compounds used to seal electrical connectors, plugs, and receptacles.

b. Conformal coatings used to encapsulate PCBs and modules. Refer to NAVAIR 01-1A-23 (Navy) or TO 00-25-234 (Air Force).

c. Fungus proof coatings, usually varnish, used to encapsulate certain avionic circuit components in a thin protective film that is impervious to fungus attack. Usually used in older macroelectronic and electrical components.

NOTE

Refer to NAVAIR 01-1A-505 (Navy), TO 00-25-234 (Air Force), or TM 55-1500-323-24 (Army) for additional information and application procedures on potting compounds.

5-4.2. POTTING COMPOUNDS. Potting compounds are used for their moisture-proof and reinforcement properties. They are used on electrical connectors to protect against fatigue failures caused by vibration and lateral pressure at the point of wire contact with the pin. Potting compounds also protect electrical connectors from corrosion, contamination, and arcing by the exclusion of moisture, stray particles, and aircraft liquids (hydraulic fluid, fuel, and oil).

5-4.2.1. Materials. The following materials shall be used for “potting” electrical connectors.

NOTE

Potting compounds shall comply with the requirements of specifications MIL-PRF-8516 and MIL-A-46146, except where substitutes are specifically authorized by the cognizant engineering authority.

a. Sealing Compound, Synthetic Rubber, Accelerated, MIL-PRF-8516 (Volume IV or V,

Chapter 2), is a two-part synthetic rubber compound. It consists of a base and an accelerator (curing agent) packaged together. It is used for sealing low voltage electrical connectors, wiring, and other electrical apparatus, where temperature does not exceed 200°F (93°C). Verify maximum temperatures in high temperature locations such as engine bays, keel areas, or areas adjacent to bleed air ducts prior to use.

b. RTV, MIL-A-46146 (Volume IV or V, Chapter 2), is used for sealing electrical connectors electronic components where a more flowable, one-part material is required.

c. Sealing Compound, MIL-PRF-81733 (Volume IV or V, Chapter 2), is used to prevent entry of corrosive environments.

d. Molding and Potting Compound, MIL-M-24041 (Volume IV or V, Chapter 2) is a two-component polyether polyurethane system consisting of a prepolymer and a curing agent before mixing. These compounds are flexible cold-flow and cold-resistant materials with excellent electrical properties and are intended for use in a seawater environment. This compound will adhere to metal, rubber, or polyvinyl-chloride, and may be used for the sealing and reinforcement of electrical connectors, wiring and other electrical apparatus. This compound is used to seal connectors located in areas where the temperature range is -80°F to +300°F.

NOTE

Electrical connectors should be examined for evidence of potting compound deterioration (reversion). If soft, spongy, doughy, viscous, or flowing conditions exist, the connector shall be replaced in accordance with NAVAIR 01-1A-505 (Navy), TO 00-25-234 (Air Force), or TM 55-1500-323-24 (Army).

5-4.2.2. Reverted Potting Compounds. Depending on the environment, potting compounds, such as Pro-Seal 777 (green) and EC-2273 (black), are known to revert to a liquid after a year or two. Compounds that revert exhibit a sticky, oozing consistency that flows out of the connector. In some cases, the reverted potting compounds flow around through the pins and receptacles, insulating the connections where continuity is required.

5-4.2.3. Precautions. When using potting compounds the following precautions shall be followed:

a. Apply potting compounds only to thoroughly clean surfaces.

b. Follow instructions carefully when mixing the base compound and accelerator. Substitution, partial mixing, or incorrect proportions of base compound and accelerator may produce a sealant with inferior properties.

c. Do not mix base compounds and accelerator components of different batch numbers because substandard electrical properties may result.

d. Potting compounds may contain small quantities of flammable solvents, and/or release by-products on curing. Adequate ventilation and fire precautions are required during mixing, curing, and/or storage of potting compounds.

e. Potting compounds that have exceeded normal shelf life are not to be used unless retested and certified.

f. Avoid the use of masking tape and fiberboard molds. If potting molds are not furnished with connector or are not available, a plastic sleeve should be constructed. This will aid in forming the potting compound around the connector shell.

g. Allow potting compounds to cure until firm prior to installing connectors or components in equipment.

h. Frozen, premixed, potting compounds should be used as soon as possible after the removal from the deep freeze or a significant (approximately 50 percent) reduction in work life can be experienced.

i. Remove reverted potting compounds as soon as possible.

5-4.3. FUNGUS-PROOF COATINGS. Fungus-proof coatings should not be applied indiscriminately to all electronic components. Treat only those components that have been treated or are specified in the applicable service directives. Fungus-proof coatings can, in some instances, be detrimental to the function/maintenance of equipment. For example, it deteriorates wire insulation and its removal is labor intensive. The IMA shall retreat the entire surface only when touch-up procedures will not provide protection to the item. Considering the difficulties of applying a fungusproof coating, it is important to recognize that if the coating is not maintained properly, many hours of additional repair time will be required.

5-4.3.1. Fungus-Proof Varnish. The authorized fungusproof coating is Varnish, ASTM D3955 (Volume IV or V, Chapter 2). If necessary, the varnish may be thinned with Thinner, A-A-3007 (Volume IV or V, Chapter 2).

5-4.3.2. Items to be Protected Against Varnish Application. Varnish shall not be applied to any surface where it interferes with the operation/performance of the equipment. Such surfaces shall be protected against varnish application by masking with Pressure Sensitive Tape, SAE-AMS-T-22085 Type II (Volume IV or V, Chapter 2). The following items shall be protected.

a. Components and Materials.

(1) Cable, wire, braids, and jackets that are flexed during operation of the equipment.

(2) Cables where treatment would reduce the insulation resistance below, or increase the loss factor above, the acceptable values. These values are specified in the applicable service directives.

(3) Variable capacitors (air, ceramic, or mica dielectric).

(4) High wattage and wirewound resistors.

(5) Ceramic insulators that are subject to an operating voltage of over 600 volts and in danger of flashover.

(6) Painted, lacquered, or varnished surfaces, unless otherwise specified.

(7) Rotating parts such as dynamotors, generators, and motors. However, electronic components associated with these parts shall be treated in accordance with procedures outlined in this manual.

(8) Waveguides (working surfaces).

(9) Electron tubes.

(10) Tube clamps

(11) Miniature tube shields.

(12) Plug-in relays.

(13) Pressure-contact grounds.

(14) Coaxial test points or receptacles.

(15) Windows or lenses.

(16) Transparent plastic parts.

(17) Plastic materials such as polyethylene, polystyrene, polyamide, acrylic, silicone, epoxy (other than printed wiring boards) melamine-fiber-glass, fluorocarbon, vinyl, and alkyd.

(18) Materials used for their specific arcresistant properties and classified as such.

b. Electrical contacts, contact portions, or mating surfaces of binding posts. Also connectors, fuses, jacks, keys, plugs, and relay sockets (including tube sockets, switches and test points).

c. Mechanical parts.

(1) Bearing surfaces (including bearing surfaces of gaskets and sliding surfaces).

(2) Gear teeth and gear trains or assemblies.

(3) Pivots and pivot portions of hinges, locks, etc.

(4) Screw threads and screw adjustments (those moved in the process of operation or adjustment).

(5) Springs, except at base of pile-up.

d. Surfaces which rub together for electrical or magnetic contact. For example, bearings, contact fingers, potentiometers, shafts, shields, and variable autotransformers.

e. Surfaces whose operational temperatures exceed 266°F (130°C) or whose operating temperatures will cause carbonization or smoking.

f. The exterior or visible outside portion of indicating instruments (do not open or treat inside), control boxes, or equipment that are mounted in the cockpits of aircraft.

5-4.3.3. Methods of Application. The varnish coating shall be applied by spraying, brushing, dipping, or any combination. The dried film shall have a clear, smooth

finish (free from bubbles, wrinkles, filaments, or spray dust). The running, lumping, or gathering of the film into drops shall be avoided. Where practical, the dry film thickness shall be at least 0.002 inch.

CAUTION

Varnish, ASTM D3955, shall be applied only on clean, dry surfaces when the temperature is less than 100°F (38°C).

NOTE

All surfaces to be coated shall be free of dirt, grease, and other foreign matter. Components that cannot be cleaned satisfactorily or that show evidence of corrosion should be replaced by acceptable components.

a. Spraying. For larger equipment, a pressure pot spray gun with a tip regulated to give a wet spray is recommended. For small compact equipment, a pencil spray tip, regulated to give a narrow wet spray, is recommended. The varnish shall be applied in a wet coat over all parts to prevent the formation of fuzz or filaments. A dry spray which forms spray dust shall not be used. The equipment or individual assembly shall be sprayed from as many angles as necessary to assure complete coverage with a wet coat. If more than one coat of varnish is applied, sufficient drying time should be allowed between each coat.

b. Brushing. All parts which cannot be reached by spray shall be coated as completely as practicable with a brush. A brush may also be used to cover small areas not covered during the spraying process. On those components requiring extensive masking, brush application of the coating material may prove more efficient than spray application.

c. Dipping. Subassemblies or components may be coated by dipping, provided all requirements are met.

5-4.3.4. Drying of Coated Equipment. Equipment coated with varnish shall be dried by heating to 130°F (54°C). Heating shall be gradual to prevent shrinking, cracking, warping, or other deterioration of the parts or materials. The drying temperature should be maintained for at least ½ hour but not longer than 3 hours. Drying may be done in a vented oven, vacuum oven, or with Hot Air Gun, A-A-59435 (Volume IV or V, Chapter 3 (shop use only)).

WARNING

Components that are to be enclosed in airtight cases should be allowed to air-dry at least 24 hours after varnish dries. Fumes may accumulate to dangerous levels in the containers and be ignited by sparks.

5-4.3.5. Special Precautions. When varnish is to be applied on certain types of equipment, special precautions are required. The following is a list of equipment and parts requiring special precautions:

a. Radio Receivers and Transmitters. The application of varnish will cause changes in some of the circuit constants. These changes may be discernible only by electrical tests and measurements. A change in alignment may be noted immediately after application of the varnish. As the varnish dries and ages, further changes in circuit constants may take place. The greatest change ordinarily will occur within 72 hours after treatment. The set should be completely realigned at the end of that period.

b. Coil Shields. When coil shields are removed and replaced, they can be damaged and alter the tuning adjustments. If the damage is great, proper alignment is impossible. Extreme care must be exercised in removing and replacing coil shields.

c. Trimmer Capacitors. Avoid spraying or brushing varnish on the plates of trimmer capacitors. To minimize damage, all trimmer capacitors should be completely covered during coating. If these capacitors fail to operate satisfactorily after treatment, make a thorough inspection for deposits of varnish.

d. Tuning Slugs. Extreme care must be taken in removing and replacing tuning slugs. If varnish is accidentally applied to a slug, remove it before replacing the slug.

e. Discriminator Circuits. Careful adjustment of discriminator circuits after treatment is essential, especially in the case of frequency-modulated receivers. Discriminator circuits are more susceptible to changes in circuit constants caused by varnish than other part.

f. Tuned Circuits. Be especially careful during masking to ensure that wires associated with tuned circuits are not moved. Movement of such wires may cause changes in circuit values.

g. Relays. Deposits of varnish on the armature, pivots, or similar components will cause the relays to bind. The whole relay should be carefully masked until after spraying has been completed. A brush should be used to coat the coils and leads after the masking has been removed. Relays with palladium-tipped contacts should be removed before application of varnish.

h. Meters. Since meters are easily damaged by a the varnish spray treatment, all meters must be checked for accuracy before treatment. Some meters may be affected by heat. In other instances, meter magnets may be affected by magnetic fields that exist around drying equipment. Refer to the applicable service directives for instructions on varnish spray treatment of meters. If guidance is not available, do not apply varnish.

5-5. SEALANTS FOR AVIONICS. Sealants are another type of protective film used in avionic equipment. Sealants are usually liquid or paste, which solidify after application. They form a flexible seal, preventing moisture intrusion at mechanical joints, spot-welds, and threaded closures. In addition, sealants prevent entry of corrosive environments to faying surfaces, fastener areas, exposed landing gears switches, and other metal-encased avionic equipment. They function principally as waterproof barriers. It is therefore very important that damaged sealants be repaired as soon as possible.

NOTE

For application procedures of Sealing Compound, MIL-PRF-81733, refer to Volume II of this manual.

5-5.1. TYPES OF SEALANTS. The following sealants shall be used on avionic equipment:

a. Sealing Compound, Low Temperature Curing, MIL-S-83318 (Volume IV or V, Chapter 2), is a quick cure sealant used for sealing gaps and depressions on areas during extreme cold activities. Apply with Brush, Typewriter, A-A-3077 Style T (Volume IV or V, Chapter 3).

b. Adhesive-Sealant, Silicone, RTV, Noncorrosive, MIL-A-46146 (Volume IV or V, Chapter 2), is used for sealing avionic equipment in areas where temperatures are between 250°F (121°C) to 600°F (315°C). It is used for encapsulating and sealing of electrical and electronic components. This material has good resistance to oxidation, weathering, and water.

c. Sealing Compound, MIL-PRF-81733 (Volume IV or V, Chapter 2), can be used to seal gaps, seams, and faying surfaces with temperatures up to 250°F (121°C). This material is applied by brush.

d. Conformal Coating. For information on procedures and equipment used to apply conformal coatings, refer to NAVAIR 01-1A-23 (Navy) and TO 00-25-234 (Air Force).

CAUTION

A large number of RTV silicone sealants contain an acetic acid curing agent. These sealants, in contact with metal, result in rapid corrosion. RTV sealants that contain acetic acid are not authorized for use on electronic or electrical circuit. They may be identified in most cases by a vinegar odor while in a liquid or curing state.

5-5.2. SEALANT CONTAINING ACETIC ACIDS. Table 5-1 lists some of the RTV silicone sealants considered corrosive. These sealants shall not be used in avionic equipment.

Table 5-1. Corrosive Silicone Sealants, Adhesives, and Coatings

RTV 102	RTV 192	RTV 999	RTV 92-055
RTV 103	RTV 198	RTV 1890	RTV 94-002
RTV 106	RTV 236	RTV 3144	RTV 94-003
RTV 108	RTV 730	RTV 20-046	RTV 94-009
RTV 109	RTV 731	RTV 20-078	RTV 94-034
RTV 112	RTV 732	RTV 30-079	RTV 96-005
RTV 116	RTV 733	RTV 30-121	RTV 96-080
RTV 118	RTV 734	RTV 4-2817	RTV 96-081
RTV 140	RTV 736	RTV 90-092	RTV Q3-6069
RTV 142	RTV 780	RTV 92-005	RTV Q3-6090
RTV 154	RTV 781	RTV 92-007	RTV Q4-2817
RTV 156	RTV 784	RTV 92-009	RTV 92-010
RTV 157	RTV 785	RTV 92-018	SCS 101
RTV 158	RTV 786	RTV 92-024	RTV 159
RTV 891	RTV 92-048		

NOTE
RTV 730 is a high temperature (550° to 600° F) corrosive sealant that may be required to seal engine compartment electrical connectors. RTV 730 shall be used only when specified by the cognizant engineering authority.

THIS PAGE LEFT INTENTIONALLY BLANK

CHAPTER 6
TREATMENT OF SPECIFIC AREAS

6-1. GENERAL. All aircraft electrical/electronic units must be opened and inspected for evidence of internal moisture and corrosion. When corrosion is detected, prompt corrective action is required. This action shall consist of cleaning, corrosion removal, treatment, and preservation, where required. Maintenance personnel should always use the mildest method available to remove corrosion. The procedures and techniques of corrosion removal outlined in the following paragraphs are intended to assist avionic technicians in equipment repair. In each case, some discretion on the part of maintenance personnel is warranted. It is important that personnel analyze the problem, select the appropriate corrective action, and confirm corrosion control effectiveness. It is recommended that Volume I be reviewed for basic information on what avionic corrosion is, why it occurs, and the various forms it can take.

6-2. REPAIR OF AVIONIC EQUIPMENT HOUSING, MOUNTING, AND STORAGE HARDWARE.

6-2.1. BILGE AREAS. A common trouble spot on all aircraft is the bilge area, especially in helicopters. These areas contain all types of avionic equipment and present a natural sump or collection point. Accumulation of waste, hydraulic fluids, water, dirt, loose fasteners, drill shavings and other debris is typical. Liquids shall be pumped or drained from bilge areas. Bilge areas should be cleaned before equipment replacement. All efforts should be made to ensure that avionic equipment is cleaned and preserved before being returned to these areas. Bilge areas shall be cleaned and preserved in accordance with Volume II (Navy and Army) or TO 1-1-691 (Air Force).

6-2.2. EQUIPMENT BAYS. Avionic equipment bays and installed equipment are highly susceptible to corrosion. This is especially true in helicopters and aircraft using external ram air cooling. The avionics technician should routinely survey the inside of equipment bays whenever he/she is working in these areas, and report evidence of any corrosion. The inspection and treatment processes are outlined in the following paragraphs.

NOTE

The use of dissimilar metals in the selection of screws, washers, and nuts should be eliminated wherever possible. Refer to paragraph 6-4 for information on bonding and grounding hardware.

a. Clean and inspect hardware, fixed mountings, and points of metal bonds for signs of galvanic corrosion. Pay particular attention to areas of dissimilar metal.

b. Remove corrosion with Abrasive Cloth, ANSI-B 74.18 320 Grit Type I Class I (Volume IV or V, Chapter 2), or Abrasive Mat A-A-58054 Type I (Volume IV or V, Chapter 2).

Compound, Aircraft Cleaning 4
MIL-PRF-85570

c. Clean affected areas with a solution of nine parts fresh water to one part Aircraft Cleaning Compound MIL-PRF-85570 Type II (Volume IV or V, Chapter 2). Apply with Cleaning Cloth CCC-C-46 Class 7 (Volume IV or V, Chapter 2).

d. Rinse with fresh water and wipe dry with Cleaning Cloth CCC-C-46 Class 7 (Volume IV or V, Chapter 2).

Coating, Chemical Conversion 10
MIL-DTL-81706

CAUTION

Exercise care when using Chemical Conversion Material, MIL-DTL-81706, near electronic hardware. It can cause corrosion of the delicate electronic devices if they are not suitably protected.

e. After corrosion is removed, aluminum surfaces shall be treated with Chemical Conversion Material,

MIL-DTL-81706. (Volume IV or V, Chapter 2), and painted in accordance with Volume II (Navy and Army) and Chapter 5. Air Force personnel should refer to equipment specific manuals for proper color and paint systems.

Compound, Corrosion Preventive 3
Water-Displacing
MIL-C-81309

Compound, Corrosion Preventive 26
MIL-DTL-85054

f. When environmental conditions or time do not permit other surface treatment, preserve with a thin film of Water Displacing Corrosion Preventive Compound, MIL-C-81309 Type II (Volume IV or V, Chapter 2) or Corrosion Preventive Compound, MIL-DTL-85054 Clear (Amlguard) (Volume IV or V, Chapter 2).

6-2.3. ENGINE COMPARTMENTS. Remove corrosion and preserve as follows:

a. Inspect the compartment, hardware, electrical connectors, terminal boards, junction boxes, and ram air turbine for signs of salt spray contamination and corrosion.

b. Treat in accordance with paragraph 6-2.2. with the following exceptions.

(1) Treat electrical connectors in accordance with paragraphs 6-3.11. through 6-3.11.4.

Compound, Corrosion Preventive 3
Water-Displacing
MIL-C-81309

(2) Treat terminal boards in accordance with paragraph 6-2.8. Preserve internal surfaces and terminals with a thin film of Water Displacing Corrosion Preventive Compound, MIL-C-81309 Type III (Volume IV or V, Chapter 2).

(3) Treat ram air turbine in accordance with the applicable service directives.

6-2.4. BATTERY COMPARTMENTS, BOXES, AND ADJACENT AREAS. The battery, battery cover, battery box, and adjacent areas (especially areas below the battery compartment) are subject to the corrosive action of the electrolyte. Two different types of batteries are encountered on avionic equipment, lead acid type (sulfuric acid electrolyte) and nickel-cadmium type (potassium hydroxide electrolyte).

NOTE

Refer to NAVAIR 17-15BAD-1 (Navy) or TM 11-614S203-14-2 (Army) for additional information on maintenance of aircraft batteries.

6-2.4.1. Preparation of Solutions for Cleaning and Neutralizing Battery Electrolytes. Indicating solutions are required for cleaning areas subjected to electrolyte spills. These solutions determine the location of contaminated areas and indicate when these areas have been completely neutralized. Use a 10% sodium bicarbonate (ordinary baking soda in water) solution to neutralize sulfuric acid from lead acid batteries and a 3% boric acid (in water) solution to neutralize potassium hydroxide from nickelcadmium batteries.

Alcohol, Isopropyl 6
TT-I-735

WARNING

Sulfuric acid and battery electrolytes are highly toxic to eyes, skin, and respiratory tract. Avoid all contact. Skin and eye protection is required. If any acid/ electrolyte contacts the skin or eyes, flood the affected area immediately with water and consult the Base Medical Service. Emergency shower and eye wash station are required. Use only with adequate ventilation. Assure this operation has been reviewed by local Bioenvironmental Engineer.

When working around batteries, always wear eye protection (face shield), acid resistant rubber apron and gloves.

6-2.4.1.1. Litmus Indicating Solution. Litmus indicating solutions are used on lead acid battery electrolyte spills. Make one pint of a mixture containing 70% Isopropyl Alcohol, TT-I-735 (Volume IV or V, Chapter 2)

and 30% distilled water, both by volume, and put into a plastic spray bottle with a hand squeeze pump. Add one tablespoon of litmus powder into the liquid, and mix thoroughly until a deep blue color is observed. Blue litmus paper (Volume IV or V, Chapter 2) may also be used as an indicator.

6-2.4.1.2. Bromothymol Blue Indicating Solution. Bromothymol blue indicating solutions are used on nickel-cadmium battery electrolyte spills. To prepare solution, mix ¼ teaspoon of Indicator, Bromothymol Blue Reagent (Volume IV or V, Chapter 2) in 3 cups (24 oz.) of deionized or distilled water. Pour one pint of bromothymol blue solution into a plastic spray bottle with a hand squeeze pump. Using an eye dropper, add one drop at a time of phosphoric acid, A-A-59282, (Volume IV or V, Chapter 2), into the solution. Mix after adding each drop, until the color of the solution changes from blue to gold/amber.

6-2.4.1.3. Sodium Bicarbonate Neutralizing Solution. Pour one pint of fresh water into a wash bottle, add two ounces (4 tablespoons) of Sodium Bicarbonate, ASTM D 928 (Volume IV or V, Chapter 2) and mix thoroughly.

6-2.4.1.4. Boric Acid Neutralizing Solution. Pour one pint of fresh water into a wash bottle, add one-half ounce (I tablespoon) of Boric Acid, A-A-59282 (Volume IV or V, Chapter 2) and mix thoroughly.

6-2.4.2. Cleaning and Neutralizing Procedures.

a. Remove any standing liquid or puddles with a squeeze bulb type syringe, absorbent cloth, or sponges. Place these items in a leak-proof container for removal to prevent the contamination of other areas.

b. Spray the entire suspected area with the proper indicator solution, using the minimum amount needed to wet the entire surface. For spills from lead acid batteries, use the litmus solution, which will change in color from deep blue to a bright red in areas contaminated by sulfuric acid. For spills from nickel-cadmium batteries, use the bromothymol blue solution, which will change in color from amber or gold to a deep blue in areas contaminated by potassium hydroxide.

c. Apply the correct neutralizing solution (sodium bicarbonate solution for lead acid batteries, boric acid solution for nickel-cadmium batteries) to the areas where the indicating solution has changed color. Ensure that the area is well saturated and that the stream is directed into all seams and crevices where electrolyte could collect. Use care to prevent liquids from spreading to adjacent areas, and ensure that bilge area drains are open to allow fluids to flow overboard. Allow the neutralizing solution to remain on the surface for at least 5 minutes or until all bubbling action ceases.

d. Rinse the area thoroughly with a liberal amount of clean water and remove any standing liquid or puddles, as in paragraph a.

e. Reapply the indicator solution, as in paragraph b. If the solution does not change color, rinse the area, as in paragraph d., and dry the area with clean cloths or rags. If the solution changes color, repeat paragraphs c. and d.

f. Repair damage and apply prepaint treatment, sealant, and coatings as required. Special acid and/or alkali resistant coatings are usually required for battery compartments, boxes, and areas. Refer to the applicable aircraft manuals.

6-2.5. FRAMES, MOUNTING RACKS, AND SHOCK MOUNTS. Shock mounts and associated hardware on pod/airframe mounted equipment are usually the last items to be inspected for corrosion damage. This is usually because inspection requires the removal of the shock mount to facilitate examination. For this reason, shock mounts and associated metallic hardware must be preserved to ensure protection. This does not eliminate the requirement to inspect shock mounts. For frames, mounting racks, and shock mounts that are not normally painted, remove corrosion and preserve as follows:

NOTE

The use of dissimilar metals in the selection of screws, washers, and nuts should be eliminated, wherever possible. Refer to paragraph 6-4 for information on bonding and grounding hardware.

a. Remove corrosion with Abrasive Cloth, 320 Grit, ANSI-B74.18 Type I Class I (Volume IV or V, Chapter 2), or Abrasive Mat, A-A-58054 Type I (Volume IV or V, Chapter 2). Pay particular attention to dissimilar metal couples.

Alcohol, Isopropyl 6
TT-I-735

b. Clean affected area with one part Isopropyl Alcohol, TT-I-735 (Volume IV or V, Chapter 2) mixed with one part fresh water. Apply with Cleaning Cloth, CCC-C-46 Class 7 (Volume IV or V, Chapter 2). Pay particular attention to shock mounts that contain rubber shock absorbers. These items may swell if immersed in Isopropyl Alcohol, TT-I-735 (Volume IV or V, Chapter 2), for a long period of time. If rubber does swell, it will return to its normal size after a short period of time.

Compound, Corrosion Preventive 3
Water-Displacing
MIL-C-81309

Compound, Corrosion Preventive 26
MIL-DTL-85054

c. Frames, mounting racks, and shock mount associated metallic hardware shall be preserved with a thin film of Water Displacing Corrosion Preventive Compound, MIL-C-81309 Type II (Volume IV or V, Chapter 2) or Corrosion Preventive Compound, MIL-DTL-85054, Clear (Amlguard) (Volume IV or V, Chapter 2).

d. For frames, mounting racks, and shock mounts that are normally painted, remove corrosion and clean as outlined in paragraphs a. through c. Paint these areas in accordance with Volume II (Navy). Air Force personnel should refer to equipment specific manuals for proper color and paint systems. Army personnel shall refer to TM 55-1500-345-23 and TB 43-0118.

6-2.6. EXTERNAL POD MOUNTED EQUIPMENT. External avionic pods are susceptible to the same corrosive environment as the airframe. Cleaning techniques are the same with the exception of electromagnetic gaskets, shields, electrical connectors, and mating surfaces. Treat as follows:

NOTE

Refer to the applicable service directives for information on those areas of external pod mounted avionic equipment that may be preserved without degrading the electrical characteristics of the equipment. Do not preserve water seal gaskets.

Refer to Chapter 7 and the applicable service directives for information on electromagnetic gasket plating where the plating surfaces have been removed.

a. Remove corrosion and clean in accordance with paragraph 6-2.7.

b. Paint as required by equipment specific manuals.

Compound, Corrosion Preventive 3
Water-Displacing
MIL-C-81309

Compound, Corrosion Preventive 26
MIL-DTL-85054

c. If painting cannot be accomplished, preserve external surfaces with a thin film of Water Displacing Corrosion Preventive Compound, MIL-C-81309 Type II (Volume IV or V, Chapter 2) or Corrosion Preventive Compound, MIL-DTL-85054, Clear (Amlguard) (Volume IV or V, Chapter 2).

d. Clean and preserve electrical connectors in accordance with paragraphs 6-3.11. through 6-3.11.4.

e. Clean and preserve wire harnesses in accordance with paragraph 6-3.13.

6-2.7. COCKPIT AND CONTROL BOXES. Use Vacuum Cleaner, MIL-V-21987 (Volume IV or V, Chapter 3), to vacuum the cockpit area clean. The following inspection and treatment procedures shall apply to cockpit avionic components.

a. Inspect control box units for corrosion and contaminants. Pay particular attention to switches, dials, knobs and electrical connectors.

b. Remove corrosion products from metal surfaces with Abrasive Mat, A-A-58054 Type I (Volume IV or V, Chapter 2), or Cleaning and Polishing Pad, Non-Abrasive (Volume IV or V, Chapter 2) as appropriate.

Solvent, Degreasing 7
MIL-PRF-680

c. Clean affected area with Degreasing Solvent, MIL-PRF-680 Type III (Volume IV or V, Chapter 2). Apply with Cleaning Cloth, CCC-C-46 Class 7 (Volume IV or V, Chapter 2).

Alcohol, Isopropyl 6
TT-I-735

d. Follow with application of one part Isopropyl Alcohol, TT-I-735 (Volume IV or V, Chapter 2), to one part deionized water. Wipe clean with Cleaning Cloth, CCC-C-46 Class 7 (Volume IV or V, Chapter 2).

e. Paint as required by equipment specific manuals.

Compound, Corrosion Preventive 3
Water-Displacing
MIL-C-81309

WARNING

Do not use Corrosion Preventive Compounds, MIL-C-81309, MIL-DTL-85054 or MIL-PRF-16173, or Lubricating Oil, General Purpose Preservative, MIL-PRF-32033, around oxygen or oxygen fittings since fire/ explosion may result. Corrosion Preventive Compounds, MIL-C-81309 and MIL-L-87177 are flammable and toxic.

CAUTION

Corrosion Preventive Compounds may cause cracking or crazing of plastics.

f. Brush or spray Water Displacing Corrosion Preventive Compound, MIL-C-81309 Type II (Volume IV or V, Chapter 2), on metal surfaces and wipe with cleaning cloth, CCC-C-46 Class 7 (Volume IV or V, Chapter 2). Take steps not to get preservative on plastic faceplate.

g. Clean and preserve toggle, rotary, and pushbutton switches in accordance with paragraph 6-3.7.

Detergent, General Purpose 5
MIL-D-16791

h. Clean control box faceplates with solution of one (1) ounce (2 tablespoons) Detergent, Liquid, Nonionic, MIL-D-16791 Type I (Volume IV or V, Chapter 2), in one (1) gallon of fresh water. Apply and wipe with Flannel Cloth, CCC-C-458 Type II (Volume IV or V, Chapter 2). Polish glass with clean flannel cloth.

i. Clean and preserve cockpit and control box electrical connectors in accordance with paragraphs 6-3.11.1. through 6-3.11.4.

6-2.8. TERMINAL BOARDS, JUNCTION BOXES, RELAY BOXES, AND CIRCUIT BREAKER PANELS. Remove covers and access panels. Treat as follows:

WARNING

Ensure that all electrical power is disconnected from the aircraft and all electrical systems in the aircraft are deactivated. Disconnect all batteries.

a. External surfaces:

(1) Treat in accordance with paragraph 6-2.2.

(2) Prepare surface and paint in accordance with Volume II (Navy), TO 1-1-8 (Air Force), and TM 55-1500-345-23 and TB 43-0118 (Army).

Compound, Corrosive Preventive 26
MIL-DTL-85054

(3) When environmental conditions or time do not permit painting, preserve with a thin film of Corrosion Preventive Compound, MIL-DTL-85054, Clear (Amlguard) (Volume IV or V, Chapter 2).

b. Internal Components:

(1) Remove corrosion with Cleaning and Polishing Pad, Non-Abrasive (Volume IV or V, Chapter 2) or Abrasive Mat, A-A-58054 Type I (Volume IV or V, Chapter 2), as appropriate.

Alcohol, Isopropyl 6
TT-I-735

(2) Clean affected area with one part Isopropyl Alcohol, TT-I-735 (Volume IV or V, Chapter 2), mixed with one part deionized water. Apply with Cleaning Cloth, CCC-C-46 Class 7 (Volume IV or V, Chapter 2), Brush, Acid, A-A-289 (Volume IV or V, Chapter 3), or Brush Typewriter, AA-3077 (Volume IV or V, Chapter 3).

(3) Wipe clean and allow to air dry.

(4) Clean and preserve electrical connectors in accordance with paragraphs 6-3.11. through 6-3.11.4.

Compound, Corrosion Preventive 3
Water-Displacing
MIL-C-81309

(5) Coat internal surface by applying a thin film of Water Displacing Corrosion Preventive Compound, Ultra-Thin Film, MIL-C-81309 Type III (Volume IV or V, Chapter 2), to all electrical connections, terminals, and internal surfaces. Avoid the application of preservatives on relay and circuit breaker contacts.

6-2.9. METALLIC EQUIPMENT COVERS AND HOUSINGS. Avionic equipment cases, covers, housings, and associated hardware are usually exposed to harsher elements than internal circuit components. As a result, they require more frequent cleaning. Treat any corrosion in accordance with paragraph 6-2.2.

a. Hardware associated with equipment housings and cases that are not normally painted should be preserved. Preserve as often as necessary, depending on the operating environment. Materials and procedures specified in the appropriate Maintenance Requirement Cards (MRCs) or Phased Maintenance Inspection Checklist may be used as alternatives.

b. Hinges and latches on equipment covers shall be preserved in accordance with paragraph 6-2.11.

6-2.10. NONMETALLIC COVERS AND HOUSINGS. In some cases avionic equipment, support equipment, or general purpose test equipment use high impact plastic or fiberglass covers and housings. These should be cleaned as follows:

a. The primary cleaning method shall be cleaning track CSR2A or CSR3 (as applicable). Refer to Table 2-3.

b. The Secondary Cleaning Method.

(1) Inspect hardware, hinges and points of metal bonds for signs of galvanic corrosion. Pay particular attention to dissimilar metals. Remove any corrosion with Cloth Abrasive, ANSI-B74.18 Type I Class I (Volume IV or V, Chapter 2), or Abrasive Mat, A-A-5 8054 Type I (Volume IV or V, Chapter 2).

Compound, Aircraft Cleaning 4
MIL-PRF-85570

(2) Clean cover and housing with a solution of nine parts fresh water to one part Aircraft Cleaning Compound, MIL-PRF-85570 Type II (Volume IV or V, Chapter 2). Apply with Cleaning Cloth, CCC-C-46 Class 7 (Volume IV or V, Chapter 2).

(3) Rinse with fresh water and wipe dry with Cleaning Cloth, CCC-C-46 Class 7.

(4) Allow to air dry, if necessary.

(5) Hardware associated with test equipment housings and covers that is not normally painted should be preserved as often as necessary, depending on the operating environment. Do not preserve water seal gaskets.

(6) Equipment hinges and latches shall be preserved in accordance with paragraph 6-2.11.

6-2.11. EQUIPMENT HINGES AND LATCHES. Inspect hinges and latches on black boxes, access doors, covers or housings, for corrosion and condition of preservatives/ lubricants. Treat as follows:

Solvent, Degreasing 7
MIL-PRF-680

a. Clean affected areas with Cleaning Cloth, CCC-C-46 Class 7 (Volume IV or V, Chapter 2) dampened with Degreasing Solvent, MIL-PRF-680 Type III.

b. Remove corrosion with Abrasive Mat, A-A-58054 Type I Grade A or B (Volume IV or V, Chapter 2) or Abrasive Cloth 320 Grit (Volume IV or V, Chapter 2), as appropriate.

Alcohol, Isopropyl 6
TT-I-735

c. Wipe residue with Cleaning Cloth, CCC-C-46 Class 7 (Volume IV or V, Chapter 2) dampened with Isopropyl Alcohol, TT-I-735 (Volume IV or V, Chapter 2), and allow to dry.

Coating, Chemical Conversion 10
MIL-DTL-81706

CAUTION

Exercise care when using Chemical Conversion Material, MIL-DTL-81706, near electronic hardware. It can cause corrosion of the delicate electronic devices if they are not suitably protected.

d. After corrosion is removed, aluminum surfaces shall be treated with Chemical Conversion Material MIL-DTL-81706 Class IA (Volume IV or V, Chapter 2), in accordance with Volume II (Navy or Army) or TO 1-1-691 (Air Force) and paragraphs 5-3.1.1. and 5-3.1.2.

Compound, Corrosion Preventive 26
MIL-DTL-85054

e. Prepare bare metal non-moving parts requiring no lubrication in accordance with Volume II (Navy and Army) or TO 1-1-691 (Air Force). When environmental conditions or time do not permit, preserve surfaces requiring no lubrication with a thin film of Corrosion Preventive Compound, MIL-DTL-85054, Clear (Amlguard) (Volume IV or V, Chapter 2).

WARNING

Do not use Corrosion Preventive Compounds, MIL-C-81309, MIL-DTL-85054, MIL-PRF-16173, or Lubricating Oil, General Purpose Preservative, MIL-PRF-32033, around oxygen or oxygen fittings since fire/ explosion may result.

Compound, Corrosion Preventive 3
Water-Displacing
MIL-C-81309

f. Spray hinges and latches with Water Displacing Corrosion Preventive Compound, Ultra-Thin Film, MIL-C81309 Type II (Volume IV or V, Chapter 2).

Oil, Lubricating 20
General Purpose
MIL-PRF-32033

g. Apply Lubricating Oil, General Purpose Preservative, MIL-PRF-32033 (Volume IV or V, Chapter 2), on moving parts.

6-2.12. SHELVES, BULKHEADS, AND CREVICES. Inspect shelves, bulkheads, crevices and corners for signs of corrosion. Examine these areas for deteriorated paint that is cracked, chipped, or peeled. Treat in accordance with paragraph 6-2.2.

6-2.13. MOISTURE TRAPS AND CAVITY AREAS. Inspect for moisture traps and cavity areas at rear of equipment shelves. Treat in accordance with paragraph 6-2.2.

Sealing Compound 2
Corrosion Inhibitive
MIL-PRF-81733

a. If necessary, before painting fill depression areas and cavities with Sealing Compound, MIL-PRF-81733 (Volume IV or V, Chapter 2).

b. Apply sealing compound and finish in accordance with Volume II (Navy and Army) or TO 1-1-691/TO 1-1-8 (Air Force).

6-2.14. COCKPIT INDICATOR AND MOUNTING HARDWARE. Inspect cockpit indicator and mounting hardware for dirt, dust, and corrosion. Treat as follows:

a. Remove corrosion and clean in accordance with paragraph 6-2.7.

b. Clean indicator faces in accordance with paragraph 6-2.7.f. Polish glass with clean flannel cloth.

c. Where required, replace decal in accordance with the applicable service directives.

Compound, Corrosion Preventive 3
Water-Displacing
MIL-C-81309

Compound, Corrosion Preventive 26
MIL-DTL-85054

d. Apply Water Displacing Corrosion Preventive Compound, MIL-C-81309 Type II (Volume IV or V, Chapter 2) or Corrosion Preventive Compound, MIL-DTL-85054, Clear (Amlguard) (Volume IV or V, Chapter 2), on mounting hardware.

e. Touch up all bare metal in the cockpit area with the appropriate coating system.

NOTE

For additional information on bonding and grounding straps, refer to paragraph 6-4 and the applicable service directives.

6-2.15. ELECTRICAL BONDING AND GROUNDING STRAPS. The bonding and grounding straps used on aircraft and avionic equipment are a major source of galvanic corrosion. In most cases, the bonding or grounding strap is made of a metal that is dissimilar to the mating surface. This creates a galvanic couple that in the presence of moisture will corrode rapidly. Treat in accordance with paragraphs 6-5 through 6-5.3.

6-3. REPAIR OF AVIONIC SYSTEMS, EQUIPMENT, AND COMPONENTS.

6-3.1. ANTENNA SYSTEMS. Antenna systems are normally exposed to fairly severe environments. Without adequate corrosion protection, these systems can fail via shorts, open circuits, loss of dielectric strength, signal attenuation, poor bonding, or electromagnetic interference (EMI). Structural damage to the aircraft can also result. Antennas mounted on the fuselage require openings in the skin to route the various lines to the antenna. The area around the antenna mounting is susceptible to moisture intrusion from rain, condensation, aircraft washing, and internal fluids (e.g., fuel, engine oil, or hydraulic fluid) Antennas mounted on the lower fuselage are particularly corrosion prone. The inspection and treatment process are outlined in the following paragraphs.

NOTE

Instructions on recognizing corrosion are outlined in Volume I. If corrosion is beyond the surface stage (i.e. pitting and cracking), refer to Volume II (Navy and Army) or TO 1-1-691 (Air Force) for assessment/treatment techniques.

6-3.1.1. Corrosion Visual Inspection. A visual check of the antenna mounting base metal surface can reveal signs of corrosion attack. Corrosion deposits are the most obvious indication that an attack has taken place. Since antennas are usually mounted on aluminum structural materials, corrosion (deposits of aluminum oxide) generally can be identified as a white or greyish-white powder.

NOTE

Antenna radomes and covers shall be repaired in accordance with NAVAIR 01-1A-22 (Navy) or TO 1-1-24 (Air Force).

6-3.1.2. Antenna Mounting Area Preparation Procedures. When corrosion is visually apparent, corrective action is necessary to prevent any further deterioration. Corrosion treatment involves stripping finishes from the corroded area, removal of corrosion products, cleaning, and restoration of the surface protective finish. The procedures to be used on the antenna base and mating aircraft structure for corrosion removal, cleaning, and mounting preparations are as follows:

Solvent, Degreasing 7
MIL-PRF-680

a. Remove dirt, oil, and grease from contact surfaces of the antenna and aircraft skin by wiping with Cleaning Cloth, CCC-C-46 Class 7 (Volume IV or V, Chapter 2), dampened with Degreasing Solvent, MIL-PRF-680 Type III (Volume IV or V, Chapter 2), in order to evaluate the extent of corrosion damage.

NOTE

A nonmetallic tool for sealant removal may be made from plastic material as shown in Figure 6-1.

b. Remove any existing sealant with a nonmetallic sealant removal tool or Radial Bristle Disc, 3" in diameter (yellow in color) (Volume IV or V, Chapter 3).

WARNING

Utilization of the Radial Bristle Disc generates dust particles that may contain chromates from primers. Therefore, eye protection and respiratory protection is required when operating this tool. Consult with the local industrial hygienist (IH) concerning proper personal protection equipment.

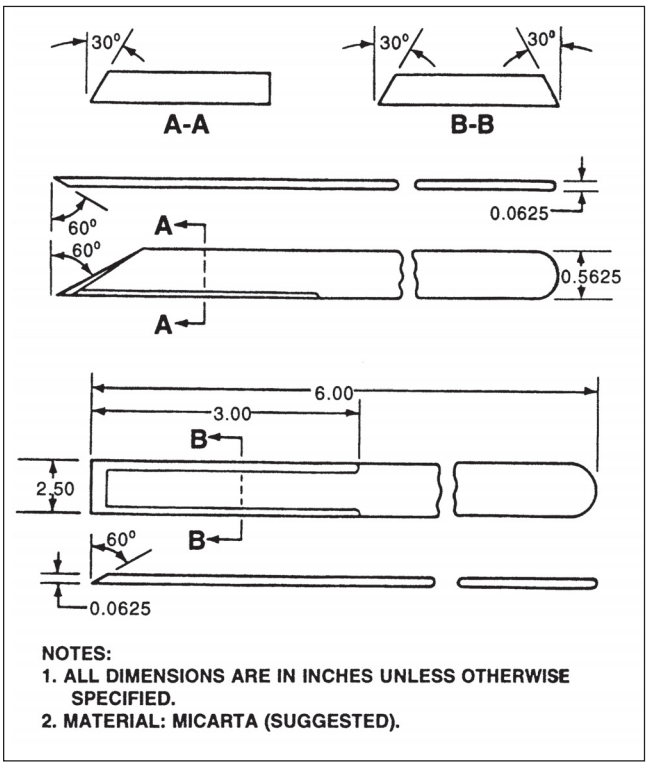

Figure 6-1. Nonmetallic Sealant Removal Tool

CAUTION

Radial Bristle Discs are authorized for use only on aluminum, high strength steel, and titanium surfaces. Utilization of the discs on composite surfaces, including fiberglass, may result in fiber damage.

c. Remove paint and corrosion from the aircraft surface and antenna mounting area in accordance with Volume II (Navy and Army) or TO 1-1-691 (Air Force), with the radial bristle disc being the preferred removal method.

Compound, Aircraft Cleaning 4
MIL-PRF-85570

d. Thoroughly clean treated area with Cleaning Cloth, CCC-C-46 Class 7 (Volume IV or V, Chapter 2), moistened with Cleaning Compound, MIL-PRF-85570 Type II, (Volume IV or V, Chapter 2) (Air Force can use MIL-PRF-87937 Type II or IV (Volume IV or V, Chapter 2)) using dilution of nine (9) parts water to one (1) part cleaner. Rinse thoroughly until a water

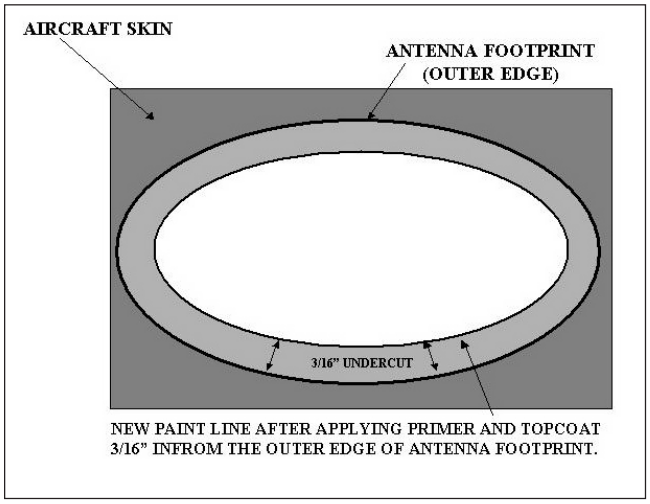

Figure 6-2. Paint Line After Application of Primer and Topcoat

break-free surface is obtained. Allow to air dry. If water break-free surface is not obtained, reclean area with dilution of four (4) parts water to one (1) part cleaner. Rinse thoroughly to obtain a water break-free surface and allow to air dry.

e. Where corrosion products were abrasively removed, apply Chemical Conversion Coating, MIL-DTL-81706 Class 3 to the affected surfaces. The Alodine Touch 'N Prep Pen (Volume IV or V, Chapter 2) is the preferred treatment method. If the Touch 'N Prep Pen is used, only one coat should be applied and the treated surface does not require rinsing or wiping off and can be air or forced air dried. Allow coated surfaces to dry before proceeding. See Volume II and Chapter 5 for chemical conversion material procedures.

f. (N)(A) Apply appropriate primer and topcoat to the exposed bare metal surrounding the antenna and extending 3/16" under the outer edge of the antenna footprint. This coating will provide added corrosion protection to the perimeter of the antenna base if the gasket or perimeter seal deteriorates over time. Figure 6-2 shows paint line after application of primer and topcoat.

g. (AF) Inspect the area to ensure there is no bare metal extending beyond the outer edge of the antenna mounting surface and extending 3/16" inward from the outer edge of the antenna footprint. If bare metal exists in this area, apply appropriate primer before attaching the antenna. This primer will provide added corrosion protection to the aircraft structure at the perimeter of the antenna should there be any misalignments or miscuts of the gasket. Primer may be applied with a Sempen, brush, small roller, or other approved application process. Refer to weapon system specific TO or TO 1-1-8 for primer selection and application processes.

NOTE

(Navy) AVDEC gasket installation requires authorization from the cognizant type/model/series engineering authority for the aircraft.

6-3.1.3. Antenna Mounting (Air Force Preferred Method). These procedures are applicable to all rigid, flush, and dome antennas except in accordance with aircraft specific technical manuals. Even though the mounting bases of antennas vary in shape and size, the following installation procedures are typical and shall be used on all antennas allowing the use of a gasket.

a. Prepare aircraft corresponding mating surface (skin) and antenna mounting surface (area) in accordance with section 6-3.1.2, paragraphs a. through g.

b. Remove conductive gasket from the protective packaging. Exercise caution not to fold or bend the material. Verify that fastener holes and connector cutouts in the gasket will align with the antenna mount when positioned for installation. Remove release film only from the side of the gasket marked "antenna side" and position over the antenna base. Beginning at one side or the corner of the antenna, place gasket into position, carefully aligning gasket fastener holes with antenna base fastener holes. Release film should remain on exposed "aircraft side" of gasket until immediately prior to antenna installation to the aircraft surface. Figure 6-3 shows removal of the release films prior to installation on the aircraft.

CAUTION

Do not open the sealant material package until it is ready for use. Follow the manufacturer's instructions on the application syringe for priming and mixing. Discard the syringe if it has been removed from the package for more than 24 hours, as sealant performance may be compromised.

c. If antennas are located in areas where oil, grease, or fuel could pool near antenna connectors (normally

on the underside of the aircraft), the connector bases should be sealed with Self-Leveling Green Sealant (Volume IV or V, Chapter 2) in accordance with the following procedure.

(1) To keep antenna level, use a locally fabricated holding fixture. This can be made from the bottom of a cardboard box.

(2) Insert the antenna through the hole in the holding fixture.

(3) Ambient temperature shall be a minimum of 50°F prior to priming, mixing and applying Self-Leveling Green Sealant (Volume IV or V, Chapter 2). Apply sealant around the base of the antenna connector(s) until level with the conductive gasket, and allow the sealant to cure for 30 minutes. Figure 6-4 shows application of the self-leveling green sealant.

d. Clean and prepare aircraft antenna connectors and cables in accordance with section 6-3.11.

e. Mate connectors/cables in accordance with the applicable aircraft TO/MIM/TM and apply corrosion protective materials. For antenna connectors/cables, the preferred method of protection against corrosion is to seal mated connectors using Stretch Seal Connector Tape (Volume IV or V, Chapter 2). The stretch seal connector tape cannot be used if the aircraft cutout hole is not at least ¼ inch greater in diameter than the connector diameter. A tight wrap is necessary to ensure a proper seal. To apply stretch seal to antenna connectors/cables, begin at the base of the antenna connector and, removing release film as necessary, wrap the wet side of the tape around the mated connector with a 50% overlap while stretching the release tape 25% to 50% ensuring a tight wrap. Coverage shall be from the base of the antenna connector to at least ½ inch beyond the connector and onto the insulation jacket of the coaxial cable. Apply cable spot tie or string tie immediately above and below the mated connector to secure the free ends of the tape to ensure it does not unravel. Figure 6-5 shows the finished application of the stretch seal protective wrap. If connector wraps are not available or inappropriate, apply a film of Water Displacing Corrosion Preventive Compound, MIL-C-81309 Type III (Volume IV or V, Chapter 2) (Air Force can use MIL-L-87177 Grade B as an alternate) to the shell or exterior of the mated connector.

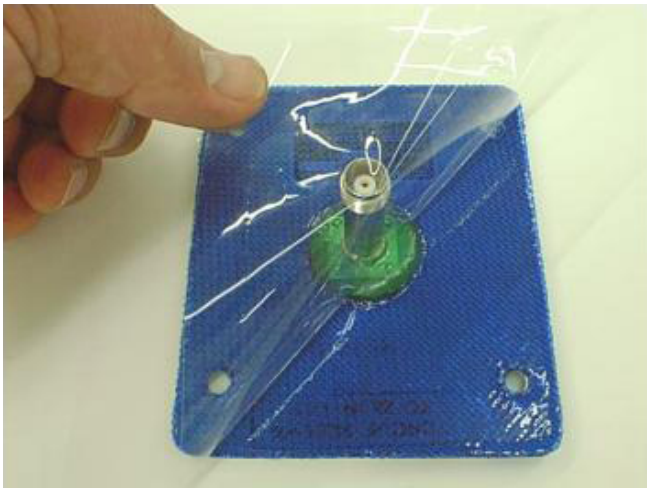

Figure 6-3. Removal of Release Film From Gasket

Figure 6-4. Application of Self-Leveling Green Sealant

Figure 6-5. Stretch Seal Protective Wrap Applied to Antenna Connector

Figure 6-6. Typical Gel Squeeze-Out Around Perimeter of Antenna

f. Perform the electrical resistance test in accordance with paragraph 6-3.1.12. after the antenna is fully installed or the ground installation is assembled. The test shall take place prior to applying outer edge sealant, if applicable.

g. Inspect antenna mounting fasteners to ensure that the countersink taper area of each fastener head is clean and free of corrosion. If not, use new fasteners. Apply thin film of Water Displacing Corrosion Preventive Compound, MIL-C-81309 Type III (Volume IV or V, Chapter 2), (Air Force can use MIL-L-87177 Grade B as an alternate) to fastener threads prior to installation.

h. Remove release film from the "aircraft side" of the gasket. Pre-position at least two fasteners through the antenna base and gasket. Align fasteners at correct locations on the aircraft surface. Hand tighten each fastener one or two turns to hold the antenna in place on the aircraft. Install remaining fasteners and secure antenna to aircraft by torquing each fastener in accordance with specific aircraft TO/MIM/TM. Figure 6-6 shows an antenna and typical gel squeeze-out around the perimeter of the antenna base, after the antenna has been installed.

i. For maximum corrosion protection, apply an outer edge seal, Thixoflex Gray Sealant (Volume IV or V, Chapter 2), with 50 cc Injectable Sealant Application Dispenser (Volume IV or V, Chapter 3). Or, for maximum corrosion protection and resistance to aircraft fluid attack on the gasket apply an outer edge seal, SAE-AMS-3277 Fast Cure Sealant (Volume IV or V, Chapter 2), using Spatula, A-A-277 (Volume IV or V, Chapter 3), or Sealant Gun (Volume IV or V, Chapter 3) with nozzle (Volume IV or V, Chapter 3) and retainer sleeve (Volume IV or V, Chapter 3) if using 2½ oz. cartridge. Mix sealants in accordance with manufacturer instructions and form a fillet of sealing compound around outside edge of antenna base to form a water tight seal.

j. Check electrical resistance as specified by applicable aircraft TO/MIM/TM. If no other instructions apply, use paragraph 6-3.1.12.

Compound, Corrosion Preventive 8
MIL-PRF-16173

k. Cover antenna fastener heads with a thin film of MIL-PRF-16173 Grade 4, Corrosion Preventive Compound (Volume IV or V, Chapter 2).

6-3.1.4. Alternate Method for Rigid Antenna Mounting. This method may be used when conductive gaskets (see paragraph 6-3.1.3.) are not authorized or available. The following installation procedures, including application of corrosion prevention measures and attachment of the antenna to the airframe structure, are typical and may be used for mast-type antennas (blade, spike, whip base, or long wire mast base).

a. Prepare aircraft skin and antenna mounting area in accordance with paragraph 6-3.1.2.a. through g. Remove anodized coating from countersink areas on new antennas.

Coating, Chemical Conversion 10
MIL-DTL-81706

b. Apply Chemical Conversion Coating, MIL-DTL-81706 Class 3 (Volume IV or V, Chapter 2) with Alodine Touch 'n Prep Pen as preferred method, to bare countersink areas in accordance with the procedure described in Volume II and Chapter 5. If the Touch 'n Prep Pen is used, only one coat should be applied and the treated surface does not require rinsing

or wiping off and can be air or forced air dried. Allow coated surfaces to dry before proceeding.

Compound, Corrosion Preventive 8
MIL-PRF-16173

c. Apply an even coating of Corrosion Preventive Compound, MIL-PRF-16173 Grade 4 (Volume IV or V, Chapter 2) to both the aircraft skin surface and antenna mast base. Avoid getting the material in the base countersink areas. Wipe any Corrosion Preventive Compound from the conversion coated countersink using a Cleaning Cloth, CCC-C-46 Class 7 (Volume IV or V, Chapter 2) dampened with water and Cleaning Compound, MIL-PRF-85570 Type II, (Volume IV or V, Chapter 2) and allow to air dry. Air Force can use Cleaning Compound, MIL-PRF-87937 Type II or IV (Volume IV or V, Chapter 2).

d. Position the antenna base. Ensure countersink area is clean under fastener heads. Install antenna and torque fasteners in accordance with specific aircraft maintenance manuals.

e. Check electrical resistance in accordance with accordance with applicable aircraft TO/MIM/TM. If no other instructions apply, use paragraph 6-3.1.12.

Alcohol, Isopropyl 6
TT-I-735

f. Clean the outside edge of the antenna attachment area and fastener heads with a Cleaning Cloth, CCC-C-46 Class 7 (Volume IV or V, Chapter 2), moistened with Isopropyl Alcohol, TT-I-735 (Volume IV or V, Chapter 2) and allow to air dry.

Sealing Compound 2
Corrosion Inhibitive
MIL-PRF-81733

g. Using Spatula, A-A-277 (Volume IV or V, Chapter 3) or Sealant Gun (Volume IV or V, Chapter 3) with Nozzle (Volume IV or V, Chapter 3) and Retainer Sleeve (Volume IV or V, Chapter 3) if using 2½ oz. sealant cartridge, form a fillet of Sealing Compound, MIL-PRF-81733 (Volume IV or V, Chapter 2) around the outside edge of the antenna/mast base to form a water tight seal.

Compound, Corrosion Preventive 8
MIL-PRF-16173

h. Cover fastener heads with Corrosion Preventive Compound, MIL-PRF-16173 Grade 4 (Volume IV or V, Chapter 2).

i. Allow sealant to cure for 30 minutes, then remove excess sealant from aircraft skin using a nonmetallic scraper shown in Figure 6-1.

6-3.1.5. Alternate Method for Flush or Dome Antenna Mounting. This method is to be used when conductive gaskets (see paragraph 6-3.1.3.) are not available, or when not permitted by aircraft specific technical manual. These antennas usually are installed on aircraft as part of the primary structure. The radiating elements of the antenna and fiberglass cover are normally individual units. The procedures for protecting these antennas are:

NOTE

Antenna cover damage shall be repaired in accordance with NAVAIR 01-1A-22 (Navy) and TO 1-1-24 (Air Force).

a. Clean and remove corrosion from the antenna installation areas in accordance with paragraph 6-3.1.2.a.-g.

Compound, Corrosion Preventive 3
Water-Displacing
MIL-C-81309

b. Install antenna in accordance with the applicable service directives. Prior to attaching dome or cover, spray a coating of Water Displacing Corrosion Preventive Compound, MIL-C-81309 Type III (Volume IV or V, Chapter 2), on the internal areas of the connector. Mate the connector and apply Water Displacing, Corrosion Preventive Compound, MIL-C-81309 Type II (Volume IV or V, Chapter 2), over the antenna mounts, the outside of the mated

antenna connectors, and all other exposed metallic hardware, including anchor nuts, and nut plates.

Sealing Compound 2
Corrosion Inhibitive
MIL-PRF-81733

c. Install dome or cover. With Spatula, A-A-277 (Volume IV or V, Chapter 3), apply a uniform coating of Sealing Compound, MIL-PRF-81733 (Volume IV or V, Chapter 2), over the junction of fiberglass cover and aircraft skin. Ensure sealant also covers fastener heads to form a watertight seal.

NOTE

For antennas with EMI gaskets, place sealant around the outer edge (periphery) of the gasket to prevent the entry of moisture. Ensure no sealant gets between the conductive EMI gasket and the contacting skin, since the sealant is an insulator.

d. Allow the sealant to cure for one-half hour, then remove excess sealant from the aircraft skin area around the antenna using a nonmetallic scraper shown in Figure 6-1.

6-3.1.6. Radar Dish Antenna Corrosion Preventive Procedure. One of the primary problems related to dish antennas is that the protective finish on the dish is subject to scratching and chipping. This usually occurs in the process of normal handling and maintenance. The antenna metal is usually aluminum or magnesium. Since both metals are anodic to the attaching hardware, the dish is potentially subject to galvanic corrosion around the hardware. In addition, the antenna is subject to surface corrosion wherever the finish is damaged. Depending upon facilities, deployment, and other factors, either refinishing or a temporary protection procedure is appropriate. Refer to Volume II (Navy or Army) or TO 1-1-691/TO 1-1-8 (Air Force) for procedures for stripping, cleaning, and refinishing. Refinishing is normally justified only in the case of general finish damage (at least 20% of the antenna area).

CAUTION

There are some radar antennas that have a protective finish or covering, such as mylar, placed over the aluminum/magnesium base metal. Refer to the applicable service directives for further information and repair procedures on these antennas.

6-3.1.7. Temporary Radar Dish Antenna Protection. This procedure is appropriate for repair of limited damage to the finish of a dish antenna. It is also appropriate for touch-up type use. Organizational/Unit or Intermediate level activities shall perform the following procedure:

a. Remove surface corrosion with Abrasive Mat, A-A-58054 Type I (Volume IV or V, Chapter 2).

Alcohol, Isopropyl 6
TT-I-735

b. After completion of corrosion removal, clean the area with Isopropyl Alcohol, TT-I-735 (Volume IV or V, Chapter 2). Apply by wiping area with solvent dampened Cleaning Cloth, CCC-C-46 Class 7 (Volume IV or V, Chapter 2), or spray application.

c. Allow to air dry.

Compound, Corrosive Preventive 26
MIL-DTL-85054

d. Spray a coating of Water Displacing, Corrosion Preventive Compound, MIL-DTL-85054, Clear (Amlguard) (Volume IV or V, Chapter 2), over the affected areas. Unless the repaired area is subject to significant abrasion or erosion, this coating will provide relatively long term corrosion protection (at least one year).

6-3.1.8. Radar Antenna Associated Hardware. For protection of the radar antenna associated hardware, such as nuts, bolts, screws and washers, utilize the following procedure:

Alcohol, Isopropyl 6
TT-I-735

NOTE

Replace nuts, bolts, screws and washers which have the protective coating (normally cadmium) worn off. Refer to the applicable service directives for information on replacement parts.

a. Clean hardware with Isopropyl Alcohol, TT-I-735 (Volume IV or V, Chapter 2), using a Cleaning Cloth, CCC-C-46 Class 7 (Volume IV or V, Chapter 2).

b. Allow to air dry.

c. If corrosion is present but replacement is not practical, surface corrosion on hardware may be removed with an Abrasive Mat, A-A-58054 Type I (Volume IV or V, Chapter 2). Repeat paragraphs a. and b. after corrosion removal.

Compound, Corrosion Preventive 3
Water Displacing
MIL-C-81309

d. Spray a coating of Water Displacing, Corrosion Preventive Compound, MIL-C-81309 Type II (Volume IV or V, Chapter 2), over cleaned hardware after installation.

6-3.1.9. Antenna Connectors. Antenna connectors require special procedures to avoid moisture entry and corrosion damage. Corrosion is, by far, the principal cause of antenna performance deterioration. Clean and preserve antenna connectors, both multi-pin and coaxial, in accordance with paragraphs 6-3.11. through 6-3.11.4.

6-3.1.10. UHF/VHF/ADF Antenna Sealing. The location of UHF/VHF/ADF antennas is normally on the lower fuselage. This results in a particularly severe corrosion problem due to fluids in the bilge area. This has been the principal cause of maintenance requirements on these antennas. The following preventive procedures shall be utilized to minimize this problem.

Solvent, Degreasing 7
MIL-PRF-680

a. With antenna removed, clean grease, oil, and dirt from aircraft mounting areas with Cleaning Cloth, CCC-C-46 Class 7 (Volume IV or V, Chapter 2), dampened with Degreasing Solvent, MIL-PRF-680 Type III (Volume IV or V, Chapter 2).

NOTE

For corrosion beyond the surface stage, refer to Volume II (Navy and Army) or TO 1-1-691 (Air Force).

b. Remove any surface corrosion present with Abrasive Mat, A-A-58054 (Volume IV or V, Chapter 2) or Abrasive Cloth, 320 Grit, ANSI-B74.18 (Volume IV or V, Chapter 2).

Alcohol, Isopropyl 6
TT-I-735

c. Wipe clean the corrosion products from the antenna and aircraft mounting areas with a Cleaning Cloth, CCC-C-46 Class 7 (Volume IV or V, Chapter 2), dampened with Isopropyl Alcohol, TT-I-735 (Volume IV or V, Chapter 2).

d. Allow to air dry.

e. Normally the antenna is assembled with the dust cover mated to the bottom of the antenna casting. The antenna cavity is installed inside the casting. A plate, called an antenna element, mates to the antenna cavity flange under a plastic plate. During assembly of the antenna components, discard the extruded rubber dust cover channel which fits between the dust cover edge and the antenna casting. Clean the circumference of the mated dust cover and antenna casting by wiping with a Cleaning Cloth, CCC-C-46 Class 7 (Volume IV or V, Chapter 2) dampened with Isopropyl Alcohol TT-I-735 (Volume IV or V, Chapter 2). Similarly, clean around the circumference of the plastic plate which mates to the antenna cavity, and the top of the fasteners on the dust cover.

Sealing Compound 2
Corrosion Inhibitive
MIL-PRF-81733

f. Seal the junction of dust cover, antenna cavity and casting outer edge with Sealing Compound, MIL-PRF-81733 (Volume IV or V, Chapter 2), applied with Spatula, AA-277 (Volume IV or V, Chapter 3), or Sealant Gun (Volume IV or V, Chapter 3) with Nozzle (Volume IV or V, Chapter 3). Seal around circumference of the plastic plate, antenna cavity, and top of the fasteners on the dust cover.

Compound, Corrosion Preventive 3
Water-Displacing
MIL-C-81309

g. After sealant has cured for one-half hour, install antenna and spray a coating of Water Displacing Corrosion Preventive Compound, MIL-C-81309 Type II (Volume IV or V, Chapter 2), over the antenna mounts.

h. Clean and preserve electrical connectors in accordance with paragraphs 6-3.11. through 6-3.11.4.

Sealing Compound 2
Corrosion Inhibitive
MIL-PRF-81733

i. Seal the circumference of the antenna and aircraft mating surface with Sealing Compound, MIL-PRF-81733 (Volume IV or V, Chapter 2), applied with brush, spatula or sealant gun in accordance with paragraph f.

6-3.1.11. Long Wire/Direction Finder (DF) Sense Antenna Corrosion Prevention Procedures. The cleaning and preservation procedures for this type of antenna are as follows:

a. The corrosion removal and cleaning procedures prior to mounting the antenna mast are described in paragraph 6-3.1.2.

NOTE

If more than surface corrosion is present (for example, pitting), the part should be replaced.

b. Preparation of individual parts involves removal of surface corrosion on the antenna mast, cable shackle, and clevis bolts, using an Abrasive Mat, A-A-58054 Type I (Volume IV or V, Chapter 2).

Alcohol, Isopropyl 6
TT-I-735

c. Clean dirt, oil, grease, and any residue by wiping the parts with a Cleaning Cloth, CCC-C-46 Class 7 (Volume IV or V, Chapter 2), dampened with Isopropyl Alcohol, TT-I-73 5 (Volume IV or V, Chapter 2).

d. Allow to air dry.

e. Assemble parts and install long wire/DF antenna by referring to the applicable service directives for attachment and tensioning instructions.

Compound, Corrosion Preventive 3
Water-Displacing
MIL-C-81309

NOTE

It is preferable to apply Water Displacing, Corrosion Preventive Compound, MIL-C-81309 Type II, to new bare wire after the antenna is installed/tensioned. If access to the wire after installation makes this impractical, wet wiping the wire with MIL-C-81309 Type II can be performed prior to installation. In such a case, attempt to minimize flexing, coiling or abrasion of the wire after the MIL-C-81309 Type II is applied and before the wire is installed/tensioned.

f. With the antenna installed, spray a coating of Water Displacing, Corrosion Preventive Compound, MIL-C-81309 Type II (Volume IV or V, Chapter 2), over the attaching hardware. If a new bare wire (no nylon sleeving) has been installed, wipe wire with a Cleaning Cloth, CCC-C-46 Class 7 (Volume IV or V,

Chapter 2), soaked with the Water Displacing, Corrosion Preventive Compound, MIL-C-81309 Type II, so the fluid can penetrate around the individual strands.

g. To prevent moisture from entering the insulator, fill the space around the wire where it enters the insulator with Room Temperature Vulcanizing, Adhesive Sealant, RTV 3140, Clear, MIL-A-46146 (Volume IV or V, Chapter 2). Seal both ends of the insulator in this manner.

6-3.1.12. Antenna Bonding/Grounding Connection Electrical Resistance Test. The electrical resistance test is performed after an antenna base is mounted or ground installation is assembled. The test shall take place prior to applying sealant, if applicable. Proper torquing of connections , good resistance readings, and complete sealing are all essential to ensure a connection will function reliably in field service.

CAUTION

It is essential that the probe be placed against bare metal when taking the reading. The rotating probe tips will create bare metal contact when pressed into the surface.

6-3.1.12.1. Using a milliohm meter, such as the R1-LE milliohm meter, conduct an electrical resistance-bonding test to measure resistance between antenna/equipment base and the aircraft structure. Select a scale on the milliohmmeter such that the maximum allowable reading (2.5 millohms) is near mid-range. This will to ensure maximum instrument accuracy.

6-3.1.12.2. The resistance between the antenna base/ equipment to be grounded and aircraft structure shall not exceed 2.5 milliohms.

6-3.2. AVIONIC TEST EQUIPMENT. Precision measurement/ test equipment is required for testing, troubleshooting, and repairing modern avionic systems. This makes the reliability of these test systems in any environment critical for aircraft flight and mission essential functions. Aircraft operational requirements often result in short turnaround repair times for damaged/malfunctioning avionic equipment. This provides the avionic technician little time to troubleshoot, test, and repair an avionic system. Valuable maintenance time is lost if test equipment is not functioning properly. A major source of equipment malfunction is due to corrosion. The corrosion sources that are particularly detrimental to avionic test equipment include:

a. Moisture and fluid intrusion (rain, condensation fuel, or hydraulic fluid).

b. Corrosive elements in the surrounding atmosphere.

c. Malfunctioning or inadequate shop environmental control systems.

d. Malfunctioning or inadequate built-in filter systems.

NOTE

In this section, use of the term "avionic test equipment" shall refer to all aircraft electrical and electronic system test equipment. This includes support equipment, oscilloscopes, signal generators, meters, automatic test equipment (ATE), or any equipment used to perform measurements, test, or troubleshoot avionic systems.

6-3.2.1. Cleaning Versus Calibration. A problem common to all automatic/manual test equipment is the effects dirt, dust, and lint have on equipment calibration. Most test equipment, particularly older units, has not been cleaned periodically. This allows contaminants to collect on components and become an integral part of the circuit, altering circuit parameters. For example, a small amount of dust around a vacuum tube socket can affect circuit parameters. These contaminantinduced changes are compensated for during each recalibration process and can limit the equipment's peak operating efficiency over time. Also, it is easy for calibration of equipment to shift in service when some of the contaminants are dislodged. Because of the effect that contaminants can have on electrical characteristics, it is common for cleaning to significantly affect the electrical performance. Cleaning (and preservation) is mandatory immediately after equipment exposure to any of the following conditions:

a. External exposure to wet weather conditions.

b. Internal exposure to water or any other fluid.

c. Internal or external exposure to fire extinguishing agents.

d. Internal exposure to electrolyte or corrosive deposits from batteries.

6-3.2.2. Support Equipment/General Purpose Test Equipment Covers and Housings. The cleaning, corrosion removal, and preservation of support equipment/general purpose test equipment housings and covers shall be as follows:

NOTE

Prior to cleaning the covers and housings, remove the operator's panel, electrical/electronic components, harnesses, and connectors.

a. Primary Method.

(1) Remove corrosion and clean in accordance with cleaning track BCSR2A5 or BCSR35, as applicable. Refer to Table 2-3.

(2) Remove oil, grease and hydraulic fluid in accordance with cleaning track DBSR2A5 or DBSR35, as applicable. Refer to Table 2-3.

(3) If no corrosion products, oil, grease, or hydraulic fluid exists, clean in accordance with cleaning track CSR2A5 or CSR35, as applicable. Refer to Table 2-3.

b. The secondary method shall be in accordance with paragraph 6-2.2.

c. Prepare surfaces and paint in accordance with Chapter 5 and Volume II.

Compound, Corrosion Preventive 3
Water-Displacing
MIL-C-81309

d. If painting is not practical, temporarily preserve unpainted surfaces with a thin coating of Water Displacing Corrosion Preventive Compound, MIL-C-81309 Type II (Volume IV or V, Chapter 2).

e. Hardware associated with test equipment housings and covers that are not normally painted should be preserved as often as necessary, depending on the operating environment.

f. Equipment cover hinges and latches shall be preserved in accordance with paragraph 6-2.11.

6-3.2.3. ATE Cabinets, Doors and Panels. Cleaning, corrosion removal, and preservation of ATE cabinets, doors, and panels shall be as follows:

NOTE

The use of dissimilar metals in the selection of screws, washers and nuts should be eliminated wherever possible. Refer to paragraph 6-4 and NAVAIR 01-1A-505, NAVAIR 01-1A-1 (Navy); TO 1-1A-14, TO 1-1A-8 (Air Force); or TM 55-1500-323-24 (Army) for information on bonding/grounding hardware.

a. Inspect hardware and points of metal bonds for signs of galvanic corrosion. Pay particular attention to dissimilar metals.

b. Remove any corrosion with Cloth Abrasive, ANSI-B74.18 Type I Class I (Volume IV or V, Chapter 2), or Abrasive Mat, A-A-58054 Type I (Volume IV or V, Chapter 2).

Compound, Aircraft Cleaning 4
MIL-PRF-85570

c. Clean affected areas with a solution of nine (9) parts fresh water to one (1) part Aircraft Cleaning Compound, MIL-PRF-85570 Type II (Volume IV or V, Chapter 2). Apply with Cleaning Cloth, CCC-C-46 Class 7 (Volume IV or V, Chapter 2).

d. Rinse with fresh water and wipe dry with Cleaning Cloth, CCC-C-46 Class 7.

e. If required, aluminum surfaces shall be treated with chemical conversion material in accordance with Chapter 5 and Volume II.

f. Prepare surface and paint in accordance with Chapter 5 and Volume II.

Compound, Corrosion Preventive 26
MIL-DTL-85054

g. If painting is not practical, temporarily preserve unpainted surfaces with a thin coating of Corrosion Preventive Compound, MIL-DTL-85054, Clear (Amlguard) (Volume IV or V, Chapter 2).

h. Hardware associated with test equipment housing and covers that are not normally painted should be preserved as often as necessary, depending on the operating environment. Do not preserve water seal gaskets.

i. Equipment covers, hinges and latches shall be preserved in accordance with paragraph 6-2.11.

6-3.2.4. Battery Compartments. Some support equipment and general purpose test equipment contain internal batteries. Clean, neutralize, and preserve the battery compartment as follows:

a. Clean and neutralize electrolyte spills in accordance with paragraphs 6-2.4.1. through 6-2.4.2. as applicable.

b. Prepare surface and paint in accordance with Chapter 5 and Volume II.

Compound, Corrosion Preventive 3
Water-Displacing
MIL-C-81309

c. If painting is not practical, temporarily preserve the cleaned battery compartment with a thin coating of Water Displacing Corrosion Preventive Compound, MIL-C-81309 Type II (Volume IV or V, Chapter 2).

6-3.2.5. Meters. Voltmeters, ammeters, and multimeters are usually constructed of high impact plastic or acrylic. Normally these meters are not disassembled for cleaning. Clean as follows:

Alcohol, Isopropyl 6
TT-I-735

a. Clean metal hardware and metal surfaces with an application of one part Isopropyl Alcohol, TT-I-735 (Volume IV or V, Chapter 2) to one part fresh water. Wipe clean with Cleaning Cloth, CCC-C-46 Class 7 (Volume IV or V, Chapter 2).

Compound, Corrosion Preventive 3
Water-Displacing
MIL-C-81309

b. Apply Water Displacing Corrosion Preventive Compound, MIL-C-81309 Type II (Volume IV or V, Chapter 2), on metal hardware. Take steps not to get preservative on acrylic plastic faceplates.

c. Clean toggle, rotary and push button switches in accordance with paragraph 6-3.7.

d. Clean meter faceplates in accordance with paragraph 6-2.7.h.

Detergent, General Purpose 7
MIL-D-16791

e. Clean high impact plastic or acrylic housings with solution of one ounce (2 tablespoons) Detergent, Liquid Nonionic, MIL-D-16791 Type I (Volume IV or V, Chapter 2) in one (1) gallon of fresh water. Apply and rub surface clean using Cleaning Cloth, CCC-C-46 Class 7 (Volume IV or V, Chapter 2), that is wet with cleaning solution. When surfaces are clean, remove cleaner residue by wiping with a clean Cleaning Cloth, CCC-C-46 Class 7, that has been frequently rinsed and kept damp with clean water.

6-3.2.6. Operator and Instrument Panels. General purpose test equipment, support equipment, and ATE operator/instrument panels shall be cleaned externally and preserved as follows:

a. Inspect operator and instrument panels for corrosion and contaminants. Pay particular attention to switches, dials, knobs, and hardware.

b. Remove any corrosion from metal surfaces with Abrasive Mat, A-A-58054 Type I (Volume IV or V, Chapter 2), or Cleaning and Polishing Pad, Non-Abrasive (Volume IV or V, Chapter 2).

Alcohol, Isopropyl 6
TT-I-735

c. Clean metal surfaces with one part Isopropyl Alcohol, TT-I-735 (Volume IV or V, Chapter 2) to one part fresh water. Apply with Cleaning Cloth, CCC-C-46 Class 7 (Volume IV or V, Chapter 2).

Compound, Corrosion Preventive 3
Water Displacing
MIL-C-81309

d. Apply Water Displacing Corrosion Preventive Compound, MIL-C-81309 Type II (Volume IV or V, Chapter 2) on metal hardware. Take steps not to get preservative on acrylic plastic faceplates.

e. If required, aluminum surfaces shall be treated with Chemical Conversion Material, in accordance with Chapter 5 and Volume II.

f. Prepare surface and paint in accordance with Chapter 5 and Volume II.

g. Clean and preserve toggle, rotary and pushbutton switches in accordance with paragraph 6-3.7.

h. Clean operator/instrument faceplate in accordance with paragraph 6-2.7.h.

i. Clean and treat light bulb assemblies in accordance with paragraph 6-3.5.

6-3.2.7. Internal Cleaning of Support Equipment. With the exception of emergency procedures assigned to Organizational/Unit Maintenance (refer to Chapter 10), the internal cleaning of support equipment is normally an Intermediate Maintenance Activity function. This cleaning and preservation of support equipment shall be as follows:

CAUTION

The method for internal cleaning of general purpose test equipment, support equipment, and ATE depends on the types of circuit components involved. This includes components like tunable cavities, open transformer housings, variable attenuators, rotary switches, and trim potentiometers that can act as water/solvent traps making drying difficult. Prior to the internal cleaning of manual or automatic test equipment, inspect for components that can act as water or solvent traps.

a. Remove the cover and housing.

b. Inspect for components that can act as water and solvent traps. Refer to Table 2-5 for a list of such components.

c. Seal, bag or remove potential water and solvent traps in accordance with paragraph 2-5.3.6.

d. Remove oil, grease and hydraulic fluid in accordance with cleaning track DBR2A or DB35. Refer to Table 2-3.

e. If components will fit inside Blast Cleaning Cabinet, remove corrosion and clean in accordance with cleaning track WSR2C5 or WSR35, as applicable. Refer to Table 2-3.

f. If no corrosion products, oil, grease, or hydraulic fluid exists, clean in accordance with cleaning track SR2C5 or SR3C5, as applicable. Refer to Table 2-3.

6-3.2.8. Internal Cleaning of General Purpose Test Equipment. Oscilloscopes, signal generators, and frequency counters usually accumulate more dust and dirt than other contaminants. The internal cleaning and preservation of general purpose test equipment shall be as follows:

CAUTION

The method for internal cleaning of general purpose test equipment, support equipment, and ATE depends on the types of circuit components involved. This includes components like tunable cavities, open transformer housings, variable attenuators, rotary switches, and trim potentiometers that can act as water/solvent traps making drying difficult. Prior to the internal cleaning of manual or automatic test equipment, inspect for components that can act as water or solvent traps.

a. Remove the cover and housing.

b. Inspect for components that can act as water and solvent traps. Refer to Table 2-5 for a list of these components.

c. Seal, bag, or remove potential water/solvent traps in accordance with paragraph 2-5.3.6.

d. Use Vacuum Cleaner (Volume IV or V, Chapter 3), to vacuum loose dust, dirt, and lint from the internal chassis/circuit components.

e. If components will fit inside Blast Cleaning Cabinet remove corrosion as clean in accordance with cleaning track WSR2C5 or WSR35, as applicable. Refer to Table 2-3.

f. If no corrosion products exist, clean in accordance with cleaning track SR2C5 or SR3C5, as applicable. Refer to Table 2-3.

g. Preserve in accordance with Chapter 9.

6-3.2.9. Internal Cleaning of ATE. ATE is usually constructed so that circuits are installed in drawers or cabinet-type racks. In most of these installations cleaning the whole drawer or cabinet is difficult because of the weight and size of the assemblies. In such cases, internal cleaning is done by hand. Where the assemblies can be removed and mechanically cleaned, they shall be cleaned and preserved in accordance with paragraph 6-3.2.8. Those assemblies that cannot be removed and mechanically cleaned shall be cleaned and preserved as follows:

CAUTION

The method for internal cleaning of general purpose test equipment, support equipment, and ATE depends on the types of circuit components involved. This includes components like tunable cavities, open transformer housings, variable attenuators, rotary switches, and trim potentiometers that can act as water/solvent traps making drying difficult. Prior to the internal cleaning of manual or automatic test equipment, inspect for components that can act as water or solvent traps.

a. Open cabinet doors, remove cover, and slide drawers to full extended position.

b. Inspect for components that can act as water and solvent traps. Refer to Table 2-5 for a list of these components.

c. Seal, bag, or remove potential water/solvent traps in accordance with paragraph 2-5.3.6.

CAUTION

If wire wrap circuit board construction is used in ATE, do not apply water or solvents. In wire wrap installations only vacuuming of dirt, dust, and lint is authorized. Do not apply preservation materials to wire wrap circuit boards.

d. Use the Vacuum Cleaner, MIL-V-21987 (Volume IV or V, Chapter 3), to vacuum loose dirt, dust, and lint from the internal chassis/circuit components. Avoid direct contact between the vacuum cleaner hose wand and delicate circuit components.

e. Hand clean in accordance with paragraph 2-5.3.12.

f. Air dry, or dry using hot air gun in accordance with paragraph 2-6.4.

g. Preserve in accordance with Chapter 9.

6-3.2.10. Internal Cleaning of Microwave Test Equipment. Microwave equipment contains many potential water/solvent traps. In addition, microwave equipment makes use of many acrylic vanes and lenses in waveguides/cavities, and variable attenuators. Generally, these components can be sealed or removed from the chassis prior to cleaning and drying. The internal cleaning and preservation of microwave test equipment shall be as follows:

a. Clean external surface of waveguides in accordance with paragraph 6-3.3.

b. Clean internal surface of waveguides in accordance with paragraph 6-3.3.

Alcohol, Isopropyl 6
TT-I-735

c. If the waveguide is not going to be reinstalled immediately, seal ends of waveguide sections with appropriate protective caps identified in the applicable service directives or with Pressure Sensitive Tape, SAE-AMS-T-22085 Type II (Volume IV or V, Chapter 2). It is important that all tape residues are removed from all connecting surfaces prior to reassembly of the waveguide. Wipe residue with Cleaning Cloth, CCC-C-46 Class 7 (Volume IV or V, Chapter 2), dampened with Degreasing Solvent, MIL-PRF-680 Type III (Volume IV or V, Chapter 2). Wipe with a Cleaning Cloth, CCC-C-46 Class 7 (Volume IV or V, Chapter 2) dampened with Isopropyl Alcohol, TT-I-735 (Volume IV or V, Chapter 2).

d. Clean connectors as follows:

(1) Disconnect the connector sections.

(2) Remove corrosion from external surfaces with Abrasive Mat, A-A-58054 Type I Grade A (Volume IV or V, Chapter 2). Wipe residue with Cleaning Cloth, CCC-C-46 Class 7 (Volume IV or V, Chapter 2).

Alcohol, Isopropyl 6
TT-I-735

(3) Clean connector sections by spraying internal/external connector areas with Isopropyl Alcohol, TT-I-735 (Volume IV or V, Chapter 2). Do not disturb the center conductor with a cleaning tool or brush.

(4) Wipe excess solvent with Cleaning Cloth, CCC-C-46 Class 7.

(5) Allow to air dry.

Compound, Corrosion Preventive 3
Water-Displacing
MIL-C-81309

CAUTION

Do not apply preservation materials to internal surfaces/areas of waveguides or APC connectors.

(6) Assemble connector sections and preserve the external areas with a thin coating of Water Displacing Corrosion Preventive Compound, MIL-C-81309 Type II (Volume IV or V, Chapter 2).

6-3.2.11. Special Cleaning Procedures. The following microwave circuit components shall be cleaned and preserved as follows:

a. Preserve electrical bonding and grounding straps in accordance with paragraph 6-4.

b. Preserve relays and circuit breakers in accordance with paragraph 6-3.6.

c. Clean rotary switches, trim potentiometers, and sliding cam switches in accordance with paragraph 6-3.7.

Cleaning-Lubricating Compound 21
MIL-PRF-29608

(1) Clean switch using Cleaning-Lubricating Compound, MIL-PRF-29608 (Volume IV or V, Chapter 2).

(2) Wipe sliding contacts, cams, and contact points with Disposable Applicator or Pipe Cleaner (Volume IV or V, Chapter 3), as applicable, to remove residue.

Damping Fluid 23
VV-D-1078

(3) Reclean area with MIL-PRF-29608 Cleaning-Lubricating Compound, or lubricate with fluid VV-D-1078 (Volume IV or V, Chapter 2).

d. Microminiature printed circuit boards are cleaned in accordance with NAVAIR 01-IA-23 (Navy) or TO 12-1-31 (Air Force).

e. Treat multi-pin electrical connectors in accordance with paragraphs 6-3.11. through 6-3.11.4.

f. Treat PCB edge connectors in accordance with paragraph 6-3.8.

g. External surfaces of sliding attenuators, variable attenuators, and tunable cavities shall be cleaned as follows:

CAUTION

Sliding/variable attenuators and tunable cavities are natural water/solvent traps. Never leave these components exposed during internal equipment cleaning. Sliding/variable attenuators and tunable cavities shall always be hand cleaned externally. Only hand clean internally where drying of the water/solvents can be accomplished.

(1) Remove corrosion and tarnish by rubbing affected area with Eraser (Volume IV or V, Chapter 2), or Eraser, Wood Encased, (Volume IV or V, Chapter 2). Care should be taken not to remove any thin plating on surfaces.

Alcohol, Isopropyl 6
TT-I-735

(2) Apply Isopropyl Alcohol, TT-I-735 (Volume IV or V, Chapter 2), with Acid Brush, A-A-289, style optional (Volume IV or V, Chapter 3). Rinse affected area with Isopropyl Alcohol, TT-I-735 (Volume IV or V, Chapter 2), and wipe with Cleaning Cloth, CCC-C-46 Class 7 (Volume IV or V, Chapter 2).

(3) Allow components to air dry.

Cleaning-Lubricating Compound 21
MIL-PRF-29608

(4) Mask any nearby areas where the presence of the silicone lubricant is not desired. Lubricate sliding components with an application of Spray Cleaning-Lubricating Compound, MIL-PRF-29608 Type I (Volume IV or V, Chapter 2) or Fluid VV-D-1078 (Volume IV or V, Chapter 2). The deposited silicone is very difficult to remove and prevents proper adhesion of any material applied to the sprayed area. Refer to paragraph 4-5.3.10. for method of removal.

Compound, Corrosion Preventive 3
Water-Displacing
MIL-C-81309

(5) Spray a thin coating of Water Displacing Corrosion Preventive Compound, MIL-C-81309 Type II (Volume IV or V, Chapter 2), on external metal surfaces. Avoid placing preservation material on sliding components.

h. Clean internal surfaces of sliding/variable attenuators and tunable cavities as follows:

Alcohol, Isopropyl 6
TT-I-735

(1) Apply Isopropyl Alcohol, TT-I-735 (Volume IV or V, Chapter 2), with Acid Brush, A-A-289 style optional (Volume IV or V, Chapter 3).

(2) Rinse affected area with Isopropyl Alcohol, TT-I-735 (Volume IV or V, Chapter 2) and wipe with Cleaning Cloth, CCC-C-46 Class 7, (Volume IV or V, Chapter 2) or Disposable Applicator, GG-A-616 (Volume IV or V, Chapter 3).

(3) Allow components to air dry.

(4) Do not apply preservative material.

6-3.2.12. Paint Systems. It is important that the metallic housings of avionic test equipment be protected from the environment. A properly applied paint system provides effective, long term protection. However, a paint coating is subject to abrasion, chipping, scratching, and other forms of damage in service. When damage to the paint on test equipment occurs, positive action shall be taken to provide continuous protection to the base metal. The following specific actions are appropriate.

NOTE

All paint color numbers specified in this manual are in accordance with the color coding contained in FED-STD-595.

a. If painting is impractical due to environmental conditions, treat damaged paint film as follows:

Alcohol, Isopropyl 6
TT-I-735

(1) Clean the bare area with a Cleaning Cloth, CCC-C-46 Class 7 (Volume IV or V, Chapter 2), dampened with Isopropyl Alcohol, TT-I-735 (Volume IV or V, Chapter 2).

(2) Allow to air dry.

Compound, Corrosion Preventive 26
MIL-DTL-85054

(3) As an interim measure, preserve with a thin film of Corrosion Preventive Compound, MIL-DTL-85054, Clear (Amlguard) (Volume IV or V, Chapter 2).

b. Where conditions permit, process test equipment utilizing the cleaning, corrosion repair, and conversion coating, priming, and painting procedures described in Chapter 5 and Volume II for avionic equipment with the following exceptions:

(1) The color requirements specified in do not apply to test equipment. The color of a replacement topcoat shall be selected to match the original.

(2) While use of Coating, Epoxy-Polyamide, MIL-PRF-22750 (Volume IV or V, Chapter 2), as a topcoat is a requirement on portable test equipment, Coating, MIL-PRF-81352 (Volume IV or V, Chapter 2) in the appropriate color, may be used on stationary indoor test equipment. These topcoat materials are authorized and approved for Navy use. Air Force personnel should refer to equipment specific manuals for proper color and paint systems. Apply in accordance with Volume II (Navy and Army) or TO 1-1-8 (Air Force).

6-3.2.13. Packaging, Handling and Storage. The packaging, handling and storage procedures contained in Chapter 9 shall apply to test equipment, where applicable. Organizational/Unit and Intermediate Maintenance Activities shall comply with the following additional requirements:

a. Regular external wipe-down cleaning shall be accomplished on all test equipment in the custody of the user activity. Use a clean, dry, soft cloth, Cotton Flannel, CCC-C-458 Type II (Volume IV or V, Chapter 2). This serves two purposes:

(1) Prevents accumulation of soils and potentially corrosive materials on equipment.

(2) Clean test equipment has a positive effect on the mental attitude of the individual using it. Such equipment generally receives better treatment.

b. Appropriate caps shall be installed on all equipment cavities and connectors at the Intermediate Maintenance Activities. If the test equipment is shipped to any Organizational/Unit Maintenance Activity with caps installed, it shall be returned to the Intermediate Maintenance Activity with the same type of caps installed.

c. All decals shall be maintained. This is especially important during cleaning.

d. Test equipment being stored/shipped shall be preserved and placed in the appropriate carrying case or packaged in accordance with Chapter 9. This includes equipment listed as "excess equipment".

6-3.3. WAVEGUIDES. Waveguides are only effective if the internal surfaces are completely clean, undented and not pitted by corrosion. The method of protecting the internal finish on a waveguide is to prevent moisture entry. It is essential that the waveguide seal's integrity

be maintained, because there is, currently, no known method of preserving the internal surfaces of a waveguide without adversely affecting the electrical characteristics, except by plating the surfaces with another metal, such as gold or silver, in production. This process is very expensive and seldom applied to waveguide sections used in aircraft. The integrity of a waveguide system is degraded every time a waveguide seal is broken for maintenance. Waveguides that must be opened for maintenance shall be sealed at the ends (flanges) with the appropriate protective cap or with Pressure Sensitive Tape, SAE AMS-T-22085 Type II (Volume IV or V, Chapter 2). It is important that all residues from the pressure sensitive tape are removed from all mating flange surfaces prior to reassembly of the waveguide. Remove corrosion, clean, and preserve external surfaces of waveguides as follows:

a. Ensure ends of waveguides are sealed as described above.

b. Remove external corrosion with Abrasive Mat, A-A-58054 Type I (Volume IV or V, Chapter 2). Scrub affected areas until all corrosion and contaminants are loosened.

Alcohol, Isopropyl 6
TT-I-735

c. Using a Cleaning Cloth, CCC-C-46 Class 7 (Volume IV or V, Chapter 2), dampened with Isopropyl Alcohol, TT-I-735 (Volume IV or V, Chapter 2), wipe the affected areas clean.

d. Remove seals that had been applied to ends of waveguides.

e. With a clean Cleaning Cloth, CCC-C-46 Class 7, dampened with Isopropyl Alcohol, TT-I-735 (Volume IV or V, Chapter 2), clean the mating flange surfaces, being especially careful to ensure all tape residue is removed.

f. Allow to air dry.

g. Reconnect all waveguides and plumbing.

Compound, Corrosion Preventive 3
Water Displacing
MIL-C-81309

h. Preserve all exposed areas and hardware with a spray coating of Water Displacing Corrosion Preventive Compound, MIL-C-81309 Type II (Volume IV or V, Chapter 2). Connecting surfaces shall be coated with Water Displacing, Corrosion Preventive Compound, MIL-C-81309 Type III (Volume IV or V, Chapter 2).

6-3.4. WAVEGUIDE FEED HORNS. Waveguide feed horns, attached to some antenna dishes, are subject to corrosion attack at the open end of the waveguide. To protect this open-end area from corrosion, perform the following:

Alcohol, Isopropyl 6
TT-I-735

a. Clean with a Cleaning Cloth, CCC-C-46 Class 7 (Volume IV or V, Chapter 2), dampened with Isopropyl Alcohol, TT-I-735 (Volume IV or V, Chapter 2).

b. Allow to air dry.

Compound, Corrosion Preventive 3
Water-Displacing
MIL-C-81309

c. Spray the outer throat area of waveguide opening with an ultra-thin coat of Water Displacing, Corrosion Preventive Compound, MIL-C-81309 Type III (Volume IV or V, Chapter 2). Direct the spray across the throat so that it hits the opposite side and does not enter the waveguide past the flared throat area.

6-3.5. LIGHTING SYSTEMS AND ASSEMBLIES. External formation lights, wing tip lights, rotating beacons, and lower fuselage anti-collision lights are highly susceptible to corrosion. This can be due to poor seals, exposure to the elements in flight, or water intrusion. In most cases corrosion is heaviest at the base of the bulb because of dissimilar metal contact between the bulb and socket. Treat corrosion as follows:

WARNING

Ensure that electrical power is disconnected from the light assembly prior to corrosion removal and preservation procedures.

a. Remove the light cover assembly and bulb from the socket.

b. Remove corrosion with Abrasive Mat, A-A-58054 Type I (Volume IV or V, Chapter 2), or Cleaning and Polishing Pad, Non-Abrasive (Volume IV or V, Chapter 2). Scrub affected area to loosen corrosion and contaminants.

Alcohol, Isopropyl 6
TT-I-735

c. Clean affected area with one part Isopropyl Alcohol, TT-I-735 (Volume IV or V, Chapter 2) mixed with one part fresh water. Use Acid Brush, A-A-289 style optional (Volume IV or V, Chapter 3), with the bristle trimmed back, to assist in cleaning the base of the light socket.

d. After cleaning, re-apply Isopropyl Alcohol, TT-I-735 (Volume IV or V, Chapter 2) solution, to affected area to flush out remaining residue.

e. Wipe with Cleaning Cloth, CCC-C-46 Class 7 (Volume IV or V, Chapter 2).

f. Allow to air dry.

NOTE

The following procedures are applicable only to bulbs that are installed into their socket with a turning, twisting, or scraping motion (e.g. screw base, bayonet base, or fuse-type clip). This scraping metal-to-metal contact is needed to ensure local displacement of the thin, soft-film formed by the Water Displacing Corrosion Preventive Compound, MIL-C-81309 Type III.

g. Preserve light assemblies as follows:

Compound, Corrosion Preventive 3
Water-Displacing
MIL-C-81309

(1) Apply a thin film of Water Displacing Corrosion Preventive Compound, MIL-C-81309 Type III (Volume IV or V, Chapter 2) to metal base of bulb and bulb socket.

(2) Wipe metal base of bulb with Cleaning Cloth, CCC-C-46 Class 7 (Volume IV or V, Chapter 2), to remove excess material.

(3) Install bulb in bulb socket.

Compound, Corrosion Preventive 3
Water-Displacing
MIL-C-81309

(4) Preserve the outside area of the socket, light assembly bare metal, and hardware by applying a thin film of Water Displacing Corrosion Preventive Compound, MIL-C-81309 Type II (Volume IV or V, Chapter 2).

(5) Allow to dry.

(6) Reassemble light assembly lens cover. Touch up bare metal where light assembly mates to airframe in accordance with paragraphs 5-3.

h. Small equipment mounted bulbs should be treated in accordance with paragraphs 6-3.5.a. through g.

i. On lower fuselage light assemblies, where water intrusion is a problem during aircraft washdown, cleaning and application of preservatives shall take place after each aircraft wash down.

6-3.6. RELAY AND CIRCUIT BREAKERS. Remove corrosion and preserve as follows:

NOTE

Corrosion (tarnish) removal is required on most types of contacts. Tarnish acts as an insulator on contacts. The sliding-type contact has a self-cleaning action, and tarnish removal is not required if a bright surface area is visible. Relay and circuit breaker contact areas are usually plated with a highly conductive metal. Care should be taken not to remove this plating surface. If the plating is removed, exposure of the base metal will cause corrosion and the relay/circuit breaker should be replaced.

a. Heavy corrosion and tarnish shall be removed by rubbing contact surfaces with Typewriter Eraser. Large contact areas may be cleaned using Eraser, Ruby Red (Volume IV or V, Chapter 2).

b. Medium to light corrosion and tarnish shall be removed by rubbing contact surfaces with Eraser, Wood Encased (Volume IV or V, Chapter 2). Large contact areas may be cleaned using Eraser, Ruby Red (Volume IV or V, Chapter 2).

Alcohol, Isopropyl 6
TT-I-735

c. Rinse contacts with Isopropyl Alcohol, TT-I-735 (Volume IV or V, Chapter 2), and Applicator, Cotton Tipped (Volume IV or V, Chapter 3). Clean relay or circuit breaker assembly with Acid Brush, A-A-289, style optional (Volume IV or V, Chapter 3). Pipe Cleaners (Volume IV or V, Chapter 3), may be used in hard-to-reach areas to assist in swabbing residue.

d. Wipe relay or circuit breaker assembly with Cleaning Cloth, CCC-C-46 Class 7 (Volume IV or V, Chapter 2), and allow to air dry.

e. Relays and contacts shall be preserved as follows:

Compound, Corrosion Preventive 3
Water-Displacing
MIL-C-81309

(1) Apply a thin film of Water Displacing Corrosion Preventive Compound, Ultra-Thin Film, Avionics Grade, MIL-C-81309 Type III (Volume IV or V, Chapter 2), to all areas of the relay or circuit breaker, avoiding contact and mating areas.

NOTE

After application of preservative to relays and circuit breakers, it is necessary to ensure removal of the preservative material from the contact points and mating surfaces.

Solvent, Degreasing 7
MIL-PRF-680

(2) Wipe the contact points and mating surfaces with Cleaning Cloth, CCC-C-46 Class 7 (Volume IV or V, Chapter 2), Applicator, Cotton Tipped (Volume IV or V, Chapter 3), or Pipe Cleaner (Volume IV or V, Chapter 3), as applicable, dampened with Degreasing Solvent, MIL-PRF-680 Type III (Volume IV or V, Chapter 2) to remove Water Displacing Corrosion Preventive Compound. Wipe with Isopropyl Alcohol, TT-I-735 (Volume IV or V, Chapter 2). This is necessary or contacts will not function electrically.

6-3.7. <u>SWITCHES</u>. Switches shall include all cam-operated toggle, rotary, interlock, and pushbutton types. Remove corrosion and treat as follows:

Alcohol, Isopropyl 6
TT-I-735

Solvent, Degreasing 7
MIL-PRF-680

a. Apply Isopopyl Alcohol, TT-I-735 (Volume IV or V, Chapter 2) or Degreasing Solvent, MIL-PRF-680 Type III (Volume IV or V, Chapter 2), with Acid Brush, A-A-289 style optional (Volume IV or V, Chapter 3), or Toothbrush (Volume IV or V, Chapter 3). Scrub the switch to remove corrosion and contaminants.

b. Wipe with Cleaning Cloth, CCC-C-46 Class 7 (Volume IV or V, Chapter 2). Allow to air dry.

CAUTION

Cleaning compounds and solvents identified in Volume IV and V may react with some encapsulants or plastics used to form wire harness tubing, wire coatings, conformal coatings, gaskets, and seals. Test on a small area for softening or other adverse reactions prior to general application. Refer to Table 2-4 for further restriction on these materials.

c. Switches shall be preserved as follows:

Compound, Corrosion Preventive 3
Water-Displacing
MIL-C-81309

(1) Apply a thin film of Water Displacing Corrosion Preventive Compound, Ultra-Thin Film, Avionics Grade, MIL-C-81309 Type III (Volume IV or V, Chapter 2), to switch assembly. Cockpit and control box mounted switches shall not be preserved on the exposed actuating arm or toggle. This area should be left clear of preservative so as not to hinder flight crew operation.

Alcohol, Isopropyl 6
TT-I-735

Solvent, Degreasing 7
MIL-PRF-680

NOTE

After application of preservative to open switch assemblies, it is necessary to remove the preservative from the sliding contacts, cams, and contact points.

(2) Wipe the sliding contacts, cams, and contact points of open switches with Cleaning Cloth, CCC-C-46 Class 7 (Volume IV or V, Chapter 2), Applicator, Cotton Tipped (Volume IV or V, Chapter 3), or Pipe Cleaner (Volume IV or V, Chapter 3), as applicable, dampened with Degreasing Solvent, MIL-PRF-680 Type III (Volume IV or V, Chapter 2) to remove Water Displacing Corrosion Preventive Compound. Wipe with Isopropyl Alcohol, TT-I-735 (Volume IV or V, Chapter 2). This is necessary or contacts will not function electrically.

6-3.8. EDGE CONNECTORS AND MATING PLUGS. Edge connectors on printed circuit boards (PCBs) pose a particular corrosion problem because of the thinly plated surfaces. Most plugs and connectors used in microminiature circuit boards are plated with thin layers of gold. This gold is porous and moisture will penetrate to the base metal causing corrosion. In addition, the very function of cleaning may create scratches in the plated surfaces which will accelerate the problem. Remove corrosion and preserve as follows:

a. Remove corrosion and tarnish by rubbing affected area with Eraser, Magic Rub Plastic (Volume IV or V, Chapter 2). Care should be taken not to remove thinly plated surfaces.

Alcohol, Isopropyl 6
TT-I-735

Solvent, Degreasing 7
MIL-PRF-680

b. Apply Degreasing Solvent, MIL-PRF-680 Type III (Volume IV or V, Chapter 2) with Acid Brush, A-A-289 (Volume IV or V, Chapter 3). Rinse affected area with Isopropyl Alcohol, TT-I-753 (Volume IV or V, Chapter 2), and wipe with Cleaning Cloth, CCC-C-46 Class 7 (Volume IV or V, Chapter 2).

c. Allow components to air dry.

d. Edge connectors shall be preserved as follows:

Compound, Corrosion Preventive 3
Water-Displacing
MIL-C-81309

(1) Spray a thin film of Water Displacing Corrosion Preventive Compound, Ultra-Thin Film, Avionics Grade, MIL-C-81309 Type III (Volume IV or

V, Chapter 2), to both male and female sections of connectors.

(2) Wipe excess preservative with Cleaning Cloth, CCC-C-46 Class 7 (Volume IV or V, Chapter 2).

6-3.9. WET-SLUG TANTALUM CAPACITORS. Wet-slug tantalum capacitors can be internally damaged by the application of a reverse voltage. Such damage will often result in leakage of an acid which may cause corrosion in areas adjacent to the damaged capacitor. Capacitors having evidence of leakage must be replaced and all adjacent areas cleaned to prevent further corrosion. The following procedures shall apply for the inspection of wet-slug tantalum capacitors for damage:

a. During normal equipment maintenance at the Intermediate Maintenance Activity, the seam between the slug and case of each tantalum capacitor should be examined for a small deposit of silver (the color may be black or gray). If such color is present, place one drop of the following solution on the capacitor to ensure contact with the deposit and the seam between the slug and capacitor case.

(1) Dissolve ¼ teaspoon of Indicator, Thymol Blue Reagent, A-A-59282 (Volume IV or V, Chapter 2), in three cups (24 ounces) of deionized or distilled water.

Ammonium Hydroxide 22
A-A-59370

(2) Add eight drops of Ammonium Hydroxide, A-A-59370 (Volume IV or V, Chapter 2), to assist in dissolving Indicator, Thymol Blue Reagent, A-A-59282.

NOTE

Unused Indicator, Thymol Blue Reagent, A-A-59282, that displays a reddish-purple color is contaminated and shall not be used. Verify color by placing a small amount of Thymol Blue Reagent Indicator on white paper.

b. If acid leakage has occurred, the solution will change from an amber or blue color to a reddish-purple color.

Alcohol, Isopropyl 6
TT-I-735

c. If no color change is observed, remove the indicator residue with Isopropyl Alcohol, TT-I-735 (Volume IV or V, Chapter 2) and Acid Brush, A-A-289, style optional (Volume IV or V, Chapter 3), or Cleaning Cloth, CCC-C-46 Class 7 (Volume IV or V, Chapter 2).

d. If color change is observed, remove damaged capacitor. Neutralize the contaminated area as follows:

(1) Dissolve one cup (8 ounces) of Sodium Bicarbonate, A-A-374 (Volume IV or V, Chapter 2), in one gallon of fresh water. Apply solution liberally to contaminated area.

(2) Thoroughly rinse the affected area with distilled or deionized water. Do not allow rinse water to contaminate other areas. Cleaning Cloth, CCC-C-46 Class 7 (Volume IV or V, Chapter 2), may be used to trap rinse water runoff.

Alcohol, Isopropyl 6
TT-I-735

e. Clean affected area by scrubbing with Non-Abrasive Pad (Volume IV or V, Chapter 2). Rinse with Isopropyl Alcohol, TT-I-735 (Volume IV or V, Chapter 2). Wipe clean with Cleaning Cloth, CCC-C-46 Class 7 (Volume IV or V, Chapter 2).

f. Retest area in accordance with paragraph 6-3.9.a.

g. If test is negative, air dry, oven dry, or dry with hot air gun in accordance with paragraph 2-6.

Compound, Corrosion Preventive 3
Water-Displacing
MIL-C-81309

h. Preserve by applying a thin film of Water Displacing Corrosive Preventive Compound, Ultra-Thin Film, Avionics Grade, MIL-C-81309 Type III (Volume IV or V, Chapter 2).

i. The replacement of conformal coatings shall be in accordance with NAVAIR 01-1A-23 (Navy) or TO 00-25-234 (Air Force).

6-3.10. ALUMINUM ELECTROLYTIC CAPACITORS. Aluminum Electrolytic Capacitors, MIL-C-62, that utilize synthetic rubber seals (some rubber/plastic combination seals) are susceptible to damage during cleaning. Inspect Aluminum Electrolytic Capacitor, MIL-C-62, for end seal deterioration. If seals look bulged or uneven, the capacitor must be replaced and all adjacent areas cleaned to prevent further corrosion.

a. Clean area in accordance with paragraph 6-3.9.e.

b. Dry area in accordance with paragraph 6-3.9.g.

c. Preserve area in accordance with paragraph 6-3.9.h.

d. The replacement of conformal coating shall be in accordance with NAVAIR 01-1A-23 (Navy) or TO 00-25-234 (Air Force).

6-3.11. MULTIPIN ELECTRICAL CONNECTORS, CLEANING AND PRESERVATION. Multipin electrical connectors require special attention, especially in areas exposed to salt water, such as speed brake, wing fold, and landing gear. The following techniques will assist in limiting corrosion attack:

WARNING

Ensure that all electrical power is disconnected from the aircraft and all systems in the aircraft are deactivated. Disconnect all batteries.

CAUTION

Cleaning compounds and solvents identified in Volume IV or V may react with some encapsulants or plastics used to form wire harness tubing, wire coatings, conformal coatings, gaskets, or seals. Test on a small area for softening or other adverse reactions prior to general application. Refer to Table 2-4 for further restrictions on these materials.

NOTE

Continuity test does not preclude a visual inspection of connectors because corrosion can still occur externally.

a. Protect open connectors with plastic/metal caps or pressure sensitive tape in accordance with paragraph 9-3.5.

b. If connector boots are installed and water intrusion cannot be prevented due to design, a small drain hole (¼ inch minimum, ⅜ inch maximum) may be cut in the low point of the connector boot to allow water to escape.

c. Special attention should be given to connectors using replaceable pins. These connectors use a self-sealing gasket that automatically seals the connector against water intrusion. "Dog bones" (plastic inserts) are used to fill unused contactor cavities. The repeated removal and replacement of the pins or omission of the "dog bones" may cause the watertight seal to lose its effectiveness. The use of potting compounds may be required to prevent water intrusion in extreme cases when the connector cannot be replaced (refer to paragraph 5-4.2.).

d. Connectors mounted on avionic equipment that are susceptible to the same environment as aircraft wire harness connectors shall be treated with the same corrosion removal/preservation techniques. Mounting plates normally contain a gasket that acts as a watertight seal. These gaskets should be inspected each time a connector is dismantled for cleaning or repair.

6-3.11.1. External Corrosion Removal and Cleaning.

a. Disassemble the connector back shell, if possible, and inspect for corrosion damage. If the damage is too severe, the connector may require replacement.

b. Remove corrosion on unplated surfaces with Abrasive Mat, A-A-58054 Type I Grade A (Volume IV or V, Chapter 2), as appropriate. Ensure connector mating surfaces, threads, shell and mounting plate (if used) are cleaned.

c. Corrosion on cadmium plated connectors appears as white to light grey powdery deposits. A smooth dark grey surface indicates tarnish but does not affect the function of the connector or clamp. Removal of a dark grey finish is not required; proceed to step e. below. White/light grey deposits, heavy pitting, or red rust indicates the presence of corrosion and shall be removed by the least aggressive method described below.

Compound, Corrosion Preventive 3
Water-Displacing
MIL-PRF-81309

(1) Remove light corrosion products by cleaning with a Toothbrush, A-A-123, or Cleaning Cloth, CCC-C-46 Class 7, dampened with MIL-PRF-81309 Type III.

(2) Remove moderate corrosion products with a small non-abrasive mat, A-A-3100, dampened with MIL-PRF-81309 Type III.

d. Wipe residue with Cleaning Cloth, CCC-C-46 Class 7 (Volume IV or V, Chapter 2).

Alcohol, Isopropyl 6
TT-I-735

e. Apply Isopropyl Alcohol, TT-I-735 (Volume IV or V, Chapter 2), one part alcohol to one part fresh water, with Brush Typewriter, A-A-3077 Style T (Volume IV or V, Chapter 3) or Toothbrush (Volume IV or V, Chapter 3). Scrub connector mating areas, threads, shell and mounting plates.

f. Remove excess solvent and residue with Cleaning Cloth, CCC-C-46 Class 7 (Volume IV or V, Chapter 2).

6-3.11.2. Internal Corrosion Removal and Cleaning.

Alcohol, Isopropyl 6
TT-I-735

NOTE

On most connectors the receptacle (female) contacts are difficult to clean. If corrosion is found, the most practical solution is pin replacement.

a. Apply Isopropyl Alcohol, TT-I-735 (Volume IV or V, Chapter 2), with Acid Brush, A-A-289, style optional (Volume IV or V, Chapter 3).

b. Wipe excess solvent and residue with Cleaning Cloth, CCC-C-46 Class 7 (Volume IV or V, Chapter 2). Use Pipe Cleaner (Volume IV or V, Chapter 3) to remove solvent from pin area.

Sealing Compound 19
MIL-PRF-8516

c. For those connectors exposed to fluids that adversely affect Room Temperature Vulcanizing (RTV) Coating, MIL-A-46146 (e.g. dielectric coolant, turbine oil, hydraulic fluid), apply Sealing Compound, Synthetic Rubber, Accelerated, MIL-PRF-8516 (Volume IV or V, Chapter 2) to the connector backshell and wire bundle instead of MIL-A-46146. The Sealing Compound, Synthetic Rubber, Accelerated, MIL-PRF-8516, provides very stable (fluid resistant) sealing where temperatures do not exceed 200°F (121°C).

6-3.11.3. Sealing Connector Backshell. Moisture intrusion into a connector often occurs by way of the backshell. This problem is particularly acute after damage to the seal occurs during pin replacement. The backshell may be sealed as follows:

a. Verify that sealing plugs ("dog bones") are installed in unused contactor cavities.

b. Remove retainer ring and mylar tape (if present) from the back of the electrical connector. Pull backshell and retainer ring clear of electrical connector.

c. Tie back shielded wire pigtails, where applicable.

Adhesive/Sealant, Silicone RTV 1
Non-Corrosive
MIL-A-46146

d. Apply RTV, MIL-A-46146 Type 1 (Volume IV or V, Chapter 2), by inserting sealant applicator nozzle into wire bundle at the back of the connector (refer to Figure 6-7). Squeeze the tube while slowly withdrawing the nozzle from the wire bundle at the back of the connector. Repeat the application of sealant two or three times at different locations around the wire bundle. The sealant will self-level in approximately 15 minutes. Recommended thickness is $\frac{1}{16}$ inch across the entire rear grommet. If, after 15 minutes following the first application, there is not enough to entirely seal the back of the connector, additional sealant may be added, but in no case shall the depth of sealant exceed $\frac{1}{8}$ inch.

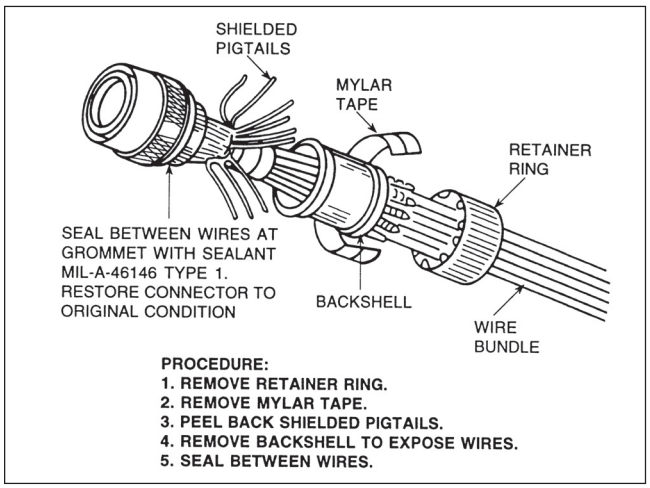

Figure 6-7. Connector Sealing Procedures

e. After sealant application, position the connector so that the connector face is parallel to the floor. This allows the sealant to flow to a uniform thickness over the back of the connector during initial cure. After 30 minutes, the connector may be placed in any position, although the cure will continue for about 24 hours.

f. Contactors may later require replacement. After making such a replacement, add a drop of the sealant around the replaced wire near the rear of the grommet. Position connector face parallel to the floor for 30 minutes for initial cure.

g. Connectors exposed to severe environments, such as wheel wells, wing butts, or bilges, may be taped using Electrical Insulating Tape, 604-1 (black) or 604-2 (red), (Volume IV or V, Chapter 2). RTV, MIL-A-46146 (Volume IV or V, Chapter 2) shall be brushed over the tape.

6-3.11.4. Water-Displacement and Treatment. After corrosion removal/cleaning or any time connectors, plugs, or receptacles are separated for maintenance, treat as follows:

Alcohol, Isopropyl 6
TT-I-735

a. Liberally apply Isopropyl Alcohol, TT-I-735 (Volume IV or V, Chapter 2), to internal/external sections of male and female connectors using an Acid Brush (Volume IV or V, Chapter 3). Mate and unmate connector several times to clean. Rinse with Isopropyl Alcohol, TT-I-735, and allow to dry.

Compound, Corrosion Preventive 3
Water-Displacing
MIL-C-81309

NOTE

The application of Water Displacing Corrosion Preventive Compound, Ultra-Thin Film, Avionics Grade, MIL-C-81309 Type III, will assist in displacing any moisture present from the metallic surfaces in connector internal sections.

b. Apply a light film of Water Displacing Corrosion Preventive Compound, Ultra-Thin Film, Avionics Grade, MIL-C-81309 Type III (Volume IV or V, Chapter 2), to the internal sections of the connectors, plugs, and receptacles. Avoid excessive application or overspray of preservative.

c. Tilt connector down, if possible, to drain excess. Wipe off excess preservative with Cleaning Cloth, CCC-C-46 Class 7 (Volume IV or V, Chapter 2).

d. Prior to connecting threaded sections of connector, plug, or receptacle backshells, treat threaded area with Water Displacing Corrosion Preventive Compound, Ultra-Thin Film Avionics Grade, MIL-C-81309 Type III (Volume IV or V, Chapter 2).

e. Mate connector sections. Wipe off excess preservative with Cleaning Cloth, CCC-C-46 Class 7 (Volume IV or V, Chapter 2).

CAUTION

For connectors requiring frequent mating and unmating, use Water Displacing Corrosion Preventive Compound, MIL-C-81309 Type III.

f. For antenna connectors/cables, apply corrosion protective materials according to paragraph 6-3.1.3.e.

6-3.12. COAXIAL CONNECTORS. Coaxial connectors require special steps in order to avoid water intrusion. In most cases, contaminants in fuel/oil quantity connectors, and similar capacitive-type indicating system connectors, will cause erroneous quantity

indications in cockpit systems. Antenna coaxial connectors have similar moisture problems. Coaxial connectors shall be cleaned and treated in accordance with paragraphs 6-3.11.1., 6-3.11.2., and 6-3.11.4.

6-3.13. WIRE HARNESSES AND CABLES. When corrosion is found at the pin to wire connection on electrical connectors, plugs, and receptacles, the wire harness/cable should be inspected for corrosion/ cracking of the wire insulation. Coaxial cable shielding is particularly susceptible to corrosion. Wire harnesses and cables shall be cleaned and treated as follows:

a. If corrosion is apparent at the back of a connector, it may be necessary to remove an inch or two of the wire harness cable cover to inspect for corrosion.

Alcohol, Isopropyl 6
TT-I-735

b. Apply Isopropyl Alcohol, TT-I-735 (Volume IV or V, Chapter 2), with Brush Typewriter, A-A-3077 Style T (Volume IV or V, Chapter 3), or Toothbrush (Volume IV or V, Chapter 3). Scrub affected area until contaminants are loosened. Re-apply Isopropyl Alcohol, TT-I-735, to flush area.

c. Shake excess solvent from wire harness and wipe with Cleaning Cloth, CCC-C-46 Class 7 (Volume IV or V, Chapter 2).

d. Allow to air dry.

e. Treat in accordance with paragraphs 6-3.11.1., 6-3.11.2., and 6-3.11.4.

f. Where applicable, repair wire harness and cable covering.

6-3.14. PRINTED CIRCUIT BOARDS. Edge connectors (and mating plugs) used in miniature and microminiature printed circuit boards (PCBs) are cleaned and preserved in accordance with paragraph 6-3.8.

6-3.15. FILTERS. The cleaning of filters is essential to maintaining the cleanliness and, thus, reliable operation of avionic/test equipment. The frequency of cleaning shall be as appropriate based on local conditions. Filters shall be cleaned as follows:

a. Primary Cleaning Method.

(1) Clean in accordance with cleaning Track CSR3 or CSR2B, as applicable. Refer to Table 2-3.

(2) If grease is present, clean and degrease in accordance with cleaning track DB2A. Refer to Table 2-3.

b. Secondary Cleaning Method.

(1) Place the filter in a deep sink and flush thoroughly with fresh water.

(2) Scrub rigid or metal filters with Cleaning Brush, A-A-2074 (Volume IV or V, Chapter 3).

Compound, Aircraft Cleaning 4
MIL-PRF-85570

(3) If oil or grease is present in filter, clean the filter with a solution of nine parts fresh water to one part Cleaning Compound, MIL-PRF-85570 Type II (Volume IV or V, Chapter 2). Scrub rigid or metal filters with Cleaning Brush, A-A-2074 (Volume IV or V, Chapter 3). Rinse thoroughly with fresh water.

CAUTION

Compressed air used for drying can create airborne particles that may enter the eyes. Pressure shall not exceed 10 psi. Eye protection is required.

(4) Blow off excess water with dry air or dry nitrogen at not more than 10 psi pressure.

(5) Allow to air dry.

(6) Do not preserve filters.

6-3.16. SENSITIVE INTERNAL METAL SURFACES. Metal surfaces such as resonant cavities, tube covers, and other delicate metal components, shall be inspected for signs of corrosion. Remove corrosion and preserve as follows:

a. Remove dirt and contaminants with Cleaning and Polishing Pad, Non-Abrasive (Volume IV or V, Chapter 2). Scrub affected area until all contaminants are dislodged.

b. Remove corrosion and tarnish with Typewriter Eraser, (Volume IV or V, Chapter 2), or Eraser, Ruby Red, (Volume IV or V, Chapter 2). Care should be taken not to remove thin plating from the surfaces.

Alcohol, Isopropyl 6
TT-I-735

c. Clean residue with Isopropyl Alcohol, TT-I-735 (Volume IV or V, Chapter 2). Apply with Acid Brush, A-A-289 style optional (Volume IV or V, Chapter 3), or Brush Typewriter, A-A-3077 Style T (Volume IV or V, Chapter 3).

d. Remove residue with Cleaning Cloth, CCC-C-46 Class 7 (Volume IV or V, Chapter 2).

e. Rinse affected area with Isopropyl Alcohol, TT-I-735 (Volume IV or V, Chapter 2), and wipe dry with Cleaning Cloth, CCC-C-46 Class 7, (Volume IV or V, Chapter 2). This step will assist in removing water.

CAUTION

Exercise care when using Hot Air Gun near plastic materials. Excessive heat may decompose the plastic and/or change its electrical characteristics.

f. Air dry or dry with Hot Air Gun, A-A-59435 (Volume IV or V, Chapter 3), or Hot Air Gun, Raychem, HT-900 (Volume IV or V, Chapter 3), or equivalent.

g. Preservation, where circuit function will not be affected, shall be as follows:

Compound, Corrosion Preventive 3
Water-Displacing
MIL-C-81309

(1) Apply a thin film of Water Displacing Corrosion Preventive Compound, Ultra-Thin Film, Avionics Grade, MIL-C-81309 Type III (Volume IV or V, Chapter 2), on all metal surfaces.

(2) Remove excess preservative with Cleaning Cloth, CCC-C-46 Class 7 (Volume IV or V, Chapter 2).

6-3.17. STATIC WICK DISCHARGERS. Corrosion, deterioration, and/or damage of the static wick dischargers can result in poor performance of the aircraft's radios and communications systems, erratic operation of instruments, and potential electrical shock to personnel. When found to be damaged or corroded, the static wick dischargers should be replaced as follows:

NOTE

(Navy) Av-DEC gasket installation requires authorization from the cognizant type/model/series engineering authority for the aircraft.

These procedures are applicable to all static dischargers except in accordance with aircraft specific technical manuals. The mounting bases of static dischargers can vary in shape and size. The following installation procedures are typical and should be used on all static dischargers allowing the use of a gasket.

a. Remove and discard old static discharger wick and mounting base plate. Utilization of the radial bristle disc generates dust particles that may contain chromates from primers. Eye and respiratory protection is required when operating this tool.

b. Clean and remove paint and corrosion from the aircraft surface and static wick discharger mounting base in accordance with Volume II (Navy and Army) or TO 1-1-691 (Air Force), with radial bristle disc being preferred removal method.

Compound, Aircraft Cleaning 4
MIL-PRF-85570

c. Thoroughly clean treated area with Cleaning Cloth, CCC-C-46 Class 7 (Volume IV or V, Chapter 2) moistened with Cleaning Compound, MIL-PRF-85570 Type II (Volume IV or V, Chapter 2) (Air Force can use MIL-PRF-87937 Type II or IV (Volume V, Chapter 2)), using a dilution of nine (9) parts water to one (1) part cleaner. Rinse thoroughly until a water break-free surface is obtained. Allow to air dry. If water break-free surface is not obtained,

Coating, Chemical Conversion 10
MIL-DTL-81706

d. Where corrosion products were abrasively removed, the affected surfaces shall be treated with Chemical Conversion Coating, MIL-DTL-81706 Class 3 with the Alodine Touch 'n Prep Pen (Volume IV or V, Chapter 2) as preferred treatment method. If the Touch 'n Prep Pen is used, only one coat should be applied and the treated surface does not require rinsing or wiping off and can be air or forced air dried. Allow coated surfaces to dry before proceeding.

e. Remove conductive gasket from the protective packaging. Exercise caution not to fold or bend the material. Remove release film from the side of the gasket marked "antenna side" and position over the static discharger mounting base. Beginning at one side or the comer of the mounting base, place gasket into position, carefully aligning gasket holes with the mounting base fastener holes. Release film should remain on exposed aircraft side of gasket until just prior to installation of the static discharger mounting base to the aircraft surface.

f. Remove release film from the "aircraft side" of the gasket. Align fasteners at correct locations on the aircraft surface. Tighten each fastener one or two turns to hold the static discharger mount in place on the aircraft. Secure static discharger mount to aircraft by torquing each fastener in accordance with the specific aircraft technical manual.

g. Install new static discharger wick.

h. Check electrical resistance between static discharger mounting base and aircraft structure in accordance with paragraph 6-3.17.3.

i. For maximum corrosion protection, apply an outer edge seal, thixoflex gray sealant (Volume IV or V, Chapter 2), with 50 cc Injectable Sealant Application Dispenser (Volume IV or V, Chapter 3), or SAE-AMS-3277 Fast Cure Sealant (Volume IV or V, Chapter 2), using Spatula, A-A-277 (Volume IV or V, Chapter 3) or Sealant Gun (Volume IV or V, Chapter 3) with Nozzle (Volume IV or V, Chapter 3) and Retainer Sleeve (Volume IV or V, Chapter 3) if using 2½ oz. cartridge. Mix sealant in accordance with manufacturer's instructions and form a fillet of sealing compound around outside edge of static discharger mounting base to form a water tight seal.

Compound, Corrosion Preventive 8
MIL-PRF-16173

j. Cover fastener heads with Corrosion Preventive Compound, MIL-PRF-16173 Grade 4 (Volume IV or V, Chapter 2).

k. Allow sealant to cure for one-half hour, then remove any excess sealant from aircraft skin using a nonmetallic scraper shown in Figure 6-1.

6-3.17.2. Alternate Method For Static Discharger Installation Method. This method is to be used only when conductive gaskets (paragraph 6-3.17.1) are not authorized or available.

WARNING

Utilization of the radial bristle disc generates dust particles that may contain chromates from primers. Eye and respiratory protection is required when operating this tool.

a. Clean and remove paint and corrosion from the aircraft surface and static wick discharger mounting base in accordance with Volume II (Navy and Army) or TO 1-1-691 with radial bristle disc being preferred removal method.

Compound, Aircraft Cleaning 4
MIL-PRF-85570

b. Thoroughly clean treated area with Cleaning Cloth, CCC-C-46 Class 7 (Volume IV or V, Chapter 2) moistened with Cleaning Compound, MIL-PRF-85570 Type II (Volume IV or V, Chapter 2) (Air Force can use MIL-PRF-87937 Type II or IV (Volume V, Chapter 2)), using a dilution of nine (9) parts water to one (1) part cleaner. Rinse thoroughly until a water break-free surface is obtained. Allow to air dry. If water break-free surface is not obtained, reclean area with dilution of four (4) parts water to one (1) part cleaner. Rinse thoroughly to obtain water break-free surface and allow to air dry.

Coating, Chemical Conversion 10
MIL-DTL-81706

c. Where corrosion products were abrasively removed, the affected surfaces shall be treated with Chemical Conversion Coating, MIL-DTL-81706 Class 3 with the Alodine Touch 'n Prep Pen (Volume IV or V, Chapter 2) as preferred treatment method. If the Touch 'n Prep Pen is used, only one coat should be applied and the treated surface does not require rinsing or wiping off and can be air or forced air dried. Allow coated surfaces to dry before proceeding.

d. Install static discharger mount base and new static discharger wick in accordance with the aircraft specific technical manual.

e. Check electrical resistance between static discharger mounting base and aircraft structure in accordance with paragraph 6-3.17.3.

Alcohol, Isopropyl 6
TT-I-735

f. Clean the outside edge of the static wick attachment area and fastener heads with a Cleaning Cloth, CCC-C-46 Class 7 (Volume IV or V, Chapter 2), moistened with Isopropyl Alcohol, TT-I-735 (Volume IV or V, Chapter 2) and allow to air dry.

Sealing Compound 2
Corrosion Inhibitive
MIL-PRF-81733

g. Using Spatula, A-A-277 (Volume IV or V, Chapter 3) or Sealant Gun (Volume IV or V, Chapter 3) with Nozzle (Volume IV or V, Chapter 3) and Retainer Sleeve (Volume IV or V, Chapter 3) if using 2½ oz. sealant cartridge, form a fillet of Sealing Compound, MIL-PRF-81733 (Volume IV or V, Chapter 2) around the outside edge of the static wick discharger base to form a water tight seal.

Compound, Corrosion Preventive 8
MIL-PRF-16173

h. Cover fastener heads with Corrosion Preventive Compound, MIL-PRF-16173 Grade 4 (Volume IV or V, Chapter 2).

i. Allow sealant to cure for 30 minutes, then remove excess sealant from aircraft skin using a nonmetallic scraper shown in Figure 6-1.

6-3.17.3. Static Discharger Bonding/Grounding Connection Electrical Resistance Test. The electrical resistance test is performed after the static discharger is assembled. The test shall take place prior to applying outer edge sealant, if applicable.

CAUTION

It is essential that the probe be placed against bare metal when taking the reading. The rotating probe tips will create bare metal contact when pressed into the surface.

6-3.17.3.1. Using a milliohm meter such as the R1-LE milliohm meter, conduct an electrical resistance bonding test in accordance with the aircraft specific technical manual to measure resistance between the static discharger mount and the aircraft structure.

6-3.17.3.2. The resistance between the static wick base and the aircraft structure shall comply with the requirements of the aircraft specific manual.

6-4. ELECTRICAL BONDING/GROUNDING CONNECTIONS.

6-4.1. GENERAL. Electrical bonding provides a low resistance electrical path between two or more conductive units or components. Grounding is a form of bonding that utilizes the primary structure as a portion (return path) of the electrical circuit. Bonding may serve one or all of several functions:

a. Provide a common ground for the proper electrical functioning of the units involved.

b. Provide a path to minimize lightning strike damage.

c. Prevent the buildup of static potentials that could result in a spark discharge.

d. Minimize static and stray currents in units involved.

e. Prevent a unit from emitting electromagnetic energy that would interfere with other units and provide a signature for enemy detection/recognition.

f. Shield equipment from outside electromagnetic interference (EMI) sources.

6-4.2. BIMETALLIC JUNCTIONS. The connecting of two or more diverse electrical objects often results in a bimetallic junction that is susceptible to galvanic corrosion. This type of corrosion can rapidly destroy a bonding connection if suitable precautions are not observed. Aluminum alloy jumpers (bonding straps) are used in most bonding situations. However, copper jumpers sometimes are used to bond together parts made of stainless steel, cadmium-plated steel, aluminum, brass, or other metals. Where contact between dissimilar metals cannot be avoided, the choice of bonding material and associated hardware material is important. Materials should be chosen such that the part most prone to corrode (anode) is the easiest and least expensive to replace. At bimetallic junctions, where finishes are removed to provide good electrical connection, a protective finish/sealant shall be reapplied to the completed connection to prevent corrosion. This chapter describes and illustrates the procedures for the assembly and preservation of bonding or grounding connections. This includes special emphasis on techniques to minimize galvanic corrosion. Refer to Volume I for discussion on galvanic corrosion.

NOTE

For additional information on bonding and grounding straps and selection of hardware, refer to NAVAIR 01-1A-505, NAVAIR 01-1A-1 (Navy); TO 1-1A-14, TO 1-1A-8 (Air Force); or TM 55-1500-323-24 (Army) as well as other applicable service directives.

6-4.3. HARDWARE SELECTION. When repairing/replacing existing bonding or grounding connections, use the same kind of attaching hardware as the original. This hardware has been selected on the basis of mechanical strength, electrical requirements, corrosion resistance, and ease of installation. When the original connection displays evidence of galvanic corrosion, use a washer of anodic material installed between the dissimilar metals. This will cause any corrosion to occur in the washer, the easiest and least expensive part to replace. To accomplish this, Figures 6-8 through 6-13 show the proper assembly configurations. The corresponding material selections are shown in Tables 6-1 through 6-3. Selection of hardware material(s) and order of assembly depend on the particular metal(s) specified for the structure/jumper terminal. For example, using the configuration shown in Figure 6-8, a bolt is secured as a stud through a flat structural surface. The structure is aluminum alloy and bond/ground jumper terminal is also aluminum. This terminal maybe attached over a cadmiumplated steel bolt (stud) and clamped together by a cadmiumplated steel nut. Uncoated aluminum washers are used in the position as shown.

6-5. BONDING/GROUNDING SURFACE PREPARATION.

6-5.1. GENERAL. Procedures for preparation of a metallic surface before mating electrical conductor(s) are as follows:

Solvent, Degreasing 7
MIL-PRF-680

a. Remove all dirt, oil, and grease from a circular area slightly larger than the connection. This area should correspond to about 1 ¼ times the diameter of the connection. Use Cloth, Non-Woven Wiping Cloths, A-A-162 Type I Class 1 or 2 (Volume IV or V, Chapter 2) dampened with Degreasing Solvent, MIL-PRF-680 Type III (Volume IV or V, Chapter 2).

b. If more vigorous soil removal is required, scrub with Brush Typewriter, A-A-3077 (Volume IV or V, Chapter 3), until all contaminants are removed.

c. Wipe with a dry cloth, Non-Woven Wiping Cloth, A-A-162 Type I Class 1 or 2 (Volume IV or V, Chapter 2).

d. Remove paint, anodic, or conversion coating film and surface corrosion from the planned attachment area with Abrasive Mat, A-A-58054 Type I (Volume IV or V, Chapter 2). For corrosion beyond the surface corrosion stage, refer to Volume II of this manual (Navy and Army) or TO 1-1-691 (Air Force).

Table 6-1. Hardware for Stud Bonding or Grounding to Flat Surface

Structure	Screw or Bolt & Lock Nut	Plain Nut	Washer ** A	Washer ** B	Washer ** C & D	Lockwasher E	Lockwasher F
Aluminum Terminal and Jumper							
Aluminum Alloys	Cadmium Plated Steel	Cadmium Plated Steel	Aluminum Alloy	Aluminum Alloy	Cadmium Plated Steel or Aluminum	Cadmium Plated Steel	Cadmium Plated Steel
Magnesium Alloys	Cadmium Plated Steel	Cadmium Plated Steel	Magnesium * Alloy	Magnesium * Alloy	Cadmium Plated Steel or Aluminum	Cadmium Plated Steel	Cadmium Plated Steel
Steel, Cadmium Plated	Cadmium Plated Steel	Cadmium Plated Steel	None	None	Cadmium Plated Steel or Aluminum	Cadmium Plated Steel	Cadmium Plated Steel
Steel, Corrosion Resistant	Corrosion Resistant Steel	Cadmium Plated Steel	None	None	Cadmium Plated Steel or Aluminum	Corrosion Resistant Steel	Cadmium Plated Steel
Tinned Copper Terminal and Jumper							
Aluminum Alloys	Cadmium Plated Steel	Cadmium Plated Steel	Aluminum Alloy	Aluminum Alloy	Cadmium Plated Steel	Cadmium Plated Steel	Cadmium Plated Steel or Aluminum
Magnesium Alloys	Caution: Do not connect copper to magnesium.						
Steel, Cadmium Plated	Cadmium Plated Steel	Cadmium Plated Steel	None	None	Cadmium Plated Steel	Cadmium Plated Steel	Cadmium Plated Steel
Steel, Corrosion Resistant	Corrosion Resistant Steel	Cadmium Plated Steel	None	None	Cadmium Plated Steel	Corrosion Resistant Steel	Cadmium Plated Steel

* When not available, use aluminum alloy
** Uncoated aluminum washers shall be used throughout.

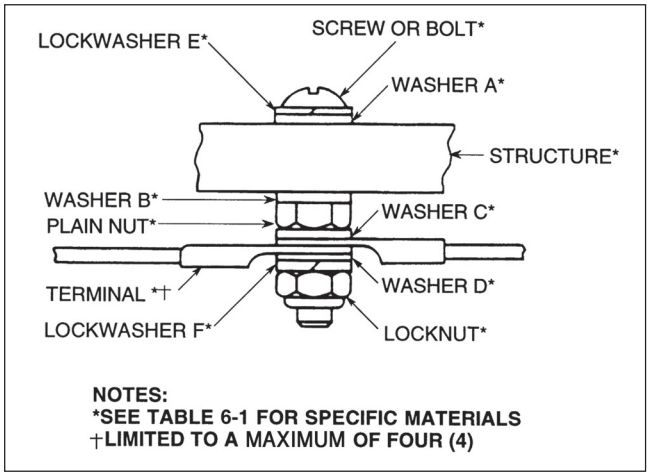

Figure 6-8. Stud Bonding or Grounding to Flat Surface

Table 6-2. Hardware for Nut Plate Bonding or Grounding to Flat Surface

Structure	Screw or Bolt & Nut Plate	Rivet	Lockwasher	Washer A	Washer B
Aluminum Terminal and Jumper					
Aluminum Alloys	Cadmium Plated Steel	Aluminum Alloy	Cadmium Plated Steel	Cadmium Plated Steel or Aluminum	Aluminum
Magnesium Alloys	Cadmium Plated Steel	Aluminum Alloy	Cadmium Plated Steel	Cadmium Plated Steel or Aluminum	Alloy
Steel, Cadmium Plated	Cadmium Plated Steel	Corrosion Resistant Steel	Cadmium Plated Steel	Cadmium Plated Steel or Aluminum	Aluminum
Steel, Corrosion Resistant	Corrosion Resistant Steel	Corrosion Resistant Steel	Cadmium Plated Steel	Cadmium Plated Steel or Aluminum	Cadmium Plated Steel
Tinned Copper Terminal and Jumper					
Aluminum Alloys	Cadmium Plated Steel	Aluminum Alloy	Cadmium Plated Steel	Cadmium Plated Steel	Aluminum Alloy
Magnesium Alloys	Caution: Do not connect copper to magnesium.				
Steel, Cadmium Plated	Cadmium Plated Steel	Corrosion Resistant Steel	Cadmium Plated Steel	Cadmium Plated Steel	Cadmium Plated Steel
Steel, Corrosion Resistant	Corrosion Resistant Steel	Corrosion Resistant Steel	Cadmium Plated Steel	Cadmium Plated Steel	Cadmium Plated Steel or Corrosion Resistant Steel

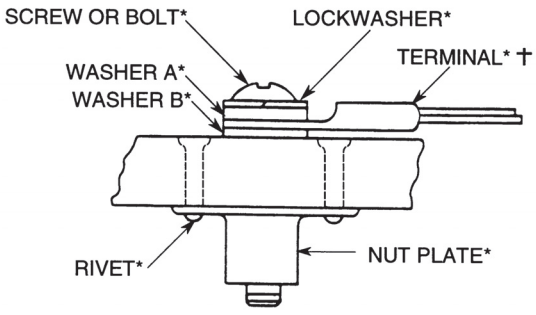

NOTES:
***SEE TABLE 6-2 FOR SPECIFIC MATERIALS**
†LIMITED TO A MAXIMUM **OF FOUR (4)**

Figure 6-9. Nut Plate Bonding or Grounding to Flat Surface

Table 6-3. Hardware for Bolt and Nut Bonding or Grounding to Flat Surface

Structure	Screw or Bolt & Nut	Lockwasher	Washer A	Washer B	Washer C
Aluminum Terminal and Jumper					
Aluminum Alloys	Cadmium Plated Steel	Cadmium Plated Steel	Cadmium Plated Steel or Aluminum	None	Cadmium Plated Steel or Aluminum
Magnesium Alloys	Cadmium Plated Steel	Cadmium Plated Steel	Magnesium Alloy	Magnesium * Alloy	Cadmium Plated Steel or Aluminum
Steel, Cadmium Plated	Cadmium Plated Steel	Cadmium Plated Steel	Cadmium Plated Steel	Cadmium Plated Steel	Cadmium Plated Steel *
Steel, Corrosion Resistant	Corrosion Resistant Steel	Corrosion Resistant Steel	Cadmium Plated Steel	Cadmium Plated Steel	Cadmium Plated Steel
Tinned Copper Terminal and Jumper					
Aluminum Alloys	Cadmium Plated Steel	Cadmium Plated Steel	Cadmium Plated Steel	Aluminum Alloy	Cadmium Plated Steel
Magnesium Alloys	Caution: Do not connect copper to magnesium.				
Steel, Cadmium Plated	Cadmium Plated Steel	Cadmium Plated Steel	Cadmium Plated Steel	Cadmium Plated Steel	Cadmium Plated Steel
Steel, Corrosion Resistant	Cadmium Plated Steel or Corrosion Resistant Steel	Cadmium Plated Steel	Corrosion Resistant Steel	Corrosion Resistant Steel	Cadmium Plated Steel or Corrosion Resistant Steel
* When not available, use aluminum alloy					

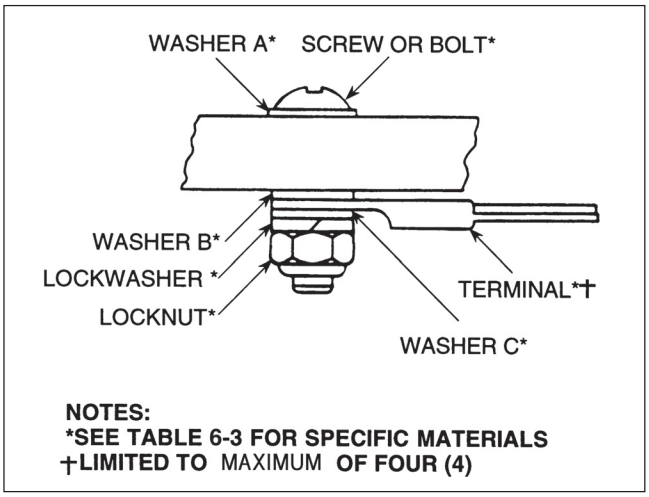

Figure 6-10. Bolt and Nut Bonding or Grounding to Flat Surface

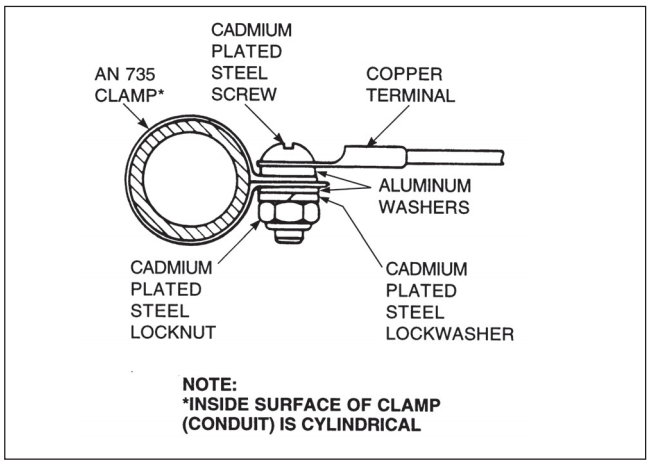

Figure 6-11. Copper Jumper Connector to Tubular Structure

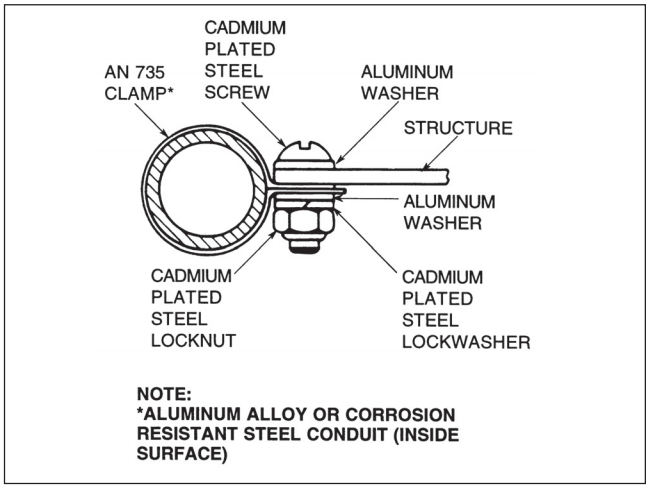

Figure 6-12. Bonding Conduit to Structure

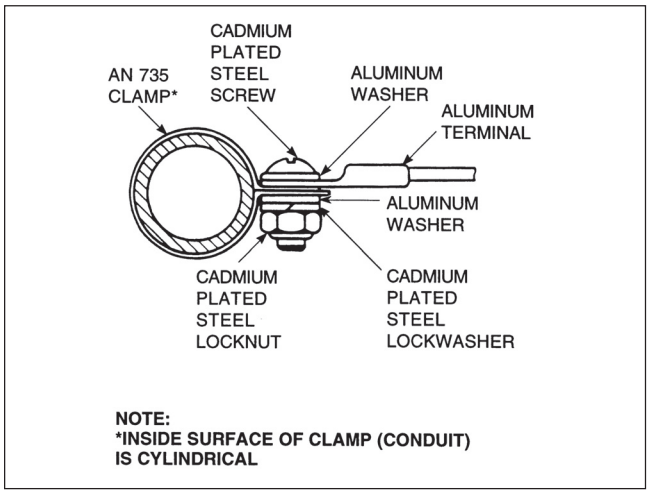

Figure 6-13. Aluminum Jumper Connector to Tubular Structure

Alcohol, Isopropyl 6
TT-I-735

e. Wipe clean with a cloth, Non-Woven Wiping Cloth, A-A-162 Type I Class 1 or 2 (Volume IV or V, Chapter 2), dampened with Isopropyl Alcohol, TT-I-735 (Volume IV or V, Chapter 2).

f. Allow to air dry.

g. If structure is magnesium or aluminum, treat the bare metal surface with Chemical Conversion Material in accordance with Chapter 5.

h. Clean bonding cable with a cloth, Non-Woven Wiping Cloth, A-A-162 Type I Class 1 or 2 (Volume IV or V, Chapter 2), dampened with Isopropyl Alcohol, TT-I-735 (Volume IV or V, Chapter 2).

i. If necessary, use a Brush, A-A-3077 (Volume IV or V, Chapter 3), to scrub the strap until all corrosion products and contaminants are dislodged.

j. Wipe clean with the solvent-dampened cloth and allow to air dry.

k. Assemble connection(s) and torque in accordance with the requirements of the applicable service directives.

l. Test electrical resistance in accordance with paragraph 6-3.1.12.

Compound, Corrosion Preventive 3
Water-Displacing
MIL-C-81309

6-5.2. PRESERVATION. Apply Water Displacing Corrosion Preventive Compound, MIL-C-81309 Type III (Volume IV or V, Chapter 2) according to Table 9-1. The following procedures apply for bonding/grounding connections that are not environmentally protected continually.

Compound, Corrosion Preventive 3
Water-Displacing
MIL-C-81309

Compound, Corrosion Preventive 8
MIL-PRF-16173

a. For bonding/grounding connections that require fairly frequent disassembly, preserve the connection area by applying Corrosion Preventive Compound, MIL-C-81309 Type II (Volume IV or V, Chapter 2), followed by a coating of Corrosion Preventive Compound, MIL-PRF-16173 Grade 4 (Volume IV or V, Chapter 2).

Sealing Compound 2
Corrosion Inhibitive
MIL-PRF-81733

Sealing Compound 19
MIL-PRF-8516

b. For connections that seldom require disassembly, preserve with the more permanent and abrasion-resistant Sealing Compound, MIL-PRF-8516 (Volume IV or V, Chapter 2), applied with a Spatula, A-A-277 (Volume IV or V, Chapter 3).

6-5.3. ELECTRONIC EQUIPMENT SHOCK MOUNT BONDING PRESERVATION. This type of electrical bonding uses a bonding wire (jumper assembly) or strips of aluminum/copper. The following corrosion prevention method applies:

Alcohol, Isopropyl 6
TT-I-735

a. Clean disassembled bonding connection by wiping with a cloth, Non-Woven Wiping Cloth, A-A-162 Type I Class 1 or 2 (Volume IV or V, Chapter 2), dampened with Isopropyl Alcohol, TT-I-735 (Volume IV or V, Chapter 2).

b. Allow to air dry.

c. Assemblebondingconnection.

Compound, Corrosion Preventive 3
Water-Displacing
MIL-C-81309

d. Apply Water Displacing, Corrosion Preventive Compound, MIL-C-81309 Type II (Volume IV or V, Chapter 2), over jumper assembly.

Sealing Compound 2
Corrosion Inhibitive
MIL-PRF-81733

e. For connections seldom requiring disassembly, coat the entire connection with Corrosion Inhibiting Sealant, MIL-PRF-81733 Class 1, Grade A Type II - 1/2 (Volume IV or V, Chapter 2) using a sealant gun; and smooth out with a Spatula, ZZ-S-70 (A-A-227) (Volume IV or V, Chapter 3) to ensure complete coverage. This sealant will cure to a tack free state in 10 hours.

CHAPTER 7
ELECTROMAGNETIC INTERFERENCE (EMI) SHIELDING

7-1. OVERVIEW. Electromagnetic energy that is generated/absorbed aboard military aircraft can interfere with avionic systems and cause malfunctions. This radiation, known as electromagnetic interference (EMI), is produced by radar antennas, electric motors, and inadequately shielded avionics units. Lightning and other natural sources can also affect normal performance of aircraft electrical/electronic systems. Some examples of EMI-related system malfunctions are microprocessor bit errors, computer memory loss, false indicators (i.e., alarms, lights, readouts), and power loss. The results of such malfunctions can cause a flight safety situation, aborted mission, or unacceptable system/subsystem operation. In order to minimize EMI-induced failures, avionic housings must absorb and reflect incident electromagnetic energy. Usually the shielding system consists of a conductive gasket sandwiched between an aluminum housing and an aluminum lid. This gasket provides sufficient electrical conductivity across the enclosure/gasket/lid junction per military grounding/EMI shielding requirements. It also prevents fluid intrusion into the components.

7-2. FACTORS INFLUENCING EMI. EMI involves the interaction of electromagnetic energy (electric or magnetic fields) with the circuitry of an electronic device. Currents or voltages caused by EMI can couple with digital signal lines and produce erroneous data. Analog devices can also malfunction as a result of EMI. Corrosion is a major cause of EMI shielding deterioration. Corrosion protection typically relies on oxides, organic coatings, and nonconductive films. Corrosion produces nonconductive films allowing EMI intrusion and degrades the load bearing capabilities of a structure. Conversely, EMI protection requires a conductive path. A typical low electrical resistance joint of silver and aluminum is a dissimilar metal couple that is highly susceptible to galvanic corrosion.

7-3. SOURCES OF AVIONIC EMI.

7-3.1. GENERAL. EMI can affect avionics by introducing garbled/false signals, disrupting memory, and destroying circuits. This is because modern circuits operate at low power levels which can be disrupted with low level noise. Sources of avionic EMI include the following:

a. Devices that are part of a peripheral to a system/sub system within the aircraft (intrasystem EMI).

b. Radiated emissions from ground-based or other external emitters (intersystem EMI).

c. Electrostatic discharges on the airframe or inside the aircraft.

d. Lightning strikes to the aircraft.

e. Electromagnetic Pulse (EMP) generated from a high-altitude nuclear detonation.

7-3.2. EMI THREAT CATEGORIES. Military aircraft often operate in severe electromagnetic environments while carrying out intended missions. This presents a potential threat to digital flight controls and mission essential avionics due to single/multiple EMI sources. The following are examples of the kinds of problems that can result from EMI-induced malfunctions. Aircraft can jettison bombs while taking off from an aircraft carrier due to the response of bomb release circuits to carrier transmitters. Helicopter rotor blades and aircraft wings can inadvertently fold when illuminated by radar. EMI can cause aircraft computers to “dump” programs necessary for the operation of mission essential equipment. Table 7-1 compares several typical electromagnetic threats.

7-3.3. INTRASYSTEM/INTERSYSTEM EMI. Aircraft avionic subsystems operate over a frequency range from a few kilohertz to tens of gigahertz. Ensuring that these pieces of equipment operate compatibly is a primary concern. Intrasystern EMI principally involves receivers responding to undesired signals and transmissions causing undesired responses in receivers and other equipment. Other examples of EMI are interphone noise due to magnetic coupling and equipment malfunction via relay/solenoid generated transients. Intersystem EMI is caused by transmission from external sources such as ground-based emitters (radar, TV, radio) through various couplings.

7-3.4. STATIC ELECTRIFICATION. The three ways that static electrification of an aircraft can occur are frictional charging, engine charging, and induction charging. If the charge accumulation is sufficient, a

Table 7-1. Military Aircraft Electromagnetic Threat Comparison

	Intra/Intersystem Electromagnetic Interference (EMI)	Static Electrification	Lightning	Electromagnetic Pulse (EMP)
Threat Exposure	Local Usually antenna-related	Local Usually particle-related	Local Usually cloud-related	Regional Nuclear burst related
Nature of Environment	Man-made Continuous or transient signals Controlled/uncontrolled Known, partially known	Corona/spark discharge Streamers Uncontrolled Unknown	Natural Arc discharge Uncontrolled Partially known	Man-made Plane wave transient Uncontrolled Partially known
Effects	Induced Direct	Induced	Direct Induced	Induced
Criticality	Flight safety mission	Mission	Flight safety mission	Flight safety mission
Threat Spectrum	Broadband/narrowband (up to 100 GHz)	Broadband (up to 100 MHz)	Broadband (up to 100 MHz)	Broadband (up to 100 MHz)
Analysis	Ant/ant coupling Wire/ant coupling Ant/wire coupling Wire/wire coupling	Field/ant coupling Field/wire coupling	Field/ant coupling Field/wire coupling Component failure Probability of survival	Field/ant coupling Field/wire coupling Component failure Probability of survival
Testing	Equip-level radiated/ conducted emission/ susceptibility Safety-of-flight Ground/in-flight	High voltage DC Charged particle bombardment	High-current pulse Attachment-point Pin injection Cable induction	Free-field Pin injection Cable induction
Protection Measures	Shielding Filtering Bonding Grounding Limiters Circuit design Software design Frequency management Cable/equipment placement Fiber optics	Discharges EMI control techniques	Diverters Surge arresters EMI control techniques	EMI control techniques
Protection Assurance	Operational exposure Noise source investigation Coupling reduction Measures	Operational exposure Noise source detection Corrective bonding Discharge management	Operational exposure Mishap investigation Repair/replacement	No peacetime exposure Recurring surveillance Repair/replacement
MIL-STD Reference	MIL-STD-461 MIL-STD-464	MIL-STD-464	MIL-STD-464	None

number of interference generating processes can occur. First, if the total aircraft structure is charged, electric fields at its extremities can become sufficient to cause arcing. Second, if insulated dielectric surfaces are charged, such as a windshield or radome, spark-like discharges across the dielectric surface to the surrounding metal structure can result. Third, if isolated (unbonded) metal sections of the aircraft become charged, arcing to adjacent metal structures can occur. Finally, slowly varying induction pulses can be produced in antennas moving through clouds of charged particles. These processes create an uncontrolled electromagnetic environment that generally impacts receiver inputs via antennas. This degrades the operational performance of navigation and communication equipment. Broadband digital systems can also be affected because discharges occur as pulses that may be misinterpreted as control signals. Chapter 8 provides more in depth theory on electrostatic discharge (ESD) as it relates to military avionic equipment, modules, and components.

7-3.5. LIGHTNING. Lightning is probably the most severe uncontrolled electromagnetic environment to which aircraft are exposed. The severity of the lightning threat depends on the probability of a lightning strike to the aircraft. Lightning strike is a function of weather, temperature, geographical region, aircraft altitude, aircraft type, and other parameters. Statistics show that an aircraft experiences less than one strike every 3000 hours of flight operation. The damage from a lightning strike to the aircraft depends on its characteristics, such as peak current, rate-of-rise, risetime, charge, action integral, and number of subsequent strikes. The direct effects of a lightning strike are burning, eroding, blasting and structural deformation caused by arcing. Also, high pressure shock waves and magnetic forces are produced by the associated high currents. These effects pose great dangers to flight safety in addition to aborted missions. The indirect (induced) effects result mostly from the interaction of electromagnetic fields with electrical/electronic circuits. These effects also can be hazardous since lightning may generate high voltages and currents in circuits through coupling mechanisms.

7-3.6. ELECTROMAGNETIC PULSE. EMP is a threat to military electronics which arises primarily from high altitude nuclear detonations. Gamma rays produced in the explosion interact with air molecules and particulates with sufficient energy to eject electrons. These electrons interact with the earth's magnetic field, radiating high intensity fields. Field strengths can be on the order of 50,000 volts per meter with pulse durations of hundreds of nanoseconds. The large skin currents generated on the surface of an enclosure require that joint impedances are low. This prevents large voltage drops at these discontinuities in the shield. The characteristics of EMP appear to be very similar to that of the lightning transient. The differences are in pulse risetime, rate-of-rise, and pulse duration.

7-4. EMI SHIELDING.

7-4.1. EMI SHIELDING PRACTICES. Some form of EMI shielding is required for avionics aboard all modem military aircraft. Shielding is used to protect avionics from the electromagnetic environment present in field service. Shielding is accomplished by enclosing electronic equipment in a conductive shell or enclosure (Faraday cage). The enclosure reduces the incident electromagnetic energy to tolerable levels by reflection and absorption. Radiation incident on the interior and exterior surfaces does not escape or penetrate the enclosure. Openings in the shield required for power/signal cables, covers and access doors, ventilation, and windows allow EMI leakage. Shielding for these openings usually takes the form of gaskets, seals, or joints that provide electrical continuity across voids to ensure a continuous protective shell. In addition, this shielding also aids lightning strike protection by providing a conductive path. Performance of an EMI shielding system is a function of the weakest component. Shielding effectiveness of the various components (wall material, access doors, vents, cabling, connectors, joint seals) should be maintained. Changes in the shielding effectiveness of individual components over time should be correctable through routine maintenance. Conditions that can inhibit the life and shielding effectiveness of EMI gaskets are:

a. The environment in which a gasket is stored.

b. The environment in which the gasketed joint is to be used.

c. The force on the gasketed joint.

d. The unevenness of the joint.

7-4.2. EMI SHIELDING EFFECTIVENESS. When electromagnetic energy impinges on a conductive barrier, a portion of the energy is reflected/transmitted.

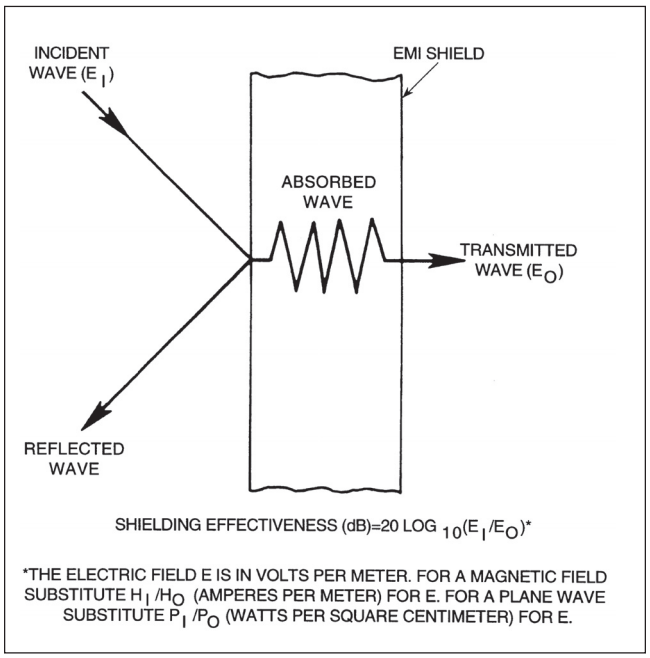

Figure 7-1. Basic EMI Shield

Absorption of the energy by the material attenuates the transmitted wave. When the wave reaches the opposite side of the wall, reflection and transmission again occur at this discontinuity. Figure 7-1 illustrates this process for an electric field. Shielding effectiveness (SE) is defined as SE = 20 log (E_i/E_o). SE is shielding effectiveness in decibels (dB), E_i is the incident field strength, and E_o is the transmitted field strength. This ratio of electric/magnetic field strength at a point before and after the placement of a shield for a given external source is a measure of the shielding element's ability to control EMI. For example, to shield avionics of older aircraft tested at 20 V/m from an external field of 1000 V/m, 34 dB attenuation is required. Absorption losses depend on the shield's bulk electrical properties (relative permeability and conductivity), thickness of the material, and frequency of the impinging energy. Reflection losses depend on the impedance of the incident wave and the electrical properties of the material. In most applications, magnetic fields present problems only for nonferrous shields, due to the lower reflection losses/larger skin depths associated with low frequencies. MIL-STD-461 is a triservice specification for testing of electronic systems for radiated and conducted emissions and susceptibility. IEEE299 describes procedures for measuring shielding effectiveness of enclosures. A modified version of this procedure is used in MIL-G-83528 for characterizing the shielding effectiveness of conductive elastomers. MIL-STD-464 is an electrical bonding specification, which has been applied to EMI joints. Low resistance values do not guarantee high shielding effectiveness. High resistance values indicate potential problems but do not provide a measure of shielding effectiveness.

Table 7-2. Shielding Effectiveness vs. Percent Leakage

Shielding Effectiveness (dB)	Attenuation Ratio	Leakage through Shield (percent)
20	10:1	10.0
40	100:1	1.0
60	1000:1	0.1
80	10000:1	0.01
100	100000:1	0.001
120	10^6:1	0.0001

7-4.3. SHIELDING REQUIREMENTS. For practical purposes, the range of shielding extends up to around 120 dB. Table 7-2 lists the amount of signal passing through an enclosure for different levels of shielding. At 120 dB, 0.0001% of the signal penetrates the shield. (Measurement of shielding levels beyond the 110 to 120 dB range is experimentally difficult.) Shielding requirements cover both susceptibility of equipment to external signals and the emission from equipment. EMI can be radiated through the atmosphere or conducted along power and signal lines (see Figure 7-2). Reduction of conducted EMI entails filtering of the signal lines. Test specifications cover individual pieces of equipment or all of the components integrated into a system. Frequently, individual components may pass a test but fail when connected together in a system. This is due to inadequate shielded cabling, which acts like an antenna to receive or radiate EMI. Operating modes of a system may generate different levels of EMI depending on the signals transmitted between the components.

7-4.4. EMI SHIELDING ENCLOSURE MATERIALS. Conductive gasketing is used to provide electrical ground and EMI shielding across a joint and often employs an environmental seal. They are used on temporary apertures such as access panels. These panels have scams that must be electromagnetically scaled. The form of a gasket is determined by attachment methods, force available, joint unevenness, available space, and applicable EMI shielding criteria. Table 7-3 lists some of the materials used in EMI shielding enclosures. The major material requirements for EMI gaskets include:

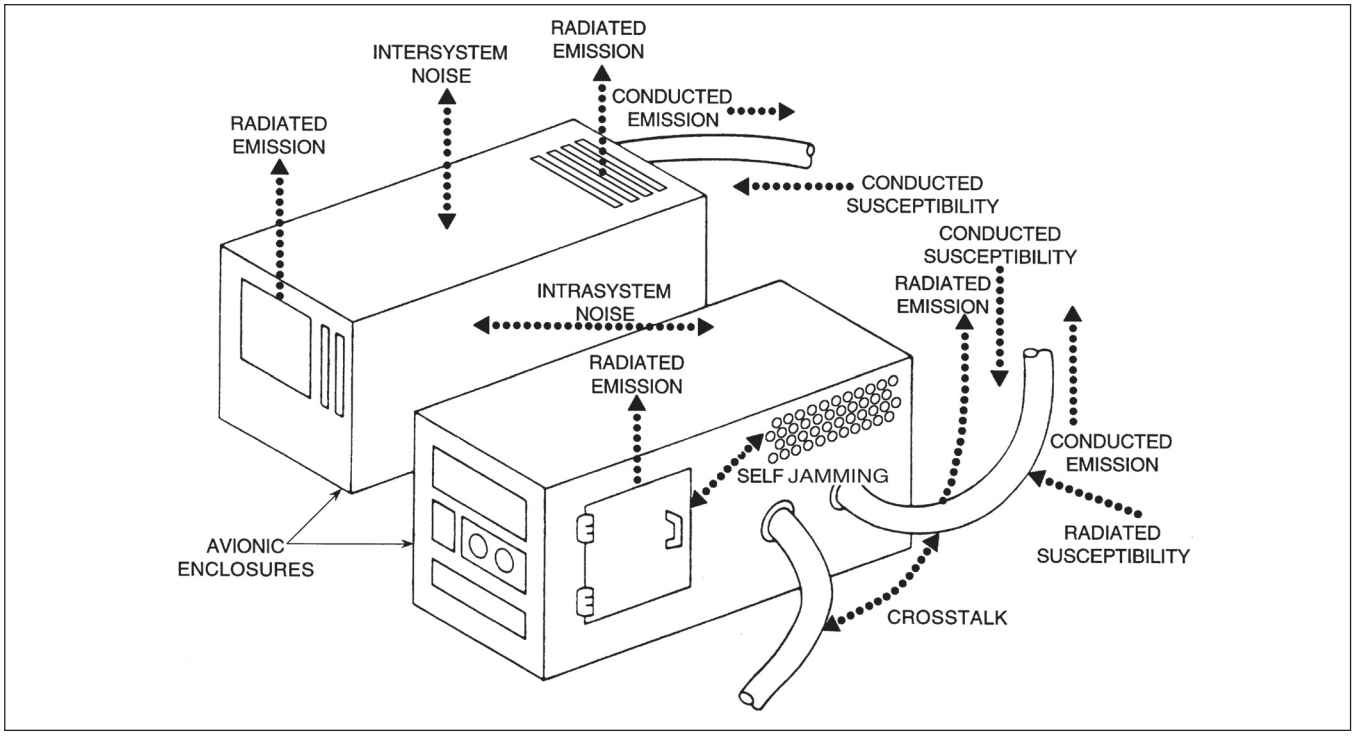

Figure 7-2. Classification of EMI Problems

a. Conductivity: Good conductivity is taken as a rough, indirect measure of EMI shielding. In addition, a contact resistance of 2.5 milliohms is specified across joints for grounding and lightning strike protection.

b. Corrosion resistance of gasket material: Properties should not change with service (e.g. corrosion which produces an insulting layer of material).

c. Compatibility with the mating surface: Electrochemical compatibility to prevent galvanic corrosion.

d. Good adhesive qualities: Required for electrical contact and environmental scaling.

e. Chemical resistance to solvents: Properties should not change with exposure to operational chemicals (e.g. fuel, paint stripper, hydraulic fluid).

f. Resilience: Resistance to compression required for electrical contact and environmental scaling. Long term pressure should not cause permanent deformation (compression set). Normal deflection for solid rectangular elastomer seals range from 5 to 15%.

g. Wear resistance: Important when the gasket is repeatedly compressed and depressed.

h. Conformability: Accommodate joint unevenness.

7-5. EFFECTS OF CORROSION.

7-5.1. GENERAL. Corrosion can degrade the electrical and mechanical properties of a joint. The exposure of EMI gaskets to various environmental conditions can significantly reduce its shielding effectiveness and service life. Under field service conditions, military

Table 7-3. Materials Used in EMI Joints

Enclosure	Coatings	Fillers Used in EMI Gaskets
Steel Aluminum Magnesium Composites Plastic	Silver Copper Nickel Tin Cadmium Aluminum (IVD) Zinc Chromate Phosphate	Carbon Silver Copper Beryllium/Copper Phosphor Bronze Monel Stainless Steel Steel Nickel Tin Aluminum

avionics experience corrosion between metal surfaces such as joints. In these environments, exclusion of electrolyte from the joint is essential to maintaining an EMI seal. Nonconductive environmental seals (gaskets, sealants, and coatings) must be used to exclude moisture from the joint. Corrosion-induced changes in bulk resistivity of the EMI gasket may contribute to degradation of the EMI seal.

7-5.2. CORROSION-INDUCED CHARACTERISTICS. Although no valid method of evaluating the effect of corrosion on EMI shielding exists presently, certain trends can be identified. The difficulty lies in the fact that conductive gaskets may not be evaluated by simply measuring EMI shielding performance before and after environmental exposure. This is because the change in EMI shielding is due to both corrosion and disassembly/ reassembly between EMI tests. EMI/EMP protection for enclosed avionic equipment can degrade in shielding performance over time. This often occurs after only 3 or 4 months of exposure to the field environment and normal use. Galvanic corrosion is usually the principal form of attack. In most military applications, the flange is made of an aluminum alloy, such as 6061-T6. Steel, magnesium, and composite materials are occasionally used in flange construction. All of the common conductive materials used in EMI gaskets are dissimilar to varying degrees with aluminum. Gasket metals include monel, beryllium copper, silver, carbon, nickel, and stainless steel. Composite fillers are substrates plated with a more conductive material. These include tin plate on various substrates (beryllium copper, phosphor bronze, copperplated steel); silver on copper, aluminum, nickel, and glass powders; and nickel on graphite or carbon particles. Conductive composites offer significant advantages over aluminum, such as improved corrosion resistance and lighter weight. EMI attenuation properties are usually imparted to these composites by filling the polymer with conductive fibers, flakes, or particles. Applying a conductive coating to the polymer surfaces is also employed. Galvanic series for homogeneous materials, such as those contained in Volume 1, Chapter 3, do not necessarily apply to composite fillers. Interaction between the plated surfaces and substrate can alter the potential and ability of the surface to support cathodic reactions. In addition, relative surface areas of the EMI gasket and aluminum will have some influence on the rate of dissolution of the aluminum. The presence of copper ions accelerates corrosion of aluminum by deposits that form local cathodes and increase the concentration of cathodic reactants. The copper ion concentration can be higher that the other cathodic reactants (dissolved oxygen) allowing higher currents. Copper goes into solution through either galvanic coupling to the conductive surface coating or general corrosion of copper. Corrosion of the aluminum flange also depends on the presence of aggressive ions in the solution. Initiation of corrosion creates more acidic conditions further accelerating the corrosion rate. In general, corrosion products are nonconductive materials that increase the electrical resistance of the bond or joint between surfaces. This will result in an impedance high enough to destroy the EMI shielding effectiveness of many avionic systems.

7-6. PREVENTION, TREATMENT, AND CONTROL OF CORROSION ON EMI SHIELDING.

7-6.1. GENERAL. Changes in the shielding effectiveness can occur over time due to environmental exposure. These changes are usually the result of the operational/ maintenance environment (salt solution, vibration, pressure and temperature cycling) and complicate routine maintenance of avionic equipment. In general, exclusion of moisture and electrolyte from the joint is essential to maintaining an EMI seal. Since EMI protection is a function of the electrical continuity of the joint, conductive environmental seals (gaskets, sealants, and coatings) must be used. Paints and sealants used in proximity of the joints to exclude moisture shall only be applied by qualified maintenance personnel and in accordance with this manual and the applicable Maintenance Instruction Manual (MIM) (Navy), Technical Orders (TO) (Air Force), and/or Technical Manual JM) (Army). In cases where conductive paths depend on the use of specific types of fasteners and other hardware, strict adherence shall be paid to the specific fastener designated in the applicable MIM (Navy), TO (Air Force), and/or TM (Army). Proper and complete grounding/ bonding, with visual inspection after maintenance, is mandatory. In those instances where electrical bonding depends on bringing conductive surfaces into contact with threaded fasteners, standard torque values shall be used unless otherwise specified.

7-6.2. CORROSION PREVENTIVE MAINTENANCE AND CONTROL. EMI gaskets should be periodically checked to ensure they are continuing to provide their intended functions. Inspection intervals should balance the need for proper operation and the environment, with the destructiveness caused by surface wear of

gaskets with disassembly/ reassembly. Gaskets may deteriorate via attack by operational chemicals, corrosion, and wear. Therefore, inspection should include the following.

a. Check for corrosion products, pitting of the aluminum surface, or bulges in the sealant due to corrosion beneath the gaskets.

b. Check the bonding of the gasket to the structure to prevent moisture intrusion.

c. Check for loss of electrical conductivity of the gasket or its electrical bond to the aircraft.

d. Check for wear and swelling of the gasket.

e. Check for compression set of the seal.

f. Insure maintenance procedures are being followed (e.g. avoid solvents which can wash away conductive particles).

g. Check for excessive bending and/or pulling of electrical cables and shields.

7-6.3. EMI SHIELDING CORROSION REPAIR AND TREATMENT. Corrective maintenance of EMI gaskets depends on the type of gasket involved, size of the damaged area, and degree/type of corrosion. EMI gaskets are usually of either metal or conductive elastomer construction. Finger stock, mesh, and spiral ribbon are examples of metal gaskets. Conductive elastomers consist of dispersions of conductive particles (spheres, irregular shapes, fibers) in elastomer matrices. Oriented wire gaskets have characteristics of both categories. Since each type of EMI gasket has its own peculiarities, each will require special corrosion treatment/repair. The following “generic” gasket repair procedure is outlined below for general guidance. Maintenance personnel should refer to the applicable MIM (Navy), TO (Air Force), and/or TM (Army) for more specific repair information.

a. When corrosion is observed, disassemble only the affected area and remove the corrosion using the mildest available method.

Compound, Corrosion Preventive 3
Water Displacing
MIL-C-81309

Alcohol, Isopropyl 6
TT-I-735

b. Carefully clean the area with Isopropyl Alcohol, TT-I-735 (Volume IV or V, Chapter 2). If replacement seals are available, install them in accordance with aircraft maintenance instructions or bulletins. If replacement seals are not available or do not exist, spray the contacting surfaces with a light coating of Water Displacing Corrosion Preventive Compound, MIL-C-81309 Type II (Volume IV or V, Chapter 2) and then reassemble.

c. Inspect repairs and areas known to be chronic problems often.

7-6.3.1. (AF) Electronically Conductive, Corrosive Inhibiting Sealant for EMI Suppression Applications. Many electrically conductive sealants are available, but most are not corrosion inhibiting and generate galvanic corrosion at bond lines when contacting aluminum and/or steel alloys in the presence of moisture. SAE Specification AMS 3262 covers an electrically conductive, corrosion inhibiting sealant that can be used in EMI suppression applications without causing a galvanic corrosion problem. This material can be used to bond EMI gaskets to one of two mating surfaces, to bond and seal two mating metal surfaces fastened in a permanent joint, or to fillet seal the edges of a metal-to-metal lap or butt type joint while in each case providing electrical conductivity between all components. See Volume V, Chapter 2 for sealant ordering information. Application procedures are as follows:

a. If present, remove all paint and primer from all metal surfaces that will contact the sealant per TO 1-1-8 procedures, and lightly abrade these surfaces with an Abrasive Mat, A-A-58054 Type I Grade B (Volume V, Chapter 2).

Alcohol, Isopropyl 6
TT-I-735

b. Clean all surfaces that will contact the sealant with a lint free cloth (Volume V, Chapter 2) moistened with Isopropyl Alcohol, TT-I-735 (Volume V, Chapter 2), and then wipe the areas dry with a clean cloth of the same type. Do not allow drying by evaporation or touch the cleaned areas with bare hands as this will recontaminate the surfaces and prevent adhesion of the sealant.

NOTE

All sealant and primer application operations and component assembly operations after the sealant application shall be performed within the temperature range of 60°F to 95°F so that the sealant will adhere properly.

WARNING

Sealants and primers are flammable and toxic. Skin and eye protection are required. Avoid all sources of ignition. Good general ventilation is normally adequate.

c. If required by the sealant manufacturer, obtain the appropriate adhesive primer (Volume V, Chapter 2). Apply it to the surfaces that will contact the sealant per the manufacturer's instructions; allow it to cure for at least ½ but not more than 4 hours before applying the sealant. If more than 4 hours elapse after the primer application, repeat steps a, b, and c before applying the sealant.

d. Choose a sealant (Volume V, Chapter 2). If it is a multi-component sealant, mix the components together per the manufacturer's instructions.

NOTE

To case clean up of excess sealant, Masking Tape, SAE-AMS-T-21595, Type I (Volume V, Chapter 2) can be applied to the surface on each side of the area to which sealant will be applied. Install the tape before the sealant is applied, and remove it as soon as possible after the sealant is smoothed out.

e. Apply a bead of sealant to the surface to which the EMI gasket will be bonded, one of the two mating metal surfaces that will be permanently assembled to the edge of a lap joint, or the gap of a butt joint (whatever situation applies), using a sealant gun or a squeezable sealant tube. Using a straight edged wood or plastic tool, smooth the sealant bead to form a continuous film over the entire contact surface for the EMI gasket or the mating metal surface of a permanent assembly as applicable, or smooth the bead at the lap joint edge to an even, continuous fillet or smooth the bead in the butt joint gap to fill the gap entirely and be flush with the surface, as applicable.

f. Press the EMI gasket into the sealant or assemble the sealant coated surface to the sealant free mating surface of a permanent assemble, as applicable, while the sealant is wet or within the manufacturer's specified application life.

Alcohol, Isopropyl 6
TT-I-735

g. Clean up any excess sealant with a lint free cloth (Volume V, Chapter 2) moistened with Isopropyl Alcohol, TT-I-735 (Volume V, Chapter 2) while the sealant is still wet.

h. Allow the sealant to cure for the time recommended by the manufacturer, but not less than 24 hours, before placing the equipment in service.

7-7. EMI PACKAGING REQUIREMENTS. Unless otherwise specified, items that are sensitive to EMI should be packaged in accordance with MIL-E-17555 for electromagnetic protection. Marking shall be accordance with MIL-STD-129.

CHAPTER 8
ELECTROSTATIC DISCHARGE (ESD)

8-1. OVERVIEW.

8-1.1. GENERAL. Very Large Scale Integration (VLSI) digital components are steadily increasing in functional power, speed, and system applications in military avionics. By making the VLSI devices small, less voltage is needed to operate circuitry and the noise immunity decreases. Many of these devices are highly susceptible to damage from the discharge of static electricity. Electrostatic discharge (ESD) affects many components such as transistors, resistors, integrated circuits (ICs), and other types of semiconductor devices. A spark discharge resulting from the accumulation of electrostatic charges may not immediately destroy a device or cause it to become nonfunctional. The device can be permanently damaged, yet perform its intended function. Additional exposure to spark discharges or continued use of the device can further damage the item until failure occurs. This is known as a latent failure and can seriously affect a system's reliability. It is essential that everyone involved in the repair handling, transporting, and storing of electrostatic discharge sensitive (ESDS) items be concerned about ESD. All ESDS items should be packaged, shipped, and stored in ESD protective materials. Further information on the Air Force ESD program is contained in TO 00-25-234.

8-1.2. DEFINITION. ESD is the transfer of electrostatic charge between bodies with different electrostatic potentials. This is caused by direct contact or induced by an electrostatic field. The most formidable ESD is lightning or electromagnetic pulse (EMP). Discharges from human bodies are the most frequent, least noticeable, and most ignored ESD. ESD affects electronic devices in a number of different ways. It can degrade performance, change the electrical characteristics, or cause complete failure of the device.

8-1.3. FAILURE MECHANISMS. Three of the most common failure mechanisms are junction burnout, oxide punchthrough, and metallization burnout. Junction burnout usually occurs in bipolar discrete and integrated circuits. Metal Oxide Semiconductor (MOS) discrete and integrated circuits often experience oxide punch through. Metallization burnout is usually associated with both bipolar and MOS ICs. The following paragraphs describe some of the mechanisms that cause avionics to fail in field service and storage. In addition, procedures are outlined to prevent these failures from occurring.

8-2. FACTORS INFLUENCING ESD. Maintenance of avionic equipment for ESD prevention requires an understanding of the factors that contribute to ESD. Most modern aircraft electrical and electronic components are susceptible to conditions and activities that can cause ESD; for example, walking on concrete floors, rubbing or separating materials, using electrostatic copiers, or wearing synthetic clothing. Separating dry materials generates greater ESD than moist materials because moisture is conductive and helps to dissipate charge. For this reason, ESD effects are more noticeable in the winter since heating systems reduce moisture on the surfaces of furniture and other objects. Any circumstances that results in a low relative humidity (RH) will permit a greater accumulation of electrostatic charges.

8-3. SOURCES OF AVIONIC ESD.

8-3.1. CHARGING EFFECTS AND IC BREAKDOWN. Static charge is generated as a result of direct or indirect electrostatic field effects. The ESD problems that result from direct charge interaction with an IC are caused by triboelectrically generated charges. That is, charges that come in contact with the exposed leads of the IC consequently cause breakdown. The indirect source of ESD is either by induction or capacitance change in the immediate environment. Inductive charge generation can be caused by a large static charge away from an IC. This occurs if the charge is oriented such that the IC receives an induced potential across its leads. A capacitance change can also occur via a large static charge existing some distance away. This causes the charge distribution near the IC to vary corresponding to the capacitance change, resulting in ESD. For example, insulators near an IC can result in direct charge contact sufficient to cause breakdown.

8-3.2. GENERATION OF STATIC CHARGES. Static electrical charges are caused by the movement of dissimilar materials against one another. Generally, these charges are attributed to some form of contact between two dissimilar surfaces. The triboelectric series is a list of materials in order of static charge generation.

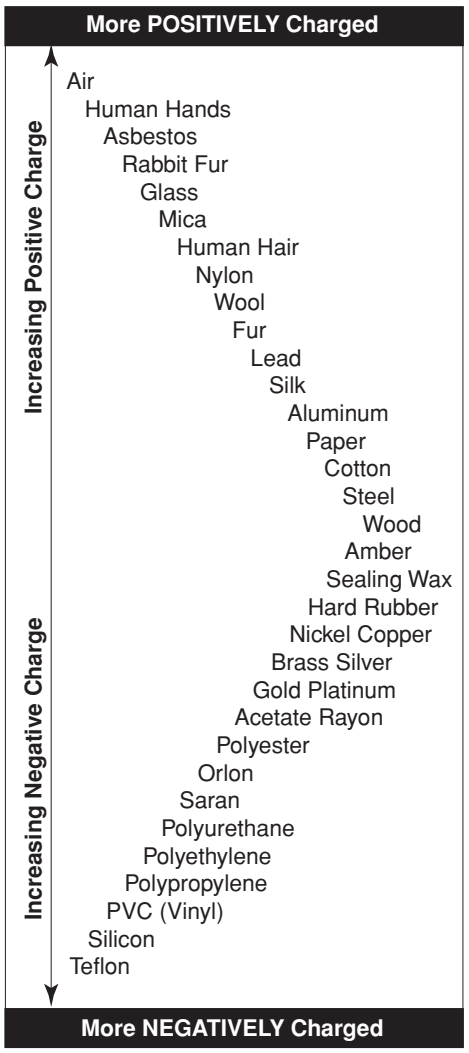

Figure 8-1. Triboelectric Series (Partial)

A partial triboelectric series is outlined in Figure 8-1. Materials that are further apart on the table generate the greatest static charge when rubbed together. This occurs with the materials nearest to the top of the table retaining the positive change. An example of this is the motion of air against synthetics generates the highest static charge. Also, rubbing polyethylene and human hair will generate a greater static charge than the charge resulting from rubbing nylon and cotton. Another possible explanation of charge accumulation between two bodies is that ion transfer between surfaces causes static charge buildup. Other possible causes of electron transfer between contacting surfaces include differences in dielectric constant, thermal effects, and piezoelectric or pressure effects.

8-3.3. HUMAN BODY GENERATED ESD. People are prime sources of ESD that damage avionic components. Electrostatic charges generated by rubbing or separating materials are readily transmitted to a person's conductive layer. This causes that person to be electrostatically charged. When an electrostatically charged person handles or comes near an ESDS part, he can damage it from direct discharge. The change in voltage of a human body with normal maintenance activities is shown in Figure 8-2. In addition to accumulating electrostatic charges, the human body can retain electrostatic potential over time. An example of this is a low relative humidity, it may take a human form more than one hour to bleed off 400V potential. A graph that contrasts electrostatic potential with bleed-off time is outlined in Figure 8-3 for Teflon and concrete floors. This general trend highlights the need for using ESD control devices, particularly in repair shops where relative humidity is low.

8-3.4. PRIME SOURCES OF STATIC CHARGE. Some items create or maintain charges better than others. This is because some materials readily give up electrons while others tend to accumulate excess electrons. An item having an excess of electrons is negatively charged while an item having an electron deficit is positively charged. When two materials are rubbed together, then separated, one material gains electrons and the other loses electrons. This also occurs when materials flow relative to one another, such as gas or liquid over a solid. These electron charges are equal, and in the case of nonconductors tend to remain in the localized area of contact. Charges on conductors, however, are rapidly distributed over its surface and the surfaces of other conductive objects it contacts. These items can be considered as typical prime charge sources. Prime sources are essentially insulators and are typically synthetic. Table 8-1 lists typical prime charge sources. Electrostatic charge on these items may be extremely high, as the charge is localized and is not distributed over the entire surface. This charge could be reduced in high humidity environments, as this allows more conduction/ distribution of the charge. Table 8-2 lists typical electrostatic charges generated by personnel in a repair facility.

8-3.5. SPECIAL CONSIDERATIONS. Many microelectronic circuit repair facilities include clean room conditions. These conditions are designed to maintain the absence of dust and other particles in the maintenance environment. Materials used in this

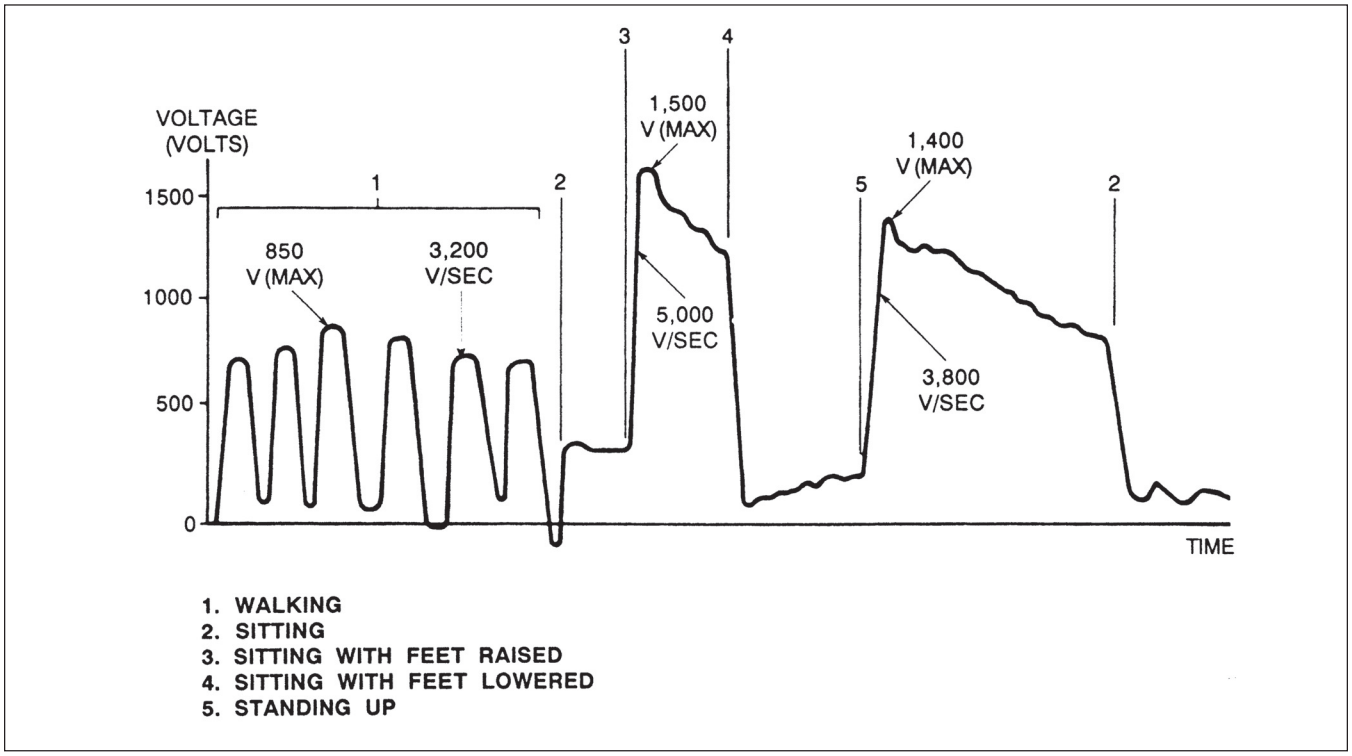

Figure 8-2. Graph of Human Body Generated Charge versus Activity

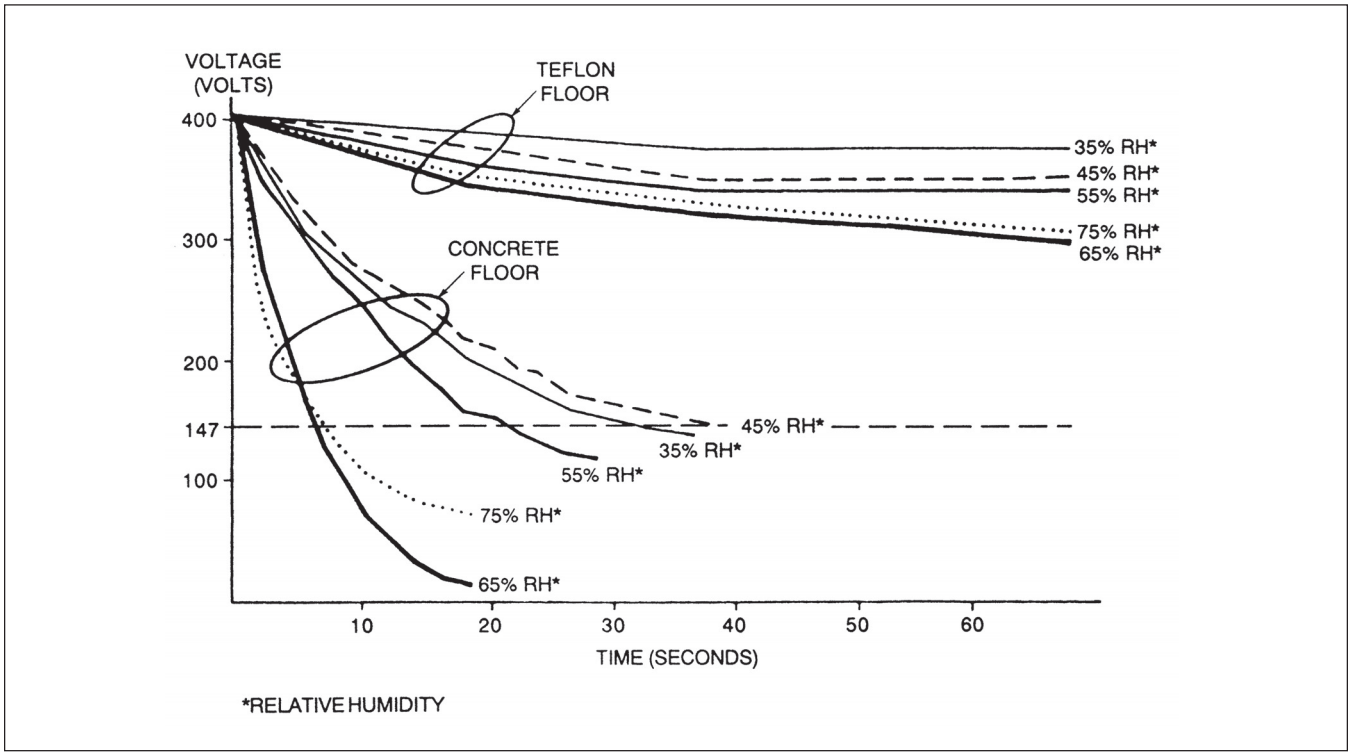

Figure 8-3. Graph of Human Charged Voltage versus Bleed-Off Time at Varying Humidities

Table 8-1. Typical Prime Charge Sources

Prime Source	Composition/Application
Work Surfaces	Formica Finished wood Synthetic mats Metal plates
Floors	Wax-finished Vinyl
Clothes	Clean room smocks Personal garments (i.e., wool, nylon, dacron)
Chairs	Finished wood Vinyl Fiberglass
Packaging/Handling	Polyethylene bags, wraps, envelopes; bubble pack; foam; plastic trays, boxes
Repair/Cleaning Areas	Spray cleaners Solder suckers Solder irons Solvent brushes
Moving Air	Forced air drying of equipment/components

environment eliminate contamination during handling of devices. However, their use in conjunction with other materials often result in a very high static charge. Specifically, synthetic materials are used frequently because they are nonporous, flexible, and easily fabricated. Static charges can be generated from common materials found in the clean room or maintenance work place. For example, latex finger cots rubbed against a plastic box can charge to 6 kV while bare fingers can generate only 200 volts. Note that even 200 volts of static charge can degrade or destroy some ESDS devices. An additional source of static charge is created during wave soldering and general cleaning operations. Normally, low surface energy solvents such as chlorinated hydrocarbons are used in these operations. Although such solvents provide excellent cleaning capacity, rapid evaporation, and noncorrosive properties, they increase static control problems. As indicated in Table 8-3, rubbing a printed circuit board (PCB) with a solvent saturated cloth can generate substantial charges. This is much like rubbing the PCB with a Teflon or chlorinated plastic film. This problem can be solved by using a chlorinated-glycol hydrocarbon antistatic solvent.

8-4. TYPES OF ESD FAILURES.

8-4.1. INTERMITTENT FAILURES. ESD can cause intermittent or upset failures as well as hard failures of aircraft electronics. Intermittent or upset failures can occur on Large Scale Integration (LSI) ICs when equipment is in operation. This is usually characterized by a loss of information or temporary distortion of its functions. No apparent hardware damage occurs and proper operation resumes automatically after ESD exposure and system reset. Upset failures can be the result of a spark near the equipment. The EMP generated by the spark causes erroneous signals to be routed through equipment circuitry. Upset failures can also occur by capacitive/inductive coupling of ESD pulses or direct discharge through a signal path providing an erroneous signal.

Table 8-2. Typical Electrostatic Charges

Means of Generation	Electrostatic Charge (Volts)	
	10 to 20% Relative Humidity	65 to 90% Relative Humidity
Walking across carpet	35,000	1,500
Walking over vinyl floor	12,000	250
Worker at bench	6,000	100
Maintenance Action Form (MAF) bag (work card envelope)	7,000	600
Common poly bag picked up from bench	20,000	1,200
Work chair padded with polyurethene foam	18,000	1,500
Styrofoam coffee cup	5,000	Undetermined
Plastic solder sipper	8,000	Undetermined

Table 8-3. ESD Effect of Various Solvents

PC Board Rubbed With:	Typical Static Charge (Volts)
Fluorinated cleaner	5,000
Antistatic cleaner	0
Water	0

8-4.2. CATASTROPHIC FAILURES. These are failures that result from direct contact between an IC and a high voltage static charge, sufficient to cause breakdown in the device.

8-4.2.1. Direct Failures. While upset failures occur when the equipment is operating, catastrophic failures can be the results of electrical overstress of electronic parts caused by ESD. For example, discharge from a person or object, an electrostatic field, or high voltage spark discharge. Some catastrophic failures may not occur until some time after exposure to an ESD. Such is the case with marginally damaged ESD parts, which require operating stress and time to cause further damage and complete failure. Only certain parts seem to be susceptible to this latest failure process. There are some types of catastrophic failures that could be mistaken for upset failures. For example, ESD could result in aluminum short circuiting the SiO_2 dielectric layer of an IC. Subsequent high currents flowing through this circuit path could vaporize the aluminum and block current flow.

8-4.2.2. Latent Failures. These are failures that occur by damage of the device over time and usually reduce operating life. This suggests that an IC can be subjected to repeated exposure to static charges that are cumulative in effect. Latent failure may be confused with upset failure if it occurs during equipment operation.

8-5. FAILURE MECHANISMS.

8-5.1. GENERAL. Regardless of the type of failure, the device itself is either power sensitive or voltage sensitive. Voltage sensitive parts fail due to dielectric breakdown of insulating layers. Other parts are power sensitive, where pulse, shape, duration, and energy can produce power levels resulting in thermal breakdown. For example, hybrid ICs are voltage sensitive in the form of thick film resistors. Likewise, piezoelectric crystals are voltage sensitive. Some monolithic ICs are power sensitive.

8-5.2. ESD RELATED FAILURE MECHANISMS. ESD related failures typically include the following:

a. Thermal secondary breakdown.

b. Metallization melt.

c. Dielectric breakdown.

d. Gaseous arc discharge.

e. Surface breakdown.

f. Bulk breakdown.

g. Chip memory losses.

8-5.3. VOLTAGE AND POWER DEPENDENT FAILURE MODES. Thermal secondary breakdown, metallization melt, and bulk breakdown are power-dependent failure mechanisms. Dielectric breakdown, gaseous arc discharge, and surface breakdown are voltage-dependent failure modes. Refer to MIL-HDBK-773, MIL-HDBK-263 and MIL-STD-1686 for more detailed descriptions of these microelectronic/semiconductor device failure mechanisms.

8-6. IDENTIFICATION OF ESD MATERIALS.

NOTE

For further assistance in identifying ESD devices, avionic technicians should refer to MIL-HDBK-773, MIL-HDBK-263, and MIL-STD-1686.

8-6.1. GENERAL. The electronic industry has only recently become aware of the cost and hazards of ESD Materials that have been in the military supply system for several years may not be identified as ESD sensitive. Avionic technicians should treat any device as ESD if there is any doubt as to its classification. For example, a piece of avionic equipment may use a small relay that has a driver or diodes encased within it. These packages are probably ESD sensitive devices, yet relays are not usually considered ESD.

8-6.2. SUPPLY SYSTEM PRACTICES. The military supply system currently marks packages containing ESD items as shown in the examples of Figure 8-4. However, these markings are subject to change as the ESD program established by each parent service organization becomes more sophisticated. Therefore,

Figure 8-4. Examples of Typical Markings on ESD Sensitive Item Package

users should be alert for different markings as well as those shown. The presence of the symbol indicates the item is considered an ESD sensitive device.

8-6.3. ESD CLASSIFICATION. Electronic components subject to ESD related damage or failure are grouped as ESD materials. These are grouped into three major categories as defined in MIL-STD-1686 (Table 8-4):

a. Class 1: Extremely Sensitive: Voltage ranges from 0-2 kV.

b. Class 2: Sensitive: Voltage ranges from 2-4 kV.

c. Class 3: Less sensitive - Voltage ranges from 4-16 kV (Class 3 items are sometimes considered non-ESD sensitive).

8-7. DISSIPATION OF STATIC CHARGES.

8-7.1. GENERAL. Dissipation of static charge usually occurs by one of three different paths as shown in Figure 8-5. These paths represent corona discharge into the air, surface conduction to ground and conduction through the volume of the material to ground. Therefore, the tendency to build up static charge may be decreased by increasing these paths of conduction away from the material.

8-7.2. GENERAL SOLUTIONS TO STATIC CHARGE PROBLEMS. The techniques that can be used include increasing corona discharge by ionization of surrounding air, increasing surface electrical conductivity, or increasing bulk material electrical conductivity. It is often very difficult to promote corona discharge into the air for most avionics systems. Therefore, static protection has been commonly brought about by methods that would increase the surface and/or volume electrical conductivity.

8-7.3. ESD PROBLEM SOLUTIONS. To protect ESD devices, it is important to provide a conductive path to ground. This provides for rapid dissipation of static electrical charge. Practical solutions of dealing with ESD may be summarized as follows:

a. Dissipate by distribution over conductive surface.

b. Shield ESD sensitive components from induced potentials (shielding).

c. Provide conductive path to ground.

8-8. EFFECTS OF CORROSION.

8-8.1. GENERAL. Corrosion can degrade the electrical and mechanical properties of ESD protection systems. The exposure of ESD devices/ESD protection systems to various environmental conditions can significantly increase their susceptibility to damage from the discharge of static electricity. Under field service conditions, military avionics experience corrosion between metal surfaces such as electrical bonding/grounding connections. This problem is two-fold. First, corrosion between metal surfaces in avionics creates structural weaknesses that undermine its effectiveness to shield ESDS components from induced potentials. Second, the corrosive process creates nonconductive products that decrease the paths of conduction of static charge away from the device or assembly.

8-8.2. CORROSION-INDUCED CHARACTERISTICS. Although no valid method of evaluating the effect of corrosion on ESD sensitivity exists presently, certain trends can be identified. ESD protection for enclosed avionic equipment can degrade in performance over time. This occurs often after only 3 or 4 months of exposure to the field environment and normal use. Galvanic corrosion is usually the principal form of attack. This type of corrosion can rapidly

Table 8-4. ESD Sensitivity Categories

Class 1: Extremely Sensitive - Voltage ranges from 0 to 2 kV
Unprotected metal oxide semiconductor (MOS) and field effect transistors (FETs) Integrated Circuits (ICs). Particularly very large scale integration (VLSI) devices, including microprocessors.
MOS capacitors (op amp internal compensation).
Junction FETs (JFETs) and low current silicon controlled rectifiers (SCRs) with current capacity less than 0.15 A.
Microwave maximum operating frequency of very high frequency (VHF) transistors and ICs. Especially Schoattky device with more than 1 gigahertz.
Precision IC voltage regulators (tolerance less than 0.5%).
Precision thin film resistors (tolerance less than 0.1%).
Low power thin film resistors (power consumption less than 0.5 W).
VLSI with dual-level metallization.
Hybrids using Class I parts.
Class 2: Sensitive - Voltage ranges from 2 to 4 kV
MOS with ESD protection networks (CMOS, NMOS, PMOS).
Schottky diodes (silicon switching diodes).
High-speed bipolar logic, emitter coupled logic (ECL), and low power Schottky.
Transistor logic (LS-TTL).
Schottky TTL (S-TTL).
Linear ICs.
Precision resistors (RL).
LSI devices with ESD protection circuits.
Hybrids utilizing Class 2 parts.
Class 3: Less Sensitive - Voltage ranges from 4 to 16 kV (sometime considered non ESD sensitive)
Small signal diodes (power consumption less than 1 W).
Small signal transistors (power consumption less than 5 W).
Low speed bipolar logic (TTL), diode transistor logic (DTL), and high threshold TTL (H-TTL).
Quartz and piezoelectric crystals.

destroy a bonding connection if suitable precautions are not observed (refer to Chapter 6). Damage to bonding/grounding hardware can cause the buildup of static potentials that could result in a spark discharge. Without regular maintenance, the buildup of metal oxides, absorbed atmospheric pollutants, dust, and field debris will also contribute to ESD shielding degradation of the avionic enclosure. This buildup introduces a nonconductive film between electrical contact materials which can often severely degrade ESD protection.

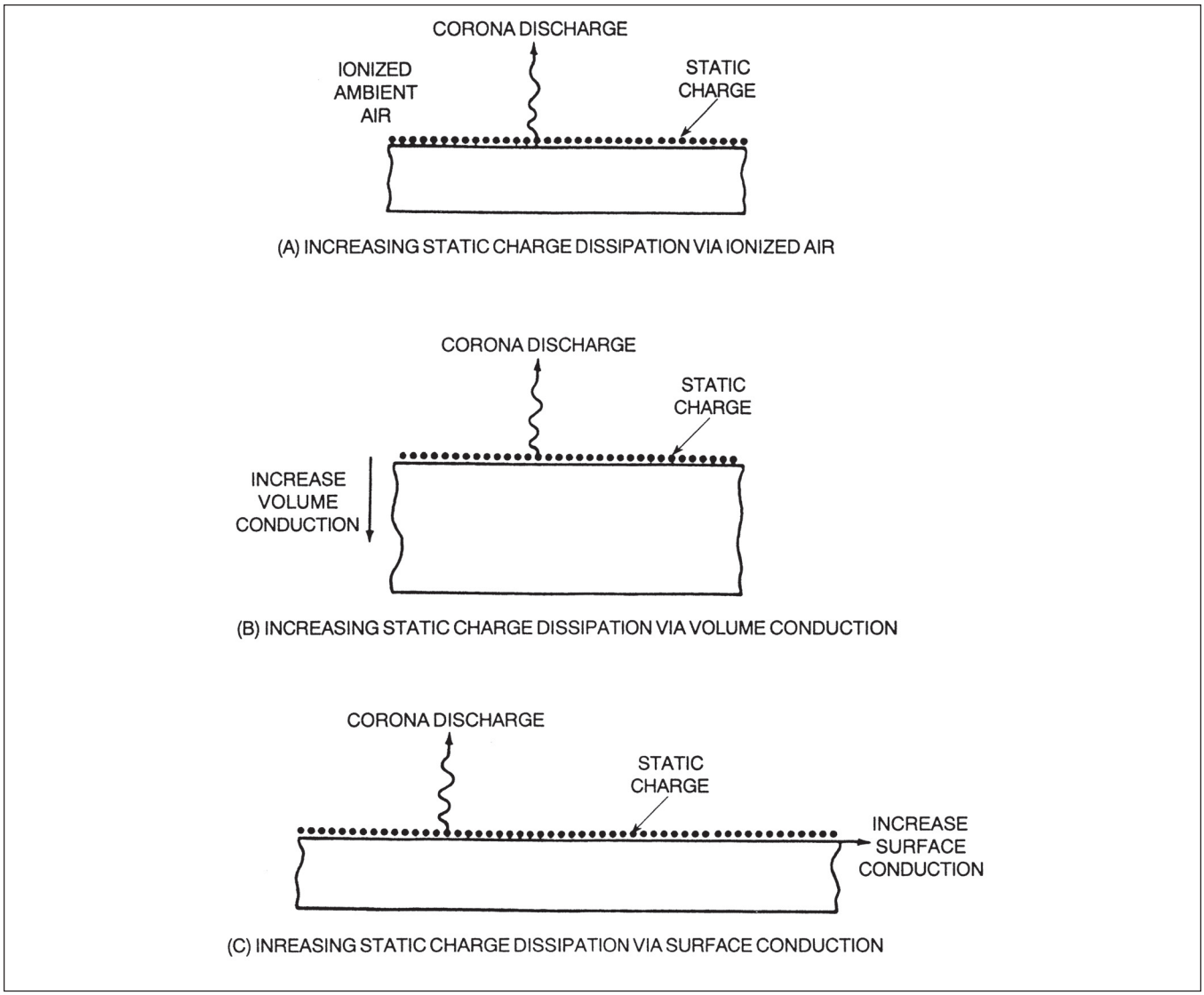

Figure 8-5. Dissipation of Static Charges

8-9. RECOMMENDED PRACTICES FOR ESD EQUIPMENT, MODULES, AND COMPONENTS.

NOTE

Some ESD control procedures involve conditions or operations that may produce corrosion. Special handling methods and materials must be used to prevent equipment damage. In case of conflict, refer to the applicable service directives and TO 00-25-234 (Air Force only).

8-9.1. BASIC ESD PRECAUTIONS. ESD precautions are not limited to manufacturing or component repair personnel only. Anyone handling, processing, or using ESD devices must take precautionary steps. It would be futile for component repair personnel to take full precautions, only to turn the repaired item over to technicians who ignore all precautions and inadertvently destroy the module. Maintenance personnel should refer to MIL-HDBK-773, MIL-HDBK-263, and MIL-STD-1686 for more detailed descriptions of ESD control measures.

8-9.2. ESD PACKAGING PRACTICES. Packaging of ESD items must only be done at an ESD protective workstation. See Figure 8-6.

a. Packaging for electrostatic discharge protection requires the use of one or more of the following materials:

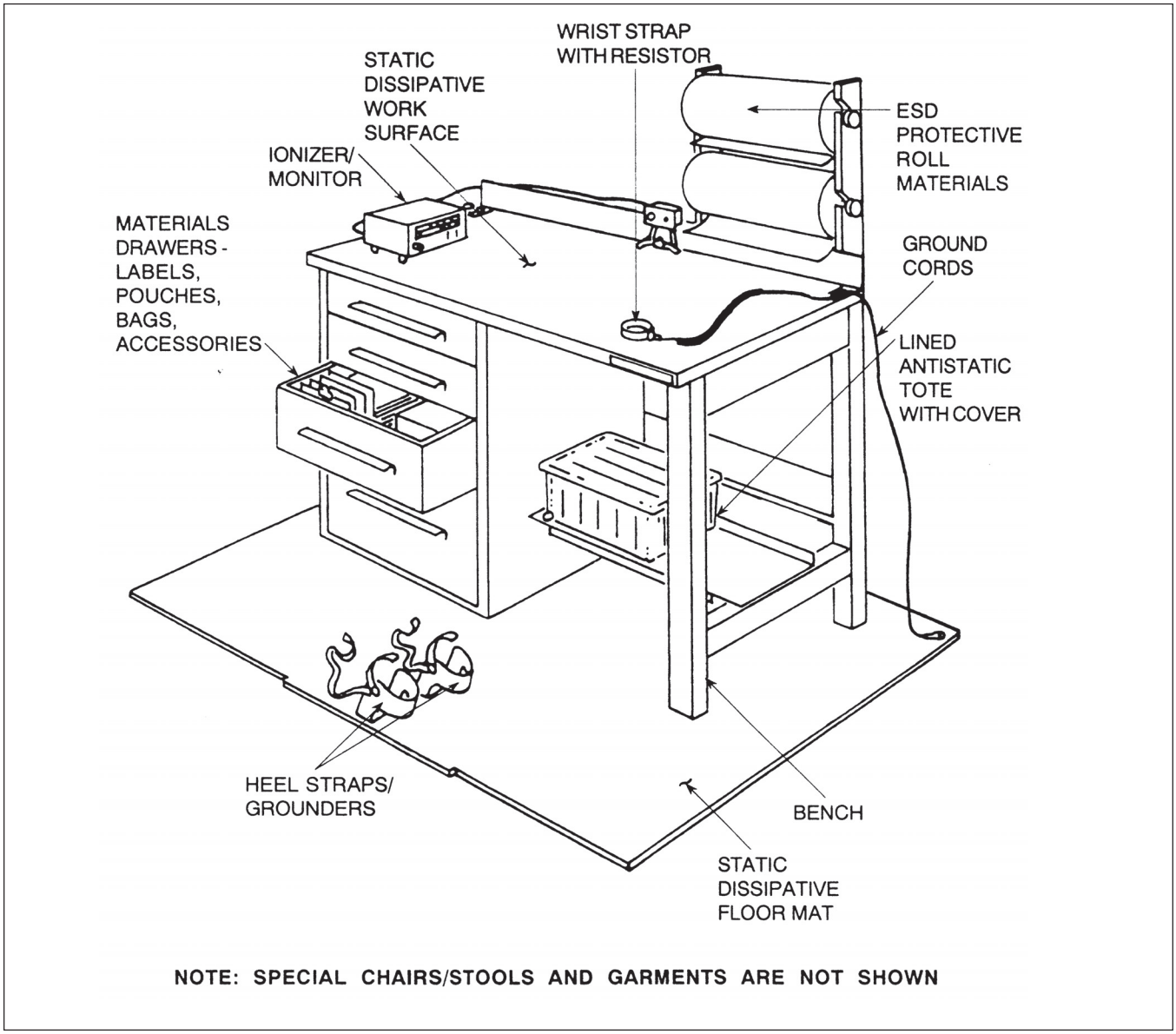

Figure 8-6. Typical ESD Protective Packaging Worksttion

(1) MIL-PRF-81705, Type II barrier material, transparent, waterproof, electrostatic protective, static dissipative.

(2) Cushioning material, flexible, cellular, plastic film.

(3) Cushioning material, plastic open cell.

(4) PPP-C-1797, cushioning material, resilient, low density, unicellular, polyproplene foam.

b. ESD items may be further protected in reusable ESD fast pack containers, PPP-B-1672 Type II Style D or shielded in a bag or pouch conforming to MIL-PRF-81705 Type I barrier material, water-vaporproof, grease-proof, electrostatic and electromagnetic protective (opaque).

c. Protection will be provided to prevent physical damage and to maintain leads and terminals in an as-manufactured condition during handling and transportation.

d. Packaging of ESD items shall be in accordance with MIL-E-17555 for electrostatic protection. Marking shall be in accordance with MIL-STD-129.

8-9.3. ESD WORKSTATION SHOP PRACTICES.

a. Control humidity within 40% to 60% range. Humid air helps dissipate electrostatic charge.

b. Ionized air helps to bleed off static charges.

c. Prohibit prime generators (Table 8-1) and carpeting from avionics shop areas.

d. Chairs and stools should have conductive surfaces and should be grounded through a 250 kilohm to 1 megohm resistor to ground.

e. Trays, carriers, cushioning materials, and bags should be made of conductive ESD protective material.

f. Electrical equipment, tools, or soldering irons that come in contact with ESD devices should be grounded. Resistance to top of soldering irons should be less than 20 ohms. Only ESD safe tools should be used.

g. Test equipment with exposed metal surfaces should be grounded.

h. Personnel handling ESD devices should wear long sleeve ESD smocks or short sleeve shirts. Prohibit materials such as common plastic, rubber, or nylon.

i. Personnel grounding straps should have minimum resistance of 250 kilohms and maximum of 2 megohms.

8-9.4. ESD DEVICE HANDLING PRACTICES. Damage to ESD items may occur if untrained personnel are allowed to handle ESD items when the items are outside of an ESD protective package.

a. Protective apparel should be checked frequently, especially after cleaning, by scanning personnel with an electrostatic field meter to monitor for damaging ESD voltages.

b. Be sure to attach the wrist strap (mandatory) and heel straps (if used) before handling any ESD items.

c. Avoid the presence of any nonantistatic or insulative material near work areas. For example, styrofoam cups, plastic or masking tape, wrapping or barrier materials, or synthetic materials.

d. Do not store or use magnetic material near work areas.

e. Do not perform stretch or shrink-wrapping operations within the ESD-controlled work area.

f. Do not use waxes, polishes, or similar materials on floormats or tabletops. They may deposit an insulating layer of residue. This reduces or eliminates the effectiveness of the floormat or tabletop. For the same reason, the use of topical antistatic spray is not recommended on packaging materials.

g. Sweep dust and dirt from the tabletop and floormats as often as needed to prevent any accumulation. Dirt will also insulate these surfaces and make them ineffective.

h. Antistatic pouches should be used for technical manuals, drawings, and work instructions rather than plain plastic pouches.

i. Ensure all containers, tools, test equipment, and fixtures are grounded before and/or during use by direct ground or by touching a grounded surface.

j. Avoid friction producing activities near ESD devices. For example, removing smocks, wiping feet, sliding objects over surfaces.

k. Wear cotton smock or other antistatic clothing.

l. Prohibit prime generators (Table 8-1) from ESD areas.

m. Place ESD protective material on grounded surface to remove any charge before opening package.

n. Remove ESD item from package only after grounding and place item on grounded surface.

o. Use noncorrosive ESD protective conductive foam or connect shorting clip, or bars to terminal of ESD device.

p. Perform periodic electrostatic checks to ensure work station meets specification.

8-9.5. TESTING AND/OR REPAIR PRACTICES.

a. Ensure work area, equipment, and work strap assembly are grounded.

b. Attach wrist strap and place metal tools and accessories on grounded bench surfaces.

c. Place conductive container on bench. Remove component or assembly from package. Remove shorting device if present. Handle components by their body and place on conductive work surface/test fixture.

d. Compressed gases shall not be used to cool fixtures.

e. Test through connectors or tabs only.

f. After testing, replace shorting packages and protective packaging.

g. Do not use Simpson 260 (or equivalent) multimeter to test parts. Instead use the Fluke 8000A or other high-impedance digital multimeter (DMM).

h. Dielectric strength tests are prohibited.

i. Only the use of anti-static type solvents is allowed.

j. Heat guns for test or curing are prohibited.

k. Drying lamps, photo spots, and thermal probes are allowed.

l. Do not remove components or assemblies from their sockets with power applied.

m. Apply dc voltages prior to applying signal inputs.

n. The use of air to clean components/assemblies is prohibited unless a filtered ionizing air gun is used.

o. Do not use solvent ultrasonic cleaning bath for component assemblies.

p. Device supply connections on the assembly should be made prior to making the ground connection.

q. Cure conformal coatings by normal ambient curing or in an oven that contains grounding provisions to prevent static charge buildup.

8-10. PREVENTION, TREATMENT, AND CONTROL OF CORROSION ON ESD SENSITIVE EQUIPMENT.

8-10.1. GENERAL. ESD damage to aircraft electrical/electronic devices can be caused by voltage or current depending on the item's composition and construction. This damage can be caused by direct contact or by the electrostatic field associated with other charged items. It is important to note that some modern military circuits are sensitive to voltages as low as 25 volts. The threshold of sensitivity or voltage level required for a human being to feel a static discharge is approximately 3500 volts. Therefore, ESD devices can be damaged by maintenance personnel without their knowledge. ESD control measures must be employed to minimize the impact of ESD damage on aircraft electrical/electronic parts, assemblies, and equipment.

8-10.2. CORROSION PREVENTIVE MAINTENANCE AND CONTROL. ESD devices must be protected from static fields and/or static discharge when being transported, handled, or stored. The following preventive measures will help provide this protection.

a. Handle ESD devices only at protected work stations. These sites eliminate all sources of ESD with good grounding techniques by electrically bonding all the surfaces, tools, and furnishings together. A protective stool should also be used and any support equipment (soldering irons, text fixtures, test equipment, lights) must be grounded.

b. ESD devices should be covered or packaged in ESD-protective packaging when not being handled.

c. Conductive carriers protect static sensitive devices by shielding them from static. These carriers are used to transport, store, and ship static sensitive devices and should be placed on a conductive table top. This allows safe removal of their contents. Example of conductive carriers are conductive trays, boxes, and containers.

d. Shunting mechanisms short circuit all the leads of a device. This enables the entire device to be at the same electrical potential and prevents ESD. Shunting mechanisms for discrete components include shorting clips, rings, and conductive foam. Conductive shunt bars are a type of shunting mechanism for printed circuit boards (PCBs).

e. Nonconductive objects that can generate and hold different static potentials on different areas on their surface are poor conductors and cannot be grounded. Static neutralizing equipment should be used to eliminate static charges on nonconductive objects. Use of an ionized air blower will neutralize static charge by continuously blowing a cloud of ionized air over the surface.

f. Personnel should not wear synthetic fiber clothes. Cotton clothes with short sleeves or a cotton smock over clothing are recommended.

g. Work areas shall be clear of static hazards such as ordinary plastics, coffee cups, and candy wrappers.

h. Personnel shall only use uninsulated hand tools when working with electrostatic sensitive devices. Do not use plastic-coated tweezers, plastic lead-forming tools, or plastic solder suckers. Also, personnel shall use only natural bristle brushes.

8-10.3. ESD PROTECTIVE SYSTEMS CORROSION REPAIR AND TREATMENT. Corrective maintenance of ESD protection systems depends on the type of protection system involved, size of the damaged area, and degree/type of corrosion. Control, treatment, and repair measures must be employed to minimize the impact of corrosion on ESD protection systems. Maintenance personnel should refer to Chapter 6 and the applicable service directives for specific repair procedures.

CHAPTER 9
PRESERVATION AND PACKAGING

9-1. PURPOSE. The materials, equipment, and techniques described in this chapter are intended to assist the avionic technician at the Intermediate Maintenance Activity (IMA) in preserving, packaging, handling, and shipping avionic equipment.

9-2. PRESERVATIVES.

9-2.1. GENERAL. Surfaces and components not normally conformal coated or painted need preservation. Cleanliness and elimination of moisture are keys to avoiding corrosion. Since it is impossible to guarantee a dry, moisture-free environment, preservation of equipment is essential. In today's avionic systems, miniaturization has resulted in microminiature circuits no longer than a pencil eraser. The slightest amount of corrosion can cause a whole system to fail. Preservation has become an essential part of the repair and maintenance of avionic systems.

9-2.2. WHY PRESERVE.

a. To protect nonmoving parts by filling air spaces, displacing water, and providing coatings.

b. To protect components such as hinges, control cables, gears, linkages, or bearings, from wear by providing lubrication.

c. To protect nonoperating or idle equipment.

9-2.3. WHEN TO PRESERVE. Preservatives should always be used:

a. After avionic cleaning.

b. On avionic equipment prior to shipment.

c. On equipment or components that are nonoperating or idle (including those awaiting parts).

d. Whenever access is achieved to parts normally inaccessible for inspection without disassembly and inspection.

e. Whenever paint films in difficult-to-protect areas require additional preservation.

f. After immersion or exposure to fresh water, salt water, or fire extinguishing agents.

g. Whenever the corrosion protection system has failed in service.

9-2.4. WHAT TO PRESERVE. Preservatives should be used only where their application and maintenance will not hamper circuit or component operation. Components that do not require preservation are listed in paragraph 9-2.5. Most preservatives form a nonconductive film that acts to insulate two mating surfaces. For example, preservative on a relay's mating contacts will degrade operation of the relay. Each piece of avionic equipment should be inspected. With the assistance of the applicable service directives, areas requiring preservation should be noted and preserved on a scheduled basis. The following items may require preservation on a scheduled basis:

a. Hinges and door latches.

b. Electrical connectors and receptacles.

c. Shock mounts, rigid mounts, and associated brackets.

d. Any dissimilar metals not otherwise preserved.

e. Antenna mounts, brackets, hardware, and housings.

f. Fasteners, screws, nuts, and bolts.

g. Terminal boards, bus bars, and junction boxes.

h. Equipment lids on the interior or exterior of equipment that are susceptible to moisture.

i. Solder joints not otherwise conformal coated.

j. Unpainted mounting brackets, equipment racks, and shelving.

k. Unpainted equipment covers, lids, and chassis.

l. External and internal surfaces of coaxial connectors.

m. External surfaces of cooling system joints.

n. Grounding straps and wires.

9-2.5. WHAT NOT TO PRESERVE. The following items shall not be preserved or come in contact with preservatives:

a. Laminated circuit boards that are conformal coated.

b. Nonmetallic surfaces such as control box faceplates (acrylic).

c. Tunable capacitors and inductors.

d. Internal surfaces of waveguides.

e. Internal surfaces of tuned tanks.

f. Relay and circuit breaker contacts.

g. Fuses.

NOTE

Only preservative materials approved by the parent service organization shall be used on military aircraft and avionic systems. Volume IV and V are provided to ensure the availability of approved materials and equipment.

9-2.6. PRESERVATIVE MATERIALS. Preservatives may also act as water-displacing materials (refer to paragraph 9-2.7.1.) and lubricants. Table 9-1 contains a list of authorized preservative compounds for avionic equipment.

9-2.7. HOW TO PRESERVE. The various specific applications of preservatives are covered in Chapter 6. The following are general application procedures that apply in most cases.

CAUTION

Extreme care should be taken when applying the corrosion preventative compounds, MIL-PRF-81309 or MIL-L-87177, to avoid contact with plastics such as polysulfone, polycarbonate, and acrylic. Such contact will crack or craze these plastics.

9-2.7.1. MIL-C-81309/MIL-L-87177. Water-displacing corrosion preventive compounds, MIL-C-81309 Type II or III (Volume IV or V, Chapter 2) or MIL-L-87177 (Air Force only, Volume V, Chapter 2) shall be applied as follows:

9-2.7.1.1. Clean surface of dirt, soil, contaminants, and corrosion products as specified in Chapter 6.

9-2.7.1.2. When necessary, apply pressure sensitive tape, SAE-AMS-T-21595 Type I (Volume IV or V, Chapter 2), to all components not to be preserved (refer to paragraph 9-2.5. for list of items).

Compound, Corrosion Preventive 3
Water-Displacing
MIL-C-81309

9-2.7.1.3. Apply an even, thin film to the surface. Ensure thorough coverage of dissimilar metal surface contact areas, crevices, and water entrapment areas. Avoid excessive application. Preservative will penetrate into crevices.

9-2.7.1.4. Remove pressure sensitive tape, as applicable.

9-2.7.2. MIL-PRF-16173. Corrosion preventive compound, MIL-PRF-16173 Grade 4 (Volume IV or V, Chapter 2), shall be applied as follows:

9-2.7.2.1. Clean surface of dirt, soil, and corrosion products as specified in Chapter 6.

Compound, Corrosion Preventive 3
Water-Displacing
MIL-C-81309

9-2.7.2.2. Apply water-displacing compound, MIL-C-81309 Type II (Volume IV or V, Chapter 2) or MIL-L-87177 (Air Force only, Volume V, Chapter 2) as specified in paragraph 9-2.7.1. prior to applying MIL-PRF-16173.

9-2.7.2.3. When necessary, thin corrosion preventive compound, MIL-PRF-16173 Grade 4 (Volume IV or V, Chapter 2) with degreasing solvent, MIL-PRF-680 Type III (Volume IV or V, Chapter 2) to working viscosity.

Table 9-1. Preservative Compounds for Avionic Equipment

Specification	Intended Use	Application	Restrictions
Corrosion Preventive Compound, Water-Displacing, Ultra-Thin Film, MIL-C-81309 Type II	Displacement of water; short term corrosion protection of metal surfaces during shipment, storage, and in-service use; corrosion protection of moving parts where some lubrication is required, such as hinge areas, bomb racks, and sliding parts. Also used as a waterless cleaner.	Apply a soft very thin (0.5 mil) translucent, light amber coating by dipping, spraying, brushing, or spraying from a pressurized container. Can be removed with cleaning solvent.	Do not use on interior surfaces of electrical connectors, coaxial connectors, receptacles or waveguides. Do not use around oxygen, oxygen fittings, or oxygen regulators, since fire or explosion may result.
Corrosion Preventive Compound, Water-Displacing, Ultra-Thin Film, Avionics Grade, MIL-C-81309 Type III	General preservative for internal areas of avionic equipment; internal areas of electrical connectors, receptacles, and solder joints. Contains water-displacing properties.	Apply by spraying an even, thin film to the surface. Can be removed with cleaning solvent.	Not intended for use on exterior surfaces of avionic equipment. Deposits a thin film which must be must be removed for proper function of contact points and other electromechanical devices where no slipping or wiping action is involved. Do not use around oxygen, oxygen fittings, or oxygen regulators, since fire or explosion may result.
Corrosion Preventive Compound, Solvent Cutback, Cold Application MIL-PRF-16173 Grade 4	General preservative for external surface exposed to elements and moisture, including: mounting racks, shelving, brackets, radar plumbing, shock mounts, rigid mounts, antenna hardware, general hardware, hinges fasteners, ground straps; and exterior surfaces of electrical connectors, coaxial connectors, and receptacles.	Apply by brush or spraying an even thin film to the surface. Material presents a semi-transparent film. Can be removed with cleaning solvent.	Do not use on interior surfaces or avionic equipment. Do not use on interior surfaces of electrical connectors, coaxial connectors, or receptacles. Do not use around oxygen, oxygen fittings, or oxygen regulators, since fire or explosion may result. Must be applied over water displacing corrosion preventive compound, MIL-C-81309 Type III, to accomplish complete water-displacing and preservative on all areas exposed to elements and moisture.
Corrosion Preventative Compound, Clear (Amlguard) MIL-DTL-85054 (non-ODS)	Temporary repair of paint damage to exterior surfaces such as cracks and scratches; preservative for non-moving metal parts not requiring a lubricated surface; exterior surface of electrical connectors.	Apply by brush or spraying an even thin film to surface. A second coat may be applied after 30 minutes.	Do not use on interior surfaces or avionic equipment. Do not use on interior surfaces of electrical connectors, coaxial connectors, or receptacles. Do not use around oxygen, oxygen fittings, or oxygen regulators, since fire or explosion may result.
Lubricants, Corrosion Preventative Compound, Water Displacing, Synthetic, with added corrosion inhibitor MIL-L-87177 Type I Grade B (Air Force only) or Type II Grade B (Air Force only)	Water displacing lubricant and corrosion preventative, for use on in-service equipment and parts at temperatures from -65° F to +400° F	Apply by spraying an even, thin film to the surface. Two coats shall be applied. Allow to dry between coats. The combined thickness of the two coats after drying shall be 1.2 to 1.5 mils. Application by wiping is not recommended. Can be removed with cleaning solvent. Reapplication of compound is necessary after solvent cleaning or where coating has been damaged by abrasion.	Not intended for use on exterior surfaces of avionic equipment. Deposits a thin film which must be removed for proper function of contact points and other electromechanical devices where no slipping or wiping action is involved. Do not use around oxygen, oxygen fittings, or oxygen regulators since fire or explosion may result.

Compound, Corrosion Preventive 8
MIL-PRF-16173

9-2.7.2.4. Apply MIL-PRF-16173 Grade 4 with brush (Volume IV or V, Chapter 3), or spray an even, thin film to non-moving external areas.

9-2.7.3. Fasteners. Dip screws or fasteners in preservative and install. Where disassembly is frequent, use MIL-L-63460 or MIL-C-81309 Type II (Air Force may also use MIL-L-87177). When infrequent, use MIL-C-16173 Grade 4 for long term protection.

9-3. PACKAGING, HANDLING, AND STORAGE.

9-3.1. GENERAL. An avionic corrosion control program must include procedures for packaging, handling, and storage of avionic equipment and components. Preventive maintenance techniques are rendered useless if these procedures are not followed. Materials used to package, handle, or store avionic equipment must be compatible with the equipment and environment. Refer to MIL-STD-2073/1, MIL-E-17555, NAVSUP 484 (Navy), TO 00-85-3 (Air Force), and AR 746-1 (Army) for additional information on packaging and preservation.

NOTE

Some avionic equipment contains ESDS modules or components. Maintenance personnel should have ESD device handling procedures established by the applicable service directives. Failure to do so will jeopardize ESD device/mission integrity. Refer to Chapter 8 to avoid conflict with recommended practices for ESD equipment, modules, and components.

9-3.2. MAINTENANCE ACTIVITIES COMPLIANCE. Organizational/Unit and Intermediate Maintenance Activities shall comply with the following:

9-3.2.1. Use only metal or preserved wooden shelves for storing avionic equipment and components.

9-3.2.2. Provide polyethylene foam, A-A-59135 or A-A-59136 (Volume IV or V, Chapter 2), 1/2 inch thick, as cushioning for equipment on shelves, or pallets. Do not use horse hair, sponge-rubber, or similar materials.

NOTE

Refer to NAVAIR 01-1A-505 (Navy), TO 1-1A-14 (Air Force), or TM 55-1500-323-24 (Army) for information on electrical connector caps.

9-3.2.3. Plastic or metal caps shall be used for electrical connector protection, as specified in paragraphs 9-3.4. and 9-3.5.

CAUTION

Use only special handling/shipping containers for protection of avionics from shock.

9-3.2.4. Use cushioning material, cellular plastic film (bubble wrap), PPP-C-795 Class 1 (Volume IV or V, Chapter 2), for short term protection of equipment from handling and shock.

9-3.2.5. Use plastic bags, A-A-1799 (Volume IV or V, Chapter 2), for short term protection of uninstalled small components and microminiature PCBs against moisture and contamination.

9-3.2.6. Use unicellular polypropylene packaging foam, PPP-C-1797 (Volume IV or V, Chapter 2), and water vapor proof packaging material, MIL-PRF-131 Class 1 (Volume IV or V, Chapter 2), for long-term protection of miniature/microminiature circuit components, laminated circuit boards, and critical avionic components against moisture and contamination.

9-3.2.7. Comply with the requirements of MIL-STD-2073/1, MIL-E-17555, NAVSUP 484 (Navy), TO 00-85-3 (Air Force), or AR 746-1(Army) when shipping avionic equipment by air/surface.

9-3.2.8. For equipment requiring ESD protection, refer to Chapter 8.

9-3.3. HANDLING. Damage has occurred to avionic equipment because of incorrect/rough handling between repair shops and incorrect packaging methods. The best method of avoiding handling damage when transporting equipment is through the use of cushioning material (bubble wrap), PPP-C-795 Class 1 (Volume IV or V, Chapter 2). Bubble wrap is primarily used to absorb shock and is not intended as a preservation material. Packaging materials may absorb moisture through "breathing" as pressure changes occur. Bubble wrap should be placed around the component in both directions leaving the corners

open to avoid condensation. Use masking tape, SAE-AMS-T-21595 (Volume IV or V, Chapter 2) for securing bubble wrap. Use preservation and sealing tape, SAE-AMS-T-22085 Type II (Volume IV or V, Chapter 2) or masking tape, SAE-AMS-T-23397 (Volume IV or V, Chapter 2) as alternates.

9-3.4. PACKAGING AND STORAGE. Although packaging is a function of the Supply Department, many times avionic equipment is packaged by maintenance personnel. This is for shipping between shops, operating activities, or ships prior to/during deployments. Packaging methods are an important consideration because the time equipment is in transit could be lengthy.

9-3.4.1. Proper packaging should include provisions for the length of time equipment will be in storage. Equipment should be packaged for long-term protection if the length of storage time is uncertain.

9-3.4.2. Local packaging of avionic equipment and components shall apply the following procedures:

9-3.4.2.1. Plastic bags, A-A-1799 (Volume IV or V, Chapter 2), provide adequate protection against moisture and contamination for short-term, temporary storage. These bags shall be used during maintenance or repair operations of laminated circuit boards and small electrical/electronic components.

9-3.4.2.2. Barrier Material, Water Vapor Proof, MIL-PRF-131 Class 1 (Volume IV or V, Chapter 2), provides excellent protection against moisture and contamination. It is used during equipment transportation and long-term storage under all weather conditions. This material shall be used for long-term packaging of miniature/microminiature circuit components, laminated circuit boards, and other critical avionic components. Barrier Material, Water Vapor Proof, MIL-PRF-131 Class 1, shall be sealed with Sealing Machine, Electric Jaw (Volume IV or V, Chapter 3).

9-3.4.2.3. Unicellular polypropylene packaging foam, PPP-C-1797 (Volume IV or V, Chapter 2), is used for protection against shock and moisture. If protection against shock and handling is required in conjunction with Plastic Bags, A-A-1799 (Volume IV or V, Chapter 2), or Barrier Material, Water Vapor Proof, MIL-PRF-131 (Volume IV or V, Chapter 2), use the unicellular polypropylene packaging foam held in place by pressure sensitive tape, SAE-AMS-T-22085 Type II (Volume IV or V, Chapter 2).

9-3.4.3. For equipment requiring ESD protection refer to Chapter 8.

9-3.5. ELECTRICAL CONNECTOR AND WAVE-GUIDE CAPS. The use of plastic caps hinders contamination of equipment from airborne particles present in repair shops/supply spaces.

9-3.5.1. During Organizational/Unit level maintenance, the plastic cap can become foreign object debris (FOD) in an aircraft. In aircraft with engine or equipment removed for inspection or maintenance, many electrical connectors are exposed. Military standard metal covers shall be used in lieu of plastic covers in these cases.

CAUTION

No tape other than pressure sensitive tape, SAE-AMS-T-22085 Type II, is authorized for use on wave guides or electrical connectors. Air Force only refer to TO 00-25-234 for taping of wave guide connectors.

9-3.5.2. If military standard metal covers are not available, cap-off electrical connectors or waveguides with pressure sensitive tape, SAE-AMS-T-22085 Type II (Volume IV or V, Chapter 2). In no case will any other tape be used to seal or cap-off electrical connectors.

9-3.6. DESICCANTS. Desiccants are normally packaged in equipment crated for shipment or storage. In some cases, the desiccants are placed in systems aboard aircraft. Desiccant, MIL-D-3464 Type II (Volume IV or V, Chapter 2) is used to absorb moisture and lower the relative humidity when placed in a sealed container.

9-3.6.1. Desiccants may be ineffective for the following reasons:

a. Moisture may condense as water if the desiccant becomes saturated.

b. Desiccant is not in the right location.

c. Rapid change in temperature may produce precipitation before the desiccant can react.

d. Not enough desiccant is present.

CAUTION

Do not use loose desiccant in packaging of avionic equipment. The use of loose desiccant may cause damage to equipment.

9-3.6.2. The following considerations apply to desiccants:

a. Desiccants shall be in unruptured bags of sturdy construction.

b. Bags will be secured to prevent movement.

c. Desiccant bags shall not be placed on, nor permitted to come in contact with, unprotected surfaces.

d. Desiccants should be reactivated prior to reuse.

e. Do not remove desiccant from wrap unless ready for use.

9.3.6.3. If a desiccant bag should break open during transit, clean the avionic equipment immediately. Do not turn moving parts any more than absolutely necessary until all desiccant particles have been removed. Work out the desiccant particles with a brush and not more than 10 psi dry air pressure. Use Acid Brush, A-A-289 style opt. (Volume IV or V, Chapter 3), or Artist's Brush, (Volume IV or V, Chapter 3) for this purpose. An alternate method is the use of a brush and vacuum cleaner (Volume IV or V, Chapter 3).

CAUTION

Do not place humidity indicator in direct contact with metal. Chemicals used in the indicator may cause corrosion.

9-3.7. HUMIDITY INDICATORS. Humidity indicators, MIL-I-8835 (Volume IV or V, Chapter 2), shall be placed in containers with desiccants. A humidity indicator is used to determine if a desiccant is sufficiently active to maintain an acceptable relative humidity. Navy shall refer to NAVAIR 15-01-500 for instructions on installing humidity indicators.

CHAPTER 10
EMERGENCY PROCEDURES

10-1. GENERAL.

10-1.1. This chapter describes emergency corrosion cleaning and treatment procedures to be followed after aircraft accidents. Particular incidents may involve exposure to gross amounts of salt water, fire extinguishing agents, industrial pollutants, soot, or smoke. It is imperative that immediate action be taken to remove, clean, dry, and preserve all affected avionic equipment. When removal of this equipment is impractical, cleaning, drying, and preserving efforts shall be performed aboard the aircraft.

10-1.2. Steps outlined in the emergency procedures are normally used only to prevent further corrosion damage. Affected equipment will usually require further treatment at a higher level of maintenance. Treated equipment that is of questionable operating status should be forwarded to the nearest Intermediate Maintenance Activity (IMA). This will enable further cleaning, drying, preservation, inspection, and operational check. Equipment damaged beyond the capability of local repair shall be cleaned, preserved, packaged, and forwarded to the appropriate repair activity. Equipment shall be screened and repaired in accordance with the applicable service directives.

10-2. EMERGENCY RECLAMATION TEAM.

NOTE

In cases involving aircraft accidents, permission must be obtained from senior member of the accident investigation board prior to start of emergency procedures.

10-2.1. GOAL OF EMERGENCY RECLAMATION TEAM. The primary goal of the emergency reclamation team is to accomplish the necessary salvage operations after an aircraft accident. This includes the associated corrosion control efforts.

10-2.2. EMERGENCY RECLAMATION TEAM ORGANIZATION. Each reporting custodian shall designate a Corrosion Control Officer, whose duties include organizing and supervising the emergency reclamation team. Maintenance control will direct the team to accomplish salvage operations or corrosion control action. The size and composition of the team depends on the urgency of the situation and/or workload. Additional personnel, if required, will be selected and placed under the direction of the Corrosion Control Officer. In case of fire damage, the Materials Engineering Division of the cognizant activity must be contacted. This group will determine the effects of heat or excessive salt water contamination prior to continued use/repair of affected parts.

10-3. EMERGENCY PREPARATIONS.

10-3.1. REMOVAL PRIORITY. Emergency preparations shall include the preparation of priority lists for removal of equipment, emergency reclamation team planning, tools, materials, and equipment availability. For more specific information on removal priority of avionic equipment, refer to Volume II of this manual (Navy and Army) or TO 1-1-691 (Air Force).

CAUTION

Magnesium parts are particularly susceptible to corrosion attack while exposed to salt water, water immersion, or fire extinguishing agents. Avionic equipment known to contain magnesium components shall be given high priority emergency procedures. The procedure for identification of magnesium is contained in paragraph 5-2.3.

10-3.2. EQUIPMENT REPLACEMENT. Various degrees of damage will be encountered when equipment is exposed to salt water, water immersion, or fire extinguishing agents. Each maintenance officer shall prepare or have access to a list of equipment indicating removal priority. This information shall be used to make the decision to retain or replace equipment. Special attention shall be given to the availability of replacement parts, capability of the repair facility, and importance of continuing flight operations. In the event of an aircraft mishap, reclamation of the aircraft is secondary to preserving evidence necessary to support the Accident Investigation Board and associated engineering investigations. Emergency procedures shall not commence until authorized by the Accident Investigation Board.

10-3.3. REQUIRED TOOLS, MATERIALS, AND EQUIPMENT. Immediate availability of the necessary corrosion control tools, materials, and equipment will significantly aid in reducing further damage. Refer to material and equipment lists in Volume IV and V. Certain special items of equipment which will be useful and should be readily available are:

a. Dry Nitrogen Source.

b. Dry Air Source.

c. Vented Drying Oven, Forced Air. (Volume IV and V, Chapter 3)

d. Vented Drying Ovens, Bulb Type. (Volume IV and V, Chapter 3)

e. Hot Air Blowers. (Volume IV and V, Chapter 3)

f. Pump, Backpack. (Volume IV and V, Chapter 3)

g. Clean Empty 55 Gallon Drums.

10-3.4. PRODUCTION PLANNING. Whenever possible, all salvageable components of the aircraft shall be treated simultaneously. The most experienced personnel available shall be assigned to disassemble and process the aircraft. This will minimize damage and ensure that the work is accomplished in a thorough and competent manner. Whenever possible, examination and evaluation personnel shall be assigned to work with the disassembly and preservation crew. This enables unreclaimable items to be scrapped immediately and ensures that only areas exposed to corrosive agents are disassembled and treated. The time saved by this procedure may be utilized in preserving salvageable components.

10-4. EMERGENCY CLEANING PROCEDURES.

CAUTION

Cleaning compounds and solvents identified in Volume IV and V, Chapter 2, may react with some encapsulants or plastics used to form fire harness tubing, wire coatings, conformal coatings, gaskets, or seals. Test on a small area for softening or other adverse reactions prior to general application. Refer to Table 2-4 for further restrictions on these materials.

10-4.1. GENERAL. Where possible, the primary method of emergency cleaning (paragraph 10-4.2) shall be used. One of the alternate methods of emergency cleaning shall be used when a sufficient quantity of fresh water is not available.

10-4.2. PRIMARY CLEANING METHOD. The primary method for removing salt water and fire extinguishing agents shall be used when a sufficient quantity of fresh water is available.

a. Flush all internal and external areas with clean, fresh water. Whenever possible, units or components that have been removed should be immersed and flushed thoroughly in clean, fresh water. A 55-gallon drum may be used for this purpose. Tilt the equipment back and forth to aid in draining off excess water

WARNING

Compressed air used for drying can create airborne particles that may enter the eyes. Pressure shall not exceed 10 psi. Eye protection is required.

b. Blow off excess water with not more than 10 psi air pressure or dry nitrogen. Deflect jet of air off interior, back, and sides of enclosures to diffuse.

Compound, Aircraft Cleaning 4
MIL-PRF-85570

c. (N) (A) If any evidence of salt or fire extinguishing agents remain, a second cleaning action should be initiated, using a solution of one part Aircraft Cleaning Compound, MIL-PRF-85570 Type II (Volume IV, Chapter 2), to ten parts of distilled water. Scrub the affected areas with the solution. Flush thoroughly with fresh water and drain excess. The equipment may be immersed in fresh water to aid in removing hidden contaminants. Tilt the equipment back and forth to aid in draining excess water.

d. (AF) If any evidence of salt or fire extinguishing agents remain, a second cleaning action should be initiated, using a solution of one part Aircraft Cleaning Compound, MIL-PRF-87937 Type II or IV (Volume V, Chapter 2), to ten parts of distilled water. Scrub the affected areas with the solution. Flush thoroughly with fresh water and drain excess. The equipment may be

immersed in fresh water to aid in removing hidden contaminants. Tilt the equipment back and forth to aid in draining excess water.

e. Blow off excess water as specified in step b.

10-4.3. ALTERNATE CLEANING METHODS.

10-4.3.1. Solvent Method.

Solvent, Degreasing 7
MIL-PRF-680

a. If soil or soot remain on external equipment chassis, scrub the affected areas using Paint Brush (Volume IV or V, Chapter 3) and Degreasing Solvent, MIL-PRF-680 Type III or Cleaning Solvent (Volume IV or V, Chapter 2).

b. Collect excess solvent and dispose as hazardous waste.

c. Clean as specified in paragraph 10-4.2. steps c or d, and e.

10-4.3.2. Aircraft Cleaning Compound Method.

Compound, Aircraft Cleaning 4
MIL-PRF-85570

a. (N) (A) Dip a cloth or brush in mixture of one part Aircraft Cleaning Compound, MIL-PRF-85570 Type II (Volume IV, Chapter 2), in nine parts water. Rub over affected exterior and interior areas until contaminants become intermixed or emulsified. Wipe off thoroughly with Cleaning Cloth, CCC-C-46 Class 7(Volume IV, Chapter 2), removing both contaminant and cleaner.

b. (AF) Dip a cloth or brush in mixture of one part Aircraft Cleaning Compound, MIL-PRF-87937 Type II or IV (Volume V, Chapter 2), in nine parts water. Rub over affected exterior and interior areas until contaminants become intermixed or emulsified. Wipe off thoroughly with Cleaning Cloth, CCC-C-46 Class 7 (Volume V, Chapter 2), removing both contaminant and cleaner.

WARNING

Compressed air used for drying can create airborne particles that may enter the eyes. Pressure shall not exceed 10 psi. Eye protection is required.

c. Blow off excess solution with not more than 10 psi dry air pressure or dry nitrogen. Deflect jet of air off interior, back, and sides of enclosure to diffuse.

10-4.3.3. Water-Displacing Method. The water displacing method is to be used as a last resort and only for temporary preservation prior to thorough cleaning. Water-Displacing Corrosion Preventive Compound, Ultra-Thin Film, MIL-C-81309, or Water-Displacing Lubricant and Corrosion Preventive Compound, MIL-L-87177 Type I or II Grade B (AF only), will deposit a nonconductive film. This film must be removed for proper function of contact points and other electromechanical devices where no slipping or wiping action is involved. Tag equipment with appropriate marking and indicate application of the corrosion preventive compound. This compound is easily removed with Degreasing Solvent, MIL-PRF-680 Type III.

WARNING

Compressed air used for drying can create airborne particles that may enter the eyes. Pressure shall not exceed 10 psi. Eye protection is required.

a. Blow off excess water with not more than 10 psi dry air pressure or dry nitrogen. Deflect jet of air off interior, back, and sides of enclosures to diffuse.

Compound, Corrosion Preventative 3
Water-Displacing
MIL-C-81309

b. (N) (A) Totally immerse equipment in a 55-gallon drum of Water-Displacing Corrosion Preventive Compound, Ultra-Thin Film, MIL-C-81309 Type II (Volume IV, Chapter 2). If immersion is not possible, spray, brush, or wipe the interior and exterior of equipment with water-displacing corrosion preventive compound.

c. (AF) Totally immerse equipment in a 55-gallon drum of Water-Displacing Corrosion Preventive Compound, Ultra-Thin Film, MIL-C-81309 Type II, or Water-Displacing Lubricant and Corrosion Preventive Compound MIL-L-87177 Type I or II Grade B (Volume V, Chapter 2). If immersion is not possible, spray, brush, or wipe the interior and exterior of equipment with water-displacing corrosion preventive compound.

10-4.4. REMOVING PURPLE K POWDER (O-D-1407, POTASSIUM BICARBONATE) OR OTHER DRY CHEMICAL FIRE EXTINGUISHING AGENTS. To remove powder, proceed as follows:

a. If the surplus can be removed by vacuum cleaning, do so; otherwise, use the following rinse procedure.

b. Use a soft bristle brush and air pressure not greater than 10 psi to dislodge contaminants between close-fitting components.

c. Vacuum clean again.

Compound, Aircraft Cleaning 4
MIL-PRF-85570

d. (N) (A) Remove the residual film of dry powder adhering to the surface by wiping, brushing, or spraying with a solution of one part aircraft cleaning compound, MIL-PRF-85570 Type II (Volume IV, Chapter 2), in nine parts of water.

e. (AF) Remove the residual film of dry powder adhering to the surface by wiping, brushing, or spraying with a solution of one part of MIL-PRF-87937 Type IV or MIL-PRF-85570 Type II aircraft cleaning compound (Volume V, Chapter 2), in nine parts of water.

f. Rinse thoroughly with fresh water.

g. Dry with cloths or paper towels, or blow dry with air pressure not greater than 10 psi.

Compound, Corrosion Preventative 3
Water-Displacing
MIL-C-81309

h. (N)(A) Liberally apply water displacing CPC, MIL-C-81309 Type II (Volume IV, Chapter 2), to affected areas.

i. (AF) Apply a liberal amount of MIL-C-81309 Type II, or MIL-L-87177 Type I or II Grade B, water displacing CPC (Volume V, Chapter 2) to the affected area.

j. Enter a notation defining areas and components that have been exposed to residue from burned materials and fire extinguishing agent in the appropriate aircraft, missile, or equipment forms, with a requirement for a special inspection for corrosion prone areas or components at a specified future time to determine if any corrosion has occurred.

10-4.5. REMOVING MIL-F-24385, AQUEOUS FILM FORMING FOAM (AFFF). To remove residues of salt water solutions of AFFF fire extinguishing agent, proceed with steps a. through j. below. To remove residues of fresh water solutions of AFFF, use the same procedure but omit steps b. through d.

NOTE

The following procedure applies to AFFF and salt water mixture normally used aboard ship. AFFF and fresh water mixtures usually do not present a corrosion problem. However, cleanup of residues after a fire is required for corrosion prevention.

a. Flush all affected areas with fresh, clean water while draining. Whenever possible, units or components which have been removed should be immersed in fresh water and then flushed thoroughly with fresh, clean water. Drain away the water.

b. Mix a solution of one pint of AFFF fire extinguishing agent (MIL-F-24385) in 10 gallons of fresh water.

c. Apply solution to affected areas using one of the following methods:

(1) Use a foam generator, solvent wash gun, backpack, or other type of spray equipment.

(2) Use aircraft washing kit, sponges, or low lint cloths, or pour solution directly over affected areas if foaming generator is not available.

d. Keep affected areas wet with AFFF solution for 3 to 5 minutes.

Compound, Aircraft Cleaning 4
MIL-PRF-85570

e. (N) (A) Clean surfaces with a solution of one part aircraft cleaning compound, MIL-PRF-85570 Type II (Volume IV, Chapter 2), in nine parts of water. Scrub affected areas and rinse with clean, fresh water. Drain away excess water.

f. (AF) Clean surfaces with a solution of one part MIL-PRF-87937 Type IV, or MIL-PRF-85570 Type II, aircraft cleaning compound (Volume V, Chapter 2), in nine parts of water. Scrub affected areas and rinse with clean, fresh water. Drain away excess water.

g. Dry with cloths, paper towels, or air pressure not greater than 10 psi.

Compound, Corrosion Preventative 3
Water-Displacing
MIL-C-81309

h. (N) (A) Apply water displacing CPC, MIL-C-81309 Type III (Volume IV, Chapter 2) to all avionic components and electrical connectors. Liberally apply water displacing CPC, MIL-C-81309 Type II (Volume IV, Chapter 2), to all other areas that cannot be properly drained or recesses which are difficult to reach.

i. (AF) Apply MIL-C-81309 Type III or MIL-L-87177 Type I or II Grade B (Volume V, Chapter 2), water displacing CPC to all avionic components and electrical connectors. Apply a liberal amount of MIL-C-81309 Type II or MIL-L-87177 Type I or II Grade B water displacing CPC to all other areas that cannot be properly drained or contain recesses which are difficult to reach.

j. Enter a notation defining areas and components that have been exposed to residue from burned materials and fire extinguishing agent in the appropriate aircraft, missile, or equipment forms, with a requirement for a special inspection for corrosion prone areas or components at a specified future time to determine if any corrosion has occurred.

10-4.6. <u>REMOVAL OF CARBON DIOXIDE (CO2), HFC-125, OR HALON FIRE EXTINGUISHING AAGENTS</u>.

NOTE

Carbon dioxide, HFC-125, or Halon fire extinguishing agents will not leave residues. However, smoke, smudges, or other grime from a fire is corrosive and shall be removed from affected items that are to be retained for future use.

10-4.6.1. CO_2, HFC-125 (pentafluoroethane), Halon 1211 (MIL-DTL-38741, bromochloro-difluoromethane) and Halon 1301 (ASTM D 5632, bromotrifluoromethane) evaporate rapidly. Therefore, no cleanup is required unless moisture or high temperature was present at the area of application. However, ventilation should always be provided to remove the vapors. If moisture or high temperature was present, use the following clean-up procedures.

a. After fire has been extinguished, purge area and surface with clean, dry air (dust free, low moisture content, compressed air).

Compound, Aircraft Cleaning 4
MIL-PRF-85570

b. (N) (A) Clean surfaces with a solution of one part aircraft cleaning compound, MIL-PRF-85570 Type II (Volume IV, Chapter 2), in nine parts of water. Scrub affected areas and rinse with clean, fresh water. Drain away excess water.

c. (AF) Clean surfaces with a solution of one part MIL-PRF-87937 Type IV or MIL-PRF-85570 Type II (Volume V, Chapter 2), aircraft cleaning compound in nine parts of water. Scrub affected areas and rinse with clean, fresh water. Drain away excess water.

d. Dry with cloths, paper towels, or air pressure not greater than 10 psi.

Compound, Corrosion Preventative 3
Water-Displacing
MIL-C-81309

e. (N) (A) Apply water displacing CPC, MIL-C-81309 Type III (Volume IV, Chapter 2), to all avionic components and electrical connectors. Liberally apply water displacing CPC, MIL-C-81309 Type II, to all other areas that cannot be properly drained or recesses which are difficult to reach.

f. (AF) Apply MIL-C-81309 Type III, or MIL-L-87177 Type I or II Grade B water displacing CPC (Volume V, Chapter 2), to all avionic components and electrical connectors. Apply a liberal amount of MIL-C-81309 Type II, or MIL-L-87177 Type I or II Grade B, water displacing CPC to all other areas that cannot be properly drained or contain recesses which are difficult to reach.

g. Enter a notation defining areas and components that have been exposed to residue from burned materials and fire extinguishing agent in the appropriate aircraft, missile, or equipment forms, with a requirement for a special inspection for corrosion prone areas or components at a specified future time to determine if any corrosion has occurred.

10-4.7. <u>REMOVAL OF PROTEIN FOAM AND SODA ACID</u>. The residues left from the use of these materials can be very corrosive to aircraft and equipment. Remove residues as follows:

a. Thoroughly flush the affected area with fresh water. Ensure that the rinse water is completely flushed from the aircraft or equipment.

Compound, Aircraft Cleaning 4
MIL-PRF-85570

b. (N) (A) Clean surfaces with a solution of one part aircraft cleaning compound, MIL-PRF-85570 Type II (Volume IV, Chapter 2), in nine parts of water. Scrub affected areas and rinse with clean, fresh water. Drain away excess water.

c. (AF) Clean surfaces with a solution of one part of MIL-PRF-87937 Type IV, or MIL-PRF-85570 Type II (Volume V, Chapter 2), aircraft cleaning compound in nine parts of water. Scrub affected areas and rinse with clean, fresh water. Drain away excess water.

d. Dry with cloths, paper towels, or air pressure not greater than 10 psi.

Compound, Corrosion Preventative 3
Water-Displacing
MIL-C-81309

e. (N) (A) Apply water displacing CPC, MIL-C-81309 Type III (Volume IV, Chapter 2), to all avionic components and electrical connectors. Liberally apply water displacing CPC, MIL-C-81309 Type II, to all other areas that cannot be properly drained or recesses which are difficult to reach.

f. (AF) Apply MIL-C-81309 Type III or MIL-L-87177 Type I or II Grade B (Volume V, Chapter 2) water displacing CPC to all avionic components and electrical connectors. Apply a liberal amount of MIL-C-81309 Type II or MIL-L-87177 Type I or II Grade B water displacing CPC to all other areas that cannot be properly drained or contain recesses which are difficult to reach.

g. Enter a notation defining areas and components that have been exposed to residue from burned materials and fire extinguishing agent in the appropriate aircraft, missile, or equipment forms, with a requirement for a special inspection for corrosion prone areas or components at a specified future time to determine if any corrosion has occurred.

10-4.8. TREATMENT AFTER EXPOSURE TO VOLCANIC ASH. The primary concern in removing volcanic ash is the extreme abrasiveness of the ash. It is not a significantly corrosive material. Aircraft which have been exposed to volcanic ash should be cleaned using the following procedures after exposure and before the next aircraft operation or flight:

a. All static ports, fuel vents, engine inlets, air conditioning inlets, or openings shall be vacuumed to remove as much ash as possible and then suitably covered to preclude additional ash entry. Special emphasis should be placed on ducting supplying cooling air to avionics equipment.

b. After covering all openings where ash may enter, the exterior of the airframe or equipment should have ash removed using vacuum, low pressure air, or by lightly dusting with clean rags. Avoid rubbing since this may damage surfaces due to the abrasiveness of the ash.

c. Clean and lubricate entire aircraft or component in accordance with Volume II (Navy and Army) or TO 1-1-691 (Air Force.)

10-5. EMERGENCY DRYING AND PRESERVATION.

10-5.1. GENERAL. Drying and preservation are essential to eliminate any traces of water and control corrosion until equipment is received at next higher level of maintenance.

10-5.2. DRYING AND PRESERVATION PROCEDURES. The following drying and preservation procedures shall be used in accordance with availability of special equipment.

10-5.2.1. Vented Drying Oven (Forced Air).

WARNING

Compressed air used for drying can create airborne particles that may enter the eyes. Pressure shall not exceed 10 psi. Eye protection is required.

a. Blow off excess liquid with not more than 10 psi dry air pressure or dry nitrogen. Deflect jet of air off interior, back, and sides of enclosure to diffuse.

b. Place equipment in oven and dry at approximately 130°F (54°C) for 1 to 2 hours.

Compound, Corrosion Preventative 3
Water-Displacing
MIL-C-81309

c. (N)(A) For all avionic components and electrical connectors, apply by spraying Water-Displacing Corrosion Preventive Compound, Ultra-Thin Film, Avionics Grade, MIL-C-81309 Type III (Volume IV, Chapter 2).

d. (AF) For all avionic components and electrical connectors, apply by spraying Water-Displacing Corrosion Preventive Compound, Ultra-Thin Film, Avionics Grade, MIL-C-81309 Type III, or Water Displacing Lubricant and Corrosion Preventive Compound, MIL-L-87177 Type I or II Grade B (Volume V, Chapter 2).

10-5.2.2. Vacuum Oven Drying.

WARNING

Compressed air used for drying can create airborne particles that may enter the eyes. Pressure shall not exceed 10 psi. Eye protection is required.

a. Blow off excess liquid with not more than 10 psi dry air pressure or dry nitrogen. Deflect jet of air off interior, back, and sides of enclosure to diffuse.

b. Place equipment in oven and dry at approximately 130°F (54°C) and a minimum of 25 in. Hg for 1 to 2 hours.

Compound, Corrosion Preventative 3
Water-Displacing
MIL-C-81309

c. (N)(A) After completion of drying step for all avionic components, apply Water-Displacing Corrosion Preventive Compound, Ultra-Thin Film, Avionics Grade, MIL-C-81309 Type III (Volume IV, Chapter 2).

d. (AF) After completion of drying step for all avionic components, apply Water-Displacing Corrosion Preventive Compound, Ultra-Thin Film, Avionics Grade, MIL-C-81309 Type III, or Water Displacing Lubricant and Corrosion Preventive Compound, MIL-L-87177 Type I or II Grade B (Volume V, Chapter 2).

10-5.2.3. Vented Drying Oven (Bulb Type).

WARNING

Compressed air used for drying can create airborne particles that may enter the eyes. Pressure shall not exceed 10 psi. Eye protection is required.

a. Blow off excess liquid with not more than 10 psi dry air pressure or dry nitrogen. Deflect jet of air off interior, back, and sides of enclosure to diffuse.

b. Place equipment in oven and dry the equipment at approximately 130°F (54°C) for 4 to 6 hours.

Compound, Corrosion Preventative 3
Water-Displacing
MIL-C-81309

c. (N) (A) For all avionic components and electrical connectors, apply by spraying Water-Displacing Corrosion Preventive Compound, Ultra-Thin Film, Avionics Grade, MIL-C-81309 Type III (Volume IV, Chapter 2).

d. (AF) For all avionic components and electrical connectors, apply by spraying Water-Displacing Corrosion Preventive Compound, Ultra-Thin Film, Avionics Grade, MIL-C-81309 Type III, or Water Displacing Lubricant and Corrosion Preventive Compound, MIL-L-87177 Type I or II Grade B (Volume V, Chapter 2).

10-5.2.4. Hot Air Blower.

WARNING

Compressed air used for drying can create airborne particles that may enter the eyes. Pressure shall not exceed 10 psi. Eye protection is required.

a. Blow off excess liquid with not more than 10 psi dry air pressure or dry nitrogen. Deflect jet of air off interior, back, and sides of enclosure to diffuse.

b. Dry the equipment with a Hot Air Blower (Volume IV or V, Chapter 3).

Compound, Corrosion Preventative 3
Water-Displacing
MIL-C-81309

c. (N) (A) For all avionic components and electrical connectors, apply by spraying Water-Displacing Corrosion Preventive Compound, Ultra-Thin Film, Avionics Grade, MIL-C-81309 Type III (Volume IV, Chapter 2).

d. (AF) For all avionic components and electrical connectors, apply by spraying Water-Displacing Corrosion Preventive Compound, Ultra-Thin Film, Avionics Grade, MIL-C-81309 Type III, or Water Displacing Lubricant and Corrosion Preventive Compound, MIL-L-8717 Type I or II Grade B (Volume V, Chapter 2).

10-5.2.5. Heated Compartment.

WARNING

Compressed air used for drying can create airborne particles that may enter the eyes. Pressure shall not exceed 10 psi. Eye protection is required.

a. Blow off excess liquid with not more than 10 psi dry air pressure or dry nitrogen. Deflect jet of air off interior, back, and sides of enclosure to diffuse.

b. Dry the equipment in a heated compartment with proper air circulation at a temperature of 100°F (38°C) to 130°F (54°C) until dry.

Compound, Corrosion Preventative 3
Water-Displacing
MIL-C-81309

c. (N) (A) For all avionic components and electrical connectors, apply by spraying Water-Displacing Corrosion Preventive Compound, Ultra-Thin Film, Avionics Grade, MIL-C-81309 Type III (Volume IV, Chapter 2).

d. (AF) For all avionic components and electrical connectors, apply by spraying Water-Displacing Corrosion Preventive Compound, Ultra-Thin Film, Avionics Grade, MIL-C-81309 Type III, or Water Displacing Lubricant and Corrosion Preventive Compound, MIL-L-87177 Type I or II Grade B (Volume V, Chapter 2).

10-6. ORGANIZATIONAL/UNIT LEVEL EMERGENCY CLEANING PROCEDURES.

10-6.1. REMOVABLE AVIONIC EQUIPMENT. Inspect equipment for damaged seals, smoke, heat, and fire damage. Obtain maximum available engineering assistance to determine extent of damage. Most avionic equipment contains dissimilar metals and particular attention shall be given to dissimilar metal joints. If contaminated avionic equipment can be immediately inducted into the IMA for expeditious cleaning and repair, then drying and preservation steps are not necessary. However, if induction directly into the IMA for early cleaning and repair is not possible, then proceed with drying and preservation procedures as specified in paragraph 10-5.2. Equipment exposed to salt water, water immersion, and fire extinguishing agents shall be cleaned as follows:

WARNING

Ensure that all electrical power is disconnected from the aircraft and all systems in the aircraft are deactivated and disarmed. Disconnect all batteries. Voltages used may cause severe shock or death on contact. Use caution and avoid contact with energized components.

a. Electrically ground the aircraft.

b. Turn off all electrical power and disarm aircraft, including ejection seat. Disconnect all batteries.

c. The emergency removal priority list shall be as contained in Volume II of this manual (Navy and Army) or TO 1-1-691 (Air Force). Inspect equipment to determine extent of damage. Remove contaminated equipment as soon as possible.

d. Remove all covers, modules, and components that are normally removed.

e. Tilt the equipment back and forth to allow accumulated water to drain off.

f. Examine the individual items thoroughly for evidence of salt water, fire extinguishing agents, smoke, or oil films.

g. Items that are contaminated shall be cleaned using the primary method (paragraph 10-4.2) whenever possible. Some specific information on fire fighting fluids and volcanic ash is found in section 10-4.

h. If the primary method cannot be followed, use one of the alternate methods specified in paragraph 10-4.3.

10-6.2. Removal and Cleaning of Identification/Modification Plates. The following procedures are applicable for cleaning identification and modification plates:

NOTE

If sealant (adhesive) is undamaged, do not remove identification plate. Only removable plates shall be removed.

a. As appropriate, remove plates.

b. Thoroughly clean plates and mounting areas as specified in paragraphs 10-4.2 or 10-4.3.

Sealing Compound 2
Corrosion Inhibitive
MIL-PRF-81733

c. After cleaning, allow plates and mounting areas to dry. Apply coat of Sealing Compound, MIL-PRF-81733 (Volume IV or V, Chapter 2), and reinstall identification plates.

10-6.3. HERMETICALLY SEALED AVIONIC EQUIPMENT. When removing hermetically sealed units, pay particular attention to cable clamp areas, bindings securing wire harnesses, and cable connectors. These are areas where salt and fire extinguishing agents can become entrapped.

a. Immerse the unit in a container of fresh water to test for air-tight integrity of the seal. The presence of air bubbles will positively indicate a faulty seal. Units showing evidence of damage to seals shall be forwarded to the next higher level of maintenance for disposition.

b. Clean as specified in paragraph 10-4.2 or 10-4.3, as applicable.

c. Dry and preserve as specified in paragraph 10-5.2.

d. There are exceptions to this cleaning procedure, such as hermetically sealed pressurized units that would not be contaminated unless the unit had lost its internal pressure. These units shall be forwarded to the next higher level of maintenance for disposition.

10-6.4. ELECTRIC MOTORS AND GENERATORS. Cleaning is an essential preliminary procedure in salvaging electric motors, generators, inverters, miniature synchro transmitters, and receivers.

a. Clean using the primary method, paragraph 10-4.2.

b. Dry and preserve as specified in paragraph 10-5.2.

c. Inspect equipment to determine whether it is to be used or removed and forwarded to the IMA. Carefully check the equipment with sealed bearings. These bearings are not necessarily waterproof and may require replacement by the designated repair facility.

Solvent, Degreasing 7
MIL-PRF-680

d. Equipment shall be deemed serviceable after emergency preservation by the Organizational/Unit Maintenance Activity. Remove the water-displacing corrosion preventive compound with Degreasing Solvent, MIL-PRF-680 Type III (Volume IV or V, Chapter 2).

10-6.5. COCKPIT AREA COMPONENTS. The cockpit area contains various types of components. Nonremovable components and equipment shall be cleaned and preserved as specified in paragraphs 10-6.9 through 10-6.14. Removable components shall be cleaned and preserved as follows:

a. Remove all control boxes, equipment, relay boxes, and indicators.

b. Examine all equipment and components for evidence of salt water, fire extinguishing agents, smoke, or oil films.

c. Items that are contaminated shall be cleaned using the primary method, paragraph 10-4.2. Some specific information on fire fighting fluids and volcanic ash is found in section 10-4.

d. Dry and preserve as specified in paragraph 10-5.2.

e. Special attention shall be given to cockpit electrical connectors. Clean and preserve connectors as specified in paragraph 10-6.13.

f. Cockpit circuit breakers, toggle, rotary, interlock, and pushbutton switches shall be cleaned/preserved as specified in paragraph 10-6.6.

10-6.6. SWITCHES AND CIRCUIT BREAKERS. Switches such as toggle, rotary, interlock, pushbutton, cam operated, and circuit breakers vary in shape and size. Most switches are enclosed in a sealed case. Cleaning of internal parts is not possible. Exposed areas such as terminal posts, toggles, pushbuttons, or rotary switches shall be cleaned and preserved as follows:

a. Remove contamination with fine spray of fresh water. The use of Acid Brush, A-A-289 Style opt. (Volume IV or V, Chapter 3), will help dislodge contaminants.

b. Rinse with a fine spray of fresh water.

WARNING

Compressed air used for drying can create airborne particles that may enter the eyes. Pressure shall not exceed 10 psi. Eye protection is required.

c. Blow excess water from the switches and circuit breakers with not more than 10 psi dry air pressure. Wipe with Cleaning Cloth, CCC-C-46 Class 7 (Volume IV or V, Chapter 2), to reduce drying time.

Solvent, Degreasing 7
MIL-PRF-680

d. To remove stubborn oil and grease stains, use Degreasing Solvent, MIL-PRF-680 Type III (Volume IV or V, Chapter 2), applied with Acid Brush, A-A-289 Style opt. (Volume IV or V, Chapter 3).

e. Dry as specified paragraph 10-5.2, except do not apply water-displacing corrosion preventive compounds.

10-6.7. ANTENNAS. For maximum efficiency, antennas and their insulators must be free of contaminants. For more efficient cleaning, it may be necessary to remove the antenna according to instructions in applicable service directives. Inplace cleaning and preservation may be accomplished as follows:

a. Check antenna insulators for damage or cracks before cleaning. Replace if found defective.

Compound, Aircraft Cleaning 4
MIL-PRF-85570

b. (N) (A) Brush or spray a mixture of one part Aircraft Cleaning Compound, MIL-PRF-85570 Type II (Volume IV, Chapter 2), to nine parts water on antenna surfaces. Scrub the area with Cleaning Cloth, CCC-C-46 Class 7 (Volume IV, Chapter 2).

c. (AF) Brush or spray a mixture of one part Aircraft Cleaning Compound, MIL-PRF-87937 Type II or IV (Volume V, Chapter 2), to nine parts water on antenna surfaces. Scrub the area with Cleaning Cloth, CCC-C-46 Class 7 (Volume V, Chapter 2).

d. Wipe antenna surfaces with Cleaning Cloth, CCC-C-46 Class 7 (Volume IV or V, Chapter 2).

e. Rinse with clean, fresh water. Wipe excess water with Cleaning Cloth, CCC-C-46 Class 7 (Volume IV or V, Chapter 2).

f. Let antenna air-dry.

g. Preserve and reseal antenna to airframe as specified in Chapter 6.

10-6.8. MOUNTING RACKS AND SHOCK MOUNTS. Mounting racks and shock mounts shall be cleaned and preserved as follows:

a. Remove the mounting racks, shock mounts, and associated hardware.

b. Clean as specified in paragraph 10-4.2.

c. Inspect for signs of damage. Replace accordingly.

d. Dry as specified in paragraph 10-5.2, except use MIL-C-81309 Type II water-displacing corrosion preventive compound.

e. (N) Tag the units to be shipped to the IMA for further disassembly, cleaning, preservation, repair, and operational check. Use Water/Crash/Fire Damage Form, NAVAIR 3750/1, and indicate the type of cleaning, drying, and preservation method used.

f. (AF) Tagging. All parts and components removed from the aircraft, missile, or equipment shall be “green”

tagged (DD Form 1577-3) for identification, description of the accident/incident experienced, listing of the contaminants and chemical materials to which they were exposed, and to indicate the type of CPC applied. CPC's shall be removed prior to reusing the equipment.

10-6.9. NONREMOVABLE AVIONIC EQUIPMENT. Those nonremovable avionic components exposed to salt water or fire extinguishing agents shall be cleaned as follows:

NOTE

The emergency cleaning, drying, and preservation of equipment bays and airframe structures shall be in accordance with Volume II of this manual (Navy and Army) or TO 1-1-1-691 (Air Force).

a. Electrically ground the aircraft.

WARNING

Ensure that all electrical power is disconnected from the aircraft and all systems in the aircraft are deactivated. Disconnect all batteries. Voltages used may cause severe shock or death on contact. Use caution and avoid contact with energized components.

b. Turn off all electrical power and disarm aircraft, including ejection seats. Disconnect and remove all batteries.

c. Refer to emergency priority list in Volume II of this manual (Army and Navy) or TO 1-1-691 (Air Force).

d. Open all equipment bay doors. Remove all access panels, equipment, and components that are normally removed.

e. Examine all nonremovable avionic equipment and components for evidence of salt water, extinguishing agents, smoke, or oil films.

f. Items that are contaminated shall be cleaned using the primary method in paragraph 10-4.2, whenever possible. Ensure that areas behind and under mounting structures/components are thoroughly cleaned. Further information on cleaning up fire fighting fluids is included in Section 10-4.

g. If the primary method cannot be followed, use one of the alternate methods specified in paragraph 10-4.3.

10-6.10. IN-PLACE CLEANING. If cleaning must be accomplished while the equipment is installed, the use of Pump, Backpack (Volume IV or V, Chapter 3), is recommended for flushing inaccessible areas.

10-6.11. DRYING AND PRESERVATION OF NONREMOVABLE AVIONIC EQUIPMENT. In most cases the only technique for drying installed, nonremovable avionic equipment is through the use of Hot Air Gun, Raychem HT-900 (Volume IV or V, Chapter 3), or air drying where specified.

WARNING

Compressed air used for drying can create airborne particles that may enter the eyes. Pressure shall not exceed 10 psi. Eye protection is required.

a. Blow off excess water with not more than 10 psi dry air pressure or dry nitrogen. Deflect jet of air off interior, back, and sides of enclosure to diffuse.

b. Dry the equipment with Hot Air Gun, Raychem HT-900 (Volume IV or V, Chapter 3).

c. After drying, preserve as specified in paragraph 10-5.2.4.

d. Wipe off excess with Cleaning Cloth, CCC-C-46 Class 7 (Volume IV or V, Chapter 2).

10-6.12. TERMINAL BOARDS, JUNCTION BOXES, RELAY BOXES, AND CIRCUIT BREAKER PANELS. Terminal boards, junction boxes, relay boxes, and circuit breaker panels not normally removed from the aircraft shall be cleaned according to the following procedures:

a. Remove covers and access panels.

b. Clean using the primary method in paragraph 10-4.2.

c. Dry the equipment with Hot Air Gun, Raychem HT-900 (Volume IV or V, Chapter 3).

d. Check the terminal boards and junction boxes for loose mountings, loose or broken connections, cracks, and breaks, before returning equipment to service.

10-6.13. ELECTRICAL CONNECTORS AND RECEPTACLES. Electrical connectors and receptacles require special procedures for cleaning and preservation. Connectors and receptacles that cannot be opened and separated for cleaning shall be cleaned and inspected in place under the direction of the Maintenance Officer. Clean and preserve electrical connectors and receptacles as follows:

a. Disconnect and disassemble connectors and receptacles to release entrapped contaminants.

b. Rinse with fresh water.

WARNING

Compressed air used for drying can create airborne particles that may enter the eyes. Pressure shall not exceed 10 psi. Eye protection is required.

c. Blow excess water from the connectors or receptacles with not more than 10 psi low-pressure clean, dry air/dry nitrogen. Wipe with Cleaning Cloth, CCC-C-46 Class 7 (Volume IV or V, Chapter 2), to reduce drying time.

Solvent, Degreasing 7
MIL-PRF-680

d. To remove stubborn oil and grease stains, use Degreasing Solvent, MIL-PRF-680 Type III (Volume IV or V, Chapter 2), applied with Acid Brush, A-A-289 style opt. (Volume IV or V, Chapter 3), or Brush, Typewriter, A-A-3077 Type T (Volume IV or V, Chapter 3), followed by wiping with Cleaning Cloth, CCC-C-46 Class 7 (Volume IV or V, Chapter 2).

e. Dry the equipment with a Hot Air Gun, Raychem HT-900 (Volume IV or V, Chapter 3). Connectors and receptacles may also be allowed to air dry.

Compound, Corrosion Preventative 3
Water-Displacing
MIL-C-81309

f. (N) (A) Apply a light film of Water-Displacing Corrosion Preventive Compound, Ultra-Thin Film, Avionics Grade, MIL-C-81309 Type III (Volume IV, Chapter 2).

g. (AF) Apply a light film of Water-Displacing Corrosion Preventive Compound, Ultra-Thin Film, Avionics Grade, MIL-C-81309 Type III, or Water Displacing Lubricant and Corrosion Preventive Compound, MIL-L-87177 Type I or II Grade B (Volume V, Chapter 2).

h. (N) (A) Prior to connecting threaded sections of connectors plugs and receptacles, lubricate threaded area with Water-Displacing Corrosion Preventive Compound, Ultra-Thin Film Avionics Grade, MIL-C-81309 Type III (Volume IV, Chapter 2).

i. (AF) Prior to connecting threaded sections of connectors plugs and receptacles, lubricate threaded area with Water-Displacing Corrosion Preventive Compound, Ultra-Thin Film Avionics Grade, MIL-C-81309 Type III, or Water Displacing Lubricant and Corrosion Preventive Compound, MIL-L-87177 Type I or II Grade B (Volume V, Chapter 2).

10-6.14. WIRE HARNESSES AND CABLES. Electrical wire harnesses and cables exposed to salt water or fire extinguishing agents shall be cleaned and preserved according to the following procedures.

a. Remove the strap hangers.

WARNING

Compressed air used for drying can create airborne particles that may enter the eyes. Pressure shall not exceed 10 psi. Eye protection is required.

b. If possible, separate wiring. Rinse with fresh water to wash away entrapped contaminants. Blow excess water from wiring with not more than 10 psi clean dry air or dry nitrogen.

c. Open and separate connectors. Raise and position connector to facilitate thorough rinsing with fresh water and minimize the forcing of contaminants into connectors. If the cable harness is encased, flush exterior with fresh water to dislodge accumulated salt deposits. Blow excess water from the cable with not more than 10 psi clean dry air or dry nitrogen.

d. Wipe with Cleaning Cloth, CCC-C-46 Class 7 (Volume IV or V, Chapter 2), to reduce drying time.

e. Cables and harnesses readily removable from the aircraft shall be dried as specified in paragraph 10-5.2.

f. Cables and harnesses not readily removable from the aircraft shall be dried with Hot Air Gun, Raychem HT-900 (Volume IV or V, Chapter 3).

Compound, Corrosion Preventative 3
Water-Displacing
MIL-C-81309

g. (N) (A) Apply Water-Displacing Corrosion Preventive Compound, Ultra-Thin Film, Avionics Grade, MIL-C- 81309 Type III (Volume IV, Chapter 2), to metal components.

h. (AF) Apply Water-Displacing Corrosion Preventive Compound, Ultra-Thin Film, Avionics Grade, MIL-C-81309 Type III, or Water Displacing Lubricant and Corrosion Preventive Compound, MIL-L-87177 Type I or II Grade B (Volume V, Chapter 2), to metal components.

10-7. INTERMEDIATE LEVEL EMERGENCY CLEANING PROCEDURES.

10-7.1. GENERAL. The initial emergency salvage steps taken at the Organization/Unit level are only designed to stop further corrosion damage, particularly to avionic equipment exposed to salt water, water immersion, or fire extinguishing agents. The ability to immediately induct avionic equipment into the IMA for cleaning, drying, preservation, repair, and operational check is limited. In many cases, the equipment may not be accessible for some time depending upon an Accident Investigation Board. It is essential that the IMA be ready to provide services after major multi-aircraft incidents.

10-7.2. EMERGENCY RECLAMATION TEAM. The Intermediate Maintenance Activity Emergency Reclamation Team Officer will assist the Maintenance Control Officer in establishing an initial screening of avionic equipment. Both officers will determine the condition of each piece of equipment and whether the Intermediate Maintenance Activity has the capability to execute further reclamation. Repairable equipment damaged beyond the capability of local repair shall be cleaned, preserved, packaged and forwarded to the appropriate maintenance repair facility for screening and repair in accordance with applicable service directives.

10-7.2.1. (N) Tagging. Units to be shipped to the appropriate maintenance repair facility for further disassembly, cleaning, preservation, repair, and operational check shall be tagged (Water/Crash/Fire Damage Form, NAVAIR 3750/1 or Water/Crash/Fire Damage Form label NAVAIR 4035/13 (Volume IV, Chapter 2)). The tags shall indicate the type of cleaning and preservation, in accordance with Volume II of this manual. Post tags on outside of shipping container of damaged part.

10-7.2.2. (AF) Tagging. All parts and components removed from the aircraft, missile, or equipment shall be “green” tagged (DD Form 1577-3) for identification, description of the accident/incident experienced, listing of the contaminants and chemical materials to which they were exposed, and to indicate the type of CPC applied. CPC’s shall be removed prior to reusing the equipment.

10-7.3. INITIAL SCREENING PROCEDURE. Avionic equipment that is damaged beyond local repair capability must be inspected to see if it was adequately cleaned and preserved. Equipment shall be cleaned and preserved, as appropriate, prior to packaging and shipment to the next level repair activity. Each piece of avionic equipment will be screened to determine the following:

a. Extent of damage.

b. Local repair capability.

c. Cleaning method.

d. Drying method.

e. Preservation method.

10-7.4. CLEANING PRIORITY. After initial screening, cleaning priority will be established by the IMA Emergency Reclamation Team Officer.

10-7.5. DISASSEMBLY INSPECTION PROCEDURE. The extent of damage by smoke, heat, or flame must be determined. Most avionic equipment contains dissimilar

metals and particular attention shall be given to dissimilar metal joints. Equipment exposed to salt water, water immersion, and fire extinguishing agents shall be inspected as follows:

Solvent, Degreasing 7
MIL-PRF-680

a. Remove Corrosion Preventive Compounds, MIL-C-81309, MIL-DTL-85054, MIL-L-87177, and MIL-PRF-16173 with Degreasing Solvent, MIL-PRF-680 Type III (Volume IV or V, Chapter 2), to facilitate inspection.

b. Remove all covers, access panels, modules, and normally removed components.

c. Examine the individual items thoroughly for evidence of salt water, fire extinguishing agents, smoke, oil films, heat, and fire damage.

d. Examine the individual items for evidence of corrosion.

e. Examine encapsulated and conformal coated laminated circuit boards for damage caused by salt water, fire extinguishing agents, and cleaning solvents. Pay particular attention to conformal coatings and circuit board laminates that are discolored, softened, or deformed.

f. Examine electrical cables, wires, and harnesses for signs of damage and deterioration from cleaning solvents. Pay particular attention to any signs of softened or cracked wire coating.

g. Disassemble and inspect electrical connectors and receptacles for damage and signs of corrosion. Pay particular attention to seals and gaskets.

h. Examine hermetically scaled components for damage and signs of deterioration from cleaning solvents. Pay particular attention to hermetically sealed pressurized equipment. Broken sealed units shall be forwarded to next higher level of maintenance if considered beyond local repair capability.

i. Examine electric motors, generators, inverters, miniature synchro transmitters, and receivers for damage. Pay particular attention to lubricated fittings and sealed bearings.

j. Examine control boxes for damage and signs of deterioration from cleaning solvents. Pay particular attention to faceplates, seals, and rubber boots around toggle switches and knobs.

k. Examine shock mounts, mounting racks, cases, chassis, and cover plates for buckling, disfiguration, and fire damage. Check painted surfaces for cracks or nicks. Pay particular attention to rubber shock mounts.

l. Disassemble and inspect all components for smoke and heat damage.

10-7.5.1. Undamaged Items. Items that show no signs of damage or corrosion shall be functionally checked in accordance with the applicable service directives. Equipment shall be put back into service in accordance with established procedures.

10-7.5.2. Damaged Items. Those items that show damage shall be repaired as specified by the applicable service directives.

10-7.6. EMERGENCY CLEANING AND PRESERVATION PROCEDURES. The cleaning and preservation procedures shall be as follows:

a. Equipment exposed to salt water, water immersion, or fire extinguishing agents and cleaned at the Organizational/Unit Maintenance Activity, shall be inspected as specified in paragraph 10-7.5. General corrosion removal and preservation shall be as specified in Chapters 4 and 9.

b. Equipment exposed to salt water, water immersion, or fire extinguishing agents and not cleaned at the Organizational/Unit Maintenance Activity, shall be cleaned as specified in paragraph 10-4.

(1) Where possible, use the primary cleaning method outlined in paragraph 10-4.2.

(2) For equipment to be put back into service, dry as specified in paragraph 10-5.2. Preserve as specified in Chapter 5.

(3) For equipment to be sent to depot for processing, dry and preserve as specified in paragraph 10-5.2.

THIS PAGE LEFT INTENTIONALLY BLANK