NAVAIR 01-1A-34
T.O. 00-25-252
T.C. 9-238

1 September 2009

CURRENT SUPPLEMENTS
00-25-252D

TECHNICAL MANUAL

INTERMEDIATE AND DEPOT LEVEL MAINTENANCE INSTRUCTIONS

AERONAUTICAL EQUIPMENT WELDING

This manual supersedes NAVAIR 01-1A-34 dated 1 April 1998 with Change 3 dated 30 September 2008

DISTRIBUTION STATEMENT A. Approved for public release, distribution is unlimited

Basic and all changes and supplements have been merged to make this a complete publication.

Published by Direction of the Commander, Naval Air Systems Command

0801LP1095248

NUMERICAL INDEX OF EFFECTIVE WORK PACKAGES/PAGES

List of Current Changes

Original 0 ..... 1 September 2009

Only those pages assigned to the manual are listed in this index. If changed pages are issued, insert the changed pages and dispose of superseded pages, including classified data, in accordance with applicable regulations. The portion of text affected by the change is indicated by change bars or the change symbol “R” in the outer margin of each column of text. Changes to illustrations are indicated by pointing hands, change bars, or shaded areas as applicable.

WP Number	Title
Title	
Page A	Numerical Index of Effective Work Packages/Pages
TPDR-1	List of Technical Publications Deficiency Reports (TPDR) Incorporated
001 00	Alphabetical Index
002 00	Safety
003 00	Welding Technology and Repair Introduction
003 01	Glossary
003 02	Welding Symbols and Codes
003 03	Material Characteristics
003 04	Base Metal Groups
003 05	Welding Electronics
003 06	Welding Machines
004 00	General Welding Equipment
004 01	Gas Tungstein ARC Welding Process
004 02	Shielded Metal ARC Welding and Equipment
004 03	Gas Metal ARC Welding and Equipment
004 04	Oxy-Acetylene Welding, Cutting and Brazing Equipment
004 05	Resistance Welding and Equipment
004 06	General Principles of Plasma ARC Cutting
005 00	General Welding Certification Requirements
005 01	Navy Specific Welding Certification requirements
005 02	Air Force - Qualification Certification Requirements
005 03	Army Specific Welding Certification Requirements
005 04	Weld Evaluation
006 00	Preweld Operations
006 01	Surface Preparation Welding
006 02	Welding Preparation
007 00	Welding - General Information
007 01	Welding Carbon and Alloy Steel (Group I)
007 02	Welding Stainless Steel Alloys (Group II)
007 03	Welding Nickel Alloys (Group III)
007 04	Welding Aluminum Alloys (Group IV)
007 05	Welding Magnesium Alloys (Group V)
007 06	Welding Titanium Alloys (Group VI)
007 07	Welding Cobalt Alloys (Group VII)
007 08	Welding Cast Iron
007 09	Welding Other Metals
008 00	Post Welding General Information
008 01	Post Welding Thermal Operations
008 02	Post Weld Contouring
009 00	Weld Visual Examination

TOTAL NUMBER OF PAGES IN THIS MANUAL IS 442 CONSISTING OF THE FOLLOWING:

WP/Page No.	Change No.	WP/Page No.	Change No.	WP/Page No.	Change No.
Title	0	001 00	0	003 00	0
A – B	0	1 – 11	0	1 – 4	0
C Blank	0	12 Blank	0	003 01	0
TPDR-1	0	002 00	0	1 – 24	0
TPDR-2 Blank	0	1 – 28	0	003 02	0

NUMERICAL INDEX OF EFFECTIVE WORK PACKAGES/PAGES (Cont)

WP/Page No.	Change No.
1 – 7	0
8 Blank	0
003 03	0
1 – 14	0
003 04	0
1 – 10	0
003 05	0
1 – 10	0
003 06	0
1 – 6	0
004 00	0
1 – 2	0
004 01	0
1 – 20	0
004 02	0
1 – 27	0
28 Blank	0
004 03	0
1 – 9	0
10 Blank	0
004 04	0
1 – 36	0
004 05	0
1 – 6	0
004 06	0
1 – 5	0
6 Blank	0
005 00	0
1 – 32	0
005 01	0
1 – 13	0
14 Blank	0
005 02	0
1 – 5	0
6 Blank	0
005 03	0
1 – 2	0
005 04	0
1 – 16	0
006 00	0
1 – 3	0
4 Blank	0
006 01	0
1 – 10	0
006 02	0
1 – 6	0
007 00	0
1 – 7	0
8 Blank	0
007 01	0
1 – 19	0
20 Blank	0
007 02	0
1 – 8	0
007 03	0
1 – 12	0
007 04	0
1 – 6	0
007 05	0
1 – 10	0
007 06	0
1 – 9	0
10 Blank	0
007 07	0
1 – 4	0
007 08	0
1 – 9	0
10 Blank	0
007 09	0
1 – 6	0
008 00	0
1 – 2	0
008 01	0
1 – 5	0
6 Blank	0
008 02	0
1 – 7	0
8 Blank	0
009 00	0
1 – 12	0

THIS PAGE INTENTIONALLY LEFT BLANK

LIST OF TECHNICAL PUBLICATIONS DEFICIENCY REPORTS (TPDR) INCORPORATED

INTERMEDIATE AND DEPOT

LEVEL MAINTENANCE INSTRUCTIONS

AERONAUTICAL EQUIPMENT WELDING

Identification No./ QA Sequence No.	Location
None	

THIS PAGE INTENTIONALLY LEFT BLANK

ALPHABETICAL INDEX

INTERMEDIATE AND DEPOT

LEVEL MAINTENANCE

AERONAUTICAL EQUIPMENT WELDING

Title	WP/SWP Number
Air Force - Qualification Certification Requirements	005 02
Air Force Unique Certification Requirements	005 02
Recertification Intervals	005 02
Fixtures and Coupons	005 02
Certifying Official	005 02
Examining Official	005 02
Observing Official	005 02
Welder's Supervisor	005 02
Welding Examination and Evaluation	005 02
Welding Examination Record	005 02
Alphabetical Index	001 00
Army Specific Welding Certification Requirements	005 03
Army Aviation Unique Certification Requirements	005 03
Base Metal Groups	003 04
General	003 04
Metal Groupings	003 04
Gas Metal ARC Welding (GMAW) Equipment	004 03
Commencing to Weld	004 03
Generator Polarity	004 03
Installing the Wire Electrode in Feed Type Machine	004 03
Installing the Wire Electrode in Spool Gun	004 03
Preventive Maintenance	004 03
Reclaiming Burned-Back Contact Tubes	004 03
Setting Machine	004 03
Setting the Shielding Gas Pressure	004 03
Gas Tungsten ARC Welding Process	004 01
Gas Tungsten ARC Welding (GTAW) Equipment	004 01
Gas Tungsten ARC Welding Power Sources	004 01
Gas Tungsten ARC Welding Principles	004 01
Gas Tungsten ARC Welding Station	004 01
Gas Tungsten ARC Welding Techniques	004 01
Methods of Starting the ARC	004 01
Selecting and Preparing a Tungsten Electrode	004 01
Selecting Correct Filler Metal for Use With GTAW	004 01
Selecting Correct GTAW Torch Nozzle	004 01
Selecting Correct Shielding Gas Flow Rate for GTAW	004 01
Selecting Proper Shielding for GTAW	004 01
Shutting Down the GTAW Station	004 01
General Principles of Plasma ARC Cutting	004 06
Cutting Operations	004 06

Title	WP/SWP Number
Plasma ARC Cutting (PAC)	004 06
General	004 06
Safety Cautions	004 06
Electric Shock Prevention	004 06
Eye Protection	004 06
Fire Prevention	004 06
Grounding	004 06
Noise Protection	004 06
Skin Protection	004 06
Toxic Fume Prevention	004 06
General Welding Certification Requirements	005 00
Certification Materials and Procedures	005 00
GMAW and SMAW	005 00
GTAW	005 00
Sheet	005 00
Tubes	005 00
Welding Fixtures	005 00
Definitions	005 00
Detailed Brazing Certification Requirements	005 00
Detailed Weld Certification Requirements	005 00
Welding Base Metals	005 00
Welding Procedures	005 00
General	005 00
General Certification Requirements for Military and Civilian Welders at the Intermediate Level	005 00
Certification Procedures	005 00
Failure to Meet Certification Requirements	005 00
Recertification Procedure	005 00
Welder Certification Procedures not Contained in this Section	005 00
Machine Welding Certification Requirements	005 00
Certification Procedure for Electron Beam Welding Machine Operators	005 00
Certification Procedure for Laser Beam Welding Machine Operators	005 00
Certification Procedure for Resistance Welding Machine Operators	005 00
Responsibilities	005 00
Scope	005 00
Visual Acuity Requirements	005 00
Welding Position Requirements	005 00
General Welding Equipment	004 00
Background	004 00
Welding Processes	004 00
Other Welding Processes	004 00
Glossary	003 01
Glossary	003 01
Welding Terms and Definitions	003 01
Material Characteristics	003 03
Classification of Aluminum Alloys	003 03
Classification of Ferrous (Iron) Alloys	003 03
Alloy Steels	003 03
Carbon Steels	003 03
Classification of Magnesium Alloys	003 03

Title	WP/SWP Number
Basic Classification	003 03
Temper Designation of Magnesium Alloys	003 03
Generation of Heat in Welding	003 03
Hardness Testing	003 03
Methods of Hardness Testing	003 03
Procedure for Measuring Hardness	003 03
Procedure of Hardness Testing	003 03
Relationship Between Hardness and Tensile Strength	003 03
Heat Treatment of Steel	003 03
Properties of a Metal	003 03
Navy Specific Welding Certification Requirements	005 01
Certification Procedures	005 01
General	005 01
Intermediate and Organization Level Welding Recertification Requirements	005 01
‘Mail-in’ Recertification Procedure	005 01
Naval Air Unique Certification Requirements	005 01
Proficiency Documentation	005 01
Requirements	005 01
Responsibilities	005 01
Weld School Recertification Procedure	005 01
Oxy-Acetylene Welding, Cutting and Brazing Equipment	004 04
Braze Weld Techniques	004 04
Backhand Welding	004 04
Fillet Welding	004 04
Forehand Welding	004 04
Multilayer Welding	004 04
Brazing and Cutting Metals	004 04
Cutting Steel and Cast Iron	004 04
Cutting with Oxyacetylene Flame	004 04
General	004 04
Scarfing, Gouging and Hogging	004 04
Silver Brazing	004 04
Flame Adjustment and Flame Types	004 04
Lighting the Torch	004 04
Flat Position Welding	004 04
Butt Welds	004 04
Horizontal Position Welding	004 04
Overhead Position Welding	004 04
Oxyacetylene Cutting Equipment	004 04
Operation of Cutting Equipment	004 04
Oxyacetylene Cutting Torch and Other Equipment	004 04
Oxyacetylene Welding, Cutting, and Brazing Process and Techniques	004 04
General Welding Procedure	004 04
Working Pressure for Welding Operations	004 04
Oxyacetylene Welding Fluxes	004 04
Oxyacetylene Welding Rods	004 04
Oxyacetylene Welding Torch	004 04
Hose	004 04
Types of Torches	004 04

Title	WP/SWP Number
Welding Tips and Mixers	004 04
Portable Welding Equipment	004 04
Acetylene Cylinders	004 04
Oxygen and Acetylene Regulators	004 04
Oxygen and its Production	004 04
Setting up the Welding Equipment	004 04
Adjustment of Working Pressure	004 04
Clogged Tubes and Tips	004 04
Cylinders	004 04
Damaged Inlet Connection Threads	004 04
Leaking Valves	004 04
Leaks in the Mixing Heads	004 04
Pressure Regulators	004 04
Regulator Malfunctions and Corrections	004 04
Scored or Out-of-Round Tip Orifices	004 04
Shutting Down Welding Equipment	004 04
Torch	004 04
Torch Malfunctions and Corrections	004 04
Stationary Welding Equipment	004 04
Types of Flames	004 04
Neutral Flame	004 04
Oxidizing Flame	004 04
Reducing or Carburizing Flame	004 04
Vertical Position Welding	004 04
Welding and Cutting Equipment	004 04
Oxyacetylene Welding Equipment	004 04
Post Weld Contouring	008 02
Purpose	008 02
As-Welded	008 02
Fatigue Consideration	008 02
Fillet Welds	008 02
Grinding and Dressing	008 02
Groove Welds	008 02
Start and Stops	008 02
Thinning of Base Metals	008 02
Post Welding General Information	008 00
Post Weld Contouring	008 00
Post Weld Thermal Treatments	008 00
Purpose	008 00
Preweld Operations	006 00
Additional Methods of Cleaning	006 00
Common Methods for Preweld Cleaning	006 00
Joint preparation	006 00
Purpose	006 00
Resistance Welding and Equipment	004 05
Resistance Welding Equipment	004 05
Projection Welding	004 05
Seam Welding	004 05
Spot Welding	004 05

Title	WP/SWP Number
Upset and Flash Welding	004 05
Welding Operations	004 05
Welding Specifications	004 05
Safety	002 00
Fire Hazards	002 00
Fire Protection	002 00
Basic Precautions Outlined Herein Should Apply to the Following Operations	002 00
Fire Watcher Assignment	002 00
Fire Watcher Responsibilities	002 00
Safety For On-Support Equipment Welding, Cutting, and Brazing	002 00
General Safety Precautions	002 00
Hazardous Materials	002 00
Aeronautical and Support Equipment	002 00
Compressed Air	002 00
Flammables	002 00
Heat and Cold	002 00
Maintenance Procedures	002 00
Thoriated Tungsten Welding Electrodes	002 00
Thorium	002 00
Wet/Dry Grinding Thoriated Tungsten Welding Electrodes	002 00
Health Protection and Ventilation	002 00
Concentration of Toxic Substances	002 00
Ventilation for Welding and Brazing	002 00
Hot Work	002 00
Acetylene Cylinders	002 00
Compressed Gas Cylinders	002 00
Electric ARC Machines	002 00
Electrode Holders	002 00
Fire Extinguishing Equipment	002 00
Fire Prevention	002 00
Gas Welding and Cutting Equipment	002 00
Gas Supplies	002 00
Hoses	002 00
Hazardous By-Products	002 00
Hot Work in the Presence of Flammable Coatings	002 00
Hot Work in the Presence of Pressurized Systems	002 00
Hot Work on Closed Containers or Structures	002 00
Hot Work On Pipes, Tubes or Coils	002 00
Hot Work Operations	002 00
On-Aircraft Welding	002 00
Oxygen Cylinders	002 00
Protective Measures for Gases	002 00
Protective Screens	002 00
Safety for 'On Aircraft' Welding /Brazing aboard Ship	002 00
Safety Precautions for ARC Welding	002 00
Safety Precautions for Confined/Enclosed Spaces	002 00
Safety Precautions for Gas Shielded ARC Welding	002 00
Safety Precautions for Oxyacetylene Welding	002 00
Safety Precautions for Welding and Cutting Polyurethane Foam Filled Assemblies	002 00
Soft, Greasy Preservative Coatings	002 00

Title	WP/SWP Number
Space Cleaning	002 00
Special Fuel System/Fuel Cell Procedures	002 00
Testing Procedures for Confined/Enclosed Spaces	002 00
Physical Examinations	002 00
Protective Clothing and Equipment	002 00
Helmets and Shields	002 00
Protective Clothing	002 00
Protective Equipment	002 00
Respiratory Protective Clothing	002 00
Safety Precautions in Welding Operations	002 00
Safety Summary	002 00
Ventilation for General Welding and Cutting	002 00
Entry/Work Restrictions	002 00
Gas Free Engineering Classification Criteria	002 00
Local Exhaust Ventilation	002 00
Minimum Rate	002 00
Welding in Confined Spaces	002 00
Shielded Metal ARC Welding and Equipment	004 02
Shielded Metal ARC Welding (SMAW)	004 02
Characteristics	004 02
Welding Current, Voltage, and adjustments	004 02
AC Welding	004 02
Breaking the ARC	004 02
Heat Effects in Electric Arc Welding	004 02
Flat Position Welding	004 02
Horizontal Position Welding	004 02
Improper ARC Control	004 02
Overhead Position Welding	004 02
Starting the ARC	004 02
Vertical Position Welding	004 02
Welding Beads	004 02
Surface Preparation for Welding	006 01
General	006 01
Preweld Base Metal Cleaning Specifics	006 01
Preweld Filler Metal Cleaning Specifics	006 01
Generic Cleaning Methods	006 01
Degreasing	006 01
Dry Abrasive (Grit) Blasting	006 01
Dry Abrasive (Shell) Blasting	006 01
Steam Cleaning	006 01
Wet Abrasive (Grit) Blasting, Type 1	006 01
Generic Cleaning of Metal Groups	006 01
Cleaning Carbon Steel	006 01
Cleaning of Aluminum and Magnesium (Al / Mg)	006 01
Cleaning of Stainless Steel, Nickel and Cobalt Alloys	006 01
Cleaning of Titanium Alloys	006 01
Generic Mechanical Cleaning Methods	006 01
Mechanical Removal	006 01
Solvent Wiping	006 01
Weld Evaluation	005 04

Title	WP/SWP Number
Evaluation	005 04
General	005 04
Radiographic Inspection for the Purpose of Welder Certification	005 04
Film Evaluation	005 04
General	005 04
Inspection Equipment and Materials	005 04
Inspection Setup	005 04
Interpretation of Indications	005 04
Part Preparation	005 04
Visual Examination	005 04
Fillet Welds	005 04
Groove or Tube Welds	005 04
Weld Visual Examination	009 00
Arc Strikes	009 00
Defects	009 00
Subsurface Defects	009 00
Surface Defects	009 00
Discontinuity	009 00
Cracks	009 00
Crater (Star) Cracks	009 00
Longitudinal Cracks	009 00
Micro/Macro Fissures (Hot/Cold Cracks)	009 00
Root Cracks (Hot Cracks)	009 00
Throat Cracks	009 00
Toe Cracks (Cold Crack)	009 00
Transverse Cracks	009 00
Type of Cracks	009 00
Underbead (HAZ) Cracks (Cold Cracks)	009 00
Inclusions (Metallic or Nonmetallic)	009 00
Incomplete Fusion	009 00
Incomplete Joint Penetration	009 00
Overlap	009 00
Porosity	009 00
Types of Discontinuity	009 00
Undercut	009 00
Underfill	009 00
General	009 00
Examination of Welds	009 00
Inspection Procedure	009 00
Examples of Rejectable Welds	009 00
Visual Examination	009 00
Welding Aluminum Alloys (Group IV)	007 04
Cleaning	007 04
General	007 04
Heat Treatment / Stress Reliefs	007 04
Joint Design	007 04
Material Types	007 04
Safety	007 04
Shielding Gas	007 04
Tools	007 04

Title	WP/SWP Number
Tungsten	007 04
Weld Filler Materials	007 04
Weld Technique	007 04
Welding Carbon and Alloy Steel (Group I)	007 01
Cleaning	007 01
Electric Arc Welding Ferrous Metals	007 01
Heat Treatments / Stress Relief	007 01
Joint Design	007 01
Preparation of Weld Joint	007 01
Material Types	007 01
Metal-Arc Welding High Carbon Steels	007 01
Metal-Arc Welding High Hardness Alloy Steels	007 01
Metal-Arc Welding High Yield Strength, Low Alloy Structural Steels	007 01
Metal-Arc Welding Low Carbon Steels	007 01
Metal-Arc Welding Medium Carbon Steels	007 01
Metal-Arc Welding Tool Steels	007 01
Safety	007 01
Shielding Gas	007 01
Tools	007 01
Tungsten	007 01
Weld Filler Metals	007 01
Weld Technique	007 01
Braze Welding Steel	007 01
Chrome-Molybdenum Alloy Steels	007 01
General Principles in Welding Steel	007 01
Low Carbon Steel	007 01
Oxyacetylene Welding	007 01
Preheating	007 01
Weld Steel Plates	007 01
Welding Cast Iron	007 08
Brazing Technique	007 08
Cleaning	007 08
Joint Design	007 08
Material Types	007 08
Safety	007 08
Shielding Gas	007 08
Weld Filler Materials	007 08
Weld Technique	007 08
Braze Welding Cast Iron	007 08
Flame Adjustment	007 08
Tinning	007 08
Heat Treatments / Stress Relief	007 08
Brazing Gray Cast Iron	007 08
Brazing Malleable Iron	007 08
Welding Cobalt Alloys (Group VII)	007 07
Cleaning	007 07
Joint Design	007 07
Heat Treatments / Stress Relief	007 07
Material Types	007 07
Safety	007 07

Title	WP/SWP Number
Shielding Gas	007 07
Tools	007 07
Tungsten	007 07
Weld Filler Metals	007 07
Weld Technique	007 07
Welding Electrodes	003 05
Bare Electrodes Classification	003 05
Classification of Electrodes	003 05
Covered Electrodes Classification	003 05
ARC Action Obtained with a Light Coated Electrode	003 05
ARC Action Obtained with a Shielded ARC Electrode	003 05
Functions of Shielded ARC or Heavy Coated Electrodes	003 05
Light Coated Electrodes	003 05
Shielded ARC or Heavy Coated Electrodes	003 05
Direct Current ARC Welding Electrodes	003 05
Electrode Defects and their Effect	003 05
Gas Metal ARC Welding Metal Transfer	003 05
Globular	003 05
Pulsed Spray	003 05
Short-Circuiting	003 05
Spray Transfer	003 05
Storing Electrodes	003 05
Welding Electrodes	003 05
General	003 05
GTAW/GMAW	003 05
SMAW	003 05
Welding - General Information	007 00
Aluminum Alloys (Group IV)	007 00
Carbon and Alloy Steels (Group I)	007 00
Cobalt Alloys (Group VII)	007 00
General	007 00
Work Package Contents	007 00
Magnesium Alloys (Group V)	007 00
Nickel and Precipitation-hardening Nickel Alloys (Group III)	007 00
Other Metal Alloys	007 00
Stainless and Precipitation-Hardening Stainless Steel (Group II)	007 00
Thermal Treatments	007 00
Titanium Alloys (Group VI)	007 00
Tungsten Geometry	007 00
Welding Techniques	007 00
Welding Machines	003 06
ARC welding Equipment and Accessories	003 06
Alternating Current ARC Welding Machines	003 06
Direct Current Welding Machines	003 06
General	003 06
Welding Generating Equipment	003 06
Constant Current Weld Power	003 06
Constant Current Characteristics	003 06
Constant Voltage Weld Power	003 06
Constant Voltage Characteristics	003 06

Title	WP/SWP Number
Heat Distribution	003 06
Power Sources	003 06
Inverter Power Source	003 06
Welding Magnesium Alloys (Group V)	007 05
Cleaning	007 05
Heat Treats/ Stress Relief	007 05
Joint Design	007 05
Magnesium Surface Treatments	007 05
Material Types	007 05
Safety	007 05
Shielding Gas	007 05
Tools	007 05
Tungsten	007 05
Weld Filler Materials	007 05
Weld Technique	007 05
Gas Tungsten Arc Welding Magnesium	007 05
Spot Welding Magnesium	007 05
Cleaning For Spot Welding	007 05
Machine Settings	007 05
Pressure	007 05
Welding Nickel Alloys (Group III)	007 03
General	007 03
Safety	007 03
Material Types	007 03
Weld Filler Materials	007 03
Shielding Gas	007 03
Tungsten	007 03
Tools	007 03
Cleaning	007 03
Joint Design	007 03
Weld Technique	007 03
Heat Treatments	007 03
Post-Weld Heat Treatment Cracking	007 03
Stress Corrosion Cracking	007 03
Welding Other Metals	007 09
Cleaning	007 09
Copper Brazing	007 09
Copper Welding	007 09
Gas and Shielding Gas	007 09
Joint Design	007 09
Material Types	007 09
Safety	007 09
Tools	007 09
Tungsten	007 09
Weld Filler Materials	007 09
Weld Technique	007 09
Lead Welding	007 09
Cleaning	007 09
Gas and Shielding Gas	007 09
Joint Design	007 09

Title	WP/SWP Number
Material Types	007 09
Safety	007 09
Tools	007 09
Weld Filler Materials	007 09
Welding Technique	007 09
Welding Preparation	006 02
Defect Preparation For Welding	006 02
Fabrication and Fitup	006 02
Fixtures Preparation	006 02
Welding Stainless Steel Alloys (Group II)	007 02
Cleaning	007 02
Heat Treatments / Stress Relief	007 02
Joint Design	007 02
Material Types	007 02
Safety	007 02
Shielding Gas	007 02
Stainless Steel Finishing	007 02
Tools	007 02
Tungsten	007 02
Weld Filler Metals	007 02
Weld Technique	007 02
Welding Symbols and Codes	003 02
Basic Weld Symbols	003 02
Elements of a Welding Symbol	003 02
Location of the Weld With Respect to Joint	003 02
Location Significance of Arrow	003 02
Welding Symbols and Codes	003 02
Welding Technology and Repair Introduction	003 00
Description, Background Information	003 00
Metals Theory	003 00
Purpose	003 00
Scope	003 00
Warnings and Cautions Applicable to Hazardous Materials	003 00
Welding and Brazing Specifications	003 00
Welding Theory	003 00
Welding Titanium Alloys (Group VI)	007 06
Back-Up Bars	007 06
Cleaning	007 06
Heat Treatments / Stress Relief	007 06
Joint Design	007 06
Material Types	007 06
Safety	007 06
Shielding Gas	007 06
Spot and Seam Welding Titanium	007 06
Tools	007 06
Tungsten	007 06
Welding Chamber	007 06
Weld Filler Materials	007 06
Weld Technique	007 06
Weldment Preparation	007 06

THIS PAGE INTENTIONALLY LEFT BLANK

ORGANIZATIONAL, INTERMEDIATE AND DEPOT MAINTENANCE SAFETY

Reference Material

Aircraft Integral Tanks and Fuel Cells – Inspection and Repair of....T.O. 1-1-3
Air Force Occupational Safety and Health Standard....AFOSH
American National Standards Institute....ANSI Standard 788.2
Code of Federal Regulations....10CFR 40.13
Code of Federal Regulations....10CFR 40.22
Code of Federal Regulations Welding, Cutting, and Brazing General Requirements....29CFR 1910.252
Fire Protection and Prevention....AFOSH 127-56
Maintenance Instructions Organizational, Intermediate, and Depot Aircraft Fuel Cells and Tanks....NAVAIR 01-1A-35
Navy Safety and Occupational Health (NAVOSH) Program Manual....OPNAVINST 5100.23
Respiratory Protection Program....AFOSH STD 48-1
Respiratory Protection Program....TB MED 507
Specification for Tungsten and Oxide Dispersed Tungsten Electrodes for Arc Welding and Cutting....AWS A5.12
US Army Corps of Engineers Safety and Health Requirements....USACOE 385-1
Welding, Cutting, and Brazing....AFOSH STD 91-5

Alphabetical Index

Subject Page No.

Fire Hazards....11
Fire Protection....27
- Basic Precautions Outlined Herein Should Apply to the Following Operations....28
- Fire Watcher Assignment....27
- Fire Watcher Responsibilities....27
- Safety for On-Support Equipment Welding, Cutting, and Brazing....28

General Safety Precautions....5
Hazardous Materials....3
- Aeronautical and Support Equipment (SE)....5
- Compressed Air....4
- Flammables....4
- Heat and Cold....5
- Maintenance Procedures....5
- Thorium....3
- Thoriated Tungsten Welding Electrodes....4
- Wet/Dry Grinding Thoriated Tungsten Welding Electrodes....4

Health Protection and Ventilation....11
- Concentration of Toxic Substances....12
- Ventilation for Welding and Brazing....11

Alphabetical Index (Cont)

Subject — Page No.

Hot Work 15
- Acetylene Cylinders 21
- Compressed Gas Cylinders 19
- Electrode Holders 19
- Fire Extinguishing Equipment 16
- Electric Arc Machines 19
- Fire Prevention 15
- Gas Supplies 19
- Gas Welding and Cutting Equipment 19
- Hazardous By-Products 20
- Hoses 24
- Hot Work in the Presence of Flammable Coatings 17
- Hot Work in the Presence of Pressurized Systems 18
- Hot Work on Closed Containers or Structures 20
- Hot Work on Pipes, Tubes or Coils 18
- Hot Work Operations 16
- On-Aircraft Welding 17
- Oxygen Cylinders 23
- Protective Measures for Gases 26
- Protective Screens 25
- Safety for ‘On Aircraft’ Welding/Brazing Aboard Ship 17
- Safety Precautions for Arc Welding 24
- Safety Precautions for Gas Shielded Arc Welding 26
- Safety Precautions for Welding and Cutting Polyurethane Foam Filled Assemblies 27
- Safety Precautions in Oxyacetylene Welding 21
- Soft, Greasy Preservative Coatings 18
- Space Cleaning 16
- Special Fuel System/Fuel Cell Procedures 20
- Testing Procedures for Confined/Enclosed Spaces 21

Physical Examinations 3

Protective Clothing and Equipment 6
- Helmets and Shields 7
- Protective Clothing 9

Protective Equipment 11

Respiratory Equipment 12

Safety Precaution in Welding Operations 3

Safety Summary 3

Ventilation for General Welding and Cutting 12
- Entry/Work Restrictions 14
- Gas Free Engineering Classification Criteria 14
- Local Exhaust Ventilation 13
- Minimum Rate 12
- Welding in Confined Spaces 13

Record of Applicable Technical Directives

None

1. **SAFETY PRECAUTIONS IN WELDING OPERATIONS.**

WARNING

To prevent injury or death, each service's safety and health program must be followed. Section II contains generalized information extracted from safety and health related documents. Personnel shall follow their service safety and health program (OPNAVINST 5100.23, AFOSH, USACOE 385-1, and national consensus standards).

2. **SAFETY SUMMARY.**

a. The following are general safety precautions that are not related to any specific procedures and therefore do not appear elsewhere in this publication.

b. These are recommended precautions that personnel must understand and apply during all phases of operation and maintenance.

3. **PHYSICAL EXAMINATIONS.**

a. Annual physical examination may be required to permit early detection of possible detrimental effects resulting from chronic exposures.

b. Local medical authorities and the Industrial Hygienist shall set the frequency of specific tests based on exposure data.

4. **HAZARDOUS MATERIALS.**

a. Use all cleaning solvents, fuels, oils, adhesives and epoxies, and catalysts in a well ventilated area. Avoid frequent and prolonged inhalation of fumes. Concentrations of fumes of many cleaners, adhesives and esters are toxic and will cause serious deterioration of the body nervous systems and possible death if breathed frequently.

b. Avoid frequent or prolonged exposure to the skin. Wash thoroughly with soap and warm water as soon as possible after completing use of such materials. Take special precautions to prevent material from entering the eyes. If exposed, rinse the eyes in an eye bath fountain immediately and report to a physician.

WARNING

Thoriated tungsten poses a health hazard and should not be used except when mandated by technical instructions. Otherwise, replace 1% or 2% Thoriated Tungsten with 1.5% Lanthanum Tungsten for current and future welding operations. (*AWS A5.12 refers)*.

5. **THORIUM.**

a. Thorium is a naturally occurring radionuclide contained in various manufactured items such as incandescent gas mantles, welding rods, lenses and aircraft parts.

b. Manufactured items exempted in *10CFR 40.13* or authorized by general license in *10CFR 40.22* do not require a NRMP.

c. Grinding of thoriated electrodes can produce surface contamination.

6. **THORIATED TUNGSTEN WELDING ELECTRODES.**

a. Thoriated tungsten electrodes is manufactured using thorium contain radioactive material. Thorium is a radioactive element containing the Alfa (α-Radiation) particle. Although the Alfa particle has no penetrating ability, such as the Beta (β) or Gamma (γ) Ray, serious latent body damage could result if these particles where to be ingested into the body. This could result from small particles of the dust coming in contact with the welder's hands and fingers while grinding and shaping the electrodes. The particles could then be ingested into the body when eating or picking at body cavities. Since radiation poisoning is accumulative, and signs may not be visible until several years latter it is recommended that welders follow safe practices during grinding operations of thoriated electrodes. This could include wiping down the work area where grinding took place after dressing the electrodes and washing their hands after final operation of the task.

b. Special tungsten electrode grinding machines are available that contain the dust and grinding materials and use of such grinding machines may prove useful.

7. **WET/DRY GRINDING THORIATED TUNGSTEN WELDING ELECTRODES.**

a. Grinding Requirements:

(1) Isolate grinding areas by providing a separate grinding booth or room.

(2) Provide exhaust ventilation for the grinding booth or room.

(3) Clean the grinding area after each shift, when used, by vacuum cleaning or wiping.

(4) Dispose of grinding dust, chips and cleaning rags as normal waste materials as it is generated.

(5) Use wet grinding machines to contain dust.

(6) Ensure adequate ventilation by welding in large open areas whenever possible.

(7) In enclosed or restricted areas, provide dust respirators (3M Model 9940 or equivalent) for workers or provide adequate ventilation by hood or portable duct. Hoods, enclosures and portable ducts shall be designed and operated to the requirements of the latest edition of "Industrial Ventilation", American Conference of Governmental Industrial Hygienists. The face velocity for portable ducts shall be at least 1,500 feet per minute.

8. **FLAMMABLES.**

a. Keep all cleaning solvents, oils, esters and adhesives away from open flame space heaters, exposed element electric heaters, sparks or flame.

b. Do not smoke when using; or in the vicinity of flammable materials, or in areas where flammables are stored.

c. Provide adequate ventilation to disperse concentrations of potentially explosive fumes or vapors.

d. Provide approved containers for bulk storage of flammable materials and dispensers in the working areas. Keep all containers tightly closed when not in use.

9. **COMPRESSED AIR.**

a. Air pressure used in work areas for cleaning or drying operations, shall be regulated to 29 psi or less. Use approved safety equipment (goggles/face shield) to prevent injury to the eyes.

b. Do not direct the jet of compressed air at self or other personnel or so that refuse is blown onto adjacent work stations. If additional air pressure is required to dislodge foreign materials from parts, ensure that approved safety equipment is worn, and move to an isolated area.

c. Be sure that the increased air pressure is not detrimental or damaging to the parts before applying high pressure jets of air.

10. **HEAT AND COLD.**

a. Use thermally or similar insulated gloves when handling either heated or chilled parts to prevent burns or freezing of hands. Parts chilled to super-cold (-40°F to -65°F) temperatures can cause instant freezing of hands if handled without protective gloves.

b. Adequate precautions should be taken to prevent maintenance personnel from inadvertently coming in contact with the hot surfaces.

11. **AERONAUTICAL AND SUPPORT EQUIPMENT (SE).**

a. Improperly maintained support equipment can be dangerous to personnel and can damage parts.

b. Observe recommended inspections to avoid unanticipated failures. Use SE only for the purpose for which it was designed, and avoid abuse.

c. Be constantly alert for damaged equipment and initiate appropriate action for approved repair immediately.

e. When installing lift/support fixtures and rail set use only the attachment hardware items (nuts, bolts, screws, pins, etc.) supplied for specific use with the SE. Substitute items shall not be used.

12. **MAINTENANCE PROCEDURES.**

a. Wear safety glasses or other appropriate eye protection at all times.

b. Do not allow safety wire or wire clippings to fly from cutter when removing or installing wire.

c. Do not use fingers as guides when installing parts or to check alignment of holes. Use only correct tools and fixtures, and use as recommended.

d. Avoid shortcuts, such as using fewer than recommended attaching bolts, shorter bolts, or bolts of incorrect quality.

e. Heed all warnings in the manual text to avoid injury to personnel or damage to equipment.

13. **GENERAL SAFETY PRECAUTIONS.**

NOTE

Authority to weld on a particular aircraft, aircraft part or any support equipment must be obtained before any welding/brazing operation can be attempted. Authorization can be found in applicable maintenance manuals and directives.

a. Care should be taken in handling any type of welding equipment to prevent personnel injury from fire, explosions, or harmful agents. Safety precautions listed below must be strictly observed by workers who weld or cut metals.

b. Do not permit unauthorized persons to use welding or cutting equipment.

c. Do not weld in a building with wooden floors, unless the floors are protected from hot metal by means of sand, or other fireproof material. Be sure that hot sparks or hot metal will not fall on the legs and feet of the operator or on any welding equipment components.

d. Remove all flammable material such as cotton, oil, gasoline, etc., from the vicinity of welding.

e. Before welding or cutting, warn those in close proximity who are not protected by proper clothing or goggles.

f. Remove assembled parts that may become warped or otherwise damaged by the welding process.

g. Do not leave hot rejected electrode stubs, steel scrap, or tools on the floor about the welding equipment. These may cause accidents.

h. Keep a suitable fire extinguisher conveniently located at all times.

i. Mark all hot metal after welding operations are completed. Soapstone or chalk may be used for this purpose.

j. Contact lenses shall not be worn during welding/hot work operations. No contact lenses shall be worn while using a respirator.

k. No matches, cigarette lighters, or other flame producing devices, shall be carried on your person during welding/ hot work operations.

14. **PROTECTIVE CLOTHING AND EQUIPMENT.**

a. Protective clothing and equipment must be worn during welding operations.

b. During all oxyacetylene welding and cutting processes operators shall use welding goggles or glasses (with side shields) (Figure 1) equipped with a suitable filter lens to protect the eyes from intense light levels, heat, glare, and flying fragments of hot metal (Table 1).

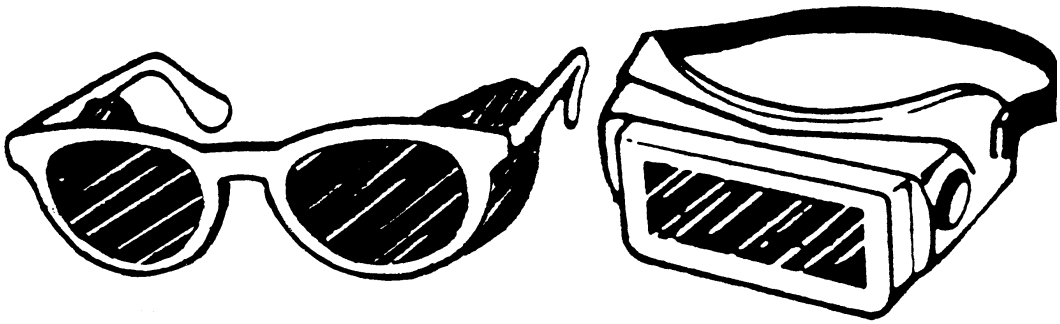

Figure 1. Welding Goggles and Glasses

Table 1. Lens Shades for Welding and Cutting

Method	Electrode Diameter Inch	Metal /Thickness Inch	Lens* Number
SMAW	1/16 to 5/32	----	10
	3/16 to 1/4	----	12
	5/16 to 3/8	----	14
GMAW	1/16 to 5/32	Ferrous	10/11
	----	Nonferrous	11
GTAW	----	Ferrous	10/11
	----	Nonferrous	10/11
Atomic Hydrogen	----	----	10 to 14
Carbon-arc	----	----	10/12
Air Arc Cutting	5/32 to 1/4 carbon	----	10 to 14
Gas Torch	----	to 1/8	4 or 5
	----	1/8 to 1/2	5 or 6
	----	over 1/2	6 or 8
Brazing Torch	----	----	3 or 4
Cutting Torch	----	to 1	3 or 4**
	----	1 to 6	4 or 5
	----	over 6	5 or 6
Soldering Torch	----	----	2

*Lens which are too dark or too light will cause eyestrain.
**Goggles need sideshields.

c. The Shielded Metal Arc Welding (SMAW) and Flux Cored Arc Welding (FCAW) processes require the chipping of slag after the weld has been deposited. Operators shall use a welding hood for chipping slag.

d. All other electric welding processes require welding hoods equipped with a suitable filter glass to protect against the intense ultraviolet and infrared rays (Figure 2).

e. When others are in the vicinity of the electric welding process the area must be screened so that the arc cannot be seen either directly or by reflection from glass or metal.

15. **HELMETS AND SHIELDS.**

a. Welding arcs are intensely brilliant lights. They contain a proportion of ultraviolet light which may produce eye damage. For this reason, no one should look at the arc with the naked eye within a distance of 50 feet. The brilliance and danger of the light depends on the welding method, current, and material being welded. Operators, fitters, and others working nearby need protection against arc radiation. Since arc radiation decreases rapidly in intensity with distance, the closest workers need the most protection.

b. The welder needs a helmet to protect the eyes and face from harmful light and particles of hot metal. The welding helmet (Figure 2) is generally constructed of a pressed fiber insulating material. It has an adjustable headband that makes it usable by persons with different head sizes. The helmet is dull black in color to minimize reflection and glare produced by the intense light. The helmet fits over the head and can be swung upward when not welding. The chief advantage of the helmet is that it leaves both hands free, making it possible to hold the arc and weld at the same time.

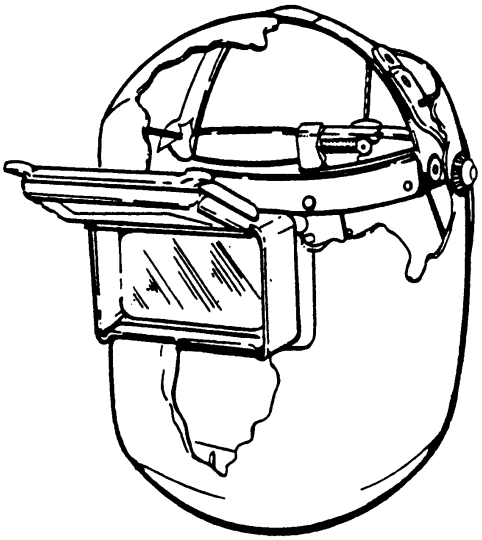

CUTAWAY VIEW
OF WELDING HELMET

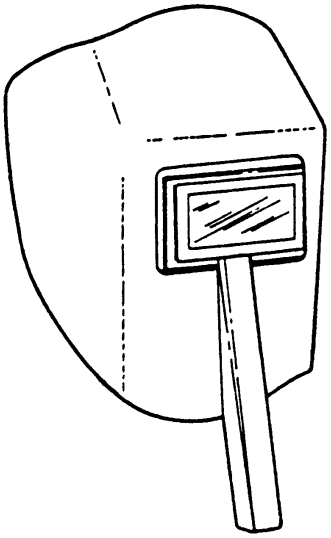

HAND HELD SHIELD

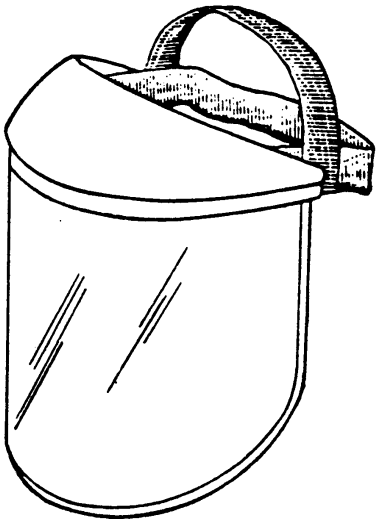

CLEAR FACE SHIELD

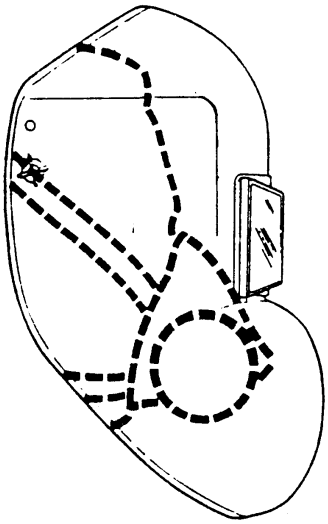

HELMET WITH RESPIRATOR

18578

Figure 2. Welding Helmets and Shields

c. The hand shield (Figure 2) provides the same protection as the helmet except that it is held in position by the handle. This type of shield is frequently used by an observer or a person who welds for a short period of time.

NOTE

The colored glass must be manufactured in accordance with specifications detailed in the ”National Safety Code for the Protection of Hands and Eyes of Industrial Workers”, issued by the National Bureau of Standards, Washington DC, OSHA Standard, 29CFR 1910.252 Welding, Cutting and Brazing, American National Standards Institute Standard (ANSI) Z87.1 1979, ”American National Standard Practice for Occupational and Educational Eye and Face Protection”.

d. The protective welding helmet has a glass window, containing a filter lens specifically designed to prevent flash burns and possible eye damage through absorption of the infrared and ultraviolet rays produced by the arc. Lenses come in various optical densities with different shades to be used when welding various metals with different methods (Table 1).The color of the lenses, usually green, blue, or brown, is an added protection against the intensity of white light or glare. Colored lenses make it possible to see the metal more clearly and weld more efficiently.

e. Gas metal-arc (GMAW) welding requires darker filter lenses than shielded metal-arc (SMAW) welding, because it produces less smoke to absorb arc rays.

f. Do not weld with cracked or defective shields because penetrating rays from the arc may cause serious burns. Be sure that the colored glass plates are the proper shade for arc welding. Protect the colored glass plate from spatter by using a cover glass. Replace these cover glasses when damaged or spotted by molten metal spatter.

g. Face shields and safety glasses shall be worn during chipping and grinding operations.

h. In some welding operations, the use of mask-type respirators is required. Helmets with the ”bubble” front design can be adapted for use with respirators.

16. **PROTECTIVE CLOTHING.**

a. Personnel exposed to the hazards created by welding, cutting or brazing operations shall be protected by personal protective equipment within OSHA standard 29CFR 1910.137 Personal Protective Equipment. Appropriate protective clothing (Figure 3) required for any welding operation will vary with the size, nature and location of the work to be performed.

b. Cotton clothing should be worn during all welding operations to protect welder from metal spatter and ultraviolet light. All other clothing such as jumpers or overalls should be reasonably free from oil or grease.

c. Flameproof aprons or jackets made of leather, or other suitable material shall be worn for protection against spatter of molten metal, radiated heat, and sparks. Capes or shoulder covers made of leather or other suitable materials should be worn during overhead welding or cutting operations. Leather skull caps may be worn under helmets to prevent head burns.

d. Sparks may lodge in rolled-up sleeves or pockets of clothing, of cuffs or overalls or trousers. Therefore, sleeves and collars should be kept buttoned and pockets eliminated from the front of overalls and aprons. Trousers or overalls should not be turned up on the outside. For any welding operation, lace-up, high boots and safety toes (such as those conforming to MIL-B-24911, Boots, Fliers, or A-A-1803 Boots, Safety, Men’s) shall be worn. No low cut boots or shoes allowed. In production work, a sheet metal screen in front of the worker’s legs can provide further protection against sparks and molten metal in cutting operations.

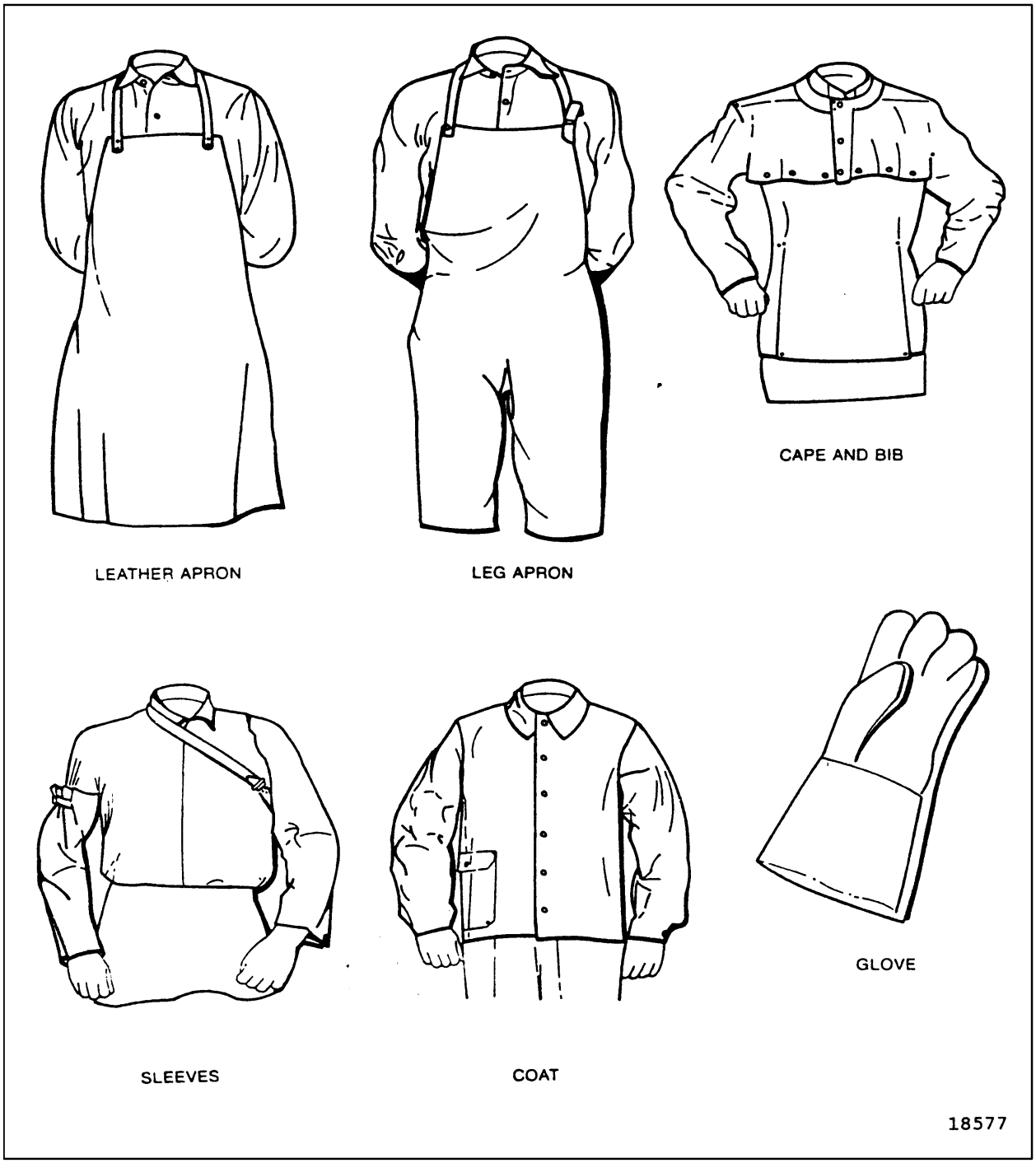

Figure 3. Protective Clothing

e. Flameproof gauntlet gloves, preferably of leather, should be worn to protect the hands and arms from the rays of the arc, molten metal spatter, sparks, and hot metal. Leather gloves should be of sufficient thickness that they will not shrivel from heat, burn through, or wear out quickly. Do not allow oil or grease to come in contact with the gloves because this will reduce their flame resistance and cause them to be readily ignited or charred.

17. **PROTECTIVE EQUIPMENT.**

a. Where there is exposure to sharp or heavy falling objects or a hazard of bumping in confined spaces, hard hats or head protectors should be used.

b. For welding and cutting, overhead, or in confined spaces, ear protection is sometimes desirable.

c. When welding in any area, the operation should be adequately screened to protect nearby workers or passers-by from the glare of welding. The screens should be so arranged that no serious restriction of ventilation exists. The screens should be so mounted that they are about two feet above the floor unless the work is performed at such a level that the screen must be extended nearer the floor to protect adjacent worker. The height of the screen is normally six feet but may be higher depending upon the situation. The screens, if metal, should be painted with a finish of low reflectivity. If other materials are used, the surface should be of low reflectivity.

d. During the welding and cutting operations sparks and molten spatter are formed, and sometimes fly appreciable distances. For this reason welding or cutting should not be done near flammable materials, unless every precaution is taken to prevent ignition.

e. Whenever possible flammable materials attached to or near equipment requiring welding, brazing, or cutting should be removed. If removal is not practical, a suitable shield of authorized heat resistant material should be used to protect the flammable material. Fire extinguishing equipment for any type of fire that may be encountered must be available.

18. **FIRE HAZARDS.**

a. Fire prevention and detection are the responsibility of welders, cutters, and supervisors. The elaboration of basic precautions to be taken for fire prevention during welding or cutting is outlined in the Standard for Fire Prevention in Use of Cutting and Welding Processes, National Fire Protection Association Standard 51B. Some of the basic precautions for fire prevention in welding or cutting work are given below:

b. When welding or cutting parts of vehicles, the oil pan, gasoline tank, and other parts of the vehicle should be considered fire hazards and effectively shielded from sparks, slag, and molten metal.

19. **HEALTH PROTECTION AND VENTILATION.**

a. The following requirements have been established to provide guidelines and procedures to maximize protection for welders and torch brazers exposed to flammable conditions, confined areas, hazardous materials and contamination.

20. **VENTILATION FOR WELDING AND BRAZING.**

a. It is recognized that in individual instances other factors may be involved in which case ventilation or respiratory protective devices should be provided as needed to meet the equivalent requirements of this section. Such factors would include: (1) atmospheric conditions; (2) heat generated; (3) presence of volatile solvents; in all instances, however, the required health protection, ventilation standards and standard operating procedures for new as well as old welding operations should be coordinated and cleared through the Safety Officer, Gas Free Engineer/Fire Inspector and Public Health Officer as required.

NOTE

Specific procedures are covered by the Navy Gas Free Engineering Program as detailed in the Fuel Cell Manual, NAVAIR 01-1A-35.

21. **CONCENTRATION OF TOXIC SUBSTANCES.**

a. Local exhaust or general ventilating systems shall be provided and arranged to keep the amount of toxic fumes, gas or dust below the acceptable concentration of toxic dust and gases: American National Standard Institute Standard Z49.1 the latest Threshold Limit Values (TLV) of the American Conference of Governmental Industrial Hygienists; or the exposure limits as established by Public Law 91-596, Occupational Safety and Health Act. Compliance shall be determined by sampling of the atmosphere. Samples collected shall reflect the exposure of the persons involved. When a helmet is worn, the samples shall be collected under the helmet.

22. **RESPIRATORY PROTECTIVE EQUIPMENT.**

a. Individual respiratory protective equipment should be well maintained. Only respiratory protective equipment approved by the US Bureau of Mines, National Institute of Occupational Safety and Health or other governmental approved testing agency shall be utilized.

b. Guidance for selection, care and maintenance of respiratory protective equipment is given in Practices for Respiratory Protection, American National Standard Institute Standard 788.2, TB MED 507 and AFOSH 48-1.

c. Respiratory protective equipment should not be transferred from one individual to another without being cleaned.

23. **VENTILATION FOR GENERAL WELDING AND CUTTING.**

a. Mechanical ventilation shall be provided when welding or brazing is performed:

(1) In a space of less than 10,000 cubic feet per welder.

(2) In a room having a ceiling height of less than 16 ft.

(3) In confined spaces or where the welding space contains partitions, balconies, or other structural barriers to the extent that they significantly obstruct cross ventilation.

24. **MINIMUM RATE.**

a. Such ventilation shall be at the minimum rate of 2,000 cubic feet per minute per welder, except where local exhaust hoods and boots as in paragraph 25 [**LOCAL EXHAUST VENTILATION**], or airline respirators approved by the US Bureau of Mines, National Institute of Occupational Safety and Health or other governmental approved testing agency may be used. When welding with rods larger than 3/16-inches in diameter, the ventilation shall be higher as shown:

Welding Rod diameter (inches)	Required Ventilation (CFM)
1/4	3500
3/8	4500

b. Natural ventilation is considered sufficient for welding or cutting operations where the restrictions in paragraph 25 [**LOCAL EXHAUST VENTILATION**] are not present.

25. **LOCAL EXHAUST VENTILATION.**

a. Mechanical local exhaust ventilation may be by means of either of the following:

(1) Hoods. Freely movable hoods intended to be placed by the welder as near as practicable to the work being welded and provided with a rate of air flow sufficient to maintain a velocity in the direction of the hood to 100 linear feet per minute in the zone of welding when the hood is at its most remote distance from the point of welding. The rates of ventilation required to accomplish this control velocity using a 3-inch wide flanged suction opening are shown in Table 2.

Table 2. Required Exhaust Ventilation

Welding Zone	Minimum Air Flow, Cubic Feet/Minute*	Duct Diameter Inches**
4 to 6 inches from arc or torch	150	3
6 to 8 inches from arc or torch	275	3-1/2
8 to 10 inches from arc or torch	425	4-1/2
10 to 12 inches from arc or torch	600	6-1/2

***When brazing with cadmium bearing materials or when cutting on such materials increased rates of ventilation may be required.**

****Nearest half-inch duct diameter based on 4,000 feet per minute velocity in pipe.**

(2) Fixed Enclosure. A fixed enclosure must have a top and not less than two sides which surround the welding or cutting operations and a rate of airflow sufficient to maintain a velocity away from the welder of not less than 100 linear feet per minute. Downdraft ventilation tables require 150 cubic feet per minute per square foot of surface area. This rate of exhausted air shall be uniform across the face of the grill.

26. **WELDING IN CONFINED SPACES.**

CAUTION

All welding spaces must be classified by a Gas Free Engineer, Qualified Navy Aviation Gas Free Engineering Technician. Air Force should refer to AFOSH 127-100 and AFOSH 127-25. The controlling documents for gas free engineering program are: NAVSEA 56470-AA-SAF-010 (ashore) and NAVSEA 59086-CH-STM-030 (afloat). The controlling document for the Aviation Gas Free Engineering (AVGFE) program is NAVAIR 01-1A-35.

27. **GAS FREE ENGINEERING CLASSIFICATION CRITERIA.**

a. The following criteria are used to classify confined or enclosed spaces including those with open tops, but with a depth or configuration sufficient to restrict the natural movement of air, and those which are normally closed with limited or restricted openings for entry and exit.

b. Confined or enclosed spaces are classified based on existing or potential hazards as defined in Table 3.

NOTE

Paragraphs 28 [**ENTRY/WORK RESTRICTIONS]** through 29 [**HOT WORK**] are applicable to Air Force.

28. **ENTRY/WORK RESTRICTIONS.**

a. The following restrictions apply to entry and work in or on Class I and Class II confined or enclosed spaces.

(1). CLASS I SPACES. Entry into and work in or on class I spaces shall not be permitted under normal operations and is authorized only under the following circumstances:

(a) **Entry into Class I spaces is authorized only in cases of extreme emergency such as rescue efforts, emergency repairs, etc. In the event of any such emergency entry or work, personnel entering the space shall be equipped with the following:**

(b) Air-supplied respirator, MIL-SPEC GGG-M-125/1B.

(c) Harness suitable to permit extraction of the person from the space.

(d) Lifeline securely attached to the harness.

(e) Other necessary personal protective equipment required by the conditions and exposure.

(f) Communication shall be maintained between the person entering the space and safety observer outside the space.

(g) Emergency rescue personnel, equipped with the above listed equipment, and any additional equipment which may be necessary to effect a rescue shall be stationed immediately outside the entry to the confined/enclosed space.

(h) Explosion-proof lights only shall be used in fuel cells.

(i) COLD WORK. Cold work may be performed on the exterior areas of a Class I space, from outside the space, provided that the work performed does not generate heat or other ignition sources which may cause ignition of atmosphere within the space.

(j) HOT WORK. Hot work may be performed on the exterior areas of a Class I space from outside the space, when the atmosphere inside the space does not contain flammable, explosive, or oxygen enriched atmosphere. The Class I classification of the space in this case, would be based on oxygen depletion or the presence of toxins, and would include spaces which are inerted, pressed up or a combination thereof.

(2). CLASS II SPACES. Contamination in Class II spaces shall be identified and removed to the maximum degree possible by cleaning, ventilating, or recommended methods prior to entry or work.

Table 3. Required Exhaust Ventilation

Class I Space
A space that contains atmospheres or conditions that are or may reasonably be expected to become Immediately Dangerous to Life or Health (IDLH).Such conditions include the presence of: **1. Flammable vapors at a concentration of 10% or greater of the lower flammable/explosion limit.** **2. Oxygen content less than 16% or greater than 22%.** **3. Presence of toxics which exceed a level from which a person could escape within 30 minutes without impairing symptoms or irreversible health effects.** **4. Any combination of these conditions.**
Class II Space
A confined or enclosed space containing atmosphere or conditions that are or may reasonably be expected to become dangerous, but are not immediately life threatening. Such conditions include the presence of: **1. Flammables.** **2. Flammable atmosphere in concentrations at or greater than 1% but less than 10% of the lower flammable/explosive limit.** **3. Oxygen levels greater than 16% but less than 20% or greater than 21% but less than 22%.** **4. Toxics at concentrations below levels that are IDLH but at or above established permissible exposure limits.** **5. Any combination of such conditions.**
Class III Space
A confined or enclosed space containing atmospheres or conditions that are or may reasonably be expected to become contaminated, but not to a level that is dangerous or immediately life threatening. Such conditions include the presence of: **1. Flammables.** **2. Flammable atmospheres in concentrations less than 1% of the Lower Explosive Limit (LEL).** **3. Oxygen levels consistent with outside ambient conditions (20% or 21%).** **4. Toxics at concentrations below Permissible Exposure Limits (PEL).** **5. Prescribed conditions for flammables, oxygen, and toxics can be reliably and consistently maintained.** **6. Any combination of such conditions.**
Class IV Space
A space that contains no flammables or toxics, has an oxygen level between 20% to 21%, and presents little potential for generation of hazardous conditions as described above.

29. **HOT WORK.**

a. The following paragraphs apply to all hot work performed in confined or enclosed spaces, or hot work performed on closed structures such as pipes, fuel cells, ducts, tubes, jacketed vessels and similar items. Air Force shall use AFOSH 91-5.

30. **HOT WORK OPERATIONS.**

a. Hot work for the purpose of gas free engineering, includes any work that produces heat by any means, of a temperature of 400°F (204°C) or more, in the presence of flammables or flammable atmospheres, such as:

- **Flame Heating.**
- **Welding.**
- **Brazing.**

WARNING

Do not perform hot work without specific authorization of activity Gas Free Engineer (GFE) or hot work certified Aviation Gas Free Engineering Technician (AVGFET). Inerting shall not normally be used as a means to permit hot work on any component of a fuel system that contains aviation gasoline or Jet Petroleum (JP) fuels.

31. **SPACE CLEANING.**

a. Prior to commencing hot work in a confined or enclosed space, the space shall be tested, inspected, cleaned, and ventilated as required by the provisions of this manual and the applicable aircraft MIM.

32. **FIRE PREVENTION.**

a. A fire guard shall be posted at the work site when hot work is to be conducted in the presence of combustible materials or flammable residues. The fire guard shall be trained in the nature of any fire that may occur, and be proficient in the proper use of fire extinguishing equipment.

b. Where hot work may create temperature increases in a wall, bulkhead, or other separating structure, an additional fire guard shall be posted on the side opposite the work site. A system of communication shall be established to permit the fire guard to convey the development of hazardous conditions on the opposite side of separating structures, and to signal the necessity to stop work. Air Force shall refer to AFOSH 127-56.

CAUTION

Vaporizing liquid fire extinguishers such as CO_2 shall not be used in confined or enclosed spaces.

NOTE

Exceptions may be made in selection of fire extinguishing equipment where restrictions exist due to the nature of the space.

33. **FIRE EXTINGUISHING EQUIPMENT.**

a. Air Force shall use fire extinguishing equipment as prescribed by the local Fire Department.

b. Suitable fire extinguishing equipment shall be provided based on the nature and extent of the flammables or combustibles present and the type of fire that may occur.

c. Water extinguishers or water hoses equipped with fog nozzles or applicators are most suitable for hot work in the presence of ordinary class A, combustible material or flammable residues or coatings. Fire extinguishing equipment shall be selected based on the following:

(1) Ability of extinguishing agents to suppress the fire.

(2) Any hazard that may be created by the discharge of the agent into the space.

(3) The capacity of the equipment in relationship to the size and intensity potential fires.

34. **SAFETY FOR "ON AIRCRAFT" WELDING/ BRAZING ABOARD SHIP.**

NOTE

Welding aboard ships on aircraft should be done only in cases where parts cannot be removed to a welding area. All safety practices in this manual must be followed and authority to weld *shall be sole responsibility of the Commanding Officer*.

35. **ON-AIRCRAFT WELDING.**

a. Obtain Hot Work permit in accordance with service instructions or program manuals. Air Force shall refer to AFOSH 91-5.

36. **HOT WORK IN THE PRESENCE OF FLAMMABLE COATINGS.**

a. Air Force shall refer to AFOSH 91-5. The flammability of coatings shall be determined prior to starting hot work. If flammability of coating is unknown, tests shall be conducted to determine flammability, or worst case conditions must be assumed to exist.

b. Coatings known or found by testing to be combustible shall be removed from the location of the hot work, to a distance sufficient to prevent ignition or out-gassing from temperature increase of coating materials in the unstripped areas. The distance required for stripping of coating material will vary according to the material involved and the nature of the hot work, but in no case shall be less than 4 inches on all sides from the outermost limits of the hot work.

c. To conduct hot work, proceed as follows:

NOTE

Suitable fire extinguishing equipment shall be immediately available, charged and ready for instant use.

(1) Periodic or continuous testing shall be conducted from start of hot work to ensure flammable atmospheres are not being produced.

(2) Where significant out-gassing is detected, hot work shall be stopped and further stripping conducted, artificial cooling methods employed, or other means applied to prevent temperature increases in the unstripped areas.

(3) Flame or uncontrolled heat shall not be used for stripping flammable coatings.

(4) Methods shall be employed to prevent hot slag or sparks from falling onto flammable coatings in the area of the hot work.

(5) The wetting down of surrounding areas to reduce ignition potential may also be used to minimize ignition, consistent with the nature of the coating operation.

37. **SOFT, GREASY PRESERVATIVE COATINGS.**

a. Soft, greasy coatings may present hazards more serious than those presented by hard surface coatings. Some soft coatings may have much lower flash points, produce out-gassing at lower temperatures, and may ignite more easily from hot slag or sparks.

b. Some materials may, under certain conditions, ”surface flash”, which would involve the entire coated area. The above problems are often further complicated by difficulty in walking, standing, and maneuvering on slippery surfaces, increasing the possibility of falls, dropping lighted torches on un-stripped material, etc. Therefore, accomplish the following prior to start of hot work in a confined or enclosed space coated with soft, greasy preservatives:

(1) Strip, clean, or otherwise remove the preservative from the area of the hot work a distance sufficient to prevent out-gassing and to prevent ignition from heat, sparks, slag, etc.

(2) The space shall be tested and certified ”**SAFE For Hot Work**” by the activity GFE or hot work certified AVGFET.

NOTE

Valves to pipes, tubes, and similar items shall be closed and the pipes blanked off, where possible, to prevent inadvertent discharge or backflow of materials into the space.

38. **HOT WORK ON PIPES, TUBES OR COILS.**

a. Pipes, tubes, coils, or similar items which service or enter and exit a confined or enclosed space shall be flushed, blown, purged, or otherwise cleaned and certified ”**SAFE For Hot Work**” prior to the start of hot work.

b. Where they are not cleaned and certified, they shall be prominently tagged ”**NOT Safe For Hot Work**”.

c. The Navy Gas Free Certificate for the space shall also contain a notation to that effect.

39. **HOT WORK IN THE PRESENCE OF PRESSURIZED SYSTEMS.**

a. Prior to start of hot work in areas that contain pressurized systems (such as fuel, hydraulic, liquid oxygen etc.), the systems shall be depressurized if there is a possibility that these systems could be affected by the hot work.

b. Piping, fittings, valves, and other system components shall be protected from damage resulting from contact with flames, arcs, hot slag, or sparks. care shall be taken to ensure that all contamination within the space, such as leaking hydraulic fluid, is cleaned and removed prior to start of hot work.

c. Hydraulic fluid in the presence of high temperatures can decompose and produce highly toxic byproducts.

40. **COMPRESSED GAS CYLINDERS.**

a. Compressed gas cylinders shall be transported, handled, and stored in accordance with service standards.

b. Compressed gas cylinders or gas manifolds used in welding and cutting operations shall not be taken into a confined or enclosed space.

c. Compressed gas cylinders or gas manifolds shall be placed outside the space, in open air, in an area not subject to any fire, explosion, or emergency that may occur within the space.

41. **GAS WELDING AND CUTTING EQUIPMENT.**

a. Gas welding and cutting equipment such as hoses, connections, torches, etc., shall be inspected, tested, operated, and maintained in accordance with current service standards.

42. **GAS SUPPLIES.**

a. Gas supplies shall be turned off at the cylinder or manifold outside the space when equipment is unattended or unused for substantial periods of time, such as breaks or lunch periods.

b. Turn off gas supplies and remove torches and hoses from the space during shift changes or if the equipment is to be idle overnight.

c. Open-ended hoses shall be immediately removed from the space when torches or other devices are removed from the hose.

43. **ELECTRIC ARC MACHINES.**

a. Electric arc machines shall not be taken into a confined or enclosed space.

b. Electric arc equipment shall be inspected, tested, operated, and maintained in accordance with current service standards.

44. **ELECTRODE HOLDERS.**

a. When electrode holders are to be left unattended or unused for substantial periods of time such as breaks or lunch periods, the electrodes shall be removed from the holders.

b. The holders shall be placed in a safe location and protected, and the power switch to the equipment shall be turned off. If unattended for extended periods or the equipment is to be idle overnight, electrode holders, cables, and other equipment shall be removed from the space and the power supply to the equipment disconnected.

WARNING

Do not perform hot work without specific authorization of activity Gas Free Engineer (GFE) or hot work certified Aviation Gas Free Engineering Technician (AVGFET).

45. **HAZARDOUS BY-PRODUCTS.**

a. Welding, cutting or burning in the presence of certain materials (such as hydraulic fluids), or the application of heat to such materials can result in the decomposition of the materials and the production of hazardous byproducts.

b. Procedures shall be established to ensure that hot work is not conducted on or in the vicinity of such materials. Welding or cutting operations which produce high levels of ultra-violet radiation shall not be conducted within 200 feet of chlorinated solvents.

CAUTION

If flammable residues, liquids, or vapors are present, the object shall be made safe. Objects such as those listed above shall also be inspected to determine whether water or other nonflammable liquids are present which, when heated, would build up excessive pressure. If such liquids are determined to be present, the object should be vented, cooled, or otherwise made safe during the application of heat.

46. **HOT WORK ON CLOSED CONTAINERS OR STRUCTURES.**

a. Drums, containers, or hollow structures that have contained flammable substances shall be treated as follows:

(1) Before welding, cutting, or heating, the object should be filled with water or thoroughly cleaned of flammable substances, ventilated, and tested.

(2) Before heat is applied to a drum, container, or hollow structure, a vent or opening shall be provided for the release of any pressure buildup during the application of heat.

(3) Before welding, cutting, heating, or brazing is begun on structural voids, the object shall be inspected and, if necessary, tested for the presence of flammable residues, liquids, or vapors.

(4) Jacketed vessels shall be vented before and during welding, cutting, or heating operations, in order to release any pressure that may build up during the application of heat.

47. **SPECIAL FUEL SYSTEM/FUEL CELL PROCEDURES.**

a. Welding and torch brazing operations performed in or around fuel systems and fuel cells must be accomplished by thoroughly proficient operators following specific procedures.

(1) Respond to supervision.

(2) Are adequately trained.

(3) Understand emergency evacuation procedures from fuel cells as described in NAVAIR 01-1A-35, T.O. 1-1-3.

NOTE

Details of these procedures are found in NAVAIR 01-1A-35, T.O. 1-1-3

48. **TESTING PROCEDURES FOR CONFINED/ ENCLOSED SPACES.**

a. Air Force shall refer to AFOSH 127-25 T.O. 1-1-3.

b. Navy shall refer to NAVAIR 01-1A-35 as applicable.

c. Prior to beginning work ensure a hot work permit or GFE certificate Is posted.

49. **SAFETY PRECAUTIONS IN OXYACETYLENE WELDING.**

a. The following safety precautions must be observed:

NOTE

The compressed gas cylinder shall be securely fastened to prevent tipping and the regulator and gage shall be in proper working condition.

(1) Do not experiment with torches or regulators in any way.

(2) Do not use oxygen regulators with acetylene cylinders:

(3) Always use the proper tip or nozzle, and always operate it at the proper pressure for the particular work involved. This information should be taken from work sheets or tables supplied with the equipment.

(4) When not in use, make certain that the torch is not burning and that the valves are tightly closed. Do not hang the torch with its hose on the regulator or cylinder valves. If left unattended for 15 minutes or more, secure before leaving welding area.

(5) Do not light a torch with a match, from hot metal, or in a confined space. The explosive mixture of acetylene and oxygen might cause personal injury or property damage when ignited. Use friction lighters, stationary pilot flames, or some other suitable source of ignition.

(6) When working in confined spaces provide adequate ventilation for the dissipation of explosive gases that may be generated.

(7) Keep a clear space between the cylinder and the work so that the cylinder valves can be reached easily and quickly.

(8) Store full and empty cylinders separately and mark the latter MT.

(9) Never use cylinders for rollers, supports, or any purpose other than that for which they are intended.

50. **ACETYLENE CYLINDERS.**

a. Always refer to acetylene by its full name and not by the word ”gas” alone.

b. Acetylene cylinders must be handled with care to avoid damage to the valves or the safety fuse plug. The cylinders must be stored upright, well protected and in a dry location at least 20 feet from highly combustible materials such as oil, paint or flammables. If received in other than vertical position, the cylinder must be stored in the *upright position at least 8 hours prior* to use. Most cylinders are fitted with valve protection caps. These caps must always be in place, hand tight, except when cylinders are in use or connected for use. Do not store the cylinders near radiators, furnaces, or in any above normal temperature area. In tropical climate, care must be taken not to store acetylene in areas where the temperature is in excess of 137°F (58° C). Heat will increase the pressure which may cause the safety fuse plug in the cylinder to blow out. Storage areas should be located away from elevators, gangways, or other places where there is danger of their being knocked over or damaged by falling objects.

c. A suitable truck, chain, or strap must be used to prevent cylinders from falling or being knocked over while in use. Cylinders should be kept at a safe distance from the welding operation so that there will be little possibility of sparks, hot slag, or flames reaching them. They should be kept away from radiators, piping systems, layout tables, etc., which may be used for grounding electrical circuits.

d. Never use acetylene from cylinders without reducing pressure with a suitable pressure reducing regulator and flashback attachments. Never use acetylene at pressures in excess of 15 psi.

e. Before attaching the pressure regulators, open each acetylene cylinder valve for an instant to blow dirt out of the nozzles. Wipe off the connection seat with a clean cloth. Do not stand in front of valves when opening them.

f. Outlet valves which have become clogged with ice should be thawed with warm water. Do not use scalding water or an open flame.

g. Be sure the regulator tension screw is released before opening the cylinder valve. Always open the valve slowly to avoid strain on the regulator gage which records the cylinder pressure. Do not open the valve more than one and one-half turns. Usually one-half turn is sufficient. Always use the special T-wrench provided for opening the acetylene cylinder valve. Leave this wrench on the stem of the valve while the cylinder is in use so that the acetylene can be turned off quickly in an emergency.

h. Acetylene is a highly combustible fuel gas and great care should be taken to keep sparks, flames, and heat away from the cylinders. Never open an acetylene cylinder valve near other welding or cutting work.

i. Never test for an acetylene leak with an open flame. Test all joints with leak test compound, MIL-L-25567. Should a leak occur around the valve stem of the cylinder, close the valve and tighten the packing nut. Cylinders leaking around the safety fuse plug should be taken outdoors, away from all fires and sparks, and the valve opened slightly to permit the contents to escape.

j. Never interchange acetylene regulators, hose, or other apparatus with similar equipment intended for oxygen.

k. Always turn the acetylene cylinder so that the valve outlet will point away from the oxygen cylinder.

l. When returning empty cylinders, see that the valves are closed to prevent escape of residual acetylene or acetone solvent. Screw on protecting caps.

51. **OXYGEN CYLINDERS.**

WARNING

Oil or grease in the presence of oxygen will ignite violently, especially in an enclosed pressurized area.

NOTE

Oxygen shall always be referred to by its full name.

a. Oxygen cylinders shall not be stored near highly combustible material, especially oil and grease; or near reserve stocks of acetylene or other fuel-gas cylinders, or near any other substance likely to cause or accelerate fire.

b. Oxygen cylinders in storage shall be separated from fuel-gas cylinders or combustible materials (especially oil or grease), a minimum distance of 20 feet or by a noncombustible barrier at least 5 feet high having a fire-resistance rating of at least one-half hour.

c. Where a liquid oxygen system is to be used to supply gaseous oxygen for welding or cutting and the system has a storage capacity of more than 13,000 cubic feet of oxygen (measured at 14.7 psi and 70°F (21°C)), connected in service or ready for service, or more than 25,000 cubic feet of oxygen (measured at 14.7 psi and 70°F (21°C), including unconnected reserves on hand at the site, it shall comply with the provisions of the Standard for Bulk Oxygen Systems at Consumer Sites, NFPA No. 566-1965, National Fire Protection Association.

d. When oxygen cylinders are in use or being moved, care must be taken to avoid dropping, knocking over, or striking the cylinders with heavy objects. Do not handle oxygen cylinders without safety caps installed.

e. All oxygen cylinders with leaky valves or safety fuse plugs and discs should be set aside and marked for the attention of the supplier. Do not tamper with or attempt to repair oxygen cylinder valves. Do not use a hammer or wrench to open valves.

WARNING

Oxygen must not be substituted for compressed air in pneumatic tools nor used to blow out pipe lines, test radiators, purge tanks or containers, or to ”dust” clothing or work.

f. Before attaching the pressure regulators, open each oxygen cylinder valve for an instant to blow dirt out of the nozzles. Wipe off the connection seat with a clean cloth. Do not stand in front of valves when opening them.

g. The cylinder valve shall be opened slowly to prevent damage to the regulator high pressure gage mechanism. Ensure that the regulator tension screw is released before opening the valve. When not in use the cylinder valve should be closed, and the protecting caps screwed on to prevent damage to the valve.

h. When the oxygen cylinder is in use, the valve must be opened to the limit to prevent leakage around the valve stem.

i. Regulators shall always be used on oxygen cylinders to reduce the cylinder pressure to a low working pressure since the high cylinder pressure can burst the hose.

j. Oxygen regulators, hose, or other apparatus with similar equipment intended for other gases shall not be interchanged.

52. **HOSES.**

a. Hoses must not be allowed to come in contact with oil or grease. These will penetrate and deteriorate the rubber and constitute a hazard with oxygen.

b. Precautions.

c. Hoses must not be walked on nor run over.

d. Kinks and tangles shall be avoided.

e. Hoses must not be left where they can be tripped over since this could cause personal injury, damaged connections or upset cylinders.

f. No work shall be performed with hoses over the shoulder, around the leg(s) or tied to waist.

g. Hoses shall be protected from hot slag, flying sparks, and open flames.

h. Hose connections which do not fit shall never be forced. White lead, oil, grease, or other pipe fitting compounds for connections on hose, torch, or other equipment shall not be used. Hoses shall never be crimped to shut off gases.

i. Prior to use, inspect all hoses for damage. Hoses with abrasions or cracks shall be replaced. Do not use open flames to check for leaks in acetylene hoses. Examine all hoses periodically for leaks by immersing in water while under pressure. Do not use matches to check for leaks in acetylene hose. Repair leaks by cutting hose and inserting a brass splice. Do not use tape for mending. Replace hose if necessary.

j. Make sure hoses are securely attached to torches and regulators before using.

k. Do not use new or stored hose lengths without first blowing them out to eliminate talc or accumulated foreign matter which might otherwise enter and clog the torch parts.

53. **SAFETY PRECAUTIONS FOR ARC WELDING.**

a. ELECTRIC CIRCUITS. The electric current used in welding can cause severe shock or death. The precautions listed below should always be observed:

(1) Check the welding equipment to make certain that electrode connections and insulation on holders and cables are in good condition.

(2) Keep hands and body insulated from both the work and the metal electrode holder. Avoid standing on wet floors.

(3) Perform all welding operations within the rated capacity of the welding cables. Excessive heating will impair the insulation and damage the cable leads.

(4) Inspect the cables periodically for looseness at the joints, defects due to wear, or other damage. Defective or loose cables are a fire hazard. Defective electrode holders should be replaced and connections to the holder should be tightened.

(5) Welding generators should be located or shielded so that dust, water, or other foreign matter will not enter the electrical windings or the bearings.

(6) The presence of moisture (fog, rain, sweat) increase the risk of shock.

b. WELDING MACHINES

(1) Welding generating equipment powered by *internal combustion engines* and when used inside buildings or in confined areas the engine exhaust must be conducted to the outside atmosphere.

(2) *Welding generating equipment* shall be placarded as follows:

Warning - Keep 5 ft (1.5 m) (Horizontally)
Clear of Aircraft Engines,
Fuel Tank Areas and Vents

(Not applicable to Air Force)

(3) All welding equipment must be checked to ensure that the electrode connections and the insulation on holders and cables are in good condition. All checking should be done on dead circuits. All serious trouble should be investigated by a trained electrician.

(4) A motor-generator type of welding machine must have a power ground on the machine because stray current may cause a severe shock to the operator if he should contact the machine and a good ground.

(5) The polarity switch should not be operated while the machine is operating under welding current load. Consequent arcing at the switch will damage the contact surfaces, and the flash may burn the person operating the switch.

(6) The rotary switch should not be operated for current settings while the machine is operating under the welding current load; severe burning of the switch contact surface will result. Operate the rotary switch while the machine is idling.

(7) The power source must be turned off when leaving welding machine unattended.

(8) Well insulated electrode holders and cables shall be used. Dry protective covering on hands and body shall be worn.

(9) Partially used electrodes shall be removed from the holders when not in use and a place provided to hang up or lay down the holder where it will not come in contact with persons or conducting objects.

(10) The work clamp must be securely attached to the work before the welding operation is started.

54. **PROTECTIVE SCREENS.**

a. When welding is done near other personnel, screens should be used to protect the eyes from the arc or reflected glare. Refer to paragraph 16, **PROTECTIVE EQUIPMENT** for screen design and method of use.

b. In addition to using portable screens to protect other personnel, screens should be used, when necessary, to prevent drafts of air from interfering with the stability of the arc.

55. **SAFETY PRECAUTIONS FOR GAS SHIELDED ARC WELDING.**

a. Gas shielded arc welding processes have certain dangers associated with them. The hazards which are peculiar to or might be increased by gas shielded arc welding are gases, radiant energy, and metal fumes.

56. **PROTECTIVE MEASURES FOR GASES.**

a. GASES.

(1) Ozone. Ozone concentration increases with the type of electrodes used, amperage, extension of arc time, and increased shielding gas flow. If welding is carried out in confined spaces and poorly ventilated areas the ozone concentration may increase to harmful levels. The exposure level to ozone will be reduced by adherence of good welding practices and utilizing properly designed ventilation systems.

(2) Nitrogen Oxides. Natural ventilation may be sufficient to reduce the hazard of exposure to nitrogen oxides during welding operations provided all three ventilation criteria given in paragraph 21, **CONCENTRATION OF TOXIC SUBSTANCES** are satisfied. Nitrogen oxide concentrations will be very high when performing gas tungsten-arc cutting of stainless steel, using a 90 percent nitrogen - 10 percent argon mixture. In addition, high concentrations have been found during experimental use of nitrogen as a shield gas. Good industrial hygiene practices dictate that mechanical ventilation, as defined in paragraph 23, **VENTILATION FOR GENERAL WELDING AND CUTTING**, be used during welding or cutting of metals.

(3) Carbon Dioxide and Carbon Monoxide. Carbon dioxide is dissociated by the heat of the arc to form carbon monoxide. The hazard from inhalation of these gases will be minimal provided ventilation requirements as prescribed in paragraph 21, **CONCENTRATION OF TOXIC SUBSTANCES** are satisfied. However, where the welding fumes pass through the welder's breathing zone or where welding is performed in confined space, ventilation requirements as prescribed in paragraph 23, **VENTILATION FOR GENERAL WELDING AND CUTTING** shall be adhered to.

(4) Vapors of Chlorinated Solvents. Ultraviolet radiation from the welding or cutting arc can decompose the vapors of chlorinated hydrocarbons, to form highly toxic substances. Eye, nose, and throat irritation can result when the welder is exposed to these substances. Sources of the vapors can be wiping rags, vapor degreasers or open containers of the solvent. Since this decomposition can occur even at a considerable distance from the arc, the sources of the chlorinated solvents should be located so that no solvent vapor will reach the welding or cutting area.

b. RADIANT ENERGY.

(1) Electric arcs as well as gas flames produce ultraviolet and infrared rays that have a harmful effect on the eyes and skin under continued or repeated exposure. The usual effect of ultraviolet is to "sun-burn" the surface of the eye, which is painful and disabling but generally temporary.

(2) Ultraviolet radiation may also produce the same effects on the skin as severe sunburn. Production of ultra-violet radiation, hence the intensity, doubles when gas-shielded arc welding is performed instead of shielded metal arc.

(3) Infrared radiations have the effect of heating the tissue with which it comes in contact. If the heat is not sufficient to cause an ordinary thermal burn, the exposure is minimal.

c. METAL FUMES.

(1) The physiological response from exposure to metal fumes will vary depending upon the metal being welded.

(2) Ventilation and personal protective equipment requirements as prescribed in paragraph 21, **CONCENTRATION OF TOXIC SUBSTANCES** shall be employed to prevent hazardous exposure.

57. **SAFETY PRECAUTIONS FOR WELDING AND CUTTING POLYURETHANE FOAM FILLED ASSEMBLIES.**

a. Welding or cutting parts filled with polyurethane foam shall be accomplished only after all appropriate safety measures have been complied with.

58. **FIRE PROTECTION [Air Force shall refer to AFOSH 127-56].**

a. Aircraft hangars in which welding is performed shall be equipped with the fixed fire protection equipment specified in *Chapters 12 and 13 of NFPA 409*, Standard on Aircraft Hangars. No welding shall be permitted if such fixed fire protection equipment is inoperative for any reason. Hangars are equipped with automatic fire detection systems. This must be taken into consideration, especially with regard to type of system where welding is to be performed. Care must be taken to avoid the causing of false alarms or accidental actuation.

b. The specific location where the welding is being done shall be roped off or otherwise segregated by physical barriers to prevent unintended entry into the welding area. Placards reading "**Welding Operations in Progress**" shall be prominently displayed.

c. Screens shall be placed around the welding operation.

d. Good housekeeping shall prevail in the welding area. Floor drains in the area of a welding operation shall be checked periodically to determine that no flammable or combustible liquids or vapors are present.

e. A fire extinguisher having a minimum rating of 20 B (minimum capacity 15 lb (6.8 kg) of agent) shall be positioned in the immediate area of the welding operation ready for instant use. As a backup for the portable extinguisher, a wheeled extinguisher having a minimum rating of 80 B (minimum capacity 125 lb (58 kg) of agent) shall be readily available. A qualified fire watcher (see NFPA 51B, Standard for Fire Prevention in Use of Cutting and Welding Processes, for training of fire watcher) shall be assigned to operate this equipment and shall monitor the entire welding operation. In the event a hazardous condition develops, he shall have the authority to stop the welding operation.

59. **FIRE WATCHER ASSIGNMENT.**

a. Fire watchers shall be assigned by the individual responsible for authorizing cutting and welding whenever it is performed in locations where other than a minor fire might develop, or any of the following conditions exist:

(1) Appreciable combustible material in building construction or contents is closer than 35 ft. (11 m) to the point of operation.

(2) Appreciable combustibles are more than 35 ft. (11 m) away but are easily ignited by sparks.

(3) Wall or floor openings within a 35 ft. (11 m) radius exposing combustible material in adjacent areas including concealed spaces in walls or floors.

(4) Combustible materials are adjacent to the opposite side of metal partitions, walls, ceilings or roofs and are likely to be ignited by conduction or radiation.

60. **FIRE WATCHER RESPONSIBILITIES.**

a. Fire watchers shall have fire extinguishing equipment readily available and be trained in its use, including practice on test fires.

b. Fire watchers shall be familiar with facilities and procedures for sounding an alarm in the event of a fire.

c. Fire watchers shall watch for fires in all exposed areas, and try to extinguish them first only when obviously within the capacity of the equipment available, or otherwise sound the alarm immediately.

d. A fire watch shall be maintained for at least a half hour after completion of cutting or welding operations to detect and extinguish smoldering fires.

61. **BASIC PRECAUTIONS OUTLINED HEREIN SHOULD APPLY TO THE FOLLOWING OPERATIONS.**

a. Stress relieving of certain portions of the aircraft engines or structures by normalizing through the use of an oxyacetylene flame.

b. Silver brazing or soldering when required on certain electrical connections and fluid lines.

62. **SAFETY FOR ON-SUPPORT EQUIPMENT WELDING, CUTTING, AND BRAZING.**

a. Support equipment operations performed in hangars/outdoors shall conform to the requirements of this manual.

ORGANIZATIONAL, INTERMEDIATE AND DEPOT MAINTENANCE

WELDING TECHNOLOGY AND REPAIR INTRODUCTION

Reference Material

Aerospace Metals - General Data and Usage Factors ..... T.M. 43-0106
Army Publishing Program ..... AR 25-30
Catalog of Naval Training Courses ..... NAVEDTRA 10500
Engineering Series for Aircraft Repair Aerospace Metals – General Data And Usage Factors ..... NA 01-1A-9
Engineering Series for Aircraft Repair Aerospace Metals – General Data And Usage Factors ..... T.O. 1-1A-9
Hazardous Materials Information System (HMIS) ..... DOD 6050.5
Navy Aviation Maintenance Program (NAMP) ..... OPNAVINST 4790.2
Specification for Fusion Welding for Aerospace Applications ..... AWS D17.1
Specification for Resistance Welding for Aerospace Applications ..... AWS D17.2
Specification for Torch Brazing ..... AWS C3.4
Technical Order System ..... T.O. 00-5-1

Alphabetical Index

Subject **Page No.**

Description, Background Information 2
Metals Theory 3
Purpose 2
Scope 2
Warnings and Cautions Applicable to Hazardous Materials 3
Welding and Brazing Specifications 3
Welding Theory 3

Record of Applicable Technical Directives

None

NOTE

This Work Package contains GUIDANCE information to supplement higher order technical document or instructions.

1. **PURPOSE.**

a. This welding manual is intended to be used with aviation maintenance, repair and overhaul manuals.

b. This is a general series manual and is intended to be used in conjunction with specific maintenance/repair/overhaul manuals or engineering documents for aircraft, aircraft components and support equipment.

c. This manual ***does not apply*** to civil engineering, motor vehicle maintenance, or other support activities.

2. **SCOPE**.

a. This technical manual is published for use by personnel, at both Intermediate Level and Depot Level for welding and other metal joining operations in the manufacture and maintenance of material.

(1) All Intermediate and Depot level aircraft and support equipment welding shall be in accordance with data contained in this manual unless otherwise specified. When specific engineering drawings or overhaul instructions conflict with this manual the specific document shall apply.

(2) The responsibility for this manual resides with FRC-East, ISSC 4.3.4.1, Cherry Point, North Carolina. All activities using this manual should submit recommended changes, corrections, or deletions in accordance with procedures set forth by NAVY instruction OPNAVINST 4790.2 series, Air Force instruction T.O. 00-5-1, and Army Regulations 25-30.

3. **DESCRIPTION, BACKGROUND INFORMATION**.

a. This manual contains information organized into logical groups of information and further divided into specific or unique information within each group.

b. In general this manual will follow the outline listed below:

Work Package 001	Alphabetical Index
Work Package 002	Safety Requirements
Work Package 003	General Welding Information
Work Package 004	Welding and Cutting Equipment and Process
Work Package 005	Welder Qualification and Certification
Work Package 006	Preweld Requirements
Work Package 007	Weld Procedure and Details
Work Package 008	Post Weld Thermal Treatments
Work Package 009	Weld Visual Examination

c. As requirements change or more detailed information becomes available, the organization of the manual will accommodate those changes without disrupting the logical flow of the document.

NOTE

Refer to T.M. 43-0106/T.O. 1-1A-9/NA 01-1A-9 for further information regarding classification of weldable materials.

4. **WARNINGS AND CAUTIONS APPLICABLE TO HAZARDOUS MATERIALS.**

a. Warnings and cautions for hazardous materials listed in here are designed to apprise personnel of hazards associated with such items when they are exposed to them by actual use. Additional information related to hazardous materials are provided within each service's program manual and the DOD 6050.5 Hazardous Materials Information System (HMIS) series publications.

b. Consult your local safety and health staff concerning specific personnel protective requirements and appropriate handling and emergency procedures.

5. **WELDING THEORY.**

a. Welding is any metal joining process wherein coalescence is produced by heating the metal to suitable temperatures, with or without the application of pressure and with or without the use of filler metals.

b. Basic welding and torch brazing processes are described and illustrated in this manual.

c. Welding processes for these metals are varied and information contained in this manual covers theory and application of welding for many types of metals.

6. **METALS THEORY.**

a. Metals are divided into two classes, ferrous and nonferrous.

(1) Ferrous metals are those in the iron class and are magnetic in nature. These metals consist of iron, steel and alloys related to them.

(2) Nonferrous metals are metals that contain either none or very small amounts of ferrous metals and are generally divided into the aluminum, copper, magnesium, lead, and similar groups.

7. **WELDING AND BRAZING SPECIFICATIONS.**

a. Welding and Brazing specifications change with time for various reasons. Changes to specification, generally are transferred to the new specification with updated requirements, suggestions, or guidance.

b. Refer to Table 1 for a list of welding specifications which were replaced by later specifications when translating legacy requirements with the latest requirements.

c. All welders performance qualifications, welding procedures, inspection/acceptance criteria currently used today meet the requirements of the legacy specifications found on drawings.

d. Additional performance qualifications shall comply with the latest specifications.

Table 1. Legacy 1/ Welding and Brazing Specifications to Current Welding Specifications

Specification	Purpose	Replacement Specification	Purpose	Current Specification	Purpose
MIL-T-5021	Qualification Requirements	MIL-STD-1595 MIL-STD-1595A AMS-STD-1595	Qualification Requirements	AWS D17.1	Qualifications for Aerospace Applications
MIL-W-8604 MIL-W-8611 MIL-W-18326	Welding Aluminum Alloys Welding Steel Alloys Welding Magnesium Alloys	MIL-STD-2219 AMS-STD-2219	Combined Welding Material Requirements	AWS D17.1 AMS-STD-2219	Welding Requirements for Aerospace Applications
MIL-W-6858	Resistance Welding	--	--	D17.2	RW Requirements
MIL-B-7883	Brazing Requirements	--	--	AWS C3.4	Brazing
MIL-STD-278	Cancelled. Not applicable to this General Series Manual				
MIL-STD-248					

1/ Specifications read left (oldest) to right (latest).

ORGANIZATIONAL, INTERMEDIATE AND DEPOT MAINTENANCE GLOSSARY

Reference Material

Standard Symbols for Welding, Brazing, and Nondestructive Examination ..... AWS A2.4
Standard Welding Terms and Definitions Including Terms for Adhesive Bonding, Brazing, Soldering, Thermal Cutting, and Thermal Spraying ..... AWS A3.0

Alphabetical Index

Subject Page No.

Glossary 2
Welding Terms and Definitions 2

Record of Applicable Technical Directives

None

NOTE

This Work Package contains GUIDANCE information to supplement higher order technical document or instructions.

1. **GLOSSARY.**

a. General. This glossary of welding terms has been prepared to acquaint welding personnel with nomenclatures and definitions of common terms related to welding and allied processes, methods, techniques, and applications.

b. Scope. The welding terms listed are those used to describe and define the standard nomenclatures and language used in this manual and based on American Welding Society (AWS), Standard Welding Terms, and Definitions, A3.0-2001 standard. This glossary is a very important part of the manual and should be carefully studied and regularly referred to for better understanding of common welding terms and definitions. Terms and nomenclatures listed herein are grouped in alphabetical order.

2. WELDING TERMS AND DEFINITIONS.

A

ACTUAL THROAT: The shortest distance between the weld root and the face of a fillet weld.

AIR CARBON ARC CUTTING (CAC-A): A carbon arc cutting process variation that removes molten metal with a jet of air.

ARC BLOW: The deflection of an arc from its normal path due to magnetic forces.

ARC CUTTING (AC): A group of thermal cutting processes that severs or removes metal by melting with the heat of an arc between an electrode and the workpiece.

ARC CUTTING GUN: A device used to transfer current to a continuously fed cutting electrode, guide the electrode, and direct the electrode

ARC FORCE: The axial force developed by an arc plasma.

ARC GOUGING: Thermal gouging that uses an arc cutting process variation to form a bevel or groove.

ARC SEAM WELD: A seam weld made by an arc welding process.

ARC SPOT WELD: A spot weld made by an arc welding process.

ARC STRIKE: A discontinuity resulting from an arc, consisting of any localized remelted metal, heat-affected metal, or change in the surface profile of any metal object.

ARC WELDING (AW): A group of welding processes that produces coalescence of workpieces by heating them with an arc. The processes are used with or without the application of pressure and with or without filler metal.

ARC WELDING ELECTRODE: A component of the welding circuit through which current is conducted and that terminates at the arc.

ARC WELDING GUN: A device used to transfer current to a continuously fed consumable electrode, guide the electrode, and direct the shielding gas.

AS-WELDED: adj. pertaining to the condition of weld metal, welded joints, and weldments after welding, but prior to any subsequent thermal, mechanical, or chemical treatments.

AUTOGENOUS WELD: A fusion weld made without filler metal.

AUTOMATIC WELDING: Welding with equipment that requires only occasional or no observation of the welding, and no manual adjustment of the equipment controls.

B

BACK BEAD: A weld bead resulting from a back weld pass.

BACKFIRE: The momentary recession of the flame into the welding tip or cutting tip followed by immediate reappearance or complete extinction of the flame, accompanied by a loud report.

BACKGOUGING: The removal of weld metal and base metal from the weld root side of a welded joint to facilitate complete fusion and complete joint penetration upon subsequent welding from that side.

BACKHAND WELDING: A welding technique in which the welding torch or gun is directed opposite to the progress of welding.

BACKING: A material or device placed against the back side of the joint adjacent to the joint root, or at both sides of a joint in electroslag and electrogas welding, to support and shield molten weld metal. The material may be partially fused or remain unfused during welding and may be either metal or nonmetal.

BACKING BEAD: A weld bead resulting from a backing weld pass.

BACKING FILLER METAL: A nonstandard term for consumable insert.

BACKING GAS: Backing in the form of a shielding gas employed primarily to provide a protective atmosphere.

BACKING RING: Backing in the form of a ring, generally used in the welding of pipe.

BACKING WELD PASS: A weld pass resulting in a backing weld.

BACKING WELD: Backing in the form of a weld.

BACKSTEP SEQUENCE: A longitudinal sequence in which weld passes are made in the direction opposite to the progress of welding.

BACK WELD: A weld made at the back of a single groove weld.

BALLING UP: The formation of globules of molten filler metal or flux due to lack of wetting of the base metal.

BASE MATERIAL: The material that is welded, brazed, soldered or cut. *SEE ALSO BASE METAL AND SUBSTRATE.*

BASE METAL: The metal or alloy that is welded, brazed, soldered, or cut. *SEE ALSO BASE MATERIAL AND SUBSTRATE.*

BEAD WELD: A nonstandard term for surfacing weld.

BEVEL: An angular edge shape.

BEVEL ANGLE: The angle between the bevel of a joint member and a plane perpendicular to the surface of the member.

BEVEL GROOVE WELD: A type of groove weld.

BLACKSMITH WELDING: A nonstandard term when used for forge welding.

BLOCK SEQUENCE: A combined longitudinal and cross-sectional sequence for a continuous multiple-pass weld in which separated increments are completely or partially welded before intervening increments are welded.

BLOWHOLE: A nonstandard term when used for porosity.

BOTTLE: A nonstandard term when used for gas cylinder.

BOXING: The operation of continuing a fillet weld around a corner of a member as an extension of the principal weld.

BRAZE: Joining as a result of heating an assembly to the brazing temperature using a filler metal having a liquidus above 450°C (840°F) and below the solidus of the base metal. The filler metal is distributed between the closely fitted faying surfaces of the joint by capillary action.

BRAZE INTERFACE: The interface between braze metal and base metal in a brazed joint.

BRAZEMENT: An assembly whose component parts are joined by brazing.

BRAZER: One who performs manual or semiautomatic brazing.

BRAZE WELDING (BW): A joining process that uses a filler metal with a liquidus above 450°C (840°F) and below the solidus of the base metal. The base metal is not melted. Unlike brazing, in braze welding the filler metal is not distributed in the joint by capillary action.

BRAZING (B): A group of joining processes that produces coalescence of materials by heating them to the brazing temperature in the presence of a filler metal having a liquidus above 450°C (840°F) and below the solidus of the base metal. The filler metal is distributed between the closely fitted faying surfaces of the joint by capillary action.

BRAZING ALLOY: A nonstandard term for brazing filler metal.

BRAZING FILLER METAL: The metal or alloy used as a filler metal in brazing, which has a liquidus above 450°C (840°F) and below the solidus of the base metal.

BRAZING OPERATOR: One who operates automatic or mechanized brazing equipment.

BRAZING TEMPERATURE: The temperature to which the base metal is heated to enable the filler metal to wet the base metal and form a brazed joint.

BRITTLE NUGGET: A nonstandard term used to describe a faying plane failure in a resistance weld peel test.

BRONZE WELDING: A nonstandard term when used for braze welding.

BUILDUP: A surfacing variation in which surfacing metal is deposited to achieve the required dimensions. *SEE ALSO BUTTERING*.

BURNER: A nonstandard term for oxyfuel gas cutter.

BURNING: A nonstandard term for oxyfuel gas cutting.

BURN-THROUGH: A nonstandard term when used for excessive melt-through or a hole through a root bead.

BURN-THROUGH WELD: A nonstandard term for an arc seam weld or arc spot weld.

BUTTERING: A surfacing variation that deposits surfacing metal on one or more surfaces to provide metallurgically compatible weld metal for the subsequent completion of the weld. *SEE ALSO BUILDUP.*

BUTT JOINT: A joint between two members aligned approximately in the same plane.

BUTTON: That part of a weld, including all or part of the nugget that tears out in the destructive testing of spot, seam or projection welded specimens.

BUTT WELD: A nonstandard term for a weld in a butt joint.

C

CARBON-ARC CUTTING (CAC): An arc cutting process that uses a carbon electrode. *SEE ALSO AIR CARBON ARC CUTTING.*

CARBONIZING FLAME: A nonstandard term for carburizing flame.

CARBURIZING FLAME: A reducing oxyfuel gas flame in which there is an excess of fuel gas, resulting in a carbon-rich zone extending around and beyond the cone.

CAULK WELD: A nonstandard term for seal weld.

CHAIN INTERMITTENT WELD: An intermittent weld on both sides of a joint in which the weld increments on one side are approximately opposite those on the other side.

CHILL RING: A nonstandard term when used for backing ring.

CLAD BRAZING SHEET: A metal sheet on which one or both sides are clad with brazing filler metal.

CONVEXITY: The maximum distance from the face of a convex fillet weld perpendicular to a line joining the weld toes.

CONVEX ROOT SURFACE: The configuration of a groove weld exhibiting root reinforcement at the root surface.

COALESCENCE: The growing together or growth into one body of the materials being welded.

COATED ELECTRODE: A nonstandard term for covered electrode.

COEXTRUSION WELDING (CEW): A solid-state welding process that produces a weld by heating to the welding temperature and forcing the workpieces through an extrusion die.

COLD CRACK: A crack which develops after solidification is complete.

COLD SOLDERED JOINT: A joint with incomplete coalescence caused by insufficient application of heat to the base metal during soldering.

COLD WELDING (CW): A solid-state welding process in which pressure is used to produce a weld at room temperature with substantial deformation at the weld. *SEE ALSO DIFFUSION WELDING, FORGE WELDING AND HOT PRESSURE WELDING.*

COMPLETE FUSION: Fusion over the entire fusion faces and between all adjoining weld beads.

COMPLETE JOINT PENETRATION (CJP): A groove weld condition in which weld metal extends through the joint thickness.

COMPLETE JOINT PENETRATION WELD: A groove weld in which weld metal extends through the joint thickness.

CONCAVE FILLET WELD: A fillet weld having a concave face.

CONCAVE ROOT SURFACE: The configuration of a groove weld exhibiting underfill at the root surface.

CONCAVITY: The maximum distance from the face of a concave fillet weld perpendicular to a line joining the weld toes.

CONE: The conical part of an oxyfuel gas flame to the tip orifice.

CONSTANT CURRENT POWER SOURCE: An arc welding power source with a volt-ampere relationship yielding a small welding current change from a large arc voltage change.

CONSTANT VOLTAGE POWER SOURCE: An arc welding power source with a volt-ampere relationship yielding a large welding current change from a small arc voltage change.

CONSTRICTED ARC: A plasma arc column that is shaped by the constricting orifice in the nozzle of the plasma arc torch or plasma spraying gun.

CONSTRICTING NOZZLE: A device at the exit end of a plasma arc torch or plasma spraying gun, containing the constricting orifice.

CONSTRICTING ORIFICE: The hole in the constricting nozzle of the plasma arc torch or plasma spraying gun through which the arc plasma passes.

CONSUMABLE INSERT: Filler metal that is placed at the joint root before welding, and is intended to be completely fused into the joint root to become part of the weld.

CONTACT RESISTANCE, RESISTANCE WELDING: Resistance to the flow of electric current between two workpieces or an electrode and a workpiece.

CONTACT TIP: A tubular component of an arc welding gun that delivers welding current to, and guides, a continuous electrode.

CONTACT TUBE: A nonstandard term when used for contact tip.

CONVEX FILLET WELD: A fillet weld having a convex weld face.

COPPER BRAZING: A nonstandard term when used for brazing with a copper filler metal.

CORNER-FLANGE WELD: A nonstandard term when used for an edge weld in a flanged corner joint.

CORNER JOINT: A joint between two members located approximately at right angles to each other in the form of an L.

CORONA, RESISTANCE WELDING: The area sometimes surrounding the nugget of a spot weld at the faying surface which provides a degree of solid-state welding.

CORRECTIVE LENS: A lens ground to the wearer's individual corrective prescription.

CO_2 WELDING: A nonstandard term when used for gas metal arc welding with carbon dioxide shielding gas.

COVERED ELECTRODE: A composite filler metal electrode consisting of a core of a bare electrode or metal cored electrode to which a covering sufficient to provide a slag layer on the weld metal has been applied. The covering may contain materials providing such functions as shielding from the atmosphere, deoxidation, and arc stabilization, and can serve as a source of metallic additions to the weld.

CRACK: A fracture type discontinuity characterized by a sharp tip and high ratio of length and width to opening displacement.

CRATER: A depression at the termination of a weld bead.

CUTTING ATTACHMENT: A device for converting an oxyfuel gas welding torch into an oxyfuel cutting torch.

CUTTING TIP: The part of an oxyfuel cutting torch from which the gases issue.

CUTTING TORCH (ARC): A device used in air carbon arc cutting, gas tungsten arc cutting, and plasma arc cutting to control the position of the electrode, to transfer current, and to control the flow of gases.

CUTTING TORCH (OXYFUEL GAS): A device used for directing the preheating flame produced by the controlled combustion of fuel gases and to direct and control the cutting oxygen.

CYLINDER MANIFOLD: A header for interconnection of multiple gas sources with distribution points.

D

DEFECT: A discontinuity or discontinuities that by nature or accumulated effect (for example, total crack length) render a part or product unable to meet minimum applicable acceptance standards or specification. This term designates rejectability. *SEE ALSO DISCONTINUITY AND FLAW.*

DEPOSITED METAL, BRAZING, SOLDERING, AND WELDING: Filler metal that has been added during brazing, soldering, or welding.

DEPOSITION EFFICIENCY (ARC WELDING): The ratio of the weight of deposited metal to the net weight of filler metal consumed, exclusive of stubs.

DEPOSITION SEQUENCE: A nonstandard term when used for weld pass sequence.

DEPTH OF FUSION: The distance that fusion extends into the base metal or previous bead from the surface melted during welding.

DIFFUSION BRAZING (DFB): A brazing process that produces coalescence of metals by heating them to brazing temperature and by using a filler metal or an in situ liquid phase. The filler metal may be distributed by capillary attraction or may be placed or formed at the faying surfaces. The filler metal is diffused with the base metal to the extent that the joint properties have been changed to approach those of the base metal. Pressure may or may not be applied. *SEE ALSO COLD WELDING, FORGE WELDING AND HOT PRESSURE WELDING.*

DIFFUSION WELDING (DFW): A solid-state welding process that produces a weld by the application of pressure at elevated temperature with no macroscopic deformation or relative motion of the workpieces. A solid filler metal may be inserted between the faying surfaces. *SEE ALSO COLD WELDING, FORGE WELDING AND HOT PRESSURE WELDING.*

DILUTION: The change in chemical composition of a welding filler metal caused by the admixture of the base metal or previous weld metal in the weld bead. It is measured by the percentage of base metal or previous weld metal in the weld bead.

DIP BRAZING (DB): A brazing process that uses heat from a molten chemical or metal bath. When a molten chemical is used, the bath may act as a flux. When a molten metal is used, the bath provides the filler metal.

DIP FEED (*gas tungsten arc welding, oxyfuel gas welding and plasma arc welding*): A process variation in which filler metal is intermittently fed into the leading edge of the weld pool.

DIRECT CURRENT ELECTRODE NEGATIVE (DCEN): The arrangement of direct current arc welding leads in which the electrode is the negative pole and workpiece is the positive pole of the welding arc.

DIRECT CURRENT ELECTRODE POSITIVE (DCEP): The arrangement of direct current arc welding leads in which the electrode is the positive pole and the workpiece is the negative pole of the welding arc.

DIRECT CURRENT REVERSE POLARITY: A nonstandard term for direct current electrode positive.

DIRECT CURRENT STRAIGHT POLARITY: A nonstandard term for direct current electrode negative.

DISCONTINUITY: An interruption of the typical structure of a material, such as a lack of homogeneity in its mechanical, metallurgical, or physical characteristics. A discontinuity is not necessarily a defect. *SEE ALSO DEFECT AND FLAW.*

DOWNHAND: A nonstandard term for flat welding position.

DROP-THROUGH: An undesirable sagging or surface irregularity, usually encountered when brazing or welding near the solidus of the base metal, caused by overheating with rapid diffusion or alloying between the filler metal and the base metal.

DUTY CYCLE: The percentage of time during a specified test period that a power source or its accessories can be operated at rated output without overheating.

E

EDGE-FLANGE WELD: A nonstandard term for an edge weld in a flanged butt joint.

EDGE JOINT: A joint between the edges of two or more parallel or nearly parallel members.

EDGE PREPARATION: The preparation of the edges of the joint members, by cutting, cleaning, plating, or other means.

EDGE WELD: A weld in an edge joint, a flanged butt joint or a flanged corner joint in which the full thickness of the members are fused.

EDGE WELD SIZE: The weld metal thickness measured from the weld root.

EFFECTIVE THROAT: The minimum distance from the fillet weld face, minus any convexity, and the weld root. In the case of a fillet weld combined with a groove weld, the weld root of the groove weld shall be used.

ELECTRODE: A component of the electrical circuit that terminates at the arc, molten conductive slag, or base metal.

ELECTRODE EXTENSION (*gas metal arc welding*): The length of electrode extending beyond the end of the contact tip.

ELECTRODE FORCE (*resistance welding*): The force applied by the electrodes to the workpieces in making spot, seam, or projection welds.

ELECTRODE HOLDER: A device used for mechanically holding and conducting current to an electrode during welding or cutting.

ELECTRODE INDENTATION (*resistance welding*)**:** The depression formed on the surface of workpieces by electrodes.

ELECTRODE LEAD: The electrical conductor between the source of arc welding current and the electrode holder.

ELONGATED POROSITY: A form of porosity having a length greater than its width that lies approximately parallel to the weld axis.

EXHAUST BOOTH: A mechanically ventilated, semi-enclosed area in which airflow across the work area is used to remove fumes, gases, and solid particles.

EXPULSION: The forceful ejection of molten metal from a resistance spot, seam, or projection weld usually at the faying surface.

F

FACE REINFORCEMENT: Weld reinforcement on the side of the joint from which welding was done.

FACE SHIELD: A device positioned in front of the eyes and over all or a portion of the face to protect the eyes and face.

FAYING SURFACE: The mating surface of a member that is in contact with or in close proximity to another member to which it is to be joined.

FERRITE NUMBER (FN): An arbitrary, standardized value designating the ferrite content of an austenitic or duplex ferritic-austenitic stainless steel weld metal based on its magnetic properties. The term is always a proper noun and is always capitalized. Ferrite Number should not be confused with percent ferrite; the two are not equivalent.

FILLER MATERIAL: The material to be added in making a brazed, soldered or welded joint.

FILLER METAL: The metal or alloy to be added in making a brazed, soldered or welded joint.

FILLER WIRE: A nonstandard term for welding wire.

FILLET WELD: A weld of approximately triangular cross section joining two surfaces approximately at right angles to each other in a lap joint, T-joint, or corner joint.

FILLET WELD BREAK TEST: A test in which the specimen is loaded so that the weld root is in tension.

FILLET WELD LEG: The distance from the joint root to the toe of the fillet weld.

FILLET WELD SIZE: For equal leg fillet welds, the leg lengths of the largest isosceles right triangle that can be inscribed within the fillet weld cross section. For unequal leg fillet welds, the leg lengths of the largest right triangle that can be inscribed within the fillet weld cross section.

FILLET WELD THROAT: *SEE ALSO ACTUAL THROAT, EFFECTIVE THROAT, AND THEORETICAL THROAT.*

FISHEYE: A discontinuity, attributed to the presence of hydrogen in the weld, observed on the fracture surface of a weld in steel that consists of a small pore or inclusion surrounded by an approximately round, bright area.

FIT: The act of bringing together the workpiece(s) in preparation for welding.

FITUP: The resultant condition of the workpiece(s) that have been brought together for welding.

5F: A welding test position designation for a circumferential fillet weld applied to a joint in pipe, with its axis approximately horizontal, in which the weld is made in the horizontal, vertical, and overhead welding positions. The pipe remains fixed until the welding of the joint is complete.

5G: A welding test position designation for a circumferential groove weld applied to a joint in a pipe with its axis horizontal, in which the weld is made in the flat, vertical, and overhead welding positions. The pipe remains fixed until the welding of the joint is complete.

FIXTURE: A device designed to hold and maintain parts in proper relation to each other.

FLAME CUTTING: A nonstandard term for oxygen cutting.

FLAME PROPAGATION RATE: The speed at which a flame travels through a mixture of gases.

FLANGE WELD: A nonstandard term for weld in a flanged joint.

FLARE-BEVEL-GROOVE WELD: A weld in the groove formed between a joint member with a curved surface and another with a planar surface.

FLARE-V-GROOVE WELD: A weld in a groove formed by two members with curved surfaces.

FLASH: Material that is expelled from a flash weld prior to the upset portion of the welding cycle.

FLASHBACK: A recession of the flame into or back of the mixing chamber of the oxyfuel gas torch or flame spraying gun.

FLASHBACK ARRESTER: A device to limit damage from a flashback by preventing propagation of the flame front beyond the location of the arrester.

FLASH BUTT WELDING: A nonstandard term for flash welding.

FLASH WELDING (FW): A resistance welding process that produces a weld at the faying surfaces of a butt joint by a flashing action and by the application of pressure after heating is substantially completed. The flashing action, caused by the very high current densities at small contact points between the workpieces, forcibly expels the material from the joint as the workpieces are slowly moved together. The weld is completed by a rapid upsetting of the workpieces.

FLAT POSITION: *SEE ALSO FLAT WELDING POSITION.*

FLAT WELDING POSITION: The welding position used to weld from the upper side of the joint at a point where the weld axis is approximately horizontal, and the weld face lies in an approximately horizontal plane.

FLAW: An undesirable discontinuity. *SEE ALSO DEFECT.*

FLUX: A material used to hinder or prevent the formation of oxides and other undesirable substances in molten metal and on solid metal surfaces, and to dissolve or otherwise facilitate the removal of such substances.

FLUX CORED ARC WELDING (FCAW): An arc welding process that uses an arc between a continuous filler metal electrode and the weld pool. The process is used with shielding gas from a flux contained within the tubular electrode, with or without additional shielding from an externally supplied gas, and without the application of pressure. *SEE ALSO FLUX CORED ELECTRODE.*

FLUX CORED ELECTRODE: A composite tubular filler metal electrode consisting of a metal sheath and a core of various powdered materials, producing an extensive slag cover on the face of a weld bead.

FOREHAND WELDING: A welding technique in which the welding torch or gun is directed toward the progress of welding.

FORGE WELDING (FOW): A solid-state welding process that produces coalescence of metals by heating them in air in a forge and by applying pressure or blows sufficient to cause permanent deformation at the interface. *SEE ALSO COLD WELDING, DIFFUSION WELDING.*

4F, plate: A welding test position designation for a linear fillet weld applied to a joint in which the weld is made in the overhead welding position.

4F, pipe: A welding test position designation for a circumferential fillet weld applied to a joint in pipe, with its axis vertical, in which the weld is made in the overhead welding position.

4G: A welding test position designation for a linear groove weld applied to a joint in which the weld is made in the overhead welding position.

FUEL GAS: A gas such as acetylene, natural gas, hydrogen, propane, stabilized methylacetylene propadiene (MAPP), and other fuels normally used with oxygen in one of the oxyfuel processes and for heating.

FURNACE BRAZING (FB): A brazing process in which the workpieces are placed in a furnace and heated to the brazing temperature.

FUSION (*fusion welding*): The melting together of filler metal and base metal, or of base metal only, to produce a weld. *SEE ALSO DEPTH OF FUSION.*

FUSION FACE: A surface of the base metal that has been melted during welding.

FUSION WELDING: Any welding process that used fusion of the base metal to make the weld.

FUSION ZONE: The area of base metal melted as determined on the cross-section of a weld.

G

GAP: A nonstandard term when used for arc length, joint clearance, and root opening.

GAS BRAZING: A nonstandard term for torch brazing.

GAS CUP: A nonstandard term for gas nozzle.

GAS CUTTER: A nonstandard term for oxygen cutter.

GAS CUTTING: A nonstandard term for oxygen cutting.

GAS CYLINDER: A portable container used for transportation and storage of a compressed gas.

GAS GOUGING: A nonstandard term for oxygen gouging.

GAS LENS: One or more fine mesh screens located in the gas nozzle to produce a stable stream of shielding gas. This device is primarily used for gas tungsten arc welding.

GAS METAL-ARC WELDING (*GMAW*): An arc welding process that uses an arc between a continuous filler metal electrode and the weld pool. The process is used with shielding from an externally supplied gas and without the application of pressure.

GAS NOZZLE: A device at the exit end of the torch or gun that directs shielding gas.

GAS POCKET: A nonstandard term for porosity.

GAS REGULATOR: A device for controlling the delivery of gas at some substantially constant pressure

GAS SHIELDED ARC WELDING: A general term used to describe flux cored arc welding (when gas shielding is employed), gas metal arc welding and gas tungsten arc welding.

GAS TORCH: A nonstandard term when used for cutting torch and welding torch.

GAS TUNGSTEN-ARC WELDING (*GTAW*): An arc welding process that uses an arc between a tungsten electrode (nonconsumable) and the weld pool. The process is used with shielding gas and without the application of pressure.

GAS TUNGSTEN ARC WELDING TORCH: A device used to transfer current to a fixed welding electrode, position the electrode, and direct the flow of shielding gas.

GAS WELDING: A nonstandard term for oxyfuel gas welding.

GLOBULAR TRANSFER (*gas metal arc welding*): The transfer of molten metal in large drops from a consumable electrode across the arc. *SEE ALSO SHORT CIRCUITING TRANSFER AND SPRAY TRANSFER.*

GOGGLES: Protective glasses equipped with filter plates set in a frame that fits snugly against the face and used primarily with oxyfuel gas processes.

GOUGING: *SEE ALSO THERMAL GOUGING.*

GROOVE ANGLE: The included angle between the groove faces of a weld groove.

GROOVE FACE: Any surface in a weld groove prior to welding.

GROOVE RADIUS: A nonstandard term when used for bevel radius.

GROOVE WELD: A weld in a weld groove on a workpiece surface, between workpiece edges, between workpiece surfaces, or between workpiece edges and surfaces.

GROOVE WELD SIZE: The joint penetration of a groove weld.

GROUND CLAMP: A nonstandard and incorrect term for workpiece connection.

GROUND CONNECTION: An electrical connection of the welding machine frame to the earth for safety. *SEE ALSO WORKPIECE CONNECTION AND WORKPIECE LEAD.*

GROUND LEAD: A nonstandard and incorrect term for workpiece lead.

H

HAMMER WELDING: A nonstandard term for cold welding and forge welding.

HAND SHIELD: A protective device used in arc cutting, arc welding and thermal spraying, for shielding the eyes, face, and neck. It is equipped with a filter plate and is designed to be held by hand.

HEAT-AFFECTED ZONE (HAZ**):** The portion of base metal whose mechanical properties or microstructure have been altered by the heat of welding, brazing, soldering, or thermal cutting.

HEAT-AFFECTED ZONE CRACK: A crack occurring in the heat-affected zone.

HELMET: *SEE WELDING HELMET.*

HOOD: A nonstandard term for welding helmet.

HORIZONTAL FIXED POSITION (*PIPE WELDING*): A nonstandard term when used for multiple welding position and 5G.

HORIZONTAL ROLLED POSITION (*PIPE WELDING*): A nonstandard term when used for the flat welding position and 1G.

HORIZONTAL WELDING POSITION (*FILLET WELD*): The welding position in which the weld is on the upper side of an approximately horizontal surface and against an approximately vertical surface.

HORIZONTAL WELDING POSITION (*GROOVE WELD*): The welding position in which the weld face lies in an approximately vertical plane and the weld axis at the point of welding is approximately horizontal.

HOT CRACK: A crack formed at temperatures near the completion of solidification.

I

IMPULSE (RESISTANCE WELDING): A group of pulses occurring on a regular frequency separated only by an interpulse time.

INCLINED POSITION: A nonstandard term when used for the multiple welding position and 6G.

INCLINED POSITION (*WITH RESTRICTION RING*): A nonstandard term when used for the multiple welding position and 6GR.

INCLUDED ANGLE: A nonstandard term for groove angle.

INCLUSION: Entrapped foreign solid material, such as slag, flux, tungsten, or oxide.

INCOMPLETE FUSION (IF): A weld discontinuity in which fusion did not occur between weld metal and fusion faces or adjoining weld beads. *SEE ALSO COMPLETE FUSION.*

INCOMPLETE JOINT PENETRATION (IJP): A joint root condition in a groove weld in which weld metal does not extend through the joint thickness. *SEE ALSO COMPLETE JOINT PENETRATION, COMPLETE JOINT PENETRATION WELD, JOINT PENETRATION, AND PARTIAL JOINT PENETRATION WELD.*

INDUCTION BRAZING (IB): A brazing process that uses heat from the resistance of the workpieces to induced electric current.

INERT GAS: A gas that normally does not combine chemically with materials. *SEE ALSO PROTECTIVE ATMOSPHERE.*

INERT GAS METAL ARC WELDING: A nonstandard term for gas metal arc welding.

INERT GAS TUNGSTEN ARC WELDING: A nonstandard term for gas tungsten arc welding.

INTERPASS TEMPERATURE (*welding*): In a multipass weld, the temperature of the weld area between weld passes.

J

JOINT: The junction of members or the edges of members that are to be joined or have been joined.

JOINT CLEARANCE (*brazing and soldering*): The distance between the faying surfaces of a joint.

JOINT DESIGN: The shape, dimensions, and configuration of the joint.

JOINT EFFICIENCY: The ratio of the strength of a joint to the strength of the base metal, expressed in percent.

JOINT GEOMETRY: The shape, dimensions and configuration of a joint prior to welding.

JOINT PENETRATION: The distance the weld metal extends from the weld face into a joint, exclusive of weld reinforcement. *SEE ALSO GROOVE WELD SIZE.*

JOINT ROOT: That portion of a joint to be welded where the members approach closest to each other. In cross section, the joint root may be either a point, a line, or an area.

JOINT TYPE: A weld joint classification based on the five basic arrangement of the component parts such as butt joint, corner joint, edge joint, lap joint and T-joint.

K

KERF: The gap produced by a cutting process.

L

LAMELLAR TEAR: A subsurface terrace and step-like crack in the base metal with a basic orientation parallel to the wrought surface caused by tensile stresses in the through-thickness direction of the base metals weakened by the presence of small dispersed, planar shaped, nonmetallic inclusions parallel to the metal surface.

LAND: A nonstandard term for root face.

LAP JOINT: A joint between two overlapping members in parallel planes.

LINEAR DISCONTINUITY: A discontinuity with a length that is substantially greater than its width.

LINEAR INDICATION: A test result in which a discontinuity in the material being tested is displayed as a linear or aligned array.

LINEAR POROSITY: A nonstandard term when used for aligned porosity.

LIQUATION: The separation of a low melting constituent of an alloy from the remaining constituents, usually apparent in alloys having a wide melting range.

LIQUIDUS: The lowest temperature at which a metal or an alloy is completely liquid.

LOCKED-UP STRESS: A nonstandard term for residual stress.

LONGITUDINAL CRACK: A crack with its major axis orientation approximately parallel to the weld axis.

M

MACHINE WELDING: A nonstandard term when used for mechanized welding.

MACROETCH TEST: A test in which a specimen is prepared with a fine finish, etched, and examined using no magnification or low magnification.

MACROEXAMINATION:. A metallographic examination in which a surface is examined using no magnification or low magnification.

MANUAL WELDING: Welding with the torch, gun, or electrode holder held and manipulated by hand. Accessory equipment, such as part motion devices and manually controlled filler material feeders may be used.

MECHANIZED WELDING: Welding with equipment that requires manual adjustment of the equipment controls in response to visual observation of the welding, with the torch, gun, or electrode holder held by a mechanical device.

MELTING RANGE: The temperature range between solidus and liquidus.

MELT-THROUGH: Visible root reinforcement produced in a joint welded from one side.

METAL CORED ELECTRODE: A composite tubular filler metal electrode consisting of a metal sheath and a core of various powdered materials, producing no more than slag islands on the face of a weld bead.

METAL ELECTRODE: A filler or nonfiller metal electrode used in arc welding and cutting that consists of a metal wire or rod that has been manufactured by any method and that is either bare or covered.

MIG WELDING: A nonstandard term for flux cored arc welding and gas arc welding.

MIXING CHAMBER: That part of a welding or cutting torch in which the gases are mixed for combustion.

MOLTEN WELD POOL: A nonstandard term for weld pool.

MULTIPORT NOZZLE (*PLASMA ARC WELDING AND CUTTING*): A constricting nozzle containing two or more orifices located in a configuration to achieve a degree of control over the arc shape.

N

NEUTRAL FLAME: An oxyfuel gas flame in which the portion used is neither oxidizing nor reducing. *SEE ALSO OXIDIZING FLAME AND REDUCING FLAME.*

NONCONSUMABLE ELECTRODE: An electrode that does not provide filler metal.

NONDESTRUCTIVE EVALUATION: A nonstandard term for nondestructive examination.

NONDESTRUCTIVE EXAMINATION (NDE): The act of determining the suitability of some material or component for its intended purpose using techniques that do not affect its serviceability.

NONDESTRUCTIVE INSPECTION: A nonstandard term when used for nondestructive examination.

NONDESTRUCTIVE TESTING: A nonstandard term when used for nondestructive examination.

NONTRANSFERRED ARC (*PLASMA ARC WELDING AND CUTTING*): An arc established between the electrode and the constricting nozzle of the plasma arc torch or thermal spraying gun. The workpiece is not in the electrical circuit. *SEE ALSO TRANSFERRED ARC.*

NOZZLE: *SEE CONSTRICTING NOZZLE AND GAS NOZZLE.*

NUGGET: The weld metal joint the workpieces in spot, roll spot, seam or projection welds.

NUGGET SIZE: A nonstandard term when used for resistance spot weld size.

O

1F, plate: A welding test position designation for a linear fillet weld applied to a joint in which the weld is made in the flat welding position.

1G, plate: A welding test position designation for a linear groove weld applied to a joint in which the weld is made in the flat welding position

OPEN CIRCUIT VOLTAGE: The voltage between the output terminals of the power source when no current is flowing to the torch or gun.

ORIFICE GAS (*PLASMA ARC WELDING AND CUTTING*): The gas that is directed into the plasma arc torch or thermal spraying gun to surround the electrode. It becomes ionized in the arc to form the arc plasma, and issues from the constricting orifice of the nozzle as a plasma jet.

OVERHEAD WELDING POSITION: The welding position in which welding is performed from the underside of the joint.

OVERLAP (*FUSION WELDING*): The protrusion of weld metal beyond the weld toes or weld root.

OVERLAP (*RESISTANCE SEAM WELDING*): The portion of the preceding weld nugget remelted by the succeeding weld.

OVERLAYING: A nonstandard term when used for surfacing.

OXIDIZING FLAME: An oxyfuel gas flame in which there is an excess of oxygen, resulting in an oxygen-rich zone extending around and beyond the cone. *SEE ALSO CARBURIZING FLAME, NEUTRAL FLAME, AND REDUCING FLAME*.

OXYACETYLENE CUTTING (OFC-A): An oxyfuel gas cutting process variation that uses acetylene as the fuel gas.

OXYACETYLENE WELDING (OAW): An oxyfuel gas welding process that uses acetylene as the fuel gas. The process is used without the application of pressure.

OXYFUEL GAS CUTTING (OFC): A group of oxygen cutting processes that uses heat from an oxyfuel gas flame. *SEE ALSO OXYACETYLENE CUTTING.*

OXYFUEL GAS CUTTING TORCH: A device used for directing the preheating flame produced by the controlled combustion of fuel gases and to direct and control the cutting oxygen.

OXYFUEL GAS WELDING (OFW): A group of welding processes that produces coalescence by heating materials with an oxyfuel gas flame or flames, with or without the application of pressure, and with or without the use of filler metal.

OXYFUEL GAS WELDING (OFW): A group of welding processes that produces coalescence of workpieces by heating them with an oxyfuel gas flame. The processes are used with or without the application of pressure and with or without filler metal.

OXYFUEL GAS WELDING TORCH: A device used in oxyfuel gas welding, torch brazing, and torch soldering for directing the heating flame produced by the controlled combustion of fuel gases.

OXYGEN CUTTING (OC): A group of thermal cutting processes that severs or removes metal by means of the chemical reaction between oxygen and the base metal at elevated temperature. The necessary temperature is maintained by the heat from an arc, an oxyfuel gas flame, or other source.

OXYGEN GOUGING (OG): Thermal gouging that uses an oxygen cutting process variation to form a bevel or groove.

P

PARALLEL WELDING: A resistance welding secondary circuit variation in which the secondary current is divided and conducted through the workpieces and electrodes in parallel electrical paths to simultaneously form multiple resistance spot, seam, or projection welds.

PARENT METAL: A nonstandard term for base metal or substrate.

PARTIAL JOINT PENETRATION: A groove weld in which incomplete joint penetration exists.

PENETRATION: A nonstandard term when used for depth of fusion, joint penetration, or root penetration.

PILOT ARC: A low current arc between the electrode and the constricting nozzle of the plasma arc torch to ionize the gas and facilitate the start of the welding arc.

PIPING POROSITY: A form of porosity having a length greater than its width that lies approximately perpendicular to the weld face.

PLASMA ARC CUTTING (PAC): An arc cutting process that uses a constricted arc and removes the molten metal with a high-velocity jet of ionized gas issuing from the constricting orifice.

PLASMA ARC CUTTING TORCH: A device used to transfer current to a fixed cutting electrode, position the electrode, and direct the flow of shielding gas and orifice gas.

PLASMA ARC WELDING (PAW): An arc welding process that uses a constricted arc between a nonconsumable electrode and the weld pool (transferred arc) or between the electrode and the constricting nozzle (nontransferred arc). Shielding is obtained from the ionized gas issuing from the torch, which may be supplemented by an auxiliary source of shielding gas. The process is used without the application of pressure.

PLASMA ARC WELDING TORCH: A device used to transfer current to a fixed welding electrode, position the electrode, and direct the flow of shielding gas and orifice gas.

PLENUM CHAMBER: The space between the electrode and the inside wall of the constricting nozzle of the plasma arc torch or thermal spraying gun.

PLUG WELD: A weld made in a circular hole in one member of a joint, fusing that member to another member. A fillet-welded hole is not to be construed as conforming to this definition.

POLARITY: *SEE DIRECT CURRENT ELECTRODE NEGATIVE AND DIRECT CURRENT ELECTRODE POSITIVE.*

POROSITY: Cavity-type discontinuities formed by gas entrapment during solidification.

POSTFLOW TIME: The time interval from current shut off to either shielding gas or cooling water shut off.

POSTHEATING: The application of heat to an assembly after brazing, soldering, thermal spraying, thermal cutting, or welding.

POWER SOURCE: An apparatus for supplying current and voltage suitable for welding, thermal cutting, or thermal spraying.

POWER SUPPLY: A nonstandard term when used for power source.

PREFLOW TIME: The time interval between start of shielding gas flow and arc starting.

PREHEAT: The heat applied to the base metal or substrate to attain and maintain preheat temperature.

PREHEAT CURRENT (*RESISTANCE WELDING*): An impulse or series of impulses that occur prior to and are separated from the welding current.

PREHEAT TEMPERATURE (*BRAZING AND SOLDERING*): The temperature of the base metal in the volume surrounding the point of brazing or soldering immediately before brazing or soldering is started.

PREHEAT TEMPERATURE (*WELDING*): The temperature of the base metal in the volume surrounding the point of welding immediately before welding is started. In a multipass weld, it is also the temperature immediately before the second and subsequent passes are started.

PRESSURE-CONTROLLED RESISTANCE WELDING (RW-PC): A resistance welding process variation in which a number of spot or projection welds are made with several electrodes functioning progressively under the control of a pressure-sequencing device.

PROCEDURE QUALIFICATION: The demonstration that welds made by a specific procedure can meet prescribed standards.

PROCESS: A grouping of basic operational elements used in brazing, soldering, thermal cutting, thermal spraying or welding.

PROTECTIVE ATMOSPHERE: A gas or vacuum envelope surrounding the workpieces, used to prevent or reduce the formation of oxides and other detrimental surface substances, and to facilitate their removal.

PUDDLE: A nonstandard term when used for weld pool.

PULSE (RESISTANCE WELDING): A current of controlled duration of either polarity through the welding circuit.

PULSED POWER WELDING: An arc welding process variation in which the welding power source is programmed to cycle between low and high power levels.

PURGE: The introduction of a gas to remove contaminants from a system or provide backing during welding.

PUSH ANGLE: The travel angle when the electrode is pointing in the direction of weld progression.

R

RANDOM INTERMITTENT WELDS: Intermittent welds on one or both sides of a joint in which the weld increments are made without regard to spacing.

REACTION STRESS: A stress that cannot exist in a member if the member is isolated as a free body without connection to other parts of the structure.

REDUCING ATMOSPHERE: A chemically active protective atmosphere that will reduce metal oxides to their metallic state at elevated temperature.

REDUCING FLAME: An oxyfuel gas flame with an excess of fuel gas. *SEE ALSO CARBURIZING FLAME, NEUTRAL FLAME, OXIDIZING FLAME, AND REDUCING ATMOSPHERE.*

RESIDUAL STRESS: Stress present in a joint member or material that is free of external forces or thermal gradients.

RESISTANCE SEAM WELDING (RSEW): A resistance welding process that produces a weld at the faying surfaces of overlapped parts progressively along a length of a joint. The weld may be made with overlapping weld nuggets, a continuous weld nugget, or by forging the joint as it is heated to the welding temperature by resistance to the flow of the welding current.

RESISTANCE SPOT WELDING (RSW): A resistance welding process that produces a weld at the faying surfaces of a joint by the heat obtained from resistance to the flow of welding current through the workpieces from electrodes that serve to concentrate the welding current and pressure at the weld area.

RESISTANCE WELDING (RW): A group of welding processes that produces coalescence of the faying surfaces with the heat obtained from resistance of the workpieces to the flow of the welding current in a circuit of which the workpieces are a part, and by the application of pressure.

RESISTANCE WELDING CONTROL: The device, usually electronic, that determines the welding sequence and timing with regard to the welding current pattern, electrode or platen force or movement, and other operational conditions of a resistance welding machine.

RESISTANCE WELDING CURRENT: The current in the welding circuit during the making of a weld, but excluding preweld or postweld current.

RESISTANCE WELDING DOWNSLOPE TIME: The time during which the welding current is continuously decreased.

RESISTANCE WELDING ELECTRODE: The part of a resistance welding machine through which the welding current and, in most cases, force are applied directly to the workpiece. The electrode may be in the form of a rotating wheel, rotating roll, bar, cylinder, plate, clamp, chuck, or modification thereof.

RESISTANCE WELDING GUN: A manipulatable device to transfer current and provide electrode force to the weld area (usually in reference to a portable gun).

RESISTANCE WELDING UPSLOPE TIME: The time during which the welding current continuously increases from the beginning of the welding current.

RESISTANCE WELDING VOLTAGE: The voltage through the workpieces, between the resistance welding electrodes.

RESISTANCE WELDING WELD TIME: The duration of welding current flow through the workpieces in making a weld by single-impulse welding or flash welding

REVERSE POLARITY: A nonstandard term for direct current electrode positive.

ROOT: A nonstandard term for joint root and weld root.

ROOT BEAD: A weld that extends into or includes part or all of the joint root.

ROOT EDGE: A root face of zero width.

ROOT FACE: That portion of the groove face within the joint root.

ROOT GAP: A nonstandard term for root opening.

ROOT OPENING: A separation at the joint root between workpieces.

ROOT PASS: A weld pass made to produce a root bead.

ROOT PENETRATION: The distance the weld metal extends into the joint root.

ROOT RADIUS: A nonstandard term for bevel radius.

ROOT REINFORCEMENT: Weld reinforcement opposite the side from which welding was done.

ROOT SHIELDING GAS: A nonstandard term for backing gas.

ROOT SURFACE: The exposed surface of a weld opposite the side from which welding was done.

S

SCARF JOINT: A nonstandard term for scarf groove.

SEAL WELD: Any weld intended primarily to provide a specific degree of tightness against leakage.

SEAM WELD: A continuous weld made between or upon overlapping members, in which coalescence may start and occur on the faying surfaces, or may have proceeded from the outer surface of one member. The continuous weld may consist of a single weld bead or a series of overlapping spot welds.

SECONDARY CIRCUIT: That portion of a welding machine that conducts the secondary current between the secondary terminals of the welding transformer and the electrodes, or electrode and workpiece.

SECONDARY CURRENT PATH (*RESISTANCE WELDING***):** The electrical path through which the welding current passes.

SEMIAUTOMATIC ARC WELDING: Manual welding with equipment that automatically controls one or more of the welding conditions.

SERIES WELDING: A resistance welding secondary circuit variation in which the secondary current is conducted through the workpieces and electrodes or wheels in a series electrical path to simultaneously form multiple resistance spot, seam, or projection welds.

SHEET SEPARATION (*RESISTANCE WELDING***):** The distance between the faying surfaces, adjacent to the weld, after a spot, seam, or projection weld has been made.

SHIELDED METAL ARC CUTTING (SMAC): An arc cutting process that uses a covered electrode.

SHIELDED METAL ARC WELDING (SMAW): An arc welding process with an arc between a covered electrode and the weld pool. The process is used with shielding from the decomposition of the electrode covering, without the application of pressure, and with filler metal from the electrode.

SHIELDING GAS: Protective gas used to prevent or reduce atmospheric contamination.

SHORT CIRCUITING TRANSFER (*GAS METAL ARC WELDING***):** Metal transfer in which molten metal from a consumable electrode is deposited during repeated short circuits.

SHOULDER: A nonstandard term when used for root face.

SHRINKAGE STRESS: A nonstandard term when used for residual stress.

SHRINKAGE VOID: A cavity type discontinuity normally formed by shrinkage during solidification.

SILVER ALLOY BRAZING: A nonstandard term when used for brazing with a silver-base filler metal.

SILVER SOLDERING: A nonstandard term for brazing with a silver-base filler metal.

SINGLE IMPULSE WELDING: A resistance welding process variation in which spot, projection, or upset welds are made with a single pulse.

SINGLE-PORT NOZZLE: A constricting nozzle of the plasma arc torch that contains one orifice, located below and concentric with the electrode.

SINGLE-WELDED JOINT (*FUSION WELDING*): A joint that is welded from one side only.

6G: A welding test position designation for a circumferential groove weld applied to a joint in pipe, with its axis approximately 45° from horizontal, in which the weld is made in the flat, vertical, and overhead welding positions. The pipe remains fixed until welding is complete.

SKULL: The unmelted residue from a liquated filler metal.

SLAG: A nonmetallic product resulting from the mutual dissolution of flux and nonmetallic impurities in some welding and brazing processes.

SLAG INCLUSION: A discontinuity consisting of slag entrapped in weld metal or at the weld interface.

SLOT WELD: A weld made in an elongated hole in one member of a joint fusing that member to another member. The hole may be open at one end. A fillet welded slot is not to be construed as conforming to this definition.

SLUGGING: The unauthorized addition of metal, such as a length of rod, to a joint before welding or between passes, often resulting in a weld with incomplete fusion.

SPATTER: The metal particles expelled during fusion welding that do not form a part of the weld.

SPIT: A nonstandard term when used for expulsion and flash.

SPOOL: A filler metal package consisting of a continuous length of welding wire in coil form wound on a cylinder (called a barrel), which is flanged at both ends. The flange contains a spindle hole of smaller diameter than the inside diameter of the barrel.

SPOT WELD: A weld made between or upon overlapping members in which coalescence may start and occur on the faying surfaces or may proceed from the outer surface of one member. The weld cross section (plan view) is approximately circular.

SPRAY TRANSFER (*GAS METAL ARC WELDING*): Metal transfer in which molten metal from a consumable electrode is propelled axially across the arc in small droplets. *SEE ALSO GLOBULAR TRANSFER AND SHORT CIRCUITING TRANSFER.*

SQUEEZE TIME (*RESISTANCE WELDING*): The time between the initiation of the welding cycle and first application of current in spot, seam, or projection and some types of upset welds.

STACK CUTTING: Thermal cutting of stacked metal plates arranged so that all the plates are severed by a single cut.

STAGGERED INTERMITTENT WELD: An intermittent weld on both sides of a joint in which the weld increments on one side are alternated with respect to those on the other side.

STANDARD WELDING PROCEDURE SPECIFICATION (SWPS): A welding procedure specification qualified according to the requirements of AWS B2.1, approved by AWS, and made available for production welding by companies or individuals other than those performing the qualification test.

STANDOFF DISTANCE: The distance between a nozzle and the workpiece.

START CURRENT (Gas Metal Arc Welding): The current value during start time interval.

START TIME: The time interval prior to weld time during which arc voltage and current reach a preset value greater or less than welding values.

STICK ELECTRODE: A nonstandard term for covered electrode.

STICK ELECTRODE WELDING: A nonstandard term for shielded metal arc welding.

STICKOUT (*GAS METAL ARC WELDING*): The length of unmelted electrode extending beyond the end of the gas nozzle.

STICKOUT (*GAS TUNGSTEN ARC WELDING*): The length of tungsten electrode extending beyond the end of the gas nozzle.

STRAIGHT POLARITY: A nonstandard term for direct current electrode negative.

STRESS-CORROSION CRACKING: Failure of metals by cracking under combined action of corrosion and stress, residual or applied. In brazing, the term applies to the cracking of stressed base metal due to the presence of a liquid filler metal.

STRESS-RELIEF CRACKING: Intergranular cracking in the heat-affected zone or weld metal as a result of the combined action of residual stresses and postweld exposure to an elevated temperature.

STRESS-RELIEF HEAT TREATMENT: Uniform heating of a structure or a portion thereof to a sufficient temperature to relieve the major portion of the residual stresses, followed by uniform cooling.

STRINGER BEAD: A weld bead formed without appreciable weaving. *SEE ALSO WEAVE BEAD.*

STUB: The short length of filler metal electrode, welding rod, or brazing rod that remains after its use for welding or brazing.

STUD ARC WELDING: A nonstandard term for arc stud welding.

STUD WELDING: A general term for joining a metal stud or similar part to a workpiece. Welding may be accomplished by arc, resistance, friction, or other process with or without external gas shielding.

SUBMERGED ARC WELDING (SAW): An arc welding process that uses an arc or arcs between a bare metal electrode or electrodes and the weld pool. The arc and molten metal are shielded by a blanket of granular flux on the workpieces. The process is used without pressure and with filler metal from the electrode and sometimes from a supplemental source (welding rod, flux, or metal granules).

SUCK-BACK: A nonstandard term when used for underfill at the root surface.

SURFACE EXPULSION (*RESISTANCE WELDING*): Expulsion occurring at an electrode to workpiece contact rather than at the faying surface.

SURFACE PREPARATION: The operations necessary to produce a desired or specified surface condition.

SURFACING: The application by welding of a layer, or layers, of material to a surface to obtain desired properties or dimensions, as opposed to making a joint.

SURFACING MATERIAL: The material that is applied to a base metal or substrate during surfacing.

SURFACING METAL: The metal or alloy that is applied to a base metal or substrate during surfacing.

SURFACING WELD: A weld applied to a surface, as opposed to making a joint, to obtain desired properties or dimensions.

SYNCHRONOUS TIMING (*RESISTANCE WELDING*): The initiation of each half cycle of welding transformer primary current on an accurately timed delay with respect to the polarity reversal of the power supply.

T

TACKER: A nonstandard term for a tack welder.

TACK WELD: A weld made to hold parts of a weldment in proper alignment until the final welds are made.

TAPER DELAY TIME: The time interval after upslope during which the maximum welding current or high pulse current is constant.

TAPER TIME: The time interval when current increases or decreases continuously from the welding current to final taper current.

TEMPER TIME (*RESISTANCE WELDING*): The time following quench time during which a current is passed through the weld for heat treating.

TEST COUPON: A weld, braze or solder assembly for procedure or performance qualification testing.

TEST SPECIMEN: A sample of a test coupon subjected to testing.

THEORETICAL THROAT: The distance from the beginning of the joint root perpendicular to the hypotenuse of the largest right triangle that can be inscribed within the cross section of a fillet weld. This dimension is based on the assumption that the root opening is equal to zero.

THERMAL STRESS: Stress resulting from nonuniform temperature distribution.

3F: A welding test position designation for a linear fillet weld applied to a joint in which the weld is made in the vertical welding position.

3G: A welding test position designation for a linear groove weld applied to a joint in which the weld is made in the vertical welding position.

THROAT OF FILLET WELD: *SEE ACTUAL THROAT, EFFECTIVE THROAT AND THEORETICAL THROAT.*

THROAT OF GROOVE WELD: A nonstandard term for groove weld size.

TIG WELDING: A nonstandard term for gas tungsten arc welding

T-JOINT: A joint between two members located approximately at right angles to each other in the form of a T.

TORCH BRAZING (TB): A brazing process in which the heat required is furnished by a fuel gas flame.

TORCH TIP: *SEE CUTTING TIP AND WELDING TIP.*

TRANSFERRED ARC (*PLASMA ARC WELDING*): A plasma arc established between the electrode of the plasma arc torch and the workpiece. *SEE ALSO NONTRANSFERRED ARC.*

TRANSVERSE CRACK: A crack with its major axis oriented approximately perpendicular to the weld axis.

TRAVEL ANGLE: The angle less than 90° degrees between the electrode axis and a line perpendicular to the weld axis, in a plane determined by the electrode axis and the weld axis. This angle can also be used to partially define the position of guns, torches, rods, and beams.

TUNGSTEN ELECTRODE: A nonfiller metal electrode used in arc welding, arc cutting, and plasma spraying, made principally of tungsten.

TUNGSTEN INCLUSION: A discontinuity consisting of tungsten entrapped in weld metal.

2F, PLATE: A welding test position designation for a linear fillet weld applied to a joint in which the weld is made in the horizontal welding position.

2G, PLATE: A welding test position designation for a linear groove weld applied to a joint in which the weld is made in the horizontal welding position.

U

UNDERBEAD CRACK: A heat-affected zone crack in steel weldments arising from the occurrence of a crack susceptible microstructure, residual or applied stress, and the presence of hydrogen.

UNDERCUT: A groove melted into the base metal adjacent to the weld toe or weld root and left unfilled by weld metal.

UNDERFILL: A groove weld condition in which the weld face or root surface is below the adjacent surface of the base metal.

V

VACUUM BRAZING: A nonstandard term for various brazing processes that take place in a chamber or retort below atmospheric pressure.

VERTICAL WELDING POSITION: The welding position in which the weld axis, at the point of welding, is approximately vertical and the weld face lies in an approximately vertical plane.

W

WEAVE BEAD: A weld bead formed using weaving.

WEAVING: A welding technique in which the energy source is oscillated transversely as it progresses along the weld path. *SEE ALSO WEAVE BEAD AND WHIPPING.*

WELD: A localized coalescence of metals or nonmetals produced either by heating the materials to the welding temperature, with or without the application of pressure, or by the application of pressure alone and with or without the use of filler material.

WELDABILITY: The capacity of material to be welded under the imposed fabrication conditions into a specific, suitably designed structure and to perform satisfactorily in the intended service.

WELD AXIS: A line through the length of the weld, perpendicular to and at the geometric center of its cross section.

WELD BEAD: A weld resulting from a weld pass.

WELD BONDING: A resistance spot welding process variation in which the spot weld strength is augmented by adhesive at the faying surfaces.

WELD CRACK: A crack located in the weld metal or heat affected zone.

WELDER: One who performs manual or semiautomatic welding.

WELDER CERTIFICATION: Written verification that a welder has produced welds meeting a prescribed standard of welder performance.

WELDER PERFORMANCE QUALIFICATION: The demonstration of a welder's or welding operator's ability to produce welds meeting prescribed standards.

WELD FACE: The exposed surface of a weld on the side from which welding was done.

WELD GAGE: A device designed for measuring the shape and size of welds.

WELD GROOVE (FUSION WELDING): A channel in the surface of a workpiece or an opening between two joint members that provides space to contain weld metal.

WELDING: A joining process that produces coalescence of materials by heating them to the welding temperature, with or without the application of pressure or by the application of pressure alone, and with or without the use of filler metal.

WELDING ARC: A controlled electrical discharge between the electrode and the workpiece that is formed and sustained by the establishment of a gaseous conductive medium, called an arc plasma.

WELDING BLOWPIPE: A nonstandard term for oxyfuel gas welding torch.

WELDING ELECTRODE: A component of the welding circuit through which current is conducted and that terminates at the arc, molten conductive slag, or base metal.

WELDING FILLER METAL: The metal or alloy to be added in making a weld joint that alloys with the base metal to form weld metal in a fusion welded joint.

WELDING GENERATOR: A generator used for supplying current for welding.

WELDING GROUND: A nonstandard and incorrect term for workpiece connection.

WELDING HELMET: A device equipped with a filter plate designed to be worn on the head to protect eyes, face, and neck from arc radiation, radiated heat, spatter or other harmful matter expelled during some welding and cutting processes.

WELDING LEADS: The workpiece lead and electrode lead of an arc welding circuit.

WELDING MACHINE: Equipment used to perform the welding operation. For example, spot welding machine, arc welding machine, and seam welding machine.

WELDING OPERATOR: One who operates adaptive control, automatic, mechanized, or robotic welding equipment.

WELDING POSITION: The relationship between the weld pool, joint, joint members, and welding heat source during welding. *SEE ALSO FLAT WELDING POSITION, HORIZONTAL WELDING POSITION, OVERHEAD WELDING POSITION, AND VERTICAL WELDING POSITION.*

WELDING POWER SOURCE: An apparatus for supplying current and voltage suitable for welding.

WELDING PROCEDURE: The detailed methods and practices involved in the production of a weldment. *SEE ALSO WELDING PROCEDURE SPECIFICATION.*

WELDING PROCEDURE QUALIFICATION RECORD (WPQR): A record of welding variables used to produce an acceptable test weldment and the results of tests conducted on the weldment to qualify a welding procedure specification.

WELDING PROCEDURE SPECIFICATION (WPS): A document providing in detail the required variables for a specific application to assure repeatability by properly trained welders and welding operators.

WELDING RECTIFIER: A device in a welding power source for converting alternating current to direct current.

WELDING ROD: A form of welding filler metal, normally packaged in straight lengths that does not conduct electrical current.

WELDING SCHEDULE: A written statement, usually in tabular form, specifying values of parameters and the welding sequence for performing a welding operation.

WELDING SEQUENCE: The order of making the welds in a weldment.

WELDING SYMBOL: A graphical representation of the specifications for producing a welded joint.

WELDING TECHNIQUE: The details of a welding procedure that are controlled by the welder or welding operator.

WELDING TEST POSITION: The orientation of a weld joint for welding procedure or welder qualification testing. *SEE ALSO WELDING TEST POSITION DESIGNATION.*

WELDING TEST POSITION DESIGNATION: A symbol representation for a fillet weld or a groove weld, the joint orientation and the welding test position. *SEE ALSO 1F, 2F, 2FR, 3F, 4F, 5F, 6F, 1G, 2G, 3G, 4G, 5G, 6G, AND 6GR.*

WELDING TIP (*OXYFUEL GAS WELDING*): That part of an oxyfuel gas welding torch from which gases issue.

WELDING TORCH: *SEE GAS TUNGSTEN ARC WELDING TORCH, OXYFUEL GAS WELDING TORCH, AND PLASMA ARC WELDING TORCH.*

WELDING TRANSFORMER: A transformer used for supplying current for welding.

WELDING VOLTAGE: *SEE ARC VOLTAGE, OPEN CIRCUIT VOLTAGE AND RESISTANCE WELDING VOLTAGE.*

WELDING WHEEL: A nonstandard term for resistance welding electrode.

WELDING WIRE: A form of welding filler metal, normally packaged as coils or spools, that may or may not conduct electrical current depending upon the welding process with which it is used.

WELD INTERFACE: The interface between weld metal and base metal in a fusion weld, between base metals in a solid-state weld without filler metal, or between filler metal and base metal in a solid-state weld with filler metal.

WELDMENT: An assembly whose component parts are joined by welding.

WELD METAL: Metal in a fusion weld consisting of that portion of the base metal and filler metal melted during welding.

WELD METAL CRACK: A crack occurring in the weld metal zone.

WELD PASS: A single progression of welding along a joint. The result of a weld pass is a weld bead or layer.

WELD PASS SEQUENCE: The order in which the weld passes are made.

WELD PENETRATION: A nonstandard term for joint penetration and root penetration.

WELD POOL: The localized volume of molten metal in a weld prior to its solidification as weld metal.

WELD REINFORCEMENT: Weld metal in excess of the quantity required to fill a weld groove. *SEE ALSO CONVEXITY, FACE REINFORCEMENT, AND ROOT REINFORCEMENT.*

WELD ROOT: The points, shown in cross section, at which the weld metal intersects the base metal and extends furthest into the weld joint.

WELD SIZE: *SEE EDGE WELD SIZE, FILLET WELD SIZE, FLANGE WELD SIZE AND GROOVE WELD SIZE.*

WELD SYMBOL: A graphic character connected to the reference line of a welding symbol specifying the weld type. For examples and rules for their application, refer to AWS A2.4, Standard Symbols for Welding, Brazing, and Nondestructive Examination.

WELD TAB: Additional material that extends beyond either end of the joint, on which the weld is started or terminated.

WELD THROAT: *SEE ACTUAL THROAT, EFFECTIVE THROAT AND THEORETICAL THROAT.*

WELD TOE: The junction of the weld face and the base metal.

WHIPPING: A manual welding technique in which the arc or flame is oscillated backwards and forwards in the direction of travel as it progresses along the weld path.

WORK ANGLE: The angle less than 90° between a line perpendicular to the major workpiece surface and a plane determined by the electrode axis and the weld axis. In a T-joint or a corner joint, the line is perpendicular to the nonbutting member. This angle can also be used to partially define the position of guns, torches, rods, and beams. *SEE ALSO DRAG ANGLE, PUSH ANGLE, AND TRAVEL ANGLE.*

ORGANIZATIONAL, INTERMEDIATE AND DEPOT MAINTENANCE WELDING SYMBOLS AND CODES

Reference Material

Standard Symbols for Welding, Brazing, and Nondestructive Examination ..... AWS A2.4

Alphabetical Index

Subject **Page No.**

Basic Weld Symbols 2
Elements of a Welding Symbol 2
Location of the Weld With Respect to Joint 2
Location Significance of Arrow.....2
Welding Symbols and Codes 2
General 2

Record of Applicable Technical Directives

None

NOTE

This Work Package contains GUIDANCE information to supplement higher order technical document or instructions.

1. **WELDING SYMBOLS AND CODES.**

a. GENERAL. Welding symbols provide the means for placing complete and concise welding information on drawings. The reference line of the welding symbol is used to designate the type of weld to be made, its location, dimensions, extent, contour, other supplementary in formation, and when necessary a tail is attached to the reference line which provides specific notations. When such notations are not required the tail is omitted.

b. For further weld symbol definition refer to American Welding Society (AWS) A2.4.

2. **ELEMENTS OF A WELDING SYMBOL.**

a. A distinction is made between the term "**weld** symbol" and "**welding** symbol".

b. The "weld symbol" is the ideograph that is used to indicate the desired type of weld.

c. The assembled "welding symbol" consists of the following eight elements or any of these elements as are necessary: reference line; arrow; basic weld symbols; dimensions and other data; supplementary symbols; finish symbols; tail; and the specification, process, or other reference. The location of the elements of a welding symbol with respect to each other is shown in Figure 1.

3. **BASIC WELD SYMBOLS.**

a. General. Weld symbols are used to indicate the following: welding processes used in metal joining operations; whether the weld is localized or "all around;" shop or field welds; and the contour of the welds. These basic weld symbols are summarized in Figure 1 through Figure 4.

b. Arc and Gas Weld Symbols. These symbols shall be as shown in Figure 4.

c. Resistance Weld Symbols. The symbols shall be as shown in Figure 4.

d. Brazing, Forge, Thermite, Induction, and Flow Weld Symbols. These welds shall be indicated by using a process or specification reference in the tail of the welding symbols. When the use of a definite process is required the process may be indicated by one or more of the letter designations as shown in Table 1 and Table 2. When no specification, process or other reference is used with a welding symbol, the tail may be omitted.

e. Supplementary Symbols. These symbols are used in many welding processes and shall be used as shown in Figure 2.

4. **LOCATION SIGNIFICANCE OF ARROW.**

a. In fillet, groove, flange, and flash or upset welding symbols, the arrow shall connect the welding symbol reference line to one side of the joint, and this side shall be considered the "arrow side" of the joint (A, Figure 3). The opposite side of the joint shall be considered the "other side" of the joint (B, Figure 3).

b. In plug, slot, arc spot, arc seam, resistance spot, resistance seam and projection welding symbols the arrow shall connect the welding symbol reference line to the outer surface of one of the members of the joint at the center line of the desired weld. The member to which the arrow points shall be considered the "arrow side" member. The other member of the joint shall be considered the "other side" member.

c. When a joint is depicted by a single line on the drawing and the arrow of a welding symbol is directed to this line, the "arrow side" of the joint shall be considered as the near side of the joint in accordance with the usual conventions of drafting (C and D, Figure 3).

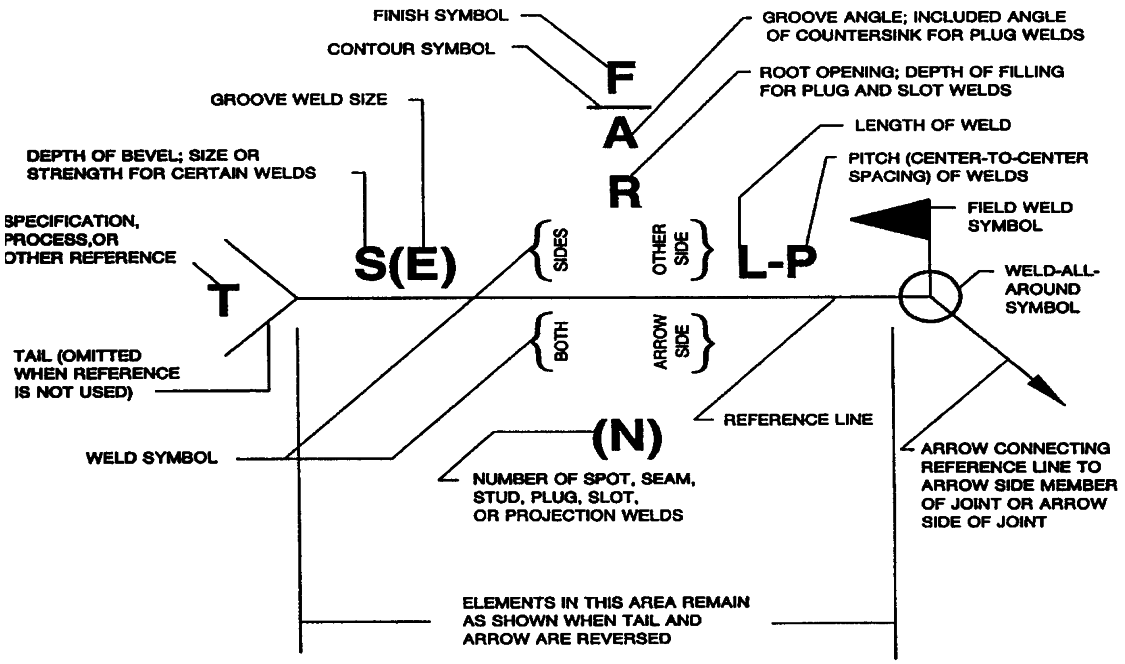

Figure 1. Standard Location of Elements of a Welding Symbol

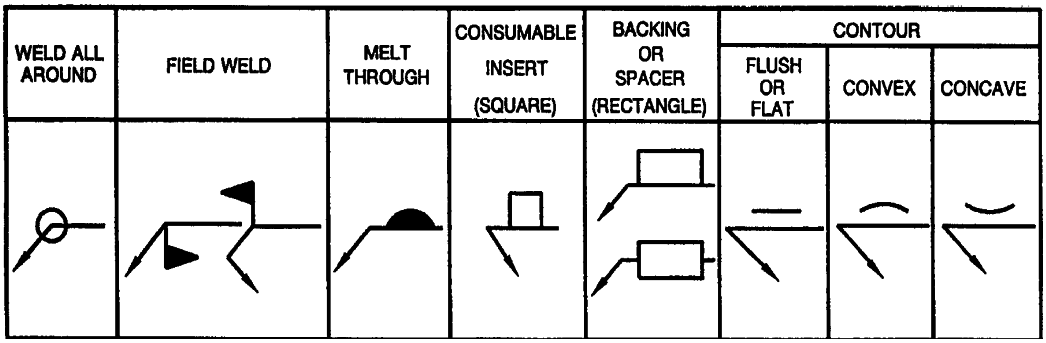

Figure 2. Supplementary Symbols

Table 1. Designation of Thermal Processes by Letters

Brazing	B
Torch brazing	TB
Twin carbon-arc brazing	TCAB
Furnace brazing	FB
Induction brazing	IB
Resistance brazing	RB
Dip brazing	DB
Block brazing	BB
Flow brazing	FLB
Infrared brazing	IRB
Diffusion brazing	DFB
Arc brazing welding	ABW
Resistance welding	RW
Flash welding	FW
Upset welding	UW
Percussion welding	PEW
Induction welding	IW
Projection welding	PW
Resistance spot welding	RSW
Resistance seam welding	RSEW
Arc welding	AW
Bare metal-arc welding	BMAW
Arc Stud welding	SW
Submerged arc welding	SAW
Gas tungsten-arc welding	GTAW
Gas metal-arc welding	GMAW
Atomic hydrogen welding	AHW
Shielded metal-arc welding	SMAW
Twin carbon-arc welding	CAW-T
Carbon-arc welding	CAW
Gas carbon-arc welding	CAW-G
Shielded carbon-arc welding	CAW-S
Flux cored arc welding	FCAW
Plasma arc welding	PAW
Oxyfuel gas welding	OFW
Pressure gas welding	PGW
Oxyhydrogen welding	OHW
Oxyacetylene welding	OAW
Air-acetylene welding	AAW
Other Welding	
Electron beam welding	EBW
Electroslag welding	ESW
Flow welding	FLOW
Induction welding	IW
Laser beam welding	LBW
Thermite welding	TW

Table 2. Designation of Cutting Processes by Letters	
Arc cutting	AC
Air-carbon-arc cutting	AC-C
Carbon-arc cutting	CAC
Gas Metal-arc cutting	GMAC
Plasma arc cutting	PAC
Oxygen cutting	OC
Flux cutting	OC-F
Metal powder cutting	OC-P
Oxygen arc cutting	OAC
Oxygen gouging	OG
*The following suffixes may be used to indicate the methods of applying above processes:	
Automatic cutting	AU
Machine cutting	ME
Manual cutting	MA
Semi-automatic cutting	SA

d. When a joint is depicted as an area parallel to the place of projection in a drawing and the arrow of a welding symbol is directed to that area, the ”arrow side” member of the joint shall be considered as the near member of the joint in accordance with the usual conventions of drafting.

5. **LOCATION OF THE WELD WITH RESPECT TO JOINT.** (Refer to Figure 4.)

a. Welds on the arrow side of the joint shall be shown by placing the weld symbol on the side of the reference line toward the reader.

b. Welds on the other side of the joint shall be shown by placing the welding symbol on the side of the reference line away from the reader.

c. Welds on both sides of the joint shall be shown by placing weld symbols on both sides of the reference line, toward and away from the reader.

d. Resistance spot, resistance seam, flash and upset weld symbols have no arrow side or other side significance in themselves, although supplementary symbols used in conjunction with these symbols may have such significance. For example, the flush contour symbol is used in conjunction with the spot and seam symbols to show that the exposed surface of one member of the joint is to be flush. Resistance spot, resistance seam, flash and upset weld symbols shall be centered on the reference line.

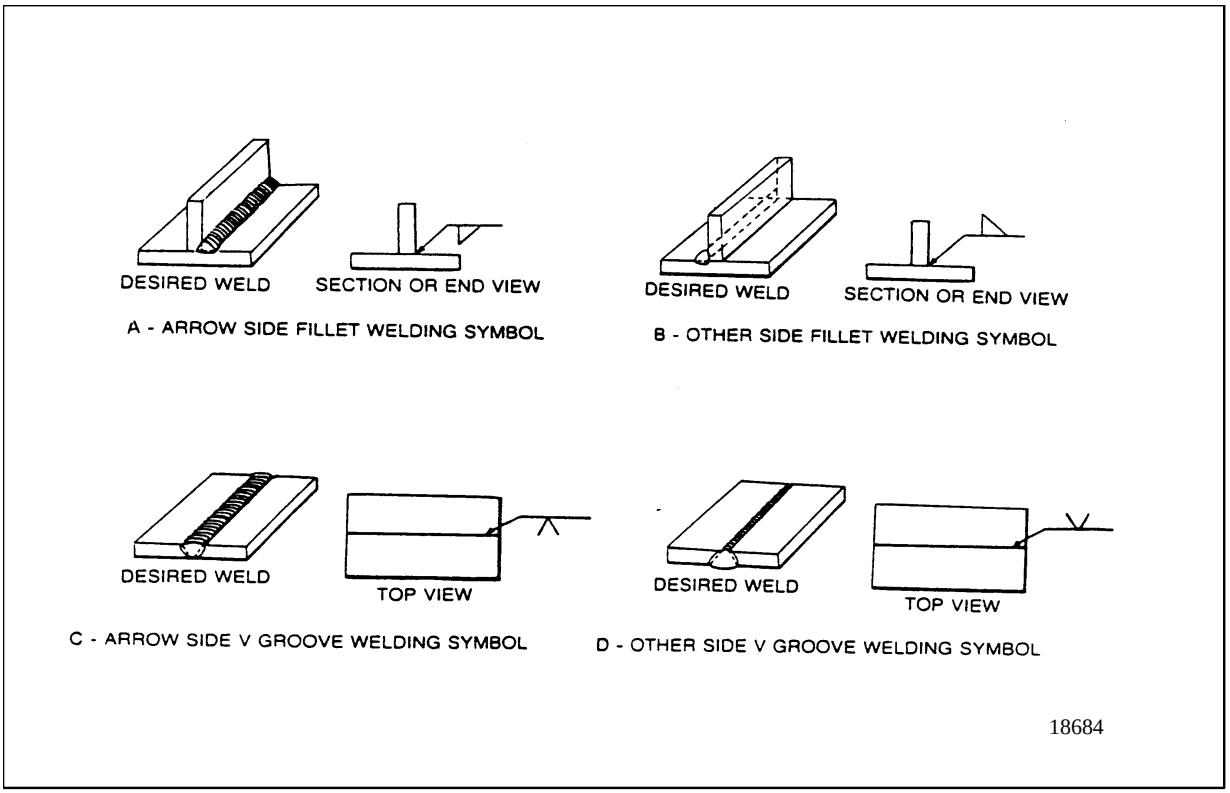

Figure 3. Arrow Location Significance Fillet and Groove Welding Symbols Denoting Location of the Weld

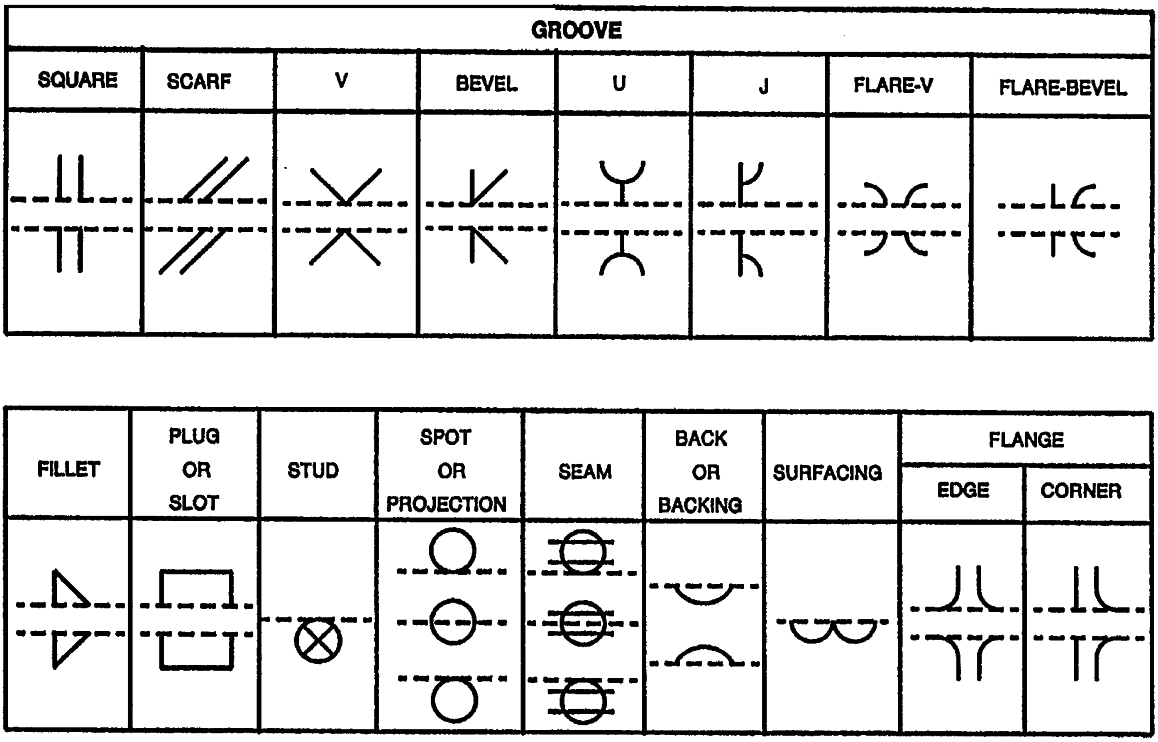

NOTE: THE REFERENCE LINE IS SHOWN DASHED FOR ILLUSTRATIVE PURPOSES.

Figure 4. Groove and Other Welding Symbols Denoting Location of the Weld

THIS PAGE INTENTIONALLY LEFT BLANK

ORGANIZATIONAL, INTERMEDIATE AND DEPOT MAINTENANCE MATERIAL CHARACTERISTICS

Reference Material

Standard Hardness Conversion Tables for Metals Relationship Among Brinell Hardness, Vickers Hardness, Rockwell Hardness, Superficial Hardness, Knoop Hardness, and Scleroscope Hardness ..... ASTM E140
Standard Test Methods for Brinell Hardness of Metallic Materials ..... ASTM E10
Standard Test Methods for Rockwell Hardness of Metallic Materials ..... ASTM E18
Standard Test Methods for Vickers Hardness of Metallic Materials ..... ASTM E92

Alphabetical Index

Subject **Page No.**

Classification of Aluminum Alloys 5
- Heat-Treatable Alloys 5
- Non-Heat Treatable Alloys 5
- Numbering System 5
- Temper Designation of Aluminum and Aluminum Alloy 5

Classification of Ferrous (IRON) Alloys 3
- Alloy Steels 3
- Carbon Steels 3

Classification of Magnesium Alloys 6
- Basic Classification 6
- Temper Designation of Magnesium Alloys 6

Generation of Heat in Welding 2

Hardness Testing 7
- Methods of Hardness Testing 8
- Procedures of Hardness Testing 8
- Procedures for Measuring Hardness 8
- Relationship Between Hardness and Tensile Strength 8

Heat Treatment of Steel 6
- Annealing 7
- Hardening 7
- Heat Affected Zone (HAZ) 6
- Normalizing 7
- Stress Relief Heat Treatment 7
- Tempering 7

Properties of a Metal 2
- Ductility 3
- Elasticity 2
- General Description 2
- Hardness 3
- Heat and Electrical Conductivity 3
- Mechanical Properties 2
- Plasticity 3
- Toughness 3

Record of Applicable Technical Directives

None

NOTE

This Work Package contains GUIDANCE information to supplement higher order technical document or instructions.

1. **GENERATION OF HEAT IN WELDING.**

a. One BTU (British Thermal Unit) (about 252 calories) is the amount of heat required to raise the temperature of one pound of water one degree Fahrenheit. The approximate heat energy required to raise the temperature of one pound of solid steel from room temperature to its melting point 2700°F (still in solid state) is 430 BTU or 109,000 calories.

b. An additional amount of heat is required to transform the solid steel to the liquid state without further increase in temperature. This heat, called the latent heat of fusion, is about 115 BTU per pound of steel. Therefore, the total heat required to melt one pound of steel is 430 plus 115: or a total of 545 BTUs.

c. In actual welding, a greater amount of heat is required to fuse a given amount of metal in a joint due to heat loss through conduction to the adjacent metal. Therefore, the heat input for welding must be sufficient to melt the metal despite the constant loss of heat to colder metal next to the weld pool and to the environment. Generally, one-fourth of the heat is lost to the air and the electrode leaving three- fourths of the heat to raise the temperature of the part to be welded.

d. The heat developed by the arc is approximately: Arc voltage times arc current times time the arc burns. An electrode arc at 35 volts, 150 amps generates 35 times 150 = 5250 watts or 5 BTU every second.

2. **PROPERTIES OF A METAL.**

a. GENERAL DESCRIPTION.

(1) A physical property is an inherent characteristic of the metal such as melting point or magnetic property and is not dependent on external pressure or force to determine its limits if there is no physical change in the metal structure.

(2) A mechanical property, on the other hand, is measured by the extent to which the metal reacts to the applied force. For example, tensile strength of a metal is determined by how much force is applied to the metal before it breaks.

(3) For the purpose of welding, the mechanical properties of a weld are more important considerations than the physical properties.

b. MECHANICAL PROPERTIES

(1) **Tensile Strength**. Tensile strength is expressed as either TS or UTS (ultimate tensile strength) and appears in literature frequently to describe the ultimate strength where a metal will break under gradual increase of the load in longitudinal direction. Tensile strength is usually expressed in pounds per square inch (PSI) or (KSI) which is one thousand times PSI. For example, if a steel has an ultimate tensile strength of 90,000 psi or 90 KSI, a load of 90,000 pounds is required to break the steel if it has one square inch of cross sectional area. In other words, the steel will bear the load up to 89,999 pounds without failure under equilibrium conditions.

(2) **Yield Strength (YS)**. Yield strength is a stress required to produce the initial significant plastic deformation of the metal. Yield strength is usually much less than the tensile strength but is a useful mechanical property in designing the structure.

(3) **Fatigue Strength**. Fatigue strength is the ability of a metal to withstand cyclical or repeated alternating stress without breaking. Since the aircraft landing gear is repeatedly subjected to a severe cyclical load each time it lands and takes off, fatigue strength is a very important physical property for landing gear material. Metal fatigue or fatigue failure occurs at much lower strength levels than yield or tensile strength limits.

(4) **Shear Strength**. Shear strength is the maximum amount of cross sectional stress that a metal will sustain before permanent deformation or rupture occurs.

c. ELASTICITY. Elasticity is the property of a metal that allows it to be stretched like a rubber band and return to its original size and shape after load is removed. Of course, it is hard to observe the stretch by the unaided eye but with proper testing equipment, the elasticity can be demonstrated. The elastic property is very important in design considerations as a basic requisite because the metal used must return to its original shape when the load is removed.

d. PLASTICITY. With the increase of the load, the elastic behavior changes at some point of loading to plastic. The stretched metal never returns to its original dimension even if the load is removed. In other words, the metal is permanently deformed or plastically deformed. Therefore, plasticity can be defined as the ability of a material to assume deformation without breaking.

e. DUCTILITY. Ductility is the ability of a metal to become permanently stretched without breaking or deforming. Each metal has a ductility limit beyond which fracture will occur. Prior to reaching this limit, the metal simply remains elongated.

f. TOUGHNESS. Toughness is the ability of a metal to resist rapid or sudden applications of force such as impact.

g. HARDNESS. Hardness is the ability of a metal to resist penetration by another metal or diamond indenter. The hardness of a metal is directly related to its machinability which will be discussed later. The relationship between the hardness and tensile strength in certain hardness ranges will be discussed later.

h. HEAT AND ELECTRICAL CONDUCTIVITY. Conductivity is the ability of a material to conduct or transfer heat or electricity.

3. **CLASSIFICATION OF FERROUS (IRON) ALLOYS.**

a. A numerical index system (refer to Table 1) is used to identify the composition of the steels which enables the use of numerals that partially describe composition of material. The first digit indicates the type to which the steel belongs.

For example:

“1” indicates a carbon steel

“2” indicates a nickel steel; and

“3” indicates a nickel chromium steel.

b. In the case of simple alloy steels, the second digit indicates the approximate percentage of predominant alloying element. The last two or three digits indicate approximate carbon content in hundredths of one percent.

4. **CARBON STEELS.**

a. Steel containing carbon in the range of 0.10-0.30% is classified as low carbon steel. Low carbon steels are in the range of 1010 through 1030 of numerical system described in Table 1. The steels of this grade are easy to weld without any preparations such as post and preheat treatments.

b. Steel containing carbon in the range from 0.30-0.50% is classified as medium carbon steel. They are weldable with certain precautions requiring preheat and post heat treatments.

c. Steel containing carbon in the range of 0.50-1.05% is classified as high carbon steel. In fully heat treated conditions high carbon steel is very hard and welding should be avoided.

Table 1. Basic Numerals of Most Commonly Used Steels

TYPES OF STEEL	NUMERALS (and digits)
CARBON STEELS	**1xxx**
Plain Carbon	**10xx**
Free Cutting (screw stock)	**11xx**
Manganese Steel	**13xx**
NICKEL CHROMIUM STEELS	**3xxx**
1.25% Nickel, 0.65% Chromium	**31xx**
MOLYBDENUM STEELS	**4xxx**
0.25% Molybdenum	**40xx**
NICKEL-CHROMIUM-MOLYBDENUM STEELS	
1.80% Nickel; 0.5% - 0.8% Chromium; 0.25% Molybdenum	**43xx**
0.55% Nickel; 0.50%- 0.65% Chromium; 0.20% Molybdenum	**86xx**
0.55% Nickel; 0.50% Chromium; 0.25% Molybdenum	**87xx**
3.25% Nickel; 1.20% Chromium; 0.12% Molybdenum	**93xx**
NICKEL-MOLYBDENUM STEELS	
1.75% Nickel; 0.25% Molybdenum	**46xx**
3.5% Nickel; 0.25% Molybdenum	**48xx**
CHROMIUM STEELS	
Low Chromium	**50xx**
Medium Chromium	**51xxx**
High Chromium	**52xxx**
CHROMIUM-VANADIUM STEELS	
0.80-1.00% Chromium; 0.10-0.15% Vanadium	**61xx**

5. **ALLOY STEELS.**

a. In hardening steel, the carbon plays the most important role. The hardness attainable in the steel is dependent upon the amount of carbon only. It is difficult, however, to heat treat high carbon steel unless other alloying elements, such as nickel, chromium, molybdenum, and vanadium are used. Some benefits of adding alloying elements are as follows:

(1) A lower percentage of carbon is required for hardening. Lowering the carbon content makes the steel more ductile and less susceptible to embrittlement cracks.

(2) A lower critical temperature range is required which permits the use of lower heating temperatures for hardening.

(3) Corrosion resistance is increased as in the 18% chromium and 8% nickel stainless steel.

(4) The lower heat treating temperature requirements reduce the dangers of overheating, excessive grain growth and the consequent development of brittleness.

(5) The characteristic of depth hardening from the addition of nickel to steel as an alloy results in good mechanical properties after quenching and tempering. At a given strength, the nickel steels provide greatly improved elastic properties, impact resistance, and toughness.

Table 2. Various Classes of Aluminum and Aluminum Alloy

NUMERALS (and Digits)	CLASS OF ALUMINUM/ALUMINUM ALLOY
1xxx	Aluminum 99.0% of minimum and greater
2xxx	Copper is major alloying element
3xxx	Manganese is major alloying element
4xxx	Silicon is major alloying element
5xxx	Magnesium is major alloying element
6xxx	Magnesium and silicon are major alloying elements
7xxx	Zinc is major alloying element

6. **CLASSIFICATION OF ALUMINUM ALLOYS.**

a. **NUMBERING SYSTEM**. Aluminum and aluminum alloys have a standard four digit numbering system (refer to Table 2). The first digit represents the major alloying element, the second digit identifies modification, and the last two digits serve only to identify different aluminum alloys that are in common commercial use except in the 1xxx class. In the 1xxx class, the last two digits indicate the aluminum content over 99 percent in hundredths of one percent.

Example #1: Aluminum alloy “1017” indicates a minimum aluminum composition of 99%; the “0” indicates it is the original composition; and the “17” indicates aluminum content 99.17%.

Example #2: Aluminum Alloy “3217” indicates a manganese alloy “3”; the “2” indicates the second modification of this alloy, and the “17” indicates a commonly used commercial alloy.

b. **TEMPER DESIGNATION OF ALUMINUM AND ALUMINUM ALLOY.** In high purity form, aluminum is soft and ductile. Most commercial uses, however, require greater strength than pure aluminum affords. This is achieved in aluminum first by the addition of other elements to produce various alloys, which, singly or in combination, impart strength to the metal. Further strengthening is possible by means which classify the alloys roughly into two categories: non-heat treatable and heat-treatable.

c. **NON-HEAT-TREATABLE ALLOYS.** The initial strength of alloys in this group depends upon the hardening effect of elements such as manganese, silicon, iron and magnesium, singly or in various combinations. The non-heat-treatable alloys, therefore, are usually designated in the 1000, 3000, 4000, or 5000 series. Since these alloys are workhardenable, further strengthening is made possible by various degrees of cold working, denoted by the ”H” series of tempers as shown below:

H1:	strain hardened
H2:	strain hardened and partially annealed
H3:	strain hardened and stabilized
F:	as fabricated
O :	annealed

The second number added to the above top three designations (H1, H2 and H3) indicates the degree of hardness.

2 = 1/4 hard	H12, H22, H32
4 = 1/2 hard	H14, H24, H34
6 = 3/4 hard	H16, H26, H36
8 = Full hard	H18, H28, H38

For Example: Aluminum Alloy 5052-H24 is strain hardened and partially annealed to half-hard.

d. **HEAT-TREATABLE ALLOYS.** The initial strength of alloys in this group is enhanced by the addition of alloying elements such as copper, magnesium, zinc, and silicon. Since these elements show increasing solubility in aluminum with increasing temperature, it is possible to subject them to thermal treatments, which will impart pronounced strengthening.

(1) The first step, called solution heat treatment (ST), is an elevated temperature process designed to put the soluble elements into the solid solution. This is followed by rapid quenching, usually, which momentarily “freezes” the structure in a short time to make the alloy very workable. It is at this stage that some fabricators retain this more workable structure by storing the alloys at below freezing temperature until they are ready to form the part.

For Example: Some rivets are stored in the freezer and taken out just prior to installation.

(2) At room or elevated temperatures, however, the alloys are not stable after quenching, and precipitation of the constituents from the supersaturated solution begins. After a period of several days at room temperature, termed aging (A) or room-temperature precipitation, the alloy is considerably stronger. Many alloys approach a stable condition at room temperature, but some alloys, particularly those containing magnesium and silicon or magnesium and zinc, continue to age harden at room temperature for long periods of time.

(3) By heating for a controlled time at slightly elevated temperatures, even further strengthening is possible and properties are stabilized. This process is called artificial aging or precipitation hardening. By the proper combination of solution heat treatment, quenching, cold working and artificial aging, the highest strengths are obtained.

(4) Numerals 1 through 10 following the ”T” and ”F”, ”0”, ”W” indicate the basic treatment of the heat treatable alloys as follows:

-F:	**As fabricated**
-0:	**Annealed Solution heat treated (unstable condition)**
-T1:	**Cooled from an elevated temperature shaping process and naturally aged to a substantially stable condition**
-T2:	**Annealed (cast product only)**
-T3:	**Solution heat treated and then cold worked**
-T4:	**Solution heat treated and naturally aged**
-T5:	**Cooled from elevated temperature shaping process and then artificially aged**
-T6:	**Solution heat treated and then artificially aged**
-T7:	**Solution heat treated and then overaged/stabilized**
-T8:	**Solution heat treated, cold worked, and then artificially aged**
-T9:	**Solution heat treated, artificially aged, then cold worked**
-T10:	**Cooled from an elevated temperature shaping process, cold worked and then artificially aged**

Additional digits may be added such as,

(1) "-T1" through "-T10" to indicate a variation in treatment such as straightening after heat treatment.

(2) "-F", "-O" and "-W" are not followed by second digits.

For Example: Aluminum Alloy 7075**-T6** is a copper-zinc aluminum alloy, solution heat treated and artificially aged.

e. **CLAD ALLOYS**. The heat treatable alloys in which copper or zinc are major alloying constituents, are less resistant to corrosive attack than the majority of non-heat-treatable alloys. To increase the corrosion resistance of these alloys in sheet and plate form, they are often clad with high-purity aluminum, a low magnesium-silicon alloy, or an alloy containing **1** percent zinc. The cladding is usually from 2-1/2 to 5 percent of the total thickness on each side or one side.

7. **CLASSIFICATION OF MAGNESIUM ALLOYS.**

8. **BASIC CLASSIFICATION.**

a. The current system used to identify magnesium alloys is a two letter, two or three digit number designation in that order. The letters designate the major alloying elements, (arranged in decreasing percentage, or in alphabetical order if the elements are of equal amounts), followed by the respective digital percentages of these elements. The percentage is rounded off to the nearest whole number or if a tolerance range of the alloy is specified, the mean of the range (rounded off to nearest whole number) is used. A suffix letter following the percentage digits denotes the latest qualified revision of the alloy.

For example: Magnesium Alloy Designated as AZ**92A** would consist of **9%** (mean value) aluminum and **2%** (mean value) zinc as the major alloying elements. The suffix "**A**" indicates this is the first qualified alloy of this type.

b. Some of the letters used to designate various alloying elements are:

A	Aluminum
E	Rare earth
H	Thorium
K	Zirconium
M	Manganese
Z	Zinc

9. **TEMPER DESIGNATION OF MAGNESIUM ALLOYS.**

a. The temper (hardness) designation is similar to the one used for heat treatable aluminum alloys. The hyphenated suffix symbol which follows an alloy designation denotes the condition of temper.

b. The meaning of the symbols are as follows:

-AC	As-casted
-F	As-fabricated
-O	Annealed
-W	Solution heat treated (unstable temper)
-T2	Annealed (cast product only)
-T3	Solution heat treated and then cold worked
-T4	Solution heat treated
-T5	Artificially aged only
-T6	Solution heat treated and then artificially aged

10. **HEAT TREATMENT OF STEEL.**

a. **HEAT AFFECTED ZONE (HAZ).** The properties of the metal adjacent to the weld joint are changed during welding. The metal at HAZ does not actually melt but it can reach temperatures close to the melting point therefore altering structural and physical properties, which is generally harmful and should be taken into consideration when dealing with the ultimate tensile strength of a welded joint.

b. **STRESS RELIEF HEAT TREATMENT.** Welding a part usually results in localized residual stresses that sometimes approach levels of the yield strength of the metal. This will eventually distort or crack the part. Stress relief heat treatment is utilized to relieve this stress that is locked in the part after welding. Typical stress relief temperatures for low alloy steel are attained by uniformly heating the part in a temperature range of 1100°F - 1200°F, holding at this temperature for a predetermined time followed by uniform cooling to room temperature.

c. **ANNEALING.** Annealing is performed to soften the part to improve machinability as well as dimensional stability. It consists of heating to and holding at a certain temperature followed by cooling to room temperature at a different rate. The higher the carbon content, the lower the annealing temperature.

For example: The annealing temperature of low carbon steel is 1575°F - 1650°F compared to 1450°F - 1600°F for medium carbon steel.

d. **HARDENING.** The carbon content of steel determines the maximum attainable hardness. Therefore, the hardening of steel is the art of controlling the distribution of carbides in the steel. It is accomplished by heating the

part to an elevated temperature, then cooling it rapidly (called quenching) in oil or water. The carbides are precipitated as very fine particles, which is associated with high hardness of the steel.

e. **NORMALIZING.** A process in which an iron-base alloy is heated to a temperature above the transformation range and subsequently cooled in still air at room temperature.

f. **TEMPERING.** The steel that has been hardened by rapid cooling or quenching is often harder than necessary and too brittle for most purposes. It also contains residual stresses arising from the quenching. In order to relieve the stress and reduce the brittleness or restore toughness, the hardened steel is usually tempered. Tempering consists of heating the steel to a 370°F- 1100°F range depending on the desired hardness. The higher the tempering temperature, the softer the steel becomes. In other words, as the tempering temperature increases, the toughness increases, and hardness decreases.

g. **SURFACE HARDENING.** Gears must have very hard teeth to prevent wear, but at the same time, they require softer and tougher cores to absorb impact loads during operation. Case hardening or surface hardening produces a hard wear resistance surface but leaves a tough core for this type of application. Since low carbon steel cannot be hardened largely by the hardening process, hardening of the surface or case is accomplished by increasing the carbon content on the surface by the case hardening process. The depth of the portion into which the carbon has been diffused is called case depth. Welding is not recommended on case hardened parts.

11. **HARDNESS TESTING.**

a. Hardness testing is an important tool in determining the results of the heat treatment as well as the condition of the metal before heat treatment and must, therefore, be carefully considered in connection with this work. The most common hardness testers in general use are: Brinell, Rockwell and Vickers. In certain hardness ranges, values from these testers can be interchangeable.

b. Hardness values can give in formation about the metallurgical changes caused by welding.

c. In the case of premium and high carbon steels and cast iron, the heat affected zone or weld junction may become hard and brittle because of the formation of marten site. Hardness values in a welded joint are usually sensitive to such conditions of welding, as

(1) The process used.

(2) Heat input.

(3) Preheat or interpass temperature.

(4) Electrode composition.

(5) Plate thickness.

d. Hardness values indicate whether the correct welding technique and pre and post heat treatments have been carried out. The hardness of welds is particularly important if the welds must be machined.

12. **METHODS OF HARNESS TESTING.**

a. Various commonly used test methods for finding hardness are:

(1) ASTM E10 - Standard Test Method for Brinell Hardness of Metallic Materials

(2) ASTM E18 - Standard Test Methods for Rockwell Hardness of Metallic Materials

(3) ASTM E92 - Standard Test Method for Vickers Hardness of Metallic Materials

b. Vickers pyramid and Shore Scleroscope methods may also be used to find hardness. The welded specimen in whose case hardness is to be tested is ground, polished or polished and etched to show clearly the weld metal area. Hardness is determined on specific areas of interest, including the weld center line, face or root regions of the weld deposit, the heat affected zone and the base metal.

c. Brinell Hardness Test - It consists of pressing a hardened steel ball into a test specimen. According to ASTM 10 specifications, a 10 mm diameter ball is used for the purpose. Lower loads are applied for measuring hardness of soft materials and vice versa.

13. **PROCEDURE OF HARDNESS TESTING.**

a. Specimen is placed on the anvil; the hand wheel is rotated so that the specimen along with the anvil moves up and contacts with the ball. The desired load is applied mechanically (by a gear driven screw) or hydraulically (by oil pressure) and the ball presses into the specimen.

b. The diameter of the indentation made in the specimen by the pressed ball is measured by the use of a micrometer microscope, having a transparent engraved scale in the field of view.

c. The indentation diameter is measured at two places at right angles to each other, and the average of the two readings is taken. The Brinell hardness number (BHN) which is the pressure per unit surface area of the indentation in kg per square meter, is calculated as follows:

$$BHN = 2 P / [\pi D / (D - (D^2 - d^2)^{1/2})]$$

BHN = Brinell Hardness Number
P = Load on the indenting tool (kg)
D = Diameter of steel ball (mm)
d = Measure diameter at the rim of the impression (mm)

e. Rockwell Hardness Testing - Rockwell hardness testing differs from Brinell testing in that the indenters and the loads are smaller and therefore the resulting indentation on the specimen is smaller and shallower. Rockwell testing is suitable for materials having hardness beyond the scope of Brinell testing. Rockwell testing is faster as compared to Brinell testing because diameter of indentation need not be measured; the Rockwell machine gives arbitrary direct reading. Unlike Brinell testing, rockwell testing needs no surface preparation (polishing, etc.) of the specimen whose hardness is to be measured.

14. **PROCEDURE FOR MEASURING HARDNESS.**

a. Test piece is placed upon the machine. The machine dial is showing any reading.

b. Hand wheel is turned, thereby raising the test piece up against the steel ball indenter till the needle on the dial reads zero. This applies minor load.

c. Major load is applied by pressing the crank provided on the righthand side of the machine (not shown).

d. Crank is turned in the reverse direction thereby withdrawing major load but leaving minor load applied.

e. Hand wheel is rotated and the test piece is lowered.

15. **RELATIONSHIP BETWEEN HARDNESS AND TENSILE STRENGTH.**

a. The approximate relationship between the tensile strength and hardness is indicated in Table 3. This table is to be used as a guide and is usually applied to the plain carbon and low alloy steels and to the metals with tensile strengths greater than 100,000 psi.

b. The tensile strength-hardness relation ship is quite uniform for parts which are sufficiently large and rigid to permit obtaining a full depression of a flat surface without deflection of the piece. For cylindrical parts of less than one inch in diameter, and all tubing, the Rockwell reading will be lower because the part has a tendency to yield on pressure and become egg-shaped. Therefore, a correction factor has to be added to obtain a correct hardness.

c. Any process which affects the surface such as buffing and plating, or the presence of decarburized, or porous areas and hard spots, will affect the corresponding relationship between hardness and tensile strength. Therefore, these surfaces must be adequately removed by sanding or grinding before the measurements are made.

> ***For Example:*** The part measured Rockwell C hardness 40. What is the approximate tensile strength of this part?
>
> ***Solution:*** From Table 3, cross over from 40 in the C scale and the approximate tensile strength is 181 KSI or 181,000 psi.

d. Refer to ASTM E140, “Standard Hardness Conversion Tables for Metals Relationship Among Brinell Hardness, Vickers Hardness, Rockwell Hardness, Superficial Hardness, Knoop Hardness, and Scleroscope Hardness” for more information regarding the relationships between metal hardness’.

Table 3. Hardness Table

APPROXIMATE HARDNESS - TENSILE STRENGTH RELATIONSHIP OF CARBON AND LOW ALLOY STEELS					
Rockwell		Vickers Diamond Pyramid 50 Kg Load	Brinell 3000 Kg Load - 10 mm Ball		Tensile Strength 1000 lb. per sq. in.
C	B				
C150 Kg Load	100 Kg Load 1/16 Ball		Tungsten Carbide Ball	Steel Ball	
67		918	820	717	
66		884	796	701	
65		852	774	686	
64		822	753	671	
63		793	732	656	
62		765	711	642	
61		740	693	628	
60		717	675	613	
59		694	657	600	
58		672	639	584	
57		650	621	574	
56	121.3	630	604	561	
55	120.8	611	588	548	
54	120.2	592	571	536	
53	119.6	573	554	524	283
52	119.1	556	538	512	273
51	118.5	539	523	500	264
50	117.9	523	508	488	256
49	117.4	508	494	476	246
48	116.8	493	479	464	237
47	116.2	479	465	453	231
46	115.6	465	452	442	221
45	115.0	452	440	430	215
44	114.4	440	427	419	208
43	113.8	428	415	408	201
42	113.3	417	405	398	194
41	112.7	406	394	387	188
40	112.1	396	385	377	181
39	111.5	386	375	367	176
38	110.9	376	365	357	170
37	110.4	367	356	347	165
36	109.7	357	346	337	160
35	109.1	348	337	327	155
34	108.5	339	329	318	150
33	107.8	330	319	309	147
32	107.1	321	310	301	142
31	106.4	312	302	294	139
30	105.7	304	293	286	136
29	105.0	296	286	279	132
28	104.3	288	278	272	129

Table 3. Hardness Table (Cont)

APPROXIMATE HARDNESS – TENSILE STRENGTH RELATIONSHIP OF CARBON AND LOW ALLOY STEELS					
Rockwell		Vickers Diamond Pyramid 50 Kg Load	Brinell 3000 Kg Load – 10 mm Ball		Tensile Strength 1000 lb. per sq. in.
C	B				
C150 Kg Load	100 Kg Load 1/16 Ball		Tungsten Carbide Ball	Steel Ball	
27	130.7	281	271	265	126
26	102.9	274	264	259	123
25	102.2	267	258	253	120
24	101.5	261	252	247	118
23	100.8	255	246	241	115
22	100.2	250	241	235	112
21	99.5	245	236	230	110
20	98.9	240	231	225	107
19	98.1	235	226	220	104
18	97.5	231	222	215	103
17	96.9	227	218	210	102
16	96.2	223	214	206	100
15	95.5	219	210	201	99
14	94.9	215	206	197	97
13	94.1	211	202	193	95
12	93.4	207	199	190	93
11	92.6	203	195	186	91
10	91.8	199	191	183	90
9	91.2	196	187	180	89
8	90.3	192	184	177	88
7	89.7	189	180	174	87
6	89	186	177	171	85
5	88.3	183	174	168	84
4	87.5	179	171	165	83
3	87	177	169	162	82
2	86	173	165	160	81
1	85.5	171	163	158	80
0	84.5	167	159	154	78
	83.2	162	153	150	76
	82	157	148	145	74
	80.5	153	144	140	72
	79	149	140	136	70
	77.5	143	134	131	68
	76	139	130	127	66
	74	135	126	122	64
	72	129	120	117	62
	70	125	116	113	60
	68	120	111	108	58
	66	116	107	104	56
	64	112	104	100	54

Table 3. Hardness Table (Cont)

APPROXIMATE HARDNESS – TENSILE STRENGTH RELATIONSHIP OF CARBON AND LOW ALLOY STEELS					
Rockwell		Vickers Diamond Pyramid 50 Kg Load	Brinell 3000 Kg Load – 10 mm Ball		Tensile Strength 1000 lb. per sq. in.
C	B				
C150 Kg Load	100 Kg Load 1/16 Ball		Tungsten Carbide Ball	Steel Ball	
	61	108	100	96	52
	58	104	95	92	50
	55	99	91	87	48
	51	95	86	83	46
	47	91	83	79	44
	44	88	80	76	42
	39	84	76	72	40
	35	80	72	68	38
	30	76	67	64	36
	24	72	64	60	34
	20	69	61	57	32
	11	65	57	53	30
	0	62	54	50	28

ORGANIZATIONAL, INTERMEDIATE AND

DEPOT MAINTENANCE

BASE METAL GROUPS

Reference Material

None

Alphabetical Index

Subject Page No.

General.....2
Metal Groupings.....2

Record of Applicable Technical Directives

None

NOTE

This Work Package contains GUIDANCE information to supplement higher order technical document or instructions.

1. **GENERAL.**

a. The classification of metals by base metal groups is presented in Table 1.

b. Legacy coding of metal groups used a 'small' letter 'a' or 'b' to designate special alloying within a group. For example, Carbon Steel was classified as Group Ia while Alloyed Carbon Steel was designated as Group Ib. This meant that welders who certified in the subgroup 'b' were automatically certified in subgroup 'a'. Those designations are no longer in use and metal groups with two designations 'a' and 'b' are combined hereon.

c. Each metal is grouped by the primary Roman Numeral designation with respect to the legacy designations. Included in the table, where possible, the corresponding Unified Number System (UNS) and common designators are provided.

d. These tables are not all inclusive and provides a reference to commonly defined metals and metal groupings.

For example: UNS G41300 equate to AISI 4130 alloy steel and UNS S41000 equates to 410 stainless steel.

2. **METAL GROUPINGS.**

a. The complete listing of metal groups by base metal is provided in Table 1. Welders may certify or recertify on any metal listed in each group.

b. Weld schools are generally set up with a specific selection of metal groups and certified welders may choose to use those metals for recertification.

Table 1. Classification of Metals by Base Metal Groups

BASE METALS GROUP I - CARBON STEELS					
UNS	**ASTM Specification**	**AISI**	**SAE**	**AMS No.**	**Common Name**
G10060	A29, A510, A545	1006	J403		Carbon Steel
G10080	A29, A510, A519	1008	J403		Carbon Steel
G10090	A29, A510, A519	1009	J403		Carbon Steel
G10100	A29, A510, A519	1010	J403	5040	Carbon Steel
G10110	A29, A510, A519	1011	J403		Carbon Steel
G10120	A29, A510, A519	1012	J403		Carbon Steel
G10130	A29, A510, A519	1013	J403		Carbon Steel
G10150	A29, A510, A519	1015	J403	5060	Carbon Steel
G10160	A29, A510, A519	1016	J403		Carbon Steel
G10170	A29, A510, A519	1017	J403		Carbon Steel
G10180	A29, A510, A519	1018	J403	5069	Carbon Steel
G10190	A29, A510, A519	1019	J403		Carbon Steel
G10200	A29, A510, A519	1020	J403	5045	Carbon Steel
G10210	A29, A510, A519	1021	J403		Carbon Steel
G10220	A29, A510, A519	1022	J403	5070	Carbon Steel
G10230	A29, A510, A519	1023	J403		Carbon Steel
G10250	A29, A510, A519	1025	J403	5075	Carbon Steel
G10260	A29, A510, A519	1026	J403		Carbon Steel
G10290	A29, A510, A519	1029	J403		Carbon Steel
G10300	A29, A510, A519	1030	J403		Carbon Steel
G10330	A29, A510, A519	1033	J403		Carbon Steel
G10340	A29, A510, A519	1034	J403		Carbon Steel
G10350	A29, A510, A519	1035	J403	5080	Carbon Steel
G10370	A29, A510, A519	1037	J403		Carbon Steel
G10380	A29, A510, A519	1038	J403		Carbon Steel
G10390	A29, A510, A519	1039	J403		Carbon Steel
G10400	A29, A510, A519	1040	J403		Carbon Steel
G15220	A29, A510, A510	1522	J403		Carbon Steel
G15240	A29, A510, A510	1524	J403		Carbon Steel
G15270	A29, A510, A510	1527	J403		Carbon Steel
K01200	A178, A179				Carbon Steel
K01201	A192, A226				Carbon Steel
K01501	A414				Carbon Steel
K01502	A730				Carbon Steel
K01504	A161				Carbon Steel
K01506	A539, A587				Carbon Steel
K01601	A131				Carbon Steel
K01700	A285				Carbon Steel
K01701	A662				Carbon Steel
K01800	A516				Carbon Steel
K01801	A131				Carbon Steel
K01802	A633				Carbon Steel
K01807	A214, A556, A557				Carbon Steel
K02000	A730				Carbon Steel
K02001	A284, A515				Carbon Steel

Table 1. Classification of Metals by Base Metal Groups (Cont)

BASE METALS GROUP I - CARBON STEELS (CONT)					
UNS	**ASTM Specification**	**AISI**	**SAE**	**AMS No.**	**Common Name**
K02003	A633				Carbon Steel
K02004	A595				Carbon Steel
K02005	A595				Carbon Steel
K02007	A662				Carbon Steel
K02100	A516				Carbon Steel
K02101	A131				Carbon Steel
K02102	A131				Carbon Steel
K02104	A524				Carbon Steel
K02200	A285				Carbon Steel
K02201	A414				Carbon Steel
K02202	A442				Carbon Steel
K02203	A662				Carbon Steel
K02300	A131				Carbon Steel
K02400	A537				Carbon Steel
K02401	A284, A515				Carbon Steel
K02402	A442				Carbon Steel
K02403	A516				Carbon Steel
K02404	A573				Carbon Steel
K02500	A109				Carbon Steel
K02501	A106, A369				Carbon Steel
K02502	A570				Carbon Steel
K02503	A414				Carbon Steel
K02504	A53, A523				Carbon Steel
K02505	A414				Carbon Steel
K02506	A727				Carbon Steel
K02600	A36				Carbon Steel
K02601	A618				Carbon Steel
K02700	A516				Carbon Steel
K02701	A573				Carbon Steel
K02702	A284				Carbon Steel
K02703	A529				Carbon Steel
K02704	A414				Carbon Steel
K02705	A500				Carbon Steel
K02707	A210				Carbon Steel
K02800	A515				Carbon Steel
K02801	A285				Carbon Steel
K02802	A445				Carbon Steel
K02803	A299				Carbon Steel
K02900	A612				Carbon Steel
K03000	A500				Carbon Steel
K03002	A327				Carbon Steel
K03003	A139				Carbon Steel
K03004	A139				Carbon Steel
K03005	A53, A523				Carbon Steel
K03006	A106				Carbon Steel

Table 1. Classification of Metals by Base Metal Groups (Cont)

BASE METALS GROUP I - CARBON STEELS (CONT)					
UNS	**ASTM Specification**	**AISI**	**SAE**	**AMS No.**	**Common Name**
K03007	A557				Carbon Steel
K03008	A333				Carbon Steel
K03009	A350				Carbon Steel
K03010	A139				Carbon Steel
K03011	A350				Carbon Steel
K03012	A139				Carbon Steel
K03013	A381				Carbon Steel
K03100	A31				Carbon Steel
K03101	A515				Carbon Steel
K03102	A414				Carbon Steel
K03103	A414				Carbon Steel
K03200	A696				Carbon Steel
K03300	A455				Carbon Steel
K03501	A106, A210, A234				Carbon Steel
K03502	A181				Carbon Steel
K03503	A178				Carbon Steel
K03504	A105, A695				Carbon Steel
K03505	A557				Carbon Steel
K03506	A266, A541				Carbon Steel
K04001	A372				Carbon Steel
K04700	A21, A383, A730				Carbon Steel
K05001	A266, A649				Carbon Steel
K05200	A21, A730				Carbon Steel
BASE METAL GROUP I - ALLOY STEELS					
UNS	**ASTM Specification**	**AMS No.**	**MIL SPEC**		**Common Name**
G41300	A29, A331, A519	6348	MIL-S-16974		4130
G41350	A29, A331, A519	6352	MIL-S-16974		4135
G41400	A29, A519, A711	6349	MIL-S-16974		4140
G43400	A29, A331, A711	6359	MIL-S-16974		4340
G86300	A29, A331, A519	6280	MIL-S-16974		8630
K24728	A355, A579	6431	MIL-S-8949		D6AC
K44315	A579	6419	MIL-S-8844		300M
K51545	A213, A335				Alloy Steel
K61595	A213, A335				Alloy Steel
K71340	A522, A553				Alloy Steel
K81340	A522, A553				Alloy Steel
K81590	A199, A437				Alloy Steel
K90941	A182, A396				Alloy Steel
K92810	A538		MIL-S-47139		18 Ni Maraging Steel
K93601	A658				Nickel Steel, 36% Ni
T20811	A579, A681	6437	MIL-S-47086		H11

Table 1. Classification of Metals by Base Metal Groups (Cont)

BASE METAL GROUP II - STAINLESS STEELS					
UNS	**ASTM Specification**	**AISI**	**SAE**	**AMS No.**	**Common Name**
K63198	A543, A547		J467	5526	19-9 DL
K63199			J467	5782	19-9 DX
K64299				5784	29-9
R30155	A639, A567			5376	N-155
R30590				5770	S-590
S20100	A412, A429, A666	201	J405		201
S20200	A314, A412, A666	202	J405		202
S20910	A182, A240, A249			5764	22-13-5
S21600	A240, A479, A492				216
S21603	A240, A479, A492				216L
S21900	A276, A314, A412			5561	21-6-9
S21904	A276, A314, A412			5562	21-6-0 LC
S24000	A240, A249, A269				18-3-MN
S30100	A176, A177, A554	301	J405	5517	301
S30200	A167, A240, A276	302	J405	5515	302
S30215	A167, A276, A314	302B	J405		302B
S30400	A167, A276, A314	304	J405	5501	304
S30403	A167, A276, A314	304L	J405	5511	304L
S30409	A182, A213, A312	304H			304H
S30451	A182, A213, A312	304N			304N
S30500	A167, A240, A249	305	J405	5514	305
S30800	A167, A240, A314	308	J405		308
S30900	A167, A240, A314	309	J405		309
S30908	A167, A240, A314	309S	J405	5523	309S
S31000	A167, A182, A314	310	J405		310
S31008	A167, A240, A314	310S	J405	5521	310S
S31500	A669				
S31600	A167, A182, A213	316	J405	5524	316
S31603	A167, A182, A213	316L	J405	5507	316L
S31609	A182, A213, A240				316H
S31651	A182, A213, A240	316N			316N
S31700	A167, A240, A314	317	J405		317
S31703	A167, A240	317L			317L
S32100	A167, A240	321	J405	5510	321
S32109	A182, A240				321H
S32900	A268, A511	329			329
S33100	A182				F-10
S34700	A182, A213, A249	347	J405	5512	347
S34709	A182, A213, A249				347H
S34800	A182, A213, A249	348	J405		348
S34809	A182, A213, A249				348H
S35000	A579, A693		J467	5546	AM 350
S35500	A564, A579, A693		J467	5547	AM 355
S38100	A167, A213, A240				18-18-2
S40300	A176, A276, A314	403	J405		403

Table 1. Classification of Metals by Base Metal Groups (Cont)

BASE METAL GROUP II - STAINLESS STEELS (CONT)					
UNS	**ASTM Specification**	**AISI**	**SAE**	**AMS No.**	**Common Name**
S40500	A176, A240, A314	405	J405		405
S40900	A176, A286, A651	409	J405		409
S41000	A176, A268, A314	410	J405	5504	410
S41008	A176, A240, A473				410S
S41040	A479			5509	XM-30
S41800	A565		J467	5508	Greek Ascoloy
S42000	A276, A314, A473	420	J405	5506	420
S42200	A565	422	J467	5655	422
S42900	A182, A240, A314	429	J405		429
S43000	A182, A240, A314	430	J405	5503	430
S43035	A240, A268, A651	439			HWT, Aqualloy
S44300	A176, A268, A511				443
S44400	A176, A240, A268				444
S44600	A176, A268, A314	446	J405		446
S45000	A564, A693, A705			5763	Custom 450
S45500	A313, A564, A705			5578	Custom 455

BASE METAL GROUP II - PRECIPITATION HARDENING STAINLESS STEELS				
UNS	**ASTM Specification**	**AMS No.**	**MIL SPEC**	**Common Name**
S13800	A564, A693, A705	5629		PH 13-8 Mo
S15500	A564, A693, A705		5658	15-5 PH
S15700	A564, A693, A705	5520	MIL-S-8955	PH 15-7 Mo
S16800	A376, A430			16-8-2-H
S17400	A564, A693, A705	J467	5604	17-4 PH
S17700	A564, A693, A705	5528	MIL-S-25043	17-7 PH
S66286	A453, A638	5525		A286
S66545	A453	5543		W545

BASE METAL GROUP III - NICKEL AND NICKEL-BASE ALLOYS				
UNS	**ASTM Specification**	**AMS No.**	**MIL SPEC**	**Common Name**
N02200	B160, B161, B366			Nickel 200
N02201	B160, B161, B366	5553		Nickel 201
N04400	B127, B163, B164	4544	MIL-N-24106	Monel 400
N06002	B366, B435, B622	5390		Hasteloy X
N06007	B366, B581, B619			Hasteloy G
N06455	B574, B575, B619			Hasteloy C-4
N06600	B136, B166, B366	5540		Inconel 600
N06625	B366, B443, B705	5401	MIL-E-21562	Inconel 625
N06975	B366, B581, B619			Hasteloy G-2
N08020	B366, B462, B464			Carpenter 20Cb3
N08320	B366, B620, B622			Haynes 20 Mod
N08330	B366, B511, B710	5592		RA330
N08800	B366, B514, B564	5766		Incoloy 800
N08810	B366, B514, B564			Incoloy 800H
N08825	B163, B423, B704			Incoloy 825
N08904	B625, B649, B673			Ni-Cr-Mo Alloy

Table 1. Classification of Metals by Base Metal Groups (Cont)

BASE METAL GROUP III - NICKEL AND NICKEL-BASE ALLOYS (CONT)				
UNS	**ASTM Specification**	**AMS No.**	**MIL SPEC**	**Common Name**
N10001	B333, B335, B619	5396	MIL-R-5031	Hasteloy B
N10002	A494, A567	5388	MIL-R-5031	Hasteloy C
N10003	B366, B434, B573	5607		Hasteloy N
N10276	B366, B574, B619			Hasteloy 276
N10665	B366, B619, B626			Hasteloy B2
				Rene 77
				Rene 80
				Udimet 700
N05500		4676	MIL-N-24549	Monel K500
N06601		5715		Inconel 601
N07001	B637	5544		Waspaloy
N07041		5399		Rene 41
N07252	B637	5551		M252
N07263		5872 5886		Nimonic C263 C263
N07500	A567, B637	5384		Udimet 500
N07718	B637, B670	5383	MIL-N-24469	Inconel 718
N07750	B637	5384	MIL-N-24114	Inconel x750
N09706		5605		Inconel 706
N09901		5660		Incoloy 901
				PK-33

BASE METAL GROUP IV - ALUMINUM AND ALUMINUM-BASE ALLOYS					
UNS	**ASTM Specification**	**AMS No.**	**MIL SPEC**	**AA**	**Common Name**
A03560	B26, B108	4217	MIL-F-3922	356.0	356
A91060	B209, B210, B234	4000		1060	1060
A91100	B209, B210, B241	4001	MIL-A-52177	1100	1100
A92014	B209, B210, B241	4028	MIL-A-22771	2014	2014
A92219	B209, B211, B241	4031	MIL-A-22771	2219	2219
A93003	B209, B211, B241	4006	MIL-A-81596	3003	3003
A93004	B209, B221, B548			3004	3004
A95052	B209, B221, B404	4004	MIL-A-81596	5052	5052
A95083	B209, B241, B547	4056	QQ-A-200/4	5083	5083
A95086	B209, B241, B547		QQ-A-200/5	5086	5086
A95154	B209, B210, B547	4018	MIL-C-26094	5154	5154
A95254	B209, B241, B548			5254	5254
A95454	B209, B241, B548		QQ-A-200/6	5454	5454
A95456	B209, B241, B548		QQ-A-200/7	5456	5456
A95652	B209, B241, B548			5652	5652
A96061	B209, B241, B548	4009	QQ-A-200/8	6061	6061
A96063	B210, B241, B361	4156	QQ-A-200/9	6063	6063

Table 1. Classification of Metals by Base Metal Groups (Cont)

BASE METALS GROUP V - MAGNESIUM-BASE ALLOYS					
UNS	**ASTM Specification**	**SAE**	**AMS No.**	**MIL SPEC**	**Common Name**
M10100	B80, B275, B403	J465	4455	QQ-M-55	AM100A
M11311	B90, B107, B275	J466	4375	QQ-M-31	AZ31B
M11610	B91, B107, B275	J466	4350	QQ-M-31	AZ61A
M11800	B91, B107, B275	J466	4360	QQ-M-31	AZ80A
M11910	B93, B94, B275	J465	4490	QQ-M-38	AZ91A
M11920	B93, B94, B275	J465	4434	QQ-M-55	AZ92A
M12330	B80, B199, B275	J465	4396	QQ-M-55	EZ33A
M13210	B90, B91, B275	J466	4363	QQ-M-40	HM21A
M13310	B80, B90, B275	J466	4384	QQ-M-55	HK31A
M13312	B275	J466	4388	MIL-M-8916	HM31A
M13320	B80, B275	J465	4447	QQ-M-55	HZ32A
M14141	B90	J466	4386	MIL-M-46130	LA141A
M16620	B80, B275	J465	4438	QQ-M-56	ZH62A
M18220	B80, B199, B403	J465	4418	QQ-M-56	QE22A

BASE METAL GROUP VI - TITANIUM AND TITANIUM-BASE ALLOYS				
UNS	**ASTM Specification**	**AMS No.**	**MIL SPEC**	**Common Name**
R50250	B265, B337, B338		MIL-T-81556	Titanium CP
R50400	B265, B337, B338	4902	MIL-T-81556	Titanium CP
R50550	B265, B337, B338	4900	MIL-T-81556	Titanium CP
R52400	B265, B337, B338			Titanium
R54520	B265, B348, B367	4910	MIL-T-9046	Ti-5Al-2.5Sn
R54620		4919	MIL-T-9046	Ti-6Al-2Sn-4Ar-2Mo
R54810		4915	MIL-T-9046	Ti-8Al-1Mo-1V
R56210			MIL-T-9046	Ti-6Al-2Sn-4Ar-6Mo
R56260		4981	MIL-T-9047	Ti-6Al-2Cb-1Ta-1Mo
R56320	B337, B338	4943	MIL-T-9047	Ti-3Al-2.5V
R56400	B265, B348, B367	4905	MIL-T-9047	Ti-6Al-4V
R56620		4918	MIL-T-9047	Ti-6Al-6V-2Sn
R58640			MIL-T-9047	Ti-3Al-8V-6Cr-4Mo-4Zr

BASE METAL GROUP VII - COBALT-BASE ALLOYS				
UNS	**ASTM Specification**	**AMS No.**	**MIL SPEC**	**Common Name**
R30006		5373 5387 5388	MIL-R-17131	Stellite 6
R30021	A567	5385		Stellite 21
R30023		5375		Stellite 23
R30027		5378		Stellite 27
R30030		5380		Stellite 30
R30031	A567	5382 5789		Stellite 31

Table 1. Classification of Metals by Base Metal Groups (Cont)

BASE METAL GROUP VII - COBALT-BASE ALLOYS (CONT)				
UNS	**ASTM Specification**	**AMS No.**	**MIL SPEC**	**Common Name**
R30188		5608 5772 5801		HS188
R30605	F90	5537 5759 5796 7236	MIL-R-5031	L605
R30816	A461, A639	5534		S816

ORGANIZATIONAL, INTERMEDIATE AND DEPOT MAINTENANCE WELDING ELECTRODES

Reference Material

American Iron and Steel Institute ..... AISI Series
American Welding Society ..... AWS Series

Alphabetical Index

Subject	Page No.
Bare Electrodes Classification	6
Classification of Electrodes	2
Covered Electrodes Classification	2
ARC Action Obtained with a Light Coated Electrode	5
ARC Action Obtained with a Shielded ARC Electrode	5
Functions of Shielded ARC or Heavy Coated Electrodes	5
Light Coated Electrodes	3
Shielded ARC or Heavy Coated Electrodes	4
Direct Current ARC Welding Electrodes	5
Electrode Defects and their Effect	8
Gas Metal ARC Welding Metal Transfer	6
Globular	8
Pulsed Spray	8
Short-Circuiting	7
Spray Transfer	6
Storing Electrodes	5
Welding Electrodes	2
General	2
GTAW/GMAW	2
SMAW	2

Record of Applicable Technical Directives

None

NOTE

This Work Package contains GUIDANCE information to supplement higher order technical document or instructions.

1. **WELDING ELECTRODES.**

a. **GENERAL**. Welding filler metals can take different forms such as a flux covered electrode, solid wire, cored wire, or straight cut wire.

b. **SHIELDED METAL ARC WELDING (SMAW).** A flux covered electrode is used for the SMAW process. This electrode may have some of the alloying elements within the flux which is mixed with the molten metal to form a compatible alloy upon solidification.

c. **GAS TUNGSTEN ARC WELDING (GTAW)/GAS METAL ARC WELDING (GMAW).** Wire provided for either process may of the same elemental composition and the full alloying effects are derived from the solid wire. Wire designated for GMAW may be used for GTAW, if necessary.

2. **CLASSIFICATION OF ELECTRODES.**

a. The American Welding Society's (AWS) classification number series has been adopted by the welding industry and will be used through this general series manual.

b. For further information regarding the "Description and Intended Uses" of various welding filler metals, refer to the respective AWS weld filler metal specification.

3. **COVERED ELECTRODES CLASSIFICATION.**

a. The covered electrode identification system for steel arc welding is per the AWS system, as follows:

For Example:

- **E** indicates electrode for arc welding.
- The **first two** (or three) digits indicate tensile strength (the resistance of the material to forces trying to pull it apart) in thousands of pounds per square inch, of the deposited metal.
- The **third** (or fourth) digit indicates the position of the weld. 1 is for all positions; 2 is for flat and horizontal positions only; 3 is for flat positions only.
- The **fourth** (or fifth) digit indicates the type of electrode coating and the type of power supply used; alternating or direct current, straight or reverse polarity.
- The types of coating, welding current, and polarity position designated by the fourth (or fifth) identifying digit of the electrode classification are as listed in Table 1.

  *The number **E6010** indicates an arc welding electrode with a minimum stress relieved tensile strength of 60,000 psi. It can be used in all positions; and reverse polarity direct current is required.*

b. The covered electrode identification system for stainless steel arc welding is set up as follows:

For Example:

- **E** indicates electrode for arc welding.

- The **first three digits** indicate the American Iron and Steel Institute (AISI) type of stainless steel.
- The **last two digits** indicate the current and position used.

  *The number **E-308-16** by this system indicates stainless steel type 308; with alternating or reverse polarity direct current; and it is used in all positions.*

c. Nonferrous, Nickel alloy, covered welding electrodes follow a similar convention as follows:

For Example:

- **E** indicates electrode for arc welding.
- The Major alloying elements, Ni, Cr, Fe.
- The last position is a numerical digit and represents the variation to that particular element combination.

  The filler metal ENiCrFe-3 used by this system indicates that the filler metal is a covered electrode made from the primary alloy elements, Nickel (Ni), Chromium (Cr), and Iron (Fe) and is the third composition within that Alloy combination.

Table 1. Coating, Current and Polarity Types 1/

DIGIT	COATING	WELD CURRENT
0	Cellulose sodium	DCRP
1	Cellulose potassium	AC, DCRP, DCSP
2	Titania sodium	AC, DCSP
3	Titania potassium	AC, DCSP, DCRP
4	Iron powder titania	AC, DCSP, DCRP
5	Low hydrogen sodium	DCRP
6	Low hydrogen potassium	AC, DCRP
7	Iron powder iron oxide	AC, DCSP
8	Iron powder low hydrogen	AC, DCRP, DCSP

1/ - as Designated by the Fourth Digit in the Electrode Classification Number

4. **LIGHT COATED ELECTRODES.**

a. Light coated electrodes have a definite composition. A light coating has been applied on the surface by washing, dipping, brushing, spraying, tumbling, or wiping to improve the stability and characteristics of the arc stream.

b. The coating generally serves the functions described below:

c. The coating dissolves or reduces impurities such as oxides, sulfur, and phosphorus.

d. The coating, also changes the surface tension of the molten metal so that the globules of metal leaving the end of the electrode are smaller and more frequent, making the flow of molten metal more uniform.

e. It increases the arc stability by introducing materials readily ionized (i.e., changed into small particles with an electric charge) into the arc stream.

f. Some of the light coatings may produce a slag, but it is quite thin and does not act in the same manner as the shielded arc electrode type slag. The arc action obtained with light coated electrodes is shown in figure 1.

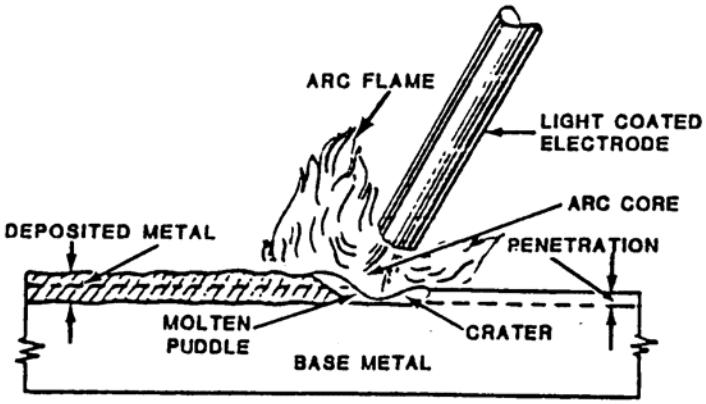

Figure 1. Arc Obtained With a Light Coated Electrode

5. **SHIELDED ARC OR HEAVY COATED ELECTRODES.**

a. Shielded arc or heavy coated electrodes have a definite composition on which a coating has been applied by dipping, extrusion, or other suitable process.

b. The electrodes are manufactured in three general types: those with cellulose coatings; those with mineral coatings; and those whose coatings are combinations of mineral and cellulose. The cellulose coatings are composed of soluble cotton or other forms of cellulose with small amounts of potassium, sodium, or titanium, and in some cases added minerals. The mineral coatings consist of sodium silicate, metallic oxides, clay, and other inorganic substances or combinations thereof. Cellulose coated electrodes protect the molten metal with a gaseous zone around the arc as well as slag deposit over the weld. The mineral coated electrode forms a slag deposit only.

c. The shielded arc or heavy coated electrodes are used for welding steels and cast iron, hard surfacing, and other purposes. The arc action obtained with the shielded arc or heavy coated electrode is shown in figure 2.

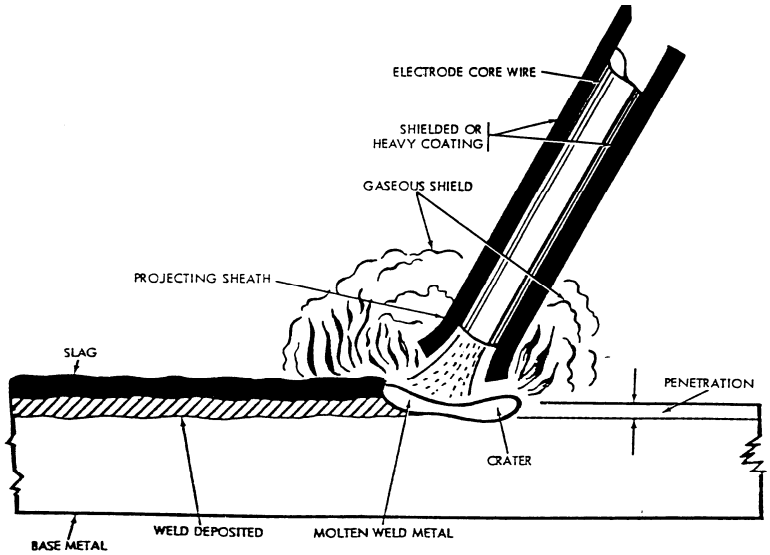

Figure 2. Arc Obtained With a Shielded Arc Electrode

6. **FUNCTIONS OF SHIELDED ARC OR HEAVY COATED ELECTRODES.**

a. These electrodes produce a reducing gas shield around the arc which prevents atmospheric oxygen or nitrogen from contaminating the weld metal. The oxygen would readily combine with the molten metal, removing alloying elements and causing porosity. The nitrogen would cause brittleness, low ductility, and in some cases low strength and poor resistance to corrosion. They reduce impurities such as oxides, sulfur, and phosphorus so that these impurities will not impair the weld deposit.

7. **ARC ACTION OBTAINED WITH A LIGHT COATED ELECTRODE.**

a. They provide substances to the arc which increase its stability and eliminate wide fluctuations in the voltage so that the arc can be maintained without excessive spattering.

b. By reducing the attractive force between the molten metal and the end of the electrode, or by reducing the surface tension of the molten metal, the vaporized and melted coating causes the molten metal at the end of the electrode to break up into fine, small particles.

c. The coatings contain silicates, which will form a slag over the molten weld and base metal. Since the slag solidifies at a relatively slow rate it holds the heat and allows the underlying metal to cool and solidify slowly. This slow solidification of the metal eliminates the entrapment of gases within the weld and permits solid impurities to float to the surface. Slow cooling also has an annealing effect on the weld deposit.

d. The physical characteristics of the weld deposit are modified by incorporating alloying materials in the electrode coating. Also the fluxing action of the slag will produce weld metal of better quality and permit welding at higher speeds.

8. **ARC ACTION OBTAINED WITH A SHIELDED ARC ELECTRODE.**

a The coating insulates the sides of the electrode so that the arc is concentrated into a confined area. This facilitates welding in a deep U or V groove.

b The coating produces a cup, cone, or sheath (figure 2) at the tip of the electrode which acts as a shield, concentrates and directs the arc, reduces heat losses and increases the temperature at the end of the electrode.

9. **DIRECT CURRENT ARC WELDING ELECTRODES.**

a. The manufacturer's recommendations should be followed when a specific type of electrode is being used. In general, direct current shielded arc electrodes are designed either for reverse polarity (electrode positive) or for straight polarity (electrode negative) and are interchangeable. Many, but not all of the direct current electrodes can be used with alternating current. Direct current is preferred for many types of covered nonferrous, bare and alloy steel electrodes. Recommendations from the manufacturer also include the type of base metal for which given electrodes are suitable, corrections for poor fit-ups, and other specific conditions.

b. In most cases reverse polarity electrodes will provide less penetration than straight polarity electrodes, and for this reason will permit greater welding speed. Good penetration can be obtained from either type with proper welding conditions and arc manipulations.

c. Alternating Current Arc Welding Electrodes. Coated electrodes which can be used with either direct or alternating current are available. Alternating current is more desirable while welding in a restricted area or when using the high currents required for thick sections because it reduces arc blow. Arc blow causes blowholes, slag inclusions, and lack of fusion in the weld.

10. **STORING ELECTRODES.**

a. Electrodes must be kept dry. Moisture destroys the desirable characteristics of the coating and may cause excessive spattering and lead to the formation of cracks in the welded area by inducing Hydrogen (H_2) into the weld pool and the Heat Affected Zone (HAZ).

b. In general, electrodes exposed to air for more than two or three hours should be dried by heating in a suitable oven (Figure 3) for two hours at 500°F (260°C). After they have been dried, they should be stored in a suitable container.

c. Consult with the electrode manufacturer specification about drying electrodes which have exceeded the recommended time limits when exposed to the atmosphere.

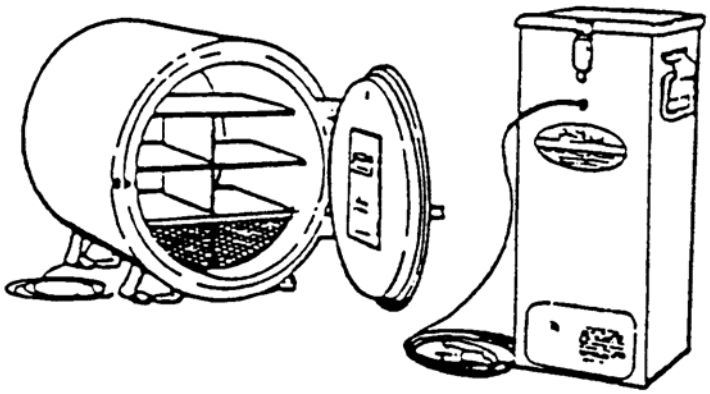

Figure 3. Electrode Drying Oven

11. **BARE ELECTRODES CLASSIFICATION.**

a. Bare wires are designated using the **ER** designation, where, **ER** – designates the Electrode and Rod, followed by the primary alloy and subsequent alloys and a number, indicating separate compositions within the alloy group.

For Example:

- ERNiCrFe-3

b. Bare electrodes are made of wire compositions required for specific applications and have no coatings other than those required in wire drawing. These wire drawing coatings have some slight stabilizing effect on the arc but are otherwise of no consequence.

12. **GAS METAL ARC WELDING METAL TRANSFER.**

13. **SPRAY TRANSFER** (Figure 4).

a. Spray transfer GMAW was the first metal transfer method used in GMAW, best suited for welding aluminum and stainless steel while employing an inert shielding gas and a relatively thick electrode.

b. Molten metal droplets (with diameters smaller than the electrode diameter) are rapidly passed along the stable electric arc from the electrode to the workpiece, essentially eliminating spatter and resulting in a high-quality weld finish.

c. High amounts of voltage and current are necessary, which means that the process involves high heat input and a large weld area and heat-affected zone.

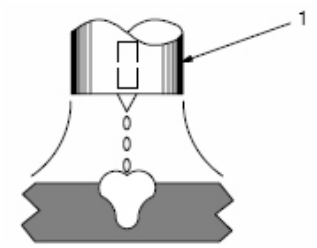

Figure 4. Spray Transfer Mode

CAUTION

This Short-circuiting transfer method is not to be used for structural applications.

14. **SHORT-CIRCUITING.** (Figure 5)

a. Short-circuiting or short-arc GMAW, for carbon steel alloys, in which mixtures of argon/oxygen, argon/carbon dioxide, or 100% carbon dioxide shields the weld. The electrode wire is smaller, and the current is lower than for the globular method. As a result of the lower current, the heat input for the short-arc variation is reduced, making it possible to weld thinner materials while decreasing the amount of distortion and residual stress in the weld area.

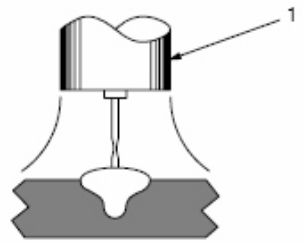

Figure 5. Short Circuiting

b. Short Circuit Cycle (Figure 6).

A - Electrode is short circuited to base metal. No arc, and current is flowing through electrode wire and base metal.

B - Resistance increases in electrode wire causing it to heat, melt and “neck down”.

C - Electrode wire separates from weld puddle, creating an arc. Small portion of electrode wire is deposited which forms a weld puddle.

D - Arc length and load voltage are at maximum. Heat of arc is flattening the puddle and increasing the diameter tip of electrode.

E - Wire feed speed overcomes heat of arc and wire approaches base metal again.

F - Arc is off and the short circuit cycle starts again.

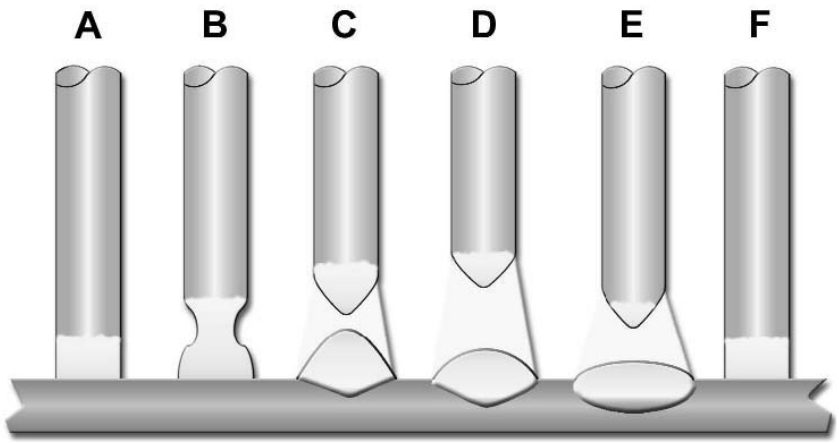

Figure 6. Short Circuiting Cycles

15. **PULSED-SPRAY.**

a. The pulse-spray metal transfer mode is based on the principles of spray transfer but uses a pulsing current to melt the filler wire and allow one small molten droplet to all with each pulse.

b. The pulses allow the average current to be lower, decreasing the overall heat input and thereby decreasing the size of the weld pool and heat-affected zone while making it possible to weld thin work pieces.

c. The pulse provides a stable arc and no spatter, since no short-circuiting takes place. This also makes the process suitable for nearly all metals, and thicker electrode wire can be used as well.

d. The smaller weld pool gives the variation greater versatility, making it possible to weld in all positions.

e. It generates lower heat input and can be used to weld thin work pieces, as well as nonferrous materials.

16. **GLOBULAR** (Figure 7).

a. GMAW with globular metal transfer is often considered the most undesirable of the four major GMAW variations, because of its tendency to produce high heat, a poor weld surface, and spatter.

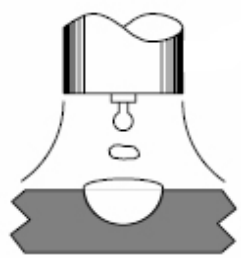

Figure 7. Globular Transfer

17. **ELECTRODE DEFECTS AND THEIR EFFECT.**

a. If certain elements or their oxides are present in electrode coatings the arc stability will be affected. In bare electrodes the composition and uniformity of the wire is an important factor in the control of arc stability. Thin or heavy coatings on electrodes will not completely remove the effects of defective wire.

b. Aluminum or aluminum oxide (even when present in quantities not exceeding 0.01 percent), silicon, silicon dioxide, and iron sulfate cause the arc to be unstable. Iron oxide, manganese oxide, calcium oxide, and iron sulfide tend to stabilize the arc.

c. When phosphorus or sulfur are present in the electrode in excess of 0.04 percent they will impair the weld metal because they are transferred from the electrode to the molten metal with very little loss. Phosphorus causes grain growth, brittleness, and ”cold shortness” (i.e., brittle when below red heat) in the weld, and these defects increase in magnitude as the carbon content of the steel increases. Sulfur acts as a slag, breaks up the soundness of the weld metal, and causes ”hot shortness” (i.e., brittle when above red heat). Sulfur is particularly harmful to bare low carbon steel electrodes with a low manganese content. Manganese promotes the formation of sound welds.

d. If the heat treatment given the wire core of an electrode is not uniform the electrode will produce welds inferior to those produced with an electrode of the same composition that has been properly heat treated.

ORGANIZATIONAL, INTERMEDIATE AND DEPOT MAINTENANCE WELDING MACHINES

Reference Material

None

Alphabetical Index

Subject	Page No.
ARC welding Equipment and Accessories	2
Alternating Current ARC Welding Machines	3
Direct Current Welding Machines	2
General	2
Welding Generating Equipment	2
Constant Current Weld Power	3
Constant Current Characteristics	3
Constant Voltage Weld Power	4
Constant Voltage Characteristics	5
Heat Distribution	3
Power Sources	5
Inverter Power Source	5

Record of Applicable Technical Directives

None

NOTE

This Work Package contains GUIDANCE information to supplement higher order technical document or instructions.

1. **ARC WELDING EQUIPMENT AND ACCESSORIES.**

2. **GENERAL.**

a. The electrical equipment required for arc welding depends on the source from which the electric power is obtained. If the power is obtained from utility lines one or more of the following devices is required: transformers (of which there are several types), rectifiers, motor generators, and control equipment.

b. If public utility power is not available, portable generators driven by gasoline or diesel engines are used.

3. **DIRECT CURRENT WELDING MACHINES.**

a. Direct current rectifier type welding machines have been designed with copper oxide, silicon, or selenium dry plates. These machines usually consist of a transformer to reduce the power line voltage to the required 220/440 volts, 3 phase, 60 cycle input current; and a rectifier to change the alternating current to direct current. Sometimes another reactor is used to reduce ripple in the output current.

b. The direct current welding machine has a heavy duty direct current generator. The generators are made in six standardized ratings for general purposes as described below:

c. The machines rated 150 and 200 amperes, 30 volts, are used for light shielded metal-arc welding and for gas metal-arc welding. They are also used for general purpose job shop work.

d. The machines rated 200, 300, and 400 amperes, 40 volts, are used for general welding purposes by machine or manual application.

e. Machines rated 600 amperes, 40 volts, are used for submerged arc welding and for carbon-arc welding.

4. **WELDING GENERATING EQUIPMENT.**

a. When electric generators powered by internal combustion engines are used inside buildings or in confined areas the engine exhaust must be conducted to the outside atmosphere.

b. Welding generating equipment are gasoline or diesel engines **(*internal combustion engines*)** driving an electric motor or welding generators, most producing 220/440 volts, 3 phase, 60 cycle.

c. The unit is designed for use with an ac-dc conventional, constant current type welding power supply. This means that the gasoline engine-driven arc welding machines issued to field units may be used as both a power source and a welding source.

d. The gasoline and diesel engines should have a rated horsepower in excess of the rated output of the generator. This will allow for the rated overload capacity of the generator and for the power required to operate the accessories of the engine. This simple equation can be used:

$$\mathbf{HP} = \frac{1.25}{746}\,\mathbf{P}$$

Where **HP** is the engine horsepower and **P** is the generator rating in watts. For example, a **20 horsepower** engine would be used to drive a welding generator with a rated **12 kilowatt** output.

$$\mathbf{20}\ \mathrm{HP} = \frac{1.25}{746} \times \mathbf{12000}$$

e. In most direct current welding machines the generator is of the variable voltage type, and is so arranged that the voltage is automatically adjusted to the demands of the arc. However, the voltage may be set manually with a rheostat.

f. The welding current amperage is also manually adjustable and is set by means of a selector switch or series of plug receptacles. In either case the desired amperage is obtained by tapping into the generator field coils. When both voltage and amperage of the welding machine are adjustable the machine is known as a dual control type. Welding machines are also manufactured in which current controls are maintained by movement of the brush assembly.

g. A maintenance schedule should be set up to keep the welding machine in good operating condition.

(1) The machine should be thoroughly inspected every 3 months and blown free of dust with clean, dry, compressed air.

(2) At least once each year the contacts of the motor starter switches and the rheostat should be cleaned and replaced if necessary.

(3) Brushes should be inspected frequently to see if they are making proper contact on the commutator, and that they move freely in the brush holders.

(4) Clean and true the commutator with sandpaper or a commutator stone if it is burned or roughened.

(5) Check the bearings twice a year. Remove all the old grease and replace it with new grease.

5. **ALTERNATING CURRENT ARC WELDING MACHINES.**

a. Practically all of the alternating current arc welding machines in use are of the single operator, static transformer type. For manual operation in industrial applications, machines having 200, 300, and 400 ampere ratings are the sizes in general use. Machines with 150 ampere ratings are sometimes used in light industrial, garage and job shop welding.

b. The transformers are generally equipped with arc stabilizing capacitors. Current control is provided in several ways. One such method is by means of an adjustable reactor in the output circuit of the transformer; in other types, the internal reactions of the transformer are adjustable. A handwheel, usually installed on the front or the top of the machine, makes possible continuous adjustment of the output current without steps.

6. **HEAT DISTRIBUTION.**

a. The screws and bearings on machines with screw type adjustments should be lubricated every 3 months. The same lubrication schedule will apply to chain drives. Contactors, switches, relays, and plug and jack connections should be inspected every 3 months and cleaned or replaced as required.

b. The primary input current at no load should be measured and checked once a year to make certain that the power factor connecting capacitors are working, and that input current is as specified on the nameplate or in the manufacturer's instruction book.

7. **CONSTANT CURRENT WELD POWER.**

a. Constant current welding uses a current that varies slightly with significant changes in voltage.

b. Constant current, or CC, is often used in shielded metal arc welding (SMAW) and gas tungsten arc welding (GTAW).

8. **CONSTANT CURRENT CHARACTERISTICS.**

a. Constant current power sources are used primarily with coated electrodes. This type of power source has a relatively small change in amperage and arc power for a corresponding relatively large change in arc voltage or arc length, thus the name constant current.

b. The characteristics of this power source are best illustrated by observing a graph that plots the volt-ampere curve. As can be seen in Figure 1 (Dash Line), the curve of a constant current machine drops down-ward rather sharply and for this reason, this type of machine is often called a "drooper."

c. In welding with coated electrodes, the output current or amperage is set by the operator while the voltage is designed into the unit. The operator can vary the arc voltage somewhat by increasing or decreasing the arc length. A slight increase in arc length will cause an increase in arc voltage and a slight decrease in amperage. A slight decrease in arc length will cause a decrease in arc voltage and a slight increase in amperage.

9. **CONSTANT VOLTAGE WELD POWER.**

a. Constant Voltage (CV) welding uses a voltage that varies slightly with significant changes in current. As shown in Figure 1 (Solid Line).

b. Constant voltage is often used for gas metal arc welding (GMAW) and flux-cored arc welding (FCAW).

c. An inverter based machine is controlled by a microcontroller, so the electrical characteristics of the welding power can be changed by software in real time updates. Typically the controller software will implement features such as pulsing the welding current, variable ratios and current densities through a welding cycle, variable frequencies, and automatic spot-welding; all of which would be prohibitively expensive in a transformer-based machine but require only program space in software-controlled inverter machine.

10. **CONSTANT VOLTAGE CHARACTERISTICS.**

a. Constant voltage power sources, also known as constant potential, are used in welding with solid and flux cored electrodes, and as the name implies, the voltage output remains relatively constant. On this type of power source, the voltage is set at the machine and amperage is determined by the speed that the wire is fed to the welding gun. Increasing the wire feed speed increases the amperage. Decreasing the wire feed speed decreases the amperage.

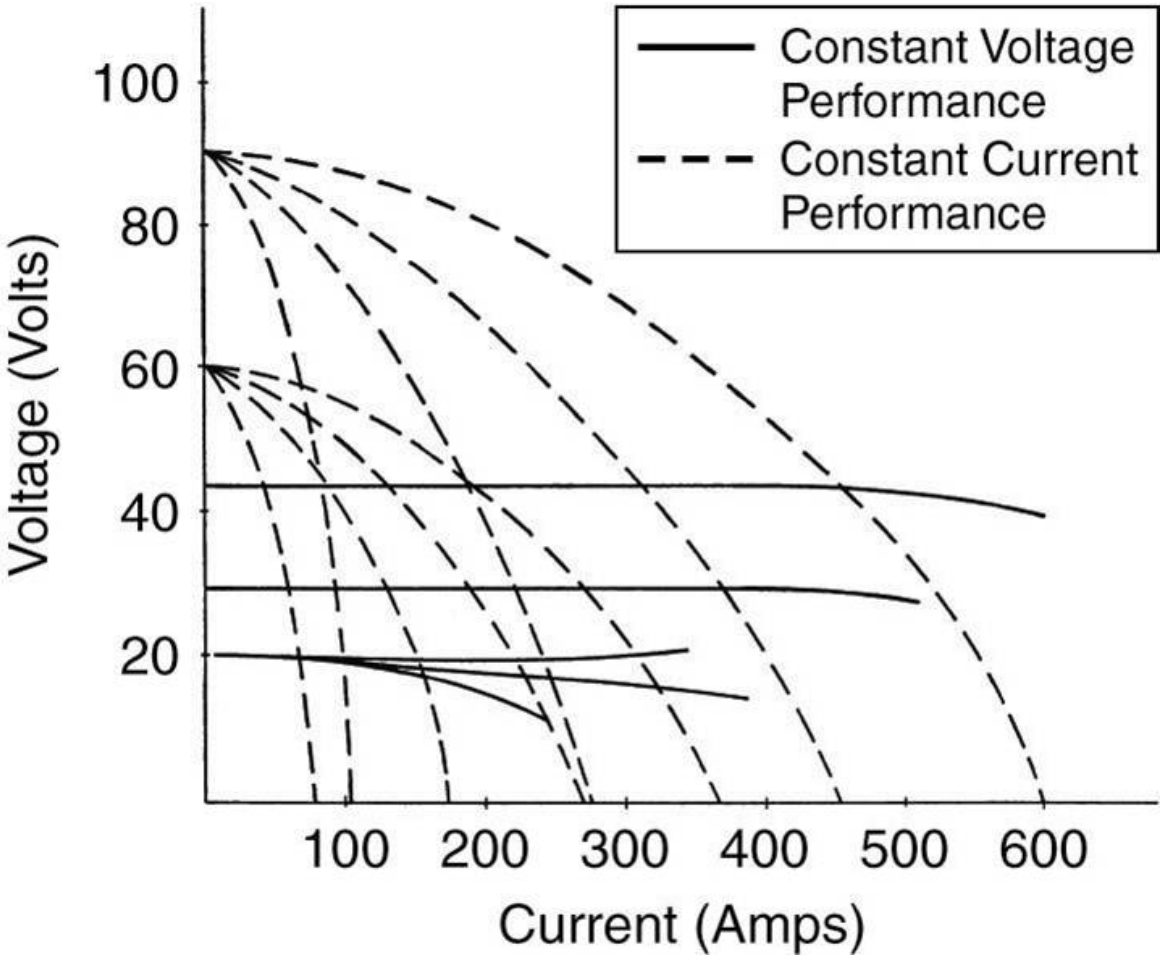

Figure 1. Constant Voltage / Constant Current Graph

b. Arc length plays an important part in welding with solid and flux cored electrodes, just as it does in welding with a coated electrode. However, when using a constant voltage power source and a wire feeder that delivers the wire at a constant speed, arc length caused by operator error, plate irregularities, and puddle movement are automatically

11. **POWER SOURCES.**

a. Typically, power sources, which may be designed to supply power to the wire feeder, have been constructed to operate in either a constant current (CC) mode or a constant voltage (CV) mode.

b. For those welding applications that require a constant current input to the wire feeder, the wire feeder is connected to a CC power source. Conversely, for those welding applications that require a constant voltage at a weld, the wire feeder is connected to a CV power source.

c. For CC mode of operation, the user is able to adjust the speed by which metal filler or consumable electrode is delivered to a weld so as to maintain a desired voltage at the weld.

d. Conversely, for a CV mode of operation, the user may adjust the wire feed speed to maintain a target current level at the weld. Wire feed speed (WFS) and voltage at the weld are inversely related therefore to increase the arc voltage at the weld, the WFS must be decreased and to lower the voltage at the weld, the WFS must be increased. In contrast, WFS and current are directly related and, as such, an increase in WFS will cause an increase in current and vice versa.

12. **INVERTOR POWER SOURCE.**

a. The new welding power source, the Inverter, is a high-power semiconductor, switching power supply, capable of coping with the high loads of arc welding.

b. These supplies generally convert utility power to high voltage and store this energy in a capacitor bank; a microprocessor controller then switches this energy into a second transformer as needed to produce the desired welding current. The switching frequency is very high - typically 10,000 Hz or higher. The high frequency inverter-based welding machines can be more efficient and have better control than non-inverter welding machines.

ORGANIZATIONAL, INTERMEDIATE AND DEPOT MAINTENANCE GENERAL WELDING EQUIPMENT

Reference Material

None

Alphabetical Index

Subject	Page No.
Background	2
Welding Processes	2
Other Welding Processes	2

Record of Applicable Technical Directives

None

NOTE

This Work Package contains GUIDANCE information to supplement higher order technical document or instructions.

NOTE

Authority to weld on a particular aircraft, aircraft part or any support equipment must be obtained before any welding/brazing operation can be attempted. Authorization can be found in applicable maintenance manuals and directives.

1. **BACKGROUND.**

a. Many welding processes are available for the repair and fabrication or manufacture of aviation components, including support equipment. Of these processes, a select few are described within this work package 004 series.

b. This work package is not intended to be all inclusive and only provides basic information concerning the process to setup and use. Specific information related to the actual welding equipment should be consulted and takes precedence over this general series manual.

c. this work package series is organized by welding process providing information to describe the overall function including some details that ensure the process is properly setup for welding.

2. **WELDING PROCESSES.**

a. The common welding processes associated with aviation welding are provided within this work package series.

(1) Gas Tungsten Arc Welding.

(2) Shielded Metal Arc Welding.

(3) Gas Metal Arc Welding.

(4) Oxyacetylene Processes.

(5) Resistance Welding.

(6) Plasma Arc Cutting.

3. **OTHER WELDING PROCESSES.**

a. Welding processes not listed in this work package series may be used when specified or required by the repair technical manual. Specific equipment setup, operation, maintenance and training requirements shall be established by each command incorporating the repair method.

b. Welding processes that currently fall in this category are listed below.

(1) Electron Beam Welding

(2) Laser Beam Welding

ORGANIZATIONAL, INTERMEDIATE AND DEPOT MAINTENANCE GAS TUNGSTEN ARC WELDING PROCESS

Reference Material

None

Alphabetical Index

Subject	Page No.
Gas Tungsten ARC Welding (GTAW) Equipment	2
Gas Tungsten ARC Welding Power Sources	2
Gas Tungsten ARC Welding Principles	2
Gas Tungsten ARC Welding Station	5
Gas Tungsten ARC Welding Techniques	19
Methods of Starting the ARC	18
Selecting and Preparing a Tungsten Electrode	12
Selecting Correct Filler Metal for Use With GTAW	14
Selecting Correct GTAW Torch Nozzle	9
Selecting Correct Shielding Gas Flow Rate for GTAW	8
Selecting Proper Shielding for GTAW	7
Shutting Down the GTAW Station	20

Record of Applicable Technical Directives

None

NOTE

This Work Package contains GUIDANCE information to supplement higher order technical document or instructions.

1. **GAS TUNGSTEN ARC WELDING (GTAW) EQUIPMENT.**

a. GAS TUNGSTEN ARC WELDING (GTAW) is a process used to produce high quality welds in virtually all weldable metals. It is done manually or automatically. Gas tungsten arc welding (GTAW) is also known as Tungsten Inert Gas (TIG) welding. It was originally called Heliarc welding when it was first developed.

b. Welding is done normally with one tungsten electrode, but multiple electrodes have been used in special applications. Gas tungsten arc welding may be done in any welding position. It is used to weld thin walled pipe and tube. The process is also used almost exclusively to weld the root bead in heavy walled pipe in petroleum, chemical, and power generating applications. Filler metal may or may not be required with GTAW. Flange joints on thin metal may be designed for welding without filler metal.

c. Inert gases, specifically, argon are used to shield the GTAW from atmospheric contamination.

d. The welder must manipulate the gas tungsten arc welding torch to control the arc length. The welder must also carefully add the filler metal when doing manual GTAW. Manual gas tungsten arc welding therefore requires more welder skill than gas metal arc welding.

2. **GAS TUNGSTEN ARC WELDING PRINCIPLES.**

a. Gas tungsten arc welding requires the use of a torch, an inert gas, gas regulating equipment, a constant current power supply, and filler metal when required.

b. Direct current (DC) or alternating current (AC) power supplies may be used. Either direct current electrode negative (DCEN/DCSP) or direct current electrode positive (DCEP/DCRP) may be used. When doing GTAW with DCEN, two thirds of the heat generated in the arc is released on the work piece and one third is released at the electrode. In DCEP, two thirds of the heat generated is released at the electrode and one third on the work. When DCEP is used for GTAW, a larger diameter electrode must be used than when DCEN is used. Figure 1 shows how the electrons flow and how the heat is distributed when DCEN, DCEP, or AC is used with GTAW. The current carrying capacity of an electrode using DCEP is only about one tenth that of an electrode using DCEN. DCEN is therefore used most often.

c. Filler metal is added to the arc pool either manually or automatically. When doing manual GTAW, the filler metal is added in much the same way as when doing oxyfuel gas welding. A flange may be bent up on thin metal and used as the filler metal.

d. Using automatic GTAW, metal as thin as .003 in. (.076 mm) may be welded using a flanged joint.

e. The filler metal used for automatic GTAW is usually in the form of spooled wire. The wire is fed into the arc pool as shown in Figure 2. Thicknesses above .02 in. (.51 mm) are generally joined using an added filler metal.

f. Alternating current or direct current electrode positive (DCEP) or direct current reverse polarity (DCRP) is used when surface oxides must be removed. Surface oxides occur on aluminum, magnesium, and some other nonferrous metals. These metal oxides melt at a higher temperature than the base metal. The oxides therefore make it hard to weld the base metal.

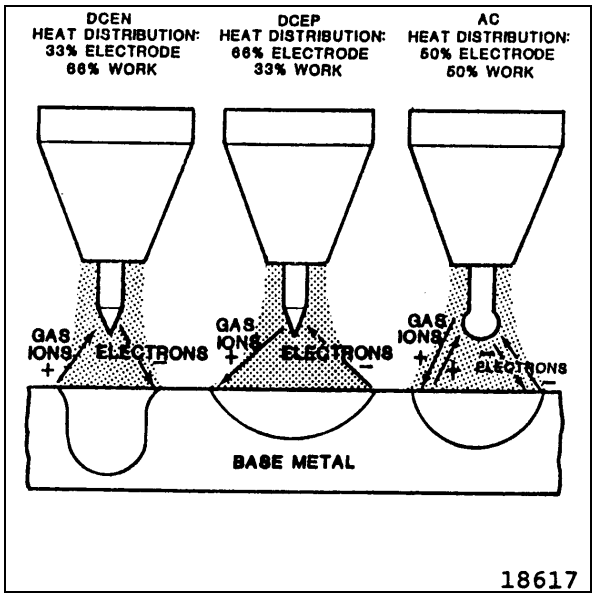

Figure 1. Heat Distribution

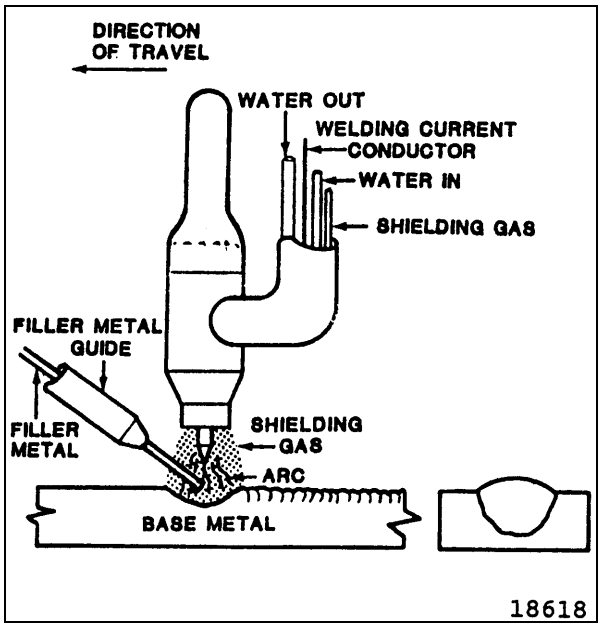

Figure 2. Automatic GTAW

g. Electrons flow from the work to the electrode when DCEP is used and during one-half of the AC cycle. However, positively charged shielding gas ions travel from the nozzle to the negatively charged work; see Figure 1. These shielding gas ions strike the work surface with sufficient force to break up the oxides. DCEP and AC both work well in breaking up the surface oxides on aluminum and magnesium. See Figure 3. AC gives better penetration. AC can also be used with a smaller electrode diameter for a given current flow.

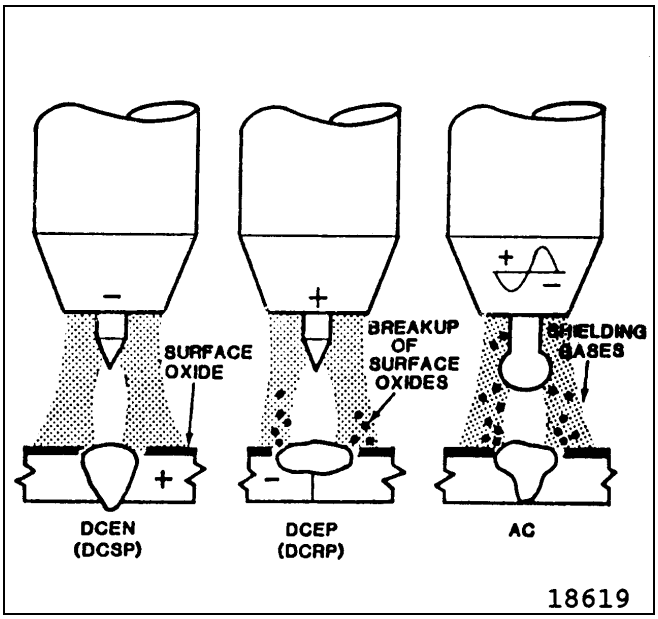

Figure 3. Examples of Current

3. **GAS TUNGSTEN ARC WELDING POWER SOURCES.**

a. Direct current electrode negative (DCEN) (DCSP) is used when the greatest amount of heat is to be on the base metal. DCEN is also used when welding thicker sections and for deepest penetration. See Figure 1. Direct current electrode positive (DCEP) (DCRP) is used to weld thin metal sections. DCEP or AC is used for the best surface cleaning action when welding aluminum or magnesium. An alternating current source is chosen when equal heating is preferred. AC is also used for medium penetration welds.

b. The power source may be able to furnish steady or pulsing current. Pulsing current is the best choice when welding out of position.

c. During half of the alternating current (AC) cycle, the electrode is positive. Electrons do not travel easily from the flat work surface to the relatively small tungsten electrode tip. This may cause a blocking (rectification) or unbalancing of the current flow during the electrode positive half of the AC cycle. See A, Figure 4. Rectification can be avoided or reduced by increasing the open circuit voltage of the welding machine. See B, Figure 4. The alternating current wave form is said to be stabilized when some current flows during the electrode positive half of the cycle. It may also be stabilized by adding a high frequency voltage circuit in series with the welding circuit. This added high frequency circuit provides several thousand volts with an extremely low current or amperage. A high frequency volt age is continually applied in the AC welding circuit for GTAW.

d. High frequency or a higher open circuit voltage will stabilize the AC wave form, but the wave form is still unbalanced. To balance the AC wave form, capacitors are used to increase the current flow during the EP half cycle. Capacitors store electricity during the EN half cycle and release the electricity during the EP half cycle. Through the use of capacitors, a balanced AC wave form is obtained. See C, Figure 4.

e. Gas tungsten arc welding is always done with a power source which furnishes a CONSTANT CURRENT supply. The current setting will be determined by the size of the electrode, metal thickness, shielding gas used, and the type of current supplied.

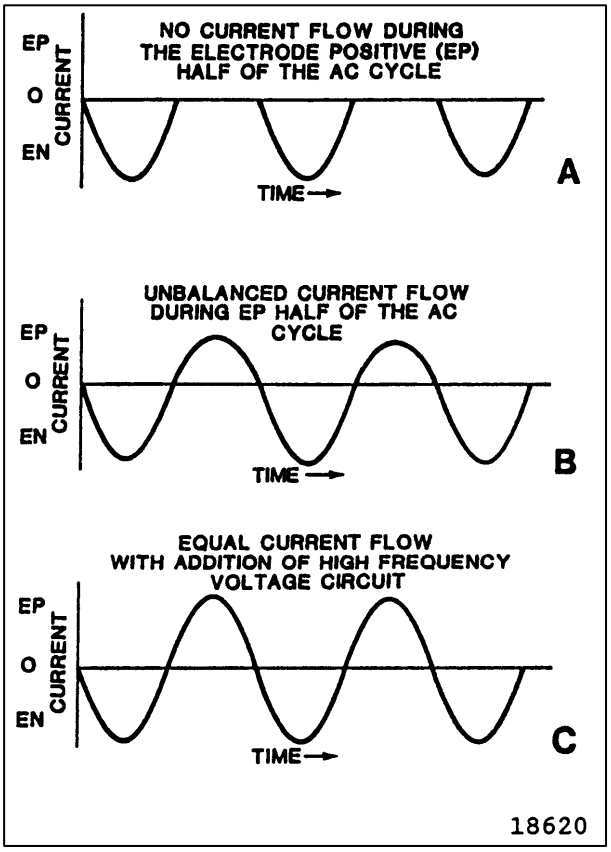

Figure 4. Alternating Current Wave Forms

4. **GAS TUNGSTEN ARC WELDING STATION.**

a. The typical gas tungsten arc welding (GTAW) outfit will contain the following equipment and supplies:

(1) An AC, DC, or CC arc welding machine.

(2) Shielding gas cylinders or facilities to handle liquid gases.

(3) A shielding gas regulator.

(4) A gas flowmeter.

(5) Shielding gas hoses and fittings.

(6) Electrode lead and hoses.

(7) A welding torch (electrode holder).

(8) Tungsten electrodes.

(9) Welding rods.

b. Optional accessories.

(1) A water cooling system with hoses for heavy duty welding operations.

(2) Foot rheostat.

(3) Arc timers.

c. Figure 5 shows a schematic drawing of a gas tungsten arc welding outfit. The booth and exhaust system are not shown in this illustration.

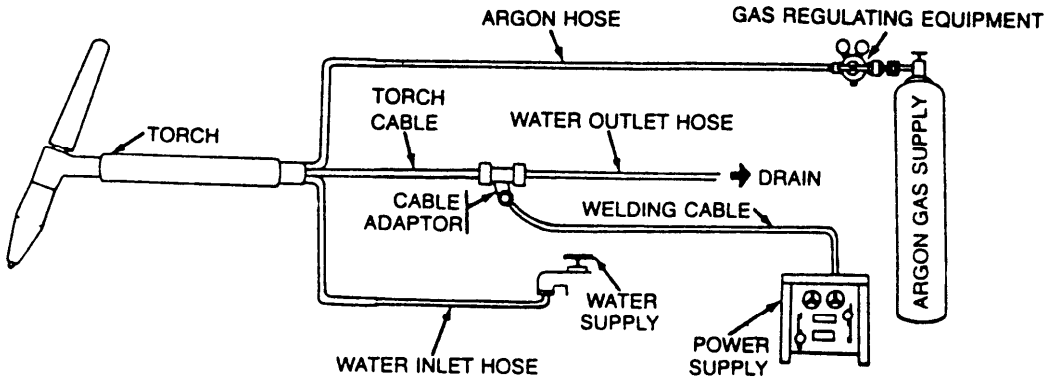

18534

Figure 5. Gas Tungsten Arc Welding Setup

d. The arc welding machine (not shown but adequately described) should be given a brief safety inspection prior to its use. With the main power switch off, check the ground and electrode lead connections for a tight connection on the machine. Check the entire length of each lead for evidence of wear or cuts. These could indicate internal damage to the conducting cables. Keep the leads protected with a steel channel whenever they must run across an aisle way. The ground lead clamp or connection should be checked for a good connection. The contact area of the ground clamp or connection must be clean for the best current flow conditions. All shielding gas connections must be tight. This will prevent expensive gas leaks. Loose connections may also allow air to enter the shielding gas lines. This will cause contamination of the electrode and the weld.

e. A remote control foot switch performs many functions. When the pedal is pressed, the shielding gas and cooling water begin to flow. The switch is used to control the welding current. As the pedal is pressed, more current is supplied to the torch. The pedal can also be used as a current on-off switch without varying the current. If a remote control foot switch is used, the plug must be firmly installed in the arc welder receptacle. A microswitch on the torch handle may also be used to perform these functions.

f. The control panel contains the following controls which are explained below:

(1) The RANGE SELECTOR is used to select a high or low current range.

(2) The CURRENT CONTROL DIAL CONTROL KNOB is used to set the desired current. This dial is marked in white for the high range settings. It is marked in black for the low range settings.

(3) Alternating or direct current may be selected by the setting of the AC/DC SELECTOR SWITCH.

(4) Direct current electrode negative (DCEN) (DCSP) or direct current electrode positive (DCEP) (DCRP) may be selected by the setting of the POLARITY SWITCH.

(5) The POWER SWITCH is used to turn the arc welding machine primary circuit on or off. The machine should not be turned off while the arc is struck. The machine should only be turned on or off while the GTAW torch is hung on an insulated hook

(6) The POST-FLOW TIMER or after flow timer is used to control how long in seconds the shielding gas will flow after the arc is stopped. The gas should flow for 10-15 seconds to keep the hot electrode from becoming contaminated. A good rule to use is to continue the gas flow one second for each 10 amperes of current used.

(7) The VOLTMETER will show open circuit voltage and it will show the closed circuit voltage while welding.

(8) The AMMETER will indicate the current flow while welding and on some machines, the ammeter indicates the maximum in the range setting while not welding.

(9) The CONTACTOR SWITCH has two positions, standard and remote. In the standard position, a switch on the control panel is used to turn the machine's secondary circuit on or off. The standard position is generally used for SMAW. In this position the electrode has open circuit voltage to it. When the switch is in the remote position, a thumb switch on the torch or a remote foot switch is used to turn the secondary welding circuit on or off. In the remote position the secondary current, and the water, and gas flow are started when the thumb switch or foot switch is depressed slightly.

(10) The REMOTE OR CONTROL PANEL CURRENT SWITCH has two positions. In the remote position, the current may be varied at the welding site. In the panel position, the current is changed on the machine panel only.

(11) The HIGH FREQUENCY SWITCH has two positions. In the start position, high frequency is applied to the welding circuit only until the arc is struck. This position is used when DC is used. In the continuous position, high frequency is applied to the welding circuit constantly. This position is used when AC is used for GTAW.

(12) The START CURRENT SWITCH AND CONTROL work together. The control is marked from 0 - 10. This control will set a starting current from low (1) to high (10). After the arc is stabilized, the regular welding current will automatically come into use.

5. **SELECTING PROPER SHIELDING FOR GTAW.**

a. High quality welds using the gas tungsten arc can only be made using either argon (Ar), helium (He), or argon-helium mixtures. Both argon and helium are inert gases. Table 1 describes usage of shielding gases and power sources for different base metals.

b. Argon (Ar) provides a smoother, quieter arc. A lower arc voltage is required and it provides a better cleaning action than helium. Argon is ten (10) times heavier than helium. Argon provides better shielding than helium with less gas.

c. Helium (He) however, provides a higher available heat at the workpiece than does argon. GTAW done with helium gas produces deeper penetration than does argon gas.

Table 1 – Suggested Choices of Shielding Gases and Power Sources for Welding Various Metals

METAL	THICKNESS	MANUAL	AUTOMATIC (MACHINE)
Aluminum Alloys	Under 1/8 in. (3.2 mm)	Ar[1] (AC-HF)	Ar (AC-HF) or He[2] (DCEN)
Magnesium Alloys	Over 1/8 in. (3.2 mm)	Ar (AC-HF)[3]	Ar-He (AC-HF) or He (DCEN)[4]
Copper	Under 1/8 in. (3.2 mm)	Ar-He (DCEN)	Ar-He (DCEN)
	Over 1/8 in. (3.2 mm)	He (DCEN)	He (DCEN)
Nickel & PH Nickel Alloys	Under 1/8 in. (3.2 mm)	Ar (DCEN)	Ar-He (DCEN) or He (DCEN)
Cobalt Alloys	Over 1/8 in. (3.2 mm)	Ar-He (DCEN)	He (DCEN)
Steel, Carbon	Under 1/8 in. (3.2 mm)	Ar (DCEN)	Ar (DCEN)
	Over 1/8 in. (3.2 mm)	Ar (DCEN)	Ar (DCEN) or Ar-He (DCEN)
Steel, Stainless &	Under 1/8 in. (3.2 mm)	Ar (DCEN)	Ar-He (DCEN) or H_2[5] (DCEN)
PH Stainless	Over 1/8 in. (3.2 mm)	Ar-He (DCEN)	He (DCEN)
	Under 1/8 in. (3.2 mm)	Ar (DCEN)	Ar (DCEN) or Ar-He (DCEN)
Titanium Alloys	Over 1/8 in. (3.2 mm)	Ar-He (DCEN)	He (DCEN)

1 - Ar (argon)
2 - He (helium)
3 - AC-HF (alternating current, high frequency)
4 - DCEN (direct current electrode negative, also DCSP)
5 - H_2 (hydrogen)

d. Both argon and helium produce good welds with direct current. Helium is best for use on thicker metal sections than argon because of its higher available heat.

e. Alternating current GTAW cannot be done acceptably with helium gas. AC with argon is suggested only for use on aluminum and its alloys. Argon and helium gas mixtures are used in some applications. These mixtures contain up to 75 percent helium and produce a weld with deeper penetration and provides a good cleaning action.

f. Hydrogen (H_2) may be added to argon when welding stainless steel, nickel-copper, and nickel-based alloys. The addition of hydrogen to argon permits increased welding speeds. Hydrogen is not recommended for use on other metals because it produces hydrogen cracks in the welds. The argon-hydrogen gas mixture contains up to 15 percent hydrogen.

6. **SELECTING CORRECT SHIELDING GAS FLOW RATE FOR GTAW.**

a. The FLOW RATE is the volume of gas flowing. The rate of flow is measured in cubic feet per hour or liters per minute. This flow rate varies with the base metal being welded, the thickness of the base metal, and the position of the welded joint. A higher gas flow rate is required when welding overhead. This is because that argon being heavier than air tends to fall away from the overhead joint.

b. Table 2 lists suggested flow rates for GTAW welding various base metals, thickness and welding positions.

c. After determining the correct gas and flow rate, the flow rate must be properly set on the Flowmeter. The vertical tube gas Flowmeter is most common. See Figure 6 for a schematic of a gas Flowmeter.

d. Before setting the Flowmeter, the shielding gas cylinder must be opened. The procedure for opening the shielding gas cylinder is as follows:

NOTE

When a preset pressure is set on the regulator, no adjusting handle is used.

(1) Turn the regulator adjusting screw outward in a counter clockwise direction. This insures that the regulator is closed. Once the pressure is set, an acorn nut is placed over the adjusting screw. In this case, the regulator is always open.

Table 2 - Suggested Shielding as Flow Rates for GTAW Various Metals, Thicknesses, and Positions

Base Metal	Joint	Thickness	Weld* Position	Flow (CFH)		Flow (L/Min) Argon	Flow (L/Min) Helium
				Argon	Helium		
Aluminum Alloys	Fillet, lap, edge, and corner	1/16	FVH	16		7.55	
			O	20		9.44	
		3/32	FVH	18		8.50	
			O	20		9.44	
	Butt	1/16, 3/32, 1/8	FVHO	20		9.44	
				25		11.80	
	Fillet, lap, edge, and corner	1/8	FVH	20		9.44	
			O	25		11.80	
	Butt	3/16	FVH	25		11.80	
			O	30		14.16	
	Butt	1/4	FVH	30		14.16	
			O	35		16.52	
	Fillet, lap, edge, and corner	3/16, 1/4	FVHO	30		14.16	
				35		16.52	
	Butt, fillet, lap, edge, and corner	3/8	FVH	35		16.52	
			O	40		18.88	
Nickel Alloys		up to max for GTAW (3/8 approx.)		10 - 20	1 1/2 to 3 times the argon flow	4.72 - 9.44	
Copper Alloys		1/16		10 - 15	8 - 12	4.72 - 7.08	3.78 - 5.66
		1/8		14 - 20	10 - 15	6.61 - 9.44	4.72 - 7.08
		3/16	FVH	16 - 22	12 - 18	3.56 - 10.38	5.66 - 8.50
		1/4	O	20 - 30	16 - 25	9.44 - 14.16	3.56 - 11.80
		1/2		25 - 35	20 - 30	11.80 - 16.52	9.44 - 14.16

* Positions - F - Flat, H - Horizontal, V - Vertical, O - Overhead

(2) Open the cylinder valve SLOWLY. Continue to open it until it is fully opened. This is necessary because a back seating valve is used to seal the valve stem from leakage.

(3) If a regulator adjusting screw is used, turn it in to the pressure at which the Flowmeter is calibrated. Most Flowmeter are calibrated and preset at the factory for 50 psig (344.7 kPa). The calibrating pressure should be indicated on the Flowmeter.

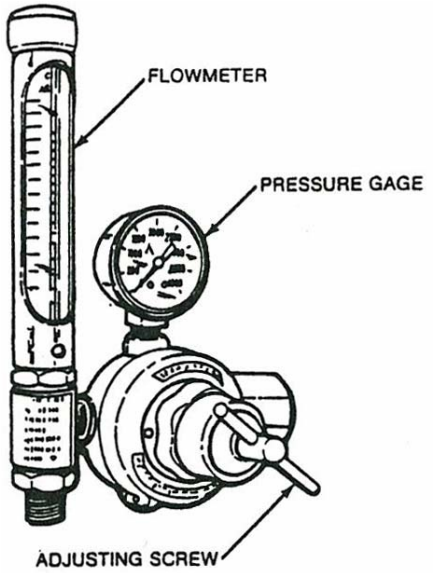

Figure 6. Argon Regulator with Flowmeter.

7. **SELECTING CORRECT GTAW TORCH NOZZLE.**

a. Nozzles used on gas tungsten arc welding torches vary in size and method of attachment. The end of the nozzle which attaches to the torch varies in design. This design variation is necessary to permit attachment to different manufacturers' torches.

b. Most nozzles used for GTAW are manufactured from ceramic materials.

c. The diameter of the nozzle closest to the arc or the exit diameter is manufactured in a variety of sizes; see Figure 7.

d. Manufacturers may put their own distinct part number on each nozzle. In addition, a single digit number is used to identify the exit diameter. This number designates the exit diameter of the nozzle in 1/16 in. (1.6 mm).

For Example: A number 6 nozzle is:

6 x 1/16 in. = 3/8 in. in diameter, or

6 x 1.6 mm = 9.6 mm in diameter

A number 8 nozzle is:

8 x 1/16 in. = 1/2 in. in diameter, or ,

8 x 1.6 mm = 12.8 mm

e. The diameter of the nozzle must be large enough to allow the entire weld area to be covered by the shielding gas. The action of the shielding gas will vary with a given gas flow rate as the diameter of the nozzle changes. With a gas flow rate of 14 cubic feet/hour (CFH) or 6.61 liters/minute (L/min) and a number 8 nozzle, the gas will flow out of the nozzle slowly and gently. With the same flow rate and a number 4 nozzle, the gas will flow out more rapidly and may be blown away from the joint more quickly. However, a low number nozzle will have to be used in a narrow groove in order to reach the bottom of the joint.

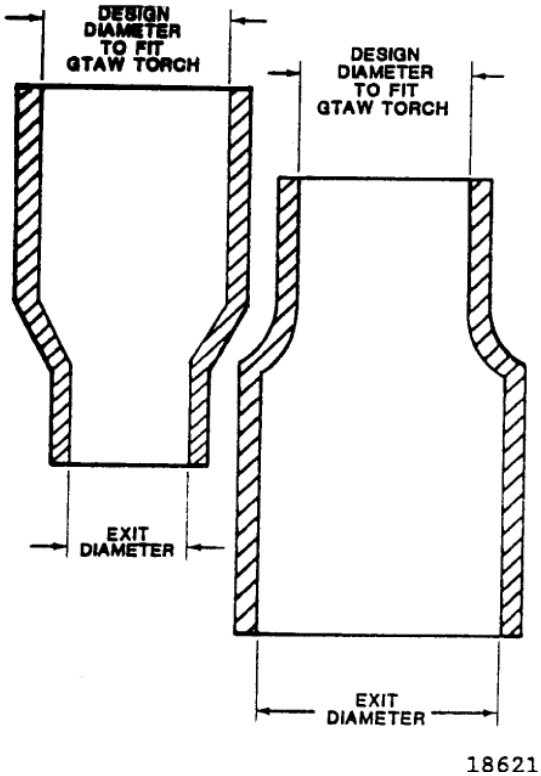

Figure 7. Two Different GTAW Torch Nozzles

f. The choice of the nozzle size is often a compromise which is necessary to meet the requirements of the job. Small diameter nozzles are often used to permit a constant arc length. As an example, see Figure 8. In this case, the important root pass is to be welded. The nozzle is constantly touching the sides of the groove as it is rocked back and forth across the root opening. It is also kept in contact with the groove opening as the weld moves forward slowly. This choice of a small nozzle diameter allows the welder to reach the bottom of the groove. It also allows the welder to keep a constant arc length. A higher gas flow may be needed in this case to compensate for the smaller nozzle diameter.

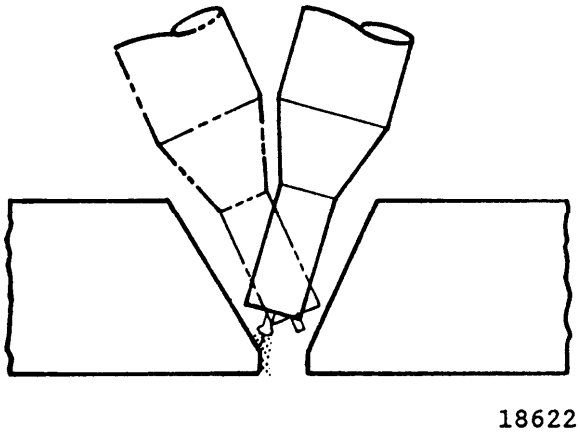

Figure 8. Small Exit Diameter

WARNING

Thoriated tungsten poses a health hazard and should not be used except when mandated by technical instructions. Otherwise, replace 1% or 2% Thoriated Tungsten with 1.5% Lanthanum Tungsten wherever Thoriated Tungsten is specified.

8. SELECTING AND PREPARING A TUNGSTEN ELECTRODE

a. The selection of the correct type and diameter of tungsten electrode is extremely important to performing a successful gas tungsten arc weld. The types, common name, and band color of tungsten electrodes are listed in Table 3.

Table 3. Tungsten Electrodes[1]

TUNGSTEN TYPE	COMMON NAME	BAND COLOR
Pure	EWP	Green
2% Ceria	EWCe-2	Orange
1% Zirconium	EWZr-1	Brown
1% Lanthanum	EWLa-1	Black
1.5% Lanthanum	EWLa1.5	Gold
2% Lanthanum	EWLa-2	Blue

Note: 1. Per AWS A5.12-1998

b. PURE TUNGSTEN ELECTRODES are preferred for AC welding on aluminum or magnesium. They are preferred because they form a ball or hemisphere at the tip when they are heated. This shape reduces current rectification and allows the AC to flow more easily.

c. Pure tungsten electrode will always form a ball at the tip when used with AC. When used with AC, the pure tungsten electrode is not ground to a point and a ball the same size as the electrode diameter forms when the arc is struck. This ball may be up to one and one half times the size of the electrode diameter, but should never exceed that limit. Above the one and one half times the electrode diameter limit, the tungsten in the ball may melt off and fall into the weld. If the ball on the end of the tip is much larger than the electrode diameter, the current may be set too high.

d. Tungsten electrodes of any type must be protected from contamination. The electrode should not be touched to the base metal, weld metal, or filler metal while it is hot. Such contamination prevents the electrode from emitting or receiving electrons effectively. The end of this electrode must be broken off and reshaped. See Figure 9 for the proper ways of retipping a contaminated or split electrode.

e. Tungsten electrodes of any type must be protected from contamination. The electrode should not be touched to the base metal, weld metal, or filler metal while it is hot. Such contamination prevents the electrode from emitting or receiving electrons effectively. The end of this electrode must be broken off and reshaped. See Figure 9 for the proper ways of retipping a contaminated or split electrode.

f. The hot tungsten electrode and metal in the weld area may be contaminated by oxygen and nitrogen in the air and by airborne dirt. To prevent this contamination, a shielding gas is used. The shielding gas is allowed to flow over the electrode and the weld area after the arc is broken. The timing of this shielding gas AFTER FLOW is set on the arc welding machine panel.

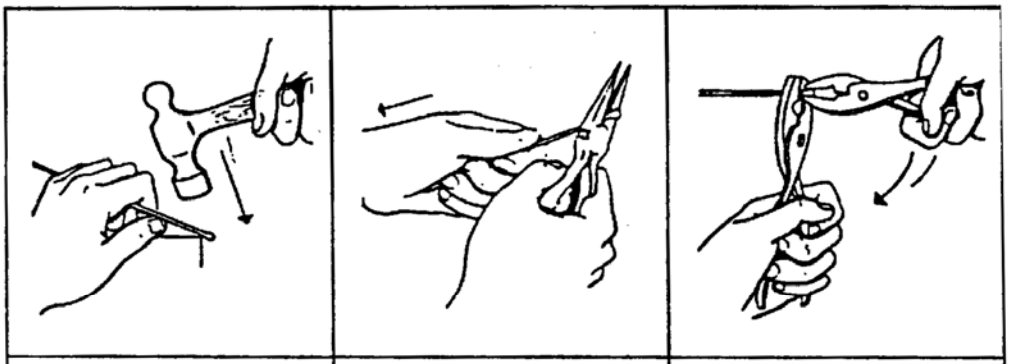		
HAMMER	PLIERS-SHEARING	PLIERS-BREAKING
For 3/32" and larger	For 1/16" and smaller	For 1/8" and smaller
Hold electrode at an angle over edge of a hard surface with the portion to be broken off projecting. Grip the electrode near the edge. With a hammer, strike projecting end close to supporting surface, directing the blow away from the edge.	Grip electrode between plier cutters at exact point to be removed. Hold pliers level with electrode but at a slight angle. As cutting pressure is applied with pliers, pull back slightly with hand grasping electrode.	Hold electrode in pair of standard pliers with only section to be broken extending beyond jaws. Grasp this projecting portion with other pliers. Break off by bending.

Figure 9. Proper Ways to Retip Tungsten Electrodes

g. Table 4 lists the operating current range for each type of tungsten electrode. Pure tungsten electrodes used with AC are sometimes ground to a blunt point. The arc is then struck to form a small ball at the tip. This point must not be sharp or the tip may fall into the crater when the ball forms. However, ground the tungsten to a point or to a near point when welding with high currents.

CAUTION

Safety goggles must be worn while performing any grinding operation.

h. Special grinding wheels should be used for pointing tungsten electrodes. These wheels should be used only for grinding tungsten electrodes. Freedom from contamination is essential.

i. Silicon carbide or alumina oxide grinding wheels are preferred. Alumina oxide cuts more slowly, but lasts longer than silicon carbide wheels. Electrodes should be rough ground on an 80-grit grinding wheel. The finish grinding should be done on a 120-grit wheel. A grinding wheel with an open structure is best because it will run cooler and pick up less contamination.

Table 4 - Suggested Current Range for Various Types and Sizes of Tungsten Electrodes[a]

Electrode Diameter		DCEN (DCSP) Amps	DCEP (DCRP) Amps	Alternating Current Unbalanced Wave Amps		Alternating Current Balanced Wave Amps	
in.	mm	EWX-X	EWX-X	EWP	EWX-X	EWP	EWX-X
0.010	0.30	Up to 15	na[b]	Up to 15	Up to 15	Up to 15	Up to 15
0.020	0.50	5-20	na	5-15	5-20	10-20	5-20
0.040	1.00	15-80	na	10-60	15-80	20-30	20-60
0.060	1.60	70-150	10-20	50-100	70-150	30-80	60-120
0.093	2.40	150-250	15-30	100-160	140-235	60-130	100-180
0.125	3.20	250-400	25-40	150-200	225-325	100-180	160-250
0.156	4.00	400-500	40-55	200-275	300-400	160-240	200-320
0.187	5.00	500-750	55-80	250-350	400-500	190-300	290-390
0.250	6.40	750-1000	80-125	325-450	500-630	250-400	340-525

Notes:
a. All are values based on the use of argon gas. Other current values may be employed depending on the shielding gas, type of equipment and application.
b. na = not applicable
x-x Equates to alloyed tungsten

j. After the electrode diameter has been selected, a collet of the same inside diameter must be placed into the torch. The electrode is then placed into the torch collet. An electrode may be adjusted even with the end of the nozzle. It may extend up to 1/2 in. (approximately 13 mm) beyond the nozzle. However, as a general rule, an extension distance equal to one electrode diameter is an average setting. The extension beyond the nozzle is determined by the shape of the joint. A longer extension permits the welder to see the arc crater better. Higher gas flow rates are required with longer extensions in order to protect the electrode from contamination. The extension distance of the electrode generally should not be greater than the exit diameter of the nozzle.

k. Electrodes should be ground in a lengthwise direction. The grinding marks on the tapered area must run in a lengthwise direction. This method on grinding insures the best current carrying characteristics. Figures 10 and 11 illustrate the suggested method for grinding tungsten electrodes, composite cored, or stranded rod. The filler metal is procured in coils of several hundred feet or in precut lengths. The coiled wire is cut to any desired length by the welder. The pre-cut wire is usually in lengths of 24 or 36 in. (610 or 914 mm).

9. SELECTING CORRECT FILLER METAL FOR USE WITH GTAW.

a. Filler metal used for gas tungsten arc welding (GTAW) is generally bare wire. This filler metal is produced in a solid wire form. Corrosion resisting chromium and chromium-nickel steel filler metal comes as a solid, composite cored, or stranded rod. The filler metal is procured in coils of several hundred feet or in pre-cut lengths. The coiled wire is cut to any desired length by the welder. The pre-cut wire is usually in lengths of 24 or 36 in. (610 or 914 mm).

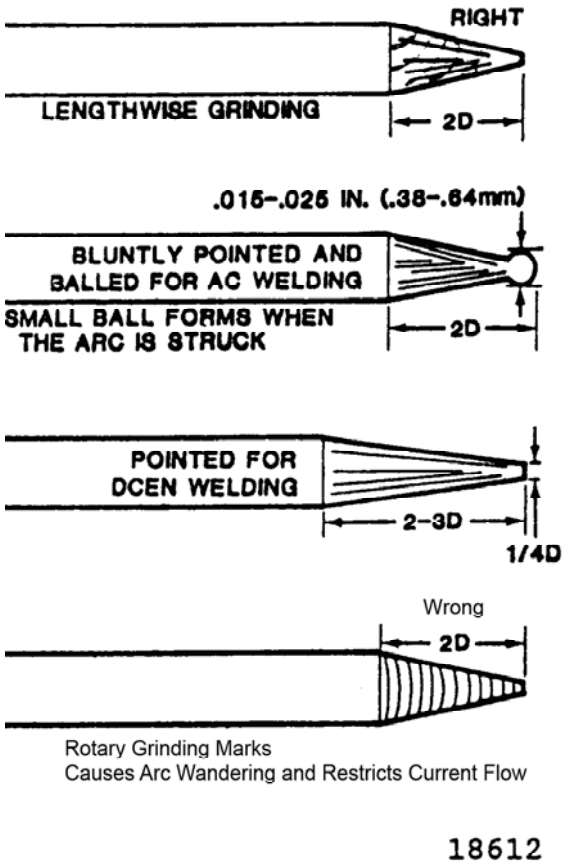

Figure 10. Methods of Grinding Tungsten Electrodes

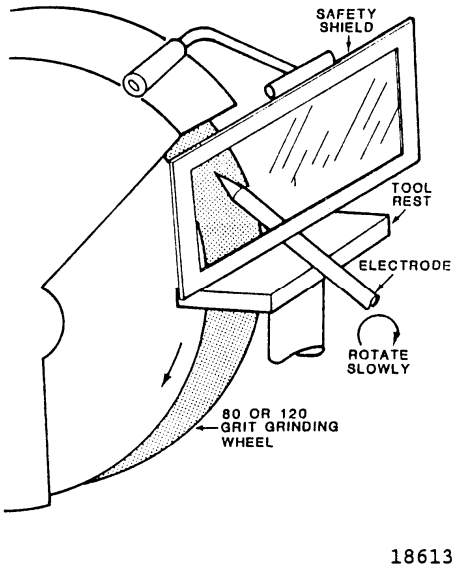

Figure 11. Correct Position for Grinding Tungsten Electrode

b. Steel welding rods should not be copper coated as in oxyfuel gas welding. The copper coating will cause spatter which may contaminate the tungsten electrode.

c. The diameter of the most frequently used filler wire varies from 1/16 in. - 1/4 in. (1.59 - 6.35 mm). Smaller wire is readily available in coils down to .015 in (.38 mm) diameter. Precut filler rods are readily available up to 1/4 in. (6.35 mm). The proper filler rod diameters to use when welding various thicknesses of metals are shown in Tables 5 through 9.

Table 5 - Variables for Manually Welding Mild Steel Using Gas Tungsten ARC and DCEN (DCSP)

Metal Thickness	Joint Type	Tungsten Electrode Diameter	Filler Rod Diameter (If required)	Amperage	Gas		
					Type	Flow CFH	L/Min*
1/16 in. (1.59 mm)	Butt	1/16 in. (1.59 mm)	1/16 in. (1/59 mm	60-70	Argon	15	7.08
	Lap	1/16 in.	1/16 in.	70-90	Argon	15	
	Corner	1/16 in.	1/16 in.	60-70	Argon	15	
	Fillet	1/16 in.	1/16 in.	70-90	Argon	15	
1/8 in. (3.18 mm)	Butt	1/16-3/32 in. (1.59-2.38 mm)	3/32 in. (3.38 mm)	80-100	Argon	15	7.08
	Lap	1/16 in.-3/32 in.	3/32 in.	90-115	Argon	15	
	Corner	1/16 in.-3/32 in	3/32 in.	80-100	Argon	15	
	Fillet	1/16 in.-3/32 in	3/32 in.	90-115	Argon	15	
3/16 in. (4.76 mm)	Butt	3/32 in. (2.38 mm)	1/8 in. (3.18 mm)	115-135	Argon	20	9.44
	Lap	3/32 in.	1/8 in.	140-165	Argon	20	
	Corner	3/32 in.	1/8 in.	115-135	Argon	20	
	Fillet	3/32 in.	1/8 in.	140-170	Argon	20	
1/4 in. (6.35 mm)	Butt	1/8 in. (3.18 mm)	5/32 in. (4.0 mm)	160-175	Argon	20	9.44
	Lap	1/8 in.	5/32 in.	170-200	Argon	20	
	Corner	1/8 in.	5/32 in.	160-175	Argon	20	
	Fillet	1/8 in.	5/32 in.	175-210	Argon	20	

* Liters per minute

Table 6 - Variables for Manually Welding Aluminum Using the Gas Tungsten ARC Using AC and High Frequency

Metal Thickness	Joint Type	Tungsten Electrode Diameter	Filler Rod Diameter (If required)	Amperage	Gas		
					Type	Flow CFH 1/	L/Min*
1/16 in. (1.59 mm)	Butt	1/16 in. (1.59 mm)	1/16 in. (1.59 mm)	60-85	Argon	15	7.08
	Lap	1/16 in.	1/16 in.	70-90	Argon	15	
	Corner	1/16 in.	1/16 in.	60-85	Argon	15	
	Fillet	1/16 in.	1/16 in.	70-100	Argon	15	
1/8 in. (3.18 mm)	Butt	3/32-1/8 in. (2.38-3.18 mm)	3/32 in. (2.38 mm)	125-150	Argon	20	9.44
	Lap	3/32-1/8 in.	3/32 in.	130-160	Argon	20	
	Corner	3/32-1/8 in.	3/32 in.	120-140	Argon	20	
	Fillet	3/32-1/8 in.	3/32 in.	130-160	Argon	20	
3/16 in. (4.76 mm)	Butt	1/8-5/32 in. (3.18-4.0 mm)	1/8 in. (3.18 mm)	180-225	Argon	20	11.80
	Lap	1/8-5/32 in.	1/8 in.	190-240	Argon	20	
	Corner	1/8-5/32 in.	1/8 in.	180-225	Argon	20	
	Fillet	1/8-5/32 in.	1/8 in.	190-240	Argon	20	
1/4 in. (6.35 mm)	Butt	5/32-3/16 in. (4.0-4.76 mm)	3/16 in. (4.76 mm)	240-280	Argon	25	14.16
	Lap	5/32-3/16 in.	3/16 in.	250-320	Argon	25	
	Corner	5/32-3/16 in.	3/16 in.	240-280	Argon	25	
	Fillet	5/32-3/16 in.	3/16 in.	250-320	Argon	25	

1/ - Recommended shielding and backing gas values only. In no circumstances should the Argon go below 15CFH or above 25 CFH.

Table 7 - Variables for Manually Welding Stainless Steel Using the Gas Tungsten ARC and DCEN or DCSP

Metal Thickness	Joint Type	Tungsten Electrode Diameter	Filler Rod Diameter (If required)	Amperage	Gas		
					Type	Flow CFH	L/Min*
1/16 in. (1.59 mm)	Butt	1/16 in. (1.59 mm)	1/16 in. (1.59 mm)	40-60	Argon	15	7.08
	Lap	1/16 in.	1/16 in.	50-70	Argon	15	
	Corner	1/16 in.	1/16 in.	40-60	Argon	15	
	Fillet	1/16 in.	1/16 in.	50-70	Argon	15	
1/8 in. (3.18 mm)	Butt	3/32 in. (2.38 mm)	3/32 in. (2.38 mm)	66-85	Argon	15	7.08
	Lap	3/32 in.	3/32 in.	90-110	Argon	15	
	Corner	3/32 in.	3/32 in.	66-85	Argon	15	
	Fillet	3/32 in.	3/32 in.	90-110	Argon	15	
3/16 in. (4.76 mm)	Butt	3/32 in. (2.38 mm)	1/8 in. (3.18 mm)	100-125	Argon	20	9.44
	Lap	3/32 in.	1/8 in.	124-150	Argon	20	
	Corner	3/32 in.	1/8 in.	100-125	Argon	20	
	Fillet	3/32 in.	1/8 in.	126-150	Argon	20	
1/4 in. (6.35 mm)	Butt	1/8 in. (3.18 mm)	5/32 in. (4.0 mm)	136-160	Argon	20	9.44
	Lap	1/8 in.	5/32 in.	160-180	Argon	20	
	Corner	1/8 in.	5/32 in.	136-160	Argon	20	
	Fillet	1/8 in.	5/32 in.	160-180	Argon	20	

Table 8 - Variables for Manually Welding Stainless Steel Using the Gas Tungsten ARC and DCEN or DCSP

Metal Thickness	Joint Type	Tungsten Electrode Diameter	Filler Rod Diameter (If required)	Amperage[1] with Backup	W/O Backup	Gas		
						Type	Flow CFH	L/Min
1/16 in. (1.59 mm)	All	1/16 in. (1.59 mm)	3/32 in. (2.38 mm)	60	35	Argon	13	6.14
3/32 in. (2.38 mm)	All	1/16 in. (1.59 mm)	1/8 in. (3.18 mm)	90	60	Argon	15	7.08
1/8 in. (3.18 mm)	All	1/16 in. (1.59 mm)	1/8 in. (3.18 mm)	115	85	Argon	20	9.44
3/16 in. (4.76 mm)	All	1/16 in. (1.59 mm)	5/32 in. (4.0 mm)	120	75	Argon	20	9.44
1/4 in. (6.35 mm)	All	3/32 in. (2.38 mm)	5/32 in. (4.0 mm)	130	85	Argon	20	9.44
3/8 in. (9.53 mm)	All	3/32 in. (2.38 mm)	3/16 in. (4.76 mm)	180	100	Argon	25	11.80
1/2 in. (12.7 mm)	All	5/32 in. (4.0 mm)	3/16 in. (4.76 mm)	-	250	Argon	25	11.80
3/4 in. (19.05 mm)	All	3/16 in. (4.76 mm)	1/4 in. (6.35 mm)	-	370	Argon	35	16.52

[1] Use alternating current with a constant high frequency (AC-HF)

Table 9 - Variables for Manually Welding Deoxidized Copper Using the Gas Tungsten ARC and DCEN or DCSP

Metal Thickness	Joint Type	Tungsten Electrode Diameter	Filler Rod Diameter (If required)	Amperage[1]	Gas		
					Type	Flow CFH	L/Min
1/16 in. (1.59 mm)	All	1/16 in. (1.59 mm)	3/32 in. (2.38 mm)	110 - 150	Argon	15	7.08
1/8 in. (3.18 mm)	All	3/32 in. (2.38 mm)	1/8 in. (3.18 mm)	175 - 250	Argon	15	7.08
3/16 in. (4.76 mm)	All	1/8 in. (3.18 mm)	1/8 in. (3.18 mm)	250 - 325	Argon	18	9.50
1/4 in. (6.35 mm)	All	1/8 in. (3.18 mm)	5/32 in. (4.0 mm)	300 - 375	Argon	22	10.38
3/8 in. (9.53 mm)	All	3/16 in. (4.76 mm)	5/32 in. (4.0 mm)	375 - 450	Argon	25	11.80
1/2 in. (12.7 mm)	All	3/16 in. (4.76 mm)	3/16 in. (4.76 mm)	525 - 700	Argon	30	14.16

[1] Use DCEN DCSP

10. METHODS OF STARTING THE ARC.

a. The gas tungsten arc may be started in one of three ways. These are by touch starting, by the application of a superimposed high frequency, and high voltage starting.

b. To start the arc, the remote finger or foot operated contactor switch must be depressed. This switch also causes the shielding gas and cooling water to flow prior to starting the arc.

c. When TOUCH STARTING is used, the electrode is touched to the base metal and withdrawn about 1/8 in. (about 3 mm). After a few seconds when the arc is stabilized (running smoothly), the electrode may be brought down to a short arc length of about 1/32 - 3/32 in. (.8 - 2.4 mm). Touching the tungsten electrode to the base metal again may contaminate the electrode.

d. To start the arc using the SUPERIMPOSED HIGH FREQUENCY, place the nozzle on the metal as shown in Figure 12. With the electrode and nozzle in this position, the contactor switch is turned on to start the high frequency current. The machine contactor switch may be operated by a pedal or manually operated remote switch. Another method of using high frequency start is to hold the electrode horizontally about 1 in. (about 25 mm) above the metal. The electrode is then rotated toward a vertical position. As the electrode comes near the base metal, the high frequency will jump the gap to start the arc. When using direct current, the high frequency will turn off automatically when the arc is stabilized. The high frequency should remain on constantly when using alternating current.

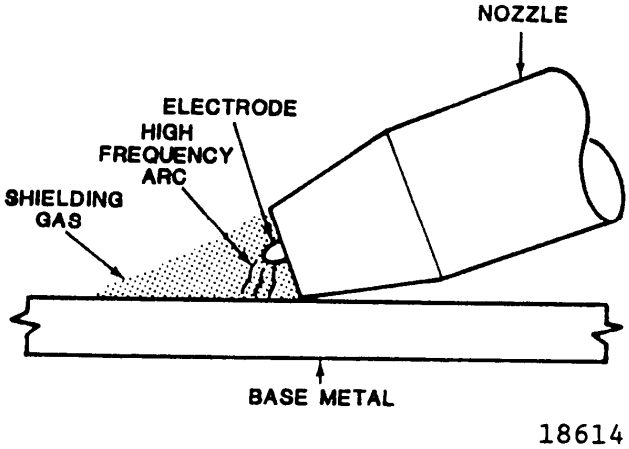

Figure 12. Position of Electrode and Nozzle for High Frequency Arc Starting

e. HIGH VOLTAGE STARTING is done with a high voltage surge. The electrode is brought close to the base metal as in high frequency starting. When the contactor switch is turned on, a high voltage surge causes the arc to jump and start the arc. After the arc is stabilized, the voltage surge stops automatically.

f. When welding with alternating current, the electrode forms a ball or spherical shape on the end. This ball can be formed before the actual weld begins. To form the ball on the electrode tip, strike the arc on a clean piece of copper. Copper will not melt easily and will not contaminate the electrode readily if a touch occurs. This piece of copper may be 2 in. x 2 in. (roughly 50 x 50 mm) and 1/16 in. (1.59 mm) thick. It should be kept by the welder as a part of the station equipment.

11. GAS TUNGSTEN ARC WELDING TECHNIQUES.

a. One advantage of GTAW is that a weld may be made with a small heat affected zone around the weld. Oxy fuel gas and SMAW heat a large area while the metal is raised to the melting temperature. This causes a large heat affected zone and a potentially weaker metal area around the weld.

b. Another advantage of GTAW is that there is no metal transfer through the arc. There is no spattering of metal globules from the arc or crater. The arc action is very quiet and the completed weld is of high quality.

c. GTAW should be done with the lowest current necessary to melt the metal. The highest welding speed possible, which will insure a sound weld, should be used.

d. Once the arc is struck, it is directed to the area to be melted. A puddle or molten pool is formed under the arc and the filler rod is added to fill the pool. The width of the pool, when making stringer beads, should be about 2 - 3 times the diameter of the electrode used. If the bead must be wider, a weaving bead is used. Several stringer beads may also be used to fill a wide groove joint. Sufficient shielding gas must flow to protect the molten metal in the weld area from becoming contaminated.

e. The filler rod must not be withdrawn from the area protected by the shielding gas. If the filler rod is withdrawn while it is molten, it will become contaminated. If it is then melted into the weld, the weld will be contaminated.

f. After the arc is struck, heat a spot until a molten pool forms. The electrode should be held at about a minimum of 60-75 degree angle from the work where an angle of 70-80 degrees may be preferred. Hold the filler rod at about a 16-20 degree angle to the work. See Figure13. When the molten pool reaches the desired size, add the filler rod to the pool. When the filler rod is to be added, the electrode should be moved to the back of the pool. The filler rod is than added to the forward part of the molten pool. Refer to Figure 14. This technique of adding the filler metal to the pool may be used for all weld joints in all positions.

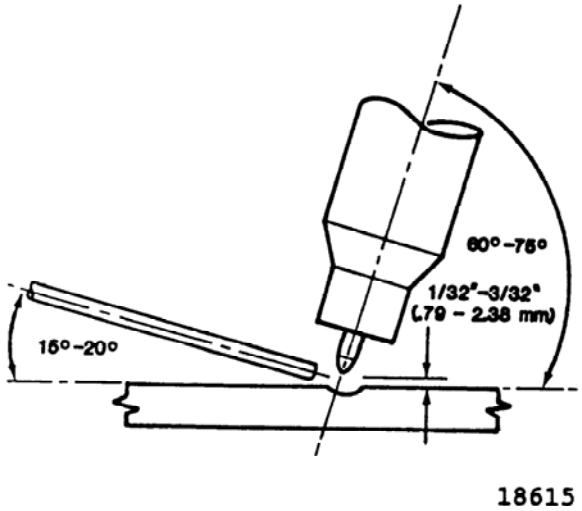

Figure 13. Relative Positions of Electrode and Filler Rod When GTAW

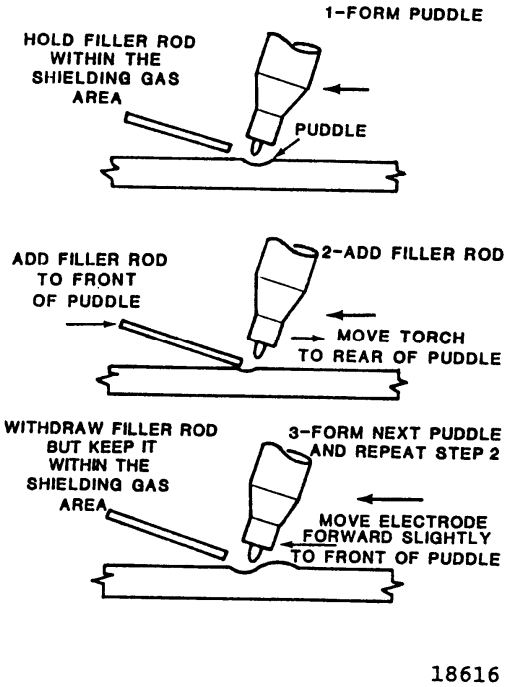

Figure 14 - Steps Required to Add Filler Metal During GTAW

12. <u>SHUTTING DOWN THE GTAW STATION.</u>

a. Each time the arc is broken, the shielding gas continues to flow for a few seconds. This protects the weld metal, electrode, and filler metal from becoming contaminated by the surrounding atmosphere. The gas also continues to flow after the torch or foot operated contactor (off-on) switch is turned off.

b. When welding is stopped for a short time, the GTAW torch is hung on an insulated hook. It may be hung on the hook of a gas economizer valve.

c. If welding is to be stopped for a long period of time, the station should be shut down. After the gas post-flow period, hang up the torch. Shut off the shielding gas cylinder. Turn on the torch or foot operated contactor switch to start the gas flow. Lift the torch from the economizer, if used, to drain the complete shielding gas system of gas. Hang the torch up again. Turn the regulating screw on the regulator counterclockwise to turn it off. Turn the screw in the flowmeter clockwise to shut it off. If the flowmeter is not turned off, the float ball will hit the top of the flowmeter very hard when the regulator is opened again. Turn off the arc welding machine power switch.

ORGANIZATIONAL, INTERMEDIATE AND DEPOT MAINTENANCE

SHIELDED METAL ARC WELDING AND EQUIPMENT

Reference Material

None

Alphabetical Index

Subject	Page No.
Shielded Metal Arc Welding (SMAW)	2
Characteristics	2
Welding Current, Voltage, and Adjustments	2
AC Welding	6
Breaking the ARC	5
Heat Effects in Electric Arc Welding	26
Flat Position Welding	11
Horizontal Position Welding	16
Improper ARC Control	6
Overhead Position Welding	24
Starting the ARC	4
Vertical Position Welding	20
Welding Beads	9

Record of Applicable Technical Directives

None

1. **SHIELDED METAL ARC WELDING (SMAW).**

a. Description. A manual arc welding process that uses a consumable electrode coated in flux to lay the weld. An electric current, in the form of either alternating current or direct current from a welding power supply, is used to form an electric arc between the electrode and the metals to be joined. As the weld is laid, the flux coating of the electrode disintegrates, giving off vapors that serve as a shielding gas and providing a layer of slag, both of which protect the weld area from atmospheric contamination.

2. **CHARACTERISTICS.**

a. WELD METAL DEPOSITION. In metal-arc welding a number of separate forces are responsible for the transfer of molten filler metal and molten slag to the base metal. Among these forces are those described in (1) through (6) below.

(1) Vaporization and condensation. A small part of the metal passing through the arc, especially the metal in the intense heat at the end of the electrode, is vaporized. Some of this vaporized metal escapes as spatter but most of it is condensed in the weld crater which is at a much lower temperature. This occurs with all types of electrodes and in all welding positions.

(2) Gravity. Gravity affects the transfer of metal in flat position welding. In other positions, smaller electrodes must be used to avoid excessive loss of weld metal, as the surface tension is too low to retain a large volume of molten metal in the weld crater.

(3) Pinch effect. The high current passing through the molten metal at the tip of the electrode sets up a radial compressive magnetic force that tends to pinch the molten globule and detach it from the electrode.

(4) Surface tension. This is the force that holds the filler metal and the slag globules in contact with the molten base or weld metal in the crater. It has little to do with the transfer of metal across the arc but is an important factor in retaining the molten weld metal in place and in the shaping of weld contours.

(5) Gas stream from electrode coatings. Gases are produced by the burning and volatilization of the electrode covering and are expanded by the heat of the boiling electrode tip. The velocity and movement of this gas stream tend to give the small particles in the arc a movement away from the electrode tip and into the molten crater on the work.

(6) Carbon monoxide evolution from electrode. According to this theory of metal movement in the welding arc, carbon monoxide is evolved within the molten metal at the electrode tip, causing miniature explosions which expel molten metal away from the electrode and toward the work. This theory is substantiated by the fact that bare wire electrodes made of high purity iron or ”killed steel” (i.e., steel that has been almost completely deoxidized in casting) cannot be used successfully in the overhead position. The metal transfer from electrode to the work, the spatter, and the crater formation are, in this theory, caused by the decarburizing action in molten steel.

b. Arc Craters are formed by the pressure of expanding gases from the electrode tip (arc blast), forcing the liquid metal toward the edges of the crater. Also, the higher temperature of the center, as compared with that of the sides of the crater, causes the edges to cool first. Metal is thus drawn from the center to the edges forming a low spot.

3. **WELDING CURRENT, VOLTAGE, AND ADJUSTMENTS.**

a. The selection of the proper welding currents and voltages depends on the electrode size, plate thickness, welding position, and welder’s skill.

b. Electrodes of the same size can withstand higher current and voltage values in flat position welding than in vertical or overhead welding. Since several factors affect the current and voltage requirements, data provided by welding equipment and electrode manufacturers should be used. For initial settings, see tables 1 and 2.

Table 1. E60XX Series Electrodes with Suggested Metal Thickness Applications and Amperage Ranges

Suggested Metal Thickness		Electrode Size		E6010 and E6011	E6012	E6013	E6020	E6022	E6027
in.	mm	in.	mm						
1/16 & less	1.16 & less	1/16	1.6		20-40	20-40			
1/16-5/64	1.6-2.0	5/64	2.0		25-60	25-60			
5/64-1/8	2.0-3.2	3/32	2.4	40-80	35-85	45-90			
1/8-1/4	3.2-6.4	1/8	3.2	75-125	80-140	80-130	100-150	110-160	125-185
1/4-3/8	6.4-9.5	5/32	4.0	110-170	110-190	105-180	130-190	140-190	169-240
3/8-1/2	9.5-12.7	3/16	4.8	140-215	140-240	150-230	175-250	170-400	210-300
1/2-3/4	12.7-19.1	7/32	5.6	170-250	200-320	210-300	225-310	370-520	250-350
3/4-1	19.1-25.4	1/4	6.4	210-320	250-400	250-350	275-375		300-420
1-up	25.4-up	5/16	8.0	275-425	300-500	320-430	340-450		375-475

Table 2. E70XX Series Electrodes with Suggested Metal Thickness Applications and Amperage Ranges

Suggested Metal Thickness		Electrode Size		E7014	E7015 and E7016	E7018	E7024 and E7028	E7027	E7048
in.	mm	in.	mm						
5/64-1/8	2.0-3.2	3/32*	2.4*	80-125	65-110	70-100	100-145		
1/8-1/4	3.2-6.4	1/8	3.2	110-160	100-150	115-165	140-190	125-185	80-140
1/4-3/8	6.4-9.5	5/32	4.0	150-210	140-200	150-220	180-250	160-240	150-220
3/8-1/2	9.5-12.7	3/16	4.8	200-275	180-255	200-275	230-305	210-300	210-270
1/2-3/4	12.7-19.1	7/32	5.6	260-340	240-320	260-340	275-365	250-350	
3/4-1	19.1-25.4	1/4	6.4	330-415	300-390	315-400	335-430	300-420	
1-up	25.4-up	5/16*	8.0*	390-500	375-475	375-470	400-525	375-475	

Note: When welding vertically up, currents near the lower limit of the range are generally used.
*: These diameters are not manufactured in the E7028 classification.

c. In preparation for welding, the machine must be adjusted to provide proper welding conditions for the size and type of electrode to be used. These adjustments include proper polarity, current, and voltage settings. Dual control machines make possible control of both voltage and current delivered to the arc. In single control units, current is controlled manually while the voltage is adjusted automatically.

d. Shown in Figure 1 are different arc transfer modes with maximum voltage and minimum current on the left through short circuiting of the arc on the right side of the figure. For more information about the problems from the different arc lengths refer to **IMPROPER ARC CONTROL**.

e. After the welding machine has been properly adjusted, the exposed end of the electrode should be gripped in the electrode holder so the entire fusible length can be deposited, if possible, without breaking the arc. In some cases, in welding with long electrodes, the electrode is bared and gripped in the center. Carbon and graphite electrodes should be gripped short of the full length to avoid overheating the entire electrode.

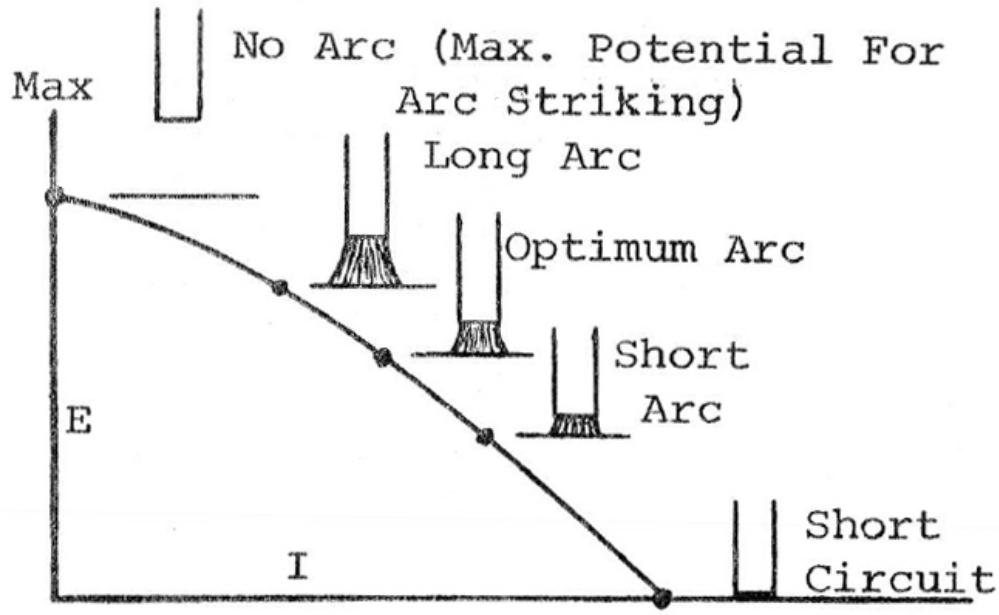

Figure 1. Arc Transfer Modes

4. **STARTING THE ARC.**

WARNING

If the electrode becomes frozen to the base metal during the process of starting the arc, all work to free the electrode when the current is on should be done with the welding shield covering the eyes.

a. Two methods are used for starting the arc, the striking or brushing method (figure 2) and the tapping method (figure 3). In both methods the arc is formed by short circuiting the welding current between the electrode and the work surface. When the arc is struck a surge of high current causes both the end of the electrode and a small spot of the base metal beneath the electrode to melt, instantly causing the two molten metals to puddle, completing the weld.

b. In the striking or brushing method the electrode is brought to the surface of the work in a lateral motion similar to striking a match. As soon as the electrode touches the surface, the electrode is raised to establish the arc (figure 2). The arc length or gap between the electrode and the work should be approximately equal to the diameter of the electrode. When the proper arc length is obtained a sharp crackling sound is heard.

c. In the tapping method the electrode is held in a vertical position to the work and tapped, or bounced, on the work surface (figure 3). Upon contact, the electrode is raised approximately the diameter of the electrode to establish the proper arc length.

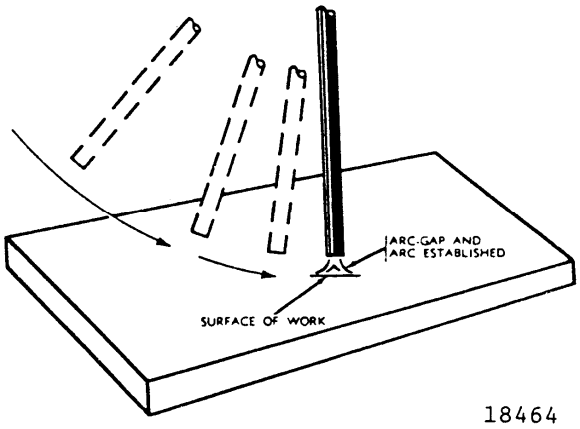

Figure 2. Striking or Brushing Method of Starting the Arc

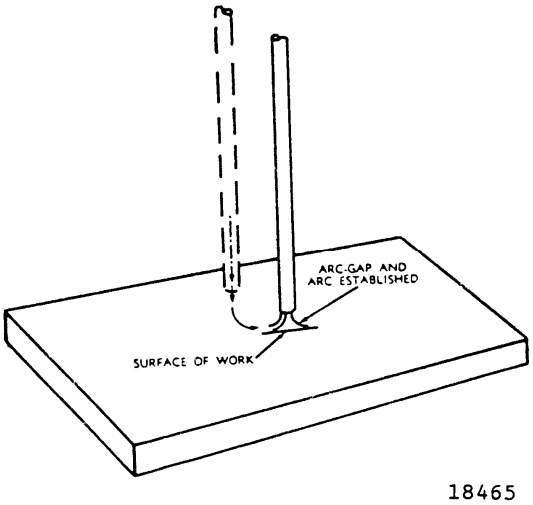

Figure 3. Tapping Method of Starting the Arc

d. If the electrode is raised too slowly with either of the above arc starting methods the electrode will freeze to the base metal. If this occurs, the electrode can usually be freed by a quick sideways twist to snap the end of the electrode from the base metal. If twisting does not dislodge the electrode, stop the welding machine, remove the holder from the electrode, and free the electrode with a light chisel blow.

e. With some electrodes, known as contact electrodes, the coating is an electrical conductor, and the arc is normally struck by holding the electrodes in contact with the work. The end of the electrode is held against the base metal and sufficient current passes through the coating to establish the arc. The arc length is held constant by maintaining this contact, which is possible because the coating has a melting point lower than the metal core of the electrode. The surface contact of this coated electrode, as it melts, forms a deep cut which prevents the electrode from freezing and also shields the arc.

5. **BREAKING THE ARC.**

a. Two procedures, as described below, are used to break the arc when changing electrodes or stopping the weld for any purpose.

(1) In manual welding, when changing electrodes, if the weld is to be continued from the crater the arc is shortened and the electrode moved quickly sideways to break the arc. When the weld is resumed, it is started at the forward, or cold end of the crater, moved backward over the crater, and then forward again to continue the weld.

(2) In manual semi-automatic welding, where filling or partial filling of the crater is required, the electrode is held stationary for a sufficient time to fill the crater and then withdrawn until the arc breaks.

6. **AC WELDING.**

a. In ac welding, the electrode does not have to touch the workpiece to start the arc. The superimposed high frequency current jumps the gap between the welding electrode and the work, thus establishing a path for the welding current to follow. The striking or brushing method is used to start the arc, with the difference that contact is not made during the swing.

b. The arc can be struck on the workpiece itself or on a heavy piece of copper or scrap steel and then carried to the starting point of the weld. Do not use a carbon block for starting the arc, as the electrode becomes contaminated, causing the arc to wander.

7. **IMPROPER ARC CONTROL.**

a. MALADJUSTMENTS. The effects of improper current and welding speed control and the effect on the welding bead are shown in figure 4 and table 3.

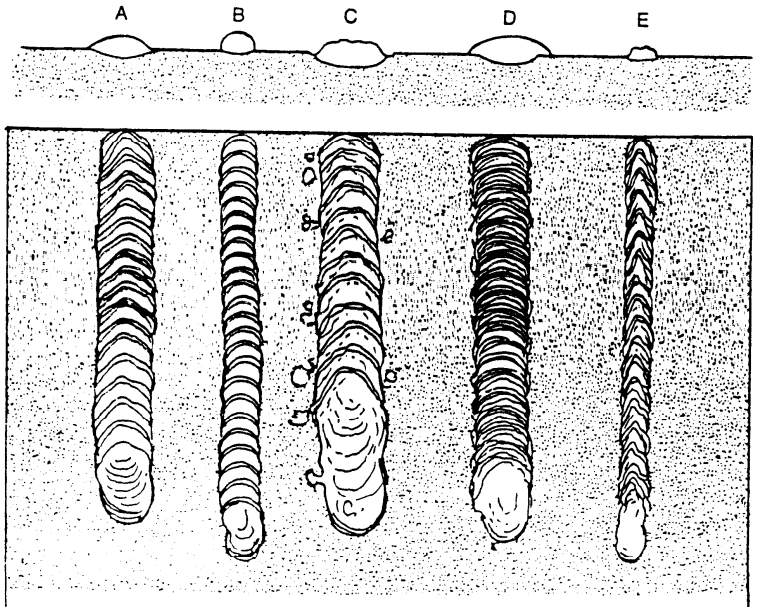

CHARACTERISTICS OF WELDS MADE UNDER VARIOUS CONDITIONS. THE CONDITIONS ARE ACCENTUATED TO ILLUSTRATE DIFFERENCES: A-CURRENT, VOLTAGE AND SPEED NORMAL; B-CURRENT TOO LOW; C-CURRENT TOO HIGH; D-SPEED TOO SLOW; E-SPEED TOO FAST.

18468

Figure 4 - Effects of Maladjustments and Weld Bead Characteristics of a Long Arc

Table 3. Effects of Maladjustment of Welding Current and Speed on the Bead Characteristics

OPERATING CONDITIONS	ARC SOUND	ELECTRODE MELTING RATE	CRATER APPEARANCE	BEAD APPEARANCE	DEPTH OF FUSION	SPATTER
High Current	Explosive sounds with pronounced cracking	Flux coating melts rapidly and irregularly	Deep, long, and irregular	Wide with low, flat crown, some under cutting	Deep and good	Very pronounced large drops
Low Current	Irregular crackling	Flux coating melts slowly	Shallow and small	Rounded high crown, some over lap	Slight and irregular	Slight
High welding speed	Sharp crackling sound	Balanced for good welding	Long and shallow	Narrow, irregular, some under cutting	Very slight and incom-plete	Slight
Low welding speed	Sharp crackling sound	Balanced for good welding	Long, wide, and shallow	Wide, high crown, excessive overlap	Good	Some due to over heating
Correct welding conditions	Sharp crackling sound	Balanced and uniform for good welding	Rather deep and uniform	Good fusion, no undercut, no overlap	Deep and good	Very slight

b. LONG ARC. When welding with a long arc the protecting arc flame, as well as the molten globule at the end of the electrode, will whirl and oscillate from side to side (figure 5). The fluctuating flame will permit the molten base metal to become oxidized or burned before the molten metal of the electrode reaches the base metal. The direction of the molten filler metal, as it passes through the arc, will be difficult to control and a considerable portion will be lost as spatter. The long arc melts the electrode quickly, but the metal is not always deposited at the desired point. The long arc causes poor penetration, excessive overlap, and burned or porous metal in the weld, as shown in figure 6.

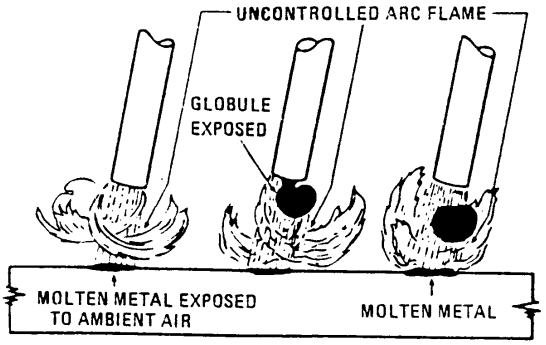

18479

Figure 5. Characteristics of a Long Arc

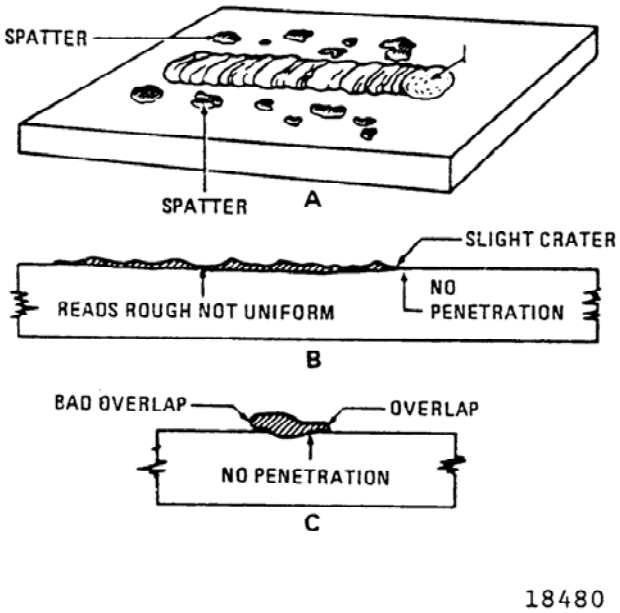

Figure 6. Defects in Weld Due to Long Arc

c. CORRECT ARC. In welding with the short arc, which is the desired procedure, the molten metal leaving the electrode passes through the arc under good protection from the atmosphere by the enveloping arc flame. With this arc better control of the filler metal is obtained and a better quality of weld metal results (figure 7). The short arc provides maximum penetration, better physical properties in the weld, and deposits the maximum amount of metal at the point of weld.

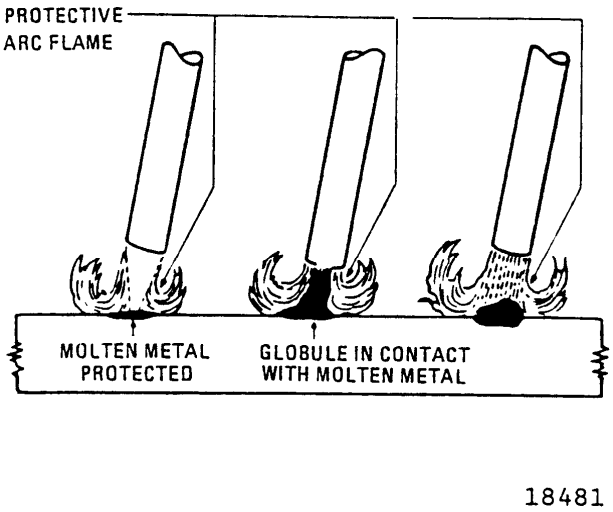

Figure 7. Characteristics of an Arc of Correct Length

d. VERY SHORT ARC. A very short arc is as undesirable as a long arc since it will produce much spatter, frequently freeze, and make continuous welding difficult. The results of welding with a very short arc are similar to those of the long arc (figure 5).

e. ARC BLOW.

(1) A characteristic of dc welding is arc blow, which is the occasional dancing of the arc forward and backward or side to side. This is caused by the magnetic field built up in the workpiece as a result of the flow of current. This magnetic field in the metal becomes crowded as the arc nears the end of the workpiece and this distortion of the field deflects the arc from its normal path and makes it difficult to control (figure 8).

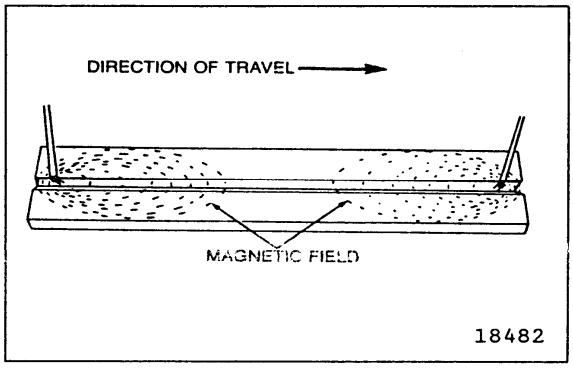

Figure 8. Arc Blow

(2) Arc blow may be reduced by carefully clamping the work to the table in several places. When welding large items it may be desirable to move the ground clamp or cable as the weld progresses.

(3) If the current flow changes direction rapidly, as in ac welding, the magnetic field will also change directions very rapidly, and this change will cancel the arc blow effect and stabilize the arc.

8. **WELDING BEADS.**

a. As the arc is struck, metal melts off the end of the electrode and is deposited in a molten puddle on the work and the electrode is shortened. This causes the arc to increase in length unless the electrode is fed downward as fast as it is melted off and deposited. Before moving forward, the arc should be held at the starting point for a short time to insure good fusion and to allow the bead to build up slightly. With the welding machine adjusted for proper current and polarity, good weld beads can be made by maintaining a short arc and welding in a straight line with constant speed.

b. For welding beads, the electrode in theory should be held at 90 degrees to the base metal (A, figure 9). However, in order to obtain a clearer view of the molten puddle, crater, and arc, the electrode should be tilted between 5 and 15 degrees toward the direction of travel (B, figure 9).

c. Proper arc length cannot be accurately judged by the eye but can be recognized by sound. The typical sharp crackling sound (Table 3) should be heard during the time the electrode is moved down to and along the surface of the work.

d. A properly made weld bead (figure 10) should leave little spatter on the surface of the work, and the arc crater or depression in the bead as the arc is broken should be approximately 1/16 inch deep (B, figure 10),

varying slightly with the size of electrode and plate thickness. The bead metal should be built up slightly but without weld metal overlap on the top surface, which would indicate poor fusion.

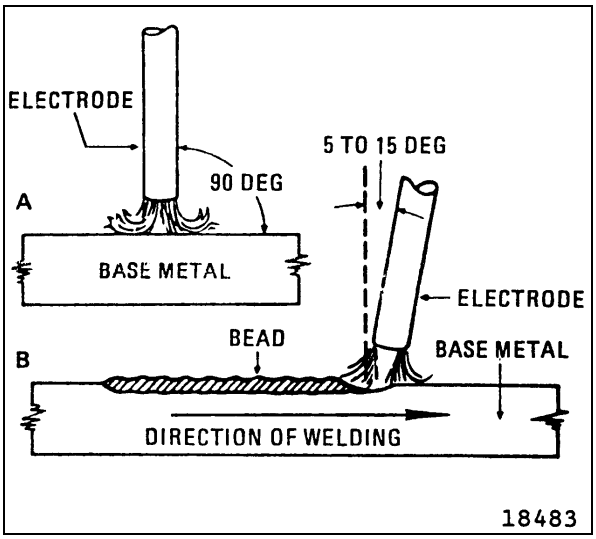

Figure 9. Position of Electrode in Making Bead

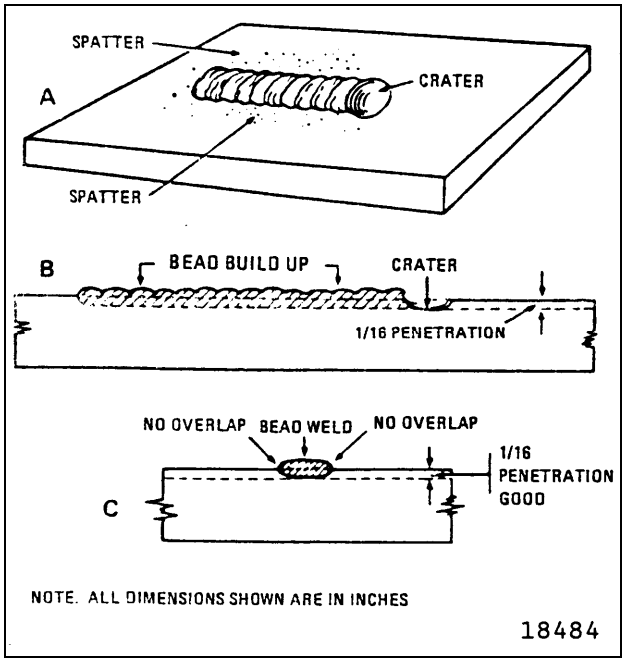

Figure 10. Properly Made Weld Beads

e. In some situations it is more economical to repair machined parts by building up worn surfaces with weld material, rather than replacing the parts. The built-up surface is then machined to the required size. This process

is called surface buildup or padding, and is done by depositing several layers of beads, usually at right angles to each other (figure 11), until the necessary thickness is attained. Surface buildup can be performed with either oxyacetylene (brass or steel), arc, or gas shielded arc welding processes. Each bead deposited must overlap each preceding bead by 1/4 of the bead width (figure 12).

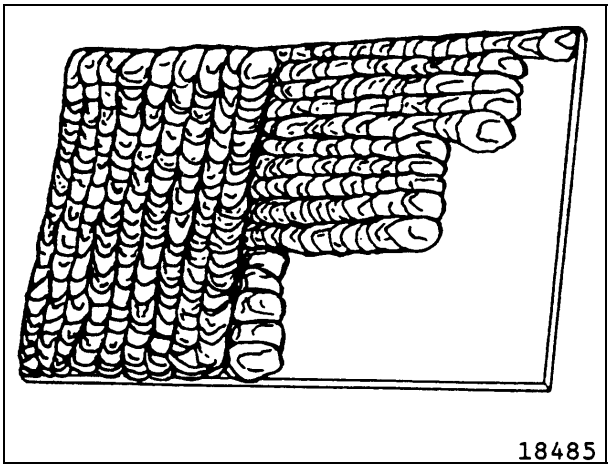

Figure 11. Padding Weld Beads

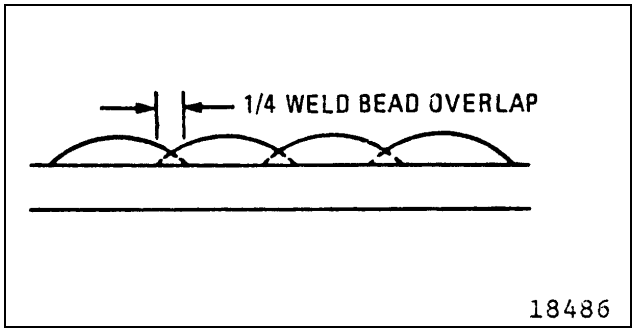

Figure 12. Weld Bead Overlap

9. **FLAT POSITION WELDING.**

a. Butt Joints in Flat Position.

(1) A butt joint is used to weld plates having surfaces in approximately the same plane. Several forms of joints are used to make butt welds in the flat position and most of these are shown in figure 13.

(2) Plates 1/8 inch thick or less can be welded in one pass; no special edge preparation is necessary. Plates 1/8 to 3/16 inch thick can be welded with no edge preparation by running a weld bead on both sides of the joint. Tack welds should be used to keep the plates aligned. The electrode motion is the same as that used in making a weld bead (**WELDING BEADS**).

(3) In welding 1/4 inch or heavier plates the edge of the plate should be prepared by beveling or by U or V grooving (figure 13), whichever is more applicable. Single or double bevels may be used depending on the

thickness of the plate being welded. The first bead should be deposited to seal the space between the two plates and weld the root of the joint. This layer must be thoroughly cleaned of slag before the second layer of metal is deposited. In making multipass welds (figure 14) the second, third, and fourth layers are deposited with a weaving motion of the electrode and each layer must be cleaned before the next layer is deposited. Any of the weaving motions illustrated in figure 15 may be used depending on the type and size of the electrode used.

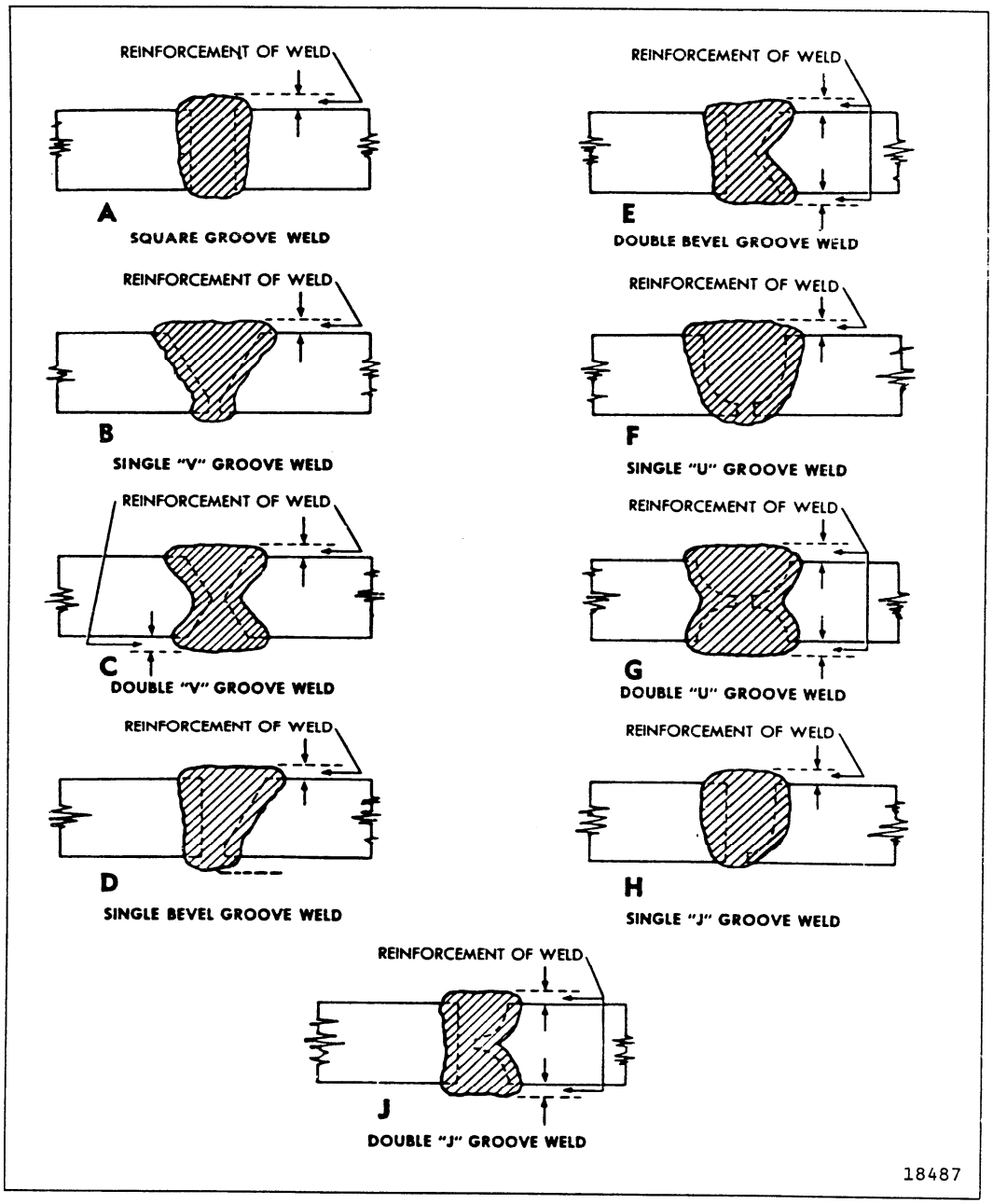

Figure 13. Butt Joints in Flat Position

(4) In the weaving motion, the electrode should be oscillated or moved uniformly from side to side, with a slight hesitation at the end of each oscillation and, as in welding beads, the electrode should be inclined 5 to 15

degrees in the direction of the welding. If the weaving motion is not properly performed, undercutting will occur as shown in figure 16. Excessive welding speed will also cause undercutting and poor fusion at the edges of the weave bead

b. Butt Joints in Flat Position With Backing Strips.

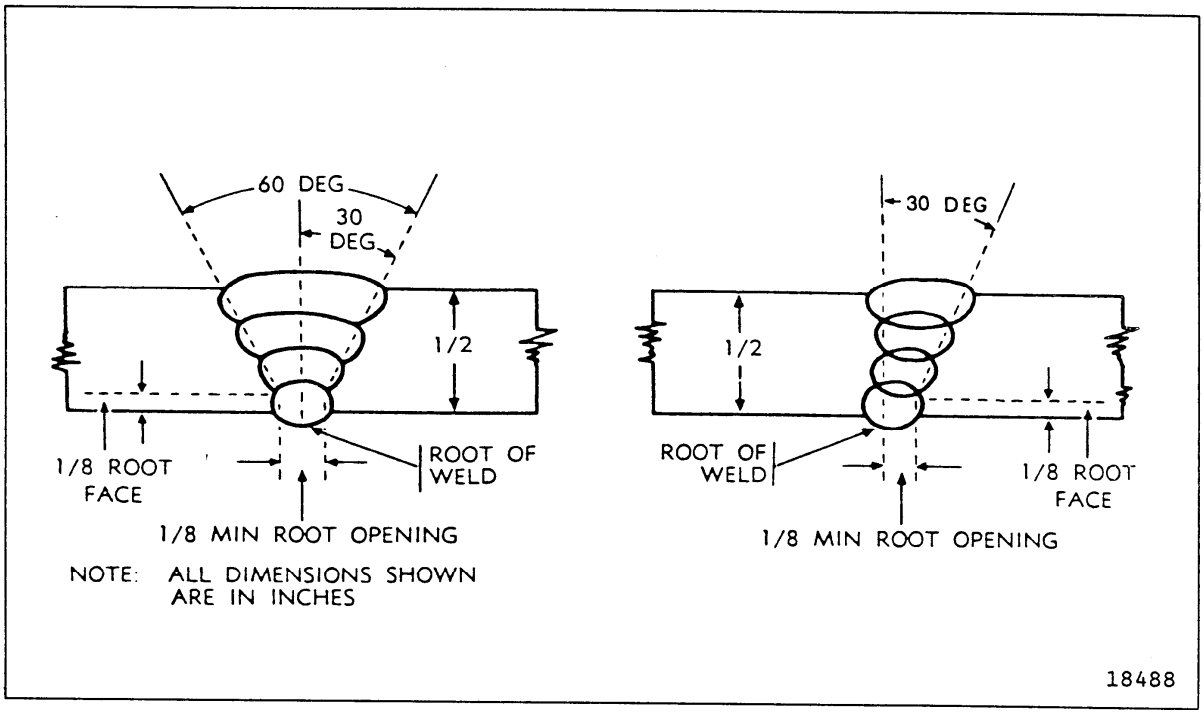

Figure 14. Butt Welds with Multipass Beads

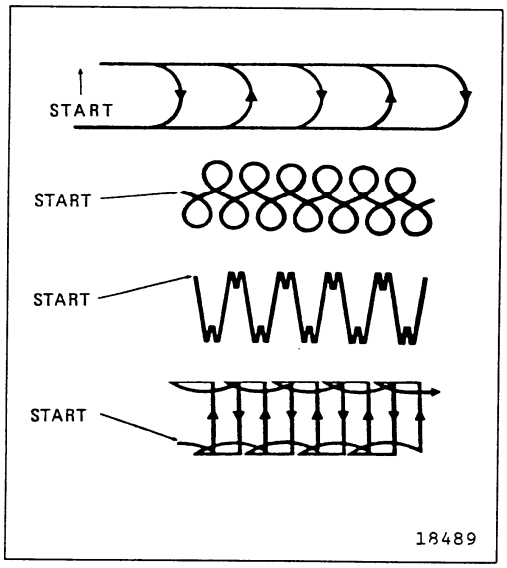

Figure 15. Weave Motion in Welding

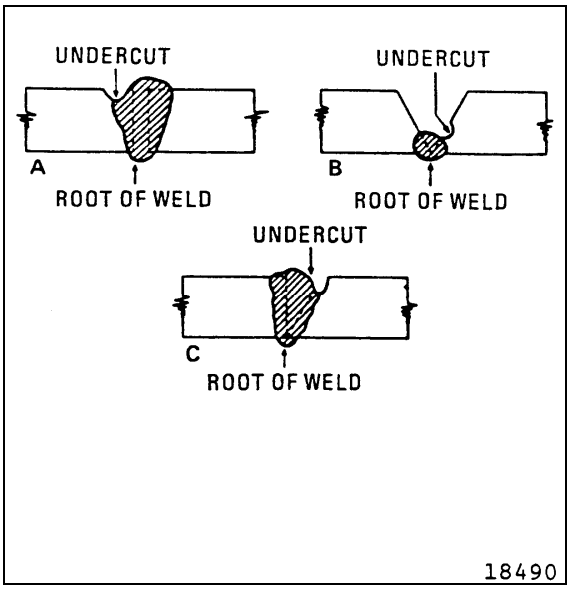

Figure 16. Undercutting in Butt Joint

(1) Backup, or backing strips, as they shall be referred to in this manual, are used when welding 3/16 inch or heavier plates to obtain complete fusion at the root of the weld, provide better control of the arc, and act as a cushion for the first bead or layer of weld metal. The edges of the plates to be welded are prepared in the same manner as required for welding without backing strips. Backing strips approximately 1 inch wide and 3/16 inch thick are used for plates up to 3/8 inch thick and backing strips 1-1/2 inches wide and 1/4 inch thick for plates over 3/8 inch thick. The backing strips are tack welded to the base of the joint as shown in figure 17.

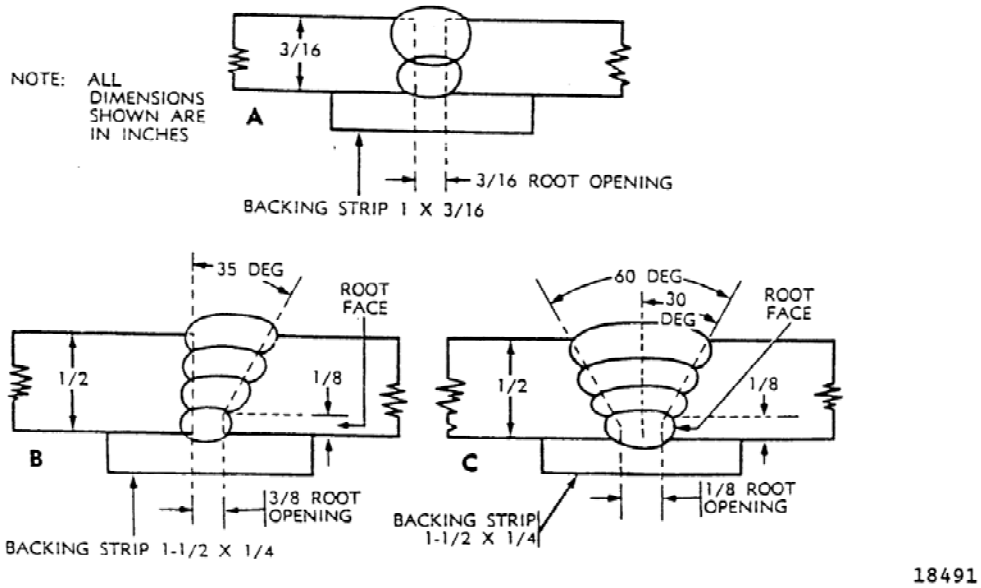

Figure 17. Welds Butt Welds with Backing Strips

(2) The joint should be completed by adding layers of metal.

(3) After the joint is completed, the backing strip can be ”washed away” with a cutting torch and a seal bead may be applied along the root of the weld, if necessary.

c. Plug and Slot Joints.

(1) Plug and slot welds are used to join two overlapping plates by depositing metal to fill a hole or slot which extends through the upper plate. Joints of this type are shown in figures 18 and 19.

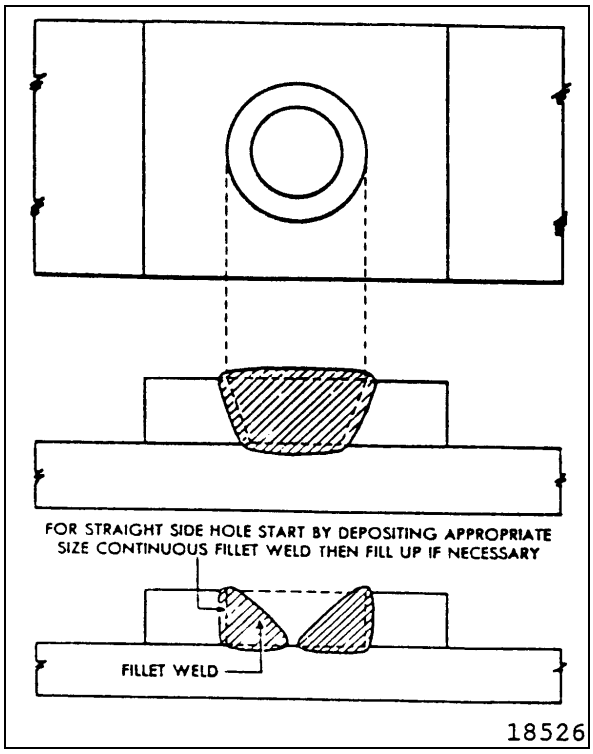

Figure 18. Plug Joint in Flat Position

(2) Slot welds are used in butt straps to join casehardened armor plate edges from the back or soft side. Plug welds are used to fill holes in plates and to join overlapping plates. Both of these welds are used to join plates where it is impossible to join them by other methods.

(3) A continuous fillet weld is made to obtain good fusion between the side walls of the hole or slot and the surface of the lower plate. The procedure for this fillet weld is the same as that required for lap welds and the hole or slot is then filled in to provide additional strength in the weld.

(4) The plug weld procedure may also be used to remove bolts or studs twisted off flush with the surface of the part. A nut somewhat smaller than the bolt or stud size is centered on the bolt or stud to be removed. A heavy coated electrode is then lowered into the nut and an arc struck on the exposed end of the broken bolt or stud. The nut is then welded to the bolt or stud and sufficient metal is added to fill the hole. The broken bolt or stud can then be removed with a wrench.

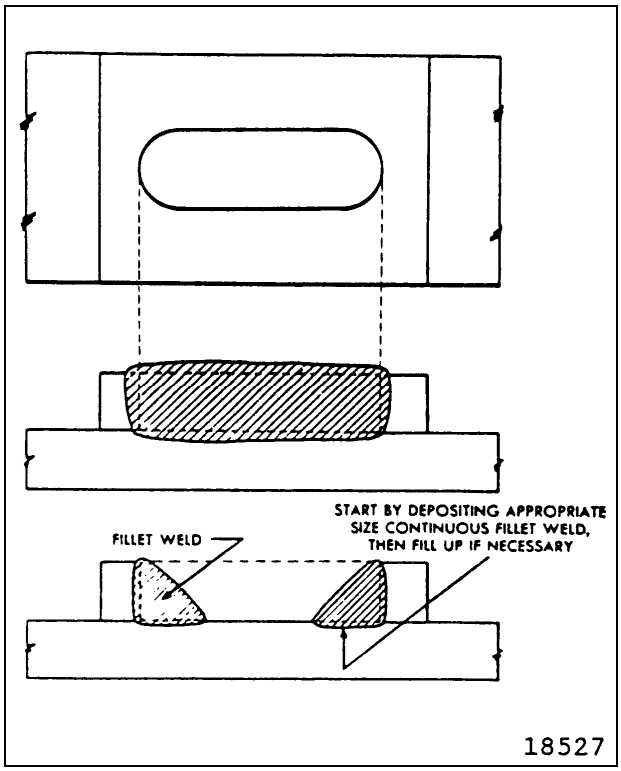

Figure 19. Slot Joint in Flat Position

10. **HORIZONTAL POSITION WELDING.**

a. Tee Joints.

(1) In making tee joints in the horizontal position, the two plates are located approximately at right angles to each other in the form of an inverted T. The ends of the vertical plate are tack welded to the surface of the horizontal plate as shown in figure 20.

(2) A fillet weld is used in making the tee joint and the correct arc (**IMPROPER ARC CONTROL**) is necessary to provide good fusion at the root and along the legs of the weld (A, figure 21). The electrode should be held at a 45 degree angle to the two plate surfaces and inclined approximately 15 degrees in the direction of welding (B, figure 21).

(3) Light plates can be secured with a fillet weld of one pass with little or no weaving of the electrode. Welding of heavier plates may require two or more passes, in which each successive pass is made in a semicircular weaving motion as illustrated in figure 22. There should be a slight pause at the end of each weave so as to obtain good fusion between the weld and base metals without undercutting.

(4) A fillet welded joint on a 1/2 inch plate or heavier can be made by depositing string beads in sequence, as shown in figure 23.

(5) Chain intermittent or staggered intermittent fillet welding (figure 24) is used for long tee joints. Fillet welds of this type are used where high weld strength is not required. In this type of weld the short welds are arranged so that the joint is equal in strength to a fillet weld along the entire length of a joint from one side only. Warpage and distortion are held to a minimum in chain intermittent type welds.

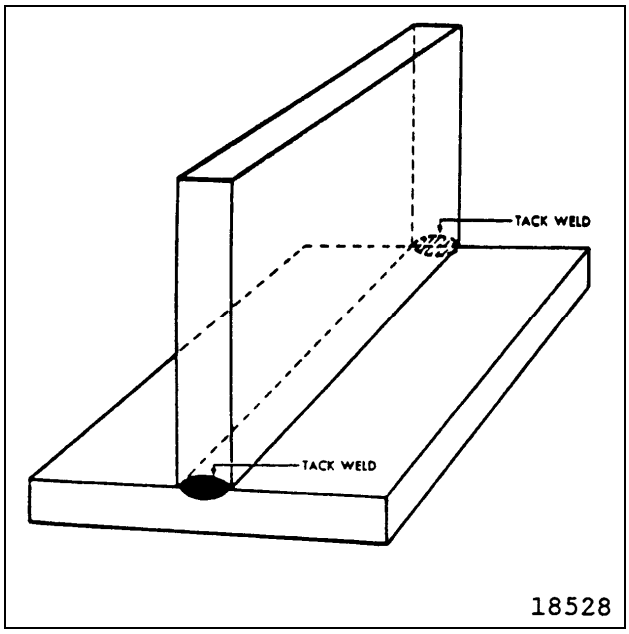

Figure 20. Tack Weld to Hold Tee Joint Elements in Place

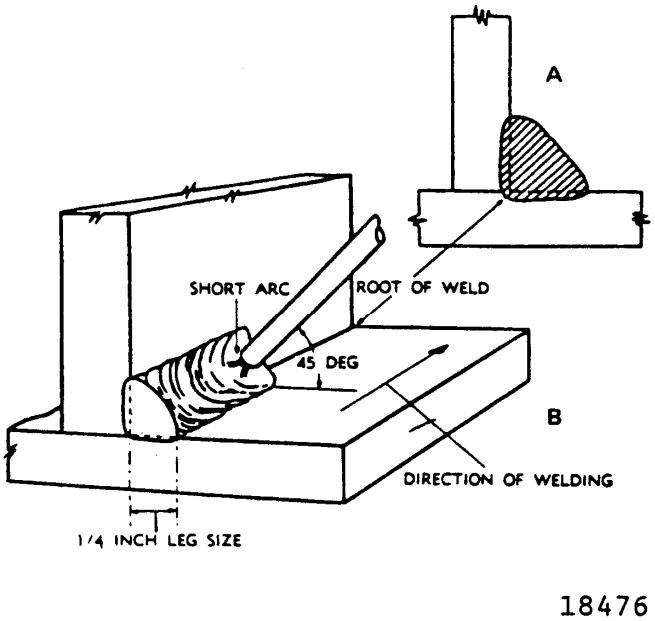

Figure 21. Position of Electrode and Fusion Area of Fillet Weld on the Joint

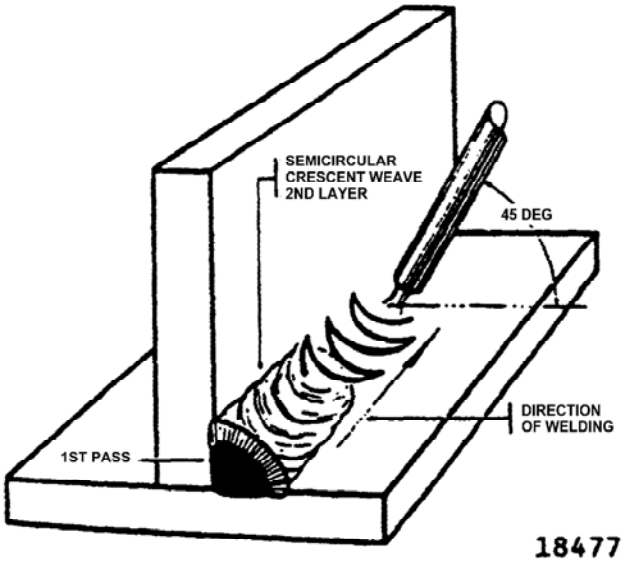

Figure 22. Weave Motion for Multipass Fillet Weld

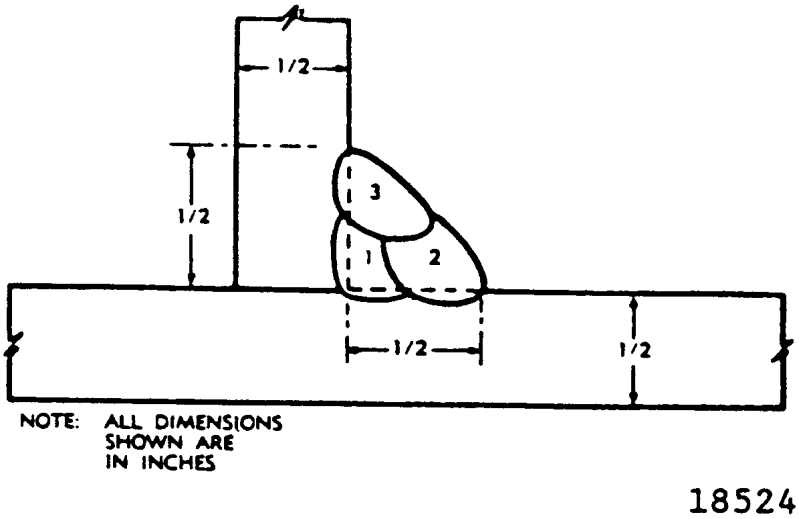

Figure 23. Fillet Welded Tee Joint on Heavy Plate

b. Lap Joints.

(1) In making lap joints, two overlapping plates are tack welded in place (figure 25) and then a fillet weld is deposited along the joint.

(2) The procedure for making this fillet weld is the same as that used in making fillet welds in tee joints except that the electrode should be held at an approximate 30 degree angle as shown in figure 26. The weaving motion is used and the pause at the edge of the top plate is sufficiently long to ensure good fusion and no undercut.

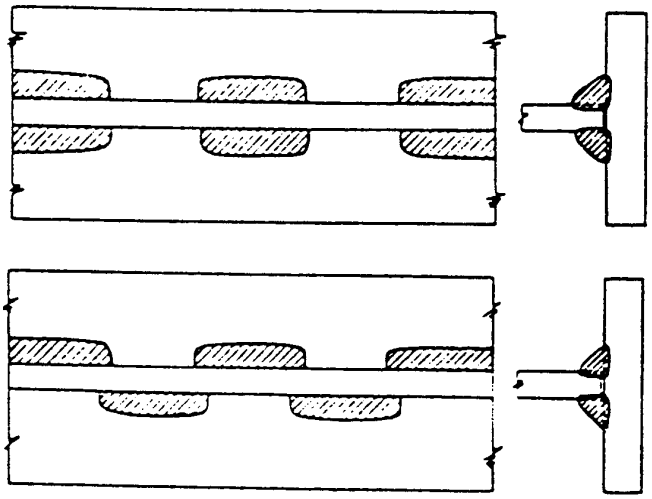

Figure 24. Intermittent Fillet Welds

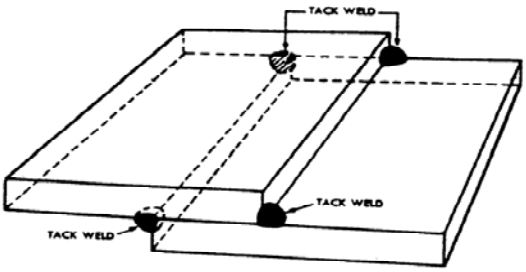

18474

Figure 25. Tack Welding a Lap Joint

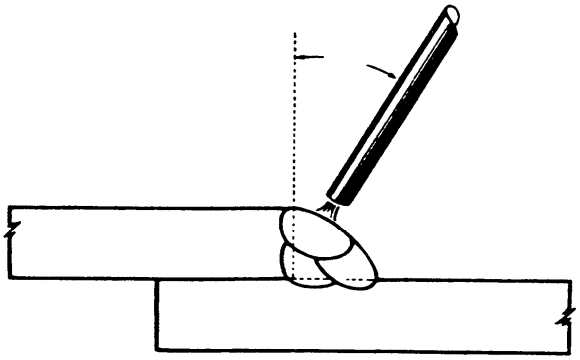

18475

Figure 26. Position of Electrode on Lap Joint

(3) In making lap joints on plates of different thicknesses the electrode is held so as to form an angle of 20 to 30 degrees from the vertical. Care must be taken not to overheat or undercut the edge of the thinner plate and the arc must be controlled to ”wash-up” the molten metal to the edge of this plate.

11. **VERTICAL POSITION WELDING.**

a. VERTICAL WELDING. Welding on a vertical surface is more difficult than welding in a flat position since, due to the force of gravity, the molten metal tends to flow downward.

b. WELD BEADS.

(1) In welding in a vertical position, current settings should be less than those used in the flat position. Currents used for welding in an upward direction on a vertical plane are slightly lower than those used when welding downward.

(2) The proper angle between the electrode and the base metal is important to the deposit of a good bead in vertical welding. The welding electrode should be held at 90 degrees to the vertical, as shown at A, figure 27. When welding upward and weaving is necessary, the electrode should be oscillated, as shown at B, figure 27. When welding downward, the electrode should be inclined downward about 15 degrees from the horizontal with the arc pointing upward, as shown at C, figure 27. When welding downward, and a weave is required, the electrode should be oscillated as shown at D, figure 27.

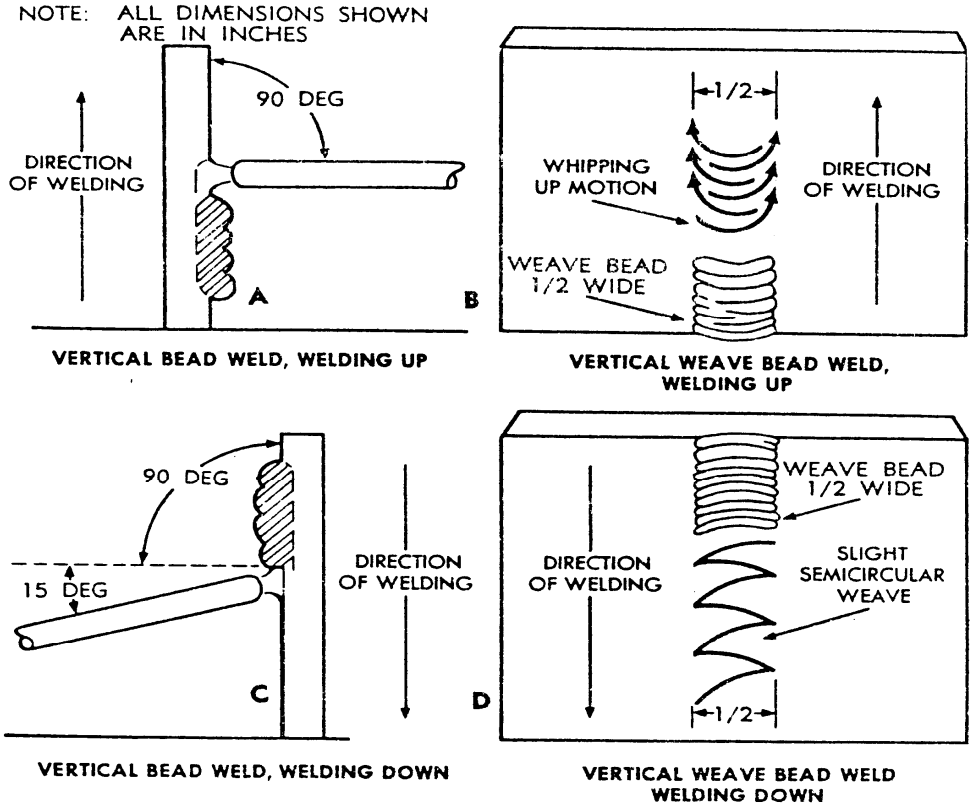

Figure 27. Bead Welding in a Vertical Position

(3) When depositing a weld bead in a horizontal direction on a vertical plate, the electrode should be held at right angles to the vertical plate and tilted about 15 degrees toward the direction of the welding, as shown in figure 28.

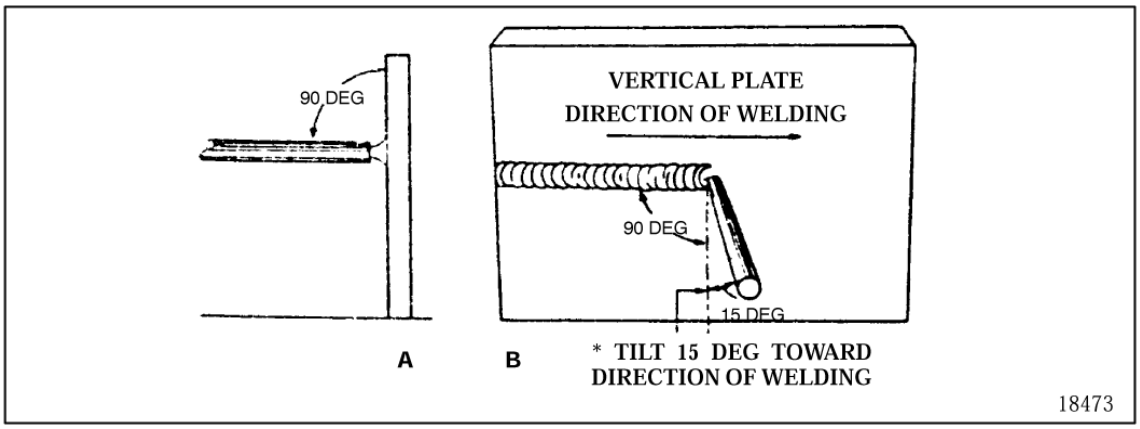

Figure 28. Vertical Position Welding with Bead in Horizontal Position

c. Butt Joints.

(1) Butt joints on plates in a vertical position are prepared for welding in the same way as those required for butt joints in flat positions, and backing strips may be used in as illustrated in figure 17, (**FLAT POSITION WELDING**).

(2) Butt joints on beveled plates 1/4 inch in thickness can be made by using a triangular weave motion, as shown in figure 29.

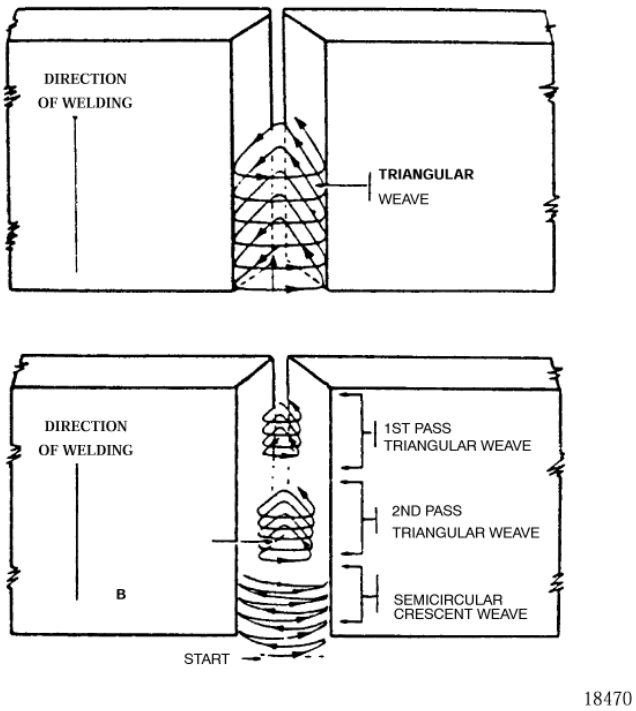

Figure 29. Welding Butt Joint in Vertical Position

(3) Welds on 1/2 inch thick plates, or heavier, should be made in several passes, as shown in figure 30. The first pass, or root weld, should be made with the electrode at 90 degrees to the vertical plate (A, figure 30) and subsequent passes made at 30 degrees to vertical plate (B and C, figure 30). All passes in the weld should be made with a semicircular weave or triangular motion.

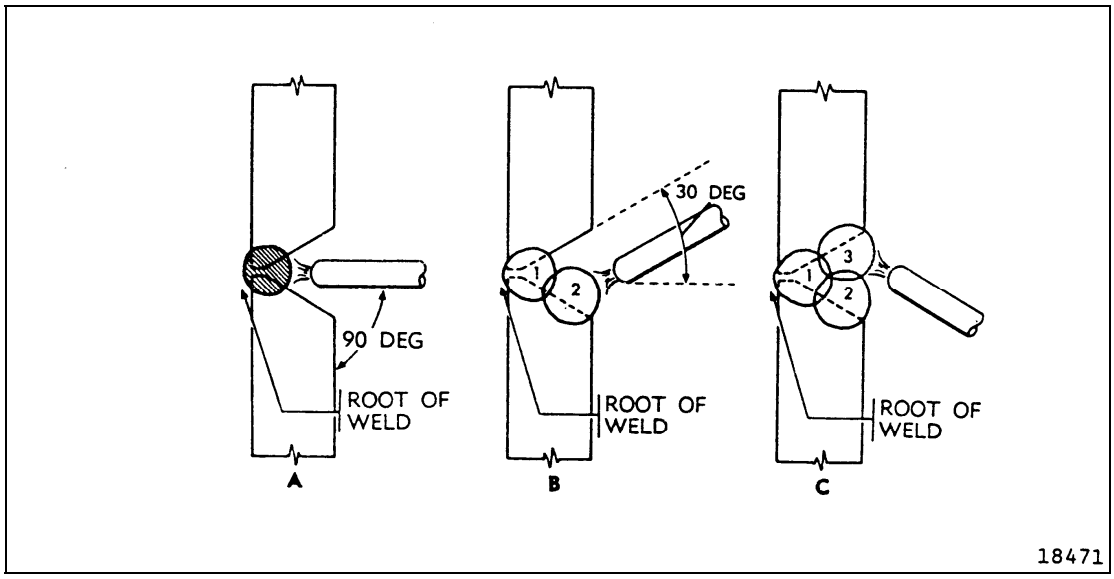

Figure 30.Welding Butt Joint on Vertical Plates

(4) When welding butt joints in the horizontal direction on vertical plates, the metal is deposited in multi-pass beads, as shown in figure 30. The first pass is made at an angle of 90 degrees to the vertical plate and subsequent passes are made with the electrode held parallel to the beveled edge opposite the edge on which the bead is being deposited. The weaving motion should have a short pause at the edge of the weld.

d. Fillet Welds.

(1) In making fillet welds in lap joints the electrode should be held at 90 degrees to the plates or not more than 15 degrees above the horizontal for proper molten metal control (F, figure 31).

(2) In welding fillets in tee joints the electrode should be held at 90 degrees to the vertical position of the plate (A, figure 31) and approximately 1/2 of the distance, or 45 degrees, from each plate of the tee. In making the weaving motion care must be taken not to pass the electrode too close to either side of the tee so as not to strike an arc from the side of the electrode.

(3) In welding tee joints in the vertical position the weld should be started at the bottom and progress upward in a triangular weaving motion, as shown at A, figure 31. A slight pause in the weave at the points indicated will improve side wall penetration.

(a) If the weld metal should overheat and start to run, the electrode should be shifted away quickly from the crater, without breaking the arc (B, figure 31). This will permit the molten metal to solidify. The electrode should be returned immediately to the crater after the metal has ceased to run, in order to maintain the desired size of the weld.

(b) When more than one pass is necessary to make a fillet weld on a tee joint, either of two weaving motions (C or D, figure 31) may be used to lay succeeding beads on top of the root pass.

(4) To make fillet welds on lap joints in a vertical position, the electrode should be held in a 90 degree angle from the vertical position and at a 45 degree angle to the vertical plate (E, figure 31). The triangular weaving motion should be used and the pause at the end of the weave on plate G should be slightly longer than that at the edge of plate H. Care should be taken not to undercut either plate or to allow the molten metal to overlap at the edges of the weave.

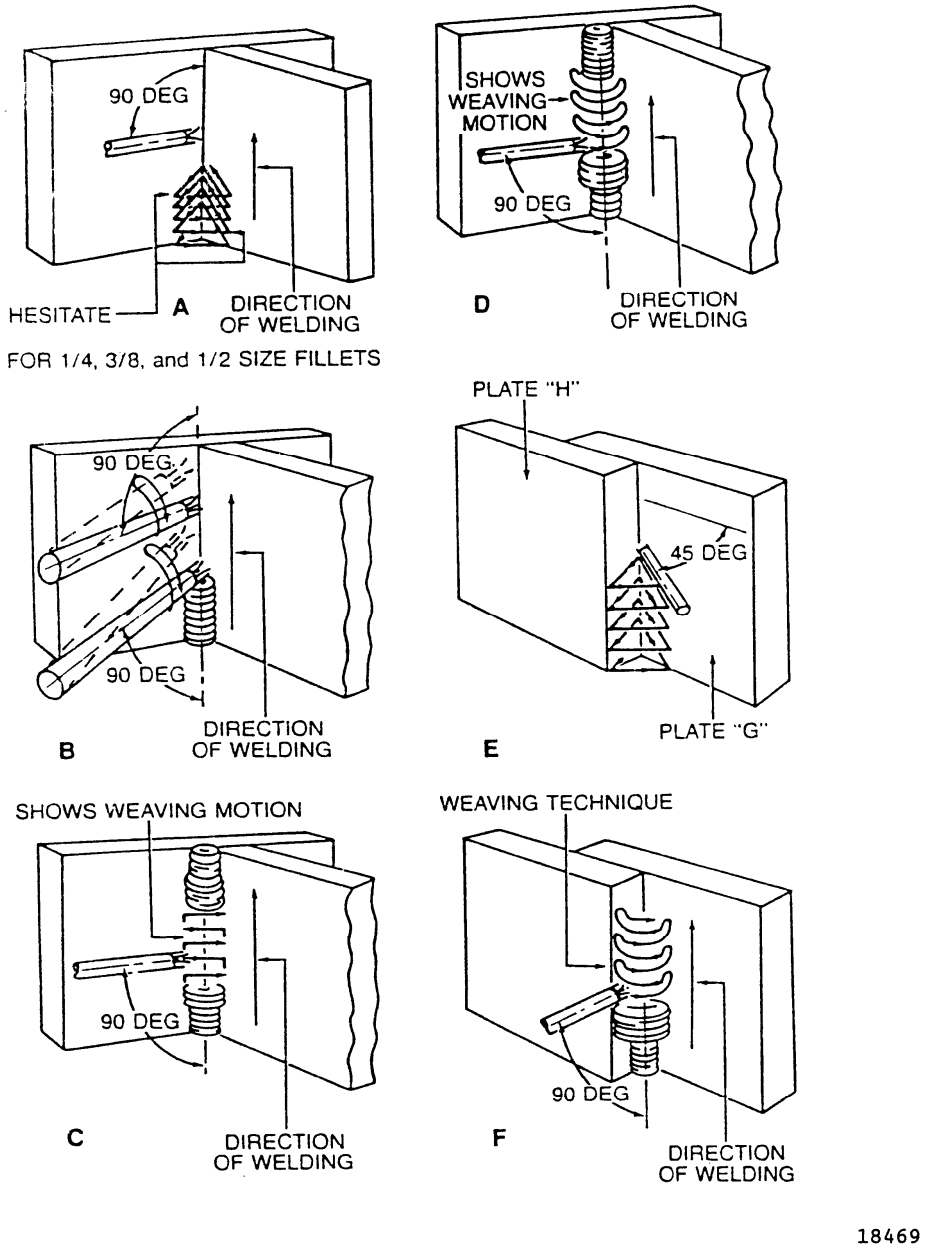

Figure 31. Vertical Welds in Vertical Position

12. **OVERHEAD POSITION WELDING.**

a. Overhead Welding. The overhead position is the most difficult in welding and a well maintained arc is necessary in order to retain complete control of the molten metal. As in vertical welding, the force of gravity tends to cause the metal to sag on the plate or drop away from the joint. If the arc is too long the difficulty of transferring the metal from the electrode to the metal is increased and large globules of metal will drop from the electrode. If the arc is too short the electrode will periodically freeze to the plate (**STARTING THE ARC**). This action can be prevented by intermittently shortening and lengthening the arc slightly during the welding procedure. Care should be taken never to carry too large a pool of molten metal in the weld.

b. Weld Beads.

(1) For welding beads in the overhead position, the electrode should be held at 90 degrees to the base metal (A, figure 32) or tilted approximately 15 degrees in the direction of the weld, as shown in B, figure 32, if it will provide a better view of the arc and crater.

(2) Weave beads can be accomplished by using the motion illustrated at C, figure 32. A rather rapid motion at the end of each semicircular weave is necessary in order to control the molten metal deposit. Excessive weaving will cause overheating and formation of large molten metal pools, which will be hard to control.

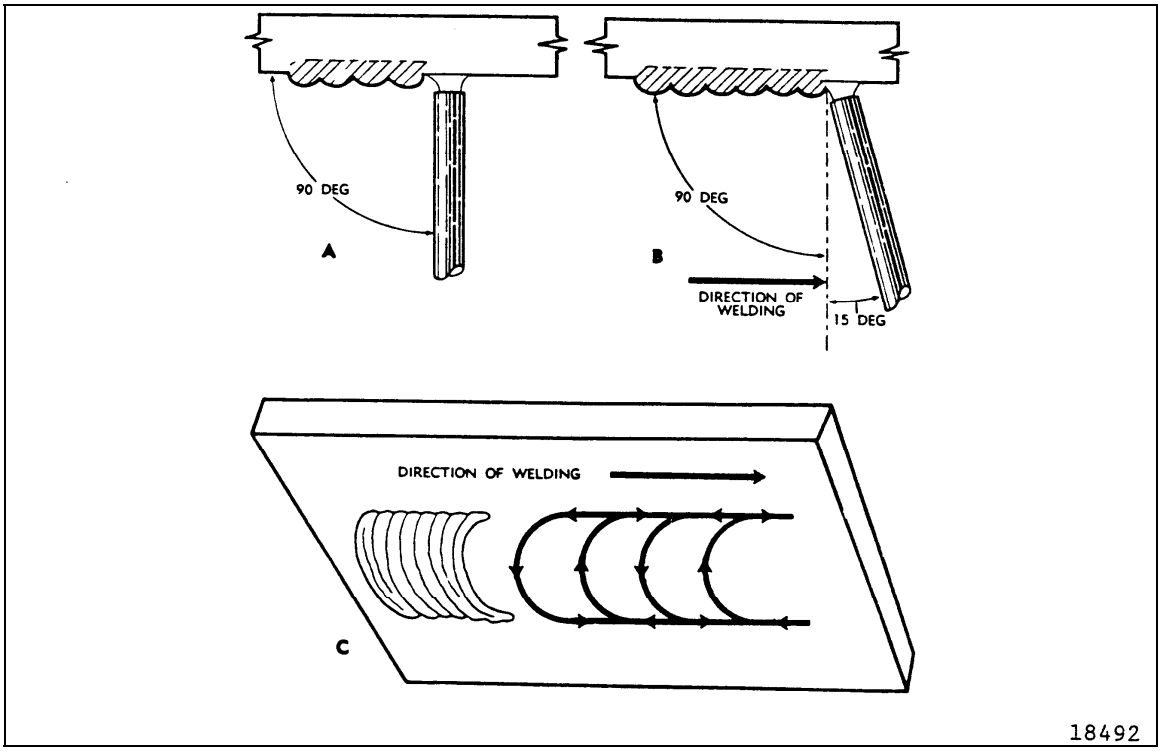

Figure 32. Position of Electrode and Weave Motion in Overhead Position

c. Butt Joints.

(1) Plates for overhead position welding should be prepared the same as those required for flat positioning and the weld is most satisfactory if backing strips are used (**FLAT POSITION WELDING)**. If the plates are beveled with a feather edge and no backing strip is used, the weld will tend to burn through unless extreme care is taken by the operator.

(2) For overhead butt welding, bead rather than weaving welds are preferred. Each bead should be cleaned and rough areas of the weld chipped before subsequent passes are made.

(3) The positions of the electrode in relation to the plates are shown in figure 33 for depositing weld beads on 1/4 to 1/2 inch material. The first pass is deposited as illustrated in A, figure 33 and subsequent passes are shown in B and C, figure 33.

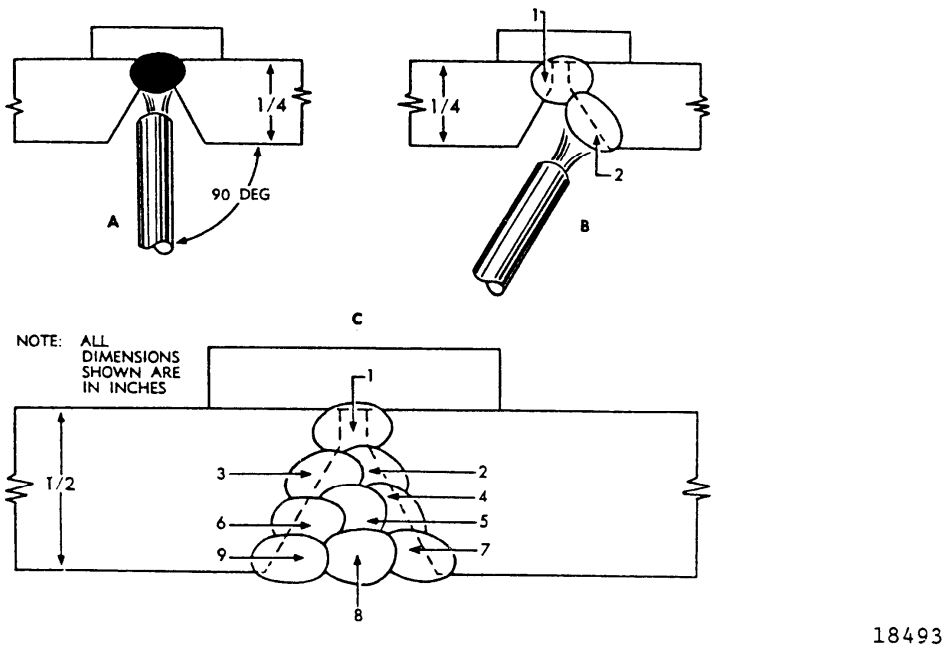

Figure 33. Multipass Butt Joint in Overhead Position

(4) The electrodes should not be too large in diameter as this will prevent holding the correct arc to insure good penetration at the root of the joint. Avoid excessive current. This would create a very fluid puddle which is difficult to control.

d. Fillet Welds.

(1) In making fillet welds in either tee or lap joints in the overhead position, weaving of the electrode is not recommended. The electrode should be held at approximately 30 degrees to the vertical plate and moved uniformly in the direction of the welding with a 15 degree tilt so the operator can observe the condition of the molten metal as it is deposited (B, and C, figure 34). The arc motion should be controlled to secure good penetration to the root of the weld and good fusion with the side walls of the plates. If the molten metal becomes too fluid and tends to sag, the electrode should be quickly whipped away from the crater and ahead of the weld to lengthen the arc and allow the metal to solidify. The electrode should then be returned to the crater and welding continued.

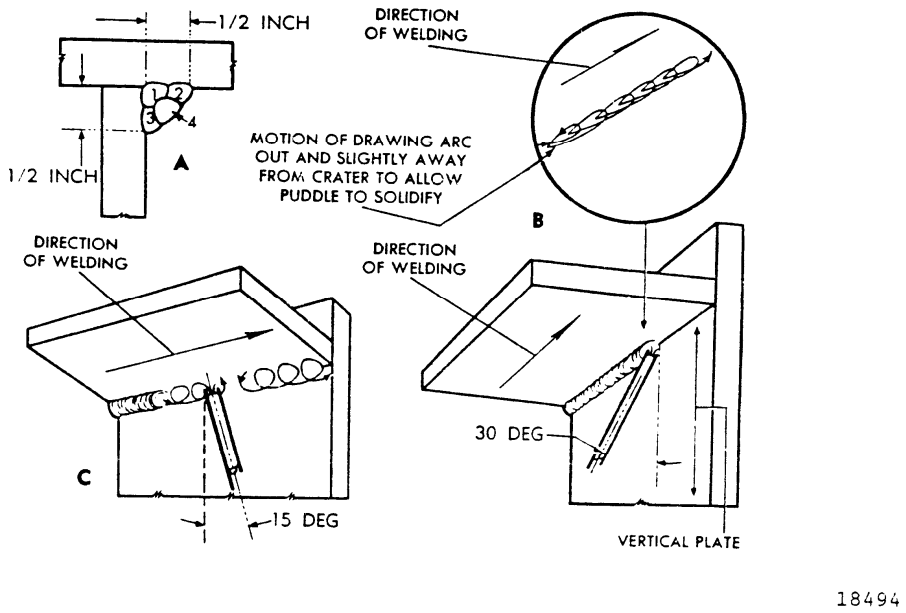

Figure 34. Fillet Welding in Overhead Position

(2) Fillet welds for either tee or lap joints on heavy plate in overhead positions may require several passes to make a secure joint. The order in which these beads are deposited is shown in A, figure 34. The first, or root pass is a string bead with good penetration and fusion to the root and side walls of the plates. Second, third, and fourth passes are then applied and although a weaving motion is not used to apply these beads the electrode is moved in a slight circular motion, as shown in C, figure 34. This motion of the electrode permits greater control and better distribution of the metal being deposited. All slag and oxides must be removed from the surface of the weld between each successive pass.

13. **HEAT EFFECTS IN ELECTRIC ARC WELDING.**

a. General.

(1) The heat affected zone in welding operations is that portion of the base metal which is changed metallurgically by the welding heat. This heat affected zone consists of three sections: the very hot section next to the molten filler metal, the annealed section next to the over-heated base metal and the section adjacent to the cold base metal.

(2) The rate at which heat is applied to the plates is greater in arc welding than in oxyacetylene welding; this causes a higher concentration of heat at a particular point, and therefore, steeper heat climb at that particular point but less metal affected by the heat. In bare metal arc welding, the heat affected zone is narrowest; it increases with heavy coated electrodes. Stainless steel electrodes produce a smaller heat affected zone than the heavy coated electrodes.

b. Factors Affecting the Heat Affected Zone.

(1) In general, the extent of the heat affected zone will increase with the amount of welding energy used in arc welding. This energy is a function of the voltage and amperage settings.

(2) Greater penetration for arc welds is not necessarily obtained with an increase in the heat affected zone because this increase is in width rather than in depth. With the exception of cored and stainless steel arc welds, the smaller the heat affected zone, the more rapid is the removal of heat from this area by the surrounding parent metal.

c. In arc welding, the extent of the heat affected zone is increased under the conditions listed below:

(1) When, with a constant current, the welding speed is slowed.

(2) When, with a constant welding speed, the current is increased.

(3) When lighter sections of plate are welded.

(4) When preheating is necessary.

ORGANIZATIONAL, INTERMEDIATE AND DEPOT MAINTENANCE

GAS METAL ARC WELDING AND EQUIPMENT

Reference Material

None

Alphabetical Index

Subject	Page No.
Gas Metal-ARC Welding (GMAW) Equipment	2
Commencing to Weld	8
Generator Polarity	8
Installing the Wire Electrode in Feed Type Machine	7
Installing the Wire Electrode in Spool Gun	5
Preventive Maintenance	9
Reclaiming Burned-Back Contact Tubes	8
Setting Machine	5
Setting the Shielding Gas Pressure	7

Record of Applicable Technical Directives

None

1. **GAS METAL-ARC WELDING (GMAW) EQUIPMENT.**

a. Gas metal-arc welding is a process in which a consumable, bare wire electrode is fed into a weld at a controlled rate of speed, while a blanket of inert shielding gas shields the weld zone from atmospheric contamination.

NOTE

Different types of GMAW welding equipment are available through normal supply channels. Manuals for each type must be consulted prior to welding operations.

NOTE

If for any reason the wire electrode stops feeding, a burn-back will result. With the trigger depressed, the welding contactor is closed, allowing the welding current to flow through the contact tube. As long as the wire electrode advances through the tube, an arc will be drawn at the end of the wire electrode. Should the wire electrode stop feeding while the trigger is still depressed, the arc will then form at the end of the contact tube, causing it to melt-off. This is called burn-back.

(1) Three basic sizes of wire electrode may be used: 3/64 inch, 1/16 inch, and 3/32 inch.

(2) Any type of metal may be welded provided the welding wire electrode is of the same composition as the base metal.

b. A Spool Gun Type GMAW contains a motor and gear reduction unit which feeds the wire electrode from a 4 inch diameter spool holding one pound (1 lb.) of electrode wire. The spool is mounted behind the trigger assembly as shown in Figure 1.

NOTE

The contact tube transfers power from the electrode cable to the welding wire electrode. An insulated lock screw is provided which secures the contact tube in the torch.

(1) Contact tube. This tube, made of copper, has a hole in the center that is from 0.01 to 0.02-inch larger than the wire electrode being used. The contact tube and the inlet and outlet guide bushings must be changed when the size of the wire electrode is changed.

(2) Nozzle and holder. The nozzle is made of copper to dissipate heat and chrome-plated to reflect the heat. The holder is made of stainless steel and is connected to an insulating material which prevents an arc from being drawn between the nozzle and ground in case the gun comes in contact with the work.

(3) Inlet and outlet guide bushings. The bushings are made of nylon for long wear. They must be changed to suit wire electrode size when the electrode wire is changed.

(4) Pressure roll assembly. This is a smooth roller under spring tension, which pushes the wire electrode against the feed and allows the wire to be pulled from the spool. A thumbscrew applies the tension as required.

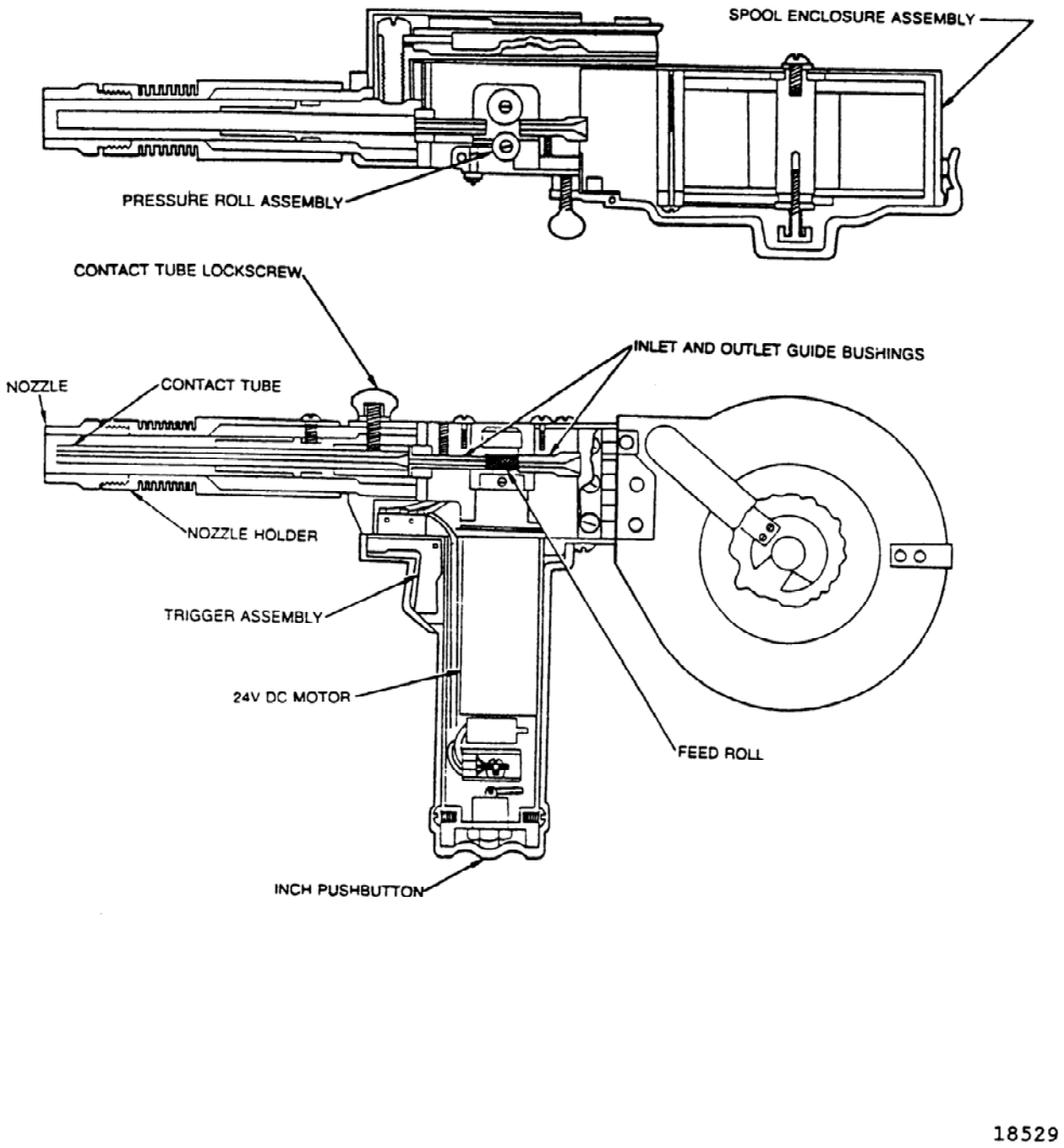

Figure 1. Spool Gun Type (GMAW)

(5) Motor. When the inch button is depressed, the current for the motor is supplied by a 110-volt ac-dc source, and the motor pulls the wire electrode from the spool before starting the welding operation. When the trigger is depressed, the actual welding operation starts and the motor pulls the electrode from the spool at the required rate of feed. The current for this motor is supplied by the welding generator.

(6) Spool enclosure assembly (spool gun). This assembly is made of plastic which prevents arc spatter from jamming the wire electrode on the spool. A small window allows a visual check on the amount of wire electrode remaining on the spool.

b. The Wire Feed Type GMAW uses a wire spool mounted behind the Wire Drive Wheels on the DC Welding Machine Power Unit. An adjustable, constant speed motor actuates the Wire Drive Wheels (Figure 2).

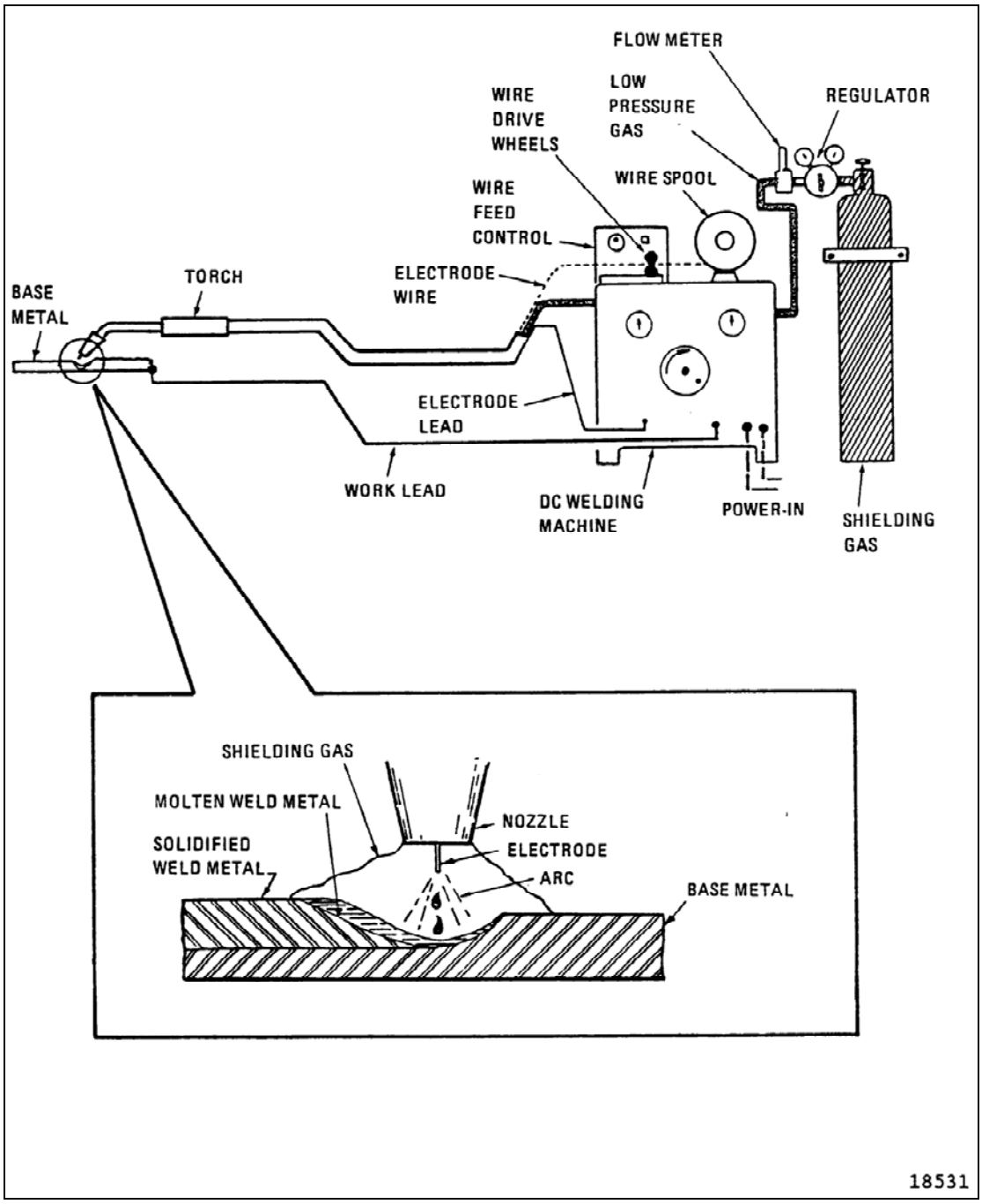

Figure 2. Wire Feed Type (GMAW)

(1) Welding contactor. The positive cable from the dc welding generator is connected to a cable coming out of the welding contactor and the ground cable is connected to the workpiece. The electrode cable and the welding contactor cable are connected between the welding contactor and voltage control box as shown.

(2) Shielding gas hose. This hose is connected from the voltage control box to the shielding gas regulator on the shielding gas cylinder(s).

(3) Electrode cable. The electrode cable enters through the welding current relay and connects into the shielding gas supply line. Both then go out of the voltage control box and into the torch in one line.

(4) Voltage pickup cable. This cable must be attached to the ground cable at the work. This supplies current to the motor during welding when trigger is depressed.

(5) Torch switch and grounding cables. The torch switch cable is connected into the voltage control box, and the torch grounding cable is connected to the case of the voltage control box.

c. Figure 3 displays the connecting diagram explained below for the Gas Metal Arc Welding Station used with either the Spool Gun Type or the Wire Feed Type GMAW.

2. **SETTING MACHINE.**

a. A dial on the front of the voltage control box, labeled **WELDING CONTRO**L regulates the speed of the wire electrode feed.

b. drive roll adjustment - The most common mistake made during setup is over-tightening the drive rolls. Tighten drive rolls just enough (and no more) so that no slippage occurs when wire is pulled through rolls.

c. Turning the dial counterclockwise increases the speed of the wire electrode being fed from the spool. This decreases the amount of resistance across the arc and allows the motor to turn faster. Turning the dial clockwise will increase the amount of resistance, thereby decreasing the speed of the wire electrode being fed from the spool.

d. Setting wire feed rate automatically draws the required amperage. As amperage increases the transfer modes changes from shorting to globular to spray to buried. The current/wire feed setting at which these transitions take place depends on the wire diameter and shielding gas composition. Some examples of the transfer modes are depicted in Figure 4.

e. The instant the wire electrode touches the work, between 50 to 100 volts dc is generated. This voltage is picked up by the voltage pickup cable and shunted back through the voltage control box into a resistor. There it is reduced to the correct voltage (24v dc) and sent to the torch motor.

f. Voltage setting - Volts setting will set the arc length. Set voltage at 24-26 volts.

3. **INSTALLING THE WIRE ELECTRODE IN SPOOL GUN.**

a. Open the spool enclosure cover assembly, brake, and pressure roll assembly (Figure 2).

NOTE

Spooled wire has a tendency to unravel when loosened from the spool. Maintain a firm grip on the wire during the threading operation.

b. Unroll and straighten 6 inches of wire electrode from the top of the spool.

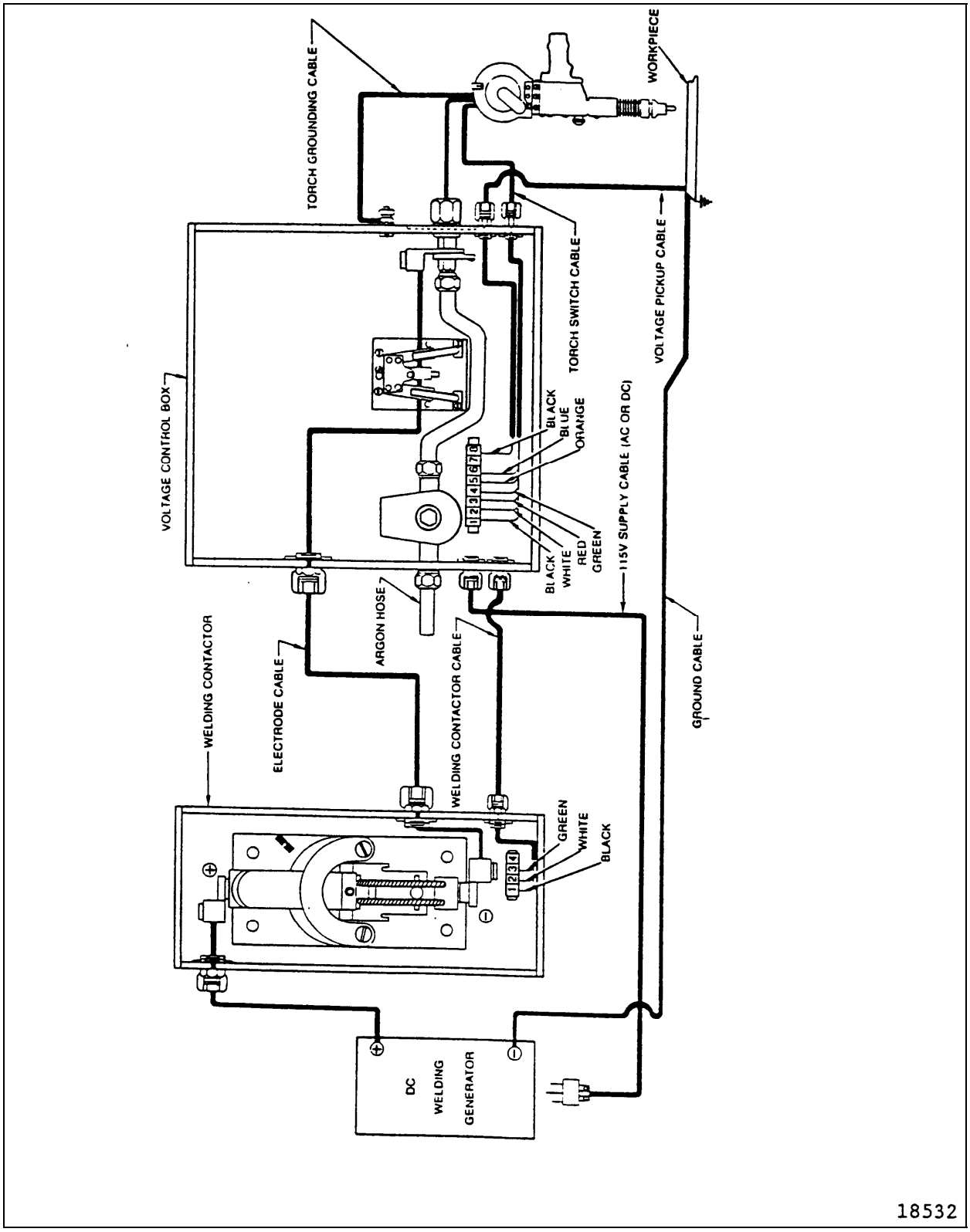

Figure 3. Connection Diagram for GMAW

Spray Transfer	Pulse Spray Transfer	Globular Transfer

Figure 4. Various Spray Methods

c. Feed this straightened end of the wire electrode into the inlet and outlet bushings; then place the spool onto the mounting shaft.

d. Close the pressure roller, and secure it in place. Press the inch button, feeding the wire electrode until there is one-half inch protruding beyond the end of the nozzle.

4. **INSTALLING WIRE ELECTRODE IN FEED TYPE MACHINE (Figure 3).**

a. Cut off any portion of the free end of the wire which is not straight. Ensure that the cut end is free from rough surfaces to permit proper feeding.

b. Loosen the knob on the drive roll pressure adjustment, pivot the pressure adjustment free of the cover, and pivot the pressure gear assembly away until it is in an open position.

c. Feed the wire through the inlet wire guide, past drive rolls, and on into the outlet wire guide. Feed approximately 4 in. (102 mm) of wire into outlet wire guide.

d. Close the gear cover making sure the teeth on the pressure gear mesh with teeth on the drive gear. The welding wire must also be in the grooves of the drive rolls.

e. Pivot the pressure adjustment knob until washer on the pressure adjustment is seated on top of the gear cover.

f. Turn the pressure adjustment knob in a clockwise direction until the drive rolls are tight against the welding wire. Do not overtighten. Further adjustment to attain desired clamping pressure can be made after the welding power source and wire feeder are put into operation.

g. Draw the gun cable out straight.

h. Turn the Line Disconnect Switch and the welding power source **POWER** switch to the **ON** position. If the welding power source has spot welding capabilities, place the Selector switch located on the welding power source front panel, in the **CONTINUOUS** position.

i. Press and hold the gun trigger until the wire extends about 1/4 in. (6 mm) out of the contact tube.

j. Cut off excess wire to 1/4 in. (6 mm) length with side cutters.

5. **SETTING THE SHIELDING GAS PRESSURE.**

a. Flip the shielding switch on the front of the voltage control panel to the **MANUAL** position.

b. Turn on the shielding gas cylinder valve, and set the appropriate pressure on the regulator.

c. When the proper pressure is set on the regulator, flip the shielding switch to the **AUTOMATIC POSITION**.

d. With the shielding switch in the **MANUAL** position, the shielding gas continues to flow. With the shielding switch in the **AUTOMATIC** position, the shielding gas flows only when the torch trigger is depressed and stops flowing when the torch trigger is released.

6. **GENERATOR POLARITY.**

a. The generator is set on reverse polarity. When set on straight polarity, the torch motor will run in reverse, withdrawing the wire electrode and causing a very severe burn-back.

7. **RECLAIMING BURNED-BACK CONTACT TUBES.**

a. When burn-backs occur, a maximum of 3/8 inch may be filed off. File a flat spot on top of the guide tube, place a drill pilot on the contact tube, and then drill out the contact tube. For a 3/64 inch contact tube, use a No. 46 or 47 drill bit.

8. **COMMENCING TO WELD.**

a. Press the inch button and allow enough wire electrode to emerge from the nozzle until one-half inch protrudes beyond the end of the nozzle. With the main light switch **ON** and the shielding gas and power sources adjusted properly, the operator may commence to weld.

b. If welding in the open air, a protective shield must be installed to prevent the shielding gas from being blown away from the weld zone.

c. Pressing the torch trigger sends current down the torch switch cable and through the contactor cable, closing the contactor.

d. When the contactor closes, the welding circuit from the generator to the welding torch is completed.

e. As the contactor closes, the shielding gas solenoid valve opens, allowing a flow of shielding gas to pass out of the nozzle to shield the weld zone.

f. As the contactor closes, the shielding gas solenoid valve opens, allowing a flow of shielding gas to pass out of the nozzle to shield the weld zone.

CAUTION

To prevent overloading the torch motor when stopping the arc, release the trigger; never snap the arc out by raising the torch without first releasing the trigger.

g. Welding will continue as long as the arc is maintained and the trigger is depressed.

9. **PREVENTIVE MAINTENANCE.**

a. Keep all weld spatter cleaned out of the inside of the torch. Welding in the vertical or overhead positions will cause spatter to fall down inside the torch nozzle holder and restrict the passage of the shielding gas. Keep all hose connections tight.

b. To replace the feed roll, remove the name plate on top of the torch, the flathead screw and retainer from the feed roll mounting shaft, and the contact ring and feed roll. Place new feed roll on the feed roll mounting shaft, making certain that the pins protruding from the shaft engage the slots in the feed roll. Reassemble the contact ring and nameplate.

THIS PAGE INTENTIONALLY LEFT BLANK

ORGANIZATIONAL, INTERMEDIATE AND DEPOT MAINTENANCE

OXY-ACETYLENE WELDING, CUTTING AND BRAZING EQUIPMENT

Reference Material

None

Alphabetical Index

Subject	Page No.
Braze Weld Techniques	25
Backhand Welding	26
Fillet Welding	27
Forehand Welding	25
Multilayer Welding	27
Brazing and Cutting Metals	34
Cutting Steel and Cast Iron	36
Cutting with Oxyacetylene Flame	35
General	34
Scarfing, Gouging and Hogging	36
Silver Brazing	34
Flame Adjustment and Flame Types	21
Lighting the Torch	21
Flat Position Welding	28
Butt Welds	29
Horizontal Position Welding	31
Overhead Position Welding	33
Oxyacetylene Cutting Equipment	18
Operation of Cutting Equipment	18
Oxyacetylene Cutting Torch and Other Equipment	18
Oxyacetylene Welding, Cutting, and Brazing Process and Techniques	21
General Welding Procedure	21
Working Pressure for Welding Operations	21
Oxyacetylene Welding Fluxes	25
Oxyacetylene Welding Rods	24
Oxyacetylene Welding Torch	10
Hose	11
Types of Torches	10
Welding Tips and Mixers	11
Portable Welding Equipment	5
Acetylene Cylinders	5
Oxygen and Acetylene Regulators	8
Oxygen and its Production	7
Setting up the Welding Equipment	13
Adjustment of Working Pressure	15
Clogged Tubes and Tips	17
Cylinders	13

Alphabetical Index (Cont)

Subject	Page No.
Damaged Inlet Connection Threads	17
Leaking Valves	17
Leaks in the Mixing Heads	17
Pressure Regulators	14
Regulator Malfunctions and Corrections	16
Scored or Out-of-Round Tip Orifices	17
Shutting Down Welding Equipment	15
Torch	14
Torch Malfunctions and Corrections	16
Stationary Welding Equipment	3
Types of Flames	22
Neutral Flame	23
Oxidizing Flame	24
Reducing or Carburizing Flame	24
Vertical Position Welding	32
Welding and Cutting Equipment	3
Oxyacetylene Welding Equipment	3

Record of Applicable Technical Directives

None

1. **WELDING AND CUTTING EQUIPMENT.**

2. **OXYACETYLENE WELDING EQUIPMENT.**

a. The equipment used for oxyacetylene welding consists of a source of oxygen and a source of acetylene from a portable or stationary outfit, two regulators, two lengths of hose with fittings, a welding torch with a cutting attachment or a separate cutting torch.

b. Suitable goggles for eye protection, gloves to protect the hands, a method to light the torch, and wrenches for the various connections on the cylinders, regulators, and torches are required.

3. **STATIONARY WELDING EQUIPMENT.**

a. **GENERAL.** This equipment is installed where welding operations are conducted in a fixed location.

b. **OXYGEN**. The oxygen is obtained from a number of cylinders arranged in a manifold configuration and equipped with a master regulator to control the pressure and the gas flow (Figure 1). The oxygen is supplied to the welding stations through a pipe line equipped with station outlets (Figure 2).

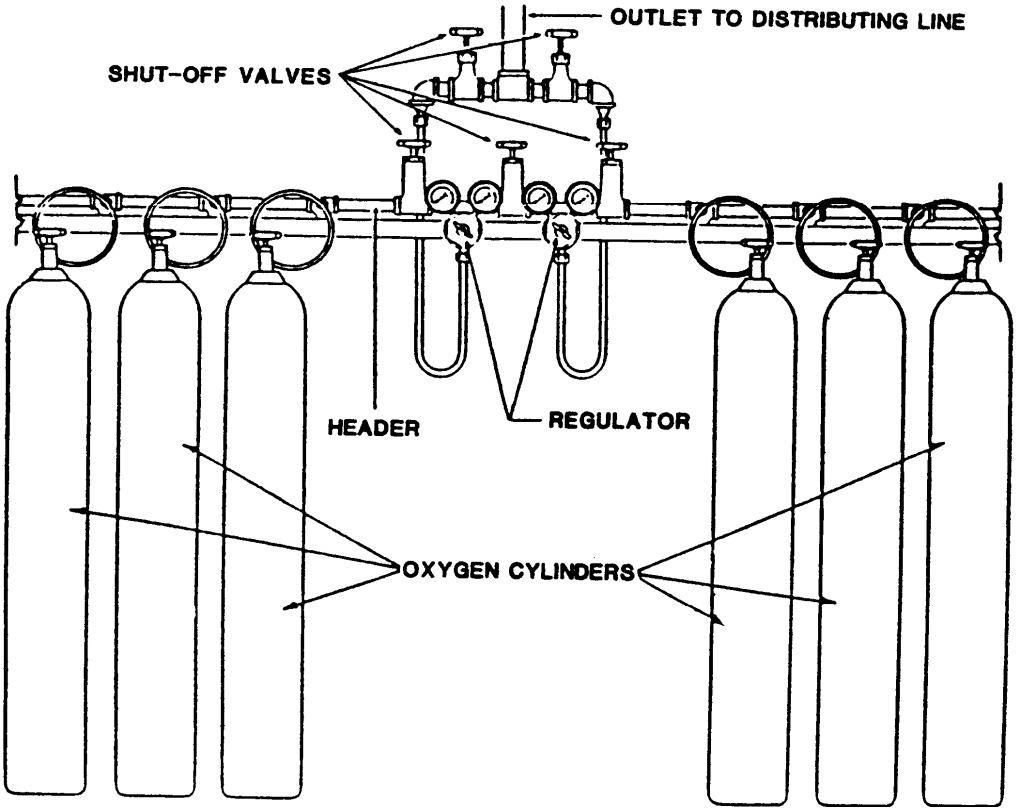

Figure 1. Stationary Oxygen Cylinder Manifold and Other Equipment

c. **ACETYLENE**. The acetylene is obtained from acetylene cylinders set up as shown in Figure 3. The acetylene is supplied to the welding stations through a pipe line equipped with station outlets as shown in Figure 2.

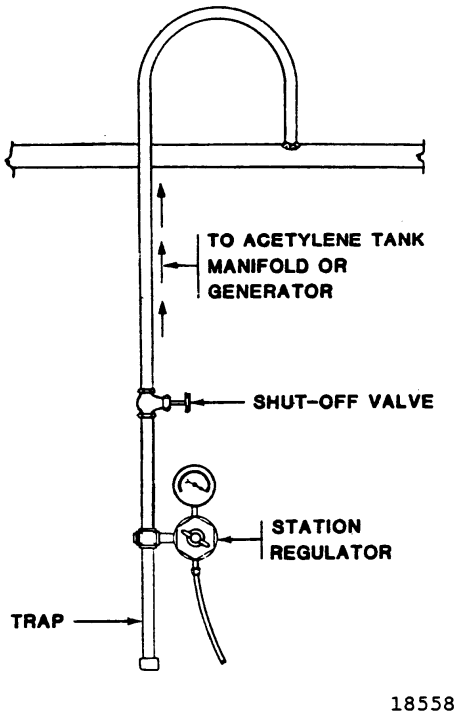

Figure 2. Station Outlet for Oxygen or Acetylene

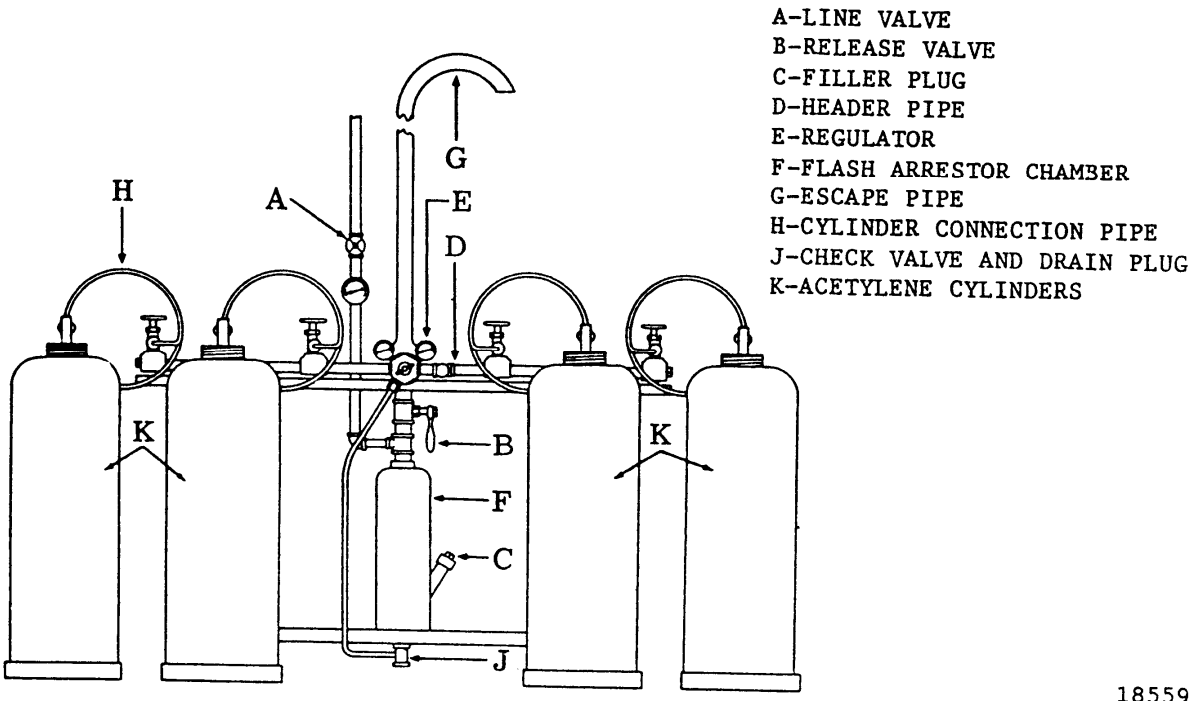

Figure 3. Stationary Acetylene Cylinder Manifold and Other Equipment

4. **PORTABLE WELDING EQUIPMENT.**

a. The portable oxyacetylene welding outfit consists of an oxygen cylinder and an acetylene cylinder with attached valves, regulators, gages, and hose (Figure 4). This equipment may be temporarily secured on the floor, or mounted in a two wheel all welded steel truck equipped with a platform which will support two large cylinders. The cylinders are secured by chains attached to the truck frame. A metal toolbox, welded to the frame, provides storage space for torch tips, gloves, fluxes, goggles, and necessary wrenches.

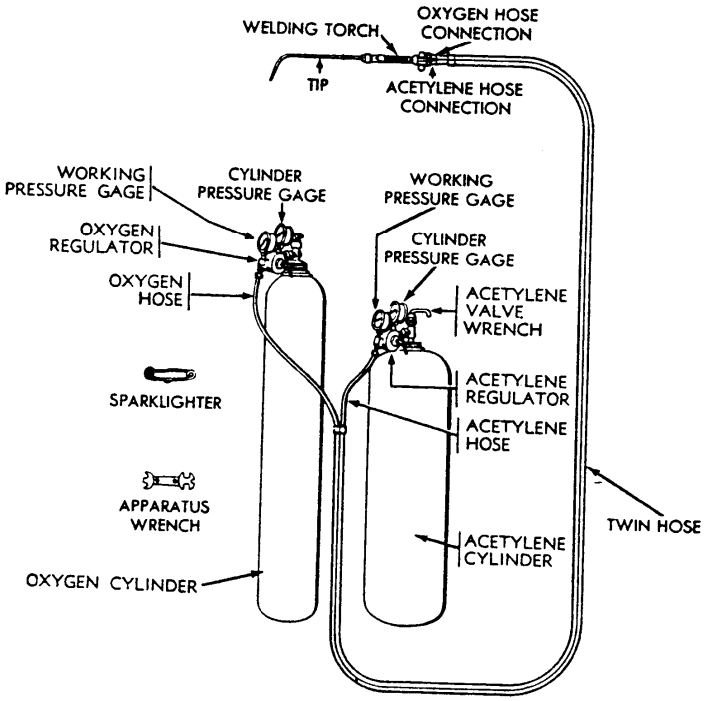

Figure 4. Portable Oxyacetylene Welding and Cutting Equipment

5. **ACETYLENE CYLINDERS.**

a. Acetylene is a compound of carbon and hydrogen (C_2H_2). It is a versatile industrial fuel gas used in cutting, heating, welding, brazing, soldering, flame hardening, metalizing and stress relieving applications. It is produced when calcium carbide is submerged in water or from petrochemical process. The gas from the acetylene generator is then compressed into cylinders or fed into a piping system.

WARNING

NEVER ADJUST AN ACETYLENE REGULATOR TO ALLOW A DISCHARGE GREATER THAN 15 PSI GAUGE.

b. Acetylene can become unstable when compressed in its gaseous state above 15 PSIG and therefore cannot be stored in a hollow cylinder under high pressure the way other gases are stored. Acetylene cylinders are filled with a porous material creating in effect a ”solid” as opposed to a ”hollow” cylinder. The porous filling is then saturated with liquid acetone.

c. When acetylene is pumped into the cylinder it is absorbed by the liquid acetone throughout the porous filling and is held in a stable condition (Figure 5). Acetylene cylinders must never be transfilled. Acetylene cylinders are available in capacities of 10, 40, 60, 75, 100, 130, 190, 225, 290, 300, 330, 360 and 390 cubic feet.

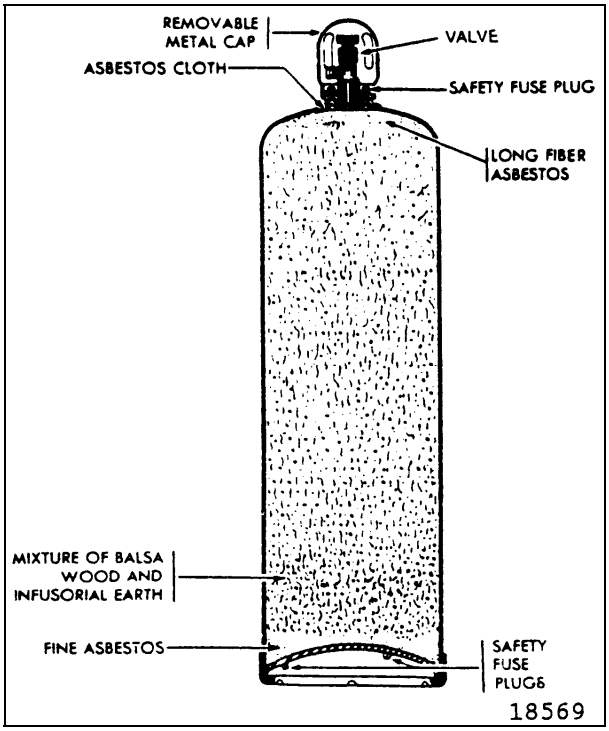

Figure 5. Acetylene Cylinder Construction

WARNING

All acetylene cylinders should be checked with a soap solution for leakage at the valves and safety fuse plugs. Leaking acetylene could accumulate in the storage room or other confined spaces and become a fire and explosion hazard.

d. The acetylene cylinders are equipped with safety plugs (Figure 5) having a small hole through the center. This hole is filled with a metal alloy which melts at approximately 212°F (100°C) or releases at 500 psi. When a cylinder is overheated the plug will melt and permit the acetylene to escape before a dangerous pressure can build up. The plug hole is too small to permit a flame to burn back into the cylinder if the escaping acetylene should become ignited.

e. The brass acetylene cylinder valves have squared stainless steel valve stems which can be fitted with a cylinder wrench and opened or closed when the cylinder is in use. The outlet of the valve is threaded for connection to an acetylene pressure regulator by means of a union nut. The regulator inlet connection gland fits against the face of the threaded cylinder connection and the union nut draws the two surfaces together. Whenever the threads on the valve connections are damaged to a degree that will prevent proper assembly to the regulator, the cylinder should be marked and set aside for return to the manufacturer.

f. A protective metal cap (Figure 5) screws onto the valve to prevent damage during shipment or storage.

6. **OXYGEN AND ITS PRODUCTION.**

a. Oxygen is a colorless, tasteless, and odorless gas that is slightly heavier than air. It is nonflammable but will support combustion with other elements. In its free state oxygen is one of the most common elements. The atmosphere is made up of approximately 21 parts of oxygen and 78 parts of nitrogen, the remainder being rare gases. Rusting of ferrous metals, discoloration of copper, and the corrosion of aluminum are all due to the action of atmospheric oxygen. This action is known as oxidation.

b. Production of oxygen.

(1) Oxygen is obtained commercially either by the liquid air process or by the electrolytic process.

(2) In the liquid air process air is compressed and cooled to a point where the gases become liquid. As the temperature of the liquid air is raised nitrogen in a gaseous form is given off first, since its boiling point is lower than that of liquid oxygen. These gases, having been separated, are then further purified and compressed into cylinders for use.

(3) In the electrolytic process water is broken down into hydrogen and oxygen by the passage of an electric current. The oxygen collects at the positive terminal and the hydrogen at the negative terminal. Each gas is collected and compressed into cylinders for use.

c. Oxygen Cylinders. A typical oxygen cylinder is shown in Figure 6. It is made of steel and has a capacity of 220 cubic feet at a pressure of 2,000 psi and a temperature of 70°F (21°C). The attached equipment provided by the oxygen supplier consists of an outlet valve, a removable metal cap for the protection of the valve during shipment or storage, and a low melting point safety fuse plug and disk.

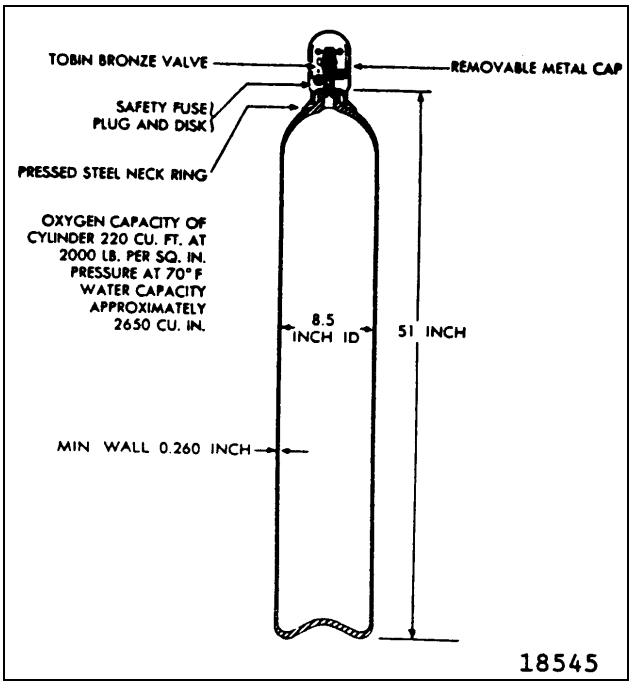

Figure 6. Oxygen Cylinder Construction

7. **OXYGEN AND ACETYLENE REGULATORS.**

a. General. The gases compressed in oxygen and acetylene cylinders are at pressures too high for oxyacetylene welding. Regulators are necessary to reduce pressure and control the flow of gases from the cylinders. Most regulators in use are either the single stage or the two stage type. Check valves should be installed between the torch hoses and their respective regulators to prevent flashback through the regulators.

b. Single Stage Oxygen Regulator.

(1) The mechanism of a single stage oxygen regulator (Figure 7) has a nozzle through which the high pressure gas passes, a valve seat to close off the nozzle, and balancing springs. Some types have a relief valve and an inlet filter to exclude dust and dirt.

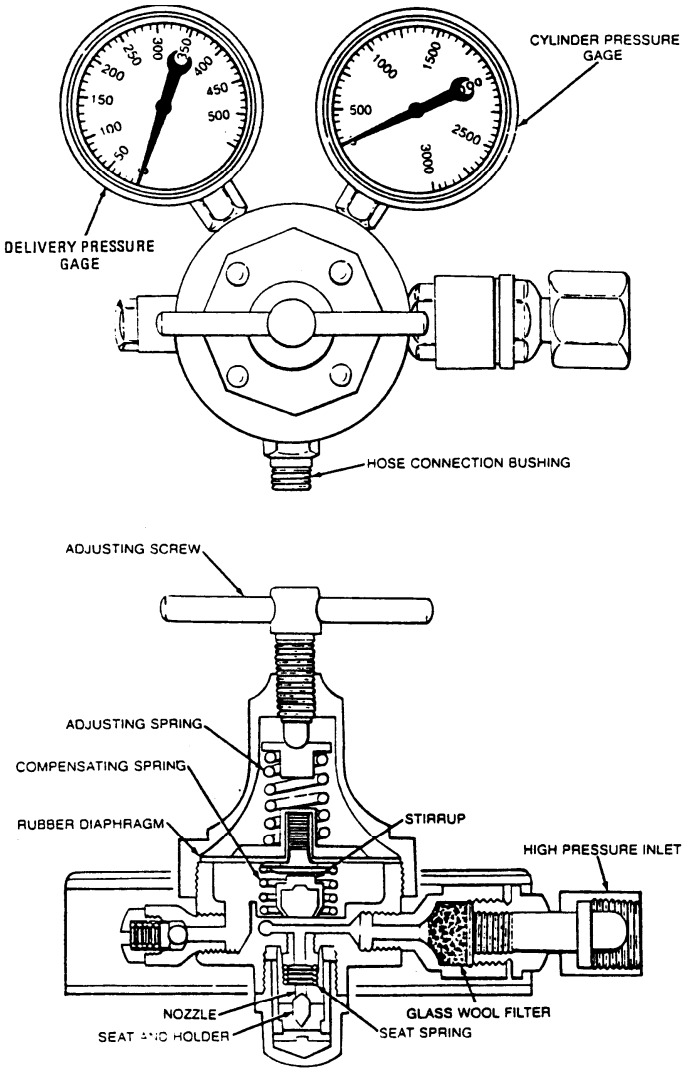

Figure 7. Single Stage Oxygen Regulator

(2) Pressure gages are provided to show the pressure in the cylinder or pipe line and the working pressure. In operation the working pressure falls as the cylinder pressure falls. For this reason the working pressure must be adjusted at intervals during welding operations. The oxygen regulator controls and reduces the oxygen pressure from any standard commercial oxygen cylinder containing pressures up to 3,000 psi.

(3) The high pressure gage, which is on the inlet side of the regulator, is graduated from 0 to 3,000 psi. The low pressure gage which is on the outlet side of the regulator, is graduated from 0 to 500 psi.

c. Operation of Single Stage Oxygen Regulator.

(1) The oxygen enters the regulator through the high pressure inlet connection and passes through a glass wool filter which removes dust and dirt. The seat which closes off the nozzle is not raised until the adjusting screw is turned in. Turning in the adjusting screw applies pressure to the adjusting spring which bears down on the rubber diaphragm.

(2) The diaphragm presses downward on the stirrup and overcomes the pressure on the compensating spring. When the stirrup is forced downward the passage through the nozzle is opened, and oxygen is allowed to flow into the low pressure chamber of the regulator. From here the oxygen passes through the regulator outlet and the hose to the torch.

(3) A certain set pressure must be maintained in the low pressure chamber of the regulator so that oxygen will continue to be forced through the orifices of the torch, even if the torch needle valve is open. This pressure is indicated on the working pressure gage of the regulator and depends on the position of the regulator adjusting screw. The pressure is increased by turning the adjusting screw to the right and decreased by turning this screw to the left.

NOTE

Regulators used at stations to which gases are piped from an oxygen manifold, acetylene manifold, or acetylene generator have only one low pressure gage because the pipe line pressures are usually set at 15 psi for acetylene and approximately 200 psi for oxygen.

d. Two Stage Oxygen Regulator.

(1) The operation of the two stage regulator (Figure 8) is similar in principle to that of the single stage regulator. The difference is that the total pressure decrease takes place in two steps instead of one.

(2) On the high pressure side the pressure is reduced from cylinder pressure to intermediate pressure.

(3) On the low pressure side the pressure is reduced from intermediate pressure to working pressure. Because of the two stage pressure control the working pressure is held constant, and pressure adjustment during welding operations is not required.

e. Acetylene Regulator.

WARNING

Acetylene should not be used at pressures exceeding 15 psi.

(1) This regulator controls and reduces the acetylene pressure from any standard commercial cylinder containing pressures up to and including 500 psi. It is of the same general design as the oxygen regulator but will not withstand such high pressures.

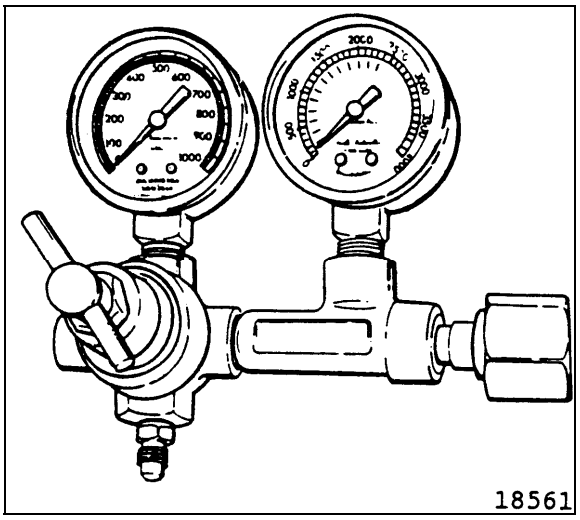

Figure 8. Two Stage Oxygen Regulator

(2) The high pressure gage, on the inlet side of the regulator, is graduated from 0 to 500 psi.

(3) The low pressure gage, on the outlet side of the regulator, is graduated from 0 to 30 psi.

8. **OXYACETYLENE WELDING TORCH.**

a. General. The oxyacetylene welding torch is used to mix oxygen and acetylene in definite proportions and to control the volume of these gases burning at the welding tip. The torch has two needle valves, one for adjusting the flow of oxygen and one for adjusting the flow of acetylene. In addition, there are two tubes, one for oxygen, the other for acetylene; a mixing head; inlet nipples for the attachment of hoses; a tip; and a handle. The tubes and handle are of seamless hard brass, copper-nickel alloy, stainless steel, or other noncorrosive metal of adequate strength. The tips, which are available in different sizes, are described in **WELDING TIPS AND MIXERS**.

9. **TYPES OF TORCHES.**

a. General. There are two general types of welding torches; the low pressure or injector type, and the equal pressure type.

b. In the low pressure or injector type (Figure 9) the acetylene pressure is less than 1 psi. A jet of high pressure oxygen is used to produce a suction effect to draw in the required amount of acetylene. This is accomplished by designing the mixer in the torch to operate on the injector principle. The welding tips may or may not have separate injectors designed integrally with each tip.

c. Equal pressure torch (Figure 10) is designed to operate with equal pressures for the oxygen and acetylene. The pressure ranges from 1 to 15 psi. This torch has certain advantages over the low pressure type in that the flame desired can be more readily adjusted, and since equal pressures are used for each gas the torch is less susceptible to flashbacks.

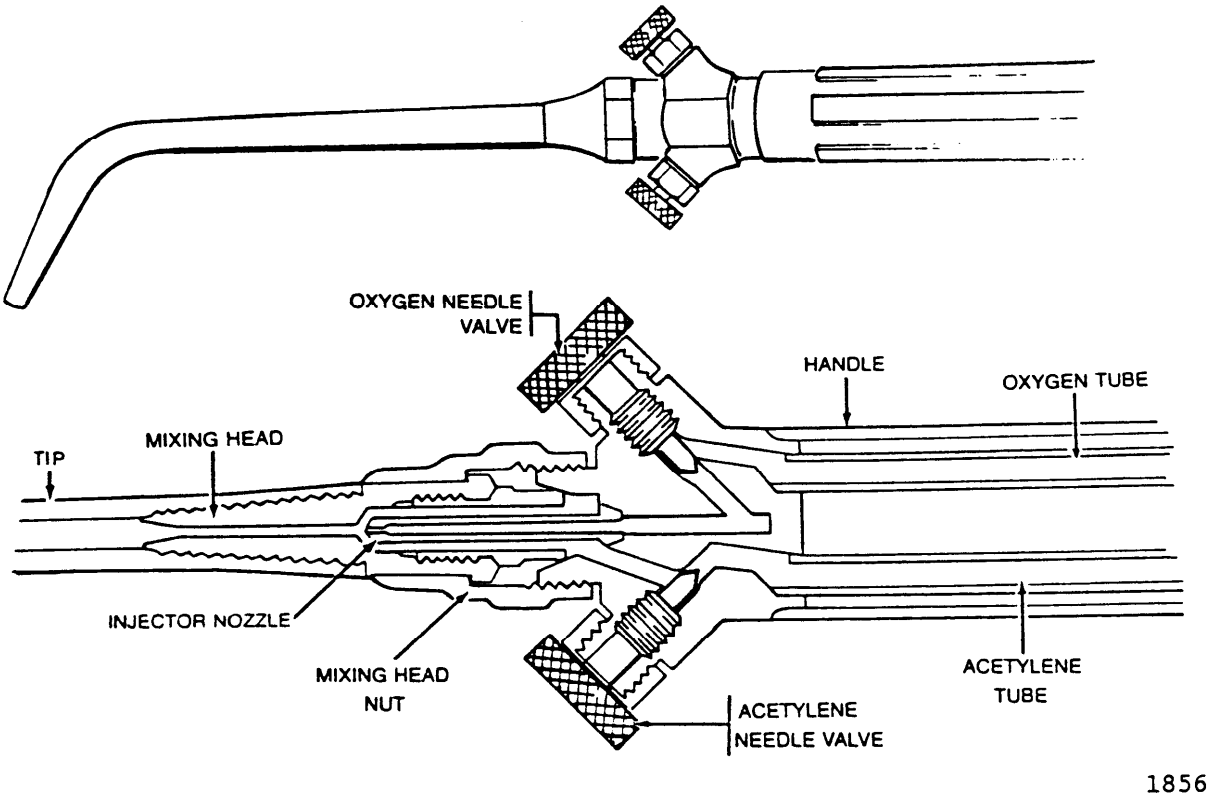

Figure 9. Mixing Head for Injector Type Welding Torch

10. **WELDING TIPS AND MIXERS.**

a. Welding and cutting tips, such as the one shown in Figure 11, are made of hard drawn electrolytic copper or 95 percent copper and 5 percent tellurium. They are made in various styles and types, some having a one piece tip with either a single orifice or a number of orifices, and others with two or more tips attached to one mixing head. The diameters of the tip orifices differ in order to control the quantity of heat and the type of flame. These tip sizes are designated by numbers which are arranged according to the individual manufacturer's system. In general, the smaller the number, the smaller the tip orifice.

b. A mixer (Figure 10) is frequently provided in tip mixer assemblies to assure the correct flow of mixed gases for each size tip. In this tip mixer assembly the mixer is assembled with the tip for which it has been drilled and then screwed onto the torch head. The universal type mixer is a separate unit which can be used with tips of various sizes.

11. **HOSE.**

a. The hose used to make the connection between the regulators and the torch is made especially for this purpose. It is built to withstand high internal pressures. It is strong, nonporous, light, and flexible to permit ready manipulation of the torch. The rubber used in its manufacture is chemically treated to remove free sulfur so as to avoid possible spontaneous combustion. The hose is not impaired by prolonged exposure to light.

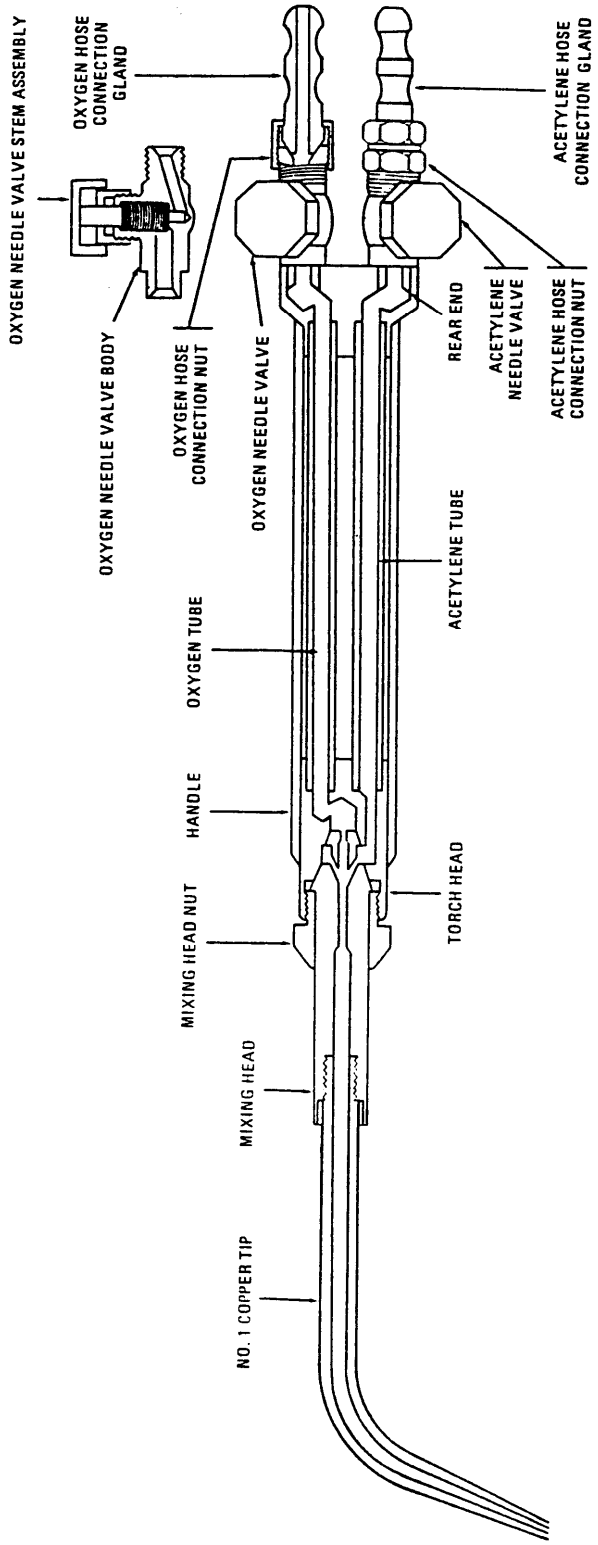

Figure 10. Equal Pressure Type, General Purpose Welding Torch

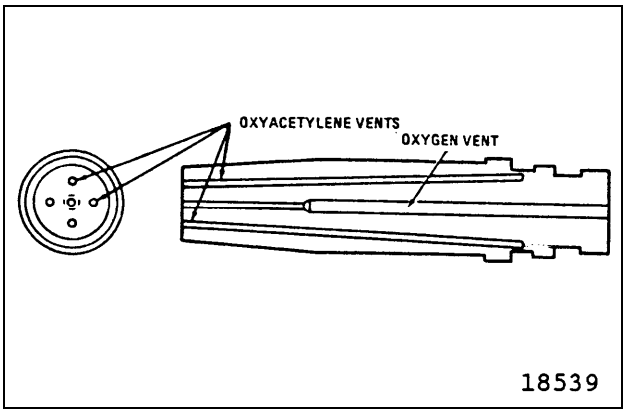

Figure 11. Diagram of Oxyacetylene Cutting Tip

b. The oxygen hose is green and the acetylene hose is red. The hose is a rubber tube with braided or wrapped cotton or rayon reinforcements and a rubber covering. For heavy duty welding and cutting operations, requiring 1/4 to 1/2 inch internal diameter hose, three to five plies of braided or wrapped reinforcements are used. One ply is used in the 1/8 to 3/16 inch hose for light torches.

c. Hoses are provided with connections at each end so that they may be connected to their respective regulator outlet and torch inlet connections. To prevent a dangerous interchange of acetylene and oxygen hoses all threaded fittings used for the acetylene hook up are left hand, and all threaded fittings for the oxygen hook up are right hand.

d. Welding and cutting hose is obtainable as a single hose for each gas or with the hoses bonded together along their length under a common outer rubber jacket. This type prevents the hose from kinking or becoming entangled during the welding operation.

12. **SETTING UP THE WELDING EQUIPMENT.**

a. When setting up welding and cutting equipment it is important that all operations be performed systematically in order to avoid mistakes and possible trouble. The setting up procedures given in **CYLINDERS** through **ADJUSTMENT OF WORKING PRESSURE** below will assure safety to the operator and the apparatus.

13. **CYLINDERS.**

a. Place the oxygen and the acetylene cylinders, if they are not mounted on a truck, on a level floor and tie them firmly to a work bench post, wall, or other secure anchorage to prevent their being knocked or pulled over.

WARNING

Do not stand facing cylinder valve outlets of oxygen, acetylene, or other compressed gases when opening them.

b. Remove the valve protecting caps.

c. “Crack” the cylinder valves by opening slightly for an instant to blow out any dirt or foreign matter that may have accumulated during shipment or storage.

d. Close the valves and wipe off the connection seats with a clean cloth.

14. **PRESSURE REGULATORS.**

a. Connect the acetylene regulator to the acetylene cylinder and the oxygen regulator to the oxygen cylinder. Use either a regulator wrench or a close fitting wrench and tighten the connecting nuts sufficiently to prevent leakage.

b. Install safety check valves on oxygen/acetylene regulators before attaching individual hoses.

c. Connect the red hose to the acetylene regulator and the green hose to the oxygen regulator. Screw the connecting nuts up tightly to insure leak proof seating. Note that the acetylene hose connection has left hand threads.

WARNING

If it is necessary to blow out the acetylene hose, do it in a well ventilated place, free of sparks, flame, or other sources of ignition.

d. Release the regulator screws to avoid damage to the regulators and gages.

WARNING

Do not stand directly in front or in back of the regulator when opening the cylinder valves. Stand off to one side.

e. Slowly open the cylinder valves. Read the high pressure gages to check the cylinder gas pressure. Blow out the oxygen hose by turning the regulator screw in and then release the regulator screw.

15. **TORCH.**

a. Connect the red acetylene hose to the torch needle valve which is stamped AC.

b. Connect the green oxygen hose to the torch needle valve which is stamped OX.

c. Test all hose connections for leaks at the regulators or torch valves by turning both regulators screws in with the torch needle valves closed.

d. Release the regulator screws after testing and drain both hose lines by opening the torch needle valves.

e. Slip the tip nut over the mixing head, screw tip into mixing head and assemble in the torch body.

f. Tighten by hand and adjust the tip to the proper angle. Secure this adjustment by tightening with the tip nut wrench.

WARNING

Purge both acetylene and oxygen lines (hoses) prior to igniting the torch. Failure to do this can cause serious injury to personnel and damage to the equipment.

16. **ADJUSTMENT OF WORKING PRESSURE.**

a. Adjust the acetylene working pressure by opening the acetylene needle valve in the torch and turning the regulator screw to the right, then adjust the acetylene regulator to the required pressure for the tip size to be used (see Table 1). Close the needle valve.

Table 1. Oxyacetylene Cutting Information

Plate Thickness (inch)	Cutting Tip[1] (size number)	Oxygen (psi)	Acetylene (psi)	Hand-cutting speed (inch per minute)
1/4	0	30	3	16 to 18
3/8	1	30	3	14.5 to 16.5
1/2	1	40	3	12 to 14.5
3/4	2	40	3	12 to 14.5
1	2	50	3	8.5 to 11.5
1-1/2	3	45	3	6.0 to 7.5
2	4	50	3	5.5 to 7.0
3	5	45	4	5.0 to 6.5
4	5	60	4	4.0 to 5.0
5	6	50	5	3.5 to 4.5
6	6	55	5	3.0 to 4.0
8	7	60	6	2.5 to 3.5
10	7	70	6	2.0 to 3.0
12	8	70	6	1.5 to 2.0

[1] Various manufacturers do not adhere to the numbering of tips as set forth in this table; therefore, some tips may carry different identification numbers.

b. Adjust the oxygen working pressure in the same manner.

17. **SHUTTING DOWN WELDING APPARATUS.**

a. Shut off the gases. First close the acetylene valve and then the oxygen valve on the torch. Then close the acetylene and oxygen cylinder valves.

b. Drain the regulators and hoses by the following procedures:

c. Open the torch acetylene valve until the gas stops flowing, then close the valve.

d. Next open the torch oxygen valve to drain the oxygen regulator and hose. When gas stops flowing, close the valve.

e. When the above operations are performed properly both high and low pressure gages on the acetylene and oxygen regulators will register zero.

f. Release the tension on both regulator screws by turning the screws to the left until they rotate freely.

g. Coil the hoses without kinking them and suspend them on a suitable holder or hanger. Avoid upsetting the cylinders to which they are attached.

18. **REGULATOR MALFUNCTIONS AND CORRECTIONS.**

WARNING

Regulators with leakage of gas between the regulator seat and the nozzle should be replaced immediately to avoid injury to personnel. With acetylene regulators this leakage is particularly dangerous because acetylene at high pressure in the hose is an explosion hazard.

a. Leakage of gas between the regulator seat and the nozzle is the principal trouble encountered with regulators. It is indicated by a gradual increase in pressure on the working pressure gage when the adjusting screw is fully released or is in position after adjustment. This defect, commonly called “creeping regulator”, is caused by bad valve seats or by foreign matter lodged between the seat and the nozzle.

b. The leakage of gas, as described above, can be corrected as outlined below:

c. Remove and replace the seat if it is worn, cracked, or otherwise damaged.

d. If the malfunction is caused by fouling with dirt or other foreign matter, clean the seat and nozzle thoroughly and blow out any dust or dirt in the valve chamber.

e. The procedure for removing valve seats and nozzles will vary with the make or design.

f. Broken or buckled gage tubes and distorted or buckled diaphragms are usually caused by backfire at the torch, leaks across the regulator seats, or by failure to release the regulator adjusting screw fully before opening the cylinder valves.

g. Defective bourdon tubes in the gages are indicated by improper action of the gages or by escaping gas from the gage case. Gages with defective bourdon tubes should be removed and replaced by new gages because satisfactory repairs cannot be made without special equipment.

h. Buckled or distorted diaphragms cannot be adjusted properly and should be replaced with new ones. Rubber diaphragms can be replaced easily by removing the spring case with a vise or wrench. Metal diaphragms are sometimes soldered to the valve case and their replacement is a factory or special repair shop job. It should not be attempted by anyone unfamiliar with the work.

19. **TORCH MALFUNCTIONS AND CORRECTIONS.**

a. Improper functioning of welding torches is usually due to one or more of the following causes: leaking valves, leaks in the mixing head seat, scored or out-of-round welding tip orifices, clogged tubes or tips, and damaged inlet connection threads.

b. Corrective measures for these common torch defects are described below.

WARNING

Defects in oxyacetylene welding torches which are sources of gas leaks should be corrected immediately, as they may result in flashbacks or backfires, with resultant injury to the operator and/or damage to the welding apparatus.

20. **LEAKING VALVES.**

a. This condition is due to worn or bent valve stems, damaged seats, or a combination of both. Loose packing will also cause leaks around the valve handle. Such leaks are indicated when the gases continue to flow after the valves are closed.

b. Bent or worn valve stems should be replaced and damaged seats should be refaced.

c. Loose packing may be corrected by tightening the packing nut or by installing new packing and then tightening the packing nut.

21. **LEAKS IN THE MIXING HEADS.**

a. This condition is indicated by the popping out of the flame and by emission of sparks from the tips accompanied by a squealing noise. Leaks in the mixing head will cause improper mixing of the oxygen and acetylene which will cause flashbacks; i.e., ignition and burning of the gases back of the mixing head in the torch tubes.

b. A flashback causes the torch head and handle to suddenly become very hot. This defect is corrected by reaming out and truing the mixing head seat.

CAUTION

This work should be done by manufacturer because special reamers are required for truing these seats.

22. **SCORED OR OUT-OF-ROUND TIP ORIFICES.**

a. Tips in this condition will cause the flame to be irregular even after the tip has been thoroughly cleaned. They cannot be repaired and must be replaced.

23. **CLOGGED TUBES AND TIPS.**

a. This condition is due to carbon deposits caused by flashbacks or backfire, or to the presence of foreign matter that has entered the tubes through the hoses. If the tubes or tips are clogged, greater working pressures will be needed to produce the flame required for a given tip. The flame produced will be distorted.

b. To correct this condition the torch should be disassembled so that the tip, mixing head, valves, and hose can be cleaned and blown out with compressed air at a pressure of 20 to 30 psi.

c. The tip and mixing head should be cleaned either with a cleaning drill of the proper size or with soft copper or brass wire, and then blown out with compressed air. The cleaning drills should be approximately one drill size smaller than the tip orifice to avoid enlarging the orifice during cleaning.

24. **DAMAGED INLET CONNECTION THREADS.**

a. Leaks due to damaged inlet connection threads can be detected by opening the cylinder valves and keeping the needle valves closed. Such leaks will cause the regulator pressure to drop.

b. If the threads are damaged, the hose connection at the torch inlet will be difficult to impossible to tighten. To correct this defect the threads should be recut and the hose connections thoroughly cleaned.

WARNING

Damaged inlet connection threads may cause fires by ignition of the leaking gas, resulting in injury to the welding operator and/or damage to the equipment.

25. **OXYACETYLENE CUTTING EQUIPMENT.**

26. **OXYACETYLENE CUTTING TORCH AND OTHER CUTTING EQUIPMENT.**

a. The cutting torch (Figure 12) like the welding torch has a tube for oxygen and one for acetylene; in addition, there is a tube for high pressure oxygen, together with a cutting tip or nozzle.

(1) The tip (Figure 13) is provided with a center hole through which a jet of pure oxygen passes.

(2) Mixed oxygen and acetylene pass through holes surrounding the center hole for the preheating flames. The number of orifices for oxyacetylene flames ranges from two to six, depending on the purpose for which the tip is used.

(3) The cutting oxygen is controlled by a trigger or lever operated valve.

(4) The cutting torch is furnished with interchangeable tips for cutting steel from less than 1/4 inch to more than 12 inches in thickness.

b. A cutting attachment fitted to a welding torch in place of the welding head is shown in Figure 13.

27. **OPERATION OF CUTTING EQUIPMENT.**

a. Attach the required cutting tip to the torch and adjust the oxygen and acetylene pressures in accordance with Table 1.

b. Adjust the preheating flame to neutral.

c. Hold the torch so that the cutting oxygen lever or trigger can be operated with one hand. Use the other hand to steady and maintain the position of the torch head to the work. Keep the flame at a 90 degree angle to the work in the direction of travel, with the inner cones of the preheating flames about 1/16 inch above the end of the line to be cut. Hold this position until the spot has been raised to a bright red heat and then slowly open the cutting oxygen valve.

d. If the cut has been started properly a shower of sparks will fall from the opposite side of the work. Then move the torch at a speed which will allow the cut to continue penetrating the work. A good cut will be clean and narrow.

e. When cutting billets, round bars, or heavy sections, time and gas are saved if a burr is raised with a chisel at the point where the cut is to start. This small portion will heat quickly and cutting will start immediately. A welding rod can also be used to start a cut on heavy sections. When so used, it is called a ”starting rod”.

f. Oxygen and acetylene are provided in the welding areas outlined in b and c below.

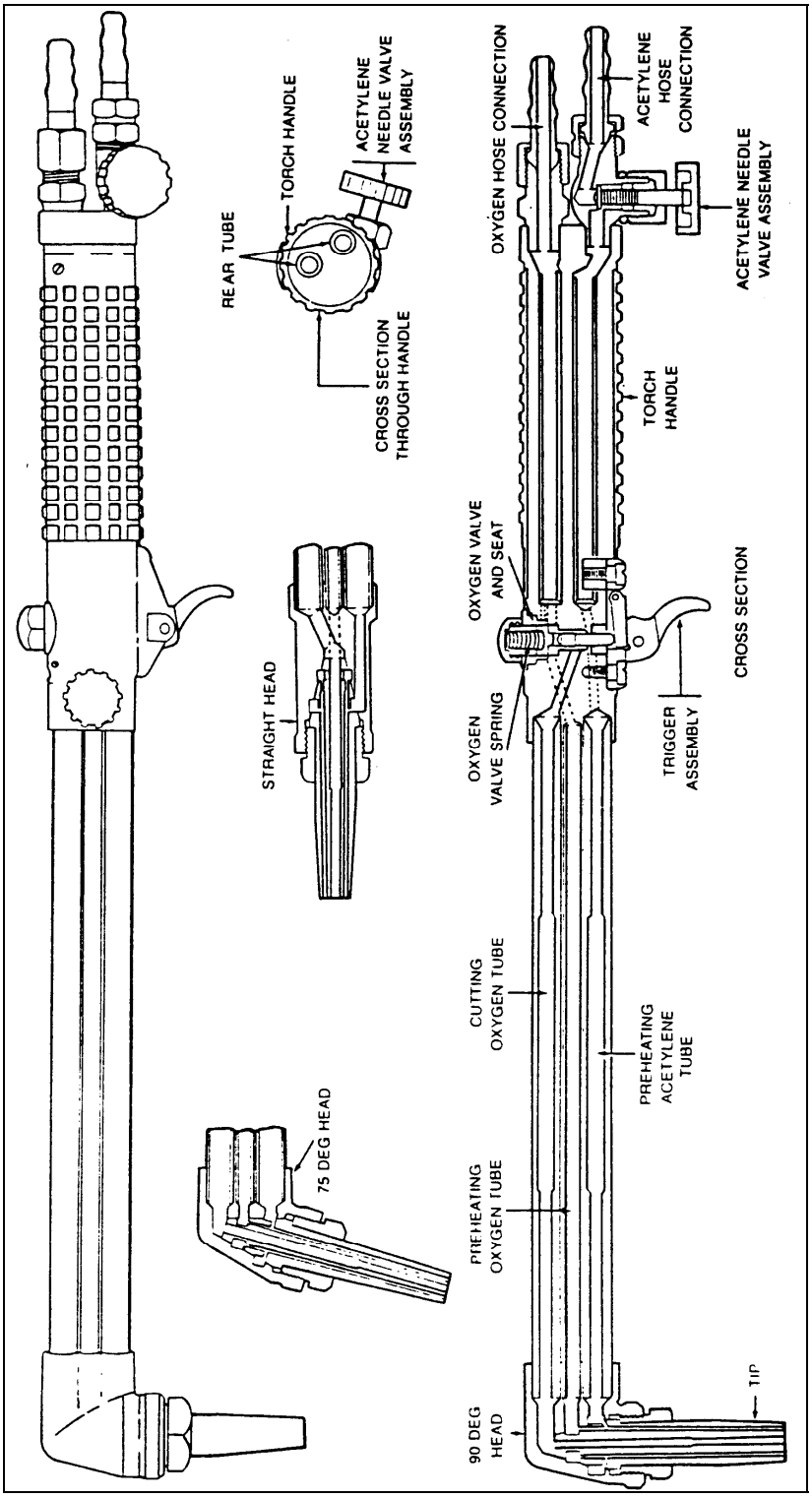

Figure 12. Oxyacetylene Cutting Torch

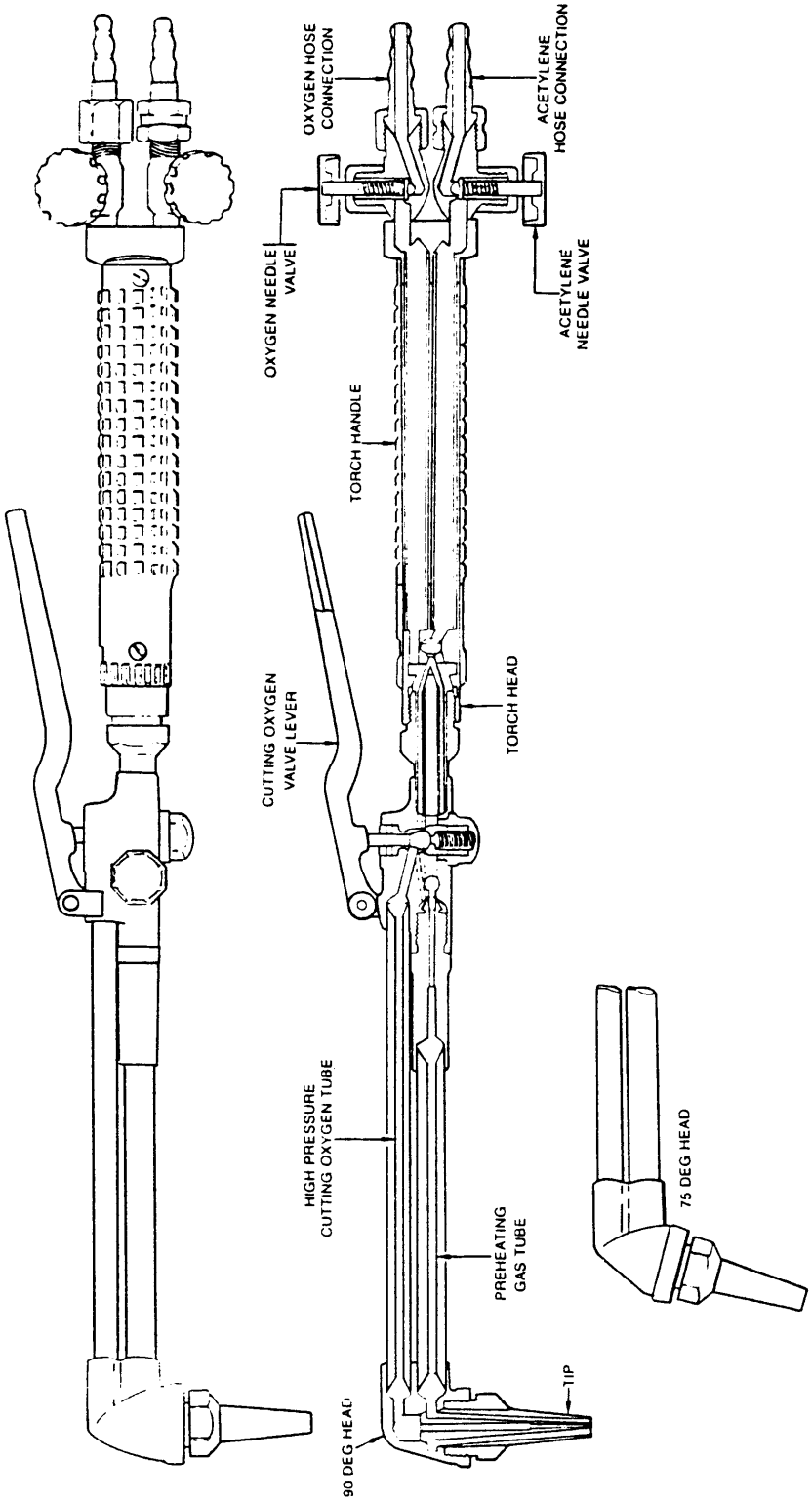

Figure 13. Cutting Attachment for Welding Torch

28. **OXYACETYLENE WELDING, CUTTING, AND BRAZING PROCESS AND TECHNIQUES.**

29. **GENERAL WELDING PROCEDURE.**

a. The edges to be welded by the oxyacetylene welding process must be properly prepared, aligned, and correctly spaced.

b. A good weld requires the proper torch tip, correct flame adjustment, and skillful rod and torch manipulation.

c. Under some conditions special procedures are necessary such as preheating, slow cooling, or stress relieving.

d. When welding certain metals a flux is required to remove oxides and slag from the molten metal, and to protect the puddle from the action of atmospheric oxygen.

e. When welding light sheet metal the edges are normally prepared by flanging. Light sheet metal requires no filler. In welding heavier sheets and plates filler metals are required, and the edges being welded must be prepared so that the filler metal will penetrate to the joint root.

NOTE

Oxygen pressures are approximately the same as acetylene pressures in the balanced pressure type torch. Pressures for specific types of mixing heads and tips are specified by the manufacturer.

30. **WORKING PRESSURES FOR WELDING OPERATIONS.**

a. The required working pressure increases as the tip orifice increases. The relation between the tip number and the diameter of the orifice may vary with different manufacturers.

b. The smaller number always indicates the smaller diameter.

c. For the approximate relation between the tip number and the required oxygen and acetylene pressures, see Tables 2 and 3.

31. **FLAME ADJUSTMENT AND FLAME TYPES.**

32. **LIGHTING THE TORCH.**

a. To start the welding torch hold it so as to direct the flame away from the operator, gas cylinders, hose, or any flammable material. Open the acetylene valve 1/4 turn and ignite the gas by striking the sparklighter in front of the tip.

b. Since the oxygen valve is closed the acetylene is burned by the oxygen in the air. There is not sufficient oxygen to provide complete combustion so the flame is smoky and produces a soot of fine unburned carbon. Continue to open the acetylene valve slowly until the flame burns clean. The acetylene flame is long, bushy and has a yellowish color. This pure acetylene flame is unsuitable for welding.

c. Slowly open the oxygen valve. The flame changes to a bluish-white and forms a bright inner cone surrounded by an outer flame envelope or sheath flame. The inner cone develops the high temperature required for welding. The outer envelope contains varying amounts of incandescent carbon soot, depending on the proportions of oxygen and acetylene in the flame.

Table 2. Low Pressure or Injector Type Torch

TIP SIZE NUMBER	OXYGEN PSI	ACETYLENE PSI
0	1	9
1	1	9
2	1	10
3	1	10
4	1	11
5	1	12
6	1	14
7	1	16
8	1	19
10	1	21

Table 3. Balanced Pressure Type Torch

TIP SIZE NUMBER	ACETYLENE PSI
1	2
2	2
3	3
4	3
5	3.5
6	3.5
7	5
8	7
9	9
10	12

d. The temperature produced is so high (up to 6,300°F (3,482°C)) that the products of complete combustion (i.e., carbon dioxide and water) are decomposed into their elements. Acetylene burning in the inner cone with oxygen supplied by the torch forms carbon monoxide and hydrogen. As these gases cool from the high temperatures of the inner cone they burn completely with the oxygen supplied by the surrounding air and form the lower temperature sheath flame. The carbon monoxide burns to form carbon dioxide and hydrogen burns to form water vapor. Since the inner cone contains only carbon monoxide and hydrogen, which are reducing in character (i.e., able to combine with and remove oxygen), oxidation of the metal will not occur within this zone.

33. **TYPES OF FLAMES.**

a. Three types of oxyacetylene flames, shown in Figure 14 are commonly used for welding. These are neutral, reducing (or carburizing), and oxidizing flames.

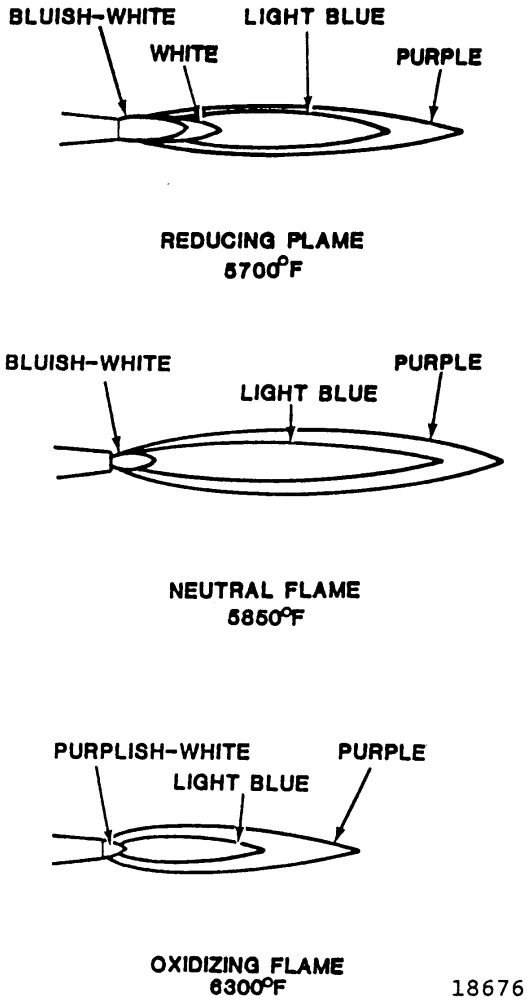

Figure 14. Oxyacetylene Flames

34. **NEUTRAL FLAME.**

a. The welding flame should be adjusted to neutral before either the carburizing or oxidizing flame mixture is set. There are two clearly defined zones in the neutral flame. The inner zone consists of a luminous cone that is bluish-white. Surrounding this is a light blue flame envelope or sheath. This neutral flame is obtained by starting with an excess acetylene flame in which there is a ”feather” extension of the inner cone. When the flow of acetylene is decreased or the flow of oxygen increased the feather will tend to disappear. The neutral flame begins when the feather disappears.

b. The neutral or balanced flame is obtained when the mixed torch gas consists of approximately one volume of oxygen and one volume of acetylene. It is obtained by gradually opening the oxygen valve to shorten the acetylene flame until a clearly defined inner cone is visible. For a strictly neutral flame no whitish streamers should be present at the end of the cone. In some cases it is desirable to leave a slight acetylene streamer or ”feather” (1/16 to 1/8 inch long) at the end of the cone to insure that the flame is not oxidizing. The volume ratio of oxygen to acetylene in forming a neutral flame is 1.04 to 1.14. This flame adjustment is used for most welding operations and for preheating during cutting operations. When welding steel with this flame the molten metal puddle is quiet and clear. The metal flows easily without boiling, foaming or sparking.

c. In the neutral flame the temperature at the inner cone tip is approximately 5,850°F(3,232°C), while at the end of the outer sheath or envelope the temperature drops to approximately 2,300°F (1,260°C). This variation within the flame permits some temperature control when making a weld. The position of the flame to the molten puddle can be changed, and the heat controlled in this manner.

35. **REDUCING OR CARBURIZING FLAME.**

a. The reducing or carburizing flame is obtained when slightly less than one volume of oxygen is mixed with one volume of acetylene. The volume ratio is 0.85 to 0.95. This flame is obtained by first adjusting to neutral and then slowly opening the acetylene valve until an acetylene streamer or ”feather” is at the end of the inner cone. The length of this excess streamer indicates the degree of flame carburization. For most welding operations this streamer should be no more than half the length of the inner cone.

b. The reducing or carburizing flame can always be recognized by the presence of three distinct flame zones. There is a clearly defined bluish-white inner cone, a white intermediate cone indicating the amount of excess acetylene, and a light blue outer flame envelope. This type of flame burns with a coarse rushing sound and has a temperature of approximately 5,700°F(3,149°C) at the inner cone tips.

c. When a strongly carburizing flame is used for welding, the metal boils and is not clear. The steel is absorbing carbon from the flame then gives off heat which causes the metal to boil. When cold the weld has the properties of high carbon steel, being brittle and subject to cracking.

d. A slight feather flame of acetylene is sometimes used for backhand welding (refer to **BACKHAND WELDING**). A carburizing flame is advantageous for welding high carbon steel for hard facing operations, and for welding such nonferrous alloys as nickel and Monel. When used in silver solder and soft solder operations only the intermediate and outer flame cones are used. They impart a low temperature soaking heat to the parts being soldered.

36. **OXIDIZING FLAME.**

a. The oxidizing flame is produced when slightly more than one volume of oxygen is mixed with one volume of acetylene. The volume ratio is 1.7 to 1.15. To obtain this type of flame the torch should first be adjusted to give a neutral flame. The flow of oxygen is then increased until the inner cone is shortened to about one-tenth of its original length. When the flame is properly adjusted the inner cone is pointed and slightly purple. An oxidizing flame can also be recognized by its distinct hissing sound. The temperature of this flame is approximately 6,300°F(3,482°C) at the inner cone tip.

b. When applied to steel an oxidizing flame causes the molten metal to foam and give off sparks. This indicates that the excess oxygen is combining with the steel and burning it. An oxidizing flame should not be used for welding steel because the deposited metal will be porous, oxidized, and brittle. This flame will ruin most metals and should be avoided, except as noted in (c) below.

c. A slightly oxidizing flame is used in torch brazing of steel and cast iron. A stronger oxidizing flame is used in the welding of brass or bronze.

d. In most cases the amount of excess oxygen used in this flame must be determined by observing the action of the flame on the molten metal.

37. **OXYACETYLENE WELDING RODS.**

a. The welding rod which is melted into the welded joint plays an important part in the quality of the finished weld. Good welding rods are designed to permit free flowing metal which will unite readily with the base metal to produce sound, clean welds of the correct composition.

b. Welding rods are made for various types of carbon steel, for cast iron, aluminum, bronze, stainless steel and other metals, and for hard surfacing.

38. OXYACETYLENE WELDING FLUXES.

a. The oxides of all the ordinary commercial metals and alloys except steel have higher melting points than the metals themselves and are usually pasty (some are even infusible) when the metal is quite fluid and at the proper welding temperature. An efficient flux will combine with oxides to form a fusible slag having a melting point lower than the metal so that it will flow away from the immediate field of action. This slag, incidentally, forms a coating over the molten metal and thus serves as a protection against atmospheric oxidation. The chemical characteristics and melting points of the oxides of different metals vary greatly and therefore there can be no one flux that will be satisfactory for all metals.

b. The melting point of a flux must be lower than that of either the metal or the oxides formed, so that it will be liquid. The ideal flux has exactly the right fluidity at the welding temperature and thus tends to blanket the molten metal from atmospheric oxidation. Such a flux remains close to the weld area instead of flowing over the base metal for some distance from the weld.

c. Fluxes usually are packed in powder form in tin cans. Some of them lose their welding properties if exposed too long to the atmosphere, and in such cases small containers are best.

d. Fluxes differ in their composition according to the metals with which they are to be used. In cast iron welding a slag forms on the surface of the puddle and the flux serves to break this up. Equal parts of carbonate of soda and bicarbonate of soda make a good compound for this purpose. Nonferrous metals usually require a flux. Copper also requires a filler rod containing enough phosphorus to produce a metal free from oxides. Borax which has been melted and powdered is often used as a flux with copper alloys. A good flux is required with aluminum because there is a tendency for the heavy slag formed to mix with the melted aluminum and weaken the weld. For sheet aluminum welding, it is customary to dissolve the flux in water and apply it to the rod. After welding aluminum, all traces of the flux should be removed.

39. **BRAZE WELD TECHNIQUES.**

40. **FOREHAND WELDING.**

a. In this method the welding rod precedes the torch. The torch is held at an angle of approximately 30 degrees from the vertical, in the direction of welding as shown in Figure 15. The flame is pointed in the direction of welding and directed between the rod and the molten puddle. This position permits uniform preheating of the plate edges immediately ahead of the molten puddle. By moving the torch and the rod in opposite semicircular paths the heat can be carefully balanced to melt the end of the rod and the side walls of the plate into a uniformly distributed molten puddle. The moving flame melts off a short length of the rod and adds it to the molten puddle. The heat which is reflected backwards from the rod keeps the metal molten. The metal is distributed evenly to both edges being welded and to the deposited weld by the motion of the tip and rod.

b. This method is satisfactory for welding sheets and light plates in all positions. Some difficulties are encountered in welding heavier plates for the reasons given below:

c. In forehand welding the edges of the plate must be beveled to provide a wide V with a 90 degree included angle. This edge preparation is necessary to insure satisfactory melting of the plate edges, good penetration, and fusion of the weld metal to the base metal.

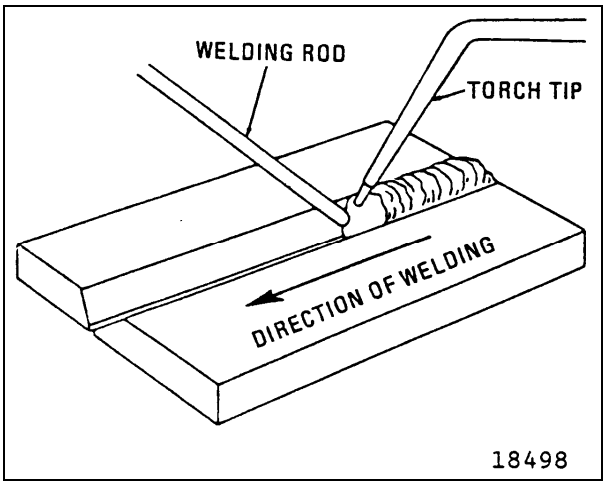

Figure 15. Forehand Welding

d. Because of this wide V a relatively large molten puddle is required. It is difficult to obtain a good joint when the puddle is too large.

41. **BACKHAND WELDING.**

a. In this method the torch precedes the welding rod, as shown in Figure 16. The torch is held at an angle of approximately 30 degrees from the vertical away from the direction of welding, with the flame directed at the molten puddle. The welding rod is between the flame and the molten puddle. This position requires less transverse motion than is used in forehand welding.

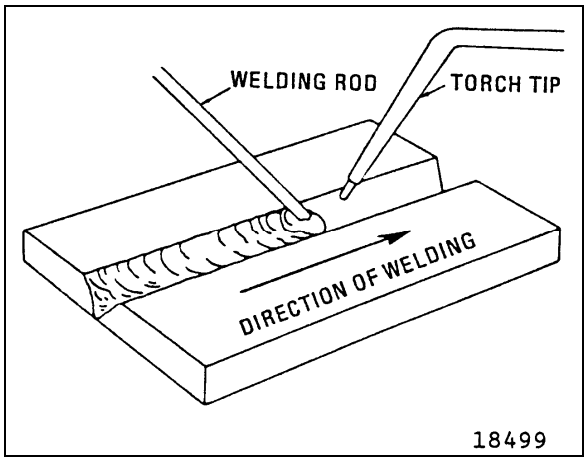

Figure 16. Backhand Welding

b. Backhand welding is used principally for welding heavy sections because it permits the use of narrower V's at the joint. A 60 degree included angle of bevel is sufficient for a good weld. In general there is less puddling, and less welding rod is used with this method than with the forehand method.

42. **MULTILAYER WELDING.**

a. In single layer welding of thick metal the side walls of the V could be melted excessively, which results in a wide weld. Multilayer welding (Figure 17) consists of depositing metal in two or more layers or passes. It is used in welding thick plates or pipe walls to avoid carrying a large puddle of molten metal, which is difficult to control.

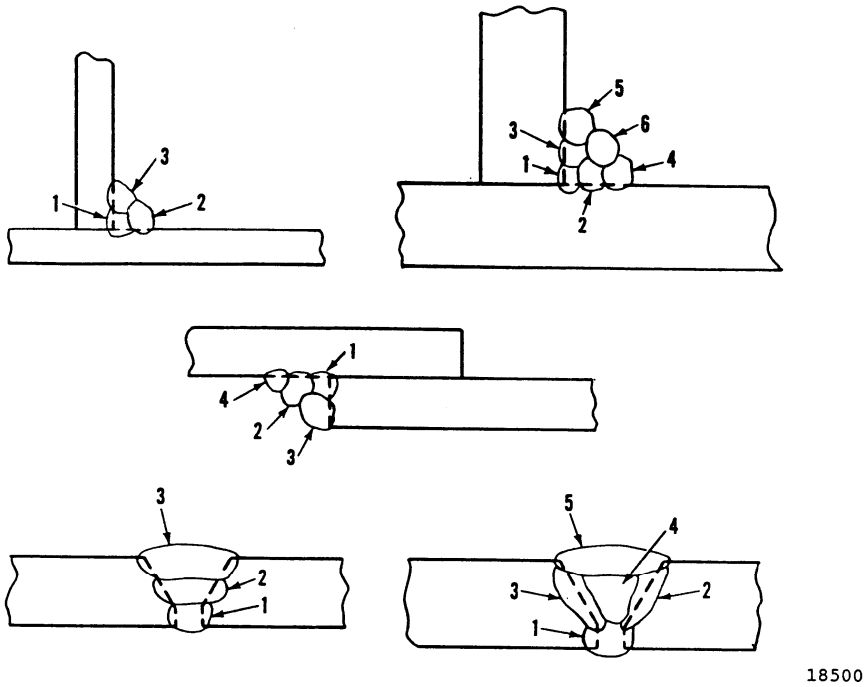

Figure 17. Sequences in Multilayer Welding

b. The multilayer method allows the welder to concentrate on getting good penetration at the root of the V in the first pass or layer. The final layer is easily controlled to obtain a good smooth surface.

c. This method permits the metal deposited in a given layer to be partly or wholly refined by the succeeding layers, and therefore improved in ductility. The lower layer of weld metal, after cooling to black heat, is reheated by the upper layer through the critical temperature range and then cooled, in effect being heat treated. In work where this added quality is desired in the top layer of the welded joint, an excess of weld metal is deposited on the finished weld and then machined off. The purpose of this last layer is simply to provide welding heat to refine the final layer of weld metal.

43. **FILLET WELDING.**

a. A different welding technique is required for fillet welding than for butt joints because of the position of the parts to be welded. When welding is done in the horizontal position, the lower plate is continuous under the weld, and there is a tendency for the top plate to melt before the bottom plate. This can be avoided, however, by pointing the flame more at the bottom plate than at the edge of the upper plate. Both plates must reach the welding temperature at the same time.

b. In making the weld, a modified form of backhand technique should be used. The welding rod should be kept in the puddle between the completed portion of the weld and the flame, but the flame should be pointed ahead slightly in the direction in which the weld is being made and directed at the lower plate. To start welding, the flame should be concentrated on the lower plate until the metal is quite red and then should be directed so as to bring both plates to the welding temperature at the same time. It is important that the flame not be pointed directly at the inner corner so that the burning gases are reflected back around the tip, since this makes for pocketing in the weld and control of the puddle is difficult.

c. It is essential in this form of welding that fusion be obtained at the inside corner or root of the joint.

44. **FLAT POSITION WELDING.**

a. In order to make satisfactory weld beads on a plate surface the flame motion, tip angle, and position of the welding flame above the molten puddle should be carefully maintained. The welding torch should be adjusted to give the proper type of flame for the particular metal being welded.

b. Narrow weld beads are made by raising and lowering the welding flame with a slight circular motion while progressing forward. The tip should form an angle of approximately 45 degrees with the plate surface, and the flame should point in the welding direction (Figures 18 and 19).

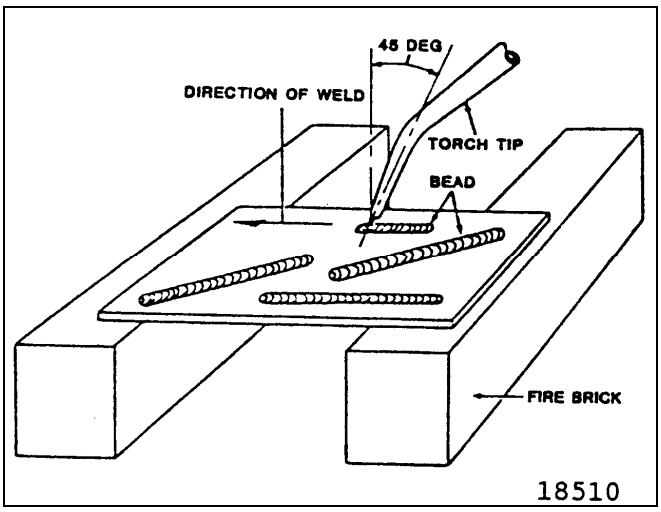

Figure 18. Welding Beads Without a Welding Rod

c. To increase the depth of fusion either increase the angle between the tip and the plate surface or decrease the welding speed. The size of the puddle should not be too large because this will cause the flame to burn through the plate. A properly made weld bead, without the addition of filler rod, will be slightly below the upper surface of the plate, and a ridge will form on the underside to indicate full penetration (Figure 18). A weld bead with filler rod shows a buildup on the surface of the plate.

d. A small puddle should be formed on the surface when making a weld bead with a welding rod (Figure 19). The welding rod is inserted into the puddle and then the base plate and rod are melted together. The torch should be moved slightly from side to side to obtain good fusion. By varying the speed of welding and the amount of metal deposited from the welding rod the size of the weld bead can be controlled to any desired limit.

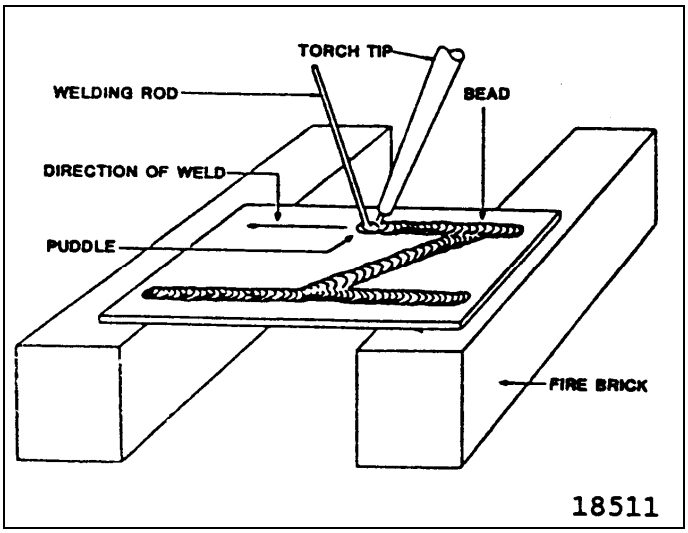

Figure 19. Welding Beads With a Welding Rod

45. **BUTT WELDS.**

a. Several types of joints are used to make butt welds in the flat position. These are illustrated in Figures 20 and 21.

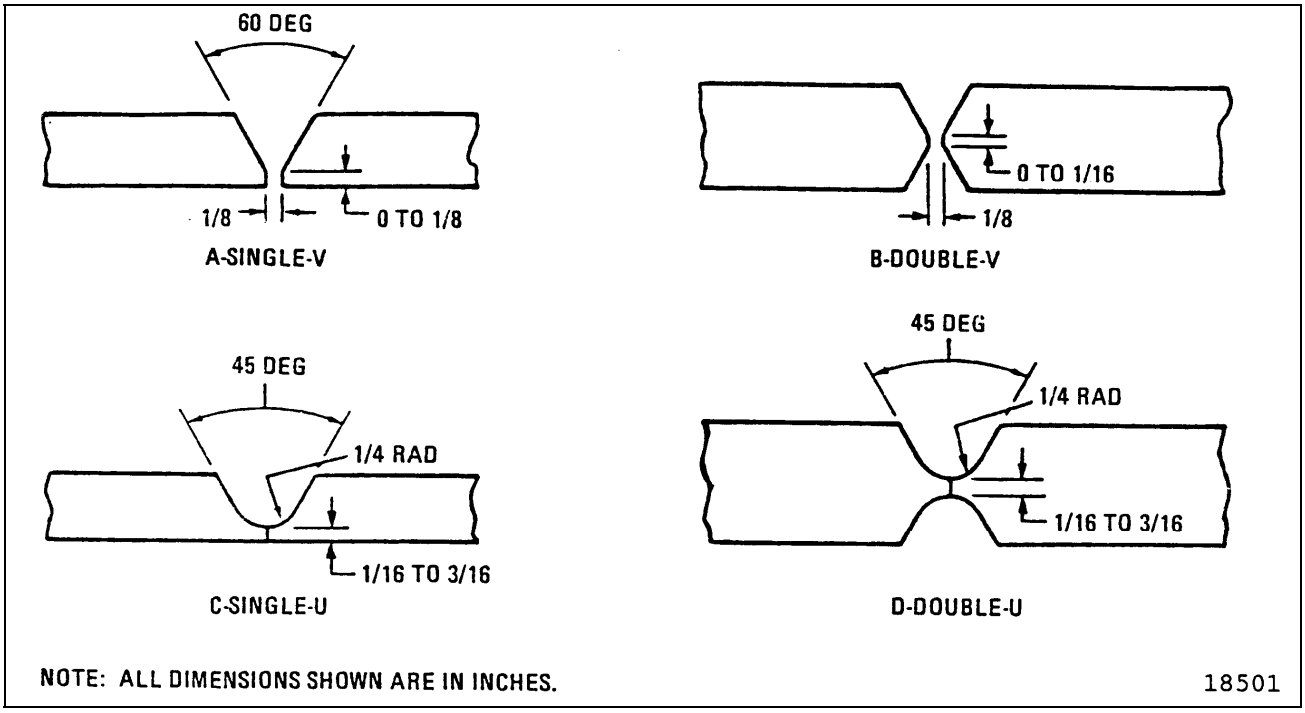

Figure 20. Butt Joints in Heavy Sections

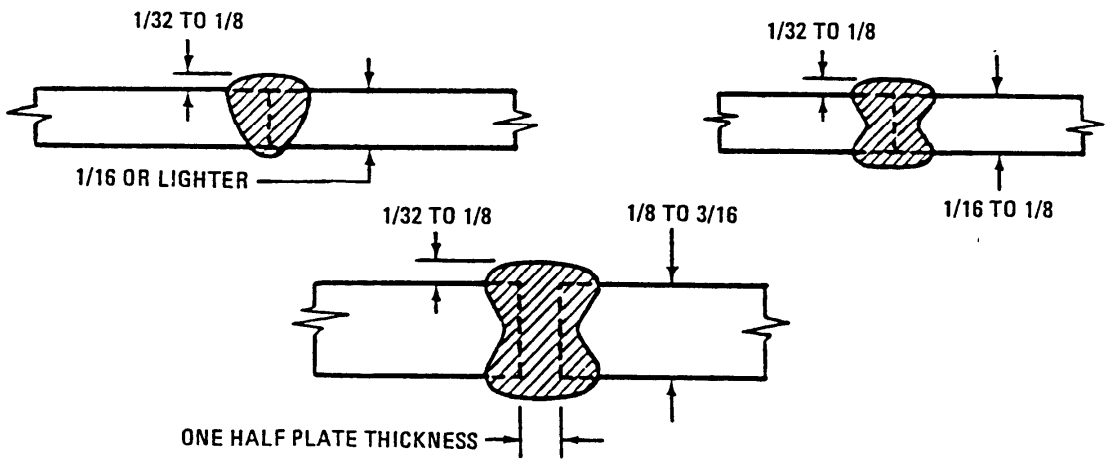

NOTE: ALL DIMENSIONS SHOWN ARE IN INCHES.

18502

Figure 21. Butt Joints in Light Sections

b. Tack welds should be used to keep the heavier plates aligned. The lighter sheets should be spaced to allow for weld metal contraction and thus prevent warpage.

c. The following guide should be used for selecting the number of passes (Figure 17) in butt welding steel plates:

Plate thickness, inch	Number of passes
1/8 to 1/4	1
1/4 to 5/8	2
5/8 to 7/8	3
7/8 to 1 1/8	4

d. The position of the welding rod and torch tip in making a flat position butt joint is shown in Figure 22. The motion of the flame should be controlled so as to melt the side walls of the plates and enough of the welding rod to produce a puddle of the desired size. By oscillating the torch tip and welding rod a molten puddle of a given size can be carried along the joint at a speed which will ensure both complete penetration and sufficient filler metal to provide some reinforcement at the weld.

e. Care should be taken not to overheat the molten puddle. This will result in “burning the metal”, porosity, and low strength in the completed weld.

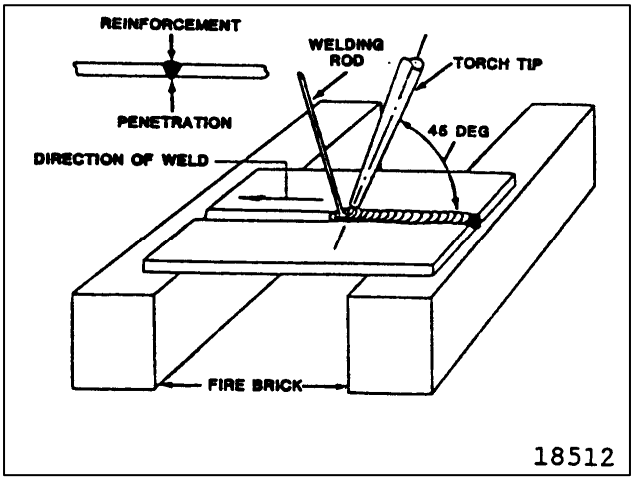

Figure 22. Position of Rod and Torch for a Butt Weld in a Flat Position

46. **HORIZONTAL POSITION WELDING.**

a. It is a little more difficult to master butt welding in the horizontal position than in the flat position. This is due to the tendency of molten metal to flow to the lower side of the joint, while the heat from the torch rises to the upper side of the joint. The combination of these opposing factors makes it difficult to apply a uniform deposit to this joint.

b. Align the plates and tack weld at both ends (Figure 23). The torch should move with a slight oscillation up and down to distribute the heat equally to both sides of the joint. A slight rolling motion should be applied to the rod. The torch movement and the movement of the rod are the same as before, a rolling motion up and down the width of the deposit, thereby holding the molten metal in a plastic state to prevent excessive flow of the metal to the lower side of the joint and permit faster solidification of the weld metal.

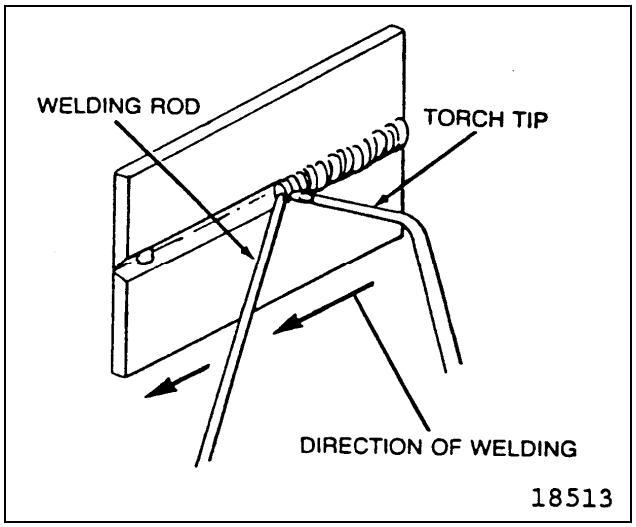

Figure 23. Welding a Butt Joint in the Horizontal Position

c. This joint in horizontal position will require considerably more practice than the previous techniques. It is, however, important that the technique be mastered before passing on to other types of weld joints.

47. **VERTICAL POSITION WELDING.**

a. When welding is done on a vertical surface the molten metal has a tendency to run downward and pile up. A weld that is not carefully made will result in a joint with excessive reinforcement at the lower end and some undercutting on the surface of the plates.

b. The flow of metal can be controlled by pointing the flame upward at an angle of 45 degrees to the plate, and holding the rod between the flame and the molten puddle (Figure 24). The flow of gases from the inclined tip keeps the metal from sagging or falling and insures good penetration and fusion at the joint. Both the torch and welding rod should be oscillated to deposit a uniform bead. The welding rod should be held slightly above the center line of the joint, and the welding flame should sweep the molten metal across the joint to distribute it evenly.

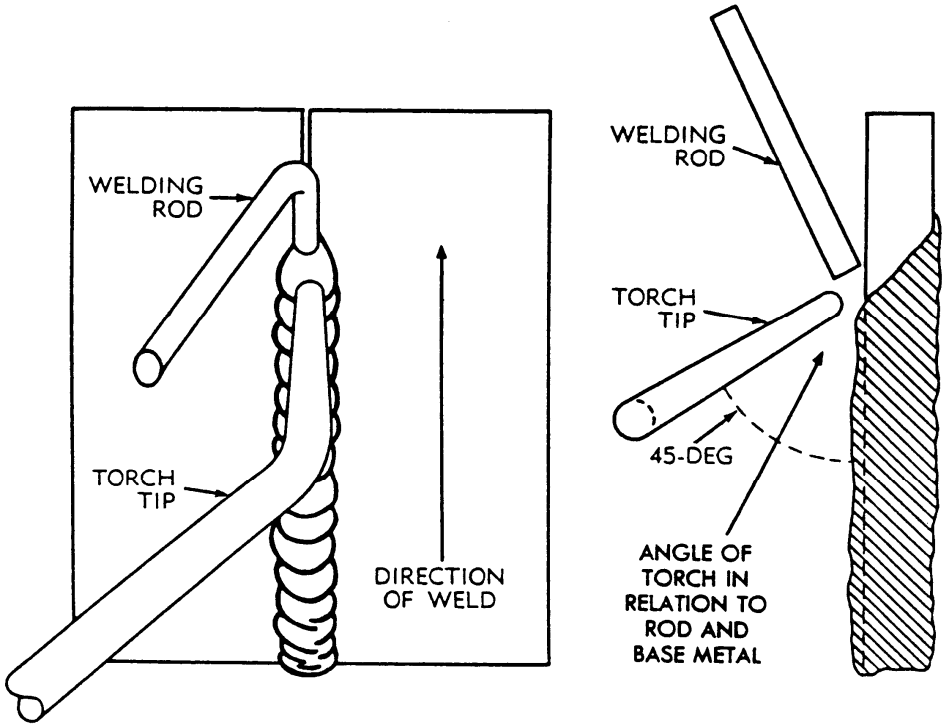

18514

Figure 24. Welding a Butt Joint in the Vertical Position

c. Butt joints welded in the vertical position should be prepared for welding in the same manner as that required for welding in the flat position (**FLAT POSITION WELDING**).

48. **OVERHEAD POSITION WELDING.**

a. In overhead welding the metal deposited tends to drop or sag on the plate causing the bead to have a high crown. To overcome this difficulty the molten puddle should be kept small and enough filler metal should be added to obtain good fusion with some reinforcement at the bead. If the puddle becomes too large the flame should be removed for an instant to permit the weld metal to freeze. When welding light sheets the puddle size can be controlled by applying the heat equally to the base metal and filler rod.

b. The torch and welding rod position for welding overhead butt joints are shown in Figure 25. The flame should be directed so as to melt both edges of the joint, and sufficient filler metal should be added to maintain an adequate puddle with sufficient reinforcement. The welding flame should support the molten metal and distribute it along the joint. Only a small puddle is required so a small welding rod should be used. Care should be taken to control the heat to avoid burning through the plates. This is particularly important when welding is done from one side only.

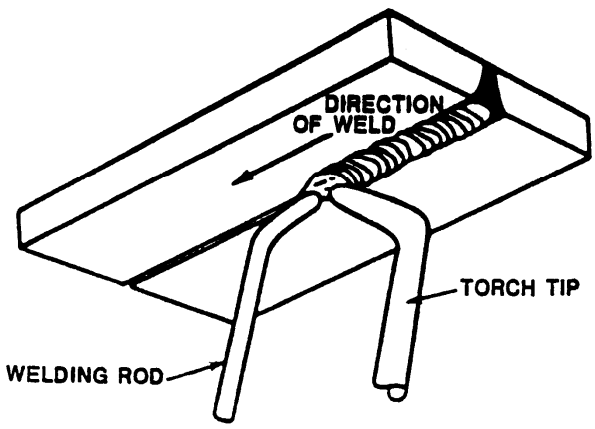

18515

Figure 25. Welding a Butt Joint in the Overhead Position

c. The pool of the molten metal should progress evenly down the seam as the weld is being made.

d. The inner cone tip of the flame should not be permitted to come in contact with the welding rod, molten puddle, or base metal. The flame should be manipulated so that the molten metal is protected from the atmosphere by the envelope or outer flame.

e. The end of the welding rod should be melted by placing it in the puddle under the protection of the enveloping flame. The rod should not be melted above the puddle and allowed to drip into it.

f. Do not overheat the molten metal because this will cause the metal to boil and spark excessively. The resultant grain structure of the weld metal will be large, the strength will be lowered, and the weld will be badly scaled.

g. Low carbon steels do not harden in the fusion zone as a result of welding heat.

49. **BRAZING AND CUTTING METALS**

50. **GENERAL BRAZING.**

a. Brazing is a group of welding processes in which the filler metal is a nonferrous metal or alloy with a melting point above 800°F(427°C), but lower than that of the metals to be joined. The filler metal is distributed between the closely fitted surfaces of the joint by capillary attraction.

b. In brazing, a nonferrous filler rod, strip, or wire is used for repairing or joining cast iron, malleable iron, wrought iron, steel, copper, nickel, and high melting point brasses and bronzes. Some of these brasses and bronzes, however, melt at a temperature so near to that of the filler rod that fusion welding rather than brazing is required.

c. In brazing with the oxyacetylene torch the base metal parts are heated to the temperatures required for the melting and free flowing of the brazing alloy. Care should be taken not to overheat the base metal. One method for determining the correct temperature is to touch the joint with the filler rod, strip, or wire as the heating progresses. As soon as the temperature of the metal is high enough to melt the alloy, the rod, strip, or wire is brought under the flame to perform the operation.

d. Repairs on high carbon and tool steels should be made by brazing only in cases of an emergency, and where the lower strength and hardness of the filler metal are acceptable. Brazing should never be used where the part is subjected to temperatures higher than 630°F(343°C).

51. **SILVER BRAZING.**

a. Silver brazing, frequently called ”silver soldering,” is a low temperature brazing process with rods having melting points ranging from 1,145°F to 1,650°F (618°C to 899°C). This is considerably lower than that of the copper alloy brazing filler metals. The strength of a joint made by this process is dependent on a thin film of silver brazing filler metal.

b. Silver brazing filler metals are composed of silver with varying percentages of copper, nickel, tin, and zinc. They are used for joining all ferrous and nonferrous metals except aluminum, magnesium, and other metals which have too low a melting point.

c. It is essential that the joints be free of oxides, scale, grease, dirt, or other foreign matter. Surfaces other than cadmium plating can be easily cleaned mechanically by wire brushing, or an abrasive cloth; chemically by acid pickling or other means. Extreme care must be used in grinding all cadmium surfaces to the base metals since cadmium oxide fumes formed by heating and melting of silver brazing alloys are highly toxic.

d. Silver braze flux is generally required. The melting point of the flux must be lower than the melting point of the silver brazing filler metal so that it will clean the base metal and properly flux the molten metal. A satisfactory flux should be applied by means of a brush to the parts to be joined and also to the silver brazing filler metal rod.

e. When silver brazing by the oxyacetylene process, a strongly reducing flame is desirable. The outer envelope of the flame, not the inner cone, should be applied to the work. The cone of the flame is too hot for this purpose. Joint clearances should be between 0.002 and 0.005 inch for best filler metal distribution. A thin film of filler metal in a joint is stronger and more effective, and a fillet build up around the joint will increase its strength. Some joints which can be used are shown in Figure 26.

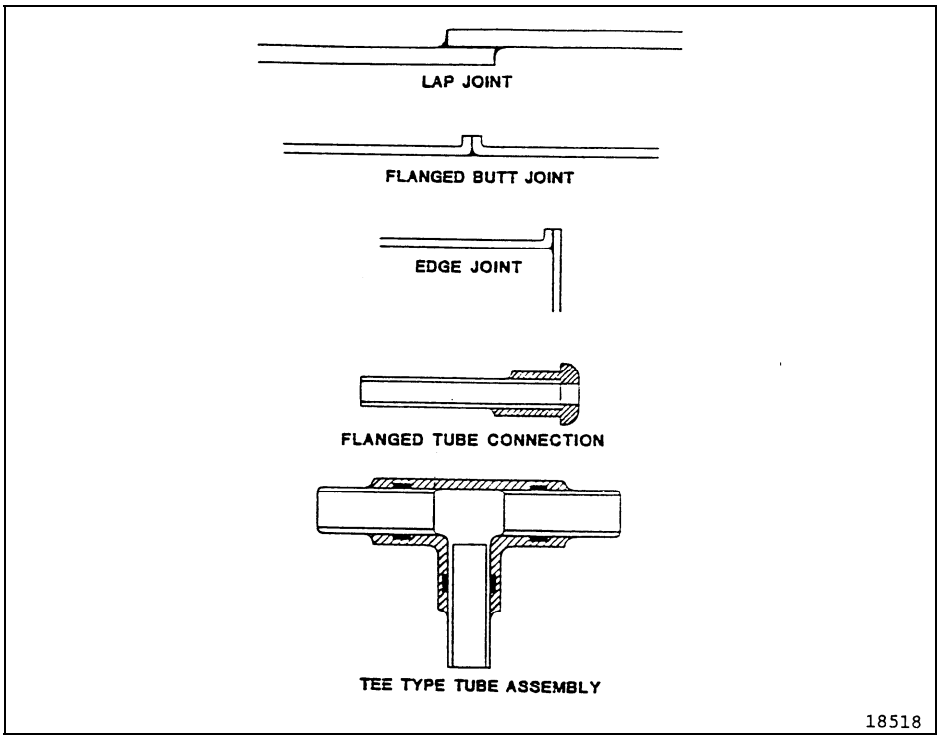

Figure 26. Silver Brazing Joints

f. The base metal should be heated until the flux starts to melt along the line of the joint; the filler metal is not subjected to the flame but is applied to the heated area of the base metal just long enough to flow the filler metal completely into the joint. If one of the parts to be joined is heavier than the other, the heavier part should receive the most heat. Also, parts having high heat conductivity should receive more heat

52. **CUTTING WITH OXYACETYLENE FLAME.**

a. If iron or steel is heated to its kindling temperature (not less than 1,600°F (871°C)), and then brought into contact with oxygen it burns or oxidizes very rapidly. The reaction of oxygen with the iron or steel forms iron oxide ($Fe_3 0_4$) and gives off considerable heat. This heat is sufficient to melt the oxide and some of the base metal; consequently, more of the metal is exposed to the oxygen stream. This reaction of oxygen and iron is used in the oxyacetylene cutting process. A stream of oxygen is firmly fixed onto the metal surface after it has been heated to the kindling temperature. The hot metal reacts with oxygen, generating more heat and melting. The molten metal and oxide are swept away by the rapidly moving stream of oxygen. The oxidation reaction continues and furnishes heat for melting another layer of metal. The cut progresses in this manner. The principle of the cutting process is shown in Figure 27.

b. Theoretically, the heat created by the burning iron would be sufficient to heat adjacent iron red hot, so that once started the cut could be continued indefinitely with oxygen only, as is done with the oxygen lance. In practice, however, excessive heat absorption at the surface caused by dirt, scale, or other substances, makes it necessary to keep the preheating flames of the torch burning throughout the operation.

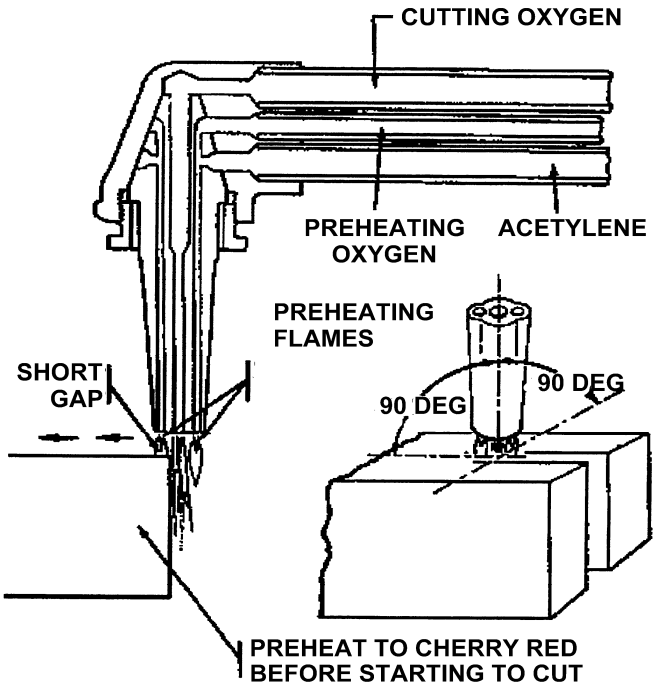

Figure 27. Starting a Cut and Cutting with a Cutting Torch

53. **CUTTING STEEL AND CAST IRON.**

a. Plain carbon steels with a carbon content not exceeding 0.25 percent can be cut without special precautions other than those required to obtain cuts of good quality. Certain steel alloys develop high resistance to the action of the cutting oxygen, making it difficult and sometimes impossible to propagate the cut without the use of special techniques.

54. **SCARFING, GOUGING AND HOGGING.**

a. This portion includes those processes where oxygen and an oxyacetylene flame are used in removing the surfaces of metals. Several of these processes are described below.

(1) Scarfing or Deseaming. This process is used for the removal of cracks, scale, and other defects from the surface of blooms, billets, and other unfinished shapes in steel mills. In this process, a spot or area on the surface of the metal is heated to the ignition temperature, then a jet or jets of oxygen are impinged on the preheated area and advanced as the surface is cut away. The scarfed surface is comparable to that of steel cleaned by chipping.

(2) Gouging. This process is used for the removal of welds. It is also used in the elimination of defects such as cracks, sand inclusions, and porosity from steel castings.

(3) Hogging. This is a flame machining process used for the removal of excess metals such as risers and sprues from castings. It is a combination of scarfing and gouging techniques.

ORGANIZATIONAL, INTERMEDIATE AND DEPOT MAINTENANCE

RESISTANCE WELDING AND EQUIPMENT

Reference Material

Specification for Resistance Welding for Aerospace Applications..... AWS D17.2

Alphabetical Index

Subject **Page No.**

Resistance Welding Equipment 2
Projection Welding 4
Seam Welding 5
Spot Welding 2
Upset and Flash Welding 5
Welding Operations 5
Welding Specifications 6

Record of Applicable Technical Directives

None

1. **RESISTANCE WELDING EQUIPMENT.**

a. Resistance welding is a type of welding process in which the workpieces are heated by the passage of an electric current through the area of contact. Such processes include spot, seam, projection, upset and flash welding.

b. The standard types of equipment used for resistance welding are composed of these principal elements:

(1) An electrical circuit with a transformer and current regulator, with a secondary circuit to conduct the welding current to the electrodes.

(2) The mechanical equipment for holding the work and applying the required pressure.

(3) The control and timing devices.

2. **SPOT WELDING.**

a. This is a resistance welding process wherein coalescence is produced by the heat obtained from resistance to the flow of electric current through the workpieces, which are held together under pressure by electrodes. The size and shape of the individually formed welds are limited primarily by the size and contour of the electrodes. Spot welding is particularly adaptable to thin sheet metal construction and has many applications in this type of work. The spot welding principle is illustrated in Figure 1.

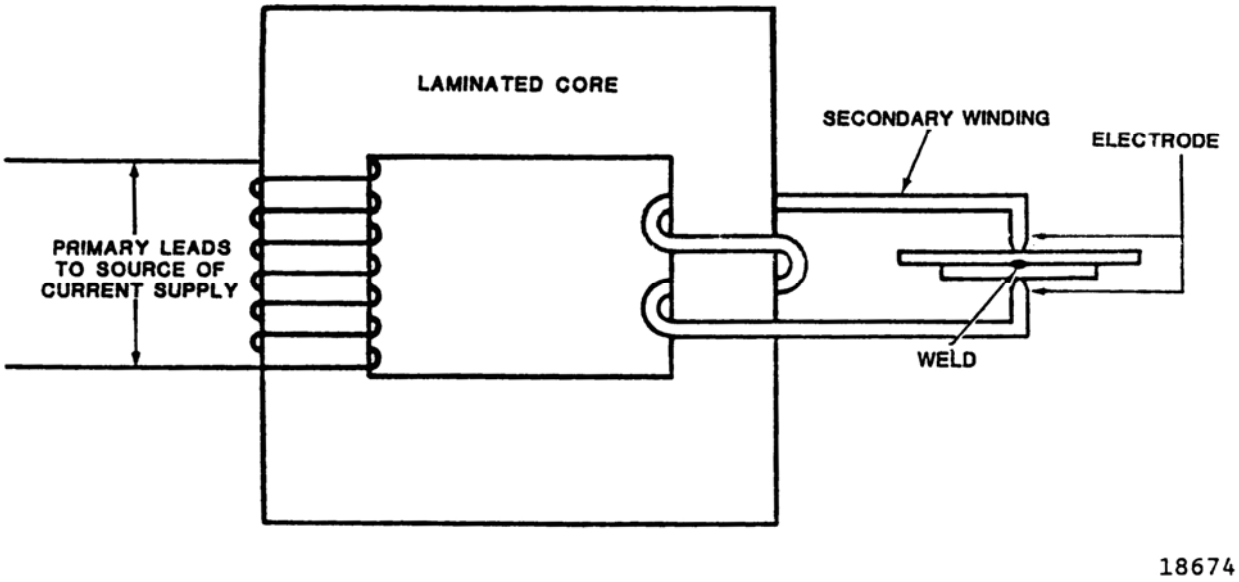

Figure 1. Schematic Diagram of Resistance Spot Welder

b. A spot welding machine with its essential operating elements for manual operation is shown in Figure 2. In this machine the electrode jaws are extended in such a manner as to permit a weld to be made at a considerable distance from the edge of the base metal sheet. The electrodes are composed of a copper alloy, which are assembled in such a manner that considerable force or squeeze may be applied to the metal during the welding process.

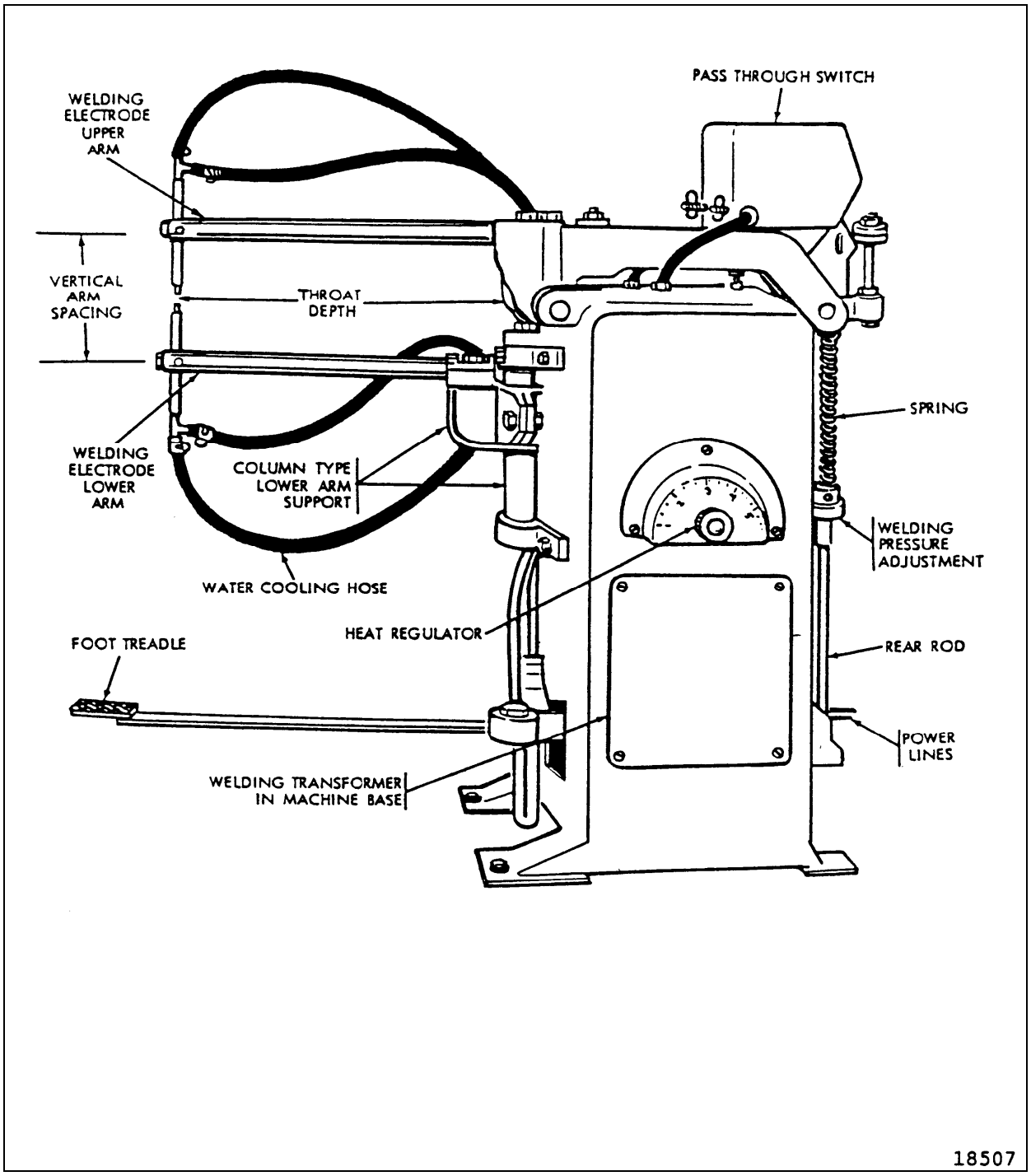

Figure 2. Resistance Spot Welding Machine and Accessories

c. In aluminum spot welding conventional machines may be used, however the best results are obtained only if certain refinements are incorporated into these machines. Some of these desirable features are:

- ability to handle high current for short weld times; precise electronic control of current and length of time it is applied
- rapid follow up of the electrode force by use of anti-friction bearings and lightweight low inertia heads
- high structural rigidity of the welding machine arms, holders, and platens to minimize deflection under the high electrode forces used for aluminum, and to reduce magnetic deflections
- a variable or dual force cycle to permit forging the weld nugget; slope control to permit a gradual build-up and tapering off of the welding current
- postheat current to allow slower cooling of the weld nugget
- good cooling of the Class 1 electrodes to prevent tip pickup or sticking. Refrigerated cooling is often helpful

3. **PROJECTION WELDING.**

a. This is a process wherein coalescence is produced by the heat obtained from resistance to the flow of electric current through the workpieces, which are held together under pressure by electrodes. The resulting welds are localized at predetermined points by the design of the parts to be welded. This localization is usually accomplished by projections, embossments, or intersections. A method of localization is illustrated in Figure 3. This process is commonly used in the assembly of punched, formed, and stamped parts.

b. The projection welding dies or electrodes have flat surfaces with larger contacting areas than spot welding electrodes. The effectiveness of this type of welding depends on the uniformity of the projections or embossments on the base metal with which the electrodes are in contact (Figure 3).

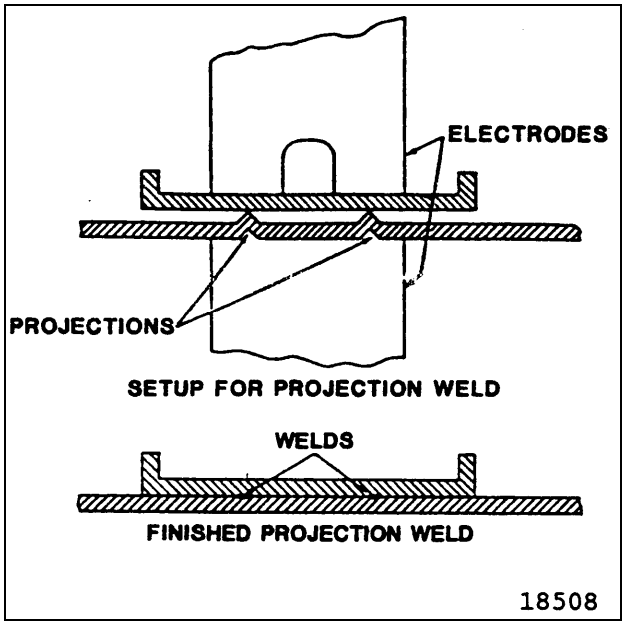

Figure 3. Projection Welding

4. **UPSET AND FLASH WELDING.**

a. This is a resistance welding process wherein coalescence is produced simultaneously over the entire area of abutting surfaces or progressively along a joint by the heat obtained from resistance to the flow of electric current through the area of contact of these surfaces. Pressure is applied before heating is started and is maintained throughout the heating period. Upsetting is accompanied by expulsion of metal from the joint (Figure 4).

b. Both of these processes can be performed on the same type of machine. The metals that are to be joined serve as electrodes.

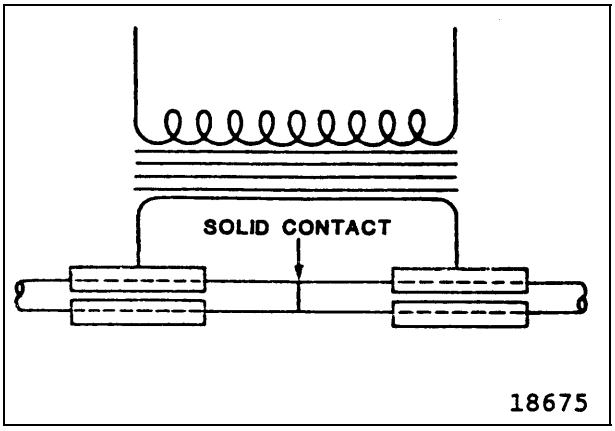

Figure 4. Projection Welding

5. **SEAM WELDING.**

a. **Roll Spot Welding**. This is a resistance welding process wherein separate spot welds are made without retracting the electrodes. This is accomplished by means of circular electrodes which are in continuous contact with the work.

b. **Seam Welding**. This is a resistance welding process wherein coalescence is produced by the heat obtained from resistance to the flow of electric current through the workpieces, which are held together under pressure by rotating circular electrodes. The resulting weld is a series of overlapping spot welds made progressively along a joint. Lapped and flanged joints in cans, buckets, tanks, mufflers, etc., are commonly welded by this process.

c. Several types of machines are used for seam welding, the type used depending on the service requirements. In some machines the work is held in a fixed position and a wheel type electrode is passed over it.

d. Portable seam welding machines use this principle. In the traveling fixture type seam welding machine the electrode is stationary and the work is moved.

6. **WELDING OPERATIONS.**

a. The operation of spot, seam, and projection welding involves the use of electric current of proper magnitude for the correct length of time. The current and time factors must be coordinated so that the base metal within a confined area will be raised to its melting point and then re-solidified under pressure. The temperature obtained must be sufficient to insure fusion of the base metal elements but not so high that metal will be forced from the weld zone when the pressure is applied.

b. In upset welding (Figure 4), the surfaces to be welded are brought into close contact under pressure and the welding heat is obtained from resistance to the flow of current through the area of contact of the abutting surfaces. When a sufficiently high temperature is obtained, welding of the surfaces is achieved by upsetting with the application of high pressure.

c. Non-destructive quality verification of serviceable resistance welds has proven difficult. As a result, the welding industry has often adopted pre-run, post-run and in-process (weld coupon or sample part) destructive evaluation for quality verification of production runs

7. **WELDING SPECIFICATIONS.**

a. Additional information concerning development of resistance welding parameters and equipment qualification are contained in American Welding Society (AWS) D17.2.

ORGANIZATIONAL, INTERMEDIATE AND DEPOT MAINTENANCE

GENERAL PRINCIPLES OF PLASMA ARC CUTTING

Reference Material

None

Alphabetical Index

Subject	Page No.
Cutting Operations	4
Plasma ARC Cutting (PAC)	2
General	2
Safety Cautions	2
Electric Shock Prevention	2
Eye Protection	2
Fire Prevention	3
Grounding	3
Noise Protection	3
Skin Protection	2
Toxic Fume Prevention	3

Record of Applicable Technical Directives

None

1. **PLASMA ARC CUTTING (PAC).**

2. **GENERAL.**

a. A plasma is a mixture of free electrons, positively charged ions and neutral atoms. The plasma is formed in the torch head by swirling a gas (often air in cutting operations) around a tungsten electrode in a small arc chamber. The gas is ionized to a plasma, expands and accelerates through a nozzle or orifice which constricts the flow to form a high energy jet of plasma. The jet heats the work piece by bombarding it with electrons and transferred energy from the high temperature gas. Cutting power depends upon intensity and velocity of the plasma which is controlled by gas composition, inlet pressure and the shape and size of the nozzle orifice. The process may be used for almost any metal which conducts electricity.

3. **SAFETY CAUTIONS.**

4. **EYE PROTECTION.**

a. Wear dark safety glasses or goggles, with the appropriate Lens Shade of Table 1 and with side shields or a welding helmet to protect eyes against plasma arc's Ultraviolet (UV) and Infrared (IR) rays.

Table 1. Arc Current and Lens Shade

ARC CURRENT	LENS SHADE (AWS #)
Up to 100 Amps.	No. 8
100 - 200 Amps.	No. 10
200 - 400 Amps.	No. 12
Over 400 Amps.	No. 14

b. Replace the glasses, goggles or helmet when the lens becomes pitted or broken.

c. Warn other people in the area not to look directly at the arc unless they are wearing glasses, goggles or a helmet.

d. Prepare the cutting area in a manner that reduces the reflection and transmission of UV light.

(1) Paint walls and other surfaces with dark colors to reduce reflection.

(2) Install protective screens or curtains to reduce UV transmission.

5. **SKIN PROTECTION.**

a. Wear protective clothing to protect against burns caused by UV, sparks or hot metal.

(1) Gauntlet gloves, safety shoes and hat.

(2) Flame-retardant clothing which covers all exposed areas.

(3) Cuffless trousers to prevent entry of sparks and slag.

6. **ELECTRIC SHOCK PREVENTION.**

a. Wear insulated gloves and boots and keep body and clothing dry.

b. Do not stand, sit, touch or lie on any wet surface when using the plasma system.

c. Inspect the primary power cord frequently for damage or cracking of the cover. Bare wiring can kill. Do not use a system with a damaged power cord. Replace a damaged power cord immediately.

d. Before removing a power supply cover for maintenance disconnect the main power at the wall disconnect switch or unplug the power supply. To avoid exposure to severe electrical hazard wait five minutes after disconnecting the main power to allow capacitors to discharge.

e. Inspect the torch lead. Replace if frayed or damaged.

f. Do not pick up the work piece, including the waste cutoff while cutting. Leave the work piece in place or on the workbench with the work cable attached during the cutting process.

g. Before changing the torch parts disconnect the main power or unplug the power supply. After changing torch parts and replacing the retaining cap, plug in the power supply again.

7. **GROUNDING.**

a. Be sure to connect the power cord ground wire to the ground in the disconnect box.

b. Tighten all electrical connections to avoid excessive heating.

c. Attach the work cable securely to the work piece or the work table by making good metal to metal contact as close as possible to the area to be cut. Do not connect it to the piece that will fall away when the cut is complete.

d. Connect the work table to a high-quality ground.

8. **NOISE PREVENTION.**

a. The plasma cutting process can generate high levels of noise. Always wear proper ear protection when cutting or gouging with the plasma system.

9. **TOXIC FUME PREVENTION.**

a. Keep the cutting area well ventilated.

b. Remove all chlorinated solvents from the cutting area before cutting. Certain chlorinated solvents decompose when exposed to UV radiation to form phosgene gas.

c. Wear proper breathing mask and use proper ventilation when cutting galvanized metal.

d. Do not cut containers that have had toxic materials inside. Clean containers that have held toxic materials thoroughly before cutting.

WARNING

Do not cut metal or painted metals containing zinc, lead, cadmium or beryllium unless the operator, or anyone else subjected to the fumes, wears respiratory equipment or an air supplied helmet.

10. **FIRE PREVENTION.**

a. Make fire extinguishers available in the cutting area.

b. Remove combustible material from the immediate cutting area to a distance of at least 35 ft.

c. Quench freshly cut metal or allow metal to cool before handling it or bringing it into contact with combustible materials.

d. Never use plasma system to cut containers with potentially flammable materials inside. Such containers must be thoroughly cleaned prior to cutting.

e. Ventilate potentially flammable atmospheres before cutting with a plasma system. When cutting with oxygen as the plasma gas, an exhaust ventilation system is required.

NOTE

Never operate the plasma system in an atmosphere which contains heavy concentrations of dust, flammable gas or combustible liquid vapors unless properly vented.

11. **CUTTING OPERATIONS.**

NOTE

If the Plasma Arc Cutting equipment manufacturer's information is not readily available or accessible, refer to Table 2 for suggested cutting amperages.

a. The plasma inverter produces DC output voltage and cutting occurs in a transferred arc mode. The circuit must be complete. Ensure good metal to metal contact of work clamp as close as possible to area to be cut.

b. Start at the edge of the work piece. (Refer to Figure 1).

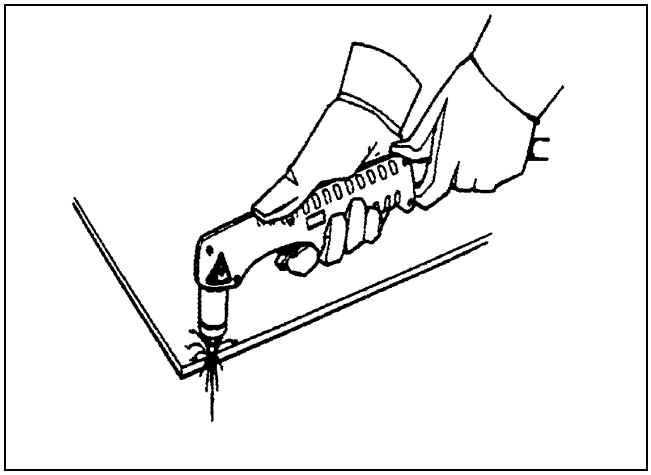

Figure 1. Starting a cut.

c. Sparks should come out of the bottom. If spraying on top, the torch is moving too fast, or there is not sufficient power to fully penetrate the work piece. (Refer to Figure 2 and Table 2.)

d. Hold the torch lightly on the metal or just off the metal. Holding the torch firmly to the work piece causes the shield or nozzle to stick and makes smooth cutting difficult. The arc transfers to the work piece once the torch is within 1/8 inch of the surface.

e. Pulling the torch through the cut is easier than pushing it although either method is acceptable.

f. Hold the torch nozzle at a vertical position and watch the arc as it cuts along the line. By lightly dragging the shield or nozzle on the work piece, it is possible to maintain a steady cut. (Refer to Figure 2).

g. When cutting thin material reduce amperage until the best quality cut is obtained. If the Plasma Arc Cutting equipment manufacturer's information is not readily available or accessible, refer to Table 2 for suggested cutting amperages.

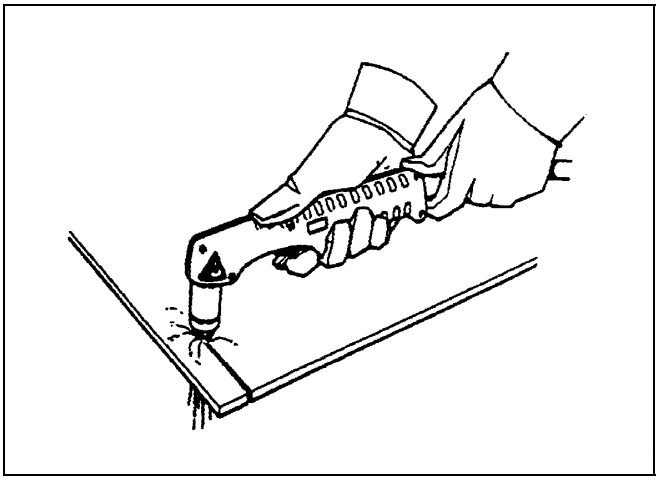

Figure 2. Dragging the Torch

Table 2. Cutting Amperages

Material Thickness	(mm)	Material	Arc Current (A)	Arc Voltage (V)	Recommended Travel Speed* (ipm)	(mm/min)	Pierce Delay (S)
24 ga	0.6	Mild Steel	20	113	200	5080	-
20 ga.	0.8	Mild Steel	20	114	144	3660	-
18 ga.	1.2	Mild Steel	20	115	86	2180	-
16 ga.	1.5	Mild Steel	20	116	46	1170	-
16 ga.	1.5	Mild Steel	30	109	110	2790	-
14 ga.	2	Mild Steel	30	110	65	1650	-
12 ga.	2.7	Mild Steel	30	112	45	1140	-
10 ga.	3.4	Mild Steel	30	116	28	710	0.5
3/16”	4.8	Mild Steel	30	123	23	580	1.0
1/4”	6.4	Mild Steel	30	126	18	460	2.0
1/32”	.8	Aluminum	30	105	260	6600	-
1/16”	1.5	Aluminum	40	105	200	5080	-
3/32”	2.4	Aluminum	40	105	192	4880	-

* Recommended travel speeds are 10-20% slower than maximum. These slower speeds will produce optimum cut quality.

THIS PAGE INTENTIONALLY LEFT BLANK

ORGANIZATIONAL, INTERMEDIATE AND DEPOT MAINTENANCE

GENERAL WELDING CERTIFICATION REQUIREMENTS

Reference Material

Specification for Fusion Welding for Aerospace Applications ..... AWS D17.1
Specification for Resistance Welding for Aerospace Applications ..... AWS D17.2
Standard Welding Terms and Definitions Including Terms for Adhesive Bonding, Brazing, Soldering, Thermal Cutting, and Thermal Spraying ..... AWS A3.0

Alphabetical Index

Subject **Page No.**

Certification Materials and Procedures 25
GMAW and SMAW 28
GTAW 25
Sheet 25
Tubes 25
Welding Fixtures 28
Definitions 2
Detailed Brazing Certification Requirements 28
Detailed Weld Certification Requirements 13
Welding Base Metals 24
Welding Procedures 22
General 2
General Certification Requirements for Military and Civilian Welders at the Intermediate Level 9
Certification Procedures 9
Failure to Meet Certification Requirements 10
Recertification Procedure 10
Welder Certification Procedures not Contained in this Section 9
Machine Welding Certification Requirements 29
Certification Procedure for Electron Beam Welding Machine Operators 29
Certification Procedure for Laser Beam Welding Machine Operators 29
Certification Procedure for Resistance Welding Machine Operators 29
Responsibilities 3
Scope 2
Visual Acuity Requirements 3
Welding Position Requirements 3

Record of Applicable Technical Directives

None

NOTE

This entire Work Package Series contains **MANDATORY** information. Deviations are not permitted unless authorized by competent or cognizant authorities.

1. **SCOPE.**

a. This Work Package describes general welding certification requirements; provide qualified welding procedures for a range of ferrous and non-ferrous alloys commonly used on aircraft and missile weapon systems and support equipment.

b. This Work Package gives methods and procedures for primarily the Gas tungsten Arc Welding (GTAW) process. Gas Metal Arc Welding (GMAW), Shielded Metal Arc Welding (SMAW) and Torch Brazing (TB) are required for repair of aircraft support equipment and are included in this certification section.

c. Machine operator certifications, such as Electron Beam (EB), Laser Beam Welding (LBW), and Resistance Welding (RW) are provided for *guidance and information* only. Specific operator certification process shall be determined by each Military Service and is beyond the scope of this general technical series manual.

d. If methods and procedures for other welding certifications are required, obtain the methods and procedures by complying with the instructions in section **WELDER CERTIFICATION PROCEDURES NOT CONTAINED IN THIS SECTION**.

NOTE

Refer to the following specific service Work Packages 005 01 (Navy), 005 02 (Air Force), or 005 03 (Army) for additional requirements.

2. **DEFINITIONS.**

a. The welding terms used in this manual are shall be interpreted per AWS A3.0, Standard Welding Terms, and Definitions, published by the American Welding Society. Some of the terms are defined in the Glossary of Terms in this manual. For further definitions and illustrations, refer to Work Package 003 or AWS A3.0.

3. **GENERAL.**

a. This work package describes the standards and procedures to certify military aircraft and missile welders. The military qualification requirements are derived from the minimum requirements from the commercial aviation welding specification, American Welding Society, D17.1.

b. DoD aviation welders may be required to certify in the following processes:

- **GAS TUNGSTEN ARC WELDING (GTAW)**
- **GAS METAL ARC WELDING (GMAW)**
- **SHIELDED METAL ARC WELDING (SMAW)**
- **TORCH BRAZING (TB)**
- **RESISTANCE WELDING (RW)**

c. A qualified welder or torch brazer, must be trained, tested, and certified under this section and the guidance of AWS D17.1 (GTAW, SMAW and GMAW), AWS C3.4 (Torch Brazing), and AWS D17.2 (RW).

d. Work Package 005 04 provides visual, metallographic, and radiographic tests required to examine completed test welds, including acceptance and rejection criteria.

e. Where there is a conflict between NA 01-1A-34 and the commercial welding or brazing specifications, the NA-01-1A-34 takes precedence.

4. **RESPONSIBILITIES.**

CAUTION

Each military service is responsible to ensure that only personnel fully trained and certified by this work package are permitted to weld on aircraft, missile, weapons systems, and support equipment.

a. Each military service will determine which welding process and metal groups are required for welder certification.

b. Personnel evaluating test welds are not required to be a qualified welder.

c. Military Units that are unable to perform the required test may send either the welder or the completed test welds to their geographic Air Logistics Centers (WP 005 02), Naval Aviation Welding School (WP005 01) or Army Aviation Welding Certification Center (WP 005 03).

d. Major commands and units are responsible for funding the certification of welders.

5. **VISUAL ACUITY REQUIREMENTS.**

a. Welders shall have vision acuity of 20/30 or better in either eye and shall be able to read a Jaeger No. 2 Eye Chart at a distance of 16 inches. Natural or corrected vision may be used to achieve eye test requirements.

b. Vision acuity testing should be checked annually and not to exceed two years maximum.

6. **WELDING POSITION REQUIREMENTS.**

NOTE

Refer to the following specific service Work Packages 005 01 (Navy), 005 02 (Air Force), or 005 03 (Army) for welding position requirements.

a. A welder or welding operator, upon successful completion of a sanctioned welding training school, will be capable of welding sheet or tube, out-of position, as defined by AWS D17.1.

b. GTAW PROCESS. Certification can be accomplished by welding sheets in the 2G, 3G, and 3F position or welding tubes in the 6G position depending on specific service requirements. Refer to Figure 1 and Table 1 for clarification.

c. GMAW AND SMAW PROCESSES. Plate positions 1G and 2F are the minimum required for GMAW and SMAW certifications depending on service specific requirements. Refer to Figure 1 and Table 1 for clarification.

Table 1. Welding Position, Base Metal Form, and Weld Type Qualified by Test Weld (Per AWS D17.1)[3]

			QUALIFIED POSITION															
TEST WELD			SHEET								TUBE							
FORM	WELD TYPE	POSITION	Groove				Fillet [1]				Groove[2]				Fillet [1]			
			1G	2G	3G	4G	1F	2F	3F	4F	1G	2G	3G	4G	1F	2F	3F	4F
Sheet	Groove	1G	X				X	X			X				X			
		2G	X	X			X	X			X	X			X			
		3G	X			X	X	X	X		X				X			
		4G	X			X	X	X		X	X				X			
Sheet	Fillet	1F					X								X			
		2F					X	X							X	X		
		3F					X	X	X						X			
		4F					X	X		X					X	X	X	
Tube	Groove	1G	X				X	X			X				X	X		
		2G	X	X			X	X			X	X			X	X		
		5G	X		X	X	X		X	X	X		X		X		X	X
		6G	X	X	X	X	X	X	X	X	X	X	X	X	X	X	X	X
Tube	Fillet	1F					X								X			
		2F					X	X							X	X		
		4F					X	X		X					X	X	X	
		5F					X	X	X	X					X	X	X	X

Notes:
(1) A groove test weld does not qualify for fillet welds in base metal equal to or less than 0.063 inch in thickness.
(2) A sheet test weld qualifies for tube welds 1 inch in OD or greater.
(3) Welding position, base metal form, and base metal qualified by test weld. Use of heat sinks or backing is optional. However, qualification using heat sinks or backing does not qualify for welding without heat sinks or backing.

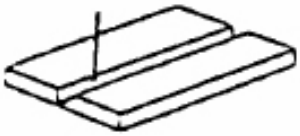

1G

Flat position. The welding position used to weld from the upper side of the joint; the face of the weld is approximately horizontal.

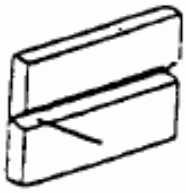

2G

Horizontal position. The position of welding in which the axis of the weld lies in an approximately horizontal plane and the face of the weld lies in an approximately vertical plane.

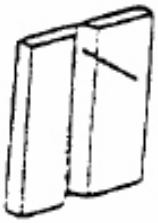

3G

Vertical position. The position of welding in which the axis of the weld is approximately vertical.

4G

Overhead position. The position in which welding is performed from the underside of the joint.

Groove weld in sheet: positions 1G, 2G, 3G and 4G.

Figure 1. Weld Positions (From Table 1) (Sheet 1 of 4)

1F

Flat position. The welding position used to weld from the upper side of the joint; the face of the weld is approximately horizontal.

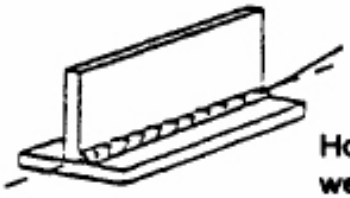

2F

Horizontal position. The position in which welding is performed on the upper side of an approximately horizontal surface and against an approximately vertical surface.

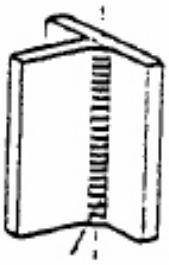

3F

Vertical position. The position of welding in which the axis of the weld is approximately vertical.

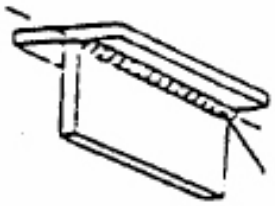

4F

Overhead position. The position in which welding is performed from the underside of the joint.

Fillet weld in sheet: positions 1F, 2F, 3F and 4F.

Figure 1. Weld Positions (From Table 1) (Sheet 2)

Horizontal rolled position. The position of a pipe joint in which the axis of the pipe is approximately horizontal, and welding is performed in the flat position by rotating the pipe.

1G

Vertical position. The position of a pipe joint in which welding is performed in the horizontal position and the pipe is not rotated during welding.

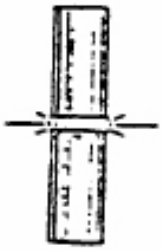

2G

Horizontal fixed position. The position of a pipe joint in which the axis of the pipe is approximately horizontal and the pipe is not rotated during welding.

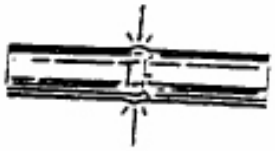

5G

Inclined position. The position of a pipe joint in which the axis of the pipe is approximately at an angle of 45° to the horizontal and the pipe is not rotated during welding.

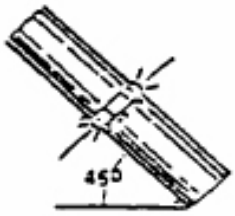

6G

Groove weld in tube: positions 1G, 2G, 5G and 6G.

Figure 1. Weld Positions (From Table 1) (Sheet 3)

Flat position. The welding position used to weld from the upper side of the joint; the face of the weld is approximately horizontal and the pipe is rotated during welding.

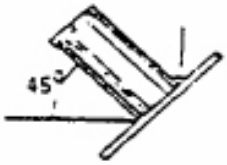

1F

Horizontal position. The position in which welding is performed on the upper side of an approximately horizontal surface and against an approximately vertical surface and the pipe is not rotated during welding.

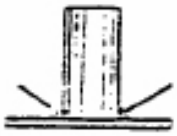

2F

Overhead position. The position in which welding is performed from the underside of the joint and the pipe is not rotated during welding.

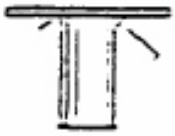

4F

Multiple position. The position in which the axis of the pipe is approximately horizontal and the pipe is not rotated during welding.

5F

Fillet weld in tube; positions 1F, 2F, 4F and 5F.

Figure 1. Weld Positions (From Table 1) (Sheet 4)

7. **GENERAL CERTIFICATION REQUIREMENTS FOR MILITARY AND CIVILIAN WELDERS AT THE INTERMEDIATE LEVEL.**

NOTE

Army/Army civilian welders or welding operators at the Intermediate Level shall re-qualify every three years to the same requirements as an original qualification.

NOTE

Civilian welders at depot activities shall re-qualify every five (5) years.

a. To maintain certification, all military and civilian welders at the Intermediate Level must weld every three months in any given welding process. ***This process does not apply to Depot Level welders***.

8. **WELDER CERTIFICATION PROCEDURES NOT CONTAINED IN THIS SECTION.**

a. For unique welding processes and/or base material combinations that are not contained herein, contact your local support depot regarding specific requirements for certification.

9. **CERTIFICATION PROCEDURES.**

NOTE

Any conflicts between NA 01-1A-34 and commercial welding or brazing specifications, such as, AWS D17.1 this manual will take precedence.

a. Welders shall be certified for each metal group listed in Table 2 of this section, in which they are to perform welding and/or torch brazing. Select the appropriate Work Packages for certification based on service specific requirements.

Table 2 - Base Metals

GROUP	NOMINAL DESCRIPTION	ALLOY	WPS NO.
I	Carbon and Low Alloy Steel	1010/1020 4130	1, 8, 10-13, 27-29, 54
II	Stainless Steels	321 347	2, 14, 15, 30-32, 40, 47
III	Nickel Base Alloys	IN718 Inconel 600	3, 16, 17, 33-35, 41, 44-46, 50
IV	Aluminum Base Alloys	6061 (Any temper is acceptable)	4, 18-20, 36-38, 43, 52
V	Magnesium Base Alloys	AZ92, AZ31B	5, 22, 23, 48
VI	Titanium Base Alloys	Ti-6Al-4V Ti-3Al-2.5V	6, 24, 25, 49, 53
VII	Cobalt Base Alloys	L605/HS188	7, 26, 39, 42, 51

NOTE

Test specimens for GTAW shall be a maximum length of 8 inches and a minimum length of 4 inches. Test specimens for GMAW and SMAW shall be 6 inches long and a combined width of 4 inches in the as-welded condition.

Refer to WORK PACKAGE 005 02 for unique Air Force requirements.

b. Test specimen materials for certification/recertification shall be prepared and furnished by the organization responsible for observing the welding certification process. The welder identified on the specimen shall weld the specimen in the welder's normal duty shop. The shop supervisor or maintenance officer shall assure that each specimen is welded by the welder identified on the specimen, and returned to the welding instructor at one of the examination facilities listed in Work Packages 005 01 (Navy), 005 02 (Air Force), or 005 03 (Army) for service specific requirements.

c. Welders whose specimens fail to meet minimum requirements shall have one (1) additional requalification examination. The recertification examination requires a double set of specimens and recording documents identified as recertification examination. Should the results of either specimen of a recertification examination be unsatisfactory, the operator shall require further training. Welders who fail the recertification examination will not perform any production welding operations until recertification is successfully achieved.

d. Weld specimens that are visually satisfactory to the welding instructor/shop supervisor or maintenance officer shall be forwarded together with the Welding Examination Record (WER) (Figure 2), to the appropriate welding examination and evaluation facility for final examination/test. Refer to Work Packages 005 01 (Navy), 005 02 (Air Force), or 005 03 (Army) for location of evaluation facilities.

e. Each Welding Examination Record (see Figure 2) indicating acceptable weld specimens, assigned by evaluating lab and the welding inspector/instructor, shall be forwarded to the service training coordinator for processing and issuing of Welding Certification Card (see Figure 3).

f. The certifying facility shall maintain records of training, certification/recertification of all qualified welders for the duration of their use for a period not less than two (2) years.

10. **FAILURE TO MEET CERTIFICATION REQUIREMENTS.**

a. A welder who fails to meet the certification requirements for one or more of the required test welds contained in this section may be retested as described in **CERTIFICATION PROCEDURES.**

11. **RECERTIFICATION PROCEDURE.**

NOTE

Refer to the following Work Packages 005 01 (Navy), 005 02 (Air Force), or 005 03 (Army) for specific service welding position requirements.

a. WELDERS. A welder shall be recertified to the same requirements as the original certification. It shall be the responsibility of the service commands to determine the interval of recertification. It is recommended that intermittent or part time welders recertify more frequently than full time welders. Recertification is required when:

WELDING EXAMINATION RECORD			1. DATE
SECTION I - APPLICATION			
2. NAME *(Last, First, Middle Initial)*		3. PARENT ORGANIZATION	4. UNIT ADDRESS
5. QUALIFICATION GROUP	6. RATING/RATE	7. WELDER IDENTIFICATION NUMBER	8. EXPIRATION DATE
9. WELDING SCHOOL OR SOURCE OF TRAINING		10. WELDING PROCESS	

11. WELDING PROCEDURE SPECIFICATIONS *(See Table 3-3 for all parameters. Use a. - n. for special qualifications)*	WPS NUMBERS								
a. BASE METAL									
b. FILLER METAL TYPE									
c. FILLER METAL DIAMETER									
d. POSITION									
e. TORCH SHIELDING GAS TYPE									
f. TORCH SHIELDING GAS FLOW									
g. ROOT SHIELDING GAS TYPE									
h. ROOT SHIELDING GAS FLOW									
i. NOZZLE SIZE									
j. CURRENT TYPE									
k. AMPERAGE									
l. ELECTRODE TYPE									
m. ELECTRODE DIAMETER									
n. NUMBER OF PASSES									

12. SIGNATURE OF APPLICANT	13. SIGNATURE OF OBSERVING OFFICIAL. I certify the weld specimen was completed by the applicant using the above procedure.

SECTION II - EXAMINATION RESULTS

WPS NUMBERS	TEST SPECIMEN				RETEST SPECIMEN			
	14. VISUAL	15. RADIOGRAPHIC	16. BEND	17. METALLOGRAPHIC	14. VISUAL	15. RADIOGRAPHIC	16. BEND	17. METALLOGRAPHIC

18. REMARKS

19. TO OBTAIN REQUALIFICATION OPERATOR MUST:

☐ RESUBMIT EXAMINATION ☐ ATTEND AUTHORIZED WELDING TRAINING SCHOOL

20. TESTING OFFICIAL ☐ QUALIFIED ☐ NOT QUALIFIED	a. SIGNATURE	
b. ORGANIZATION AND ADDRESS	c. QUALIFICATION GROUP	d. LEVEL *(AF only)*
21a. SIGNATURE OF CERTIFYING OFFICIAL		b. DATE CERTIFIED

DD FORM 2757, JUN 1997

Figure 2. Welding Examination Record DoD Form 2757 (Sheet 1 of 2)

INSTRUCTIONS FOR COMPLETION OF DD FORM 2757.
WELDING EXAMINATION RECORD

SECTION I:

Block 2 - NAME. Self-explanatory.

Block 3 - PARENT ORGANIZATION. Self-explanatory.

Block 4 - UNIT ADDRESS. Self-explanatory.

Block 5 - QUALIFICATION GROUP. Metal groups submitted for certification.

Block 6 - RATING/RATE. Enter military rank or civilian pay number.

Block 7 - WELDER IDENTIFICATION NUMBER. Enter military identification number or civilian pay number.

Block 9 - WELDING SCHOOL OR SOURCE OF TRAINING. Self-explanatory.

Block 10 - WELDING PROCESS. Process used to accomplish the weld.

Block 11 - WELDING PROCEDURE USED. Conditions used in completing test welds will be listed under appropriate WPS number column (See Table 3-3).

Block 12 - SIGNATURE OF APPLICANT. Self-explanatory.

Block 13 - SIGNATURE OF OBSERVING OFFICIAL. Signature of the person observing the certification welding.

Blocks 14 - 17. The appropriate blocks will be marked either satisfactory (SAT) or unsatisfactory (UNSAT) in accordance with the results of the particular examination.

Block 18 - REMARKS. Record cause of any unsatisfactory results or other relevant information.

Block 19 - TO OBTAIN REQUALIFICATION OPERATOR MUST. Decision made by evaluating activity after failure of previous test specimens.

Block 20 - TESTING OFFICIAL. Annotate whether qualified or not qualified in appropriate box (All DOD). Signature of the official who evaluates the test specimens. Organization and address of testing official.

Block 21 - CERTIFYING OFFICIAL. The welding instructor/inspector who actually certifies the welder at the evaluation laboratory will enter signature and record the effective date of

DD FORM 2757 (BACK), JUN 1997

Figure 2. Welding Examination Record DoD Form 2757 (Sheet 2)

WELDING CERTIFICATION CARD

NAME _____ WELDER IDENTIFICATION NO. _____

is certified in accordance with NA 01-1A-34/TO 00-25-252/TC 9-238/ AWS B2.1 for the welding processes, metal groups, thicknesses and positions that are listed and initialed/stamped on the back of this card.

DATE _____ AUTHORIZED ENG. LAB SIGNATURE _____

DATE _____ WELD INSTRUCTOR/INSPECTOR SIGNATURE _____

CERTIFYING ACTIVITY _____

DD FORM 2758, JUN 1997

PROCESS	METAL GROUP	THICKNESS LIMITATIONS	POSITIONS	INITIAL/ STAMP	EXP. DATE

DD FORM 2758 (BACK), JUN 1997

Figure 3. Welding Certification Card DoD Form 2758

(1) A welder has not welded with a given welding process for a period of 90 days; except that this period shall be extended to 180 days if the welder has welded with another welding process (i.e. GMAW, SMAW, etc.).

(2) There is specific reason to question the ability of the welder or welding operator to meet the requirements for certification in a given welding process. Specific reasons may include poor quality welds, eyesight acuity, health, and behavior.

(3) The welder fails retesting as described in **CERTIFICATION PROCEDURES**.

b. **BRAZERS**. Renewal of certification of a brazing performance specification is required when:

(1) Three or five years, depending of military service, has passed from the date of last certification or recertification. Refer to specific service work packages for recertification intervals.

(2) A brazer has not used the brazing process for a period of six (6) months or more.

(3) When there is a specific reason to question the ability to make brazes that meet this specification.

12. **DETAILED WELD CERTIFICATION REQUIREMENTS.**

a. GENERAL. For welders and welding operators, a test weld made with a given welding process as listed in **GENERAL** is qualified only with that welding process. These procedures do not apply to welding processes not included in that list.

NOTE

Each military service will determine the metal groups for which the welders are certified.

b. GTAW. Successful welding of WPS #1 through #7 and #11 through #54, as required by service requirements (refer to Table 3, this WP).

c. GMAW. Successful welding of WPS #8. (refer to Table 3, this WP)

d. SMAW. Successful welding of the joint described in WPS #10 (refer to Table 3, this WP).

e. EVALUATION. Visual and radiographic evaluation of the test weldment shall be in accordance with Work Package 005 04.

Table 3. Welding Procedure Specifications

	WPS No. 1	WPS No. 2	WPS No. 3	WPS No. 4	WPS No. 5	WPS No. 6	WPS No. 7	WPS No. 8
WELDING PROCESS	GTAW	GTAW	GTAW	GTAW	GTAW	GTAW	GTAW	GMAW
BASE METAL	Low Alloy Steel 4130	Stainless Steel 347	Nickel Alloy IN718	Aluminum Alloy 6061-T6	Magnesium Alloy AZ31B	Titanium Alloy 3Al-2.5V	Cobalt Allot L605	Mild Steel 1010-1020
THICKNESS	0.050	0.050	0.050	0.050	0.050	0.050	0.050	0.250
JOINT DESCRIPTION	Tube Butt Joint	Tube Butt Joint	Tube Butt Joint	Tube Butt Joint	Tube Butt Joint	Tube Butt Joint	Tube Butt Joint	Sheet Butt Joint
WELD TYPE	Single Square Groove 1 Pass	Single Square Groove 1 Pass	Single Square Groove 1 Pass	Single Square Groove 1 Pass	Single Square Groove 1 Pass	Single Square Groove 1 Pass	Single Square Groove 1 Pass	Single V-Groove Multiple Passes
JOINT CLEARANCE	None	None	None	None	None	None	None	None
BACKING	None	None	None	None	None	None	None	None
WELD POSITION	6G - 45° Tube	6G - 45° Tube	6G - 45° Tube	6G - 45° Tube	6G - 45° Tube	6G - 45° Tube	6G - 45° Tube	1G (Flat)
WELD PROGRESSION	Forehand	Forehand	Forehand	Forehand	Forehand	Forehand	Forehand	Forehand
FILLER METAL	4130	347	IN718	5356	AWS ER AZ92A AMS 4395	AWS Ti 3Al-2.5V AMS 4943	AMS 5795	AWS E70S-6
DIAMETER	0.045	0.045	0.045	0.045	0.045	0.045	0.045	0.035
SHIELDING GAS	Argon 20 CFH	Argon 20 CFH	Argon 20 CFH	Argon 20 CFH	Argon 20 CFH	Argon 20 CFH	Argon 20 CFH	CO_2 30 psi
NOZZLE SIZE	#7	#7	#7	#7	#7	#7	#12	N/A
ROOT SHIELDING GAS	Argon 10 CFH	Argon 10 CFH	Argon 10 CFH	Argon 10 CFH	Argon 10 CFH	Argon 10 CFH	Argon 10 CFH	None
CURRENT (AMPS)	DCEN 0-46	DCEN 0-35	DCEN 0-39	AC-HF 0-40	AC-HF 0-38	DCEN 0-38	DCEN 0-38	DCEN 26V
ELECTRODE/SIZE	AWS EWCe-2 EWLa-1 0.063	AWS EWCe-2 EWLa-1 0.063	AWS EWCe-2 EWLa-1 0.063	AWS EWCe-2 EWLa-1 0.063	AWS EWCe-2 EWLa-1 0.063	AWS EWCe-2 EWLa-1 0.063	AWS EWCe-2 EWLa-1 0.063	0.035
REMARKS	Note #1, #3	Note #1, #3	Note #1, #3	Note #1, #3	Note #1, #3	Note #1, #3	Note #1, #3	Note #2, #3

Note #1: Incline position. The position of a tube joint in which the axis of the tube is approximately at an angle of 45° to the horizontal, and the tube is not rotated during welding.
Note #2: Joint prepared by machining edges, grinding and degreasing.
Note #3: Post weld heat treatment not required.

Table 3. Welding Procedure Specifications (Cont.)

	WPS No. 9	WPS No. 10	WPS No. 11	WPS No. 12	WPS No. 13	WPS No. 14	WPS No. 15	WPS No. 16
WELDING PROCESS	BRAZE	SMAW	GTAW	GTAW	GTAW	GTAW	GTAW	GTAW
BASE METAL	SS-St-Brass	MILD STEEL 1010-1020	4130	4130	4130	321 SS	321 SS	IN718
THICKNESS	See Fig 4 & 5	0.250	0.032	0.125	0.125	0.020	0.032	0.125
JOINT DESCRIPTION	See Fig 4 & 5	SHEET BUTT JOINT	SHEET BUTT JOINT	SHEET BUTT JOINT	SHEET T-JOINT	SHEET BUTT JOINT	SHEET BUTT JOINT	SHEET BUTT JOINT
WELD TYPE	Lap	SINGLE V-GROOVE MULTI-PASS	SINGLE SQUARE GROOVE, 1 PASS	SINGLE V-GROOVE 2 PASS	FILLET 1 SIDE Max Leg 3/16” 1 PASS	SINGLE SQUARE GROOVE, 1 PASS	SINGLE SQUARE GROOVE, 1 PASS	SINGLE SQUARE GROOVE, 1 PASS
JOINT CLEARANCE	None	NONE	NONE	0.62 MAX.	0.62 MAX.	NONE	NONE	0.62 MAX.
BACKING	None	PERMITTED	NONE	NONE	NONE	NONE	NONE	NONE
WELD POSITION	Vertical	1G	1G	1G	2F	1G	1G	1G
WELD PROGRESSION	N/A	Forehand	Forehand	Forehand	Forehand	Forehand	Forehand	Forehand
FILLER METAL	AWS A5.8 BAg-5 BAg-7	ER 7018 ER 6011	4130	4130	4130	347	347	AMS 5832
DIAMETER	0.035	3/32”	0.045	0.062	0.062	0.030	0.045	0.063
SHIELDING GAS	N/A	NONE	ARGON 20 CFH	ARGON 25 CFH	ARGON 20 CFH	ARGON 15 CFH	ARGON 15 CFH	ARGON 20 CFH
NOZZLE SIZE	N/A	N/A	#6	#6	#6	#6	#6	#6
ROOT SHIELDING GAS	N/A	N/A	ARGON 10 CFH	ARGON 10 CFH	ARGON 10 CFH	ARGON 10 CFH	ARGON 10 CFH	ARGON 10 CFH
CURRENT (AMPS)	N/A	DCEP 80-100	DCEN 0-30	DCEN 0-80	DCEN 0-69	DCEN 0-18	DCEN 0-32	DCEN 0-70
ELECTRODE & SIZE	N/A	ROOT – 6011 or 7018 COVER-7018 3/32”	AWS EWCe-2 EWLa-1 0.063	AWS EWCe-2 EWLa-1 0.063	AWS EWCe-2 EWLa-1 0.063	AWS EWCe-2 EWLa-1 0.063	AWS EWCe-2 EWLa-1 0.063	AWS EWCe-2 EWLa-1 0.063
REMARKS	Note #2, #3	Note #2, #3	Note #3	Note #3	Note #3	Note #3	Note #3	Note #3

Note #1: Incline position. The position of a tube joint in which the axis of the tube is approximately at an angle of 45° to the horizontal, and the tube is not rotated during welding.
Note #2: Joint prepared by machining edges, grinding and degreasing.
Note #3: Post weld heat treatment not required.

Table 3. Welding Procedure Specifications (Cont.)

	WPS No. 17	WPS No. 18	WPS No. 19	WPS No. 20	WPS No. 21	WPS No. 22	WPS No. 23	WPS No. 24
WELDING PROCESS	GTAW	GTAW	GTAW	GTAW	GTAW	GTAW	GTAW	GTAW
BASE METAL	IN718	6061-T6	6061-T6	6061-T6	AZ92A	AZ92A	AZ92A	Ti-6Al-4V
THICKNESS	0.040	0.032	0.125	0.020	0.032	0.125	0.020	0.040
JOINT DESCRIPTION	SHEET BUTT JOINT	SHEET BUTT JOINT	SHEET BUTT JOINT	SHEET BUTT JOINT	SHEET BUTT JOINT	SHEET BUTT JOINT	SHEET T-JOINT	SHEET BUTT JOINT
WELD TYPE	SINGLE SQUARE GROOVE, 1 PASS	SINGLE SQUARE GROOVE, 1 PASS	SINGLE V-GROOVE 2-PASS	SINGLE V-GROOVE 2 PASS	SINGLE SQUARE GROOVE 1 PASS	SINGLE SQUARE GROOVE 1 PASS	SINGLE SQUARE GROOVE 1 PASS	SINGLE SQUARE GROOVE 1 PASS
JOINT CLEANANCE	NONE	NONE	0.092	NONE	NONE	0.092	NONE	NONE
BACKING	NONE	NONE	NONE	NONE	NONE	NONE	NONE	NONE
WELD POSITION	1G	1G	1G	1G	1G	1G	1G	1G
WELD PROGRESSION	Forehand	Forehand	Forehand	Forehand	Forehand	Forehand	Forehand	Forehand
FILLER METAL	AMS 5832	4043	4043	4043	AMS 4395	AMS 4395	AMS 4395	AMS 4954
DIAMETER	0.045	0.062	0.125	0.045	0.045	0.125	0.045	0.045
SHIELDING GAS	ARGON 20 CFH	ARGON 25 CFH	ARGON 20 CFH	ARGON 20 CFH	ARGON 20 CFH	ARGON 20 CFH	ARGON 20 CFH	ARGON 30 CFH
NOZZLE SIZE	#6	#6	#7	#6	#6	#6	#12	#12
ROOT SHIELDING GAS	ARGON 10 CFH	ARGON 10 CFH	ARGON 10 CFH	ARGON 10 CFH	ARGON 10 CFH	ARGON 10 CFH	ARGON 10 CFH	ARGON 10 CFH
CURRENT (AMPS)	DCEN 0-33	AC-HF 0-35	AC-HF 0-125	AC-HF 0-28	AC-HF 0-28	AC-HF 0-65	AC-HF 0-13	DCEN 0-39
ELECTRODE/SIZE	AWS EWCe-2 EWLa-1 0.063	AWS EWCe-2 EWLa-1 EWZr-1 0.063	AWS EWCe-2 EWLa-1 EWZr-1 0.063	AWS EWCe-2 EWLa-1 EWZr-1 0.063	AWS EWCe-2 EWLa-1 EWZr-1 0.063	AWS EWCe-2 EWLa-1 EWZr-1 0.063	AWS EWCe-2 EWLa-1 EWZr-1 0.063	AWS EWCe-2 EWLa-1 EWZr-1 0.063
REMARKS	Note #3	Note #3	Note #3	Note #3	Note #2, #3	Note #2, #3	Note #2, #3	Note #3

Note #1: Incline position. The position of a tube joint in which the axis of the tube is approximately at an angle of 45° to the horizontal, and the tube is not rotated during welding.
Note #2: Joint prepared by machining edges, grinding and degreasing.
Note #3: Post weld heat treatment not required.

Table 3. Welding Procedure Specifications (Cont.)

	WPS No. 25	WPS No. 26	WPS No. 27	WPS No. 28	WPS No. 29	WPS No. 30	WPS No. 31	WPS No. 32
WELDING PROCESS	GTAW	GTAW	GTAW	GTAW	GTAW	GTAW	GTAW	GTAW
BASE METAL	Ti-6Al-4V	L605	4130	4130	4130	321	321	321
THICKNESS	0.125	0.016	0.063	0.063	0.063	0.063	0.063	0.063
JOINT DESCRIPTION	SHEET T-JOINT	SHEET BUTT JOINT	SHEET BUTT JOINT	SHEET BUTT JOINT	SHEET T-JOINT	SHEET BUTT JOINT	SHEET BUTT JOINT	SHEET T-JOINT
WELD TYPE	SINGLE V-GROOVE 2 PASS	SINGLE SQUARE GROOVE 1 PASS	SINGLE SQUARE GROOVE 1 PASS	SINGLE SQUARE GROOVE 1 PASS	SINGLE SQUARE GROOVE 1 PASS	SINGLE SQUARE GROOVE 1 PASS	SINGLE SQUARE GROOVE 1 PASS	SINGLE SQUARE GROOVE 1 PASS
JOINT CLEARANCE	0.062 MAX.	NONE	NONE	NONE	NONE	NONE	NONE	NONE
BACKING	NONE	NONE	NONE	NONE	NONE	NONE	NONE	NONE
WELD POSITION	1G	1G	2G	3G	3F	2G	3G	3F
WELD PROGRESSION	Forehand	Forehand	Forehand	Forehand	Forehand	Forehand	Forehand	Forehand
FILLER METAL	AMS 4954	AMS 5796	502	502	502	347	347	347
DIAMETER	0.062	0.030	0.045	0.045	0.045	0.045	0.045	0.045
SHIELDING GAS	ARGON 40 CFH	ARGON 15 CFH	ARGON 16 CFH	ARGON 16 CFH	ARGON 16 CFH	ARGON 16 CFH	ARGON 16 CFH	ARGON 16 CFH
NOZZLE SIZE	MODIFIED CUP – 2" DIA.	#4	#7	# 7	# 7	# 7	# 7	# 7
ROOT SHIELDING GAS	ARGON 20 CFH	ARGON 10 CFH	ARGON 10 CFH	ARGON 10 CFH	ARGON 10 CFH	ARGON 10 CFH	ARGON 10 CFH	ARGON 10 CFH
CURRENT (AMPS)	DCEN 0-70	DCEN 0-23	DCEN 0-46	DCEN 0-38	DCEN 0-40	DCEN 0-39	DCEN 0-035	DCEN 0-38
ELECTRODE/SIZE	AWS EWCe-2 EWLa-1 EWZr-1 0.063	AWS EWCe-2 EWLa-1 EWZr-1 0.063	AWS EWCe-2 EWLa-1 EWZr-1 0.063	AWS EWCe-2 EWLa-1 EWZr-1 0.063	AWS EWCe-2 EWLa-1 EWZr-1 0.063	AWS EWCe-2 EWLa-1 EWZr-1 0.063	AWS EWCe-2 EWLa-1 EWZr-1 0.063	AWS EWCe-2 EWLa-1 EWZr-1 0.063
REMARKS	Note #3	Note #3	Note #3	Note #3	Note #3	Note #3	Note #3	Note #3

Note #1: Incline position. The position of a tube joint in which the axis of the tube is approximately at an angle of 45° to the horizontal, and the tube is not rotated during welding.
Note #2: Joint prepared by machining edges, grinding and degreasing.
Note #3: Post weld heat treatment not required.

Table 3. Welding Procedure Specifications (Cont.)

	WPS No. 33	WPS No. 34	WPS No. 35	WPS No. 36	WPS No. 37	WPS No. 38	WPS No. 39	WPS No. 40
WELDING PROCESS	GTAW	GTAW	GTAW	GTAW	GTAW	GTAW	GTAW	GTAW
BASE METAL	IN600	IN600	IN600	6061-T6	6061-T6	6061-T6	L-605	A286
THICKNESS	0.063	0.063	0.063	0.063	0.063	0.063	0.032	0.032
JOINT DESCRIPTION	SHEET BUTT JOINT	SHEET BUTT JOINT	SHEET T-JOINT	SHEET BUTT JOINT	SHEET BUTT JOINT	SHEET T JOINT	SHEET BUTT JOINT	SHEET BUTT JOINT
WELD TYPE	SINGLE SQUARE GROOVE 1 PASS	SINGLE SQUARE GROOVE 1 PASS	SINGLE SQUARE GROOVE 1 PASS	SINGLE SQUARE GROOVE 1 PASS	SINGLE SQUARE GROOVE 1 PASS	SINGLE SQUARE GROOVE 1 PASS	SINGLE SQUARE GROOVE 1 PASS	SINGLE SQUARE GROOVE 1 PASS
JOINT CLEARANCE	NONE	NONE	NONE	NONE	NONE	NONE	NONE	NONE
BACKING	NONE	NONE	NONE	NONE	NONE	NONE	NONE	NONE
WELD POSITION	2G	3G	3F	2G	3G	3F	1G	2F
WELD PROGRESSION	Forehand	Forehand	Forehand	Forehand	Forehand	Forehand	Forehand	Forehand
FILLER METAL	IN 62	IN 62	IN 62	4043	4043	4043	AMS 5769	AMS 5804
DIAMETER	0.045	0.045	0.045	0.063	0.063	0.063	0.045	0.045
SHIELDING GAS	ARGON 16 CFH	ARGON 16 CFH	ARGON 16 CFH	ARGON 20 CFH	ARGON 20 CFH	ARGON 20 CFH	ARGON 20 CFH	ARGON 20 CFH
NOZZLE SIZE	# 7	# 7	# 7	# 7	# 7	# 7	#6	#6
ROOT SHIELDING GAS	ARGON 10 CFH	ARGON 10 CFH	ARGON 10 CFH	ARGON 10 CFH	ARGON 10 CFH	ARGON 10 CFH	ARGON 10 CFH	ARGON 10 CFH
CURRENT (AMPS)	DCEN 0-39	DCEN 0-35	DCEN 0-40	AC-HF 0-15	AC-HF 0-35	AC-HF 0-40	DCEN 0-33	DCEN 0-33
ELECTRODE/SIZE	AWS EWCe-2 EWLa-1 EWZr-1 0.063	AWS EWCe-2 EWLa-1 EWZr-1 0.063	AWS EWCe-2 EWLa-1 EWZr-1 0.063	AWS EWP 0.063	AWS EWP 0.063	AWS EWP 0.063	AWS Ce-2 La-1.5 0.063	AWS Ce-2 La-1.5 0.063
REMARKS	Note #3	Note #3	Note #3	Note #3	Note #3	Note #3	Note #3	Note #3

Note #1: Incline position. The position of a tube joint in which the axis of the tube is approximately at an angle of 45° to the horizontal, and the tube is not rotated during welding.
Note #2: Joint prepared by machining edges, grinding and degreasing.
Note #3: Post weld heat treatment not required.

Table 3. Welding Procedure Specifications (Cont.)

	WPS No. 41	WPS No. 42	WPS No. 43	WPS No. 44	WPS No. 45	WPS No. 46	WPS No. 47	WPS No. 48
WELDING PROCESS	GTAW	GTAW	GTAW	GTAW	GTAW	GTAW	GTAW	GTAW
BASE METAL	Inco 718	L-605	6061-T6	17-7PH	Inco 718	Inco 718	A286	AZ31B
THICKNESS	0.032	0.032	0.035/0.032	0.035/0.032	0.035/0.032	0.032	0.032	0.032
JOINT DESCRIPTION	SHEET BUTT JOINT	SHEET BUTT JOINT	TUBE TO SHEET	TUBE TO SHEET	TUBE TO SHEET	SHEET BUTT JOINT	TUBE TO SHEET	SHEET BUTT JOINT
WELD TYPE	SINGLE SQUARE GROOVE 1 PASS	SINGLE SQUARE GROOVE 1 PASS	FILLET 1 PASS	FILLET 1 PASS	FILLET 1 PASS	SINGLE SQUARE GROOVE 1 PASS	FILLET 1 PASS	SINGLE SQUARE GROOVE 1 PASS
JOINT CLEARANCE	NONE	NONE	NONE	NONE	NONE	NONE	NONE	NONE
BACKING	NONE	NONE	NONE	NONE	NONE	NONE	NONE	NONE
WELD POSITION	2F	2F	5F	5F	5F	1G	1G	2F
WELD PROGRESSION	Forehand	Forehand	Uphill	Uphill	Uphill	Forehand	Forehand	Forehand
FILLER METAL	AMS 5832	AMS 5796	AMS 4190	AMS 5824	AMS 5832	AMS 5832	AMS 5804	AWS ER AZ61A
DIAMETER	0.045	0.045	0.045	0.045	0.045	0.045	0.063	0.045
SHIELDING GAS	ARGON 20 CFH	ARGON 20 CFH	ARGON 20 CFH	ARGON 20 CFH	ARGON 20 CFH	ARGON 20 CFH	ARGON 20 CFH	ARGON 20 CFH
NOZZLE SIZE	#6	#6	#6	#6	#6	# 6	# 6	#6
ROOT SHIELDING GAS	ARGON 10 CFH	ARGON 10 CFH	ARGON 10 CFH	ARGON 10 CFH	ARGON 10 CFH	ARGON 10 CFH	ARGON 10 CFH	ARGON 10 CFH
CURRENT (AMPS)	DCEN 0-33	DCEN 0-33	AC-HF 0-28	DCEN 0-33	DCEN 0-33	DCEN 0-28	DCEN 0-33	AC-HF 0-28
ELECTRODE/SIZE	AWS Ce-2 La-1.5 0.063	AWS Ce-2 La-1.5 0.063	AWS EWP 0.063	AWS Ce-2 La-1.5 0.063	AWS Ce-2 La-1.5 0.063	AWS Ce-2 La-1.5 0.063	AWS Ce-2 La-1.5 0.063	AWS Ce-2 La-1.5 0.063
REMARKS	Note #3	Note #3	Note #3	Note #3	Note #3	Note #3	Note #3	Note #3

Note #1: Incline position. The position of a tube joint in which the axis of the tube is approximately at an angle of 45° to the horizontal, and the tube is not rotated during welding.
Note #2: Joint prepared by machining edges, grinding and degreasing.
Note #3: Post weld heat treatment not required.

Table 3. Welding Procedure Specifications (Cont.)

	WPS No. 49	WPS No. 50	WPS No. 51	WPS No. 52	WPS No. 53	WPS No. 54	WPS No. 55
WELDING PROCESS	GTAW	GTAW	GTAW	GTAW	GTAW	GTAW	Braze
BASE METAL	6Al-4V	17-7 PH	L-605	6061	6Al-4V	4130	SS – SS
THICKNESS	0.032	0.050	0.035/0.032	0.032	0.032	0.035/0.032	0.035
JOINT DESCRIPTION	TUBE TO SHEET	TUBE BUTT JOINT	TUBE TO SHEET	SHEET BUTT JOINT	SHEET BUTT JOINT	SHEET BUTT JOINT	Pipe/Flange
WELD TYPE	FILLET 1 PASS	SINGLE SQUARE GROOVE 1 PASS	FILLET 1 PASS	SINGLE SQUARE GROOVE 1 PASS	SINGLE SQUARE GROOVE 1 PASS	SINGLE SQUARE GROOVE 1 PASS	LAP
JOINT CLEARANCE	NONE	NONE	NONE	NONE	NONE	NONE	0.001-0.004
BACKING	NONE	NONE	NONE	NONE	NONE	NONE	NONE
WELD POSITION	5F	6G	5F	2F	2F	2F	VERTICAL
WELD PROGRESSION	Uphill	Forehand	Uphill	Forehand	Forehand	Uphill	N/A
FILLER METAL	AMS 4954	AMS 5824	AMS 5796	AMS 4190	AMS 4954	AMS 6457	AMS 4772
DIAMETER	0.045	0.045	0.045	0.045	0.045	0.045	0.047
SHIELDING GAS	ARGON 30 CFH	ARGON 20 CFH	ARGON 20 CFH	ARGON 20 CFH	ARGON 30 CFH	ARGON 20 CFH	N/A
NOZZLE SIZE	#12 w/Lens	#7	#6	#6	#12 w/Lens	#7	#4 Tip
ROOT SHIELDING GAS	ARGON 10 CFH	ARGON 10 CFH	ARGON 10 CFH	ARGON 10 CFH	ARGON 10 CFH	ARGON 10 CFH	N/A
CURRENT (AMPS)	DCEN 0-33	DCEN 0-35	DCEN 0-33	AC-HF 0-28	DCEN 0-33	DCEN 0-35	N/A
ELECTRODE/SIZE	AWS Ce-2 La-1.5 0.063	AWS Ce-2 La-1.5 0.063	AWS Ce-2 La-1.5 0.063	AWS EWP 0.063	AWS Ce-2 La-1.5 0.063	AWS Ce-2 La-1.5 0.063	N/A
REMARKS	Note #3	Note #3	Note #3	Note #3	Note #3	Note #3	Note #3

Note #1: Incline position. The position of a tube joint in which the axis of the tube is approximately at an angle of 45° to the horizontal, and the tube is not rotated during welding.
Note #2: Joint prepared by machining edges, grinding and degreasing.
Note #3: Post weld heat treatment not required.

13. **WELDING PROCEDURES.**

a. General. This section describes the welding requirements and welding procedures. The conditions given in the welding procedures are of two types, nonessential and essential.

- Nonessential conditions may be changed as desired; provided good welding practice is followed.
- Essential conditions may not be changed or may be changed only within specified limits.
- The status of each welding condition of the welding procedure specification is given below.

(1) Welding Process. **No change permitted. Essential**.

(2) Base Metal Composition. The base metals specified in Work Package 003 should be used. **Essential**.

(3) Base Metal Thickness. **No change permitted. Essential**.

(4) Tube Diameter and Wall Thickness. **No change permitted. Essential**.

(5) Other Base Metal Dimensions. Larger dimensions may be substituted. Greater lengths and widths may be substituted. **Nonessential**.

(6) Joint Description. **No change permitted. Essential**.

(7) Weld Type. **No change permitted. Essential**.

(8) Joint Clearance. **Nonessential**.

(9) Backing. **No change permitted. Essential**.

(10) Weld Position. **No change permitted. Essential**.

(11) Welding Progression. **No change permitted. Essential.**

(12) Filler Metal Composition. **No change permitted. Essential**.

(13) Filler Metal Diameter. **Nonessential**.

(14) Shielding Gas. **No change permitted. Essential**.

(15) Root Shielding Gas. **No change permitted. Essential**.

(16) Nozzle Size. **Nonessential.**

(17) Current Type. **No change permitted. Essential** (with exception that inverter power supplies can be used instead of AC-HF to weld aluminum and magnesium)**.**

(18) Welding Amperage. **Nonessential.**

WARNING

Thoriated tungsten poses a health hazard and should not be used except when ***mandated*** by technical instructions. Otherwise, replace 1% or 2% Thoriated Tungsten with 1.5% Lanthanum Tungsten for current and future welding operations.

(19) Electrode. **Nonessential**.

NOTE

Suggested fixtures are illustrated in this section.

(20) Clamps, tack welds of other holding devices are permitted.

(21) Fixtures. The use of a fixture is permitted but not required, provided that no support for molten weld metal is present. Essential (Refer to Work Packages 005 01 (Navy), 005 02 (Air Force), or 005 03 (Army) for service specific requirements).

b. Table 4 provides a Cross Reference of Process and Base Metal of available WPSs within this general series manual.

Table 4. Process and Material Groups Cross Reference

Process	MATERIAL GROUPS						
	Steel (Group I)	Stainless Steel (Group II)	Nickel Alloys (Group III)	Aluminum (Group IV)	Magnesium (Group V)	Titanium (Group VI)	Cobalt (Group VII)
GTAW	1, 11, 12, 13, 27, 28, 29, 54	2, 14, 15, 30, 31, 32, 40, 47	3, 16, 17, 33, 34, 35, 41, 44-46, 50	4, 18, 19, 20, 36, 37, 38, 43, 52	5, 21, 22, 23, 48	6, 24, 25, 49, 53	7, 26, 39, 42, 51
GMAW	8						
SMAW	10						
Braze	Groups I, II, and Brass – 9 Stainless Steel – Stainless Steel (SS-SS) - 55						

c. Table 5 provides a Cross Reference of Thickness and Base Metal of available WPSs within this general series manual.

Table 5. Thickness and Material Group Cross-Reference

Thickness	MATERIAL GROUPS						
	Steel (Group I)	Stainless Steel (Group II)	Nickel Alloys (Group III)	Aluminum (Group IV)	Magnesium (Group V)	Titanium (Group VI)	Cobalt (Group VII)
0.016							26
0.020		14		20	23		
0.032 0.035	11, 54	15, 40, 47	41, 44-46, 50	18, 43, 52	21,48	49, 53	39, 42, 51
0.040			17			24	
0.050	1	2	3	4	5	6	7
0.063	27, 28, 29	30, 31, 32	33, 34, 35	36, 37, 38			
0.125	12, 13		16	19	22	25	
0.250	8, 10						
Braze	Groups I, II, and Brass – 9 Stainless Steel – Stainless Steel (SS-SS) - 55						

14. **WELDING BASE METALS.**

NOTE

It is the decision of the individual service to choose the required metals for their particular applications within each material groups. Refer to Work Packages 005 01 (Navy), 005 02 (Air Force), or 005 03 (Army) for service specific requirements.

a. Table 2, of this Work package, lists some recommended base metals within their respective groups in which a welder can use for certification. The base metals listed in Table 2 is not all-inclusive and is used a guideline to select base metals, based on cost or availability.

b. The base metals, listed as groups, in Work Package 003 provides alternative specifications, as necessary, which may be used for certification.

NOTE

The individual service will determine the metal groups to which the welders will be certified.

c. Renewal of certification of a performance specification is required for brazers when:

(1) Three or five years has passed from the date of last certification or recertification. Refer to Work Packages 005 01 (Navy), 005 02 (Air Force), or 005 03 (Army) for specific service recertification intervals.

(2) A brazer has not used the brazing process for a period of six (6) months or more.

15. **CERTIFICATION MATERIALS AND PROCEDURES.**

16. **GTAW.**

NOTE

Successful GTAW certification on 0.063 inch sheet certifies the welder for 1/2T (0.032”) through 4T (0.250”) thick materials.

17. **Sheet.**

a. Each position (2G, 3G, and 3F) and base material (Groups I, II, III, and IV) will consist of a specimen made from two sheets of 1.5” x 6” sheets with a thickness of 0.063”.

b. Each sheet is de-burred, cleaned, and tack welded at each end and placed in a weld fixture. Once the specimen is placed in the weld fixture, the specimen shall not be removed during testing.

c. Only the fixture may be moved to accommodate welder comfort.

NOTE

Successful GTAW certification on 0.050 inch tubes certifies the welder for 1/2T (0.025”) through 4T (0.200”) thick materials.

NOTE

Refer to Figure 4 for materials, dimensions, and NSNs of certification tubes.

18. **Tubes.**

a. Position 6G is illustrated in Figure 5. It will consist of one inch diameter tubing, 4 inches long, with a wall thickness of 0.050 inch for every metal group.

b. De-burr and clean.

c. Tack weld together (on the bench) in three places around the joint circumference.

d. The tack-welded tube assembly is slipped over the end of the weld fixture described in Figure 6.

e. The tube shall not be rotated in the fixture at any time while welding. This is a FIXED-Position weld test.

f. Weld the entire joint in this position.

g. Only the fixture can be moved around to accommodate welder comfort provided the tube stays in the 6G position.

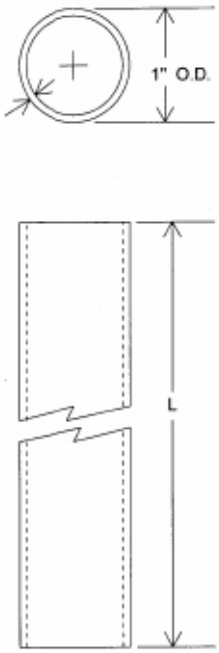

Dash #	Material	NSN	"L" (min)
- 1	AISI 4130 Cond. "N" Low Alloy Steel	4710-00-277-9887	60"
- 2	AISI 347 Stainless Steel Annealed	4710-00-585-7053	96"
- 3	AA 6061 T6 Aluminum Alloy	4710-00-289-3036	96"
- 4	3AL 2.5V Titanium Alloy Annealed	4710-00-345-8474	60"
- 5	Inconel 718 Nickel Alloy Annealed	4710-01-425-0916 P/N 52-12-5	30" to 48"
- 6	L605 Cobalt Alloy Annealed	4710-01-425-0937 P/N 52-20-10	30" to 48"
- 7	AZ31B-F Magnesium Alloy	4710-01-425-0901 P/N 3-1-02	30" to 48"

Notes:
1. Seamless or Welded Tubing

MATERIALS ENGINEERING LABORATORY U.S NAVAL AIR STATION NORTH ISLAND - SAN DIEGO, CALIF. BY: MIKE POIRIER - CODE 43430 -EX-57828	TOLERANCES UNLESS OTHERWISE SPECIFIED FRACTIONAL + - 1/32 / DECIMAL .X = +/- .030, .XX = +/- .010, .XXX = +/- .005 / ANGULAR + - 30' DATE: 12/20/95 REVISED: XX/XX/XX	WELD CERTIFICATION TUBE SK340-00185

Figure 4. Weld Certification Material Requirements for Tubes

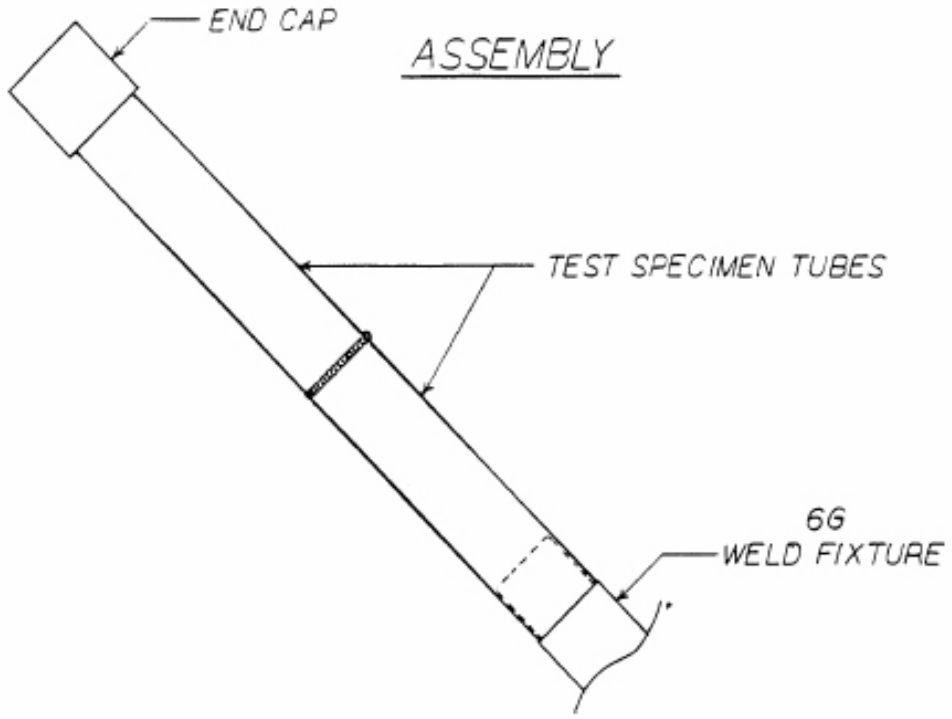

Figure 5. Position 6G

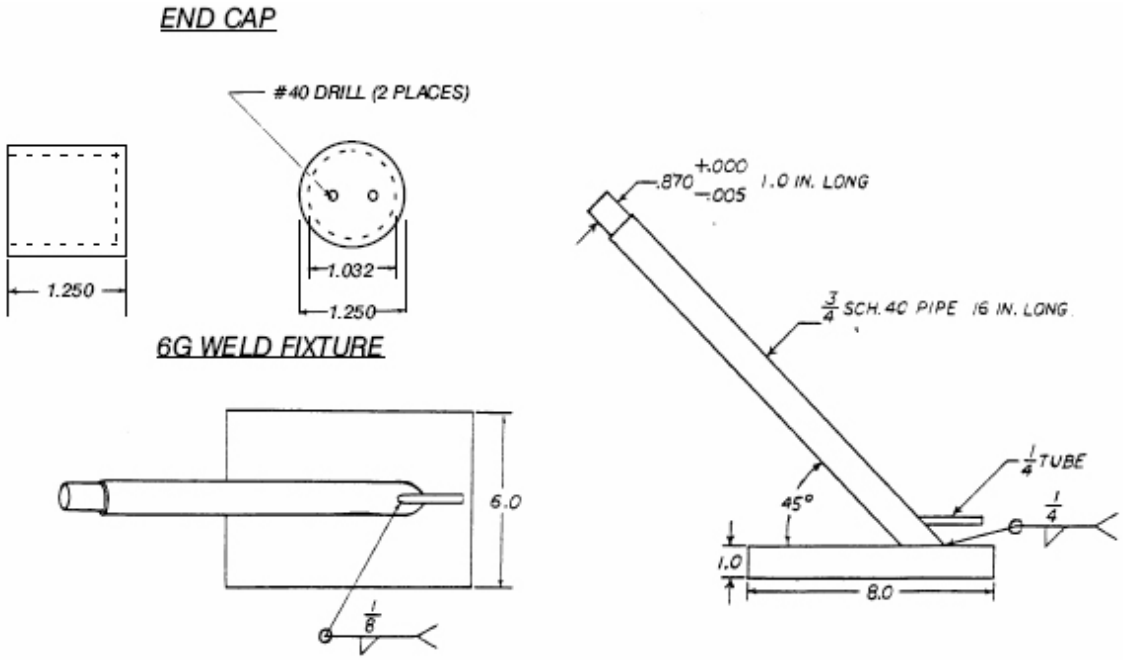

Figure 6. Top View, Side View and End Cap

NOTE

Successful SMAW/GMAW certification on plate certifies the welder for 1/2T - 4T, depending on qualification material and plate thickness.

19. **GMAW and SMAW.**

a. Certification procedures for GMAW and SMAW will be accomplished in the 1G/2F position as illustrated in Figure 1, or as determined by service command.

b. SMAW plate thickness shall be 0.250” for carbon steel (Group I) certification.

c. GMAW plate thickness shall be 0.250” for aluminum (Group IV) certification.

d. GMAW plate thickness shall be 0.125” for stainless steel (Group II) for certification.

20. **WELDING FIXTURES.**

a. Refer to Work Packages 005 01 (Navy), 005 02 (Air Force), or 005 03 (Army) for service specific requirements for information regarding availability of welding fixtures.

21. **DETAILED BRAZING CERTIFICATION REQUIREMENTS.**

a. Brazing Materials

- 4130 Low Alloy Steel (Group I).
- 304 Stainless Steel (Group II).
- Brass (AMS 4611).

b. Certification tests in TB (see WPS #9), are intendeded to determine the ability of brazers and brazing operators to make sound brazed joints.

c. RECORD OF TESTS. The training department/shop supervisor shall maintain a record of the procedures, including the essential variables under which brazers and brazing operators are examined and the results of the examinations.

d. Type and Number of Test Specimens:

(1) The type of materials and the number of pieces that makeup the test assembly is given in Figure 7. One completed test assembly, comprises of all materials and an assembly as shown in Figure 7. Fittings may vary in type but the base metal shall be a Brass composition only.

(2) Tests for brazers shall meet the requirements of Figures 7 and 8.

(3) Test specimens shall not be rotated during brazing operations.

e. Brazers. Each brazer who is qualified to braze under the rules of this work package shall pass the tests prescribed herein for performance certification.

f. Pressure Testing. Pressure test finished assembly with 3000 psi for leaks with MIL-PRF-83282 hydraulic fluid or equivalent. Hold for 10 minutes. No leaks or weeping permitted.

g. Specimens for Torch Braze. The dimensions and preparation of the workmanship sample specimen shall conform to the requirements of Figures 7 and 8.

(1) The representative joint shall be sectioned as required in Figure 7, Sheet 1.

(2) After smoothing of the cut sides, each specimen shall be etched with a suitable etchant to give clear definition of the braze.

(3) When examined with a minimum of 3X power magnifying glass, the total voids, inclusions or unbrazed areas shall not exceed 20% of the length of the overlap.

h. Peel Testing. As an alternate method for pressure testing the brazed tube the peel test may be used for certification.

i. Visual Acceptance Criteria. In order to pass the peel test, the specimens shall show evidence of brazing filler metal along each edge of the joint. Specimens shall be separated or peeled by clamping across the major diameter. The separated faying surfaces of joints shall meet the following criteria:

(1) The total area of defects (unbrazed areas, flux inclusions, etc.) shall not exceed 20% of the total area of any individual faying surface.

(2) The sum of the lengths of the defects measured on any one line in the direction of the lap shall not exceed 25% of the lap.

(3) No defect shall extend continuously from one surface of the joint to the other surface, irrespective of the direction of the defect.

22. **MACHINE WELDING CERTIFICATION REQUIREMENTS.**

a. Machine welding processes include but are not limited to electron beam welding, laser welding, orbital welding, resistance welding, and dabber TIG.

b. Machine welder operators do not have to be certified welders. The certification usually applies to very specific or limited production parts and must have engineering approval prior to qualification, certification, and application to aviation components or parts.

c. The certification is limited to the welding conditions of the test weld with regard to welding process, base metal composition, thickness, base metal form type of weld and other welding conditions.

23. **CERTIFICATION PROCEDURE FOR ELECTRON BEAM WELDING MACHINE OPERATORS.**

a. Refer to the component manual for specific certification/recertification and weld quality requirements.

24. **CERTIFICATION PROCEDURE FOR LASER BEAM WELDING MACHINE OPERATORS.**

a. Refer to the component manual for specific certification/recertification and weld quality requirements.

25. **CERTIFICATION PROCEDURE FOR RESISTANCE WELDING MACHINE OPERATORS.**

a. General. Specific operator certification process shall be determined by each Military Service. Refer to the component manual/AWS D17.2 for specific certification and testing requirements.

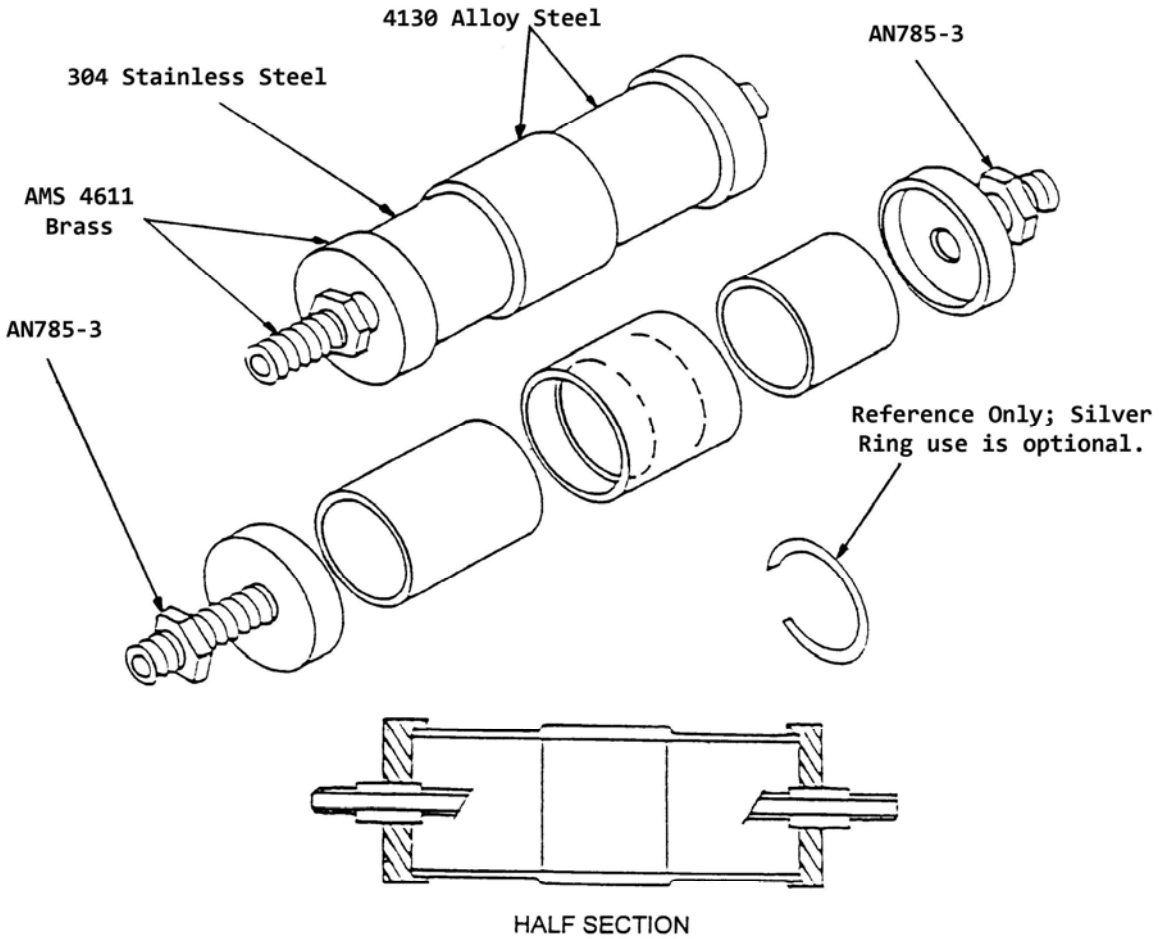

NOTES

1. Braze Operator
   a. Manufacture silver solder ring shown in separate right hand section if the use of this optional item is determined.
   b. Braze specimens as shown in upper diagram.

2. Authorized examination and evaluation facility:
   a. Prepare specimen for evaluation by sawing or otherwise cutting in two as shown in the lower diagram.

Figure 7. Specimen Requirement for Silver Brazing (Sheet 1 of 2)

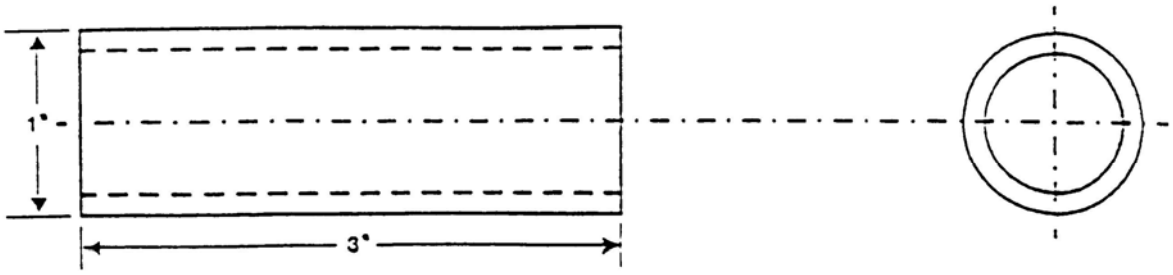

1" outer diameter x 0.049" x 3" 4130 steel tube-one required per prepared specimen.

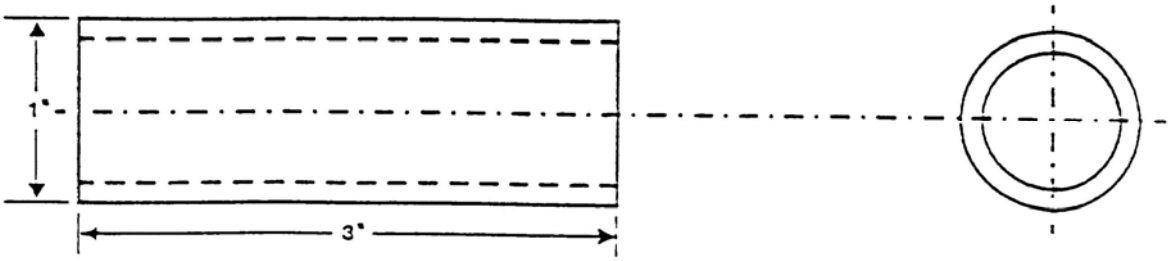

1" outer diameter x 3" x 0.049" staiinless steel tube-one required per prepared specimen.

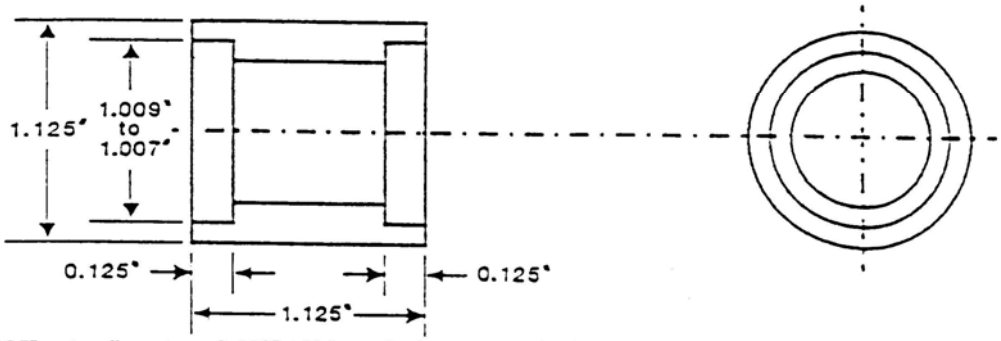

1.125" outer diameter x 0.120" 4130 steel tube-one required per prepared specimen.

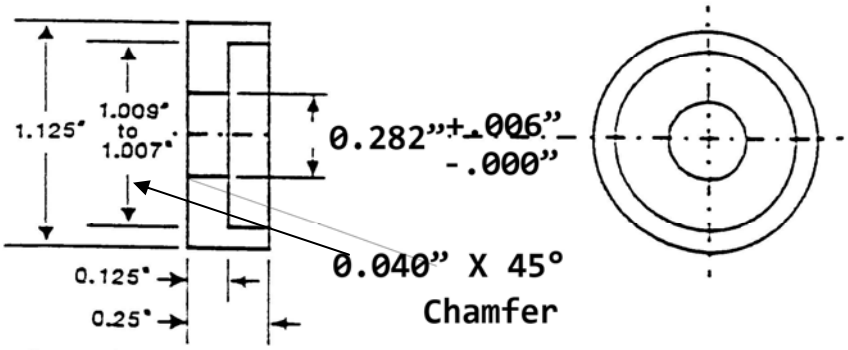

1.125" outer diameter brass rod-two required per prepared specimen.

Figure 7. Specimen Requirement for Silver Brazing (Sheet 2)

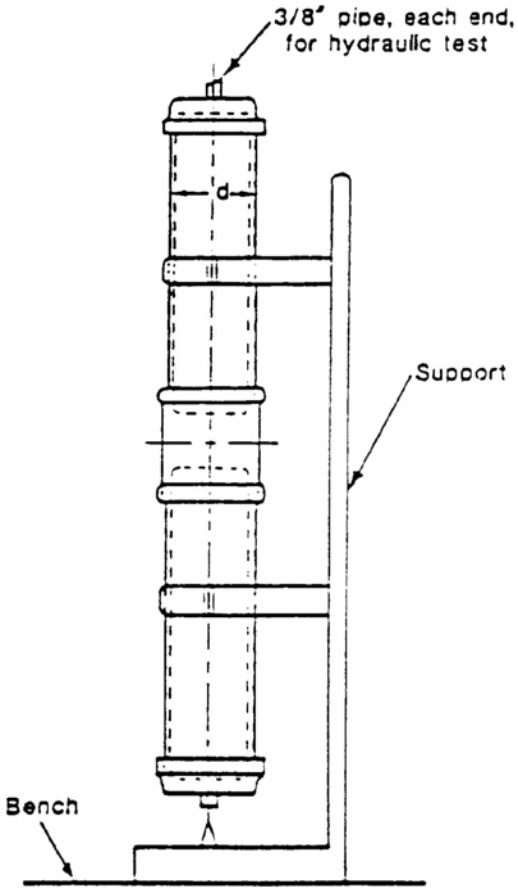

NOTES

1. Workmanship sample brazed in the vertical position shall qualify for all brazing positions.
2. Specimen shall not be rotated during brazing operations.
3. Protect threads from damage.

Figure 8. Vertical Position Brazed Workmanship Sample

ORGANIZATIONAL, INTERMEDIATE AND DEPOT MAINTENANCE NAVY SPECIFIC WELDING CERTIFICATION REQUIREMENTS

Reference Material

Catalog of Naval Training Courses ..... NAVEDTRA 10500
Navy Aviation Maintenance Program (NAMP) ..... OPNAV 4790.2
Specification for Fusion Welding for Aerospace Applications ..... AWS D17.1
Specification for Resistance Welding for Aerospace Applications ..... AWS D17.2
Specification for Welding Procedure and Performance Qualification ..... AWS B2.1
Standard Method for Evaluating the Strength of Brazed Joints ..... AWS C3.2

Alphabetical Index

Subject	Page No.
Certification Procedures	4
General	2
Intermediate and Organization Level Welding Recertification Requirements	9
'Mail-in' Recertification Procedure	9
Naval Air Unique Certification Requirements	2
Proficiency Documentation	8
Requirements	4
Responsibilities	2
Weld School Recertification Procedure	13

Record of Applicable Technical Directives

None

NOTE

This entire work package series contains **MANDATORY** information. Deviations are not permitted unless authorized by competent or cognizant authorities.

1. **NAVAL AIR UNIQUE CERTIFICATION REQUIREMENTS.**

NOTE

Where conflicts between the American Welding Society (AWS) specifications and this manual exist, this manual shall take precedence.

a. This work package defines the weld qualification and certification for the U. S. Navy and modifies the general requirements of Work Package 005 00.

b. Welders qualified per this Work Package are certified to perform welding on Naval aviation structures, engines, components, and support equipment as authorized by Type, Series, Model (TMS) technical documents.

c. The requirements for qualifying/certifying and maintenance of DEPOT level civilian welders are governed by local process specifications and takes precedence over this work package.

2. **GENERAL.**

a. Naval aviation welders may be required to certify in the following processes:

(1) Gas Tungsten Arc Welding (GTAW).

(2) Gas Metal Arc Welding (GMAW).

(3) Shielded Metal Arc Welding (SMAW).

(4) Oxyfuel Brazing (OFB).

b. A Naval Aviation welder must be trained, tested, and certified per the requirements set forth within this manual. The certification requirements are developed from AWS D17.1 for fusion welding, AWS D17.2 for resistance welding, AWS C3.2 for torch brazing and AWS B2.1 for performance and procedure qualification.

c. Training courses presented at the COMFRCs, meet these requirements (refer to Table 1, for more information). Other service schools that meet or exceed the Learning Objectives and qualification requirements may be suitable.

d. Testing and certification must be accomplished within the guidelines listed in OPNAV 4790.2 and this manual.

3. RESPONSIBILITIES

a. Supervisors are responsible to ensure that only personnel fully trained and certified in accordance with this section are permitted to perform welding on aircraft, missile, weapon systems and support equipment. Activities that test and evaluate test welds in accordance with this technical manual are identified in Table 2.

Table 1. Welding Schools and Course Numbers

COURSE NUMBER	TITLE	COURSE LENGTH
N-701-0007	Aircraft Equipment Basic Welder Qualification Gas Tungsten Arc Weld NAVY - NEC 7222 if applicable to Rate Marine - MOS 6043	Refer to CANTRAC
N-701-0008	Certification Requalification for course N-701-0007	
N-701-0009	Support Equipment Basic Welder Qualification Torch Brazing and Shielded Metal Arc Weld NAVY - NEC 7222 if applicable to Rate Marine - MOS 6043	
N-701-0010	Certification Requalification for course N-701-0009	
N-701-0025	GMAW Welder Certification (Limited Applicability)	
SCHOOLS		
COMFRC-SOUTHEAST Jacksonville, FL		
COMFRC-EAST Cherry Point, NC		
COMFRC-SOUTHWEST North Island, CA		
COMFRC-MID ATLANTIC (COMFRC-SOUTHEAST Jacksonville Detachment) Oceana VA		

Table 2. List of Authorized Welding Examination and Evaluation Facilities

COMFRC-SOUTHEAST NAS Jacksonville, FL 32212 (ATTN: Materials Engineering Division)
COMFRC-EAST MCAS Cherry Point, NC 28533 (ATTN: Materials Engineering Division)
COMFRC-SOUTHWEST NAS North Island, San Diego, CA 92135 (ATTN: Materials Engineering Division)
For activities in the Point Mugu area only: Pacific Missile Test Center Point Mugu, CA 93042 (ATTN: Quality Control Officer, Code 4000, Engineering Materials Testing Laboratory, Technical Shop Division, Box 10)

4. **REQUIREMENTS.**

a. PERSONNEL.

(1) Physical Examinations. Annual physical examination may be required to permit early detection of possible detrimental effects resulting from chronic exposures. Local medical authorities and the Industrial hygienist shall set the frequency of specific tests based on exposure data.

(2) Physical requirements. Each activity shall establish reasonable and appropriate physical requirements for welders and welding operators.

(3) Visual Acuity Requirements. Welders shall have vision acuity of 20/30 or better in either eye and shall be able to read a Jaeger No. 2 Eye Chart at a distance of 16 inches. Natural or corrected vision may be used to achieve eye test requirements. Vision shall be tested every two years.

b. WELDING AND BRAZING POSITIONS.

NOTE

Refer to WP 005 00 for welding and brazing positions descriptions.

(1) Aviation and missile welders or welding operators shall be certified in accordance with this manual to positions 2G, 3G, and 3F for each required metal group. This certification requirement applies to GTAW process only.

(2) Support equipment welders shall be certified in accordance with this manual to positions 1G and 2F. This certification requirement is for GMAW and SMAW processes only.

(3) Brazing workmanship sample is positioned in a fixture, holding in the vertical (lengthwise) position and shall not deviate from vertical greater than 10° at any time.

c. WELDING METAL GROUP. Naval aviation welders are required to be certified in the four basic metal groups:

(1) Group I - Steel

(2) Group II - Stainless Steel Alloy

(3) Group III - Nickel Base Alloy

(4) Group IV - Aluminum Alloy

d. WELD PACKAGES. When requested by the Maintenance Activity, (refer to '**MAIL-IN' RECERTIFICATION PROCEDURE**), the receiving weld school shall send a Mail-in Recertification Weld Package. (Refer to Table 3). A Weld Package consists of enough metal for each metal group and position for a complete recertification and will depend on the CANTRAC course number. (Refer to Table 1, for description.)

5. **CERTIFICATION PROCEDURES.**

a. GENERAL.

(1) Qualified welders shall be certified for each position and metal group listed in paragraphs 4.b and 4.c of this work package.

Table 3. Weld Certification Package

N-701-0008	N-701-0010
Process: GTAW Positions: 2G, 3G, 3F Mtl Grps: I, II, III, IV • 6 pcs - 1.5” x 6” x 0.063” per Mtl Grp • 24 pcs total	Process: SMAW Positions: 1G, 2F Mtl Grp:I • 4 pcs - 2” x 6” x 0.250” (1G)
	Process: TB Position: Vertical Mtl Grp: (WP 005 00, Figure 7) • 1 Assembly (WP 005 00, Figure 7) • Includes AN fittings.

NOTE

Initial/Recertification weld specimens must pass ALL the required Metal Groups and/or required positions. Failure in either one (group or position) constitutes non-certification and course failure.

(2) To achieve certified status, new welders/torch brazers shall successfully complete naval welding training school courses numbered N-701-0007 and N-701-0009 as listed in Table 1. After successful completion of initial training/torch brazing training, the candidate shall then return to their duty station for on-the-job training (OJT).

NOTE

After successful completion of course N-701-0007, the candidate welders shall be given their own visually acceptable butt and fillet test plates (stainless steel and aluminum). These test plates will be used as a visual comparison during their proficiency audits and the plates will be retained by the candidate’s supervisor. These plates shall accompany the candidate/welder when duty stations are changed.

(3) The responsibility remains with the Maintenance Officer to ensure that welding school graduates are proficient prior to performing independent welding repair. Component OJT will be documented in the Welder’s Log (Figure 1) with pertinent technical directives, i.e., maintenance instruction manuals (MIM), airframe changes (AFC), power plant bulletins (PPB), fleet support team (FST) engineering documents, work packages or on-site written authorization from a cognizant engineer.

(4) Successful completion of Component OJT may be documented using Figure 1 (Sheet 3).

1. NAME			2. ORGANIZATION			
3. DATE	4. HOURS	5. WELD REPAIR TECH DATA	6. NOMENCLATURE	7. METAL GROUP	8. WELD PROCESS	9. VERIFIED BY

Figure 1. Welder's Log and Instructions (Sheet 1 of 3)

Item 1	Welder's last name, first name.
Item 2	Assigned Activity.
Item 3	Write all dates in alphanumeric DAY/MONTH/YEAR format, for example 05 OCT 2009
Item 4	The time the individual welded in the process and group.
Item 5	The technical directives showing the weld procedure for each component being repaired.
Item 6	In this block the following can be entered:
	a. The nomenclature/part number of the item/part.
	b. Proficiency Training
	c. QA Verification
Item 7	Metal group list in Work Package 003
Item 8	Welding process. Example: GTAW (refer to WP 005 01, **GENERAL**)
Item 9	Signed by the work-center supervisor. The work-center supervisor's welding log will be signed/stamped by QA. (Refer to **Work Package 005 01, PROFICIENCY DOCUMENTATION,)**

Figure 1. Welder's Log and Instructions (Sheet 2)

Component OJT Verification

NAME/RANK:

Certification Date:

Certified welders shall complete OJT prior to welding on aeronautical components and shall be documented utilizing NA-01-1A-34, Figure 3-12. Extent of OJT shall be determined locally according to welder's individual skill level

Upon completion of OJT, welders must successfully weld one of each applicable process/position (GTAW only)/metal group he/she is currently certified to perform. Each weld will be visually evaluated by the work center supervisor and QAR and documented below.

PROCESS/ METAL GROUP	2G SAT/UNSAT	3G SAT/UNSAT	3F SAT/UNSAT	W/C SUPERVISOR SIGNATURE	QAR SIGNATURE
GTAW/I					
GTAW/II					
GTAW/III					
GTAW/IV					
	1G SAT/UNSAT				
SMAW/I					
	1G SAT/UNSAT				
GMAW/I					
GMAW/II					
	ALL SAT/UNSAT				
OFB					

This is to certify:_____ has successfully completed all established requirements for Aeronautical Welder OJT and his/her proficiency has been verified

Work Center Supervisor Signature_____Date:_____

QAR Signature _____Date:_____

Maintenance Officer Signature _____Date:_____

Figure 1. Welder's Log and Instructions (Sheet 3)

NOTE

Military and civilian welders or welding operators at the Intermediate level shall be certified every year to the same requirements as an original certification.

b. CERTIFICATION REQUIREMENTS FOR MILITARY AND CIVILIAN WELDERS AT THE INTERMEDIATE LEVEL.

(1) To maintain certification, all military and civilian welders at the Intermediate Level must weld at least one ferrous and one non-ferrous specimen every 30 days. They may be coupons or actual component repairs.

(2) This requirement does not apply to COMFRC Depot Level civilian welders.

c. CERTIFICATION REQUIREMENTS FOR CIVILIAN WELDERS AT THE DEPOT LEVEL.

(1) Certification requirements for COMFRC DEPOT Level civilian welds shall be per local process specifications.

d. WELDER CERTIFICATION PROCEDURES NOT CONTAINED IN THIS SECTION.

(1) This section covers most welding conditions that will be experienced by military aircraft, missile welders, and support equipment.

(2) For welding operations not contained herein, contact your local support COMFRC DEPOT.

6. **PROFICIENCY DOCUMENTATION.**

a. INTERMEDIATE LEVEL. In order to maintain certification, all military and civilian welders at the Intermediate Level must demonstrate proficiency by welding at least ***one ferrous*** and ***one non-ferrous*** specimen every 30 days; the demonstration may be coupons or actual component repairs.

(1) The welder must document proficiency in the Welder's Log (Figure 1) either by practice welds or by actual component welding. The Welder's Log shall be completed per Figure 1 (Sheet 2).

(2) The work-center supervisor shall verify the Welder's Log every 30 days for compliance.

(3) If the work-center supervisor is the welder, then Quality Assurance is responsible for verifying the Welder's Log every 30 days.

(4) If a welder is unable to, or does not document one ferrous and one non-ferrous component or practice weld for a period of 90 days, the welder must recertify in accordance with paragraphs **MAIL-IN' RECERTIFICATION PROCEDURE** or **WELD SCHOOL RECERTIFICATION PROCEDURE**.

NOTE

Suspension will be by process and metal group. A suspension of a particular process and metal group does **not** revoke or suspend the welder's entire certification.

b. An IMA welder's certification may be **suspended** if conditions in paragraph **PROFICIENCY DOCUMENTATION** apply.

c. DEPOT LEVEL. Proficiency documentation for COMFRC DEPOT level civilian welders shall be per local process specifications.

7. **INTERMEDIATE AND ORGANIZATION LEVEL WELDING RECERTIFICATION REQUIREMENTS.**

NOTE

Initial/Recertification weld specimens must pass ALL the required Metal Groups and/or required positions. Failure in either one (group or position) constitutes non-certification and course failure.

a. A certified welder shall recertify when one of the following conditions apply:

(1) One year has passed since last certification/recertification.

(2) The welder fails to maintain the Welder's Log as described in **PROFICIENCY DOCUMENTATION.**

(3) There is specific reason to question the ability of a welder or welding operator to meet the requirements for certification in a given welding process. Specific reasons may include poor quality welds, visual acuity, health, and behavior.

(4) If the welder fails to maintain certification after one year, he/she will attend course N-701-0008/0010, as applicable, and complete all four of the basic weld groups.

(5) If the welder is not assign to a welding billet for 3 years or more, he/she will attend the N-701-0007/N-701-0009 as applicable.

8. **'MAIL-IN' RECERTIFICATION PROCEDURE.**

NOTE

Refer to Figure 2 for Mail-In Recertification Procedure sequence chart.

a. The welder must posses a current welding certification in the appropriate category.

b. The activity Maintenance Officer, after ensuring the welder is eligible for recertification, shall request, by best methods, the required test specimens in advance (at least 3 months prior to expiration) from the nearest welding school (refer to Table 1), providing the following information:

- Welder's Name.
- Certification expiration date.
- Categories required for certification.
- Examination and evaluation facility of last certification.
- Complete and accurate physical return mailing address (including commercial and DSN phone numbers and the welder's valid email address).

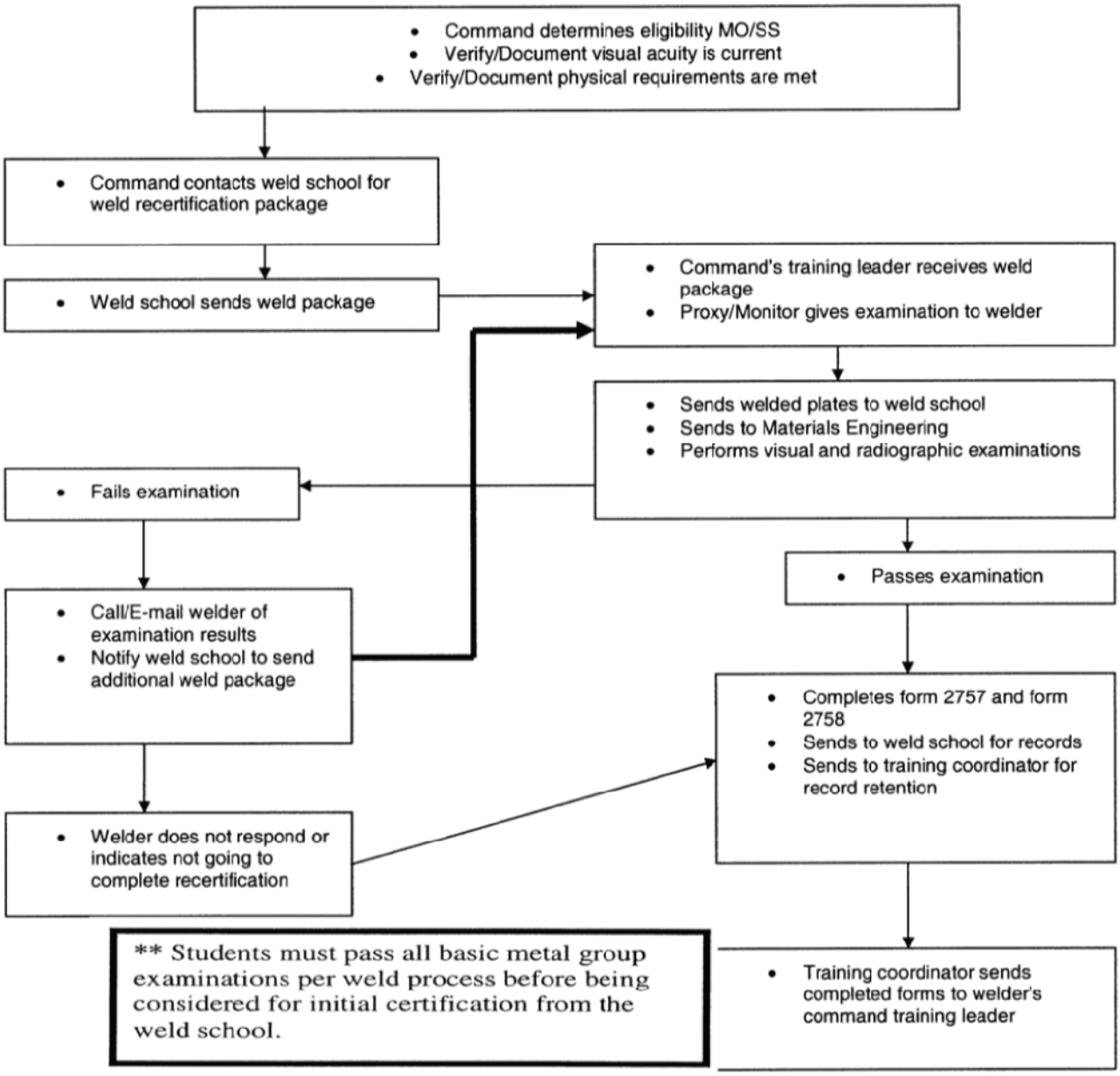

Figure 2. Mail-In Recertification Procedure

NOTE

All test plates received by the evaluation facility shall be in the as-welded condition. Any wire brushing, grinding or other cosmetic operations will be cause for specimen rejection, except for SMAW and GMAW which may be wire brushed by hand.

c. The receiving welding school shall furnish, if requested, a complete Weld Certification Package (See paragraph **CERTIFICATION PROCEDURES and Table 3**) to the requestor's activity and is based on the recertification course number.

d. Welding fixtures, such as those shown in Figure 3, are recommended for training and recertification and may be locally manufactured per drawings listed in Table 4.

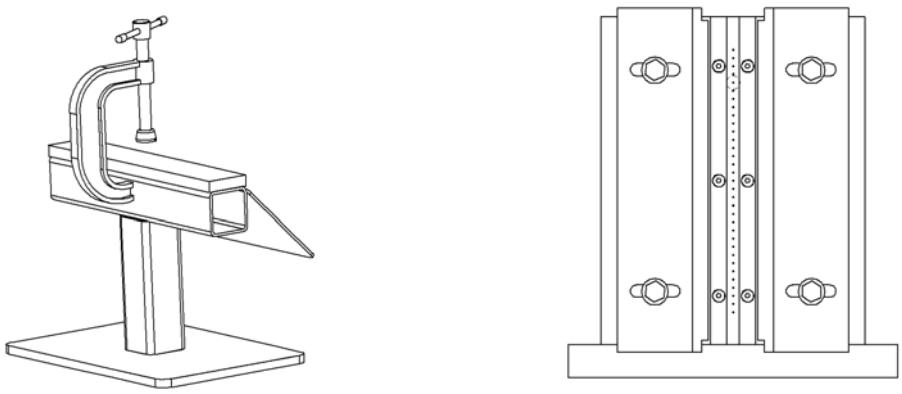

Figure 3. Typical Welding Fixtures

Table 4. Navair Fixture Drawings

FIXTURE	DRAWING NO.
Welding Fixture Assembly	(96919) 18D8609
Welding Clamp Fixture	(96919) 18D8610
NOTE: Fixture Drawings are available from COMFRC-East, Cherry Point, NC	

e. The Maintenance Officer or the designated representative shall ensure that the welder identified on the specimen welds each specimen in the correct position/orientation. All recertification welding shall be performed in the welder's normal duty shop, except the Maintenance Officer may designate other locations as necessary.

f. Return complete Weld Certification Package specimens and signed DD 2757 to the receiving weld school or at one of the examination facilities listed in Table 2.

g. Upon receipt of the completed Weld Certification Package specimens and within 10 working days, the receiving welding instructor at the examination facility will complete Forms 2757 and 2758 and process the specimens through NDI and Materials Engineering Division.

NOTE

Metal Group Specimen is defined by Material/Position. For example: Aluminum/ 2G Position. Failure of a single Metal Group Specimen is limited to the Material/Position.

NOTE

Recertification. Welders must pass ALL the required Metal Group Specimens and required positions. Failure in either group or position constitutes non-certification.

(1) If a Metal Group Specimen (Original) fails to meet minimum requirements the welder shall have one (1) additional recertification examination (Re-examine Weld Package) of that Metal Group Specimen for re-testing.

(2) A Re-examine Weld Package consists of a double set of the Metal Group Specimen, per position, and accompanying DD Form 2757.

(3) Only one (1) specimen from the Re-examine Weld Package, per the Metal Group Specimen and position, needs to prove satisfactory.

(4) If BOTH specimens from the Re-examine Weld Package failed, the welder shall require further training by attending the recertification course N-701-0008/0010, as applicable.

h. The receiving welding instructor forwards completed DD Forms 2757 and 2758 to the Service Training Coordinator. The Service Training Coordinator will report results to the welder's activity. Overseas activities and deployed ships will be notified by message and follow up with appropriate documentation.

9. **WELD SCHOOL RECERTIFICATION PROCEDURE.**

NOTE

Figure 4 provides a simplified flowchart for school recertification.

a. Intermediate Maintenance Activity (IMA) Welders may train, test, and recertify by attending the applicable recertification courses listed in Table 1 and/or the Catalog of Naval Training Courses (CANTRAC), NAVEDTRA 10500.

NOTE

Refer to Table 1 and/or the Catalog of Training Courses (CANTRAC), NAVEDTRA 10500 for additional information on training courses.

b. IMA welders (military and civilian), may have received training outside of the welding schools listed in Table 1 and may obtain an initial certification by successfully completing the recertification course listed in Table 1.

c. IMA welders must certify to the standards of this work package at one of the welding schools listed in Table 1. Individuals detailed on permanent change of station (PCS) orders should be routed via one of the depots for recertification.

d. Recertification courses listed in Table 1 and the CANTRAC provides refresher training, testing, and certification for IMA welders to NA 01-1A-34 for GTAW, SMAW and GMAW. Refresher training, testing, and certification for IMA torch brazers to NA 01-1A-34 may be accomplished through the course listed in Table 1 and the CANTRAC.

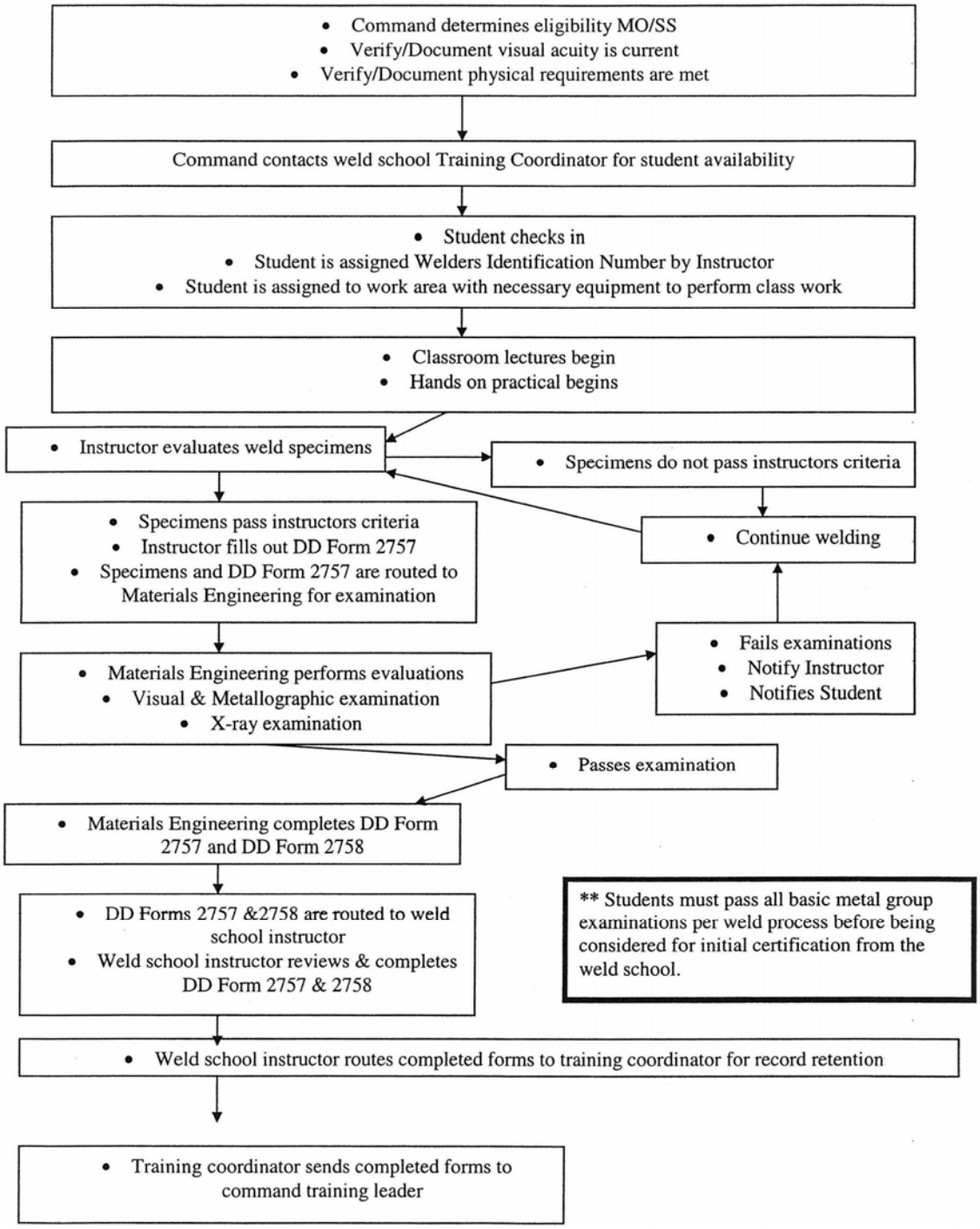

Figure 4. Weld School Recertification Procedure

THIS PAGE INTENTIONALLY LEFT BLANK

ORGANIZATIONAL, INTERMEDIATE AND DEPOT MAINTENANCE

AIR FORCE - QUALIFICATION CERTIFICATION REQUIREMENTS

Reference Material

General Welding Certification Requirements ..... WP 005 00
Specification for Fusion Welding for Aerospace Applications ..... AWS D17.1

Alphabetical Index

Subject	Page No.
Air Force Unique Certification Requirements	2
Recertification Intervals	2
Fixtures and Coupons	2
Certifying Official	5
Examining Official	4
Observing Official	3
Welder's Supervisor	4
Welding Examination and Evaluation	3
Welding Examination Record	3

Record of Applicable Technical Directives

None

NOTE

This entire Work Package Series contains **MANDATORY** information. Deviations are not permitted unless authorized by competent or cognizant authorities.

1. **AIR FORCE UNIQUE CERTIFICATION REQUIREMENTS.**

a. The USAF has specific, established procedures and requirements that differ from the Navy and the Army.

NOTE

Air Force Military Units that are unable to perform the required test may send either the welder to OC-ALC, 76 MXW/PMXG/OB/Welding Training Facility, Bldg 3001 Post K-83, Tinker AFB, OK 73145 or the completed test welds to: OC-ALC, 76 MXW/MXSG/MXDTAE, Physical Science Laboratory, Bldg 3001 Post T-69, Tinker AFB, OK 73145; provided appropriate funding is established

b. Levels of Certification. Civilian welders assigned to ALCs may be divided into a position/material certified welder, Level I, or Level II welders. Each type of certification is described below:

(1) Position/Material Certified Welder. This individual is qualified to specific processes or positions for a given material group. Usually this welder is performing a specific task.

See SUPP D (2) Qualification of the WPS (for certification) will be accomplished by the cognizant engineer using the requirements of AWS D17.1.

(3) Level I. Level I is attained by qualifying to two or more basic positions within a base metal group. Usually 1G (flat) and 2F (horizontal) positions are required to meet Level I. Each ALC will determine what positions and base metal groups are required to achieve this level of certification.

(4) Level II. Level II is attained by qualifying to the 6G position within a base metal group. An individual does not have to be Level I certified prior to achieving Level II certification. Each ALC will determine what base metal groups are required to achieve this level of certification.

(a) Work Package 005 00, Figure 4, provides information for base materials and stock numbers for certification using tubes.

See SUPP D

c. Active Duty, Reserve, and Air National Guard will qualify to the 6G-position. (Note limitation on thin materials WP 005 00 Table 1 note 1). The MAJCOM Fabrication Superintendent or designation shall establish which base metal groups are required for certification. Base Metal groups may vary by operating location.

2. **RECERTIFICATION INTERVALS.**

- ALC civilians (5 years).
- Field units(5 years).
- Recertification is required when a welder has not welded for a period of 180 days.

3. **FIXTURES and COUPONS.**

a. Design drawings for weld test fixtures are listed in Table 1. Local modifications are permissible upon cognizant engineering written specification. Braze test coupon design detailed in WP 005 00 Figure 7 is optional. Alternative test coupon design is permissible upon cognizant engineering's written specification.

See SUPP D **Table 1. Welding Fixture Drawing Chart**

FIXTURE DRAWING	NO.
Butt Joint Welding Assembly	8030688
Butt Joint Welding Clamp	8030689
Butt Joint Welding Base Assembly	8030683
Butt Joint Welding Base	8030690
T Joint Welding Assembly	8030682
T Joint Welding Base	8030690
T Joint Welding Base Assembly	8030693
T Joint Welding Base Assembly	8030684
T Joint Welding Clamp Assembly	8030685
T Joint Welding Clamp	8030686
Note: Fixture drawings are available from https://jedmics.tinker.af.mil/webjedmics/index.jsp https://jedmics.robins.af.mil/webjedmics/index.jsp	

4. **WELDING EXAMINATION RECORD.**

a. Field units and ALC civilians will use the DOD Form 2757 (refer to WP 005 00, Figure 2).

(1) DOD Form 2758 is an optional form, which may be used in addition to the DOD Form 2757 but not replace the DOD Form 2757.

b. Each required signature on DOD form 2757 (blocks 13, 20a and 21a) shall include the official's printed name in addition to the signature.

5. **WELDING EXAMINATION AND EVALUATION.**

a. Weld certification specimens may be examined by properly equipped and trained unit Nondestructive Inspection (NDI) laboratories or servicing ALCs.

6. **OBSERVING OFFICIAL.**

a. The observing official does not necessarily need to be a qualified welder but shall have demonstrated understanding of welding essential variables and the performance qualification process. The Observing Official must be appointed in writing.

b. The observing official is responsible for ensuring that section I of DOD Form 2757 (refer to WP 005 00, Figure 2) accurately reflects the welder's identifying information and the welding parameters used for the test weld specimen.

c. Upon completion of the subject weld, the observing official will sign (and print) block 13 acknowledging that the welding procedures were performed in accordance with the specific WPS and this technical order.

7. **EXAMINING OFFICIAL.**

a. The examining official is responsible for all visual, radiographic, pressure and metallographic tests required for the applicable WPS.

b. The examining official may delegate actual weld inspection to qualified individuals for each required evaluation. Qualification requirements of inspection personnel shall be covered in the appropriate written instructions.

c. The examining official will enter SAT, UNSAT or NA appropriately in blocks 14 - 17 of section II of the DOD Form 2757 for each test.

d. Upon completion of the weld specimen evaluations, the examining official will complete the remaining information in block 18 and sign (and print) block 18, acknowledging that the tests were performed in accordance with this technical order.

(1) If the evaluation is performed by someone other than the Examining Official then that individual will enter SAT, UNSAT or NA appropriately in blocks 14 - 17 of section II of the DOD Form 2757 for each test.

(2) Upon completion of the weld specimen evaluations, the designated individual will complete the remaining information in blocks 18 and sign (and print) block 18, acknowledging that the tests were performed in accordance with this technical order.

e. For each metal group successfully completed, the examining official may enter appropriate information on the DOD Form 2758 and date/sign the authorized engineering lab signature line.

f. A copy of DOD Form 2757 will be kept on file as directed by their local policy for not less than 5 years with the original DOD Form 2757.

8. **WELDER'S SUPERVISOR.**

a. The welder's supervisor will review DOD Form 2757 and (if necessary) DOD Form 2758.

b. Upon completion of the weld specimen evaluations, the welder's supervisor will complete blocks 19 and 20, initial the qualified or not qualified block as applicable, and sign (and print) block 20a., acknowledging that the tests were performed in accordance with this technical order.

c. The welding supervisor shall verify that no personnel actions are pending that could disqualify the welder from certification.

d. If the welding tests were successful and DOD form 2758 is desired, the supervisor will date and sign the DOD Form 2758 on the weld instructor signature line and forward a complete package to the certifying official for final review.

e. If the test welds were unsuccessful, the supervisor will interview the welder to develop and recommend appropriate training/administrative actions.

f. The welder's supervisor is responsible for maintaining the completed DOD Form 2757 in the welder's training, personnel, or other readily accessible file. DOD Form 2758 may be carried by the welder or kept in a readily accessible file.

g. The welder's supervisor will ensure a current copy of DOD Form 2757 and/or DOD Form 2758 accompanies the welder on any deployments

9. **CERTIFYING OFFICIAL.**

a. The certifying official is responsible for reviewing the welder's complete package and assuring that DOD form 2757 is complete and that all facilities related to the weld test and evaluation are capable of compliance with this specification.

(1) The Certifying Official does not necessarily need to be a qualified welder but will represent the depot facility or the unit's MXG/Equivalent or designated representative.

b. The certifying official will sign block 21a. and date block 21b. of the DOD Form 2757 and sign the welding inspector line (if necessary) for the certifying activity on the DOD Form 2758.

c. For initial certification, unit commanders may consider formal presentation of the DOD Form 2758 to the metals technology technician in recognition of their accomplishment.

THIS PAGE INTENTIONALLY LEFT BLANK

ORGANIZATIONAL, INTERMEDIATE AND DEPOT MAINTENANCE

ARMY SPECIFIC WELDING CERTIFICATION REQUIREMENTS

Reference Material

None

Alphabetical Index

Subject **Page No.**

Army Aviation Unique Certification Requirements 2

Record of Applicable Technical Directives

None

NOTE

This entire Work Package Series contains **MANDATORY** information. Deviations are not permitted unless authorized by competent or cognizant authorities.

1. **ARMY AVIATION UNIQUE CERTIFICATION REQUIREMENTS.**

a. General.

(1) Army aviation has specific, established procedures and requirements that differ from the USN and USAF and are as follows:

(2) The Army aviation welders utilize both Navy, Air force, and Army schools and requirements. Army aviation welders certify in accordance with this section of this manual.

b. Certification Procedures.

(1) Use the forms described in Work Package 005 00, Figure 2 to document the certification process for each welder.

(2) Work Package 005 00, Figure 2, is the standard form issued by the designated welding certification laboratory that authorizes the individual certification.

(3) Work Package 005 00, Figure 3 represents the personnel certification card issued to all Army, Navy and Air Force aviation certified welders.

ORGANIZATIONAL, INTERMEDIATE AND DEPOT MAINTENANCE WELD EVALUATION

Reference Material

General Welding Certification Requirements ..... WP 005 00
Nondestructive Inspection Methods, Basic Theory ..... NAVAIR 01-1A-16
Nondestructive Inspection Methods, Basic Theory ..... T.M. 1-1500-335-23
Nondestructive Inspection Methods, Basic Theory ..... T.O. 33B-1-1
Radiological Affairs Support Program Manual ..... NAVSEA S0420-AA-RAD-010

Alphabetical Index

Subject	Page No.
Evaluation	2
General	2
Radiographic Inspection for the Purpose of Welder Certification	6
Film Evaluation	13
General	6
Inspection Equipment and Materials	8
Inspection Setup	8
Interpretation of Indications	15
Part Preparation	8
Visual Examination	2
Fillet Welds	6
Groove or Tube Welds	5

Record of Applicable Technical Directives

None

NOTE

This entire Work Package Series contains **MANDATORY** information. Deviations are not permitted unless authorized by competent or cognizant authorities.

1. **EVALUATION.**

2. **GENERAL.**

a. This section provides methods, procedures, and acceptance criteria for evaluation of welding qualification test welds.

b. The test weld shall be subjected to the examination and testing methods as indicated in Table 1.

Table 1. Examination and Testing

WPS NO.		VISUAL	MACROGRAPH[2]	RADIOGRAPH[2]	PRESSURE TEST
1-8 14-22 26-28 33-34	10-12 24 30 36-37	ALL[1]		X	
13 25 32 38	23 29 35	ALL	X		
9		ALL			X

NOTE:
1. All tubing and pipe less than 0.50” wall thickness does not require metallographic or bend testing.
2. Except WPS NO. 8 and 10.

c. If the base metal of a test weld is a substitution for specific base metals given in the Welding Procedure Specifications (WPS), written authority to use that metal substitution from cognizant material/metallurgical or welding engineer is required.

d. Required Examination and Testing by WPS (from WP 005 00, Table 3).

3. **VISUAL EXAMINATION.**

a. The length of weld to be examined shall be the entire length of the weld joint. Visual examination shall be at a minimum magnification of 3X for WPS 1 through 7, 9, 11 through 38; but magnification is not required for WPS 8 and 10.

NOTE

Cleaning between passes is permissible to ensure weld quality.

b. All welds will be evaluated in the as-welded condition. Grinding, filing, and other cosmetic modification of the final weld will be cause for specimen rejection.

c. Hand wire brush is permitted only for the SMAW and GMAW processes to remove welding smut. Power wire brushing is prohibited for all processes and metal groups.

d. External visual examination acceptance criteria shall be per Table 2.

Table 2. Material Thickness (Calculated)

DISCONTINUITY	0.016	0.020	0.032	0.040	0.050	0.063	0.125	0.250
Cracks	None	None	None	None	None	None	None	None
Overlap	None	None	None	None	None	None	None	None
Incomplete Fusion	None	None	None	None	None	None	None	None
Incomplete Penetration (Groove Weld Only)	None	None	None	None	None	None	None	None
SURFACE								
Individual Size (MIN) 0.25t or 0.030 in, Whichever is Less	0.004	0.005	0.008	0.010	0.013	0.016	0.030	0.030
Spacing (MIN)	8t the size of the Larger adjacent imperfection	8t the size of the Larger adjacent imperfection	8t the size of the Larger adjacent imperfection	8t the size of the Larger adjacent imperfection	8t the size of the Larger adjacent imperfection	8t the size of the Larger adjacent imperfection	8t the size of the Larger adjacent imperfection	8t the size of the Larger adjacent imperfection
Acc. Length 3 in (MAX) 1t or 0.12 in. Whichever is Less	0.016	0.020	0.032	0.040	0.050	0.063	0.120	0.120

Table 2. Material thickness (calculated) (cont)

DISCONTINUITY	0.016	0.020	0.032	0.040	0.050	0.063	0.125	0.250
SUBSURFACE / INCLUSIONS								
Individual Size (MIN) 0.33t or 0.060 in. Whichever is Less	0.005	0.007	0.011	0.013	0.017	0.021	0.041	0.060
Spacing (MIN)	4t the size of the larger adjacent imperfection	4t the size of the larger adjacent imperfection	4t the size of the larger adjacent imperfection	4t the size of the larger adjacent imperfection	4t the size of the larger adjacent imperfection	4t the size of the larger adjacent imperfection	4t the size of the larger adjacent imperfection	4t the size of the larger adjacent imperfection
Accu. Length 3 in (MAX) 1.33t or 0.24 in, Whichever is Less	0.021	0.027	0.043	0.053	0.067	0.084	0.166	0.240
UNDERCUT								
For Full Length of Weld - MAX Depth.	0.002	0.002	0.002	0.002	0.002	0.002	0.002	0.002
Individual Defect - MAX Depth	0.001	0.001	0.002	0.003	0.004	0.005	0.009	0.018
Accum. Length in any 3 in. of weld - MAX	0.2	0.2	0.2	0.2	0.2	0.2	0.2	0.2
UNDERFILL AND/OR CONCAVITY								
For Full Length of Weld - MAX Depth.	0.005	0.005	0.005	0.005	0.005	0.005	0.005	0.005
Individual Defect - MAX Depth	0.001	0.001	0.002	0.003	0.004	0.005	0.009	0.018
Accum. Length in any 3 in. of weld - MAX	0.2	0.2	0.2	0.2	0.2	0.2	0.2	0.2

Note: Based on AWS D17.1, Class A Inspection

4. **GROOVE OR TUBE WELDS.**

a. Groove welds which have any of the following defects, are unacceptable:

(1) Cracks – None.

(2) Incomplete joint penetration (i.e., there shall be a measurable root and face reinforcement apparent).

(3) Overlap – None.

(4) Undercut at any location in excess of 7% t or 0.030”, whichever is less.

(5) Underfill at any location in excess of 7% t or 0.030”, whichever is less.

(6) Mismatch at any location in excess of 33% of the base metal thickness.

(7) Reinforcement weld face or the weld root in excess of that shown in Table 3. Refer to Figure 1 for locations.

b. After radiographic inspection, section all tubes longitudinally to inspect penetration. This requirement does not apply to sheet metal weld specimens.

Table 3. Maximum Allowable Weld Reinforcement[1]

Base Metal Thickness (t, in.)	Weld Face		Weld Root	
	Base Metal Group	Any Location	Base Metal Group	Any Location
≤ 0.063	ALL	0.020 inch + t or 0.050 inch	IV and V	0.030 inch + t or 0.070 inch
			I, II, III, III, VI, and VII	0.020 inch + t or 0.050 inch
> 0.063	ALL	0.80 t or 0.25 inch	IV and V	t or 0.250 inch
			I, II, III, VI, and VII	0.8 t or 0.25 inch

NOTES:
1. The applicable maximum is the smaller of the two values.

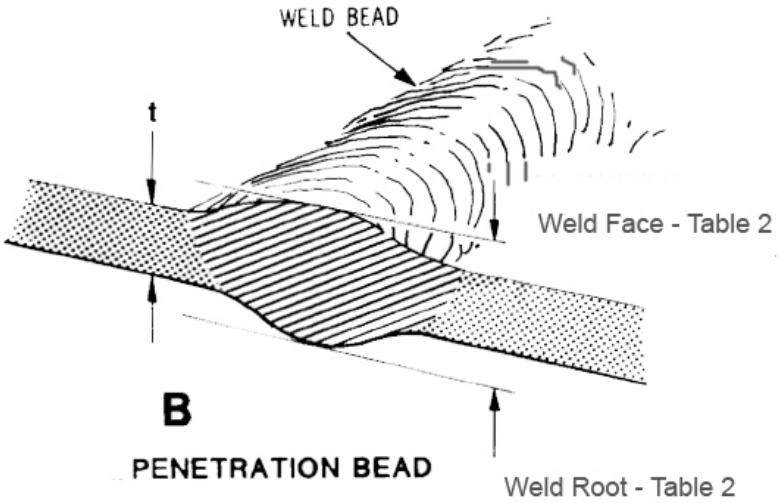

Figure 1. Weld Reinforcement

5. **Fillet Welds.**

a. Fillet welds, which have any of the following defects, are unacceptable, except as shown in figure 2 and Figure 3:

(1) Cracks – None.

(2) Incomplete joint penetration (i.e., there shall be a measurable root and face reinforcement apparent).

(3) Underfill at any location in excess of 7% t or 0.030”, whichever is less.

(4) Overlap – None.

(5) Undercut at any location in excess of 7% t or 0.030”, whichever is less.

(6) Melt-through (burn-through) is evaluated on fillet welds in sheet equal to or less than 0.063 inch in thickness. The weld metal opposite the weld bead and extending more than "t" beyond the sheet/tube surface at any cross-section is unacceptable.

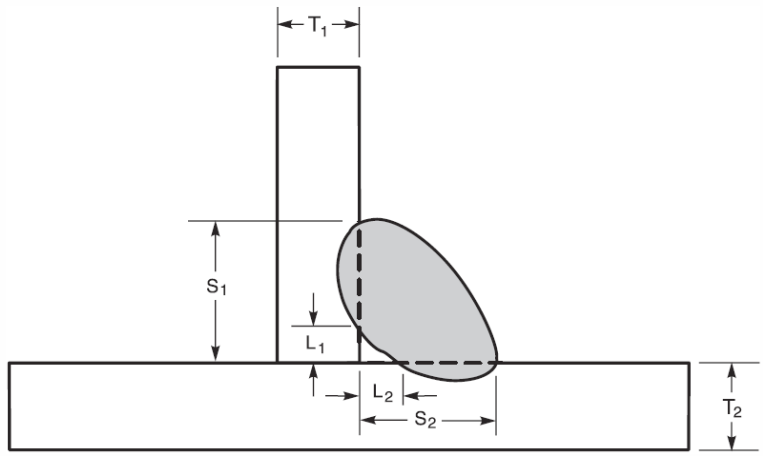

Legend:

L_1 = Measured incomplete fusion at the root in the vertical member.
L_2 = Measure incomplete fusion at the root in the horizontal member.
S_1 = Measured leg size in the vertical member.
S_2 = Measured leg in the horizontal member.

General Notes:

When thickness (T_1 or T_2) of any member is ≤0.063 in., L_1 shall be ≤0.1 X S_1 and/or L_2 shall be ≤0.1 x S_2.

Figure 2. Fillet Acceptance Criteria ≤ 0.063 inch

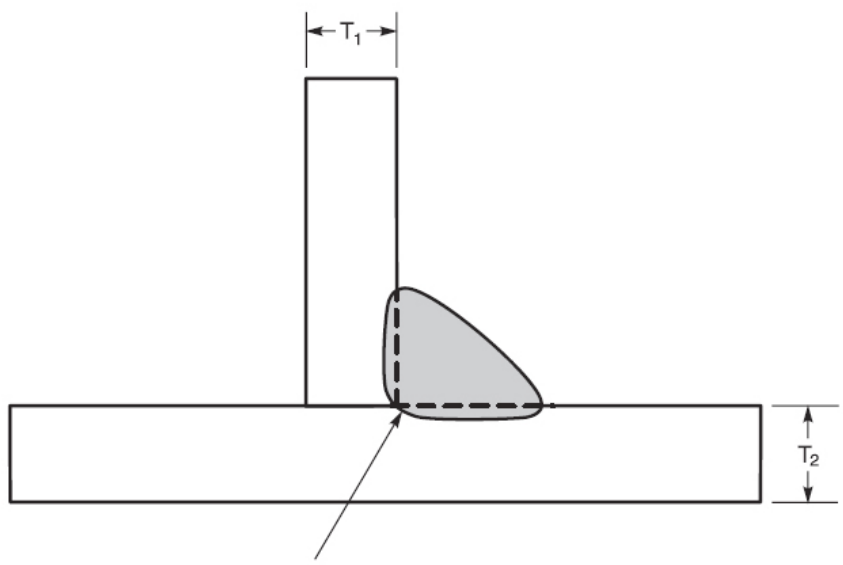

General Notes:

- When thickness of both members (T_1 and T_2) is >0.063 in. (1.6 mm), there shall be an evidence of melting and fusing of both members at the corner and weld metal penetration beyond the junction of two members.
- When thickness of either member (T_1 or T_2) is ≤0.063 in. (1.6 mm),

Figure 3. Fillet Weld Acceptance > 0.063 inch

6. **RADIOGRAPHIC INSPECTION FOR THE PURPOSES OF WELDER CERTIFICATION.**

NOTE

NAVY/MARINE CORPS SPECIFIC: All radiological operations conducted in support of this General Series Manual must comply with the RADIOLOGICAL AFFAIRS SUPPORT PROGRAM MANUAL, NAVSEA S0420-AA-RAD-010.

AIR FORCE/ARMY SPECIFC: All radiological operations conducted in support of this manual shall comply with T.O. 33B-1-1/ T.M. 1-1500-335-23, NONDESTRUCTIVE INSPECTION METHODS, BASIC THEORY

See SUPP D

7. **GENERAL**. Radiographic inspection shall be performed in accordance with ASTM E1742, NA 01-1A-16 and T.O. 33B-1-1, as appropriate with each Service requirements.

8. **PART PREPARATION**. Wipe inspection area with an approved solvent.

WARNING

RADIATION HAZARD

X-Ray Radiation is harmful to personnel. Ensure compliance with all applicable Service Specific safety precautions set forth in S0420-AA-RAD-010, T.O. 33B-1-1, or T.M. 1-1500-335-23, as applicable.

Failure to comply may result in injury to personnel.

9. **INSPECTION EQUIPMENT AND MATERIALS.**

a. A minimum of 150 KVP x-ray system.

b. Penetrameter for material (ASTM E1742). Refer to Table 4.

c. Shims equaling total thickness of weld buildup placed on one (1) wall of tube.

d. Lead identification materials.

e. Lead cover plates are needed if multiple shots are to appear on one sheet of film. Recommend two plates, each 8” x 8” x 0.25”.

f. Eastman Kodak Co. Industrex Type M-8 Ready Pack and Lead Pack Film, or equivalent. Sheets of film 5” x 7” are preferred.

10. **INSPECTION SETUP.**

a. Tube butt joint welds.

(1) Mark 1.0” tube circumference for double wall inspection in two shots, each centered 90° from the previous (see Figure 4). Butt joint sheets are shot in single shot.

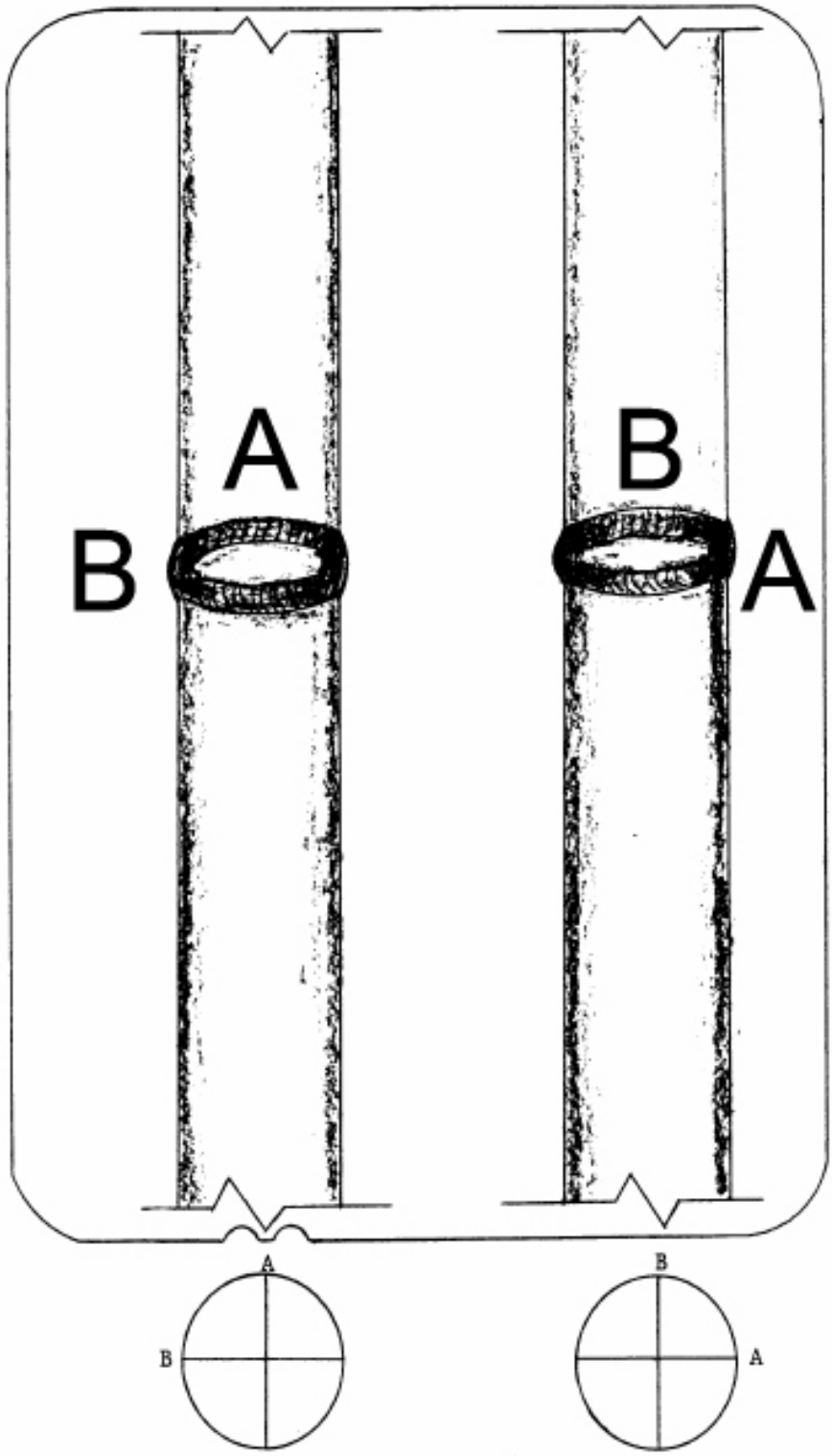

Figure 4. Location of Tube Film for Each Shot

(2) Use lead identification materials to identify each film to be traceable to the welder's name, date welded, joint type, base metal, inspector's name, date inspected.

(3) Arrange tube head, welded sample, film, Penetrameter, and shims per Figure 5.

(4) For the 1.0" tube, having both shots on one sheet of film is preferred. Smaller and separate sheets of film may be used. The welded tube shall be rotated 90° between shots. When using a single sheet of film for both shots, lead plates shall be used to cover the film, so only the area directly under the welded tube is exposed.

(5) The settings shown in Table 4 for tubes are recommended. Deviation from these settings may be necessary to obtain the required film density and image of the Penetrameter hole.

b. Sheet Groove Welds.

(1) Use lead identification materials to identify each film to be traceable to the welder's name, date welded, joint type, base metal, inspector's name, date inspected, or equivalent identification marking.

(2) Arrange tube head at a 90-degree angle from welded sample, film, Penetrameter, and shims.

(3) For the sheet groove welds, multiple similar weld samples may be shot simultaneously (Refer to Figure 6) as long as source distance and angle remain the same. The welded sheet groove shall be 90° from tube head.

(4) The settings shown in Tables 4 and 5 for sheet are recommended. Deviation from these settings may be necessary to obtain the required film density and image of the Penetrameter hole.

11. **FILM EVALUATION.**

a. Image quality shall be 2-1T for all exposures.

b. Film density in the Penetrameter image and the weld fusion zone shall be 2.0 – 3.0. Density measurements of the Penetrameter image shall be taken around the T-hole closest to the weld.

c. Compare weld defects identified on the film to radiographic requirements. The typical image will appear as shown in Figure 7.

d. MARKING. Identify defects on the film, which are cause for rejection.

e. RECORDS. If certification is approved, radiographs shall be maintained until replaced by the next certification cycle. If certification is disapproved, radiographs shall be maintained until individual passes certification or one (1) year, whichever comes first.

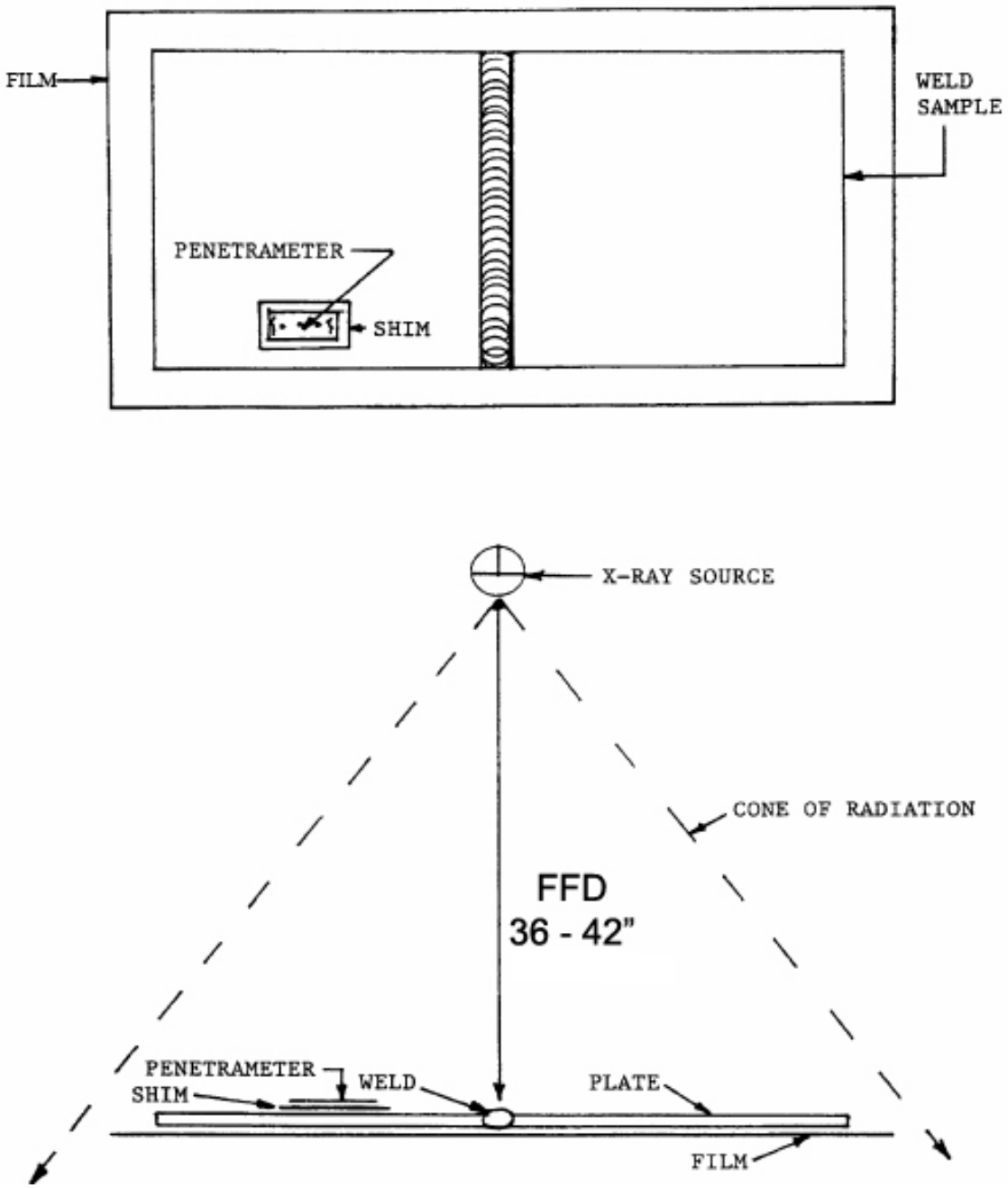

Figure 5. Exposure Setup

Table 4. Recommended Inspection Settings

MATERIAL	MATERIAL THICKNESS	KV	MAM[1]	IQI[2]	FILM
Steel Tube	1.0”/0.050” thick tube	120	16.9	FE .25	5 x 7 M-8Pb
Stainless Steel Tube	1.0”/0.050” thick tube	120	16.9	SS .25	5 x 7 M-8Pb
Inconel Tube	1.0”/0.050” thick tube	130	16.9	IN .25	5 x 7 M-8Pb
Aluminum Tube	1.0”/0.050” thick tube	50	16.9	AL .25	5 x 7 M-8
Magnesium Tube	1.0”/0.050” thick tube	40	22.5	MG .25	5 x 7 M-8
Titanium Tube	1.0”/0.050” thick tube	90	16.9	TI .25	5 x 7 M-8
Cobalt Tube	1.0”/0.050” thick tube	140	33.8	IN .25	5 x 7 M-8Pb
Steel Sheet	0.250” thick sheet	150	50.6	FE .43	5 x 7 M-8Pb
Steel Sheet	0.032” thick sheet	120	8.3	FE .25	5 x 7 M Pb
Steel Sheet	0.125” thick sheet	120	20.0	FE .25	5 x 7 M Pb
Stainless Steel Sheet	0.020” thick sheet	120	5.8	SS .25	5 x 7 M Pb
Stainless Steel Sheet	0.032” thick sheet	120	8.3	SS .25	5 x 7 M Pb
Stainless Steel Sheet	0.125” thick sheet	120	20.0	SS .25	5 x 7 M Pb
Inconel Sheet	0.020” thick sheet	120	7.9	IN .25	5 x 7 M Pb
Inconel Sheet	0.040” thick sheet	120	11.7	IN .25	5 x 7 M Pb
Inconel Sheet	0.125” thick sheet	130	20.0	IN .25	5 x 7 M Pb
Aluminum Sheet	0.020” thick sheet	50	7.0	AL .25	5 x 7 M
Aluminum Sheet	0.032” thick sheet	50	10.0	AL .25	5 x 7 M
Aluminum Sheet	0.125” thick sheet	50	19.0	AL .25	5 x 7 M
Magnesium Sheet	0.032” thick sheet	40	10.0	MG .25	5 x 7 M
Magnesium Sheet	0.125” thick sheet	40	19.0	MG .25	5 x 7 M
Titanium Sheet	0.020” thick sheet	90	7.0	TI .25	5 x 7 M Pb
Titanium Sheet	0.040” thick sheet	90	11.7	TI .25	5 x 7 M Pb
Titanium Sheet	0.125” thick sheet	90	20.0	TI .25	5 x 7 M Pb
Cobalt Sheet	0.016” thick sheet	120	20.0	IN .25	5 x 7 M Pb

[1] Milliamps minute (MAM)
[2] Image Quality Indicator (IQI)

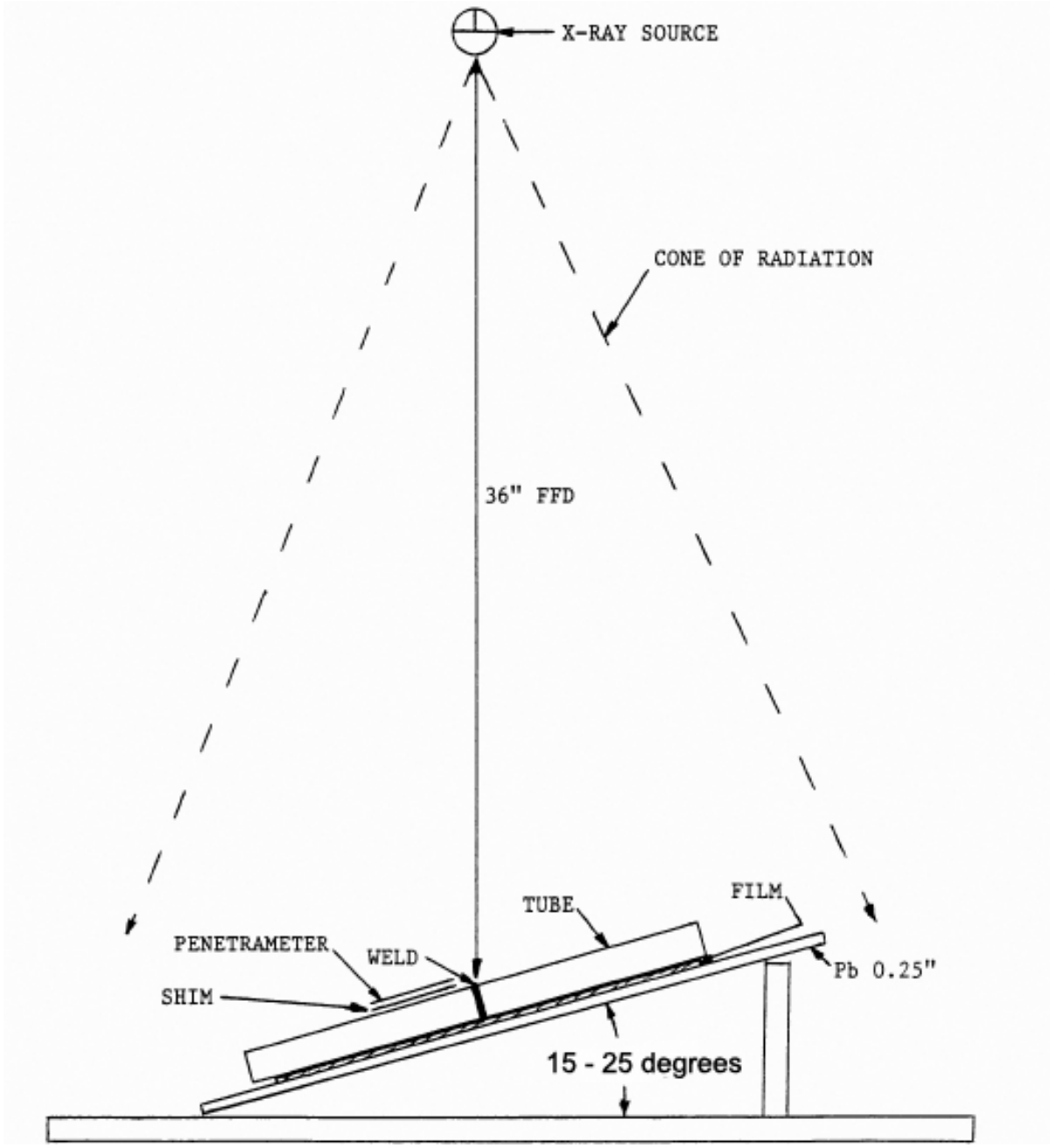

Figure 6. Exposure Setup – 1" Tube

Table 5. Recommended Inspection Settings for Groove Welds

SHEET MATERIAL	SHEET THICKNESS (IN)	KV/MA	TIME (MIN:SEC)	FFD (IN)	FILM
GROUP I					
Steel	.032	120/4	1:00	42	80
	.063	120/4	1:30	42	80
	.125	150/4	3:00	36	50 Pb w/o backing plate
	.250	150/4	5:00	36	50 Pb w/o backing plate
GROUP II					
Stainless Steel	.032	100/4	1:00	42	80
	.063	120/4	1:50	42	80
	.125	120/4	3:00	42	80
A286	.032	110/4	1:10	42	80
	.063	120/4	2:00	42	80
GROUP III					
Inconel 718	.032	130/4	0:40	42	80
	.063	130/4	1:00	42	80
	.032	130/4	1:00	42	80
	.063	130/4	1:30	42	80
RENE	.032	130/4	1:00	42	80
	.063	130/4	1:30	42	80
GROUP IV					
Aluminum	.032	70/4	0:20	42	80
	.063	70/4	0:30	42	80
	.250	110/4	0.35	42	50 Pb
GROUP V					
Magnesium	.032	70/4	0:35	42	80
	.063	70/4	0:45	42	80
GROUP VI					
Titanium	.032	100/4	0:35	42	80
	.063	110/4	0:50	42	80
GROUP VII					
Cobalt	.032	130/4	3:00	42	80
	.063	130/4	1:15	42	80

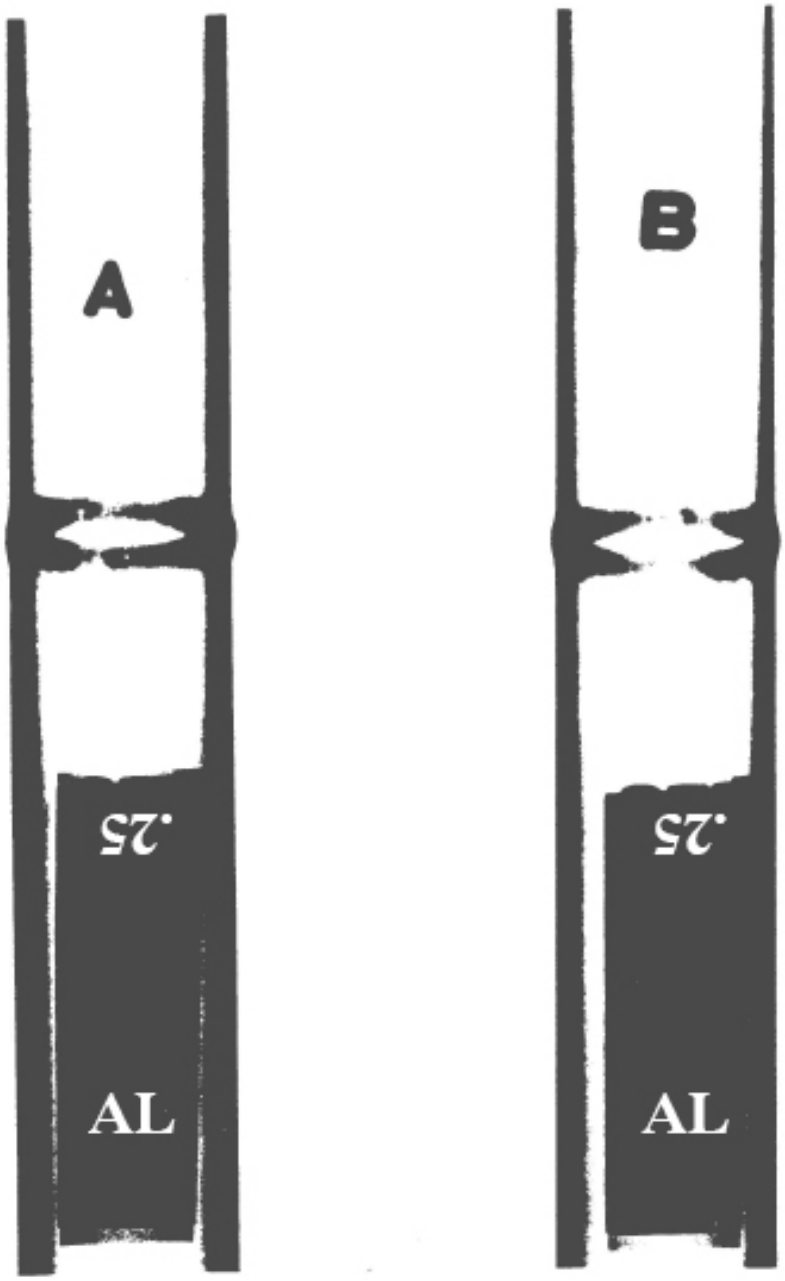

Figure 7. Typical Layout of Radiographic Image

12. **INTERPRETATION OF INDICATIONS.**

a. Weld length.

(1) The center four-inch length of weld in sheets of equal to or less than 0.063 inch thickness.

(2) Center six-inch length of welds in sheet more than 0.063 inch in thickness.

(3) Entire weld in tubes.

b. A linear indication is defined as one whose maximum dimension is more than three times its minimum dimension.

c. Nonlinear indications with major and minor dimensions shall be evaluated as an equivalent circle with estimated average diameter. This estimated diameter shall be the size used in determining the acceptability of the indication and area corresponding to the estimated diameter shall be used in calculating the area of an indication.

d. Tungsten inclusions shall be counted as porosity.

e. In a test weld with a base metal thickness of equal to or less than 0.063”, disregard all indications of less than 0.002 inch size. In a test weld with a base metal thickness of more than 0.063”, disregard all indications of less than 0.005”, or 0.02T in size, whichever is greater.

f. Unacceptable Indications. Test welds, whose radiograph of the inspected length shows any of the following indications, are unacceptable:

- Any type of crack.
- Incomplete joint penetration, except as indicated in Table 2.
- Internal linear indications in excess of those shown in Table 2.
- Porosity in excess of that shown in Table 2.

ORGANIZATIONAL, INTERMEDIATE AND DEPOT MAINTENANCE

PREWELD OPERATIONS

Reference Material

None

Alphabetical Index

Subject **Page No.**

Additional Methods of Cleaning 3
Common Methods for Preweld Cleaning 2
Joint preparation 2
Purpose 2

Record of Applicable Technical Directives

None

NOTE

This Work Package contains GUIDANCE information to supplement higher order technical document or instructions.

1. **PURPOSE.**

a. Prior to all welding operations the base metal, whether new wrought or cast metal or existing components must have the surface cleaned. A clean surface ensures that contaminants do not exist and become part of the weld metal forming porosity and inclusions, or prevent the wetting of the weld metal to the base metal.

b. Depending on the technical manual information, cleaning is not always written in a clean or concise manner and it is incumbent upon the welder to ensure the base metal is cleaned. Verify that the intended weld zones and adjacent surfaces are free of contaminants which could become part of the weld.

(1) Verify that high metal is fully removed from deburring by wiping a lint-free cloth of the surface without 'catching' the cloth on the weld zone.

(2) Verify cleanliness after wiping with approved solvents, preferably acetone, until the lint-free cloth no longer shows evidence of dirt or smut.

c. Welding requires a higher degree of cleanliness and as such, most technical manuals do not address the specific needs for pre-weld cleaning. This work package series describes various cleaning methods and engineering concurrence maybe necessary for application.

d. Each base metal group requires different cleaning methods and may not be interchanged without approval. Refer to the component technical manual for specifics of cleaning the base metal prior to welding.

2. COMMON METHODS FOR PREWELD CLEANING

a. Blasting. Generally used for the removal of paints and primers an should be considered as a non-aggressive surface preparation methods, except when aluminum oxide or glass bead is employed.

b. Solvents. Used for the removal of grease, oils, fingerprints, such as acetone.

c. Acids. A mild surface preparation which is intended to remove oxidation from the metal. Welding should occur at a predetermined time before the oxides have reformed on the metal surface.

d. Mechanical. The most aggressive method and the most common method. This method should be employed after all other surface preparation methods have been employed and the surface has not sufficiently been cleaned of paints, primers, and oxidation.

3. JOINT PREPARATION

a. After cleaning the weld surfaces, whether for initial fabrication or for repairs of cracks, the preparation of the weld joint requires the same scrutiny of cleanliness. Weld cracks, in particular, still harbor residual debris of paint, primer, and oxidation, or hydrocarbons.

b. Complete removal of cracks is desired in most cases and employing the correct or appropriate tools, the intent is for weld surfaces which are as clean as the adjacent surfaces; free of deleterious debris hindering weld penetration and flow.

c. All weld joint tools, such as rotary burrs, sanding disks, or wire brushes shall be identified for each metal group and not used for other metal groups.

For example:

> Wire brushes or carbide rotary burr/bits used for carbon and alloy steels shall **never** be used on surfaces of titanium, aluminum or stainless steel. The cross contamination may introduce particles which promote corrosion.

4. ADDITIONAL METHODS OF CLEANING

a. This work package series is intended to provide general information and purpose about cleaning and weld joint preparation. Consult with the component technical manual for specific information regarding approved preparation methods.

THIS PAGE INTENTIONALLY LEFT BLANK

ORGANIZATIONAL, INTERMEDIATE AND DEPOT MAINTENANCE

SURFACE PREPARATION FOR WELDING

Reference Material

Aircraft Weapons Systems Cleaning and Corrosion Control ..... NAVAIR 01-1A-509

Alphabetical Index

Subject **Page No.**

General 2
Preweld Base Metal Cleaning Specifics 2
Preweld Filler Metal Cleaning Specifics 3
Generic Cleaning Methods 3
Degreasing 3
Dry Abrasive (Grit) Blasting 4
Dry Abrasive (Shell) Blasting 5
Steam Cleaning 3
Wet Abrasive (Grit) Blasting, Type 1 5
Generic Cleaning of Metal Groups 6
Cleaning Carbon Steel 6
Cleaning of Aluminum and Magnesium (Al / Mg) 7
Cleaning of Stainless Steel, Nickel and Cobalt Alloys 7
Cleaning of Titanium Alloys 8
Generic Mechanical Cleaning Methods 10
Mechanical Removal 10
Solvent Wiping 10

Record of Applicable Technical Directives

None

NOTE

This Work Package contains GUIDANCE information to supplement higher order technical document or instructions.

NOTE

The following information in this work package is intended to provide guidance and consideration to evaluate acceptable pre-weld cleaning methods of various aviation base metals. Consult the component technical manual prior to welding to ensure the properly defined cleaning methods are employed.

1. **GENERAL.**

a. Ensuring a quality weld, the most important and probably the most overlooked aspect of welding is the pre-weld cleaning methods. The general rule-of-thumb will dictate that base metal shall be cleaned at least 1/2 inch from the intended weld zone. These surfaces must be completely cleansed of all hydrocarbon and other contaminants, such as cutting fluids, grease, oil, waxes and primers, by suitable solvents.

Acceptable pre-weld cleaning techniques include the following:

- Stainless steel wire brushes that have not been used for any other purpose;
- Blasting with non-ferrous sand or grit;
- Machining and grinding using a suitable tool and chloride-free cutting fluid; and
- Pickling with acid solutions, depending on base metal.

b. All surfaces to be welded and surfaces that may affect quality of the resulting weld (ex. Welding filler materials and fixtures) shall be free from slag, surface oxides, scale, protective finishes, oils, grease, dirt, or other contaminants.

c. Chemical methods (ex. Alkaline cleaning, solvent wipe, or etching) or Mechanical methods (ex. Wire brushing, scraping, abrasive blasting, or machining) shall be used before welding, as needed.

d. Previously cleaned surfaces shall be protected from contamination. If contamination is suspected, the surface shall be cleaned again.

e. All workspaces, fixtures, backing bars or chill rings shall be cleaned and free of contaminants that may come in contact with the part being welded. Backing bars or chill rings shall be cleaned based on the base metal type and wiped with acetone prior to affixing or mounting to the weld zone.

2. **PREWELD BASE METAL CLEANING SPECIFICS.**

a. Joints. Thorough cleaning of joints and filler metal immediately before welding is imperative, or weld contamination can occur. Previously cleaned or machined surfaces should be wiped with a non-chlorinated solvent, such as acetone. Acetone is flammable and require good ventilation; therefore, proper precautions should be taken.

b. Chlorinated solvents should never be used for cleaning; their residues may lead to cracking in the weld and heat-affected zone.

c. Once the weld joint has been cleaned, it should be kept free of contamination, including fingerprints, until welding begins. Wrapping the joint in clean, dry, lint-free cloth or paper and handling the parts with white gloves are good practices.

3. **PREWELD FILLER METAL CLEANING SPECIFICS.**

a. Filler Metal. Welding filler metal rod should be clean and bright. To insure cleanliness, the filler metal rod should be wiped immediately before use with a clean cloth saturated with a nonchlorinated solvent such as acetone and then thoroughly dried with a clean, lint-free cloth.

b. Acetone is flammable and requires good ventilation; therefore, proper precautions should be taken.

c. Welding filler metal rod once removed from its container should not be returned to the container without being cleaned again. The container should be properly marked.

4. **GENERIC CLEANING METHODS.**

a. The following cleaning methods are proven generic cleaning methods and may or may not be applicable for cleaning in all instance.

b. refer to the component repair manual for the properly prescribed cleaning methods.

c. If the component repair manual does not sufficiently prescribe a preweld cleaning method, secure concurrence from the proper engineering support group prior to application.

CAUTION

Do not degrease titanium or titanium parts, bearings, rubber or plastic parts which can be attacked by organic solvents.

5. **DEGREASING.** Degreasing is a cleaning method designed to remove oil, grease and preservative compounds from metal. The part is immersed in the solution so that the grease, oil and preservative compounds are carried away. Consult with NAVAIR 01-1A-509 general series manual for additional information related to cleaning of components or base metals prior to welding.

6. **STEAM CLEANING.** Steam cleaning is a superficial cleaning process that is used primarily when it is not desirable to re-move paint and surface coatings from ferrous and nonferrous jet engine parts. To clean properly with steam it is necessary to add a cleaning compound. Do not steam clean oil impregnated parts.

NOTE

Contact the local safety and health entity for permission and safety procedures.

a. Preparation of Compounds.

WARNING

Wear rubber gloves, an apron and face shield while steam cleaning. When using a liquid or powder, follow manufacturer's instructions.

NOTE

For best results, the steam valve should be opened only enough to produce a wet spray with high impact upon the surface being cleaned.

b. Procedure. Set the steam valve to the strength and force required for the cleaning job at hand. Hold the steam gun about 12 inches from the part and at about a 45-degree angle to the surface being cleaned. After steam cleaning, parts should be given a final rinse with clear water to remove any residue of cleaning compound, and be thoroughly dried. When rust protection is needed, it should be applied immediately after drying.

7. **DRY ABRASIVE (GRIT) BLASTING.** Dry abrasive blast can be used for the removal of heat scale, carbon deposits, corrosion and rust on critical parts where slow cutting action is desired, and for paint and thermal sprayed coating surface preparations, where limited cutting action is desired.

a. Material and Equipment. A standard type of Dry Blast Cabinet and shop compressed air supply is all the equipment required.

NOTE

The type and size of the abrasive may vary for different parts. Refer to the applicable manual to determine the type and size of the abrasive material required for that part.

b. Procedure.

WARNING

Grit blast equipment used for titanium or magnesium should be cleaned regularly to prevent accumulation of metal dust which could create a fire hazard.

CAUTION

Dry abrasive blasting shall never be used to clean titanium or magnesium parts or alloys of either material, unless specifically directed by the maintenance manual. Avoid excessive blasting. Perform the cleaning operation so that the blast will not dwell in one spot. The blast shall be directed at an angle so as to sweep across the surface, not perpendicular to it.

(1) Mask all plated or machined surfaces and other areas to protect them from abrasive blast and cover all parts, pockets, cavities, hoses, and tubes to prevent entry of abrasive which may be difficult to detect and remove after cleaning.

(2) Grit-blast parts only to the extent necessary to obtain a uniformly clean surface on all exposed areas. Unless otherwise specified in the applicable engine manual, use 120 or 220 mesh aluminum oxide grit. The recommended air pressure is 25-90 psi with the nozzle held at a distance of 5-8 inches from the part.

(3) Blow all residual grit from the part, using clean, dry, compressed air.

(4) After blasting, visually inspect the part thoroughly to insure that no abrasive material is trapped in cavities.

8. **DRY ABRASIVE (SHELL) BLASTING.**

a. Dry abrasive blasting, using crushed shells as the abrasive medium, is an effective method of cleaning light scale or carbon deposits, corrosion and rust from parts where slow cutting action is desired.

NOTE

The type and size of abrasive may be different for some parts. Type and size will be specified in the maintenance or overhaul manual.

(1) Materials and Equipment.

(a) Use a mixture of 50% crushed walnut shells and 50% rice hulls, unless otherwise specified in the applicable maintenance or overhaul manual.

(b) A standard type of dry blast cabinet with a gun nozzle size of 1/4 inch should be used.

(2) Procedure.

(a) Mask all parts that are to be grit-blasted to protect plated or coated finishes or machined surfaces and to keep abrasives from entering cavities, pockets, tubes, hoses or manifolds from which grit may be difficult to detect and remove after blasting.

(b) Clean all exposed surfaces of the parts, using a mixture of 50 percent crushed walnut shells and 50 percent rice hulls. Mixtures are by volume in accordance with the following recommendations:

- Recommended distance of gun from part is 10-12 inches. Keep the gun at least 8 inches away from part.
- Air pressure: 80-100 psi.

(c) Perform the cleaning operation so that the grit blast does not dwell in one spot. The most effective method is to direct the blast stream at an angle across the surface being cleaned.

(d) Inspect to make sure that no abrasive is trapped in the part.

9. **WET ABRASIVE (GRIT) BLASTING, TYPE 1.**

a. General. Wet abrasive blast is an effective method of removing heat scale, carbon deposits, rust, and temporary markings from metal parts, and for producing a uniform satin finish on parts having simple or complex shapes. This type of blasting does not remove metal rapidly; hence surfaces can be refinished without changing dimensions significantly. Mating surfaces after wet abrasive blasting are less likely to shift during assembly.

NOTE

The type and size of abrasive may be different for some parts. Type and size will be specified in the applicable engine manual.

b. Procedure.

(1) Mask all identification markings and other areas as required. No other masking is necessary.

CAUTION

Do not permit the blast stream to dwell in one spot; this will cause excessive removal of metal. Direct the blast to sweep across the surface at an angle, not perpendicular to it. If turbine disks and spacers are blasted, direct the blast radially outward across the surface to avoid blasting the dovetails.

(2) Using grits of 500 mesh or larger may cause plugging of small holes and internal passages found in such parts as turbine buckets and vanes. Once parts are plugged, it is practically impossible to clean them out.

(3) Wet blast the exposed surface of parts using the slurry mixture. Use an air pressure of approximately 60-90 psi for applying the wet abrasive.

(4) Immediately following the abrasive blasting, pressure-rinse the parts with hot water, making sure that no abrasive is trapped in any cavities. Dry, using clean, dry, shop air.

(5) Visually inspect to determine adequacy of cleaning and uniformity of surface finish.

(6) Apply rust preventive as necessary.

10. **GENERIC CLEANING OF METAL GROUPS.**

11. **CLEANING CARBON STEEL.**

NOTE

Acetone wipe all metals prior to welding.

a. Prior to cleaning carbon and alloy steels for welding, ensure the weld surfaces are thoroughly cleaned of bulk compounds and loose oxides.

b. **GENERIC CLEANING STEPS**:

- Degrease weld zone or the complete part using approved alkaline detergent.
- Brush weld zone thoroughly using a stainless steel wire or nylon bristle brush as needed.
- Rinse thoroughly with fresh water.
- Dry using clean, oil-free, compressed air.
- Apply CPC as needed.

12. **CLEANING OF ALUMINUM AND MAGNESIUM (AL / MG).**

NOTE

Acetone wipe all metals prior to welding.

a. Proper cleaning is often an important factor that controls the final results of a welding operation. This is especially true when welding with oxyacetylene, oxy-hydrogen or other types of gas and spot welding (resistance welding).

CAUTION

Check with the local health and safety entity for permission and procedures to use these toxic/hazardous materials.

b. The degreasing operation will remove the oil/ grease and dirt but it has no effect on the oxide film. To remove the oxide film, parts should be cleaned on both sides of the area to be welded with a synthetic scouring pad. Parts shall be immersed for twenty (20) minutes in a corrosion removing compound MIL-C-10578, Ty II Metal Conditioner (phosphoric acid based) until surface shows no water break and then rinsed with tap water.

c. Welding shall be accomplished immediately after deoxidizing and no later than 12 hours after the deoxidizing operation.

d. The chemical cleaning operation shall be precisely timed since over or under application time will increase the contact resistance and any chemical that will remove the oxide will also attack the aluminum.

e. **GENERIC CLEANING STEPS**:

- Degrease using approved alkaline detergent.
- Brush using a stainless steel wire or nylon bristle brush as needed.
- Rinse thoroughly with fresh water.
- Dry using clean, oil-free, compressed air.

13. **CLEANING OF STAINLESS STEEL, NICKEL AND COBALT ALLOYS.**

NOTE

Acetone wipe all metal surfaces prior to welding.

a. Cleaning may be necessary before welding and during welding (interpass) and is usually essential after welding in order to ensure maximum corrosion resistance.

b. Pre-weld cleaning involves dressing the cut edge and removing all contaminants such as oil, paint, grease, crayon marks, adhesive tapes, etc. The area on both sides of weld should be cleaned before welding by brushing with a clean stainless steel brush and wiped with a solvent moistened cloth.

c. **GENERIC CLEANING STEPS**:

- Degrease using approved alkaline detergent.
- To remove baked-on carbon deposit/heat scale, immerse in alkaline descaler solution, A-A-59260 or equivalent.
- Rinse thoroughly with fresh water.
- Dry using clean, oil-free, compressed air.

14. CLEANING OF TITANIUM ALLOYS

NOTE

Acetone wipe all metal surfaces prior to welding.

a. The sensitivity of titanium and titanium alloys to embrittlement, impose limitations on the joining processes that may be used. Small amounts of carbon, oxygen, nitrogen, or hydrogen impair ductility and toughness of titanium and titanium alloy. Consequently, joining processes and procedures that minimize joint contamination must be used. Dirt, dust, grease, fingerprints, and a wide variety of other contaminants can also lead to embrittlement and porosity when the titanium or filler metal is not properly cleaned prior to welding.

b. All weldments of titanium and titanium alloys shall be cleaned prior to welding. The following is an outline of the cleaning procedure.

WARNING

The following cleaning solutions are extremely hazardous. Use the proper hand, face, arm and body protection devices that will protect against organic solvents, caustic and acidic solutions. Refer to the local Safety and Health Office for guidelines.

c. **TITANIUM CLEANING**. Figure 1 outlines the cleaning procedures for titanium. Table 1 is a list of required chemicals for this operation. The procedures include:

(1) Degreasing. Do not use halogenated solvents to degrease titanium. Halogens (chlorine, fluorine) can cause embrittlement.

(2) Detergent Clean. Clean the solvent residue using a mild soap solution (1 oz./gal.) in cold water.

(3) Scale Conditioning. Immerse in a cold solution of alkaline de-ruster at 8 to 12 oz./gallon for 10 to 60 minutes.

(4) Rinse. Rinse in de-ionized water.

(5) De-scale. Immerse in a solution of 30% nitric acid and 1% hydrofluoric acid for 1/2 to 1-1/2 minutes.

(6) Rinse. Rinse in de-ionized water.

(7) Inspect for cleanliness. If not clean, proceed to subparagraph (8).

(8) Scale Conditioning. Immerse in a hot (230°F) solution of 50% sodium hydroxide and 1% copper sulfate for 30 to 60 minutes. Repeat steps (4) through (7).

(9) Final Rinse. Rinse in de-ionized water.

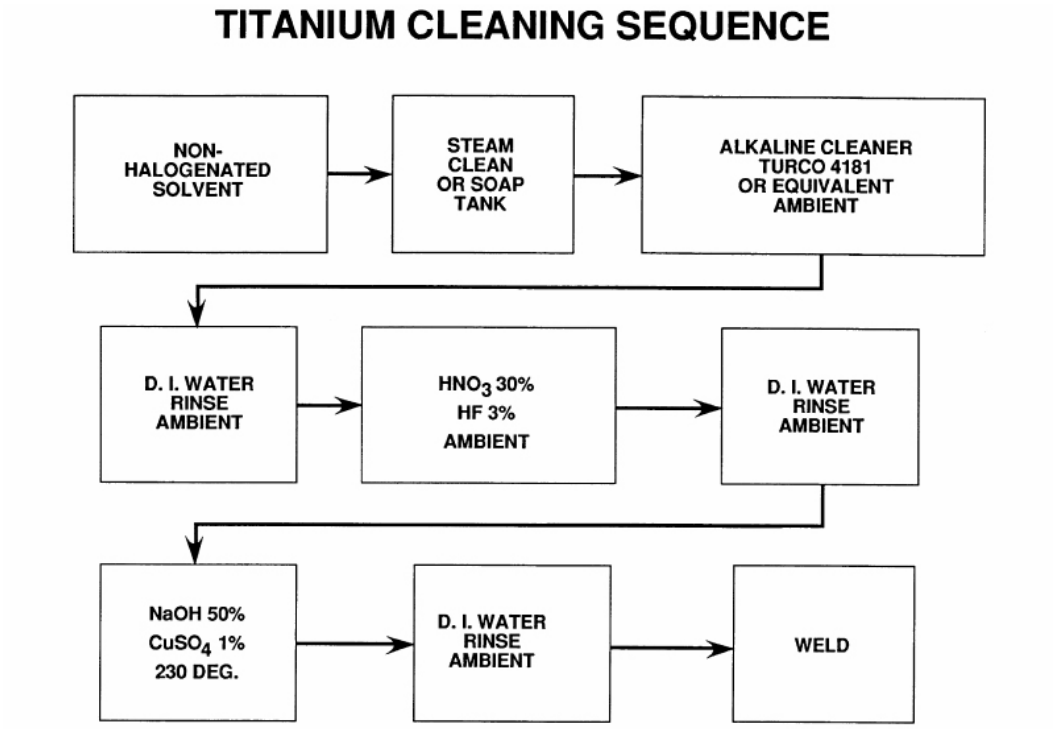

Figure 1. Titanium Cleaning Sequence

Table 1. Titanium Cleaning Materials

NOMENCLATURE	NATIONAL/LOCAL STOCK NUMBER	UNIT-ISSUE	UNIT SIZE
Nitric Acid A-A-59105 HNO_3	00-236-5670	CO	6 1/2 gal
Hydrofluoric Acid MIL-A-24641 HF	00-236-5671	CO	5 gal
Copper II Sulfate or Cupric Sulfate B602 $CuSO_4$	00-236-5680	DR	100 lb
Alkaline Cleaner* Turco 4181	N/A	CO	125 lb
Sodium Hydroxide ASTM D456 NaOH	00-270-8177	CO	500 gm
	00-174-6581	DR	100 lb

* Diluted (Low concentration)

d. All titanium and titanium alloys, shall be placed in clean polyethylene bags LP-378, MIL-P-22191, or MIL-B-121 Grade ”A” (Barrier paper) immediately after cleaning.

e. Parts being removed from sealed containers, after cleaning and for welding shall be handled with clean (lint free) white gloves. Gloves used for handling titanium shall not be used for handling tools and other equipment.

(1) If parts have been in storage (sealed) more than seven days re-cleaning may be required.

(2) Parts that have been sheared shall have the sheared edges mechanically cleaned prior to the cleaning operation of **TITANIUM CLEANING**.

f. Immediately prior to loading fixtures (open air or chamber) weldments shall have the faying edges wiped (degreased) with a clean isopropyl alcohol moist cloth (lint free) or other approved solvent.

g. Tooling that comes in contact with parts, in the weld zone shall be free of oxides, and cleaned by wiping with a cloth (lint free) moistened with isopropyl alcohol prior to use.

15. **GENERIC MECHANICAL CLEANING METHODS.**

16. **MECHANICAL REMOVAL.**

NOTE

Do not over apply the mechanical cleaning. Application should be controlled and applied only until the surface is clean of oxide.

a. Mechanical removal of oxides shall be confined to the immediate weld area; application to other surfaces of the metal shall be avoided.

b. Abrasive mats, Specification A–A–58054, Type 1, Grade AAA (very fine) are permitted.

c. Stainless steel brushes (hand or rotary), stainless steel wool and some abrasives can be used to remove oxides from unclad aluminum. The strand diameter of the wire brush utilized shall not be over 0.005 inch.

d. Rotary tools, such as, carbide burr/bits shall be used to remove high metal, preparing surfaces, or dressing cracks prior to welding. The carbide burr/bits shall not be used for other metal groups and shall be designated for the metal group used.

17. **SOLVENT WIPING.**

a. The preferred method for wiping surfaces prior to welding shall be with locally approved acetone.

b. As an alternative, methyl alcohol may be used when specified by engineering technical instruction.

c. The use of other solvents may be used provided that sufficient engineering instructions are included in the welding instructions and that the solvent is compatible with the base metal.

ORGANIZATIONAL, INTERMEDIATE AND DEPOT MAINTENANCE WELDING PREPARATION

Reference Material

Welding Electrodes ..... WP 005 03
Welding - General Information ..... WP 007 00

Alphabetical Index

Subject	Page No.
Defect Preparation For Welding	2
Fabrication and Fitup	6
Fixtures Preparation	6

Record of Applicable Technical Directives

None

NOTE

This Work Package contains GUIDANCE information to supplement higher order technical document or instructions.

1. **DEFECT PREPARATION FOR WELDING.**

a. Inspection Before Welding. It is important that the ends of a crack be found so that the crack will be completely welded. If the crack is not completely welded, it may grow after welding. Proceed as follows:

(1) Fluorescent Penetrant inspect defective area.

(2) Mark the ends of the crack, using chalk, so that the marking will not be removed by degreasing.

(3) Degrease the part.

b. Preparing Defects For Welding. When preparing a part for welding, it is extremely important that all contaminants are removed from the repair area. Contaminants not removed can cause a crack to form in the weld after the part is returned to service. Prepare the part as follows:

(1) Degrease the part and dry the part, using filtered compressed air.

(2) The defects must be prepared by grinding or rotary filing, etching the exposed surface, and re-inspecting the area using NDI methods before welding. Remove all paint, scale, and carbon deposits from both front and back surfaces of the weld area, using a stainless steel rotary brush or 80-320 grit abrasive roll, disk, or sheet. Remove all anodic or other chemical protective coating from front or back surfaces of aluminum parts within 1/2 inch of the weld area, using 160-180 grit abrasive roll, disk or sheet.

CAUTION

Use approved pure dye markers for marking engine hardware. Using non-approved markers can leave harmful elements on the parts. These elements can cause intergranular attack. If a part has been inadvertently marked with an unauthorized material, remove all traces of the material.

c. Mark ends of the crack.

d. Using a stainless steel rotary brush, abrasive roll, or either dryblast or wet-blast process, clean the area to be repaired; clean both sides of part if possible. DO NOT use glass beads with the wet-blast process. If grit-blast is used, the surface shall be polished with the rotary stainless to remove all grit-blast residue on the surface.

e. Using a bright light and a 10-power magnifying glass, find the end of the crack.

f. If necessary, remark the ends of the crack.

g. If a crack extends into a rivet hole, remove the rivet before welding. (The repair-weld must be ground flush and the hole re-drilled or reamed before replacing the rivet.)

h. Using an electric or air hand-grinder and suitable carbide rotary grinding bits and stones (Figure 1), completely grind out the crack as shown in Figure 2.

(1) Select a grinding bit or stone based on the width of the crack to be ground out. Keep the groove as narrow as possible.

(2) If the crack does not go through the material, grind it out completely. Remove stock from both edges of the crack to the minimum depth and width that exposes sound metal, and to a length approximately 1/8 inch beyond each end of crack.

(3) If the crack goes through the material whose thickness is less than 0.045 inch, grind it out, removing about half of the material thickness.

(4) If the crack goes through the material that is 0.045-0.090 inch thick, grind it out on one side, removing about 75% of the material thickness. Weld this side; then grind out the remainder of the crack on other side of part.

(5) If the crack is more than 0.090 inch thick, grind it out to within 0.030 inch of opposite surface.

(6) If there is more than one layer of material, grind out the crack completely, even if this requires grinding into the next layer.

(7) Grind 1/8 inch beyond the end of all cracks, if possible.

i. If the part has not been blasted, remove the surface oxides, using fine abrasive cloth or soft abrasive wheel.

(1) Do not reduce the material thickness.

(2) Clean the surface within 1/4 to 1/2 inch of the crack to remove oxides.

(3) Clean the back side of the crack also if accessible.

j. Grind out all burned metal.

k. Grind out old filler material.

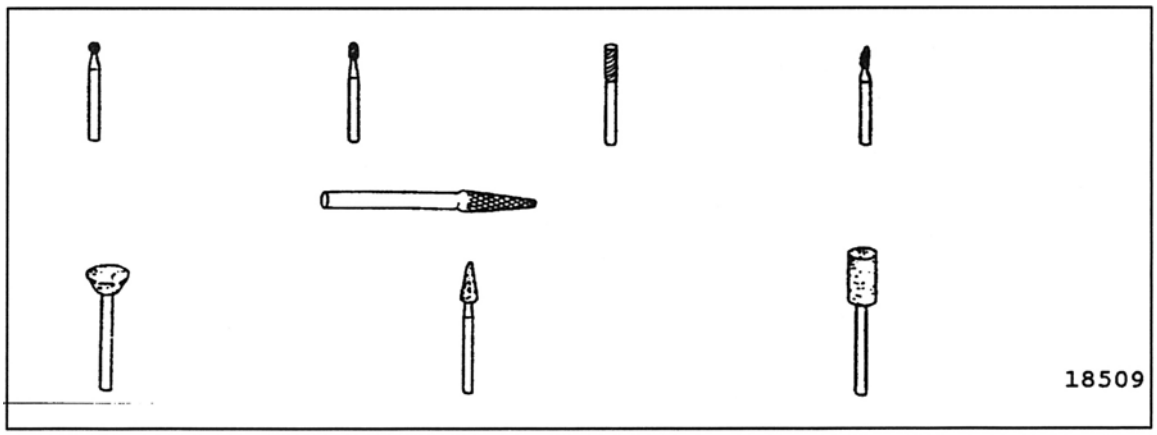

Figure 1. Rotary Grinding Bits and Stones

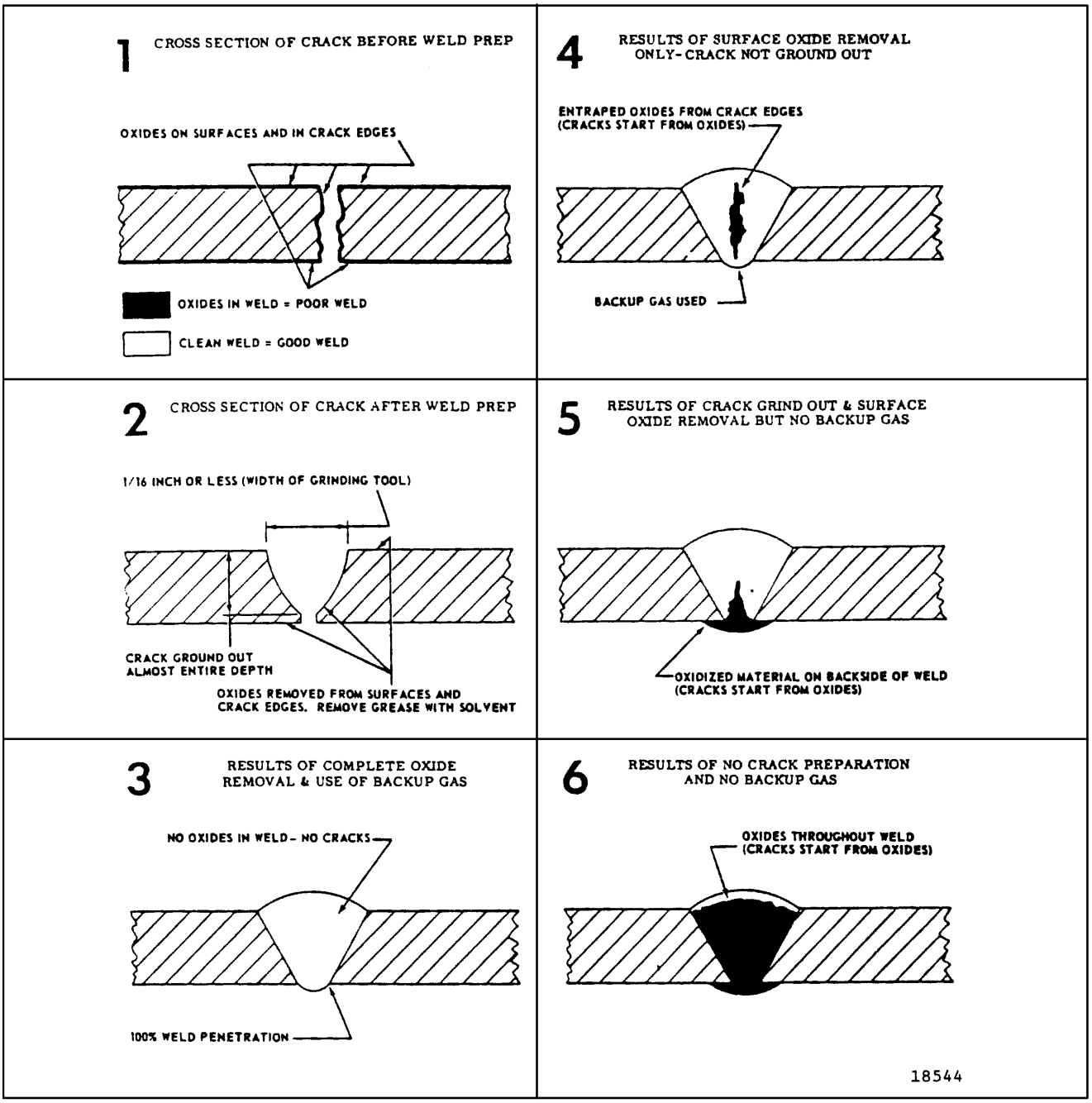

Figure 2. Crack Repair-Weld Practices

WARNING

Do not inhale vapors from solvents. Do not use solvents near open flame or sparks.

l. If the prepared area is oily or greasy, clean with an approved solvent.

m. Where welding is done from both sides, the root shall be ground or rotary filed to sound metal.

n. Polish all filler wire with an abrasive mat and wipe clean.

o. Filler materials for various metals are described in Work Package 003 05, **WELDING ELECTRODE**. Specific filler metal selections are located within the respective WP 007 subsections and the filler metal tables are to be used only as a guide and are not intended to replace requirements specified by drawings, technical orders or other engineering data.

p. Amperages may vary with thickness and type of material to be repair-welded. Table 1 lists variances due to thickness and type of current used.

Table 1. Amperage Variations

CATEGORY I (DC, STRAIGHT POLARITY)		**CATEGORY III (AC, HIGH FREQUENCY)**	
Thickness	Amperage	Thickness	Amperage
to 0.045 inch	30-40	to 0.045 inch	30-100
0.045-0.065 inch	40-65	0.045-0.065 inch	50-150
0.065-0.090 inch	60-100	0.065- 0.080 inch	125-220
over 0.090 inch	60-120 (multipass)		
castings	50-150		
CATEGORY II (DC, STRAIGHT POLARITY)		**CATEGORY IV (DC, STRAIGHT POLARITY) (TITANIUM)**	
Thickness	Amperage	Thickness	Amperage
to 0.045 inch	35-45	to 0.045 inch	40-50
0.045-0.060 inch	50-60	0.045-0.064 inch	60-70
0.060-0.080 inch	60-85	0.065-0.090 inch	70-95
0.080-0.100 inch	80-105	over 0.090 inch	70-95
0.100-0.125 inch	90-150	castings	50-150
0.125 inch and over	90-150(multipass)		
castings	50-150		

2. **FIXTURES PREPARATION.**

a. Any part of the workspace, fixture, and chill ring that come in contact with the weld or welded component must be cleaned prior to welding.

b. Wire bush and using clean, dry, compressed air, remove all debris and wipe surfaces with acetone and let air dry.

3. **FABRICATION AND FITUP.**

a. Alignment of Butt Joints. Unless otherwise specified on the drawing, when manual welding, cross section alignment of sheet, plate or tubing surfaces adjacent to the butt weld joint shall be within 0.010 inch or 10% of the thickness of the material in the joint or whichever is less.

b. Alignment of Mating Parts. Mating-parts shall join together so that the gaps between them, due to the irregularity of mating surfaces or edges, shall not exceed 25% of the thinner part, or 1/16 inch or whichever is less. Faying edges that have shear marks shall be draw filed. Clean parts after draw filing.

c. BACK-UP BARS. Back-up bars (chilling or otherwise) shall be made of copper, (deoxidized) aluminum, or stainless steel machined so that no part of the back-up bars come in contact with the molten weld puddle, drop-thru reinforcement, or bead reinforcement.

d. Tack welds may be used to hold the mating parts prior to completing the weld operation, but shall be of minimum size and shall be free of defects.

ORGANIZATIONAL, INTERMEDIATE AND DEPOT MAINTENANCE

WELDING – GENERAL INFORMATION

Reference Material

None

Alphabetical Index

Subject	Page No.
Aluminum Alloys (Group IV)	5
Carbon and Alloy Steels (Group I)	3
Cobalt Alloys (Group VII)	7
General	2
Work Package Contents	2
Magnesium Alloys (Group V)	5
Nickel and Precipitation-hardening Nickel Alloys (Group III)	4
Other Metal Alloys	7
Stainless and Precipitation-Hardening Stainless Steel (Group II)	3
Thermal Treatments	7
Titanium Alloys (Group VI)	6
Tungsten Geometry	2
Welding Techniques	2

Record of Applicable Technical Directives

None

NOTE

This Work Package contains GUIDANCE information to supplement higher order technical document or instructions.

1. **GENERAL.**

a. This work package is designed to provide the welder with a source of welding technique and information for making a satisfactory weld.

b. Each material groups, I-VII and “Other” are described with general information pertaining to the weldability of each metal alloy. The information provided is intended to supplement current technical instructions with in-depth knowledge and suggested welding techniques for producing a quality weld.

2. WORK PAGE CONTENTS.

a. This Work Package Series comprises general welding information to supplement the welder's experience and knowledge.

b. Work Package 007 00 discusses general welding knowledge and various weldability descriptions of the seven base metal groups most welders will encounter.

c. The remaining work packages are:

- WP 007 01 Welding Carbon and Alloy Steels (Group I)
- WP 007 02 Welding Stainless Steel Alloys (Group II)
- WP 007 03 Welding Nickel Alloys (Group III)
- WP 007 04 Welding Aluminum Alloys (Group IV)
- WP 007 05 Welding Magnesium Alloys (Group V)
- WP 007 06 Welding Titanium Alloys (Group VI)
- WP 007 07 Welding Cobalt Alloys (Group VII)
- WP 007 08 Welding Cast Iron
- WP 007 09 Welding Other Alloys

3. **WELDING TECHNIQUES.**

a. The tables in this work package may provide some general information to assist in establishing the necessary techniques for depositing a proper weld. The information provided is not all inclusive and depending on repair or fabrication conditions, other methods or techniques may be employed. Refer to applicable technical documentation for additional information.

4. **TUNGSTEN GEOMETRY.**

a. Preparation of tungsten electrode geometries should have the following characteristics and the component technical may provide more specific information.

b. Electrode tips shall be ground longitudinally and concentrically with diamond wheels only and with the following included angle range:

(1) For amperages below 100 amps (low current), an electrode tip should be in the 10° to 25° included angle range.

(2) For amperages above 100 amps (high current), an electrode tip should be in the 25° to 45° included angle range.

c. The tip/flat preparation can influence the different arc shapes and weld penetration capabilities. Table 1 provides guidance on selecting the tip/flats based on electrode diameter.

d. Electrode Angle Surface Finish.

(1) In general, the smoothness of the ground electrode should exhibit fine ground lines with approximately a 20 RMS finish.

(2) High polish or near-mirror like finishes are permitted and would exhibit a 6-8 RMS finish.

Table 1. Tungsten Tip/Flat Recommendations

ELECTRODE DIAMETER (INCHES)	GENERAL TIP DIMENSIONS (INCHES)
.020	0 - .005
.040	0 - .020
1/16	0 - .030
3/32	.010 - .030
1/8	.010 - .040
5/32	.010 - .050
3/16	.010 - .060
1/4	.010 - .070

5. **CARBON AND ALLOY STEELS (GROUP I).**

a. Carbon steel and steel alloys listed in WP 007 01 list some common weldable metals encountered during the fabrication or repair of Support Equipment.

6. **STAINLESS AND PRECIPITATION-HARDENING STAINLESS STEELS (GROUP II).**

a. STAINLESS STEEL.

(1) Primary use of stainless steel is in the form of Austenitic Stainless steel which by definition, has a minimum of 16% chromium in the base metal. Additional elements, such as, nickel, is to stabilize the iron and contribute to the corrosion resistance properties.

(2) Welding austenitic stainless steels using other than welding grade (L) filler metal requires process control of welding time and heat.

> ***For example:*** Base metal SS304 (CRES 304) is joined to same and should be welded with a filler metal grade of 308L. The “L” grade filler metals are compositionally adjusted to control chromium depletion at the grain boundaries; Reducing sensitization of precipitating chromium carbides.

b. PRECIPITATION HARDENING STAINLESS STEEL.

(1) The precipitation-hardening stainless steels are iron-nickel-chromium alloys containing one or more precipitation hardening elements such as aluminum, titanium, copper, niobium, and molybdenum. The precipitation hardening is achieved by a relatively simple aging treatment of the fabricated part.

(2) The two main characteristics of all precipitation-hardening stainless steels are high strength and high corrosion resistance. High strength is, unfortunately, achieved at the expense of toughness. The corrosion resistance of precipitation-hardening stainless steels is comparable to that of the standard AISI 304 and AISI 316 austenitic alloys. The aging treatments are designed to optimize strength, corrosion resistance, and toughness. To improve toughness, the amount of carbon is kept low.

7. **NICKEL AND PRECIPITATION-HARDENING NICKEL ALLOYS (GROUP III).**

a. Filler metal compositions for Welding-heat-resisting alloys should be compatible with that of the base metal and of such ductility as to provide maximum freedom from cracking when considering the dilution ratio of filler to base metal.

b. Nickel alloy filler metals are designated by various designation systems however the alloys are usually identified according to their trade names, such as, C-263 or PK-33.

c. Nickel alloys are designated by various designation systems however the alloys are usually identified according to their trade names.

d. There are four main groups of nickel alloys:

(1) Commercially pure nickel alloys

- These alloys contain not less, than 99% of nickel.
- Three-digit numbers (2xx, 3xx) are used as trade names of commercial nickel.
- The alloys are characterized by very good corrosion resistance and high ductility.

(2) Nickel-copper alloys

- These alloys contain about 30% of copper, which form solid solution with nickel.
- The accepted trade name of Nickel-Copper Alloys is Monel.
- Nickel-Copper Alloy, containing aluminum and titanium as additional alloying elements (Monel K-500), is heat-treatable and may be strengthened by precipitation hardening.

(3) Non-heat-treatable nickel-chromium-iron alloys

- The major alloying elements of these alloys (15-22% of chromium and up to 46% of iron) form solid solution with nickel.
- The alloys may be hardened by cold work.
- The non-heat-treatable Nickel-Chromium-Iron Alloys are identified according to their trade names Inconel, Incoloy and Hastelloy.

(4) Heat-treatable nickel-chromium-iron alloys

- These alloys may be strengthened by precipitation hardening due to presence of additional alloying elements: aluminum, titanium, silicon.
- Nimonic, Inconel X-750, Udimet, Waspaloy, Rene, Astroloy are some of the trade names of heat-treatable Nickel-Chromium-Iron Alloys.

8. **ALUMINUM ALLOYS (GROUP IV).**

a. Aluminum and its alloys can be joined by more methods than any other metal, but aluminum has several chemical and physical properties that need to be understood when using the various joining processes.

b. The specific properties that affect welding are its oxide characteristics, its thermal, electrical, and nonmagnetic characteristics, lack of color change when heated, and wide range of mechanical properties and melting temperatures that result from alloying with other metals.

c. Oxide. Aluminum oxide melts at about 3722°F which is much higher than the melting point of the base alloy. If the oxide is not removed or displaced, the result is incomplete fusion. In some joining processes, chlorides and fluorides are used in order to remove the oxide contain. Chlorides and fluorides must be removed after the joining operation to avoid a possible corrosion problem in service.

d. Hydrogen Solubility. Hydrogen dissolves very rapidly in molten aluminum. However, hydrogen has almost no solubility in solid aluminum and it has been determined to be the primary cause of porosity in aluminum welds. High temperatures of the weld pool allow a large amount of hydrogen to be absorbed, and as the pool solidifies, the solubility of hydrogen is greatly reduced. Hydrogen that exceeds the effective solubility limit forms gas porosity, if it does not escape from the solidifying weld.

e. Electrical Conductivity. For arc welding, it is important that aluminum alloys possess high electrical conductivity -- pure aluminum has 62% that of pure copper. High electrical conductivity permits the use of long contact tubes guns, because resistance heating of the electrode does not occur, as is experienced with ferrous electrodes.

f. Thermal Characteristics. The thermal conductivity of aluminum is about 6 times that of steel. Although the melting temperature of aluminum alloys is substantially bellow that of ferrous alloys, higher heat inputs are required to weld aluminum because of its high specific heat.

g. High thermal conductivity makes aluminum very sensitive to fluctuations in heat input by the welding process.

9. **MAGNESIUM ALLOYS (GROUP V).**

a. Magnesium is the lightest structural metal. It is approximately two-thirds as heavy as aluminum and one-fourth as heavy as steel. Magnesium alloys containing small amounts of aluminum, manganese, zinc, zirconium, etc., have strengths equaling that of mild steels. They can be rolled into plate, shapes, and strip.

b. Magnesium can be cast, forged, fabricated, and machined. As a structural metal it is used in aircraft. It is used by the materials-moving industry for parts of machinery and for hand-power tools due to its strength to weight ratio.

c. Magnesium can be welded by many of the arc and resistance welding processes, as well as by the oxy-fuel gas welding process, and it can be brazed. Magnesium possesses properties that make welding it different than the welding of steels. Many of these are the same as for aluminum. These are:

- Magnesium oxide surface coating
- High thermal conductivity
- Relatively high thermal expansion coefficient
- Relatively low melting temperature
- The absence of color change as temperature approaches the melting point.

d. The normal metallurgical factors that apply to other metals apply to magnesium as well. Magnesium is a very active metal and the rate of oxidation increases as the temperature is increased. The melting point of magnesium is very close to that of aluminum, but the melting point of the oxide is very high. In view of this, the oxide coating must be removed.

e. Magnesium has high thermal heat conductivity and a high coefficient of thermal expansion. The thermal conductivity is not as high as aluminum but the coefficient of thermal expansion is very nearly the same. The absence of color change is not too important with respect to the arc welding processes.

10. **TITANIUM ALLOYS (GROUP VI).**

a. Welding titanium requires an understanding of the atmosphere surrounding titanium and the prevention of oxidation during the welding process. Titanium can and will absorb oxygen and hydrogen at a fast rate which influences the hardness or brittleness of the weld bead and heat affected zone.

b. The following fusion-welding processes are used for joining titanium and titanium alloys:

- Gas-tungsten arc welding (GTAW)
- Gas-metal arc welding (GMAW)
- Plasma arc welding (PAW)
- Resistance welding (RW)

c. Fluxes cannot be used with these processes because they combine with titanium to cause brittleness and may reduce corrosion resistance. The welding processes that use fluxes are electroslag welding, submerged arc welding, and flux-cored arc welding. These processes have been used on a limited basis. However, they are not considered to be economical because they require high-cost, fluoride-base fluxes.

d. Gas-tungsten arc welding is the most widely used process for joining titanium and titanium alloys except for parts with thick sections. Square-groove butt joints can be welded without filler metal in base metals up to 1/8 inch thick. For thicker base metals, the joint should be grooved, and filler metal is required. The heated weld metal in the weld zone must be shielded from the atmosphere to prevent contamination with oxygen, nitrogen, and carbon, which will degrade the weldment ductility.

e. Gas-metal arc welding is used to join titanium and titanium alloys more than 1/8 inch. It is applied using pulsed current or the spray mode and is less costly than GTAW, especially when the base metal thickness is greater than 1/2 inch.

f. Plasma arc welding is also applicable to joining titanium and titanium alloys. It is faster than GTAW and can be used on thicker sections, such as one-pass welding of plate up to 1/2 inch thick, using keyhole techniques.

g. Resistance welding is used to join titanium and titanium alloy sheet by either spot welds or continuous seam welds. The process is also used for welding titanium sheet to dissimilar metals, that is, cladding titanium to carbon or stainless steel plate.

11. **COBALT ALLOYS (GROUP VII).**

a. The high-alloy content cobalt-bearing alloys affords excellent resistance to corrosion, oxidation, and elevated temperature retention of hot hardness up to a maximum of 1200°F (650°C). These alloys are not subject to metallurgical transformations and therefore do not lose their properties if the base metal is subsequently heat treated.

b. Cobalt alloy materials are sensitive to cracking in the weld deposits and, pre-heat and interpass temperatures as well as cooling rate must be closely controlled.

12. **OTHER METAL ALLOYS.**

a. Other metals covered by this general series manual are for the rare instances the welder may be called upon to perform welding on base metals not commonly associated with aviation materials.

13. **THERMAL TREATMENTS.**

a. If a pre-weld, in-process, or post-weld thermal treatment is provided in the tables of this work package, the temperatures and/or times provided must be followed to ensure a properly deposited weld.

b. Some technical manuals or other engineering documentation may alter the requirements written herein and in those instances, the technical documentation takes precedence.

THIS PAGE INTENTIONALLY LEFT BLANK

ORGANIZATIONAL, INTERMEDIATE AND DEPOT MAINTENANCE

WELDING CARBON AND ALLOY STEEL (GROUP I)

Reference Material

None

Alphabetical Index

Subject	Page No.
Cleaning	9
Electric Arc Welding Ferrous Metals	14
Heat Treatments / Stress Relief	19
Joint Design	10
Preparation of Weld Joint	10
Material Types	2
Metal-Arc Welding High Carbon Steels	16
Metal-Arc Welding High Hardness Alloy Steels	17
Metal-Arc Welding High Yield Strength, Low Alloy Structural Steels	18
Metal-Arc Welding Low Carbon Steels	14
Metal-Arc Welding Medium Carbon Steels	16
Metal-Arc Welding Tool Steels	17
Safety	2
Shielding Gas	8
Tools	9
Tungsten	9
Weld Filler Metals	3
Weld Technique	10
Braze Welding Steel	11
Chrome-Molybdenum Alloy Steels	13
General Principles in Welding Steel	12
Low Carbon Steel	11
Oxyacetylene Welding	10
Preheating	13
Weld Steel Plates	12

Record of Applicable Technical Directives

None

NOTE

This Work Package contains GUIDANCE information to supplement higher order technical document or instructions.

1. **SAFETY.**

WARNING

Do not breathe fumes and gases. Keep your head out of the fumes.

Use enough ventilation or exhaust at the arc or both to keep fumes and gases from your breathing zone and general area.

If ventilation is questionable, use air sampling to determine the need for corrective measures.

Keep exposure as low as possible.

2. **MATERIAL TYPES.**

a. Carbon steel and steel alloys are generally weldable depending on the carbon content. Table 1 describes four different groups of carbon steels and the weldability. Cast Iron is generally defined above 1.0% carbon content of the base metal.

b. As the carbon content increases, whether carbon steel or alloy steel, the need for preheat, interpass, or post heat operations becomes more important.

c. Prior to welding carbon, determine the carbon content and whether any preheat, interpass or post weld heat treatments are required.

Table 1. Percent Carbon and Weldability

GROUP	CARBON %	WELDABILITY
Low carbon steel	0.15 Maximum	Excellent weldability with all processes usually no preheat interpass or postheat necessary
Mild steel Plain carbon	0.15 to 0.30	Readily weldable with all processes without preheat, interpass, or postheat except for very thick sections.
Medium carbon steel	0.30 to 0.50	Parts may be readily welded with all process if preheat, interpass temperature controls, and post heat recommendations are followed. Use Low hydrogen Electrodes and appropriate filler wire. Heat treating after welding may be applied
High carbon steels	0.50 To 1.0	Usually require preheat interpass temperature control and postheat. Special heating and cooling procedures in a furnace such as normalizing may be required to restore the properties of the metal after welding. High carbon Electrodes designed for welding tool steels or the specific alloy are readily available from welding supply companies.

d. Hardness in Arc Welding.

(1) Arc welding produces greater hardness in the heat affected zone than oxyacetylene welding for the same type of welding operation, and the hardened zone is more concentrated. In general the greater the hardness produced in arc welds, the more likely is the weld to crack when the molten metal solidifies.

(2) Arc welds on plate containing 0.35 percent carbon or higher show a greater rate of increase in hardness than in steels containing a lesser amount of carbon. In alloy steels, certain elements are added to increase the strength, but these also increase the hardness produced by the carbon. Readily weldable grades of plate are those with a low carbon content since the welding process on these will not induce excessive hardness.

(3) In plain carbon steels having 0.25 percent carbon or less, welds made by either arc or gas welding do not cause any noticeable degree of change in hardness, ductility, or tensile strength.

3. **WELD FILLER MATERIALS.**

NOTE

Filler metals shall be in accordance with the technical repair instructions of the component. This section is for guidance only.

a. Low Hydrogen Electrodes Storing and exposure limits.

(1) SMAW electrodes with low hydrogen coatings, such as E7018 and E8018-C3, must be kept very dry since hydrogen induced cracking can easily occur, especially in steels that are 80,000 psi and higher yield strengths.

(2) Use only electrodes removed from hermetically sealed containers, which provide excellent protection against moisture pickup.

(3) Do not open the hermetically sealed containers until the electrode is needed for use.

(4) When the cans are opened, electrodes that will not be immediately used should be placed in a cabinet at 250°F to 300°F (120°C to 150°C).

(5) Electrodes should be supplied to welders in quantities that can be consumed within time limits that are dependent on the electrode type and strength level. For example, standard E7018 electrodes can be safely be exposed to the atmosphere for 4 hours whereas standard E11018 electrodes are restricted to only ½ hour.

b. Austenitic Stainless Steel Electrodes Storing and exposure limits.

(1) Austenitic Stainless Steel for SMAW must be kept dry. Typically, the first problem that will be noticed with welding with such electrodes that have been contaminated with moisture will be weld porosity. Other operational characteristics may also be affected.

c. Non-low hydrogen electrodes Storing and exposure limits.

(1) SMAW electrodes such as E6010 and E7014 are not low hydrogen, and yet it is important that these electrodes also be properly stored. Unlike the low hydrogen electrodes that always must be kept dry, some of the non-low hydrogen electrodes need some moisture in the coatings in order to perform properly. If these electrodes are too dry, they may not function properly. Alternative, excessively moist electrodes may cause other problems. The following procedures should be followed:

(a) Store these non low hydrogen electrodes from the freshly opened containers in heated cabinets at 100°F to 120°F (40°C to 50°C).

(b) Do not use higher temperatures.

d. Oxy-acetylene welding filler metal.

(1) Besides a welding torch with a proper tip size, a filler metal of the required composition and a proper flux are important to the success of any brazing operation.

(2) The choice of the filler metal depends on the types of metals to be joined. Copper-silicon (silicon-bronze) rods are used for brazing copper and copper alloys. Copper-tin (phosphor-bronze) rods are used for brazing similar copper alloys and for brazing steel and cast iron. Other compositions are used for brazing specific metals.

(3) Fluxes are used to prevent oxidation of the filler metal and the base metal surface, and to promote the free flowing of the filler metal. They should be chemically active and fluid at the brazing temperature. After the joint members have been fitted and thoroughly cleaned, an even coating of flux should be brushed over the adjacent surfaces of the joint, taking care that no spots are left uncovered. The proper flux is a good temperature indicator for torch brazing because the joint should be heated until the flux remains fluid when the torch flame is momentarily removed.

e. Table 2 lists the characteristics of various types of carbon and alloy steels pertaining to electrode suggestion, specification; any preheat or post heat treatments. This table is intended for guidance and specific or additional welding instructions may be obtained from the cognizant engineering group.

(1) Specifications listed are legacy documents. Specific information regarding later specifications can be obtained from the cognizant engineering group.

Table 2. Welding Characteristics – Carbon and Alloys Steels

STEEL DESIGNATION	COVERED ELECTRODE	FILLER ROD	HEAT TREATMENT		REMARKS
			PREHEAT	POSTHEAT	
(Low Carbon) 1010 thru 1030	MIL-E-6843 Class A or B E6010	MIL-R-5632 Class I	None required if above 60°F.	If post heat used do not heat above 300°F and air cool.	These are low carbon steels, not requiring heat treatment.
(Low Carbon) Corten	QQ-E-450 E7016 or E7018	MIL-R-5632 Class 1	Same	Same	This is a low carbon alloy steel Not heat treatable.
(Low Carbon) NAX AC 9115	E6015, thin gauge, for arc welding; or MIL-E-22200 Types MIL-7015 for multipass welding.	MIL-R-5632 Class 2	Same	See Remarks	Light gauge should be normalized.
(Medium Carbon) 1035 1040, 1045	MIL-8018 E6015 E6016	MIL-R-5632 Class 2	300°-500°F	1035 should be stress relieved 1100°-1200°F. Normalize 1040 1045	See text.

Table 2. Welding Characteristics – Carbon and Alloys Steels (Cont)

STEEL DESIGNATION	COVERED ELECTRODE	FILLER ROD	HEAT TREATMENT PREHEAT	HEAT TREATMENT POSTHEAT	REMARKS
(Medium Carbon) 1050	MIL-8018 E6015 E6016	MIL-R-5632 Class 2	300° -800°F	Normalize	This steel is difficult to weld.
(High Carbon) 1055, 1060 1070, 1095		MIL-R-5632 Class 2	500° -800°F	Normalize	This steel is difficult to weld.
(Free Cutting) 1112			200°F	Normalize	This is a difficult alloy to weld. Best results obtained by use of electrode E8015 AWS, direct current reverse polarity brazing characteristics are good.
(Nickel Alloy) 2330- 2340	MIL-E-22200 AWS E8018-C2	MIL-R-5632 Class 2	200°F -500°F	Normalize	Not recommended for welding.(This steel has high carbon content.)
Listed for reference only, alloy not currently being produced.					
(Nickel Alloy) 2515	MIL-E-22200 Type MIL-12016 Class 1	MIL-R-5632 Class 2	200°F -400°F	Normalize	
(Ni Cr) 3115	MIL-E-22200 Type MIL-11015	MIL-R-5632 Class 2	200°F -500°F	Normalize	
(Ni Cr) 3140	MIL-E-22200/1C Type MIL-9018	MIL-R-5632 Class 2	200°F -500°F	Normalize	
(Ni Cr)	MIL-E-22200/1C	MIL-R-5632	200°F -300°F	Normalize	Preheating required before welding
(Cr-MO) 4130	AMS 6300 HT-4130 E8011	MIL-R-5632 Class 2 (see remarks)	200°F -500°F	Normalize	Where heat treatment is not required MIL-R-5632 Class 1 rod may be used. If heat treatment is required MIL-R-5632 Class 2 rod which is heat treatable may be used.
(Cr-Mo) 4037	E9015	MIL-R-5632 Class 2	200° -500°F	Normalize	Slightly lower weldability

Table 2. Welding Characteristics – Carbon and Alloys Steels (Cont)

STEEL DESIGNATION	COVERED ELECTRODE	FILLER ROD	HEAT TREATMENT PREHEAT	HEAT TREATMENT POSTHEAT	REMARKS
					characteristics than 4130
(Cr-Mo) 4135	E-9015	MIL-R-5632 Class 2	200° -500°F	Normalize	
(Low Alloy) 17-22A (V)	MIL-E-6843 Class C or D	MIL-R-5632 Class 2	600°F	Normalize	Good weldability by any of the common welding methods.
(Cr-V) 4137 Co	E10015	------ MXW-2 WCX-2		250°F for 120 minutes	Good weldability using Tungsten-arc-inert gas method. Stress relief recommended after welding.
(Cr-Mo) 4140, 4150	E10015	MIL-R-5632 Class 2	600°-800°F	Normalize	See 4340
(High Carbon) High Chromium 52100	E10015	------	------	Normalize	
(Low Alloy) Ladish-D-5-A	E10015	MIL-R-5632 Class 2	600°F	Normalize	This alloy is weldable in heavy sections employing techniques for welding high hardenability medium low alloy.
(Low Alloy) Hi-Tuf	E10015	------	600°F	Normalize	Weld by conventional methods using low hydrogen electrodes of similar composition.
4330 VMOD 4337, 4340	MIL-E-22200 Type 260 E10016 E12015	MIL-R-5632 Class 2	600°F	DO NOT Normalize	Fusion or resis-tance welding not permitted on parts heat treated to 260,000-280,000 PSI tensile due to embrittlement of the joint area. Spot/seam welding not recommended

Table 2. Welding Characteristics – Carbon and Alloys Steels (Cont)

STEEL DESIGNATION	COVERED ELECTRODE	FILLER ROD	HEAT TREATMENT PREHEAT	HEAT TREATMENT POSTHEAT	REMARKS
					due to air hardening.
Nitralloy 136 Mod	See Remarks E8018-C2	See Remarks		Normalize before machining.	Welding is most successful by use of 2.5% chromium rod with the atomic hydrogen process. If nitriding is not required, conventional methods maybe used, using MIL-R-5632 Class 2 or MIL-E-6843 Class C or D.
(Ni-Mo) 4615	E9018G	MIL-R-5632 Class 2	400°F	600°F	
(Ni-Mo) 4620	E9018G	MIL-R-5632 Class 2	600°F	800°F	
(Ni-Mo) 4640	E9018G	MIL-R-5632 Class 2	600°F	800°F	
6150 6152	E9018G	MIL-R-5632 Class 2			
8615 8617 8620	E9018G	MIL-R-5632 Class 2	200°-300°F	Normalize	Low hydrogen type electrodes (particularly when low preheat and interpass temperatures are employed) are generally used for welding this group.
8735	E10018G	MIL-R-5632 Class 2	200°-300°F	Normalize	
8630	E9018G	MIL-R-5632	300°-500°F	Stress Relieve 1100°-1200°F or Normalize	Shielded-arc carbon molybdenum electrodes are recommended. Bare electrodes produce brittle welds.

Table 2. Welding Characteristics – Carbon and Alloys Steels (Cont)

STEEL DESIGNATION	COVERED ELECTRODE	FILLER ROD	HEAT TREATMENT PREHEAT	HEAT TREATMENT POSTHEAT	REMARKS
D-5-A	------	------	450° -550°F	575°F -625°F, 1-1/2 hr cool in still air to 300°F followed by immediate stress relief. Alternate, transfer to furnace at pre-heat temp & normalize at 1725°F -1775°F, 30 minutes; air cool.	Weldable in heavy section using normal techniques re-quired for welding high hardenable medium carbon low alloy steel. Sections less than 0.125 in some instances may be welded by tungsten inert gas process without preheating.

4. **SHIELDING GAS.**

a. Shielded Metal Arc Welding (SMAW) generates its own protective shielding gas through the decomposition of the electrode coating or flux.

b. Gas Metal Arc Welding (GMAW) shielding gas depends on the type of wire transfer required by the weld procedure. The main types of transfer are the Short Arc, Spray, and the Cored wire.

d. Typical shielding gases either used singularly or in combination are listed in Table 3. Always consult with the T/M/S Technical Manual for specific applications.

Table 3. Common Shielding Gases for Gas Metal ARC Welding Carbon and Alloy Steels

Metal Transfer Mode	Shielding Gas Mixture
Short Arc	98Ar-2CO_2 75Ar-25CO_2 88Ar-12CO_2 50Ar-50CO_2 100 CO_2
Spray	95Ar-5O_2 92Ar-8CO_2 98Ar-2O_2

e. Shielding Gas. Argon may be used for all thicknesses and set the flow rate at 10 to 20 ft^3/h.

f. Weld Backing Gas. Protect the root side of all complete penetration welds by using the proper tooling to close off the backside of the weld while purging the atmosphere from argon dam..

g. Sluggish weld pools which cannot be controlled or discoloration indicates too much heat input, or a “star crack” indicates improper gas coverage because the weld pool is solidifying too quickly.

h. Carbide precipitation on the backside of the weld is commonly called “sugaring” because of the appearance and indicates poor backing gas coverage.

i. Extended Postflow. When welding alloy metals, set the gas postflow to 5 to 10 seconds longer than normal and keep the torch in position until the weld cools. Prior to using the filler rod again, trim the end to prevent contamination.

5. **TUNGSTEN.**

a. Refer to WP 004 01 **GAS TUNGSTEN ARC WELDING** for general information about tungsten selection and WP 007 00 **WELDING – GENERAL INFORMATION** for general information about tungsten geometry preparation.

b. When Gas tungsten Arc welding carbon steels the tungsten electrode should be 1.5% Lanthanum.

c. Tungsten Extension. Keep the tungsten extension (stickout) as short as possible, ideally 3 16 in. or less on butt joints. This helps ensure that the welding arc stays within the shielding gas envelope. Thicker material or fillet welds may require extensions of 3 8 to 1 2 in.

d. Gas Lens. To create a smoother, more stable flow of shielding gas and superior shielding gas envelope, always use a gas lens. Use the largest cup practical for the application.

6. **TOOLS.**

NOTE

All cleaning tools including wire brushes and carbide grinding tools should be clean and free of debris or other metal fragments

a. Stainless steel or Carbon steel wire brushes, powered or manual, are preferred to remove light rust from the surfaces prior to welding. Brushes should be identified for use on carbon steel and kept segregated from other alloys, such as, titanium and aluminum applications.

b. Rotary devices are allowed if permitted by the component technical manual.

7. **CLEANING.**

a. In general, carbon steel components should be cleaned by the following methods, unless the component technical manual specifies otherwise:

- Degrease using approved alkaline detergent
- Brush using a stainless steel wire brush or nylon bristle brush as needed
- Rinse thoroughly with fresh water
- Dry using oil-free compressed air
- Apply CPC as needed

8. **JOINT DESIGN.**

a. The V groove joint is the proper design used for braze welding with copper base or bronze welding rods, but it is not suitable for braze joints where the filler metal is distributed in the joint by capillary attraction.

WARNING

Dry cleaning solvent and mineral spirits paint thinner are highly flammable. Do not clean parts near an open flame or in a smoking area. Dry cleaning solvent and mineral spirits paint thinner evaporate quickly and have a defatting effect on the skin. When used without protective gloves, these chemicals may cause irritation or cracking of the skin. Cleaning operations should be performed only in well ventilated areas.

9. **PREPARATION OF WELD JOINT.**

The edges to be joined should be thoroughly cleaned of oxides by grinding or brushing. Surface dirt and grease should be washed away for a distance not less than one inch from each side of the joint with a grease solvent such as dry cleaning solvent or mineral spirits paint thinner. In brazing, galvanized coatings need not be removed. A flux paste applied for a distance of two inches on each side of the joint will prevent the galvanized coating from peeling or burning off. Parts to be joined should be aligned correctly and tack welded or clamped in the proper position.

10. **WELD TECHNIQUE.**

11. **OXYACETYLENE WELDING.**

a. Welding Sheet Metal. For welding purposes the term ”sheet metal” is restricted to thicknesses of metals up to and including 1/8 inch.

b. Welds in sheet metal up to 1/16 inch thick can be made satisfactorily by flanging the edges at the joint. The flanges must be at least equal to the thickness of the metal. The edges should be aligned with the flanges in a vertical position and then tack welded every 5 or 6 inches. Heavy angles or bars should be clamped on each side of the joint to prevent distortion or buckling. The raised edges are equally melted by the welding flame. This produces a weld nearly flush with the sheet metal surface. By controlling the welding speed and the flame motion, good fusion to the underside of the sheet can be obtained without burning through. A plain square butt joint can also be made on sheet metal up to l/l6 inch thick by using a rust-resisting copper-coated low carbon filler rod 1/16 inch in diameter. The method of aligning the joint and tacking the edges is the same as that used for welding flanged edge joints.

c. Where it is necessary to make an inside edge or corner weld there is danger of burning through the sheet unless special care is taken to control the welding heat. Such welds can be made satisfactorily in sheet metal up to1/16 inch thick by following the procedures below:

d. Heat the end of a 1/8 inch low carbon welding rod until approximately 1/2 inch of the rod is molten.

e. Hold the rod so that the molten end is above the joint to be welded.

f. By sweeping the flame across the molten end of the rod the metal can be removed and deposited on the seam. The quantity of molten weld metal is relatively large as compared with the light gage sheet and its heat is

sufficient to preheat the sheet metal. By passing the flame quickly back and forth the filler metal is distributed along the joint and the additional heat supplied by the flame will produce complete fusion. This method of welding can be used for making difficult repairs on automobile bodies, metal containers, and similar applications.

g. For sheet metal 1/16 to 1/8 inch thick a butt joint, with a space of approximately 1/8 inch between the edges, should be prepared. A 1/8 inch diameter copper-coated low carbon filler rod should be used. Sheet metal welding with a filler rod on butt joints should be done by the forehand method of welding.

12. **LOW CARBON STEEL.**

a. In general no difficulties are encountered in welding low carbon steels properly made low carbon steel welds will equal or exceed the base metal in strength.

NOTE

Rods from 5/16 to 3/8 inch are available for heavy welding. However, heavy welds can be made with the 3/16 or 1/4 inch rods by properly controlling the puddle and melting rate of the rod.

b. Copper coated low carbon rods should be used for welding low carbon steel. The rod sizes for various plate thicknesses are as follows:

PLATE THICKNESS, INCH	ROD DIAMETER INCH
1/16 to 1/8	1/16
1/8 to 3/8	1/8
3/8 to 1/2	3/16
1/2 an heavier	1/4

c. The joints may be prepared by flame cutting or machining. The type of preparation figure 21 (WP004 04) will be determined by the plate thickness and the welding position.

d. No preheating, except to remove the chill from the plates, is required.

e. The flame should be adjusted to neutral. Either the forehand or backhand welding method may be used, depending on the thickness of the plates being welded.

13. **BRAZE WELDING STEEL.**

a. General. The term ”steel” may be applied to many ferrous metals which differ greatly in both chemical and physical properties. In general they may be divided into plain carbon and alloy groups. By following the proper procedures most steels can be successfully welded. However, parts fabricated by welding generally contain less than 0.30 percent carbon. Heat increases the carbon combining power of steel and care must be taken during all welding processes to avoid carbon pick-up.

b. Welding process. Steel heated with an oxyacetylene flame becomes fluid between 2,450°F and 2,750°F (1,343°C and 1,510°C), depending on its composition. It passes through a soft range between the solid and liquid state. This soft range enables the operator to control the weld. To produce a weld with good fusion the welding rod should be placed in the molten puddle; then the rod and base metal should be melted together so that they

will solidify to form a solid joint. Care should be taken to avoid heating a large portion of the joint, because this will dissipate the heat and may cause some of the weld metal to adhere to but not fuse with the sides of the welded joint. The flame should be so directed against the sides and bottom of the welded joint that complete penetration of the lower section of the joint is obtained. Weld metal should be added in sufficient quantities to fill the joint without leaving any undercut or overlap. Do not overheat because this will burn the weld metal and weaken the finished joint.

c. Impurities. Oxygen, carbon, and nitrogen act to produce defective weld metal because they tend to increase porosity, blowholes, oxides, and slag inclusions. When oxygen combines with steel to form iron oxides at high temperatures, care should be taken to ensure that all the oxides formed are removed by proper manipulation of the rod and torch flame. An oxidizing flame causes the steel to foam and give off sparks. The oxides formed are distributed through the metal and cause a brittle, porous weld. Oxides that form on the surface of the finished weld can be removed by wire brushing after cooling. A carburizing flame adds carbon to the molten steel and causes boiling of the metal. Steel welds made with strongly carburizing flames are hard and brittle. Nitrogen from the atmosphere will combine with molten steel to form nitrides of iron, which impair its strength and ductility if included in sufficient quantities. By controlling the melting rate of the base metal and welding rod, the size of the puddle, the speed of welding, and the flame adjustment, the inclusion of impurities from the above sources may be held to a minimum.

14. **WELDING STEEL PLATES.**

a. In plates up to 3/16 inch in thickness, joints are prepared with a space between the edges equal to the plate thickness. This allows the flame and welding rod to penetrate to the root of the joint. Proper allowance should be made for expansion and contraction in order to eliminate warping of the plates or cracking of the weld. Figures 21 and 22 (WP004 04) show edge preparation for different thicknesses of metal.

b. The edges of heavy section steel plates (more than 3/16 inch thick) should be beveled figure 21 (WP004 04) to obtain full penetration of the weld metal. Using the forehand method of welding.

NOTE

Welding of plates 1/2 to 3/4 inch thick is not recommended for oxyacetylene welding.

c. Plates 1/2 to 3/4 inch thick should be prepared for a U type joint figure 21 (WP 004 04) in all cases. The back hand method is generally used in welding these plates.

d. The edges of plates 3/4 inch or thicker are usually prepared by using the double V or double U type joint figure 21 (WP 004 04) when welding can be done from both sides of the plate. A single V or single U joint is used for all plate thicknesses when welding is done from one side of the plate.

15. **GENERAL PRINCIPLES IN WELDING STEEL.**

a. A well balanced neutral flame is used for welding most steels. To be sure that the flame is not oxidizing it is sometimes used with a slight acetylene feather. A very slight excess of acetylene may be used for welding alloys with a high carbon, chromium, or nickel content. However, increased welding speeds are possible by using a slightly reducing flame. Avoid excessive gas pressure because it gives a harsh flame, and makes molten metal control difficult.

b. The tip size and volume of flame used should be sufficient to reduce the metal to a fully molten state and to produce complete joint penetration. Care should be taken to avoid the formation of molten metal drip beads from the bottom of the joint. The flame should bring the joint edges to the fusion point ahead of the puddle as the weld progresses.

16. **CHROME-MOLYBDENUM ALLOY STEELS.**

a. These steels may be welded satisfactorily by all methods and processes. The oxyacetylene flame is generally preferred for welding thin walled tubing and light gage sheet metal. For materials greater than 3/32 inch thick the electric arc is preferred because the heat zone will be narrower; and as a result the base metal will be less affected by the heat stresses. This is a special advantage where the part is too large to be heat treated to relieve welding stresses.

b. The welding technique with the oxyacetylene flame is about the same as that required for carbon steels. The area surrounding the weld should be preheated between 300°F and 800° F(149°C and 427°C), depending on the thickness of the metal. This is necessary because a sudden application of flame without preliminary heating might cause the formation of cracks in the heated area. The flame should be directed at the metal at such an angle that preheating takes place ahead of the weld.

c. A copper-coated low carbon welding rod is used for general welding of this metal with the oxyacetylene flame. Chrome-molybdenum or high strength rods may be used for joints requiring high strength. The strength of parts welded with these rods can be increased by heat treatment.

d. A neutral or slightly carburizing flame must always be used. An oxidizing flame burns and weakens the steel. A weld made with this flame may crack on cooling unless contraction is unrestrained. A highly carburizing flame makes the metal brittle and will cause cracking on cooling. The volume of flame should be just large enough to melt the base metal and to obtain good fusion.

e. Overheating the metal will set up severe stresses and cause excessive grain growth. This condition produces low strength in the weld and the adjacent base metal.

f. The weld should be protected from the air as much as possible to avoid scaling and rapid cooling. When available, a jet of hydrogen directed on the metal from the side opposite the weld will reduce scaling caused by oxidation, and will add strength to the finished part by eliminating air hardening around the weld.

g. When jigs or fixtures are used they should be designed to allow a maximum amount of movement to avoid distortion or cracking due to contraction as the metal cools.

17. **PREHEATING.**

a. For welding plates under 1-inch thick, preheating above 50° F (10° C) is not required except to remove surface moisture from the base metal. Tables 4 and 5 contains suggested preheating temperatures.

Table 4. Suggested Preheat and Interpass Temperature for Various Alloy Bar Steels

Steel	Preheat and Interpass Temperature, °F For Section Thickness of:		
	To 1/2 inch	1/2 to 1 inch	1 to 2 inch
1330	350-450	400-500	450-550
1340	400-500	500-600	600-700
4023	100 min	200-300	250-350
4028	200-300	250-350	400-500
4047	400-500	450-550	500-600
4118	200-300	350-450	400-500
4130	300-400	400-500	450-550
4140	400-500	600-700	600-700

Table 4. Suggested Preheat and Interpass Temperature for Various Alloy Bar Steels (Cont)

Steel	Preheat and Interpass Temperature, °F For Section Thickness of: To 1/2 inch	1/2 to 1 inch	1 to 2 inch
4150	600-700	600-700	600-700
4320	200-300	350-450	400-500
4340	600-700	600-700	600-700
4620	100 min	200-300	250-350
4640	350-450	400-500	450-550
5120	100 min	200-300	250-350
5145	400-500	450-550	500-600
8620	100 min	200-300	250-350
8630	200-300	250-350	400-500
8640	350-450	400-500	450-550

Table 5. Suggested Preheat Temperature[1]

Plate thickness (inch)	Shielded metal-arc (manual arc) welding [2]	Gas metal-arc welding [3]	Submerged arc welding: Carbon steel or alloy wire, neutral flux [4]	Submerged arc welding: Carbon steel wire, alloy flux [5]
Up to 1/2, inclusive	50°F (10°C)	50°F (10°C)	50°F (10°C)	50°F (10°C)
Over 1/2 to 1, inclusive	50°F (10°C)	50°F (10°C)	50°F (10°C)	200°F 93°C
Over 1 to 2, inclusive	150°F (66°C)	150°F (66°C)	200°F (93°C)	300°F (149°C)
Over 2	200°F (93°C)	200°F (93°C)	300°F (149°C)	400°F (204°C)

1 Preheated temperatures above the minimum shown may be necessary for highly restrained welds. However, preheat or interpass temperatures should never exceed 400°F (204°C) for thicknesses up to and including 1 1/2 inches, or 450°F (232°C) for thicknesses over 1 1/2 inches.

2 Electrode E11018 is normal for this type steel. However, E12015, 16 or 18 may be necessary for thin sections, depending on design stress. Lower strength low hydrogen electrodes E100XX ;may also be used.

3 Example: A-632 wire (Airco) and argon with 1 percent oxygen.

4 Example: Oxweld 100 wire (Linde) and 709-5 flux.

5 Example: L61 wire (Lincoln) and A0905 X A10 flux.

18. **ELECTRIC ARC WELDING OF FERROUS METALS.**

a. Low Carbon Steels. The low carbon steels include those with a carbon content up to 0.30 percent (figure 1). These low carbon steels do not harden appreciably when welded and therefore do not require preheating or postheating except in special cases, such as when heavy sections are to be welded.

19. **METAL-ARC WELDING LOW CARBON STEELS.**

a. In metal-arc welding the bare, thin coated or heavy coated shielded arc types of electrodes may be used. These electrodes are of low carbon type (0.10 to 0.14 percent).

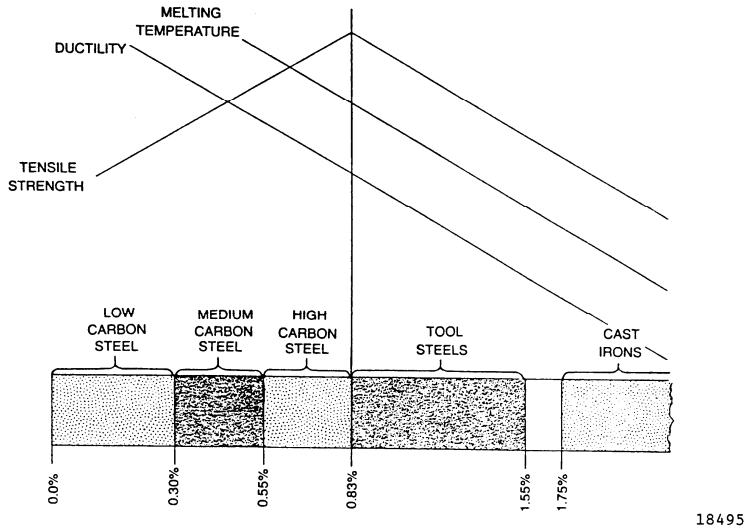

Figure 1. How Steel Qualities Change as Carbon is Added

b. Low carbon sheet or plate materials that have been exposed to low temperatures should be preheated slightly (to room temperature) before welding.

c. In welding sheet metal up to 1/8 inch in thickness, the plain square butt joint type of edge preparation may be used. When long seams are to be welded in this material, the edges should be spaced to allow for shrinkage because the deposited metal tends to pull the plates together. This shrinkage is less severe in arc welding than in gas welding and spacing of approximately 1/8 inch per foot of seam will suffice.

d. The back step or skip welding technique should be used for short seams that are fixed in place, in order to prevent warpage or distortion and minimize residual stresses (figure 2).

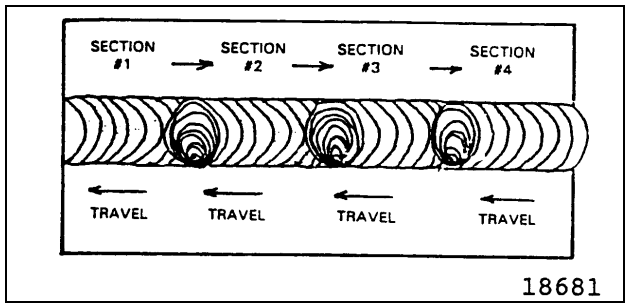

Figure 2. Backstep Method

e. Heavy plates should be beveled to provide an included angle up to 60 degrees, depending on the thickness. The parts should be tack welded in place at short intervals along the seam and the first or root bead should be made with an electrode small enough in diameter to obtain good penetration and fusion at the base of the joint. A 1/8 or 5/32 inch electrode is suitable for this purpose. This first bead should be thoroughly cleaned by chipping and wire brushing before additional layers of weld metal are deposited. The additional passes of filler metal should be made with a 5/32 or 3/16 inch electrode. These passes should be made with a weaving motion for plates in flat, horizontal, or vertical positions. For overhead welding, best results are obtained by using string beads throughout the weld.

f. In welding heavy sections that have been beveled from both sides, the weave beads should be deposited alternately on one side and then the other to reduce the amount of distortion in the welded structure. Each bead should be cleaned thoroughly to remove all scale, oxides, and slag before additional metal is deposited. The motion of the electrode should be controlled so as to make the bead uniform in thickness and to prevent undercutting and overlap at the edges of the weld. All slag and oxides should be removed from the surface of the completed weld to prevent rusting.

20. **METAL-ARC WELDING MEDIUM CARBON STEELS.**

a. General. Medium carbon steels include those that contain from 0.30 to 0.55 percent carbon. These steels are usually preheated to between 300° and 500°F (149° and 260°C) before welding.

b. Electrodes of the low carbon, heavy coated, straight or reverse polarity type, similar to those used for metal arc welding of low carbon steels, are satisfactory for welding steels in this group. The preheating temperatures will vary, depending on the thickness of the plates and their carbon content.

c. After welding, the entire joint should be heated to between 1,000° and 1,200°F (538° and 649°C) and slowly cooled to relieve stresses in the base metal adjacent to the weld.

d. Welding Techniques

(1) The plates should be prepared for welding in a manner similar to that used for low carbon steels. When welding with low carbon steel electrodes, the welding heat should be carefully controlled to avoid overheating of the weld metal and excessive penetration into the side walls of the joint. This control is accomplished by directing the electrode more toward the previously deposited filler metal adjacent to the side walls than toward the side walls directly. By using this procedure, the weld metal is caused to wash up against the side of the joint and fuse with it without deep or excessive penetration.

(2) High welding heats will cause large areas of the base metal in the fusion zone adjacent to the welds to become hard and brittle. The area of these hard zones in the base metal can be kept at a minimum by making the weld with a series of small string or weave beads, which will limit the heat input. Each bead or layer of weld metal will refine the grain in the weld immediately beneath it and will anneal and lessen the hardness produced in the base metal by the previous bead.

(3) When possible, the finished joint should be heat treated after welding. Stress relieving is normally used when joining mild steel; high carbon alloys should be annealed.

(4) In welding medium carbon steels with stainless steel electrodes, the metal should be deposited in string beads to prevent cracking of the weld metal in the fusion zone. When depositing weld metal in the upper layers of welds made on heavy sections, the weaving motion of the electrode should under no circumstances exceed three electrode diameters.

(5) Each successive bead of weld should be chipped, brushed, and cleaned prior to the laying of another bead.

21. **METAL-ARC WELDING HIGH CARBON STEELS.**

a. General. High carbon steels include those having a carbon content exceeding 0.55 percent. Because of the high carbon content and the heat treatment usually given to these steels, their basic properties are to some degree impaired by arc welding.

b. Preheating 500° to 800°F (260° to 427°C) before welding and stress relieving by heating from 1,200° to 1,450°F (649° to 788°C) with slow cooling should be used to avoid hardness and brittleness in the fusion zone. Either mild steel or stainless steel electrodes can be used with these steels.

c. Welding Technique.

(1) The welding heat should be adjusted to provide good fusion at the side walls and root of the joint without excessive penetration. Control of the welding heat can be accomplished by depositing the weld metal in small string beads. Excessive puddling of the metal should be avoided, because this will cause carbon to be picked up from the base metal which, in turn, will make the weld metal hard and brittle. Fusion between the filler metal and the side walls should be confined to a narrow zone. Use the surface fusion procedure prescribed for medium carbon steels.

(2) The same procedure for edge preparation, cleaning of the welds, and sequence of welding beads as prescribed for low and medium carbon steels applies to high carbon steels.

(3) Small high carbon steel parts are sometimes repaired by building up worn surfaces. When this is done, the piece should be annealed or softened by heating to a red heat and cooling slowly. Then the piece should be welded or built up with medium carbon or high strength electrodes and heat treated after welding to restore its original properties.

22. **METAL-ARC WELDING TOOL STEELS.**

a. General. Steels in this group have a carbon content ranging from 0.83 to 1.55 percent. They are rarely welded by arc welding, because of the excessive hardness produced in the fusion zone of the base metal. If arc welding must be done, either mild steel or stainless steel electrodes can be used.

b. Welding Technique.

(1) If the parts to be welded are small, they should be annealed or softened before welding. The edges should then be preheated up to 1,000°F (538°C) depending on the carbon content and thickness of the plate, and the welding should be done with either a mild steel or high strength electrode.

(2) High carbon electrodes should not be used for welding tool steels. The carbon pickup up from the base metal by the filler metal will cause the weld to become glass hard, whereas the mild steel electrode weld metal can absorb additional carbon without becoming excessively hard. The welded part should then be heat treated to restore its original properties.

(3) In welding with stainless steel electrodes, the edges of the plates should be preheated to prevent the formation of hard zones in the base metal. The weld metal should be deposited in small string beads to keep the heat input down to a minimum. In general, the application procedure is the same as that required for medium and high carbon steels.

23. **METAL-ARC WELDING HIGH HARDNESS ALLOY STEELS.**

a. Many varieties of alloy steels have been developed to obtain high strength, high hardness, corrosion resistance, and other special properties. Most of these steels depend on a special heat treatment process in order to develop the desired characteristic in the finished state.

b. Many of these steels can be welded with a heavy coated electrode of the shielded arc type whose composition is similar to that of the base metal. Low carbon electrodes can also be used with some steels and stainless steel electrodes are effective where preheating is not practicable or is undesirable.

c. Heat treated steels should be preheated, if possible, in order to minimize the formation of hard zones or layers in the base metal adjacent to the weld. The molten metal should not be overheated and for this reason, the welding heat should be controlled by depositing the weld metal in narrow string beads. In many cases, the procedure outlined for medium carbon steels and high carbon steels including the principles of surface fusion, can be used in the welding of alloy steels.

24. **METAL-ARC WELDING HIGH YIELD STRENGTH, LOW ALLOY STRUCTURAL STEELS.**

a. General. High yield strength, low alloy structural steels are special steels that are tempered to obtain extreme toughness and durability. The special alloys and general makeup of these steels require special treatment to obtain satisfactory weldments.

b. Welding Technique. Reliable welding of high yield strength, low alloy structural steels can be performed by using the following guidelines:

c. Correct Electrodes. Hydrogen is the number one enemy of sound welds in alloy steels, therefore, use only LOW HYDROGEN electrodes to prevent underbead cracking. Underbead cracking is caused by hydrogen picked up in the electrode coating, released into the arc and absorbed by the molten metal.

d. Moisture control of electrodes. If the electrodes are in an airtight container, immediately upon opening the container place the electrodes in a ventilated holding oven set at 250° to 300°F (121° to 149°C). In the event that the electrodes are not in an airtight container, put them in a ventilated baking oven and bake for 1/4 to 1 hour at 800°F (427°C). While they are still warm, place electrodes in the holding oven until used. Electrodes must be kept dry to eliminate absorption of hydrogen.

e. Low Hydrogen Electrode Selection. Electrodes are identified by classification numbers which are always marked on the electrode containers. For low hydrogen coatings the last two numbers of the classification should be 15, 16, or 18. Electrodes of 5/32 and 1/8 inch in diameter are the most commonly used since they are more adaptable to all types of welding on this type of steel. Table 6 is a list of electrodes used to weld high yield strength, low alloy steels.

Table 6. Electrode Numbers

E8015[1]	E9015[2]	E10015	E11015	E12015
E8016[2]	E9016	E10016	E11016	E12016
E8018	E9018	E10018	E11018	E12018

[1] The E indicates electrode; the first two or three digits indicate tensile strength; the last two digits indicate Covering; 15,16 and 18 all indicate a low hydrogen covering.
[2] Low hydrogen electrodes E80 and E90 are recommended for fillet welds since they are more ductile than the higher strength electrodes which are desirable for butt welds.

f. Selecting Wire-Flux and Wire-Gas Combinations. Wire electrodes for submerged arc and gas-shielded arc welding are not classified according to strength. Welding wire and wire-flux combinations used for steels to be stress relieved should contain no more than 0.05 percent vanadium. Weld metal with more than 0.05 percent vanadium may become brittle if stress relieved. When using either the submerged arc or gas metal-arc welding processes to weld high yield strength, low alloy structural steels to lower strength steels, the wire-flux and wire-gas combination should be the same as that recommended for the lower strength steels.

g. Welding Process. For satisfactory welds use good welding practices, as defined in this section, along with the following procedures:

(1) Use a straight stringer bead whenever possible.

(2) Restrict weave to partial weave pattern. Best results are obtained by a slight circular motion of the electrode with the weave area never exceeding two electrode diameters.

(3) Never use a full weave pattern.

(4) Skip weld as practical.

(5) Peening of the weld is sometimes recommended to relieve stresses while cooling larger pieces.

(6) Fillet welds should be smooth and correctly contoured. Avoid toe cracks and undercutting. Electrodes used for fillet welds should be lower strength than those used for butt welding. Air-hammer peening of fillet welds can help to prevent cracks, especially if the welds are to be stress relieved. A soft steel wire pedestal can help to absorb shrinkage forces. Butter welding in the toe area before actual fillet welding strengthens the area where a toe crack may start. A bead is laid in the toe area, then ground off prior to the actual fillet welding. This butter weld bead must be located so that the toe passes of the fillet will be laid directly over it during actual fillet welding. Because of the additional material involved in fillet welding the cooling rate is increased and heat inputs may be extended about 25 percent.

25. **HEAT TREATMENTS / STRESS RELIEF.**

a. Carbon steels, in most cases do not require additional post weld heat treatments, unless for distortion control. The post weld heat treatments listed in Table 2, are for reference and may not be suitable in all instances. Consult with the appropriate cognizant engineering group for specific and additional information.

THIS PAGE INTENTIONALLY LEFT BLANK

ORGANIZATIONAL, INTERMEDIATE AND DEPOT MAINTENANCE

WELDING STAINLESS STEEL ALLOYS (GROUP II)

Reference Material

Gas Tungsten ARC Welding Process ..... WP 004 01
Welding - General Information ..... WP 007 00

Alphabetical Index

Subject	Page No.
Cleaning	7
Heat Treatments / Stress Relief	8
Joint Design	7
Material Types	2
Safety	2
Shielding Gas	2
Stainless Steel Finishing	8
Tools	7
Tungsten	2
Weld Filler Metals	2
Weld Technique	7

Record of Applicable Technical Directives

None

NOTE

This Work Package contains GUIDANCE information to supplement higher order technical document or instructions.

1. **SAFETY.**

WARNING

Stainless steel alloys contain chromium and nickel as the major alloying constituents. All grinding, sanding and welding shall be in accordance with local industrial hygienist requirements.

2. **MATERIAL TYPES.**

a. Acceptable Stainless steel alloys, Austenitic and Martensitic (Group II) is found in Work Package series 003 and should be consulted prior to welding.

b. Alloys not listed may be welded provided sufficient engineering concurrence is attained.

c. Specific welding instructions may be provided and take precedence over this general series manual.

3. **WELD FILLER MATERIALS.**

NOTE

Where permissible, the use of austenitic stainless steel filler metal will help in preventing brittle welds. A ductile weld bead is deposited, but, of course, the hardening of the metal in the HAZ will not be eliminated.

a. Weld filler metals shall be in accordance with the component technical manual or WP 003 04 and Table 1, **FILLER METAL SELECTION** of this work package.

4. **SHIELDING GAS.**

a. Protecting the Root Side of the Weld from Oxidation. The root side of the weld must be protected against oxidation especially in gas-shielded arc welding. Protection with shielding gas is commonly applied. Back-gouging (grinding) of the root and welding from the reverse side of the joint can also be used when permitted by design.

b. Recommended shielding and backing gases for welding stainless steels are listed in Table 2. Specific shielding and backing gases may be provided by technical instructions.

c. Additional information regarding shielding gases may be found in work package 004.

5. **TUNGSTEN.**

a. Refer to WP 004 01 **GAS TUNGSTEN ARC WELDING** for general information about tungsten selection and WP 007 00 **WELDING – GENERAL INFORMATION** for general information about tungsten geometry preparation.

Table 1. Filler Metal Selection

Base Metal	Filler Metal Common Name	Specification Filler Wire Covered Electrode	Remarks
301 302 304 305	308	MIL-R-5031 Class 1 AWS A5.9 ER 308	
		MIL-E-22200 ER 308 AWS A5.4 E308-XX	
303 310 314	308 310	MIL-R-5031 Class 3 AWS A5.9 ER310 AMS 5694	
		MIL-E-22200 Class 3 AWS A5.4 E310-XX AMS 5695	
		MIL-E-22200 AWS A5.4 E308-XX	
		MIL-E-22200 Class 3 AWS A5.4 E310-XX AMS 5695	
316 317	316	MIL-R-5031 Class 4 AWS A5.9 E316	
		MIL-E-22200 AWS A5.4 E316-XX	
321 347 348	347	MIL-R-5031 Class 5 AWS A5.9 ER347 AMS 5680 AMS 5790 (High Ferrite)	
		MIL-E-22200 Class 5 AWS A5.4 E347-XX AMS 5681	

Table 1. Filler Metal Selection (Cont)

Base Metal	Filler Metal Common Name	Specification Filler Wire Covered Electrode	Remarks
403 410 416	309 310 409 410	MIL-R-5031 Class 2 Class 3 AWS A5.9, ER309, ER310, ER410, ER409 AMS 5776	
		MIL-E-22200 Class 2 Class 3 AWS A5.4, E309-XX, E310-XX, E410-XX AMS 5777	
420	420 309 310	MIL-R-5031 Class 2 Class 3 AWS A5.9, E420	*Type 309/310 electrodes can be used if high strength not required.
		MIL-E-22200 Class 2 Class 3 AWS A5.4 E309-XX, E310-XX *See Remarks	
422	410 422	AWS A5.9, ER410, ER422 *See Remarks	Used in elevated temperature service (limit is 1025°F). This material is weldable but selection of filler metal is critical to match elevated temperature strength and creep resistance. *The use of SS410 filler metal for repair welding type SS422 components should be limited to regions under low stress. ** Bohelr Thyssen supplies filler metals MTS 4 for SMAW and MTS 4Si for GTAW that come close to meeting the base metal composition of 422.
		**See Remarks	

Table 1. Filler Metal Selection (Cont)

Base Metal	Filler Metal Common Name	Specification Filler Wire Covered Electrode	Remarks
440 A, B, C, F	309 310	MIL-R-5031 Class 2 Class 3 AWS A5.9 ER309, ER310	* If a softer weld will meet requirements, such as welding for mechanical bond only, type 309/310 electrodes may be used.
		AWS A5.4 E309-XX, E310-XX *See Remarks.	
446	446	AWS A5.9 ER446LMo	
		None	
15-7Mo PH (AISI 632)	PH 15-7Mo PH 15-7Mo VM	AMS 5825 AMS 5812 AWS A5.9 E630	
		17-4 AMS 5827 PH15-7MO WPH15-7MO-VM	
17-4PH	17-4 PH	AMS 5825 AWS A5.9 ER630	E630 may be used dependent on application and weld size, the weld metal may be used as-welded; welded and precipitation heat treat; or welded, solution treat and precipitation hardened.
		AMS 5827	
17-7PH	17-4 PH	AMS 5825 AWS A5.9 ER630	E630 may be used dependent on application and weld size, the weld metal may be used as-welded; welded and precipitation heat treat; or welded, solution treat and precipitation hardened.
		17-7 PH AMS 5827 17-4 PH	
19-9 DL 19-9 DX	19-9WX 19-9WMO	AMS 5782 MIL-R-5031 Class 6	
		MIL-E-16715 Class 19 AMS 5785	

Table 1. Filler Metal Selection (Cont)

Base Metal	Filler Metal Common Name	Specification Filler Wire Covered Electrode	Remarks
AM355	308 309 310 312 *See remarks.	AWS A5.9 ER308 ER309 ER310 ER312	Bar, plate and forgings are normally welded with filler metal in all conditions. Where joint strength is not important any austenitic (18-8) steel filler rod or electrode may be used. Welds which are heat treated to condition SCT/DA approach 100% efficiency and may be obtained with AM355, filler metal. Fusion welding of condition CRT and SCCRT destroys the effect of cold rolling as well as heating above 900°F.
		AWS A5.4 E308-XX E309-XX E310-XX	
AM350	AM350 AM355 308 309	MIL-R-5031 Class 1 (E308) Class 2 (E309) AWS A5.9 ER308 ER309 AMS 5774 AMS 5780	Where high strength is not required 308/309 electrode and filler wire may be used. Heat treated welds having 90-100% joint efficiency in light gage metal can be obtained without filler metal. AM350 or AM355 electrode/wire shall be used for heavier gages.
		AMS 5775 AMS 5781 MIL-E-22200/2, ER308-XX ER309-XX	

Table 2. Recommended Stainless Steel Shielding Gas

WELDING PROCESS	SHIELDING GAS	BACKING GAS
GTAW	Ar Ar + H_2 (tot 20%)(1) Ar + He (tot 70%) Ar + He + H_2(1) Ar + N_2(2)	Ar N_2 N_2 + 10% H_2(1)

(1) Hydrogen-containing mixtures must not be used for welding ferritic, martensitic or duplex stainless steels.
(2) For welding nitrogen-containing austenitic and duplex stainless steels, nitrogen can be added to the shielding gas

6. **TOOLS.**

a. All tools used on or with stainless steel alloys shall be free of any source of carbon, including contaminated grinding wheels, carbon steel fixtures, chains, and wire brushes. Carbon will contaminate stainless steel and detrimentally affect the materials corrosion resistance.

b. Stainless steel has a very thin and stable oxide film rich in chrome. This film reforms rapidly by reaction with the atmosphere if damaged. If stainless steel is not adequately protected from the atmosphere during welding or is subject to very heavy grinding operations, a very thick oxide layer will form. This thick oxide layer, distinguished by its blue tint, will have a chrome depleted layer under it, which will impair corrosion resistance.

c. Both the oxide film and depleted layer must be removed, either mechanically (grinding with a fine grit is recommended, wire brushing and shot blasting will have less effect), or chemically cleaned. Once cleaned, the surface can be chemically passivated to enhance corrosion resistance, (passivation reduces the anodic reaction involved in the corrosion process).

7. **CLEANING.**

a. Welds and the surrounding area should be thoroughly cleaned to avoid impairment of corrosion resistance.

b. Weld spatter, flux, or scale may become focal points for corrosive attack if not properly removed, especially in aggressive environments.

c. The residue from welding should be removed before heat treatment for stress relief or annealing. The discoloration by heat, or heat tint, is not necessarily harmful, but should be removed if the weldment is to serve a decorative purpose. This can be accomplished mechanically by using a mild abrasive cleaner, chemically with a phosphoric acid base cleaner, or electrochemically with commercially available weld-cleaning kits.

8. **JOINT DESIGN.**

a. Edges cut by plasma arc should be smooth and free from gutters or notches and shall have oxides removed. All other edges should be deburred.

b. Carbon arc gouging is not recommended for cutting of stainless steels under any circumstances. All spatter is to be removed and the surface of the parent metal dressed smooth.

c. On thin sheet metal, a square butt joint may be used.

d. If the members being joined are thicker than about 1/8 or 3/16 inch, it is necessary to bevel the edges in order to assure full penetration welds.

9. **WELD TECHNIQUE.**

a. Stringer beads are recommended in preference to weaving in order to keep the heat input to an acceptable level. Where weaving is necessary both the weave width and side dwell time should be kept to a minimum. Interpass temperatures generally should not exceed 150ºC except in the case of martensitic alloys.

b. Breaking the arc in an abrupt manner can result in slag inclusions and shrinkage cracks. Craters should be filled by using a circular motion at the end of the weld followed by a gradual lengthening of the arc to the point of extinguishing it.

c. Preheat of Austenitic Stainless Steel

(1) In general, austenitic stainless steels should not be preheated.

(2) In some cases, preheating could be harmful in causing increased carbide precipitation or greater warpage.

d. Preheat of Martensitic Stainless Steel should be based on the following guide and specific details may be written in the component technical manual:

(1) *Below 0.10%C* — Generally no preheating or heat treating after welding required.

(2) 0.10 to 0.20%C — Preheat to 500F, weld, and cool slowly.

(3) 0.20 to 0.50%C — Preheat to 500F, weld, and heat treat after welding.

(4) Over 0.50%C — Preheat to 500F, weld with high heat input, and heat treat after welding.

10. **STAINLESS STEEL FINISHING.**

There are four basic grinding, blending and finishing steps to produce excellent stainless steel finishes after welding.

a. The first step is to level the weld with a fiber disc, grade 60 or finer, on a right angle grinder. Using a finer grade makes it easier to remove the grind lines later. Take care to minimize the grind area, which can reduce time in subsequent steps. Remember that parallel scratches will be easier to blend during finishing, so always try to align the grind line scratches with the grain line direction of the metal.

b. Set the directional grain pattern with a pneumatic wheel and a grade 120 coated abrasive belt. Feathering on and off the work surface helps to reduce the occurrence of undercuts.

c. To generate a #4 finish, change the belt on the pneumatic wheel to an A-medium surface conditioning abrasive. For a #3 finish, use an A-coarse abrasive instead. An optimum running speed for a 5-in. diameter pneumatic wheel is 1000 rpm. Use a long stroke and try to ease off pressure at both ends of the stroke. A few slow passes should restore the finish.

d. The final finishing step is to blend the transition lines using an abrasive hand pad. To make the finished area look its best, apply a stainless steel cleaner to remove debris, streaks and resist fingerprints.

11. **HEAT TREATMENT / STRESS RELIEF.**

a. Austenitic stainless steels generally do not require post weld heat treatment but may have stress operations when specified by its application.

(1) Stress Relief Annealing: Cold worked parts should be stress relieved at 750°F for 1/2 to 2 hours.

b. Martensitic stainless steels should be post weld heat treat as follows:

(1) Anneal at 1500F or higher followed by controlled cooling to 1100F at a rate of 50 degrees per hour and then air cooling.

(2) Heat to 1350-1400F and follow with controlled cooling to 1100F at a rate of 50 degrees per hour and then air cooling.

ORGANIZATIONAL, INTERMEDIATE AND DEPOT MAINTENANCE

WELDING NICKEL ALLOYS (GROUP III)

Reference Material

Gas Tungsten ARC Welding ..... WP 004 01
Guide for the Joining of Wrought Nickel-Based Alloys ..... AWS G2.1
Specification for Nickel and Nickel-Alloy Bare Welding Electrodes and Rods ..... AWS A5.14
Specification for Nickel and Nickel-Alloy Welding Electrodes for Shielded Metal Arc Welding ..... AWS A5.11
Specification for Weld Shielding Gases AWS ..... AWS A5.32
Surface Preparation for Welding ..... WP 006 01
Welding - General Information ..... WP 007 00

Alphabetical Index

Subject	Page No.
General	2
Safety	2
Material Types	2
Weld Filler Materials	4
Shielding Gas	9
Tungsten	9
Tools	9
Cleaning	9
Joint Design	10
Weld Technique	10
Heat Treatments	11
Post-Weld Heat Treatment Cracking	12
Stress Corrosion Cracking	12

Record of Applicable Technical Directives

None

NOTE

This Work Package contains GUIDANCE information to supplement higher order technical document or instructions.

1. **GENERAL.**

CAUTION

Nickel and nickel alloys are susceptible to embrittlement by lead, sulfur, phosphorus, and other low-melting-point elements. These materials can exist in grease, oil, paint, marking crayons or inks, forming lubricants, cutting fluids, shop dirt, and processing chemicals.

a. Nickel alloys can be joined reliably by all types of welding processes or methods, with the exception of forge welding and oxyacetylene welding. The wrought nickel alloys can be welded under conditions similar to those used to weld austenitic stainless steels. Cast nickel alloys, particularly those with a high silicon content, present difficulties in welding.

b. The most widely employed processes for welding the non-age-hardenable (solid-solution-strengthened) wrought nickel alloys are gas-tungsten arc welding (GTAW), gas-metal arc welding (GMAW), and shielded metal arc welding (SMAW). Although the GTAW process is preferred for welding the precipitation-hardenable alloys, both the GMAW and SMAW processes are also used.

c. The process of precipitation hardening, also called age hardening, is widely used to add strength to metal alloy materials following specific heat treat sequences prior to welding and after welding.

d. Additional information about the cleaning, joint design, welding, filler metal selection, and post weld thermal heat treatments of Nickel Alloys may be found in AWS G2.1, *Guide for the Joining of Wrought Nickel-Based Alloys* detail

2. **SAFETY.**

WARNING

Do not breathe fumes and gases. Keep your head out of the fumes. Use enough ventilation or exhaust at the arc or both to keep fumes and gases from your breathing zone and general area. If ventilation is questionable, use air sampling to determine the need for corrective measures. Keep exposure as low as possible.

3. MATERIAL TYPES.

a. Nickel alloys are the primary materials for gas turbine engines and are required to meet a wide range of temperature and stress application requirements. These alloys exhibit a combination of creep resistance, creep rupture strength, yield and tensile strength over a wide temperature range, resistance to environmental attack (including oxidation, nitridation, sulphidation and carburization), fatigue and thermal fatigue resistance, metallurgical stability and useful thermal expansion characteristics.

b. These properties are exhibited by a series of solid-solution strengthened and precipitation-hardened nickel, iron and cobalt alloys. The properties needed to meet the turbine engine requirements have been achieved by specific alloy additions, by heat treatment and by thermal mechanical processing. A thorough understanding of the metallurgy and metallurgical processing of these materials is imperative in order to successfully fusion weld them.

c. This same basic understanding is required for repair of a component with the added dimension of the potential effects of thermal cycling and environmental exposure the component will have endured in service. This article will explore the potential problems in joining and repair welding these materials.

d. Solid Solution Alloys. Solid solution alloys are pure nickel, Ni-Cu alloys and the simpler Fe-Ni-Cr alloys. These alloys are readily fusion welded, normally in the annealed condition. As the heat affected zone (HAZ) does not harden, heat treatment is not usually required after welding.

e. Precipitation Hardening Alloys. Precipitation hardening alloys include Ni-Cu-Al-Ti, Ni-Cr-Al-Ti and Ni-Cr-Fe-Nb-Al-Ti. These alloys may susceptible to post-weld heat treatment cracking.

f. Table 1 lists some common Nickel, Iron, and Cobalt based alloys and WP 003 04 lists additional alloys and their respective commercial and military specifications.

Table 1 – Common Nickel, Iron and Cobalt Based Alloys

Solid solution nickel base alloys	Precipitation hardenable nickel base alloys	Solid solution iron base alloys	Precipitation hardenable iron base alloys	Solid solution cobalt base alloys
Hastelly N	GMR 235	16-25-6	A286	Haynes 25
Hastelloy S	Inconel 702	17-14 CuMo	Discolloy	Haynes 188
Hastelloy X	Inconel 706	19-9 DL	Haynes 556	S-816
Haynes 230	IN 713C	Incoloy 800H	Incoloy 903	
Inconel 600	IN 738	Incoloy 802	Incoloy 909	
Inconel 601	IN739			
Inconel 617	Inconel718			
Inconel 625	Inconel 722			
	Inconel X-750			
	Incoloy 901			
	M252			
	Rene 41			
	Udimet 700			
	Waspalloy			
	Haynes214			

4. **WELD FILLER MATERIALS.**

a. Nickel alloys are commonly identified by Trade Names and when selecting a filler metal for welding, the filler metal should have the same trade marked name.

b. AWS A5.14 or A5.11 provides more information regarding the designations and applications of nickel welding wire and should be consulted when selecting nickel alloy filler metals.

c. Table 2 provides a quick reference to common aviation nickel-based alloys with corresponding filler metal specifications for Filler Wire and Covered Electrodes.

Table 2. Filler Metal Selection

Base Metal	Filler Metal Common Name	Specification Filler Wire Covered Electrode	Notes
Inconel 600 IN 600	Inconel 62 Inconel 92	MIL-R-5031, Class 8A AMS 5679 AWS A5.14 ERNiCrFe-5 UNS N07062 MIL-R-5031 Class 8 AMS 5683 AWS A5.14 ERNiCrFe-6 UNS N07092	This alloy is readily weld-able with high joint efficiency. Inconel ”62” welding wire is recommended for inert gas method and tungsten arc. Inconel “92” is recommended where inert gas is not used. When gas welding a slight reducing flame should be used.
Inconel 625 IN 625	Inconel 625 IN 625	AMS 5837 AWS A5.14 ERNiCrMo-3 UNS N06625	Alloy is readily welded by the gas shielded arc processes with either a tungsten electrode (GTAW) or a consumable electrode (GMAW) of Inconel filler metal 625.
Inconel 718 IN 718	Inconel 718 INI 718	AMS 5832 AWS A5.14 ERNiFeCr-2 UNS N07718	The alloy may be welded in the annealed or aged condition. If welded in the aged condition the heat affected zone will be softer than that of the parent metal.

Table 2. Filler Metal Selection (Cont)

Base Metal	Filler Metal Common Name	Specification Filler Wire Covered Electrode	Notes
Inconel "X"	Inconel 69 IN 69 RN 69	MIL-R-5031 Class 14 AWS A5.14 ERNiCrFe-7 ERNiCrFe-7A UNS N06052 AWS A5.14 ERNiCrFe-8 UNS N07069	This alloy can be fusion welded by various methods and resistance welded. Fusion welding of Inconel X should be confined to annealed or cold worked material. The tungsten arc & gas shielded methods using Inconel X welding wire can be used to weld these conditions. Welding of aged material without cracking is only possible by the safe end method of adding Inconel X sections before heat treating and then welding the safe ends together with Inconel.
Hastelloy C	Hastelloy C	MIL-R-5031 Class 11 MIL-R-5031 Class 12 (*See remarks) MIL-R-5031 Class 3 (*See Remarks)	Alloy can be welded by all conventional methods. However, the oxyacetylene method is not recommended for parts to be used in corrosive applications because of carbon pickup. Weldability of this alloy is similar to that of austenitic stainless steel. The following measures are required for fusion welding: a. Keep weld restraint at a minimum. b. Hold heat affected zone narrow and parent metal as cool as possible when welding wrought products.

Table 2. Filler Metal Selection (Cont)

Base Metal	Filler Metal Common Name	Specification Filler Wire Covered Electrode	Notes
			c. Maintain alignment. d. Use string beads. The same analysis filler metal should be used to join two pieced of the alloy. Type 310 stainless or Hastelloy W (wire or electrode) are recommended for joining other metals.
PK-33	PK-33 Nimonic 33	MSRR 9500/201 PK-33 (*See Remarks)	The commonly used welding methods work well with this alloy. Matching alloy filler metal should be used. If matching alloy is not available then the nearest alloy richer in the essential chemistry (Ni, Co, Cr, Mo) should be used. All weld beads should be slightly convex. It is not necessary to use preheating. Surfaces to be welded must be clean and free from oil, paint or crayon marking. The cleaned area should extend at least 2" beyond either side of a welded joint. Gas-Tungsten Arc Welding: DC straight polarity (electrode negative) is recommended. Keep as short an arc length as possible and use care to keep the hot end of filler metal always within the protective atmosphere. * Weld Filler metal must meet chemistry PK-33 (MSRR 9500/201).
		NONE	

Table 2. Filler Metal Selection (Cont)

Base Metal	Filler Metal Common Name	Specification Filler Wire Covered Electrode	Notes
C263	C263	MSRR 9500/16 AMS 5966 AMS 5872 (*See Remarks) AMS 5886 (*See Remarks)	* Weld Filler Metal must meet chemistry of specifications listed.
		NONE	
Hastelloy X	Hastelloy X	AMS 5798 AWS A5.14 ERNiCrMo-2 UNS N06002 MSRR 9500/216	Alloy can be welded by most common welding methods. Fusion welding of cold worked material will result in a weld strength equal to that of annealed metal. Fusion welding may be accomplished by metallic arc, inert gas shielded arc, submerged melt and sigma methods. Welding should be done in a flat position as fluidity as the alloy makes position welding difficult. Welds in this alloy retain good ductility. Resistance welding requires special control; long dwell times with water cooling are recommended to avoid coring or crystal segregation and to develop a full nugget. For seam welding an intermittent drive is recommended to prevent cracking and excessive distortion.
		AMS 5799 AWS A5.11 ENiCrMo-2 UNS W86002	
RENE 41	RENE 41 Hastelloy	AMS 5800 MIL-R-5031 CL 12 MSRR 9500/241 AWS A5.14 ERNiMo-3 UNS N10004 UNS N07041	Alloy can be fusion welded if copper and gas backing with a tight hold down is used. Start and finish should be made on metal tabs of the same thickness using inert gas atmosphere of 2 parts

Table 2. Filler Metal Selection (Cont)

Base Metal	Filler Metal Common Name	Specification Filler Wire Covered Electrode	Notes
			Helium to 1 part Argon. This reduces the current input which should be held as low as possible. The use of the tab reduces heat input which should be held as low as possible to minimize the heat affected zone. Following the torch with a water spray reduces the hardness and produces maximum ductility in the weld and weld affected zones. The commonly used welding methods work well with this alloy. Matching alloy filler metal should be used. If matching alloy is not available then the nearest alloy richer in the essential chemistry (Ni, Co, Cr, Mo) should be used. All weld beads should be slightly convex. It is not necessary to use preheating. Gas-Tungsten Arc Welding: DC straight polarity (electrode negative) is recommended. Keep as short an arc length as possible and use care to keep the hot end of filler metal always within the protective atmosphere.
Invar 36 Invar 42 Kovar	Invar 36 (64Fe-36Ni) Invar 42 (58Fe-42Ni)	NiLo CF36™ NiLo 42™ AWS A5.9 308L AWS A5.14 FM 82 ERNiCr-3	Caution must be taken so as not to overheat the molten metal. This will avoid spattering of the molten metal and pits in the welded area. When welding with rod, it is

Table 2. Filler Metal Selection (Cont)

Base Metal	Filler Metal Common Name	Specification	Notes
		Filler Wire / Covered Electrode	
	Kovar AMS-I-23011 (54Fe-17Cr-29Ni)	AWS A5.11 ENiCrFe-3 8N12 (IN 600)	essential that the rod be of the same composition if similar properties in the weld are desired; otherwise mild steel rods or 18-8 stainless steel (308L) rods may be employed.

5. **SHIELDING GAS.**

a. Primary shielding gas shall be Argon with a purity of 99.996% equivalent to AWS A5.32.

b. Backup gas shall be used on base metal thicknesses up to 3/16-inch. Maximum 10 CFH.

6. **TUNGSTEN.**

a. Refer to WP 004 01 **GAS TUNGSTEN ARC WELDING** for general information about tungsten selection and WP 007 00 **WELDING – GENERAL INFORMATION** for general information about tungsten geometry preparation.

b. The preferred tungsten electrode shall be 1.5% Lanthanum tungsten.

7. **TOOLS.**

a. Nickel and nickel alloys should be cleaned with a stainless steel wire brush. All cleaning tools including wire brushes and carbide grinding tools should be clean and free of debris or other metal fragments. Stainless steel brushes should be marked for the alloy use and kept isolated from other metal contact.

8. **CLEANING.**

a. Refer to Work Package 006 01 **SURFACE PREPARATION FOR WELDING** for specifics related to solvent cleaning Nickel and Nickel based alloys.

b. Common sources of the contaminating elements sulfur and phosphorus are marking crayons, paints, temperature indication markers, cutting fluids, oil and grease. Oil- or grease-base contaminants must be removed by solvent cleaning. Acceptable methods include immersion in, swabbing with or spraying with alkaline, emulsion, solvent or detergent cleaners or a combination of these; by vapor degreasing; by steam, with or without a cleaner; or by high-pressure water jetting.

c. A typical procedure to remove oil or grease prior to welding includes:

- remove excess contamination by wiping with clean lint-free cloth

- swab the weld area (at least 2 inches on each side of the weld) with acetone. Use only clean acetone (uncontaminated with acid, alkali, oil or other foreign material) and clean lint-free cloths
- check to assure complete cleaning. A residue or smut on the drying cloth can indicate incomplete cleaning.

d. Weld surfaces may need an additional level of cleanliness to remove the final layers of oxidation and a nickel etchant is advised.

9. **JOINT DESIGN.**

a. Nickel alloys have a high thermal conductivity and purity that makes welding penetration lower than Stainless Steel.

b. Due to the sluggish nature of the weld puddle the weld joint design should be opened slightly larger than for stainless steel.

c. Bevel the weld joint when the thickness of the base metal exceeds 0.03 inch, otherwise, a square groove is satisfactory.

d. Argon backing gas is absolute and should not exceed 10 CFH.

10. **WELD TECHNIQUE.**

a. Nickel alloys are normally welded in the solution-treated condition. Precipitation-hardenable (PH) alloys should be annealed before welding if they have undergone any operations that introduce high residual stresses.

b. Minimizing Weld Defects. The defects and metallurgical difficulties encountered in the arc welding of nickel include:

- Porosity
- Susceptibility to high-temperature embrittlement by sulfur and other contaminants
- Cracking in the weld bead, caused by high heat input and excessive welding speeds
- Stress-corrosion cracking in service.

(1) Porosity. Oxygen carbon dioxide, nitrogen, or hydrogen can cause porosity in welds. In the SMAW process porosity can be minimized by using electrodes that contain deoxidizing or nitride forming elements, such as aluminum and titanium. These elements have a strong affinity for oxygen and nitrogen and form stable compounds with them. Presence of deoxidizers in either type of electrode serves to reduce porosity. In addition, porosity is much less likely to occur in chromium-bearing nickel alloys than in non-chromium-bearing alloys.

(a) In the GMAW and GTAW processes, porosity can be avoided by preventing the access of air to the molten weld metal. Gas backing on the underside of the weld is sometimes used. In the GTAW process the use of argon with up to 10% H_2 as a shielding gas helps to prevent porosity.

(b) Bubbles of hydrogen that form in the weld pool gather the diffusing hydrogen. Too much hydrogen (>15%) in the shielding gas can result in the hydrogen porosity.

(2) Cracking. Hot shortness of welds can result from contamination by sulfur, lead, phosphorus, cadmium, zinc, tin, silver, boron, bismuth, or any other low-melting-point elements, which form intergranular films and cause

severe liquid-metal embrittlement at elevated temperatures. Many of these elements are found in soldering and brazing filler metals.

(3) Hot cracking of the weld metal usually results from such contamination. Cracking in heat-affected zone is often caused by intergranular penetration of contaminants from the base-metal surface. Sulfur, which is present in most cutting oils used for machining, is a common cause of cracking in nickel alloys.

(a) Weld metal cracking also can be caused by heat input that is too high, as a result of high welding current and low welding speed. Welding speeds have a large effect on the solidification pattern of the weld.

(b) High welding speeds create a tear-drop molten weld pool, which leads to uncompetitive grain solidification at the center of the weld. At the weld centerline, residual elements will collect and cause centerline hot cracking or lower transverse tensile properties.

(c) In addition, cracking may result from undue restraint. When conditions of the high restraint are present, as in circumferential welds that are self-restraining, all bead surfaces should be slightly convex. Although convex beads are virtually immune to centerline splitting, concave beads are particularly susceptible to centerline cracking. In addition, excessive width-to-depth or depth-to-width ratios can result in cracking may be internal (that is surface cracking).

(4) Stress Corrosion Cracking. Nickel and nickel alloys do not experience any metallurgical changes, either in the weld metal or in the HAZ, that affects normal corrosion resistance. When the alloys are intended to contact substances such as concentrated caustic soda, fluorosilicates, and some mercury salts, however, the welds may need to be stress relieved to avoid stress corrosion cracking. Nickel alloys have good resistance to dilute alkali and chloride solutions. Because resistance to stress-corrosion cracking increases with nickel content, the stress relieving of welds in the high-nickel-content alloys is not usually needed.

(a) Effect of slag on weld metal. Because fabricated nickel alloys are ordinarily used in high-temperature service and in aqueous corrosive environments, all slag should be removed from finished weldments.

(b) If slag is not removed in these type of application, then crevices and accelerated corrosion can result. Slag inclusions between weld beads reduce the strength of the weld. Fluorides in the slag can react with moisture or elements in the environment to create highly corrosive compounds.

(5) Heat input during the welding operations should be held to a moderately low level in order to obtain the highest possible joint efficiency and minimize the extent of the HAZ. For multiple-bead or multiple-layer welds, many narrow stringer beads should be used, rather than a few large, heavy beads. Any oxides that form during welding should be removed by abrasive blasting or grinding. If such films are not removed as they accumulate on multiple-pass welds, then they can become thick enough to inhibit weld fusion and produce unacceptable laminar type oxide stringers along the weld axis.

11. **HEAT TREATMENTS / STRESS RELIEF.**

a. Before welding these alloys, a full-solution anneal is usually performed. After welding, the appropriate aging heat treatment is performed. To further improve alloy properties, a full anneal after welding, followed by a postweld heat treatment, can be incorporated in the welding procedure.

b. Re-solution and precipitation (aging) treatment should immediately follow welding as required.

12. **POST-WELD HEAT TREATMENT CRACKING.**

a. This is also known as strain-age or reheat cracking. It is likely to occur during post-weld ageing of precipitation hardening alloys but can be minimized by pre-weld heat treatment. Solution annealing is commonly used but over-ageing gives the most resistant condition. Alloy 718 alloy was specifically developed to be resistant to this type of cracking.

13. **STRESS CORROSION CRACKING.**

a. Welding does not normally make most nickel alloys susceptible to weld metal or HAZ corrosion. However, when the material will be in contact with caustic soda, fluosilicates or HF acid, stress corrosion cracking is possible.

b. After welding, the component or weld area must be given a stress-relieving heat treatment to prevent stress corrosion cracking.

ORGANIZATIONAL, INTERMEDIATE AND DEPOT MAINTENANCE

WELDING ALUMINUM ALLOYS (GROUP IV)

Reference Material

Gas Tungsten ARC Welding ..... WP 004 01
Specification for Bare Aluminum and Aluminum-Alloy Welding Electrodes and Rods ..... AWS A5.10
Welding - General Information ..... WP 007 00

Alphabetical Index

Subject	Page No.
Cleaning	4
General	2
Heat Treatment / Stress Reliefs	6
Joint Design	4
Material Types	2
Safety	2
Shielding Gas	2
Tools	4
Tungsten	2
Weld Filler Materials	2
Weld Technique	6

Record of Applicable Technical Directives

None

NOTE

This Work Package contains GUIDANCE information to supplement higher order technical document or instructions.

1. **SAFETY.**

a. Refer to WP 002 for safety requirements.

2. **GENERAL.**

a. Aluminum and aluminum alloys can be satisfactorily welded by GTAW and GMAW welding processes. The principal advantage of using arc-welding processes is that a highly concentrated heating zone is obtained with the arc and, for this reason, excessive expansion and distortion of the metal are prevented.

b. The prevention or minimization of porosity greatly depends on the attention to detail of base metal cleanliness, increased groove angle of the joint design and preparation, and the proper shielding gas coverage, including backup shielding gas coverage.

3. **MATERIAL TYPES.**

a. Acceptable Aluminum Alloys (Group IV) is found in Work Package series 003 and should be consulted prior to welding.

b. Alloys not listed may be welded provided sufficient engineering concurrence is attained.

c. Specific welding instructions may be provided and take precedence over this general series manual.

4. **WELD FILLER MATERIALS.**

a. Table 1 lists some examples of weld filler metals, for Gas Tungsten Arc welding of various aluminum alloys and is not all inclusive.

b. Refer to AWS A5.10, *Specification for Bare Aluminum and Aluminum-Alloy Welding Electrodes and Rods*, which contains a comprehensive table of filler metal choices.

5. **SHIELDING GAS.**

a. Usually, 100 percent argon gas is preferred for aluminum GTAW, but when working with thicker materials, such as 1/2 inch or greater, add helium in the range of 25 to 50 percent. Helium makes the arc hotter and provides for more penetration.

6. **TUNGSTEN.**

a. Refer to WP 004 01 **GAS TUNGSTEN ARC WELDING** for general information about tungsten selection and WP 007 00 **WELDING – GENERAL INFORMATION** for general information about tungsten geometry preparation.

Table 1. Suggested Filler Material for Various Aluminum Alloys[1]

Base Metal	Filler Alloys AWS A5.10[5]	
	Preferred for Maximum As-Welded Tensile Strength	Alternate Filler Alloys For Maximum Elongation
1350	1100	1350/4043
1100	4043/1100	1100
2014	4145	4043/2319[4]
2024	4145	4043/2319[4]
2219	2319/4145	2319[4]
3003	5356	1100/4043
3004	5554	5356
5005	5356/4043	5356
5050	5356	5356
5052	5356	5653
5083	5183	5183
5086	5356/5183	5183
5154	5356	5356
5357	5554	5356
5454	5554	5356
5456	5556	5356
6061	4041/5356[2]	5356[3]
6063	4043/5356[2]	5356[3]
7005	5356	5356
7039[3]	5356	5356

(1) The above table shows recommended choices of filler alloys for welds requiring maximum mechanical properties. Selected alloys are based on tests conducted by Kaiser Aluminum. Different filler metals may be required for special service, such as immersion in fresh or salt water, hydrogen peroxide and certain other chemical exposures or sustained elevated temperatures (above 150°F). Plate materials containing over 3% magnesium should not be used for prolonged service above 150°F. Weld metal which has been cold worked by forming or other means should not be used for prolonged service above 150°F. For all special services of welded aluminum, inquiry should be made of your supplier.
(2) When making welded joints in 6061 or 6063 electrical conductor in which maximum conductivity is desired, use 4043 filler metal. However, if strength and conductivity both are required, 5356 filler may be used and the weld reinforcement increased in size to compensate for the lower conductivity of the 5356 filler metal.
(3) For armor plate only.
(4) Low ductility of weldment is not appreciably affected by filler used. Plate weldments in these base metal alloys generally have lower elongations than those of other alloys listed in this table.
(5) Equivalent AMS specifications are rolled into the AWS A5.10 specifications.

b. Preparing the tungsten for welding aluminum differs from the other alloys because of the Alternating Current (AC) and the way the tungsten is heated during the AC cycle.

c. For best results, start with a blunt tip and a large diameter electrode for a small diameter tungsten electrode will eventually produce tungsten spits in the weld bead creating a defect. Figure 1 describes the “balling” of the tungsten for welding aluminum.

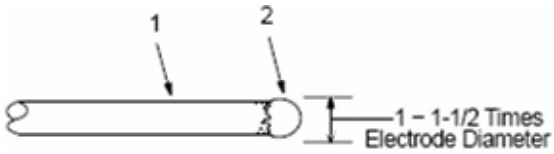

1 Tungsten Electrode
2 Balled End
Ball end of tungsten by applying AC amperage recommended for a given electrode diameter.
Let ball on end of the tungsten take its own shape.

Figure 1. Preparing Tungsten for Welding Aluminum

7. **TOOLS.**

a. Handheld, toothbrush-type stainless steel wire brushes are preferred for use prior to welding.

b. Carbide rotary burrs are recommended for removing heavier scale or oxidation of aluminum and should have sharp cutting edges. Worn or chipped rotary tools should be replaced and not used for preparing aluminum prior to welding.

c. Refer to WP 006 Series for additional information.

8. **CLEANING.**

a. Specific cleaning may be required per engineering or component technical instructions and should be followed.

b. Aluminum must be clean to remove sources of hydrogen such as lubricants or hydrated oxides, or, in the case of the shielding gas, the presence of hydrogen in the form of moisture which may be from the gas or aspiration from defective gas lines or couplings.

(1) Because of the high solubility of hydrogen and aluminum, gas bubble formation increases and forms gas pores which remain in the weld metal upon solidification.

(2) Once a gas bubble forms in the molten weld, natural buoyancy may expel the gas and the welding position and parameters may alter the amount of porosity found in a weld bead.

b. Refer to WP 006 01 for suggested cleaning requirements prior to welding.

9. **JOINT DESIGN.**

a. In general, the design of welded joints for aluminum is quite consistent with that for steel joints. However, because of the higher fluidity of aluminum under the welding arc, some important general principles should be kept in mind. In the lighter gages of aluminum sheet, less groove spacing is advantageous when weld dilution is not a factor.

b. Plate edge preparation.

(1) The controlling criterion is joint preparation. A special design V-groove that is applicable to aluminum is shown in Figure 2. This type of joint is excellent where welding can be done from one side only and where a smooth, penetrating bead is desired. The effectiveness of this particular design depends upon surface tension and should be applied on all material thicknesses over 1/8 inch. The bottom of the special V-groove must be wide enough to contain the root pass completely. This necessitates adding a relatively large amount of filler alloy to fill the groove, but it results in excellent control of penetration and sound root pass welds. This edge preparation can be employed for welding in all positions with elimination of difficulties due to burn through or over penetration in the overhead and horizontal welding positions. It is applicable to all weldable base alloys and all filler alloys.

(2) Before welding, the surface of the aluminum should be carefully cleaned and if the casting is heavy, the crack should be tooled out to form a V-groove.

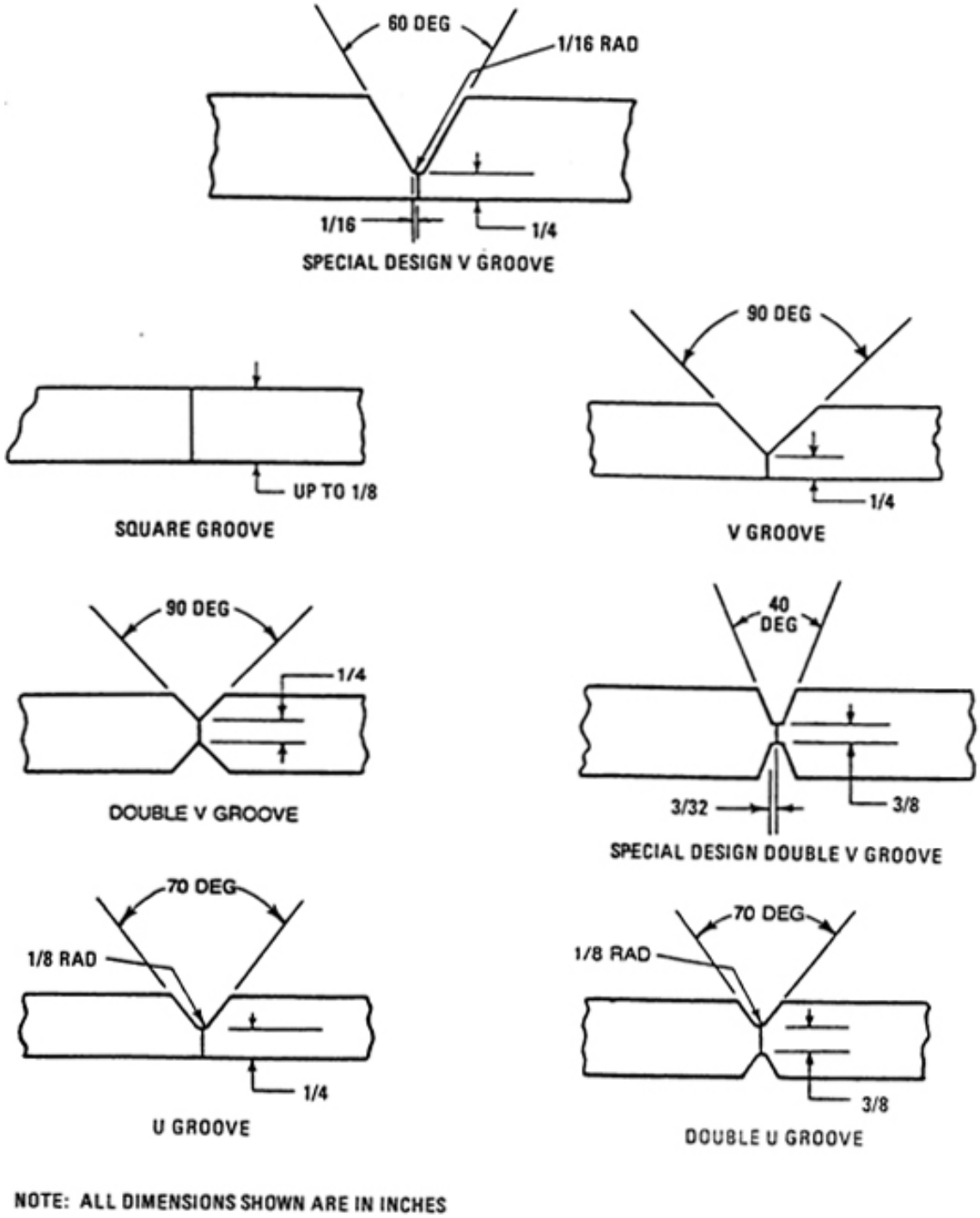

Figure 2. Joint Design for Aluminum

10. **WELD TECHNIQUE.**

a. Preheating Aluminum

(1) In gas shielded arc welding of aluminum alloys, preheating parts to be welded is normally done only when the temperature of the parts is below 32°F or when the mass of the parts is such that the heat is conducted away from the joint faster than the welding process can supply it.

(2) Preheating may be advantageous for GTAW with alternating current of parts thicker than about 3/16 inch and GMAW of parts thicker than about 1 inch. Gas tungsten arc welding with DCEP is limited to thin material, and preheating is not necessary with this process.

(3) Thick parts also should not be preheated when GTAW using DCEN, because of the high heat input provided to the work.

(4) Preheating can also reduce production costs because the joint area reaches welding temperature faster, thus permitting higher welding speeds.

(5) Various methods can be used to preheat the entire part or assembly to be welded, or only the area adjacent to the weld can be heated by use of a gas torch. In mechanized welding, local preheating and drying can be done by gas or tungsten arc torches installed ahead of the welding electrode.

(6) The preheating temperature depends on the job. Often 150°F is sufficient to ensure adequate penetration on weld starts, without readjustment of the current as welding progresses.

(7) Preheating temperature for wrought aluminum alloys seldom exceeds 300°F, because the desirable properties of certain aluminum alloys and tempers may be adversely affected at higher temperatures.

(8) Aluminum-magnesium alloys containing 4.0 to 5.5% Mg (5083, 5086, and 5456) should not be preheated to more than 200°F, because their resistance to stress corrosion cracking is reduced.

(9) Large or intricate castings may be preheated to minimize thermal stresses and to facilitate attainment of the welding temperature.

(10) After welding, such castings should be cooled slowly to minimize the danger of cracking. Castings that are to be used in the heat treated condition should be welded before heat treatment or should be reheat treated after welding.

(11) Preheating and the heat of welding may affect the corrosion resistance of some alloys unless welding is followed by heat treatment.

11. **HEAT TREATMENTS / STRESS RELIEF.**

a. Aluminum castings that have been heat treated should not be welded unless facilities for reheating after welding are available.

b. Large castings or those of an intricate design should be preheated slowly and uniformly in a suitable furnace to between 500° and 700°F (260° and 371°C). Small castings or those with thin sections may be preheated with a torch.

ORGANIZATIONAL, INTERMEDIATE AND DEPOT MAINTENANCE

WELDING MAGNESIUM ALLOYS (GROUP V)

Reference Material

Base Metals Group ..... WP 003 04
Gas Tungsten ARC Welding ..... WP 004 01
Specification for Magnesium Welding Electrodes and Rods ..... AWS A5.19
Surface Preparation for Welding ..... WP 006 01
Welding - General Information ..... WP 007 00

Alphabetical Index

Subject	Page No.
Cleaning	6
Heat Treats/ Stress Relief	9
Joint Design	6
Magnesium Surface Treatments	10
Material Types	2
Safety	2
Shielding Gas	5
Tools	6
Tungsten	5
Weld Filler Materials	2
Weld Technique	7
Gas Tungsten Arc Welding Magnesium	7
Spot Welding Magnesium	7
Cleaning For Spot Welding	8
Machine Settings	8
Pressure	9

Record of Applicable Technical Directives

None

NOTE

This Work Package contains GUIDANCE information to supplement higher order technical document or instructions.

1. **SAFETY.**

WARNING

Magnesium is a highly oxidizable material and when in the form of machined turnings or powders, if ignited, will burn with dangerous intensity.

2. **MATERIAL TYPES.**

a. Refer to Work Package 003 04, **BASE METALS GROUPS**, for a list of weldable magnesium alloys (Group V).

b. For magnesium alloys not listed, contact the appropriate cognizant engineering authority for additional information regarding welding operations.

3. **WELD FILLER MATERIALS.**

a. Welding filler metals for magnesium should be obtained or cross-referenced with AWS A5.19, *Specification for Magnesium Welding Electrodes and Rods*.

b. Tables 1, 2, 3 and 4 list the acceptable combinations of joining wrought or cast magnesium alloys.

c. Table 5 lists common magnesium filler metals.

Table 1. Welding Rods for Joining Wrought to Wrought Alloy (Magnesium)

BASE ALLOY	A3A	AZ31B	AZ61A	AX80A	HK31A	HM31A	ZK21A	ZK60A&B
A3A	1							
AZ31B	1	1						
AZ61A	1	1	1					
AZ80A	1	1	1	1				
HK31A	1	1	1	1	2			
HM21A	1	1	1	1	2	2		
HM31A	1	1	1	1	2	2	2	
ZK21A	1	1	1	1	1	1	1	1
ZK60A, B	X	X	X	X	X	X	X	X

CODE
1 = Use AZ92A or AZ61A rod - AZ92A preferred. AZ61A cheaper, generally satisfactory, but subject to weld cracking.
2 = Use EZ33A rod, particularly when two alloys for elevated temperature use are to be welded. Use AZ92A or AZ61A when elevated and room temperature alloy are welded together.
X = Welding not recommended.

Table 2. Welding Rods for Joining Cast to Wrought Alloys (Magnesium)

CAST ALLOY	A3A	AZ31B	AZ61A	AZ80A	HK31A	HM21A	HM31A	ZK21A	AZ60A&B
AZ63A	X	X	X	X	X	X	X	X	X
AZ81A	1	1	1	1	1	1	1	1	X
AZ91C	1	1	1	1	1	1	1	1	X
AZ92A	1	1	1	1	1	1	1	1	X
EZ33A	1	1	1	1	2	2	2	1	X
HK31A	1	1	1	1	2	2	2	1	X
HZ32A	1	1	1	1	2	2	2	1	X
KIA	1	1	1	1	1	1	1	1	X
QE22A	1	1	1	1	2	2	2	1	X
ZE41A	1	1	1	1	1	1	1	1	X
ZH62A	X	X	X	X	X	X	X	X	X
ZK51A	X	X	X	X	X	X	X	X	X

CODE
1 = Use AZ92A or AZ61A rod - AZ92A preferred. AZ61A cheaper, generally satisfactory, but subject to weld cracking.
2 = Use EZ33A rod, particularly when two alloys for elevated temperature use are to be welded. Use AZ92A or AZ61A when elevated and room temperature alloy are welded together.
X = Welding not recommended.

Table 3. Welding Rods for Joining Cast to Cast Alloys (Magnesium)

CAST ALLOYS	AZ63A	AZ81A	AZ91C	AZ92A	EZ33A	HK31A	HZ32A	KIA	QE22A	ZE41A	ZH62A ZK51A
AZ63A	1										
AZ81A	X	1									
AZ91C	X	1	1								
AZ92A	X	1	1	1							
EZ33A	X	1	1	1	2						
HK31A	X	1	1	1	2	2					
HZ32A	X	1	1	1	2	2	2				
KIA	X	1	1	1	1	1	1	2			
QE22A	X	1	1	1	2	2	2	1	2		
ZE41A	X	1	1	1	1	1	1	1	1	2	
ZH62A	X	X	X	X	X	X	X	X	X	X	X
ZK51A	X	X	X	X	X	X	X	X	X	X	X

CODE
1 = Use AZ92A or AZ61A rod - AZ92A preferred. AZ61A cheaper, generally satisfactory, but subject to weld cracking.
2 = Use EZ33A rod, particularly when two alloys for elevated temperature use are to be welded. Use AZ92A or AZ61A when elevated and room temperature alloy are welded together.
X = Welding not recommended.

Table 4. Welding Filler Metal for Magnesium Alloys

ALLOY	AZ31B AZ31C	AZ61A	AZ63A	AZ80A	AZ81A	AZ91C	AZ92A	EZ33A	HK31A	HM21A	HM31A	K1A	QE22A	ZE41A	ZK21A	ZH62A ZK51A ZK60A ZK61A
AZ31B AZ31C	A															
AZ61A	A	A														
AZ63A	x	x	B													
AZ80A	A	A	x	A												
AZ81A	1	1	x	1	B											
AZ91C	1	1	x	1	1	B										
AZ92A	1	1	x	1	1	1	2									
EZ33A	1	1	x	1	1	1	1	3								
HK31A	1	1	x	1	1	1	1	3	3							
HM21A	1	1	x	1	1	1	1	3	3	3	3					
HM31A	1	1	x	1	1	1	1	3	3	3	3					
HZ32A	1	1	x	1	1	1	1	3	3	3	3					
K1A	1	1	x	1	1	1	1	3	3	3	3	3				
QE22A	1		x					3	3	3	3	3	3			
ZE41A			x					3	3	3	3	3	3	3		
ZK21A	A	A	x	A	1	1	1	1	1	1	1	1	1	1	A	
ZH62A ZK51A ZK60A ZK61A	x	x	x	x	x	x	x	x	x	x	x	x	x	x	x	3

Code:
A - AZ92A or AZ61A
B - AZ101A or AZ92A
X = Welding not recommended.

1 - AZ92A - Use AZ92A or AZ61A when elevated and room temperature alloy are welded together
2 – AZ101A
3 – EZ33A - EZ33A rod used when two alloys for elevated temperature use are to be welded

Table 5. Magnesium Filler Metal Specification

Common Name	Composition	Welding Filler Material	Specification
AZ61A	6Al 1Zn	R-AZ61A	AMS 4350 MIL-R-6944 AWS A5.19
AZ92A	9Al 2Zn	R-AZ92A	AMS 4395 MSRR 9500/51 AWS A5.19
AZ101A	10Al-1Zn	R-AZ101A	AWS A5.19
EZ33A	3.3Ce 2.5Zn .7Zr	R-EZ33A	AMS 4396 MSRR 9500/50 MIL-R-6944 AWS A5.19

4. **SHIELDING GAS.**

a. Shielding gases for welding thin sections of magnesium is generally with 100% Argon. The addition of Helium or 100% Helium may be used when welding relatively thicker sections of magnesium. Refer to specific welding instructions when welding thicker magnesium.

b. Table 6 lists the recommended shielding gases for magnesium. When welding with 100% Helium, the Flowmeter should adjusted for twice the flow rate than prescribed for aluminum of the same thickness.

Table 6. Shielding Gases for Magnesium

Shielding Gas	Percent Mixture
Argon (Ar)	100 %
Helium – Argon (He-Ar)	75%He – 25%Ar
Helium	100 % (for heavier thicknesses and twice the flow of Argon)

5. **TUNGSTEN.**

a. Refer to WP 004 01 **GAS TUNGSTEN ARC WELDING** for general information about tungsten selection and WP 007 00 **WELDING – GENERAL INFORMATION** for general information about tungsten geometry preparation.

6. **TOOLS.**

WARNING

Use caution when blending magnesium, as fine metal particles will burn quickly and violently. Abrasive tools shall not be allowed to ride on the metal without cutting, as frictional heat can ignite any fine metal that is scraped off. The tool shall be backed off as soon as the cut is finished. Cutting tools shall be kept sharp and ground with sufficient rake clearance to minimize rubbing on the end and sides of the tool. Keep work area clean and do not permit flammable materials, open flames or sparks in area. Operator clothing shall be flame-retardant, easily removable, and kept clean and dust-free. Clothing shall be smooth and have no pockets or cuffs, allowing dust to be brushed off readily. A Class D fire extinguisher or sand with a shovel or scoop to extinguish fires shall be within easy reach in labeled, covered containers.

a. Blending magnesium involves tools that are sharp, clean and specifically identified for magnesium.

b. Control of iron, nickel, and copper must be adhered with to prevent isolated cathodic cases of corrosion, especially unprotected magnesium.

c. The use of high purity alumina sanding disks may be used with caution, preventing the accumulation of magnesium particles.

d. GROUND CLAMPS. The ground cable clamps should be firmly clamped to the workpeice on an area surface that is completely cleaned to bright metal.

7. **CLEANING.**

a. All oils, grease, and other hydrocarbons must be removed prior to welding. Refer to Work Package 006 01 **SURFACE PREPARATION FOR WELDING** for additional cleaning recommendations.

b. The intended weld zone must be cleaned of anodize or oxidation by either mechanical or chemical methods. The tool used for preparing the weld zone in addition to scraping and stainless steel wire brushing is the most common methods.

c. Scraping the edges provides the best surfaces for welding and should be used whenever possible.

8. **JOINT DESIGN.**

a. Joints designs for aluminum may be used when welding magnesium. The included angle of a bevel groove is normally increased for a similar design with carbon steel. The increase in angle is for the wettability of the magnesium to adequately fuse the weld bead with the base metal.

b. When preparing a crack in magnesium, care should adhered with that a wide groove angle, such as that from a rotary carbide burr, will allow wetting the adjacent surfaces to prevent overlapping of the weld bead. Too large of a prepared groove may introduce undercutting.

9. **WELD TECHNIQUE.**

10. **GAS TUNGSTEN ARC WELDING MAGNESIUM.**

a. Magnesium, although melts at a temperature close to aluminum, requires less amperages than welding aluminum alloys of similar thicknesses.

b. The recommended preheat and interpass temperatures for various common aviation magnesium alloys are listed in Table 7. Specific instruction obtained from the cognizant engineering instructions may differ from Table 7 and in case of a conflict between Table 7 and engineering instructions, engineering instructions shall take precedence.

b. Bead face contour should be slightly convex or flat. If the bead face becomes slightly concave after considerable welding time, it means the work heat level is too high. Overheating the magnesium reduces base metal strength, especially with high tensile-type magnesium. This may occur when the weld deposition is too large for a given work piece.

c. Excessive brittleness of the heat-affected-zones (HAZ) and welds is caused by NOT preheating the weld joint or the weld beads are too small. Small weld beads cool quickly when deposited on heavier magnesium parts.

Table 7. Recommended Preheat/Interpass Temperatures

Magnesium Alloy	Preheat/Interpass Temperature (Min/Max)
QE22A	300°F-400°F
EZ33A	
AZ63A	400°F -500°F
AZ91C	
AZ92A	

11. **SPOT WELDING MAGNESIUM.**

a. Magnesium can be joined by spot, seam, or flash welding but spot welding is the most widely used. Spot welding is used mostly on assemblies subject to low stresses and on those not subjected to vibration. The welding of dissimilar alloys by the spot welding process should be avoided, especially if they are alloys with markedly different properties.

b. Welding Current. Either alternating current or direct current can be used for spot welding magnesium. High currents and short weld duration are required, and both alternating current and direct current spot welders have sufficient capacity and provide the control of current that is necessary in the application of this process.

c. Alternating current machines. The alternating current spot welding machines equipped with electronic synchronous timers, heat control, and phase shifting devices to control weld timing and current are suitable for the welding of magnesium. Three types of machines are used; single-phase, three-phase, and dry-disk rectifier type.

d. Direct current machines. The electrostatic condenser discharge type is the most widely used direct current machine for magnesium welding. The line demand for this type of equipment may be as high as 500 kva when welding sheets approximately 0.125 inch thick. Electromagnetic machines are also used. They require lower pressure applied by the electrodes during welding than the electrostatic equipment.

e. Electrodes. Electrodes for spot welding magnesium should be made of high-conductivity copper alloys conforming to Resistance Welder Manufacturer's Association specifications. Hard-rolled copper can be used where special offset electrodes are desired. Electrodes should be water cooled but never to the point where condensation will take place. Intermittent water flow, supplied only when the weld is made, assists in the maintenance of a constant tip temperature. The most common tips are dome-ended with tip radii of curvature ranging from 2 to 8 inches, depending on sheet thickness. Four degree flat tips are frequently used. Flat tips with diameters from 3/8 to 1-1/4 inches are used on the side of the work where the surface is to be essentially free of marks. Contact surfaces of the electrodes must be kept clean and smooth.

12. **CLEANING FOR SPOT WELDING.**

a. Magnesium sheets for spot welding should be purchased with an oil coating rather than a chrome pickle finish. Pickled surfaces are hard to clean for spot welding, because of the surface etch. Satisfactory cleaning can be accomplished by either chemical or mechanical methods.

b. Mechanical cleaning is used where the number of parts to be cleaned does not justify a chemical cleaning setup. Stainless steel wool, stainless steel wire brushes, or aluminum oxide cloth are used for this purpose. Ordinary steel wool and wire brushes leave metallic particles and should not be used, because the magnetic field created in the tip will attract these particles.

c. Chemical cleaning is recommended for high production. It is economical and provides consistently low surface resistance, resulting in more uniform welds and approximately double the number of spot welds between tip cleanings. The allowable time between cleaning and welding is also much longer. Chemically cleaned parts can be welded up to 100 hours after cleaning, while mechanically cleaned parts should be welded at once.

13. **MACHINE SETTINGS.**

a. Spot welding is a machine operation requiring accurate current, timing, and welding force and therefore, the adjustment of the welding machine to the proper setting is the most important step in the production of strong consistent welds.

b. The welding machine manufacturer's operating instructions should be followed closely.

c. Recommended spacing and edge distances are given in table 8.

Table 8. Magnesium Spot Weld Data

B & S gage No.	Spot spacing (inch)	Minimum edge distance (inch)
24	0.50	0.125
18	0.70	0.187
14	1.00	0.250
12	1.25	0.375
8	1.50	0.625

14. **PRESSURE.**

a. Welding pressures are usually established first, using the lower current or capacitance and voltage values recommended. High pressure provides greater latitude in the currents that can be used for the production of sound welds but may be limited by excessive sheet separation or the size of the electrodes. After approximating the pressure, the proper weld time, voltage, and weld current or capacitance should be determined to obtain welds of the desired size and strength. If the maximum weld size is too small or cracking is encountered, it may be necessary to increase the pressure and current, or possibly the weld time.

b. After all the settings are fixed, the hold time may need adjustment to make certain that pressure is maintained on the weld until solidification is complete. Insufficient hold time will result in porous welds and is normally indicated by a cracking sound during the contraction of the weld. Trial welds should be made in material of the same gage, alloy, hardness, and surface preparation as the metal to be welded. Test welds between strips crossed at right angles are useful for determining proper welding conditions, because they can be easily twisted apart.

15. **HEAT TREATMENTS / STRESS RELIEF.**

a. Stress relief is recommended if the component will be exposed to corrosion. Suggested stress relief temperatures are listed in Table 9.

Table 9. Suggested Stress Relief Temperatures

Magnesium Alloy	Stress Relief Temperatures
QE22A	420°F ± 10°F – 4 hour
EZ33A	400°F ± 10°F – 4 hour
AZ63A	400°F ± 10°F – 4 hour
AZ91C	420°F ± 10°F – 4 hour
AZ92A	500°F ± 10°F – 4 hour

b. Post weld heat treatment recommendations are listed in Table 10 for common aviation alloys.

16. **MAGNESIUM SURFACE TREATMENTS.**

a. After all welding and thermal heat treatments, the surface exposed during weld preparation should be locally treated with a chromate conversion coating to protect from corrosion.

Table 10. Suggested Heat Treatment Temperatures

MAGNESIUM ALLOY (Final Temper Condition)	POST WELD HEAT TREATMENT TIME/TEMPERATURES
QE22A -T6	8 hrs at 985ºF + quench in 140ºF – 220°F water + 8 hrs at 400°F
EZ33A -T5	2 hrs at 650ºF + 5 hrs at 420ºF
AZ63A -T6	½ hr at 730°F + 5 hrs at 425°F
AZ63A -T4	½ hr at 730°F
AZ91C-T6	½ hr at 780°F + 4 hrs at 420°F
AZ91C -T4	½ hr at 780°F
AZ92A -T6	½ hr at 770°F + 4 hrs at 500°F
AZ92A -T4	½ hr at 770°F

ORGANIZATIONAL, INTERMEDIATE AND DEPOT MAINTENANCE

WELDING TITANIUM ALLOYS (GROUP VI)

Reference Material

Base Metal Groups ..... WP 003 04
Gas Tungsten ARC Welding Process ..... WP 004 01
Guide for the Fusion Welding of Titanium and Titanium Alloys ..... AWS G2.4
Specification for Fusion Welding for Aerospace Applications ..... AWS D17.1
Specification for Resistance Welding for Aerospace Applications ..... AWS D17.2
Surface Preparation for Welding ..... WP 006 01
Welding - General Information ..... WP 007 00
Welding Preparation ..... WP 006 02

Alphabetical Index

Subject	Page No.
Back-Up Bars	7
Cleaning	7
Heat Treatments / Stress Relief	9
Joint Design	7
Material Types	2
Safety	2
Shielding Gas	4
Spot and Seam Welding Titanium	8
Tools	4
Tungsten	6
Welding Chamber	7
Weld Filler Materials	2
Weld Technique	7
Weldment Preparation	8

Record of Applicable Technical Directives

None

NOTE

This Work Package contains GUIDANCE information to supplement higher order technical document or instructions.

1. **SAFETY.**

a. The possibility of spontaneous ignition of titanium and titanium alloys is extremely remote. Like magnesium and aluminum, the occurrence of fires is usually encountered where accumulation of grinding dust or machining chips exist.

b. Refer to Work Pack 002 **SAFETY** for specific and service specific safety information regarding titanium and titanium alloys.

2. **MATERIAL TYPES.**

a. Titanium is used as high-strength, weight critical applications and is more stringent costly to process for welding. Most titanium can be fusion welded and properly made weld in the as-welded condition are ductile and in most environments, corrosion resistant.

b. The equipment use for welding titanium are similar to that required for welding stainless steel and nickel alloys. The most important aspect of welding titanium is the need for greater attention to detail for cleaning and the use of auxiliary shielding gas, including larger gas cups of gas tungsten arc welding and backup gas.

c. Above 800°F, titanium forms additional oxide layer and above 1200°F, the oxides are absorbed, increasing the oxide layer.

d. Titanium requires complete exclusion from the effects of air surrounding the face and root of the weld puddle. This oxygen reaction will created an embrittled weld and Heat Affected Zone (HAZ) if precautions are not imposed prior to welding.

e. Titanium may be used in the commercially pure composition, commonly referred to as CP (Commercially Pure) titanium. Alloying with 6% aluminum and 4% vanadium refers to a common alloy known as Ti-6Al-4V. Other material compositions are available and may be weldable and appropriate welding instructions provided by engineering or other technical documentation should provide the details of welding.

f. For a general list of titanium alloys, refer to Work Package 003 04 **BASE METAL GROUPS** for more information.

3. **WELD FILLER MATERIALS.**

a. Common titanium filler metal for joining titanium are listed in Table 1 unless specified on applicable engineering drawing.

b. Filler wire that has been contaminated by long exposure to shop atmosphere or has come in contact with oil, grease, dirt or other foreign matter, should be cleaned in accordance with applicable engineering directives per Work Package 006 01 **SURFACE PREPARATION FOR WELDING**.

Table 1. Titanium Welding Filler Metals

BASE MATERIAL	Name	FILLER METAL		REMARKS
AMS 4931	6Al-4V, ELI	AMS 4956	R56400	(a)
AMS 4932	6Al-4V	AMS 4954	R56400	(a)
AMS 4933	8Al-1Mo-1V	AMS 4955	R54810	(b) (c)
AMS 4934	6Al-4V	AMS 4954	R56400	(a)
AMS 4935	6Al-4V	AMS 4954	R56400	(a)
AMS 4941	Pure (40 ksi)	AMS 4951	R50400	(d)
AMS 4942	Pure (40 ksi)	AMS 4951	R50400	(a)
AMS 4943	3Al-2.5V	No Weld	R56320	
AMS 4944	3Al-2.5V	No Weld	R56320	
AMS 4945	3Al-2.5V	No Weld	R56320	
AMS 4965	6Al-4V	AMS 4954	R56400	(a)
AMS 4966	5Al-2.5Sn	AMS 4953	R54520	(c)
AMS 4967	6Al-4V	AMS 4954	R56400	(a)
AMS 4972	8AL-1Mo-1V	AMS 4955	R54810	(b) (c)
AMS 4973	8AL-1Mo-1V	AMS 4955	R54810	(b) (c)
AMS 4985	6Al-4V	AMS 4954	R56410	(e) (f)
AMS 4991	6Al-4V	AMS 4954	R56410	(e) (f)

(a) Can be welded in the annealed condition or in the solution-treated condition and partially aged condition, with aging completed during post weld stress relieving.
(b) Avoid stress relief between 1000°F and 1200°F to preserve fracture toughness and minimize stress corrosion.
(c) Always weld in the annealed condition.
(d) Can be welded in the annealed or cold worked condition, however welding cold worked alloys anneals the heat affected zone and negates the strength produced by cold working.
(e) Investment casting.
(f) Radiographic quality.

(1) Filler metal shall be considered contaminated if a residue is formed on a clean white cloth (lint free) that has been tightly held and drawn over a sample piece of wire. If the test proves negative and contamination is still suspected a section of wire shall be metallurgically inspected at a magnification of 50X or greater.

(2) Die drawing compound in crevices or folds shall be grounds for rejection or further processing and testing. See Figure 1 for possible types of titanium welding wire defects.

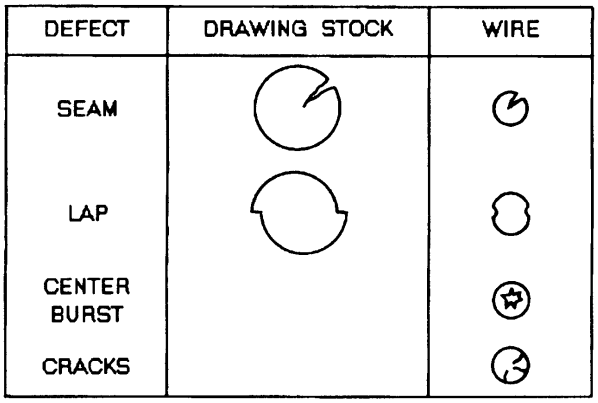

Figure 1 – Welding Wire Defects

c. Filler wire shall be stored in moisture proof containers. Filler wire removed from moisture proof containers for production use shall not be returned to storage containers unless cleaned in accordance with the procedure outlined Work Package 006 01 **SURFACE PREPARATION FOR WELDING**.

4. **TOOLS.**

a. Special tools and equipment required are as follows:

- Positioning fixtures and clamps.
- Welding chamber capable of producing a controlled atmosphere.
- Power supply capable of delivering direct current, straight polarity with superimposed high-frequency current.

b. Special materials required are as follows:

- Argon Gas with a purity of 99.99% or higher and a dew point of minus 75°F or drier.
- Tungsten Electrodes
- Filler material (welding wire).
- Cleaning solvents.
- Rags, cleaning Class A commercial grade lint free.

5. **SHIELDING GAS.**

a. Argon is the preferred shielding gas and shall be used in combination with helium only when authorized by Engineering Instructions.

b. Evidence of properly purged lines, chamber, torch and equipment is a bright metallic color on a weld test coupon. The weld metal colors for titanium, listed in table 2, in increasing order of contamination are: bright silver, light straw, dark straw, light blue, dark blue, gray blue, gray and white loose powder. The two acceptable colors for titanium welds, and weld affected zones are bright silver and light straw. All other colors are not acceptable and are cause for rejection of the weldment. Figure 2 shows the variance of oxygen content in PPM and the effects of oxidation of titanium alloys.

Table 2. Titanium Oxide Colors Problem and Treatment

WELD COLOR	PROBABLE CAUSE AND TREATMENT
Silver	Correct Shielding. No corrective action necessary.
Light Straw Dark Straw Light Blue	Surface oxide. Remove by wire brushing with new stainless steel wire brush.
Dark Blue Gray Blue Gray	Metal contamination. Welds should be removed and done over after corrections in shielding are made.
Yellow Gray White (loose deposit)	Metal contamination. Welds should be removed and done over after corrections in shielding are made.

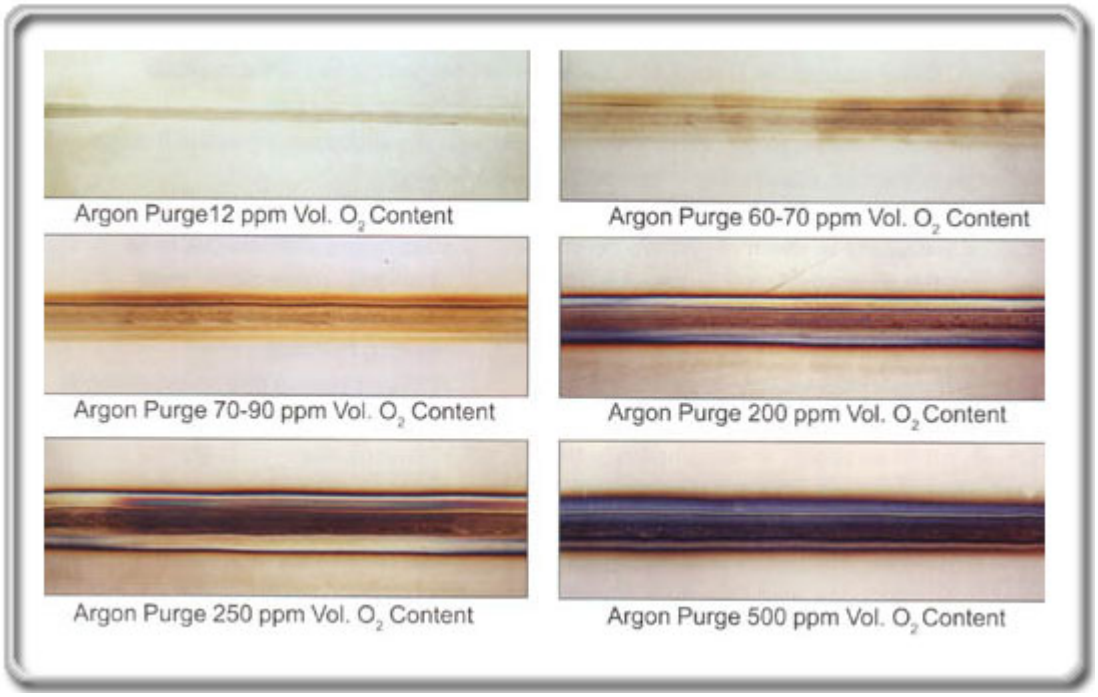

Figure 2. Oxygen Content and Discoloration of Titanium

c. Welding shall be accomplished in a draft free area to prevent dispersion of the shielding gas and contamination of the weld bead. The area shall be dust and lint free.

d. Welds not welded in a chamber shall remain shielded on all heat affected sides of the joint until the temperature of the welded part drops below 600°F.

e. During open air manual welding operation the filler rod shall remain in the protective cover of the shielding gas. Should the filler rod be contaminated by removal from the shielding gas, at least one half inch shall be trimmed from the oxidized end.

f. Primary shielding of the molten weld puddle is provided by proper selection of the welding torch using a standard water-cooled welding torch equipped with large (3/4 or 1-inch) ceramic cups and gas lenses. The large cup is necessary to provide adequate shielding for the entire molten weld puddle. The gas lens provides uniform, nonturbulent inert gas flow, focuses and balances the flow of gases and it can be used without a gas cup, or with one to improve gas coverage.

g. Secondary shielding is most commonly provided by trailing shields. The function of the trailing shield is to protect the solidified titanium weld metal and associated heat-affected zones until temperature reaches 800 degrees F or lower.

(1) Trailing shields are generally custom-made to fit a particular torch and a particular welding operation. A schematic of a trailing shield, useful for flat sheet or plate welding of titanium, is shown in Figure 3.

(2) Design of the trailing shield should be compact and allow for uniform distribution of inert gas within the device. The possible need for water-cooling should also be considered, particularly for large shields.

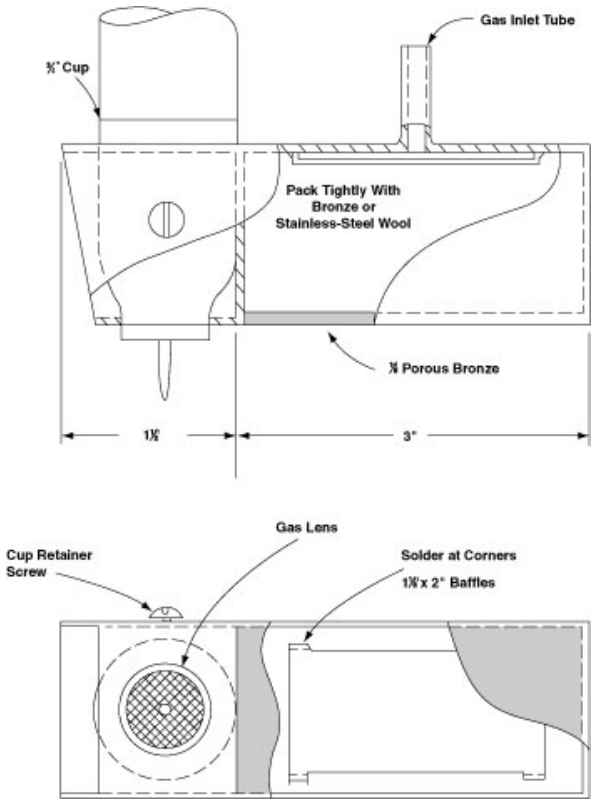

Figure 3. Schematic Of A Trailing Shield

(3) Porous bronze diffusers have provided even and nonturbulent flow of inert gas from the shield to the weld. Makeshift shielding devices are often employed very effectively with titanium welds under shop or field conditions. These include use of plastic to completely enclose the workpiece and flood it with inert gas. Likewise, aluminum or stainless steel foil "tents", taped over welds and flooded with inert gas, are used as backup shields.

(4) When such techniques are used, it is important that all air, which will contaminate welds, be purged from the system. An inert gas purge equal to ten times the volume of the air removed is a good rule-of-thumb for irregular spaces. A moderate rate of inert gas should be maintained until the weld is completed.

h. Shielding gas with a moisture content above 10ppm H_2O should have purifiers or driers installed inline between the argon source and the welding torch.

6. **TUNGSTEN.**

a. Refer to WP 004 01 **GAS TUNGSTEN ARC WELDING** for general information about tungsten selection and WP 007 00 **WELDING – GENERAL INFORMATION** for general information about tungsten geometry preparation.

b. Non-consumable electrode tips shall be ground to a sharp point, with a taper three to six diameters long.

c. Prior to regrinding, non-consumable electrodes that have been contaminated 1/4 to 3/8 inch shall be broached from the contaminated end.

7. **CLEANING.**

a. Titanium requires a greater level of cleanliness and atmospheric protection than other base metals and care must be taken to protect the clean surfaces.

b. Handle cleaned titanium parts wearing clean lint-free gloves and avoid surface contamination from fingerprints, unfiltered shop air, oil, grease and any contact with carbon-iron alloys, such as, fixtures, work benches.

c. Work Package 006 01 **SURFACE PREPARATION FOR WELDING** provides specific instructions for pre-weld cleaning of titanium.

8. **JOINT DESIGN.**

a. Fabrication. Joint designs described in AWS D17.1, *Specification for Fusion Welding for Aerospace Applications*, should be followed when fabricating titanium components.

b. Repair. Work Package 006 02 **WELDING PREPARATION** provides guidance for preparing the base metal defects for weld repair.

9. **BACK-UP BARS.**

a. Back-up bars (chilling or otherwise) shall be made of copper, (deoxidized) aluminum, or stainless steel machined so that no part of the back-up bars come in contact with the molten weld puddle, drop-thru reinforcement, or bead reinforcement.

b. Tack welds may be used to hold the mating parts prior to completing the weld operation, but shall be of minimum size and shall be free of defects.

10. **WELDING CHAMBER.**

a. Welding chambers should be used while welding titanium alloys and provide shielding gas envelopment protecting the weld bead from detrimental effects from oxygen, nitrogen, and hydrogen. The welding chamber is also known as a glove box and should be of sufficient size to hold the part and provide adequate room to maneuver the part or the welding torch.

b. The effectiveness of welding chamber gas purity with the primary argon shielding should be evaluated prior to production welding. An arc struck on a scrap piece of titanium with the torch held still and with shielding gas only on the torch and the shielding gas should be continued after a molten puddle forms and the arc is extinguished, until the weld cools. A properly prepared welding chamber should produce an uncontaminated weld bead, i.e., properly shielded, welds will be bright and silvery in appearance.

11. **WELD TECHNIQUE.**

a. Preheat and interpass temperatures are required when the parts are below 32°F. Preheat may be used to drive off moisture and reduce distortion. The preferred equipment for preheating titanium are furnaces, heat lamps, resistance elements, induction heating, and other devices with pyrometric control. The maximum preheat and interpass temperature shall not exceed 250°F. The use of oxy-acetylene torch heat is not permitted.

b. Interpass cleaning should only be performed after a visual inspection and acceptance of the surface requirements, as suggested by table 2. Further description and general acceptance criteria may be found in AWS D17.1, *Specification for Fusion Welding for Aerospace Applications*.

c. Refer to the component repair document for specific surface oxide removal and acceptance criteria.

12. **WELDMENT PREPARATION.**

a. For welding titanium and titanium alloys, joint fit-up should be better than for welding other metals, because of the possibility of entrapping air in the joint. The root opening shall be 0.25T (T = thickness) of the thinnest metal in the joint or 0.63 in., whichever is less.

b. If titanium welding is to be accomplished outside the welding chamber (open air), joints must be carefully designed so that both the top and the underside of the weld will be shielded with an inert gas.

13. **SPOT AND SEAM WELDING TITANIUM.**

a. Spot and seam welding procedures for titanium and titanium alloys are very similar to those used on other metals. Welds can be made over a wide range of conditions and special shielding is not required. The short welding times and proximity of the surfaces being joined prevent embrittlement of the welds by contamination from the air.

b. The spot and seam welding conditions which have the greatest effect on weld quality are welding current and time. With variations in these conditions, the diameter, strength, penetration, and indentation of the spot welds change appreciably. Electrode tip radius and electrode force also have some effect on these properties. For all applications, welding conditions should be established depending on the thicknesses being welded and the properties desired.

c. Most experience in spot welding is available from tests on commercially pure titanium. In these tests, the welding conditions have varied considerably, and it is difficult to determine if there are optimum spot welding conditions for various sheet gages. One of the major problems encountered is excessive weld penetration. However, penetration can be controlled by selecting suitable welding current and time.

d. Experience with some of the high strength alpha-beta (α—β) alloys has shown that post-weld heat treatments are beneficial to spot and seam weld ductility, but procedures have not been developed to heat treat these welds in the machines.

e. Resistance welding commercial specification AWS D17.2, *Specification for Resistance Welding for Aerospace Applications*, should be followed for spot and seam welds in commercially pure titanium. Suitable minimum edge distances and spot spacing are listed in table 3. These are the same spot spacing's and edge distances specified for spot welds in steel.

Table 3. Commercially Pure Titanium Spot Weld Data

B & S GAGE NO.	SPOT SPACING (INCH)	MINIMUM EDGE DISTANCE (INCH)
0.008	0.187	0.125
0.012	0.250	0.125
0.016	0.312	0.187
0.020	0.375	0.187
0.025	0.437	0.250
0.030	0.500	0.250
0.035	0.562	0.250
0.042	0.625	0.312
0.050	0.750	0.312
0.062	0.875	0.312
0.078	1.000	0.312
0.093	1.125	0.375
0.125	1.135	0.500
* Values used when not specified in drawings.		

14. **HEAT TREATMENTS / STRESS RELIEF.**

a. Stress Relieving. All titanium and titanium alloys shall be stress relieved after weld unless otherwise specified by an engineering directive. See table 4 for the time and temperature for proper stress relief.

Table 4. Stress Relief Time and Temperature

BASE METAL	FILLERWIRE	STRESS RELIEVE	TIME
Comm Pure	AMS 4951	800-1000°F	1 hr air cool
Ti. 5Al-2.5 Sn	AMS 4953	1000-2000°F	1 hr air cool
Ti. 6Al-4V	AMS 4954	1200°F	5 hrs air cool
Ti. 8Al-1Nb-1V	AMS 4955	1300°F	30 min air cool

THIS PAGE INTENTIONALLY LEFT BLANK

ORGANIZATIONAL, INTERMEDIATE AND DEPOT MAINTENANCE

WELDING COBALT ALLOYS (GROUP VII)

Reference Material

Cobalt Alloy, Corrosion and Heat-Resistant, Covered Welding Electrodes 51.5Co - 20Cr - 10Ni - 15W - UNS W73605 ..... AMS 5797
Cobalt Alloy, Corrosion and Heat-Resistant, Welding Wire 39Co - 22Cr - 22Ni - 14.5W - 0.07La - UNS R30188 ..... AMS 5801
Cobalt Alloy, Corrosion and Heat Resistant, Welding Wire 52Co - 20Cr - 10Ni - 15W - UNS R30605 ..... AMS 5796
Cobalt Alloy, Corrosion and Heat-Resistant, Welding Wire 54Co - 25.5Cr - 10.5Ni - 7.5W - UNS R30031 ..... AMS 5789
Gas Tungsten ARC Welding Process ..... WP 004 01
Rolls Royce Specification ..... MSRR 9500/25
Specification for Bare Electrodes and Rods for Surfacing ..... AWS A5.21
Specification for Surfacing Electrodes for Shielded Metal Arc Welding ..... AWS A5.13
Specification for Welding Shielding Gases ..... AWS 5.32
Welding - General Information ..... WP 007 00

Alphabetical Index

Subject	Page No.
Cleaning	3
Joint Design	3
Heat Treatments / Stress Relief	4
Material Types	2
Safety	2
Shielding Gas	2
Tools	3
Tungsten	3
Weld Filler Metals	2
Weld Technique	3

Record of Applicable Technical Directives

None

NOTE

This Work Package contains GUIDANCE information to supplement higher order technical document or instructions.

1. **SAFETY.**

WARNING

Exposure to solid cobalt in current state should not cause any ill health effects. However, if cutting or welding the inhalation of metal particulates may cause chills, fever, sweating, nausea, and cough (symptoms of metal fume fever). Metal fume fever symptoms typically begin within 4 to 12 hours after the initial exposure and lasts for approximately 24 hours without causing permanent damage. Other effects may include nose and throat irritation, metallic taste, difficulty breathing, wheezing, coughing, weight loss, excessive urination, diarrhea, pulmonary damage, nasopharyngitis, laryngitis and chest pain.

2. **MATERIAL TYPES.**

a. Cobalt alloys are primarily composed of cobalt and other alloys and designed for high temperature application, i.e., flame impingement.

3. **WELD FILLER MATERIALS.**

a. Common Cobalt filler metals are listed in Table 1 including the specification and corresponding UNS number. When selecting or ordering Cobalt filler metal use this table as a guide and refer to the requirements provided by the component technical manual or other technical directives.

Table 1. Welding Filler Metals for Cobalt Alloys

MATERIAL	FILLER METAL	SPECIFICATION	REMARKS
Stellite 6	ECoCr-A	AWS A5.13 AWS A5.21	UNS R30006
Stellite 21	ECoCr-E	AWS A5.13 AWS A5.21	UNS W73012
Stellite 31 (X-40)	Stellite 31	AMS 5789 MSRR 9500/25	UNS R30031
HS188	HS 188	AMS 5801	UNS R30188
L605 Haynes 25	L605 Haynes 25	AMS 5796 (Bare) AMS 5797 (Coated)	UNS R30605

4. **SHIELDING GAS.**

a. Primary shielding gas shall be Argon with a purity of 99.996% equivalent to AWS A5.32 Specification for Welding Shielding Gases.

b. Backup gas shall be used on base metal thicknesses up to 0.186 inch. Maximum 10 CFH.

5. **TUNGSTEN.**

a. Refer to WP 004 01 **GAS TUNGSTEN ARC WELDING** for general information about tungsten selection and WP 007 00 **WELDING – GENERAL INFORMATION** for general information about tungsten geometry preparation.

b. The preferred tungsten welding electrode should be 1.5% Lanthanum tungsten.

6. **TOOLS.**

a. Cobalt and cobalt alloys should be cleaned with a stainless steel wire brush. All cleaning tools including wire brushes and carbide grinding tools should be clean and free of debris or other metal fragments. Stainless steel brushes should be marked for the alloy use and kept isolated from other metal contact.

CAUTION

Do not put copper in direct contact with cobalt alloys, as any zinc in the copper may cause issues in high-temperature applications. In these instances, nickel-plate the chill bars.

b. Chill blocks should be used in conjunction argon backup shielding to protect the underside.

c. Protect cobalt completely from copper and copper based alloy contamination. The slightest amount of copper will result in liquid-metal embrittlement and fixtures used with cobalt should be plated with nickel or chromium.

7. **CLEANING.**

a. Contamination by greases, oils, cutting oils, crayon marks, corrosion products, lead, sulfur, and other low melting point elements, paint, scale, dye penetrant solutions, and other foreign matter should be completely removed because they can cause severe cracking problems.

b. All thermal or mechanical cutting methods are acceptable for preparation, provided that all the surfaces are then ground or polished before to clean and bright metal condition including a 1 inch band from both sides and faces of the joint.

c. Stainless steel wire brushing with clean brushes is normally adequate for interpass cleaning of weldments. The grinding of start and stop craters is recommended for all fusion welding processes.

8. **JOINT DESIGN.**

a. Joint designs for welding cobalt alloys should be similar to the designs of stainless steel.

9. **WELD TECHNIQUE.**

a. Normally, cobalt alloys possess welding characteristics similar to nickel alloys and is easier to weld than stainless steel alloys.

b. Preheat and interpass temperatures should not exceed 200°F and should be employed to remove moisture from the weld zone prior to welding.

NOTE

Welding cobalt is a low heat input method and care should be taken to minimize the amount of heat absorbed into the cobalt alloy.

c. Low heat input is tantamount to preventing centerline cracking of the cobalt weld bead and to minimize the accumulation of residual stresses adjacent to the weld zone. Use sufficient heat to melt and retain the weld puddle without allowing the weld puddle to enlarge.

10. **HEAT TREATMENTS / STRESS RELIEF.**

a. Cobalt and cobalt alloys do not require post weld heat treat operations and may be used as-is. However, if cobalt was used as a hard face material, such as Stellite 6B, the base metal substrate may require additional thermal processing.

ORGANIZATIONAL, INTERMEDIATE AND DEPOT MAINTENANCE

WELDING CAST IRON

Reference Material

Guide for Welding Iron Castings ..... AWS D11.2
Specification for Carbon Steel Electrodes and Rods for gas Shielded Arc Welding ..... AWS A5.18
Specification for Nickel and Nickel-Alloy Bare Welding Electrodes and Rods ..... AWS A5.14
Specification for Welding Electrodes and Rods for Cast Iron ..... AWS A5.15

Alphabetical Index

Subject	Page No.
Brazing Technique	9
Cleaning	3
Joint Design	3
Material Types	2
Safety	2
Shielding Gas	2
Weld Filler Materials	2
Weld Technique	4
Braze Welding Cast Iron	5
Flame Adjustment	7
Tinning	7
Heat Treatments / Stress Relief	8
Brazing Gray Cast Iron	8
Brazing Malleable Iron	8

Record of Applicable Technical Directives

None

NOTE

This Work Package contains **GUIDANCE** information to supplement higher order technical document or instructions.

1. **SAFETY.**

a. Refer to Work Package 002 for general Safety requirements.

2. **MATERIAL TYPES.**

a. Cast iron is an alloy composed primarily of Iron, Carbon, and Silicon in addition to other elements such as Nickel, Chromium, Copper and with high amounts of carbon forms Fe^3C or graphite upon solidification. Depending of which elements make up the cast iron, depends on the precautions and welding techniques.

b. Cast Iron Compositions

(1) Gray Iron. A cast iron with excess carbon, possessing excellent machinability and damping properties. The composition comprises of 2 – 4 percent carbon, 1 -3 percent silicon and 1 percent manganese with a tensile strength of 40,000 psi. Not grades of Gray Iron are weldable.

(2) White Iron. A brittle cast iron formed from rapid cooling such as from oil or water quenching or from rapid cooling from welding. The intermetallic structure reduces the ductility and weldability and increases hardness and abrasion resistance. The elemental composition comprises of 2.5-3.8 percent carbon, 0.2 – 2.8 silicon, up to 5.5 percent nickel or up to 35 percent chromium with tensile strengths ranging from 20,000 psi to 90,000 psi.

(3) Malleable Iron. With heat treatment, white iron may be transformed in ductile iron (malleable iron). The elemental composition comprises of 2.0 -2.8 percent carbon, 1.0-1.7 percent silicon and tensile strengths range from 45,000 psi to 90,000 psi and elongation properties are possible up 20 percent.

(4) Compacted Graphite. A newer cast iron with properties between those gray and ductile iron. This cast iron has better machinability and damping characteristics and has improved ductility over gray iron.

c. For more information refer to AWS D11.2, *Guide for Welding Iron Castings*.

3. **WELD FILLER MATERIALS.**

a. Table 1 list suggested filler metals for weld repair of cast iron and the recommended shielding gas, if applicable.

b. Refer to the respective AWS specification to determine the applicability of the welding electrodes and rods.

4. **SHIELDING GAS.**

a. Normally, most work is performed with the Oxy-Acetylene welding process and Shielded Metal Arc Welding (SMAW), Gas Metal Arc Welding (GMAW) may be used, depending on the amount of repair the component requires for repair.

b. Shielding gas for GMAW usually consists of 75Ar/25CO_2 for use with ER 70S-2 or ER 70S-6 filler metal, per AWS A5.18, *Specification for Carbon Steel Electrodes and Rods for gas Shielded Arc Welding*. Other Cast Iron filler metals may be used as determined by AWS A5.14, ENi-1, *Specification for Nickel and Nickel-Alloy Bare Welding Electrodes and Rods*.

c. Specific weld filler metals for cast iron may be used as described by AWS A5.15, *Specification for Welding Electrodes and Rods for Cast Iron*.

Table 1. Suggested Filler Metal for Various Welding Processes

PROCESS	FILLER METAL	SHIELDING GAS (IF APPLICABLE)
Oxy-Acetylene	AWS A5.15	None
Shielded Metal Arc Welding (SMAW)	AWS A5.15	None
Gas Metal Arc Welding (GMAW)	AWS A5.14 ERNi-1 AWS A5.18 ER 70S-3 ER 70S-6	100% Argon 100% CO_2 75Ar/25CO_2

5. **CLEANING.**

a. For sounds welds, the base metal must be clean, all cracks or defects completely removed before welding. This requirement also applies to repairing shrinkage defects and inclusions.

b. All coatings, sand, rust, paint, oil and grease, moisture, dirt and other materials must be removed before welding is to begin.

c. Baking cast irons in temperatures between 700-900º F will remove absorbed oil and grease.

d. Removing sand, silt, or other debris may be performed by welding a bead and grinding the weld bead away until the casting surface is sealed and free of defects. This may take several attempts and a single attempt with this method may not work.

6. **JOINT DESIGN.**

a. Thin cast iron may have the repair groove made with a single-V or a single-U groove. Superficial repairs using steel filler metals, such as, E6010 electrodes are acceptable. However, machining of cast iron repaired with steel electrodes may harden the surface sufficiently high to make machining difficult to impossible.

b. Thick cast iron, approximately 1/2 inch or more should have grooves ground into the casting surface to alleviate stress. As the cast iron cross-section increase, it is desirable to prepare the joint using a double U-groove or double V-groove and weld the joint closed from both sides.

7. **WELD TECHNIQUE.**

a. General. Gray cast iron has low ductility and therefore will not expand or stretch to any considerable extent before breaking or cracking. Because of this characteristic, preheating is necessary when cast iron is welded by the oxyacetylene welding process. It can, however, be welded with the metal-arc process without preheating if the welding heat is carefully controlled. This can be accomplished by welding only short lengths of the joint at a time and allowing these sections to cool. By this procedure, the heat of welding is confined to a small area and the danger of cracking the casting is eliminated. Large castings with complicated sections, such as motor blocks, can be welded without dismantling or preheating. Special electrodes designed for this purpose are usually desirable.

b. Edge Preparation. The edges of the joint should be chipped out or ground to form a 60 degree angle or bevel. The V should extend to approximately 1/8 inch from the bottom of the crack. A small hole should be drilled at each end of the crack to prevent it from spreading. All grease, dirt, and other foreign substances should be removed by washing with a suitable cleaning material.

c. Welding Technique.

(1) Cast iron can be welded with a coated steel electrode, but this method should be used as an emergency measure only. When using a steel electrode, the contraction of the steel weld metal, the carbon picked up from the cast iron by the weld metal, and the hardness of the weld metal caused by rapid cooling must be considered. Steel shrinks more than cast iron when cooled from a molten to a solid state and, when a steel electrode is used, this uneven shrinkage will cause strains at the joint after welding. When a large quantity of filler metal is applied to the joint, the cast iron may crack just back of the line of fusion unless preventive steps are taken. To overcome these difficulties, the prepared joint should be welded by depositing the weld metal in short string beads, 3/4 to 1 inch long, made intermittently and, in some cases, by the backstep and skip procedure. To avoid hard spots, the arc should be struck in the V and not on the surface of the base metal. Each short length of weld metal applied to the joint should be lightly peened while hot with a small ball peen hammer and allowed to cool before additional weld metal is applied. The peening action forges the metal and relieves the cooling strains.

(2) The electrodes used should be 1/8 inch in diameter so as to prevent excessive welding heat, the welding should be done with reverse polarity, and the weaving of the electrode should be held to a minimum. Each weld metal deposit should be thoroughly cleaned before additional metal is added.

(3) Cast iron electrodes are used where subsequent machining of the welded joint is required. Stainless steel electrodes are used when machining of the weld is not required. The procedure for making welds with these electrodes is the same as that outlined for welding with mild steel electrodes. Stainless steel electrodes provide excellent fusion between the filler and base metals but great care must be taken to avoid cracking in the weld, because stainless steel expands and contracts approximately 50 percent more than mild steel in equal changes of temperature.

d. Studding. Cracks in large castings are sometimes repaired by “studding” (Figure 1). In this process, the fracture is removed by grinding a V groove, holes are drilled and tapped at an angle on each side of the groove, and studs are screwed into these holes for a distance equal to the diameter of the studs, with the upper ends projecting approximately 1/4 inch above the cast iron surface. The studs should be seal welded in place by one or two beads around each stud and then tied together by weld metal beads. Welds should be made in short lengths and each length peened while hot to prevent high stresses or cracking upon cooling. Each bead should be allowed to cool and be thoroughly cleaned before additional metal is deposited. If the studding method cannot

be applied, the edges of the joint should be chipped out or machined with a round-nosed tool to form a U groove into which the weld metal should be deposited.

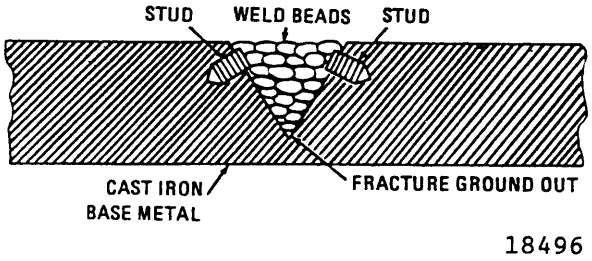

Figure 1. Studding Method for Cast Iron Repair

e. Metal-Arc Brazing of Cast Iron. Cast iron can be brazed with heavy coated, reverse polarity bronze electrodes. The joints made by this method should be prepared in a manner similar to that used for oxyacetylene brazing of cast iron. The strength of the joint depends on the quality of the bond between the filler metal and the cast iron base metal.

f. Carbon-Arc Welding of Cast Iron. Iron castings may be welded with a carbon arc, a cast iron rod, and a cast iron welding flux. The joint should be preheated by moving the carbon electrodes along the surface, thereby preventing too rapid cooling after welding. The molten-puddle of metal can be worked with the carbon electrode so as to move any slag or oxides that are formed to the surface. Welds made with the carbon arc cool more slowly and are not as hard as those made with the metal arc and a cast iron electrode. The welds are machinable.

8. **BRAZE WELDING CAST IRON.**

a. PREHEATING. Cast iron should be preheated to a dull red heat (1,472°F(800°C)) before welding to equalize expansion and contraction stresses. Heating of the entire casting is desirable, except for thin sections which are completely restrained. This preheating can be performed with an acetylene torch, a furnace heated by charcoal, oil or gas burners, or other available sources of heat. If the preheating is not uniform the finished weld will be warped and cracks may appear on the surface or in the weld metal. Preheating also helps to soften the casting because the carbon in the weld metal will separate as graphite. When the preheated metal is allowed to cool slowly the finished weld will have a minimum of cooling stresses, internal strains, and can be machined without difficulty. Slow cooling is achieved by covering the entire casting with suitable high temperature insulating material. If the casting is not cooled slowly after welding the weld area will be transformed into white cast iron. White cast iron is very brittle, difficult to machine, and may crack when the assembled part is used.

b. PREPARATION FOR WELDING. Scale, cutting slag, grease, and dirt must be completely removed from the parts to be welded by grinding, wire brushing, sand- blasting, etc. Cracks in casting should be chipped out with a cold chisel to form a 90 degree V and should extend to approximately 1/8 inch from the bottom of the crack. A 120 degree V is sometimes desirable when the weld is made from one side only. A hole drilled at the extreme end or ends of a crack will prevent it from spreading during welding.

c. WELDING ROD. The welding rod is cast iron with a melting point as low as practical. It must be free of nonmetallic inclusions and low in phosphorus and sulfur content.

d. FLUX. Flux must be used in welding cast iron to remove the slag that forms on the cast iron puddle. The flux acts to clean the metal, remove slag inclusions, prevent porosity, and provide a sound weld. Fluxed welding rods are obtainable but usually the flux is applied by dipping the hot rod into the flux and transferring it to the molten puddle as required to overcome momentary difficulties.

e. Welding Method.

(1) The torch should be adjusted to give a neutral flame (WP 004 04). The flame should be pointed toward the finished weld (backhand welding) and the inner cone tip should be approximately 1/8 to 1/4 inch away from the molten puddle. A slight weaving motion should be used to melt down the sides and penetrate to the bottom of the V.

(2) In general the same precautions should be taken as in welding steel. The end of the welding rod should be heated, dipped into the flux, placed in the weld metal puddle, and gradually melted. The rod should not be held above the weld and melted drop by drop. Care should be taken that the sides of the bevel are completely melted and that the weld metal does not come in contact with cold base metal. The rod should be used to puddle out any slag, dirt, or blow- holes that may occur during welding.

(3) Care should be taken not to overheat the metal and thus cause the puddle to run away or burn through. The rod should be dipped into the flux often enough to insure fluidity of the weld metal. The preferred technique is to deposit the weld in layers not exceeding 1/8 inch thick, and to build the weld slightly above the level of the base metal to provide some reinforcement.

(4) Allowances should be made for expansion during heating and contraction while cooling, and the parts to be welded should be aligned in such a manner that the welded pieces assume the desired shape.

(5) Cast iron welding should be carried on as rapidly as possible. When the weld has been completed the entire piece should be reheated at a uniform rate (1,100°F to 1,500°F(593°C to 816°C)), and held at this temperature for 1 hour per inch of thickness; then cooled at a rate not to exceed 50°F(10°C) per hour. This process will relieve stresses and strains caused by welding. Cooling may be accomplished in the stress relieving furnace, or by covering the reheated piece with heat insulating material.

f. Localized preheating of large castings. When a section of a large casting to be welded is so located that the weld can be made without upsetting the entire casting, local preheating may be used. in welding large castings, sections of which vary in thickness, the preheating should be controlled so as not to overheat and warp the lighter sections.

g. Sealing Porous Cast Iron Welds.

NOTE

Preferred insulating cloth is a REFRAISAL cloth or equivalent should be used for controlling heat in a cast iron component.

Suggested Source: Source: HITCO Carbon Composites, Inc., 1600 West 135th Street, Gardena, California 90249

P/N C1554-96, Size 33 inch wide

(1) Welds in cast iron castings, such as cylinder blocks, must be free from pores, minute cracks, and other defects that will cause leakage. In order to ensure watertightness a sealing coat made of powdered sulfur and fine graphite powder may be used. This material is prepared by melting four to five parts of sulfur and adding one part of graphite. The graphite is thoroughly mixed with the melted sulfur. If the mixture should ignite it can be

extinguished by smothering with REFRAISAL cloth or equivalent. The material is cast into long bars by pouring the mixture into the v of an angle iron section lined with cloth. The cast bar is removed when cold and the REFRAISAL cloth is removed before the sealing material is applied to the weld.

(2) Welds made on cast iron castings should be coated with this sealing material while the weld is still hot. The end of the cast bar is rubbed onto the hot weld. A small portion will melt and form a thin film on the weld. This application will penetrate into the small pores and cracks providing an effective seal when cool. All surface scale, slag, and other foreign material must be brushed from the weld before the sealing material is applied. This sealing material can be applied to cold welds by careful heating of the weld with the oxyacetylene torch.

h. Hard Spots in Cast Iron Weld.

(1) Hard spots in a cast iron weld, often complained of by machinists finishing up a casting which has been welded, are caused by chilling portions of the weld by plunging a cold rod into the puddle of molten metal, or by allowing a part of the weld to suddenly become cool by removing the torch from it, or by failure to protect the hot weld from cool air drafts. The result is a greater percentage of combined carbon and less of graphite, hence small parts of the casting are hard white iron instead of soft gray iron.

(2) Hard spots may also be caused by the chilling effect of the metal surrounding the weld. The casting adjacent to the weld must be kept hot so that there will be no chilling action along the border of the weld between the weld metal and the metal of the casting; otherwise, there may be a hard area along this boundary which will cause trouble in machining and finishing the surface of the casting. If proper care is taken during cooling of the casting and if it is thoroughly protected during welding, there is no reason for having hard spots in any part of the weld or adjacent metal.

10. **FLAME ADJUSTMENT.**

The flame should be slightly oxidizing, which will permit better bonding between the bronze and the base metal and suppress zinc fumes. The proper oxidizing flame is obtained by adjusting to neutral and then closing the acetylene valve slowly until the inner cone has been reduced in length by about one-tenth. In some cases the proper oxidizing flame is obtained after the operation is started by adjusting the acetylene valve until fuming ceases.

11. **TINNING.**

Tinning is the spreading out of a thin layer of molten fluxed weld metal ahead of the main deposit to form a coating which provides a strong bond between the base metal and bronze. This tinning is due to the action of the flame and the flux. It will take place only when the base metal is at the right temperature. If the base metal is not hot enough the bronze will not flow; if too hot the molten bronze will boil, fume excessively, and will form droplets on the edges of the base metal. Proper tinning will be similar in appearance to water spreading over a clean moist surface, whereas improper tinning has the appearance of water on a greasy surface.

A liberal amount of flux should be used, especially when the speed of brazing is rapid. This can be done by heating several inches of the end of the bronze rod and dipping or rolling it in a container of flux. Where brazing progresses more slowly, as in the repair of heavy castings, it is sufficient to dip the hot end of the rod into the flux, and add to the puddle as required.

12. **BRAZING TECHNIQUE.**

Begin brazing by heating a small area just enough to cause the metal from the fluxed filler rod to spread out evenly and produce a tinning coat a short distance ahead of the main deposit. The inner cone of the slightly oxidizing flame should be kept 1/8 inch away from the surface of the metal. Usually the flame is pointed ahead of the completed bead at an angle of about 45 degrees, with the puddle under and slightly behind the flame. The torch angle may vary, depending on the position of the joint (overhead or vertical) and the thickness of the bead being made. The motion of the rod and torch will depend on the size of the puddle being carried, the nature of the joint or surfaces brazed, and the speed of brazing.

When brazing heavy sections it may be necessary to deposit the filler metal in layers. In such cases the base metal must be thoroughly tinned when the first layer is deposited and care should be taken to ensure good fusion between layers.

Never reheat the bead after it has solidified without adding more fluxed filler metal. Otherwise the deposited filler metal becomes porous and of low strength. Brazing should be done in one pass or layer whenever possible.

Brazing, especially on castings, must be protected from drafts to permit slow cooling. This can be done by burying it in a box of lime or fine sand. No stress should be put on a bonded joint until it has cooled completely, because brass has a relatively low strength when hot.

The finished bead should be cleaned with a wire brush to remove any excess flux from the surface of the metal.

13. **BRAZING GRAY CAST IRON.**

Gray cast iron can be brazed with very little or no preheating. For this reason, broken castings that would otherwise need to be dismantled and preheated can be brazed in place. A nonferrous filler metal such as naval brass (60 percent copper, 39.25 percent zinc, 0.75 percent tin) is satisfactory for this purpose. This melting point of the nonferrous filler metal is several hundred degrees lower than the cast iron; consequently the work can be accomplished with a lower heat input, the deposition of metal is greater and the brazing can be accomplished faster. Because of the lower heat required for brazing, the thermal stresses developed are less severe and stress relief heat treatment is usually not required.

The preparation of large castings for brazing is much like that required for welding with cast iron rods. The joint to be brazed must be clean and the part must be sufficiently warm to prevent chilling of filler metal before sufficient penetration and bonding are obtained. When possible the joint should be brazed from both sides to ensure uniform strength throughout the weld. In heavy sections the edges should be beveled to form a 60 to 90 degree V.

14. BRAZING MALLEABLE IRON.

Malleable iron castings are usually repaired by brazing because the heat required for fusion welding will destroy the properties of malleable iron. Because of the special heat treatment required to develop malleability, it would be impossible to restore completely these properties by simply annealing. Where special heat treatment can be performed, welding with a cast iron filler rod and remalleabilizing are feasible.

15. HEAT TREATMENTS / STRESS RELIEF

a. The final stress level of a welded casting is effected by the rate at which the casting is permitted to cool. To minimize the residual stresses, the cast iron should be allowed to cool slowly by:

- Post heating with a torch
- Transferring the casting to a furnace and slow cool the furnace
- Cover the casting with an insulating blanket

b. Post weld heat treat may be necessary to

- Improve ductility of HAZ
- Improve machinability
- Transform any martensitic microstructures formed from welding to a less brittle phase
- To relieve residual stresses in the casting

c. In general, the normal process for cooling a casting to soak the cast material at temperature between 950°F – 1250°F for one hour per inch thickness and then follow-up with a cooling rate of 100°F per hour until the casting is at room temperature.

THIS PAGE INTENTIONALLY LEFT BLANK

ORGANIZATIONAL, INTERMEDIATE AND DEPOT MAINTENANCE

WELDING OTHER METALS

Reference Material

Gas Tungsten ARC Welding Process ..... WP 004 01
Specification for Copper and Copper-Based Bare Welding Rods and Electrode ..... AWS A5.7
Welding - General Information ..... WP 007 00

Alphabetical Index

Subject	Page No.
Cleaning	3
Copper Brazing	4
Copper Welding	2
Gas and Shielding Gas	3
Joint Design	3
Material Types	2
Safety	2
Tools	3
Tungsten	3
Weld Filler Materials	2
Weld Technique	4
Lead Welding	4
Cleaning	6
Gas and Shielding Gas	5
Joint Design	6
Material Types	5
Safety	5
Tools	5
Weld Filler Materials	5
Welding Technique	6

Record of Applicable Technical Directives

None

NOTE

This Work Package contains GUIDANCE information to supplement higher order technical document or instructions.

1. **COPPER WELDING**

2. **SAFETY.**

WARNING

Grinding, melting, welding, cutting, or any other operations that reduce the particle size of the material will change the hazard classification of the product. If the particle size or oxidation state of this product is reduced, refer to the applicable regulatory standards for appropriate protection measures.

3. **MATERIAL TYPES.**

WARNING

The information provided herein is not suitable for work involving Beryllium-Copper alloys (UNS C17000, C17200, or C17500) and is beyond the scope and intention of this general series manual. Consult with engineering before welding on Be-Cu alloys.

a. The welding instructions of this work package pertains to the Copper Alloys listed in Table 1 and other copper alloys may be welded except as noted in the warning. Consult with cognizant engineering authority for additional information.

Table 1. Weldable Copper Alloys

COPPER ALLOY UNS NUMBER	ALLOY NAME
C10200	Oxygen-free Copper (OFC)
C11000	Electrolytic Tough Pitch (ETP) Copper
C12000	Phosphorus-deoxidized copper [Low P]
C12200	Phosphorus-deoxidized copper [High P]

4. **WELD FILLER MATERIALS.**

a. Copper may be welded with or without filler metal using the Gas Tungsten Arc Welding process.

b. Recommended weld filler material is ERCu per AWS A5.7, *Specification for Copper and Copper-Based Bare Welding Rods and Electrodes*.

(1) ERCu filler metals are made of deoxidized copper, but also may contain one or more of the following elements: phosphorus, silicon, tin, manganese, and silver. Phosphorus and silicon are added primarily as deoxidizers. The other elements add either to the ease of welding or to the properties of the final weldment.

(2) ERCu filler metals generally are used for the welding of deoxidized and electrolytic tough pitch (ETP) copper. Reactions with hydrogen in oxygen-free copper, and the segregation of copper oxide in tough pitch copper may detract from joint efficiency.

(3) ERCu welding electrodes and rods may be used to weld these base metals when the highest quality is not required.

5. **GAS AND SHIELDING GAS.**

a. Argon gas is generally used for Gas Tungsten Arc Welding copper for thicknesses under 1/8-inch and a mixture of Argon and Helium (75Ar-25He) or 100% Helium for increasing thickness to 1/2 inch.

6. **TUNGSTEN.**

a. Refer to WP 004 01 **GAS TUNGSTEN ARC WELDING** for general information about tungsten selection and WP 007 00 **WELDING – GENERAL INFORMATION** for general information about tungsten geometry preparation.

b. Proper preparation of tungsten electrodes is usually a 60-degree included angle with the tip of the point truncated to approximately 1/3 the diameter of the electrode.

7. **TOOLS.**

a. Clean, sharp rotary carbide tools may be used to prepare the surfaces of copper prior to welding. Scraping copper with clean, hardened tools is the preferred method for preparing copper for welding.

b. Stainless steel wire brushes with small diameter strands, specifically identified and used for copper alloys is recommended. Power wire brushes may be used if the necessary.

8. **CLEANING.**

a. Copper base metal should be free from moisture and all other contaminants, including surface oxides.

9. **JOINT DESIGN.**

a. Backing rings or strips made from carbon, graphite, or ceramic may be used when butt welding copper plates.

b. In welding thin sheets the forehand welding method is preferred, while the backhand method is preferred for thicknesses of 1/4 inch or more. For sheets up to 1/8 inch thick a plain butt joint with squared edges is preferred. For thicknesses greater than 1/8 inch the edges should be beveled for an included angle of 60 to 90 degrees, in order to obtain penetration without spreading fusion over a wide area.

10. **WELD TECHNIQUE.**

NOTE

Preheating is desirable on most work; on thick base metal it is essential. Preheat temperatures of 400°F to 1000°F [200°C to 500°C] are suitable.

a. Copper has a high thermal conductivity; consequently the heat required for welding is approximately twice that required for steel of similar thickness. To offset this loss of heat a tip one or two sizes larger than that required for steel is recommended. When welding large sections of heavy thicknesses, supplementary heating with a charcoal fire, a separate heating unit, or another torch is advisable. This makes a weld that is less porous that one made by preheating and welding with the same torch.

b. Copper may be welded with a slightly oxidizing flame because the molten metal is protected by the oxide which is formed by the flame. If a flux is used to protect the molten metal the flame should be neutral.

d. In welding copper sheets the heat is conducted away from the welding zone so rapidly that it is difficult to bring the temperature up to the fusion point. It is often necessary to raise the temperature level of the sheet in a large area, 6 inches to a foot away from the weld, nearly to red heat before a welding torch of the usual size is effective in welding the edges. The weld should be started at some point away from the end of the joint and welded back to the end with filler metal being added. Then, after returning to the starting point, the weld should be started and made in the opposite direction to the other end of the seam. During the operation the torch should be held at approximately a 60 degree angle to the base metal.

d. It is advisable to back up the seam on the underside with carbon blocks or thin sheet metal to prevent uneven penetration. These materials should be channeled or undercut to permit complete fusion to the base of the joint. The metal on each side of the weld should be covered with fire resistant material to prevent radiation of heat into the atmosphere, allowing the molten metal in the weld to solidify and cool slowly.

e. The welding speed should be uniform and the end of the filler rod should be kept in the molten puddle. During the entire welding operation the molten metal must be protected by the outer flame envelope. If the metal fails to flow freely during the operation the rod should be raised and the base metal heated to a red heat along the seam. The weld should be started again and continued until the seam weld is completed.

11. **COPPER BRAZING.**

a. Both oxygen bearing and oxygen free copper can be brazed to produce a joint with satisfactory properties. The full strength of an annealed copper brazed joint will be developed with a lap joint

b. The flame used should be slightly carburizing. All of the silver brazing alloys can be used with the proper fluxes. With the copper-phosphorous or copper-phosphorous-silver alloys a brazed joint can be made without a flux, although the use of flux will result in a joint of better appearance.

12. **LEAD WELDING.**

a. The welding of lead is similar to welding of other metals except that no flux is required and processes other than gas welding are not in general use.

b. The safety aspect of welding lead cannot be overstated and all PPE, engineering controls, and environmental, safety, and industrial hygienists controls and restriction must be complied with prior undertaking any lead welding operations.

13. **SAFETY.**

WARNING

The welding and cutting of lead-bearing alloys or metals whose surfaces have been painted with lead-based paint can generate lead oxide fumes. Inhalation and ingestion of lead oxide fumes and other lead compounds will cause lead poisoning. Symptoms include metallic taste in the mouth, loss of appetite, nausea, abdominal cramps, and insomnia. In time, anemia and general weakness, chiefly in the muscles of the wrists, develop. Lead adversely affects the brain, central nervous system, circulatory system, reproductive system, kidneys, and muscles.

14. **MATERIAL TYPES.**

a. All alloys of lead may be welded using the oxy-acetylene welding process.

15. **WELD FILLER MATERIALS.**

a. Welding Rods. The filler rods should be of the same composition as the lead to be welded. They range in size from 1/8 to 3/4 inch in diameter. The smaller sizes are used for lightweight lead and the larger sizes for heavier lead.

16. **GAS AND SHIELDING GAS.**

a. Three combinations of gases are commonly used for lead welding. These are oxyacetylene, oxy-hydrogen, and oxygen-natural gas. The oxyacetylene and oxy-hydrogen processes are satisfactory for all positions. The oxygen-natural gas is not used for overhead welding. A low gas pressure ranging from 1 1/2 to 5 psi is generally used, depending on the type of weld to be made.

b. Three combinations of gases are commonly used for lead welding. These are oxyacetylene, oxy-hydrogen, and oxygen-natural gas. The oxyacetylene and oxy-hydrogen processes are satisfactory for all positions. The oxygen-natural gas is not used for overhead welding. A low gas pressure ranging from 1 1/2 to 5 psi is generally used, depending on the type of weld to be made.

17. **TOOLS.**

a. Torch. The welding torch is relatively small in size, with the oxygen and flammable gas valves located at the forward end of the handle so that they may be conveniently adjusted by the thumb of the holding hand. Torch tips range in drill size from 78 to 68. The smaller tips are for 6-pound lead (i.e. 6 pounds per sq. ft.), the larger tips for heavier lead.

19. **CLEANING.**

WARNING

Consult with cognizant Safety, Environmental, Engineering, and Industrial Hygienists before undertaking any operations that involve the handling, cutting, and cleaning of lead and lead alloys.

a. Care must be taken when handling, cutting, and cleaning lead alloys prior to welding.

20. **JOINT DESIGN.**

a. Types of Joints. Butt, lap, and edge joints are the types most commonly used in lead welding. Either the butt or lap joint is used on flat position welding. On vertical and overhead position welding the lap joint is used. The edge or flange joint is used only under special conditions.

21. **WELDING TECHNIQUE.**

a. The flame must be neutral. A reducing flame will leave soot on the joint and an oxidizing flame will produce oxides on the molten lead and will produce coalescence. A soft, bushy flame is most desirable for welding in a horizontal position. A more pointed flame is generally used in the vertical and overhead positions.

b. The flow of molten lead is controlled by the flame, which is usually handled with a semicircular or V-shaped motion. This accounts for the herringbone appearance of the lead weld. The direction of the weld depends on the type of joint and the position of the weld.

(1) The welding of vertical position lap joints is started at the bottom of the joint. A welding rod is not generally used. In flat position welding lap joints are preferred. The torch is moved in a semicircular path toward the lap and then away. Filler metal is used but not on the first pass.

(2) Overhead position welding is very difficult. For that position a lap joint and a flame as sharp as possible are used. The molten beads must be small and the welding operation must be completed quickly.

ORGANIZATIONAL, INTERMEDIATE AND DEPOT MAINTENANCE POST WELDING GENERAL INFORMATION

Reference Material

None

Alphabetical Index

Subject	Page No.
Post Weld Contouring	2
Post Weld Thermal Treatments	2
Purpose	2

Record of Applicable Technical Directives

None

NOTE

In the event of conflict between this general series work package and specific repair instructions supported by competent or cognizant entities, the specific repair instructions takes precedence.

NOTE

This Work Package contains GUIDANCE information to supplement higher order technical document or instructions.

1. **PURPOSE.**

a. Provide the welder with information and guidance for after welding operations. Not all techniques provided are applicable to every weld job, but having the basic information about post welding operations ensures that the welds are going to perform as prescribed.

2. **POST WELD THERMAL HEAT TREATMENTS.**

a. Post weld thermal treatments may be necessary depending on the alloy or the content of the alloy. This work package provides guidance about which specifications control the thermal heat treatment when the technical requirements are not provided from the OEM.

b. The use of thermal heat treatments are not required and the applicability of these thermal heat treatments must be considered on a case by case basis or as specified in the original equipment manufacturers repair instructions, such as technical manuals (TM) or technical orders (TO)

3. **POST WELD CONTOURING.**

a. Post weld contouring may be required by specific repair instructions and those instruction must be followed.

b. The instructions discussed in WP 008 02 are intended for guidance only and provides information on the purposes of post weld contouring.

c. The use of post weld contouring are not required and the applicability of post weld contouring must be considered on a case by case basis.

ORGANIZATIONAL, INTERMEDIATE AND DEPOT MAINTENANCE

POST WELDING THERMAL OPERATIONS

Reference Material

Heat Treatment Austenitic Corrosion-Resistant Steel Parts ..... AMS 2759/4
Heat Treatment Cast Nickel Alloy and Cobalt Alloy Parts ..... AMS 2773
Heat Treatment Martensitic Corrosion-Resistant Steel Parts ..... AMS 2759/5
Heat Treatment of Aluminum Alloy Castings ..... AMS 2771
Heat Treatment of Carbon and Low-Alloy Steel Parts Minimum Tensile Strength Below 220 ksi ..... AMS 2759/1
Heat Treatment of Low-Alloy Steel Parts Minimum Tensile Strength 220 ksi and Higher ..... AMS 2759/2
Heat Treatment of Magnesium Alloy Castings ..... AMS 2768
Heat treatment of Steel Parts, General Requirements ..... AMS 2759
Heat Treatment of Titanium Alloy Parts ..... AMS 2801
Heat Treatment of Wrought Aluminum Alloy Parts ..... AMS 2770
Heat Treatment Precipitation-Hardening Corrosion Resistant and Maraging Steel Parts ..... AMS 2759/3
Heat Treatment Wrought Nickel Alloy and Cobalt Alloy Parts ..... AMS 2774
Welding, Brazing, and Soldering Volume 6 ..... ASM Handbook

Alphabetical Index

Subject **Page No.**

General 2
Cleaning 2
General Post Weld Heat Instructions 2
Post Heating of Steel (Group I) 3
Post Heating of Stainless Steel Alloys 4
Post Heating of Nickel Alloys (Group III) and Cobalt Alloys (Group VII) 4
Post Heating of Aluminum Alloys (Group IV) 4
Post Heating of Magnesium Alloys (Group V) 4
Post Heating of Titanium Alloys (Group VI) 4
Shot Peening 5

Record of Applicable Technical Directives

None

NOTE

This Work Package contains GUIDANCE information to supplement higher order technical document or instructions.

1. **PURPOSE.**

a. Provide guidance for the post weld thermal treatment operations.

b. Provides guidance on cleaning as a post weld heat treat method which will prevent contamination of base metals and potential base metal cracking.

c. Suggests alternative post weld thermal heat treatments based on base metal groups.

2. **CLEANING.**

CAUTION

NDI Penetrant remaining on the surfaces or in voids can be a source of cracking or undesirable oxidation. Never post weld thermal treat any part without complete removal of oils, grease, penetrant inspection dyes.

a. Cleaning of base metals shall be performed to prevent contaminating the parts during post weld thermal treatments.

b. Refer to component technical manual for suggested cleaning methods or work package series 006 for additional suggestions and information.

NOTE

For conflicts between the OEM specified post weld thermal heat treatments and this manual, the OEM technical instructions takes precedence.

3. **GENERAL POST WELD HEAT TREAT INSTRUCTIONS.**

4. **POSTHEATING OF STEEL (GROUP I).**

a. The general heat treat specifications for the processing of Steel Parts are:

(1) AMS 2759 *Heat treatment of Steel Parts, General Requirements*.

(2) AMS 2759/1, *Heat Treatment of Carbon and Low-Alloy Steel Parts Minimum Tensile Strength Below 220 ksi*

(3) AMS 2759/2, *Heat Treatment of Low-Alloy Steel Parts Minimum Tensile Strength 220 ksi and Higher*

b. The requirement for post weld heat treatment of steels shall be performed per the component technical manual or other technical directive.

c. Generally, post heating is specified for the steels that contain more than about 0.35% C, although there can be many exceptions.

d. Stress relieving usually is required and may be mandatory for weldments of all steels with carbon contents above 0.025% carbon (C), especially if the weldment is to be put into service without being quenched and tempered. If a weldment is to be quenched and tempered, stress relieving can usually be omitted. Dimensional stability and notch toughness usually determine the need for stress relief.

e. In preferred practice, the heating for stress relieving, or for the austenitizing that precedes quenching, should begin before the weldment cools to a temperature below the interpass temperature. However, this procedure is not always practical, and in some applications the weldment remains at room temperature for an indefinite time before being stress relieved. Drafts of air impinging on the weldment while it is cooling to room temperature should be avoided.

f. For complete, or almost complete, stress relief, the weldment should be heated to 1100°F to 1250°F and held for one hour per inch of maximum base-metal thickness. If heating in this range is impractical, partial stress relief can be attained by heating at a lower temperature (for instance, 900°F) for several hours.

5. **POSTHEATING OF STAINLESS STEEL ALLOYS (GROUP II).**

a. The general heat treat specifications for the processing of Stainless Steel Parts are:

(1) AMS 2759 *Heat treatment of Steel Parts, General Requirements*.

(2) AMS 2759/3 *Heat Treatment Precipitation-Hardening Corrosion Resistant and Maraging Steel Parts*.

(3) AMS 2759/4 *Heat Treatment Austenitic Corrosion-Resistant Steel Parts.*

(4) AMS 2759/5 *Heat Treatment Martensitic Corrosion-Resistant Steel Parts.*

b. The requirement for post weld heat treatment of stainless steels shall be performed per the component technical manual or other technical directive.

6. **POSTHEATING OF NICKEL ALLOYS (GROUP III) AND COBALT ALLOYS (GROUP VII).**

a. The general heat treat specifications for the processing of Nickel and Cobalt Parts are:

(1) AMS 2773, *Heat Treatment Cast Nickel Alloy and Cobalt Alloy Parts*

(2) AMS 2774, *Heat Treatment Wrought Nickel Alloy and Cobalt Alloy Parts*

b. The requirement for post weld heat treatment of nickel and cobalt alloys shall be performed per the component technical manual or other technical directive.

7. **POSTHEATING OF ALUMINUM ALLOYS (GROUP IV).**

a. The general heat treat specifications for the processing of Aluminum Alloy Parts are:

(1) AMS 2770, *Heat Treatment of Wrought Aluminum Alloy Parts*

(2) AMS 2771, *Heat Treatment of Aluminum Alloy Castings*

b. The requirement for post weld heat treatment of aluminum alloys shall be performed per the component technical manual or other technical directive.

8. **POSTHEATING OF MAGNESIUM (GROUP V).**

a. The general heat treat specifications for the processing of Magnesium Alloys are

(1) AMS 2768, *Heat Treatment of Magnesium Alloy Castings*

(2) ASM Handbook, *Welding, Brazing, and Soldering Volume 6*

b. All stress relief of magnesium weldments shall be done in a furnace. Gas torch heating is prohibited. Temperature and time shall be as specified in table 1. Parts shall be cooled in still air.

Table 1. Stress Relief Temperatures and Hold Time

FORM	ALLOY	CONDITION	TEMPERATURE DEGREES	TIME (MINIMUM)
All	All	"O" (Annealed) "F" (As Fabricated)	500° + l0°	15 minutes
		"H" (Strain Hardened)	350° + l0°F	60 minutes

c. Additional information may be found in WP 007 05 MAGNESIUM for

d. The requirement for post weld heat treatment of magnesium alloys shall be performed per the component technical manual or other technical directive.

9. **POSTHEATING OF TITANIUM ALLOYS (GROUP VI).**

a. The general heat treat specifications for the processing of Titanium Parts are:

(1) AMS 2801, *Heat Treatment of Titanium Alloy Parts*

b. The requirement for post weld heat treatment of titanium alloys shall be performed per the component technical manual or other technical directive.

NOTE

Shot or flap peening must have engineering approval prior to application.

10. **SHOT-PEENING AFTER WELD.**

a. The heat-affected areas adjacent to a weld are nearly always in tension, which can decrease the fatigue life of the welded assembly. Shot-peening, by inducing a compressive stress in the surface can substantially increase the fatigue life of welded assemblies.

b. Even on static applications such as pressure vessels, tanks and piping, the peening of welds has been found very beneficial.

c. In shot-peening, the surface of the finished part is bombarded with round steel shot in special machines under full-controlled conditions. Every piece of shot acts as a tiny peening hammer. When the surface has been peened all over by the multitude of impacts, the resultant residually stressed surface layer, which is in compression, prevents the formation of cracks.

d. It is well known that a crack will not propagate into a compressed layer. As nearly all fatigue and stress corrosion failures originate at the surface of a part, the layer of compressive stress induced by shot-peening produce the tremendous increase in life which many industries have learned to use in their designs. The maximum compressive residual stress produced at or near the surface is at least as great as half the ultimate tensile strength of the material.

e. Shot-peening is used to eliminate failures of existing designs, or to allow the use of higher stress levels, which, in turn, permit weight reduction for new designs.

f. The object of controlled shot-peening is to produce a compressively stressed surface layer in which the amount of stress, the uniformity of the stress, and the depth of the layer can be held constant from piece to piece. As it is practically impossible to inspect the stress distribution on a finished part, the full control of all aspects of the process becomes imperative. The basic variables of stress, depth, and coverage are obtained in practice by the use of the right combinations of shot, exposure time, choice of air pressure or wheel speed, nozzle size, distance of nozzle from part, and angle between shot stream and peened surface. It is extremely important that the relative motion between shot stream and part be mechanized for uniformity and reproducibility.

g. Flap peening, a variant of shot peening is an acceptable alternative, when authorized by technical instructions.

THIS PAGE INTENTIONALLY LEFT BLANK

ORGANIZATIONAL, INTERMEDIATE AND DEPOT MAINTENANCE POST WELD CONTOURING

Reference Material

Specification for Fusion Welding For Aerospace Applications ..... AWS D17.1

Alphabetical Index

Subject **Page No.**

Purpose 2
As-Welded 2
Fatigue Consideration 3
Fillet Welds 5
Grinding and Dressing 7
Groove Welds 5
Start and Stops 2
Thinning of Base Metals 5

Record of Applicable Technical Directives

None

NOTE

This Work Package contains **GUIDANCE** information to supplement higher order technical document or instructions.

1. **PURPOSE.**

a. This work package provides the background and techniques for post weld contouring and is provided for guidance only.

b. In addition, this work package describes the technical aspects of the importance of contouring welds or leaving the weld in the as-welded condition.

c. Provide guidance to the welders for post weld improvement techniques for dressing or contouring welds using angle grinders and die grinders fitted with rotary burrs.

2. **STARTS AND STOPS.**

a. Welds which were improperly started or stopped may have insufficient weld metal available for solidification and result in a star shaped crater crack. If the crater cracks are not dressed to remove the defect, potentially further cracking may take place given the right conditions.

b. The crater cracks or starts and stops should be dressed into a diamond shaped taper (Figure 1) from the weld bead into the base metal. Do not dress the cracker crack into the shape of concavity or with a scalloped shape.

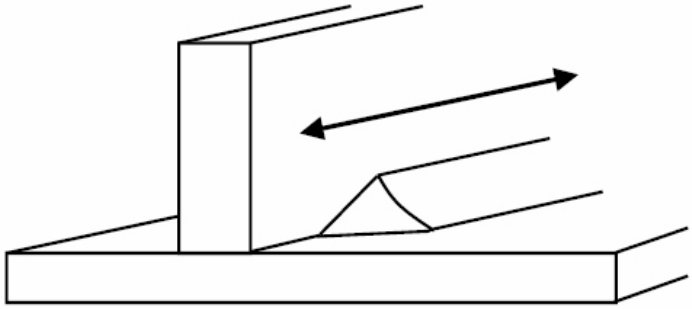

Figure 1. Blending Stop/Starts

c. Stop start should blend smoothly into the next weld bead and the previous weld bead.

d. Stop starts should not be positioned at the end of weld beads with fabricated stiffeners or gussets and should wrap around the stiffener or gusset as shown in Figure 2.

3. **AS-WELDED.**

a. As-welded condition is normally applied to welds where the final surface irregularities will not hinder the function of the weld; usually applied to support equipment where fatigue is not a consideration or contouring the weld is impractical because of time or cost.

b. The preferred method for addressing an as-welded weldment is using wire brushes.

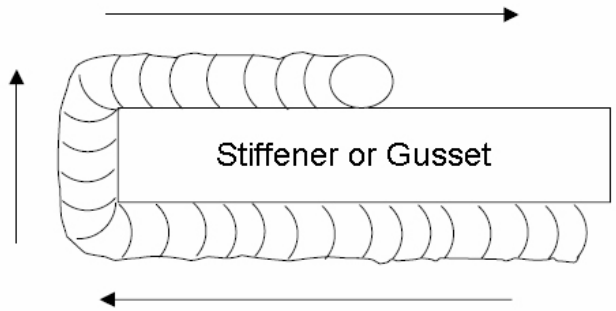

Figure 2. Wrapping a weld around a Stiffener or Gusset

c. Stainless steel wire brushes with 0.005 inch diameter strands should be assigned to each metal group and should never be crossed used, that is, never use a wire brush used on carbon steel to brush a titanium weldment.

d. Wire brushing is generally used to remove slag, smut, and discoloration of the weld and adjacent to the weld.

4. **FATIGUE CONSIDERATION.**

a. Slight imperfections that occur during welding may have significant impact to the overall performance of the welded structure, whether an engine component, welded tubing in a nacelle, or exhaust ducts on aircraft. The criteria set forth in welding specifications or component technical manuals are defined to permit certain size discontinuities as allowable to the weld to be certified fit-for-service and shall be heeded at all costs.

b. In an as-welded joint, which will not have a sufficient design life, some method of improving the fatigue performance needs to be found. There are a number of options available. The first and perhaps simplest is to move the weld from the area of highest stress range, the next is to thicken up the component or increase the weld size.

c. Shot peening can also be used to introduce compressive stresses at weld toes with equally good results. Compressive stresses can be induced in a component by overstressing where local plastic deformation at stress raisers induces a compressive stress when the load is released. This technique needs to be approached with some care as it may cause permanent deformation and/or any defects to extend in an unstable manner resulting in failure.

d. Alternatively, improving fatigue properties at the toe of the weld, Figure 3, may be utilized by the careful use of a disc grinder to dress the weld toe, but for best results the weld toe should be machined with a fine rotary burr as shown in Figures 4 and 5. Great care needs to be exercised to ensure that the operator does not remove too much metal and reduce the component below its minimum design thickness and that the machining marks are parallel to the axis of the main stress. The dressing should remove no base metal.

For example:

> Class A welds, defined by AWS D17.1, may allow some contouring into the base metal which should not exceed 0.002 inch for the length of the weld; with a single defect (length of the weld) at 7% of the base metal thickness.

e. All contouring should be sufficient to give a smooth blend and remove the toe intrusion. Ideally the dressing should remove no more than 1/64 inch depth of material, sufficient to give a smooth blend and remove the toe intrusion.

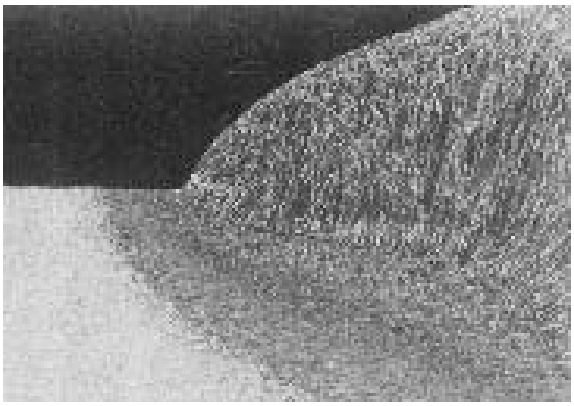

Figure 3. Toe of the weld – as-welded

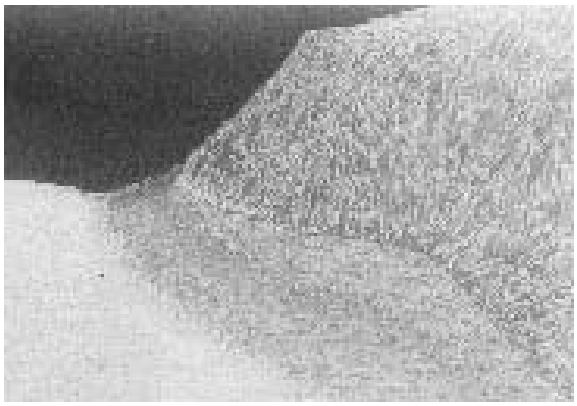

Figure 4. Toe of the weld dressed with rotary tool

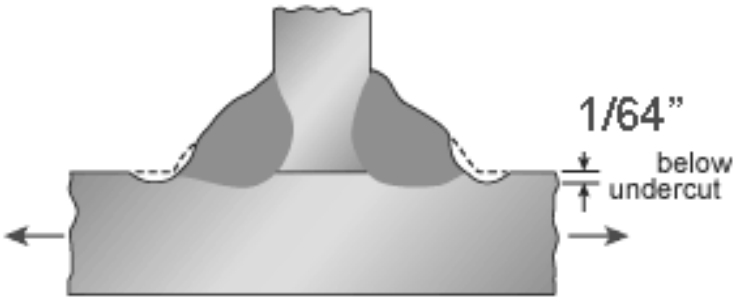

Figure 5. Cross-Section View of Toe Dressing

5. **THINNING OF BASE METAL.**

a. Thinning of the base metal usually occurs when the welder tries to dress a weld, whether a groove weld or a fillet weld, to ensure a smooth transition at the toe-of-the-weld.

b. Thinning usually results in failures adjacent to the weld bead and the shrinkage stress of the weld bead are sufficient to cause cracking.

6. FILLET WELDS.

a. Fillet welds generally do not require additional metal processing and any processing should be per equipment technical instruction.

b. Grinding fillet welds can improve fatigue by producing a smooth transition between weld fillet and base metal.

c. Using a rotary burr and concentrating on the removal of undercut (within limits) by producing a smooth transition between weld and base metal.

d. Grooves must not be introduced transverse to the applied stress or loads. All dressing marks should be parallel to the applied stress or load as shown in Figure 6.

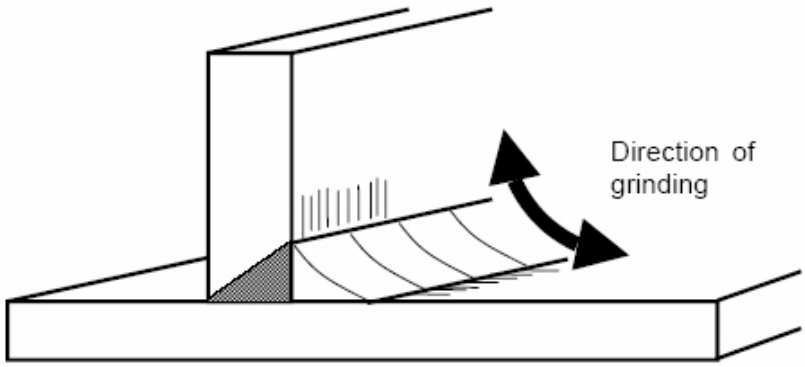

Figure 6. Fillet Weld Grinding

7. **GROOVE WELDS.**

NOTE

Grinding weld reinforcement is not necessary in most instances and if fatigue or air flow performance is a factor, the following is provided for guidance. Refer to equipment technical manual for specifics.

a. Post weld grinding involves two steps.

(1) Remove stop/starts and large weld solidification ripples.

(2) Finish grinding marks that run parallel to the weld bead or loads if applicable, as shown in Figure 7.

b. Removing reinforcement on both sides of the weld bead improves fatigue, if fatigue is an issue.

c. Weld reinforcement that is providing a smooth transition between reinforcement and base metal improves performance as shown in Figure 8.

d. Rough grinding with an angle grinder can be used to remove excess metal and finish grinding should be performed placing the grinding marks running parallel to the weld bead or load direction.

e. Alternatively, a rotary burr can be used to locally remove undercut (within limits) and provide a smooth transition between weld reinforcement and base metal.

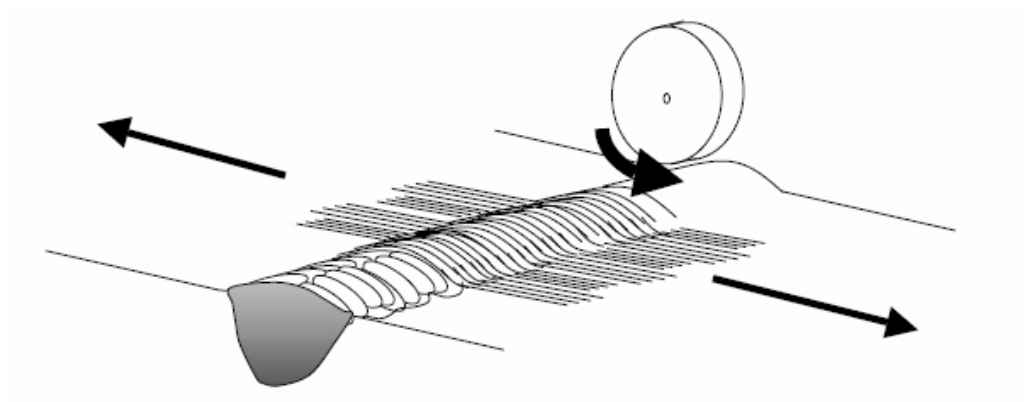

Figure 7. Grinding Transverse Butt Welds

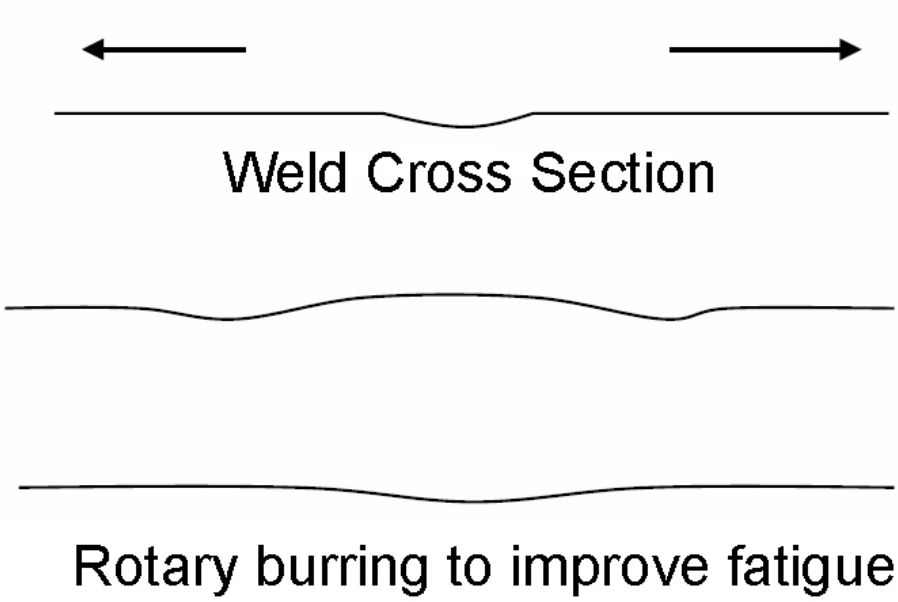

Figure 8. Two Variations of Weld Cross Sections

8. **GRINDING AND DRESSING.**

a. Grinding and dressing is to be carried out with iron-free brushes, abrasives, etc. and should not be so heavy as to discolor and overheat the metal.

b. Rubber and resin bonded wheels are satisfactory.

c. Wheels should be dressed regularly to prevent them becoming loaded thereby producing objectionable scratches.

d. In any blasting process steel shot shall not be used.

THIS PAGE INTENTIONALLY LEFT BLANK

ORGANIZATIONAL, INTERMEDIATE AND DEPOT MAINTENANCE

WELD VISUAL EXAMINATION

Reference Material

Nondestructive Inspection Methods, Basic Theory ..... NAVAIR 01-1A-16
Nondestructive Inspection Methods, Basic Theory ..... T.M. 1-1500-335-23
Nondestructive Inspection Methods, Basic Theory ..... T.O. 33B-1-1

Alphabetical Index

Subject **Page No.**

Arc Strikes 11
Defects 11
  Subsurface Defects 12
  Surface Defects 12
Discontinuity 4
  Cracks 7
    Crater (Star) Cracks 10
    Longitudinal Cracks 8
    Micro/Macro Fissures (Hot/Cold Cracks) 11
    Root Cracks (Hot Cracks) 11
    Throat Cracks 10
    Toe Cracks (Cold Crack) 11
    Transverse Cracks 8
    Type of Cracks 7
    Underbead (HAZ) Cracks (Cold Cracks) 11
  Inclusions (Metallic or Nonmetallic) 4
  Incomplete Fusion 6
  Incomplete Joint Penetration 6
  Overlap 7
  Porosity 4
  Types of Discontinuity 4
  Undercut 7
  Underfill 6
General 2
  Examination of Welds 2
Inspection Procedure 3
  Examples of Rejectable Welds 3
  Visual Examination 3

Record of Applicable Technical Directives

None

NOTE

This work package contains **GUIDANCE** information to supplement higher order technical document or instructions.

1. **GENERAL.**

a. Weld visual examination is an important part of a welder's responsibility for the welder has the most control over the outcome of the welding process. Upon completion of welding, a thorough examination of the weld is necessary to ensure that deleterious conditions are not remaining with the weld bead. This includes examining for adjacent weld bead defects, such as, undercut and underfill.

b. Visual examination here is defined as examination using the naked eye, alone or in conjunction with various magnifying devices, without changing, altering, or destroying the materials involved.

c. Acceptance criteria shall be per relevant technical instructions and not per this general series manual. The intent of this work package is to provide guidelines to the welder what constitutes an acceptable weld and an unacceptable weld.

2. **EXAMINATION OF WELDS.**

a. The welder shall physically inspect the completed weld for quality attributes, such as, uniformity, undercutting, and cracking, using 10 power magnification.

b. Welds shall blend into adjacent metal in gradual smooth curves. Under no conditions shall thickness of parent metal be reduced.

NOTE

Ensure that weld beads on gas/air paths are held to minimum height and are properly faired by blending to avoid flow disturbance. Failure to observe this precaution can result in engine operational difficulties.

c. Welds shall be sound, clean, and free from foreign material and internal and external defects that would adversely affect strength of weld.

NOTE

When welding near a hole, the metal between edge of hole and weld area may melt causing a condition called Melt Back. This is due to lack of metal to absorb heat of welding and can result in a V-shaped area at edge of hole. When this occurs, add weld material and restore the hole and surrounding area to original configuration.

d. Tack welds shall not be injurious to parent metal and shall not affect quality of final weld. Tack welds shall be completely contained within the final weld, unless otherwise specified.

e. Welds shall be free from excessive surface burning, spitting, and expulsion of metal, unless permitted.

f. Welds specified by like symbols on an illustration and on a given combination of type and thickness of material shall have a substantially uniform appearance.

3. **INSPECTION PROCEDURE.**

a. The finished weld should be inspected for undercut, overlap, surface checks, cracks, or other defects.

b. The degree of penetration and side wall fusion, extent of reinforcement, and size and position of the welds are important factors in the determination as to whether a welding job should be accepted or rejected because they all reflect the quality of the weld.

4. **EXAMPLES OF REJECTABLE WELDS.**

a. Welder induced.

(1) Undercut, Overlap, and Underfill

(2) Porosity

(3) Incomplete fusion

(4) Inclusions

(5) Arc Strike

(6) Incomplete Joint Penetration

(7) Wrong filler metal

b. Material induced.

(1) Wrong filler metal (Cracking)

(2) Delamination/Lamination

(3) Seams and Laps

(4) Porosity

(5) Lamellar tearing

c. Other

(1) Cracks

(2) Incomplete Joint Penetration

5. **VISUAL EXAMINATION.**

a. One of the most important aspects of welding is the examination of the final product. At this point the welder ensures that all preparations and welding techniques have produced a weld that is satisfactory for service.

NOTE

All weld acceptance criteria shall be in accordance with the applicable service repair manuals.

b. The contents of this work package is intended to inform the welder of the conditions a weld may encounter when examining a weld upon completion of work. Acceptance criteria for any weld is controlled by the component technical directive.

6. **DISCONTINUITY.**

a. Definition. An interruption of a desired weld profile or the insufficient weld metal such that the strength of the weld is compromised by its intended mechanical, metallurgical, or physical properties. A discontinuity could be the result of a defect but not necessarily a defect.

7. **TYPES OF DISCONTINUITIES.**

- Porosity (surface or sub-surface)
- Inclusions, metallic or nonmetallic
- Underfill
- Incomplete Fusion
- Incomplete Joint Penetration
- Overlap
- Undercut
- Lamination/Delamination
- Seams and Laps
- Lamellar tearing
- Crack
- Arc strike

8. **POROSITY (Figure 1).**

NOTE

Porosity which gathers or collects linearly may be considered as detrimental as a crack and may be rejected by NDI-RT.

a. Cause. Porosity results from gas trapped in the weld metal and not out gassing or releasing the atmosphere during solidification. The gas may be the shielding gas purposefully used to protect weld or from the break-down of the flux evolving gases to shield the molten weld metal from the atmosphere.

b. Prevention. Proper welding technique avoids gas formation and entrapment. Distribution of porosity can determine the type of fault, such as, clustered porosity is usually associated with starts and stops from improper arc initiation or termination. Uniformly distributed porosity or scattered porosity usually is related to improper cleaning or poor weld technique.

NOTE

Inclusions can cause loss of structural integrity and must be avoided.

9. **INCLUSIONS (METALLIC OR NONMETALLIC) (Figure 2).**

a. Cause. Inclusions are solids, as opposed to gas, that are entrapped within the weld puddle which could not float to the surface of the weld puddle and solidified. Inclusions are the generally the result of faulty welding technique or improper cleaning. Metallic inclusions are associated with tungsten flaking off during welding. Improper cleaning can leave sharp changes in geometry leaving non-metallic inclusions at the edges of the weld allowing irregular shaped slag or oxides to become trapped in between weld passes.

b. Prevention. Ensure each weld pass is properly cleaned using approved methods for non-metallic inclusions. Metallic inclusions, such as, tungsten must be removed prior to continue welding. Change the tungsten if splitting is observed.

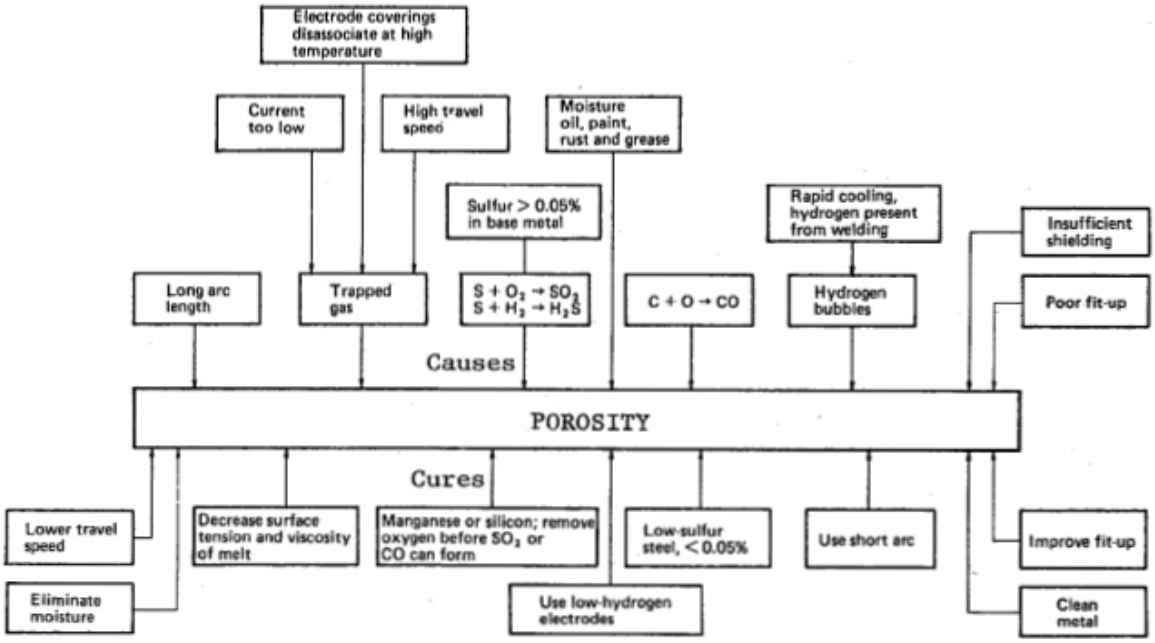

Figure 1. Porosity Causes and Cures

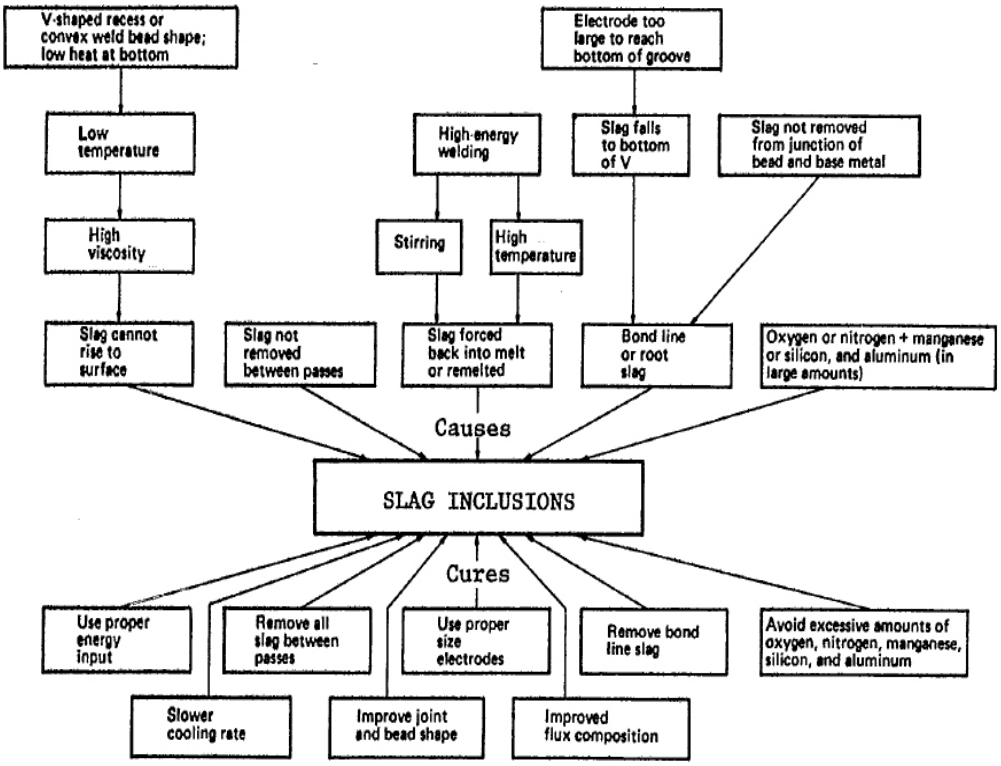

Figure 2. Slag Inclusions Causes and Cures

10. **UNDERFILL.**

a. Cause. Underfill can occur if insufficient weld metal is applied to the weld pass and the resulting weld pass is below the adjacent plane of the base metal.

b. Prevention. Ensure sufficient weld metal is added during the welding operation.

11. **INCOMPLETE FUSION (Figure 3).**

a. Cause. Incomplete fusion is the result of the liquid weld metal to wet or melt the adjacent base metal and is usually the result of not applying heat equally the weld joint. Sometimes incomplete fusion will result from the presence of an oxide hindering the weld joint from receiving sufficient arc heat.

b. Prevention. Ensure a clean, oxide free surface prior to welding or directing the arc welding heat equally to the weld joint.

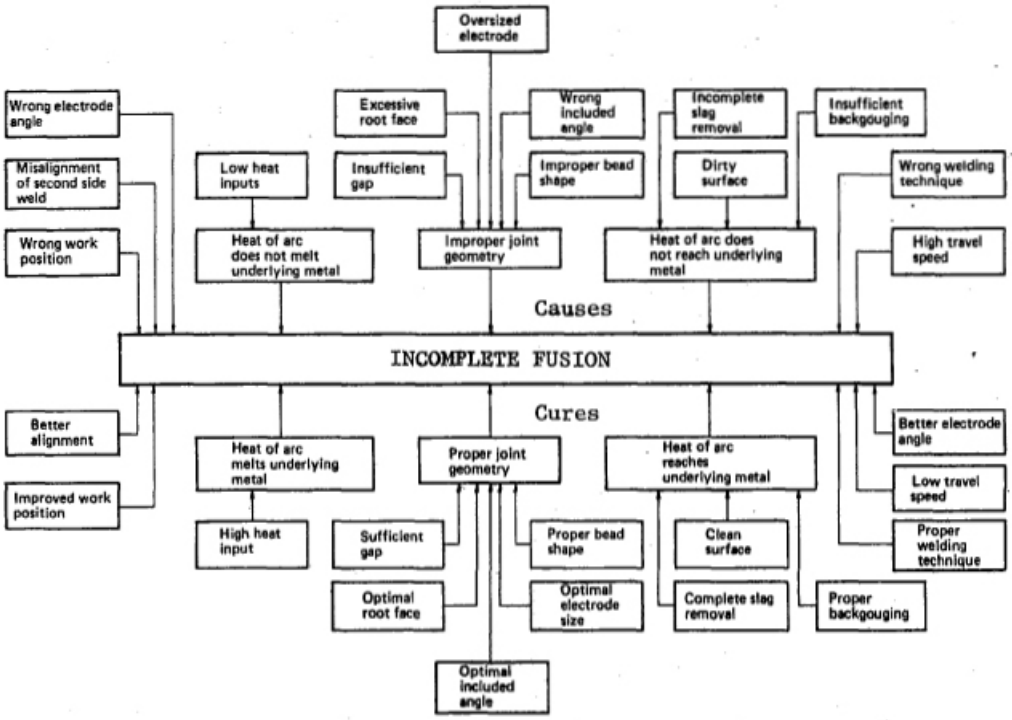

Figure 3. Incomplete Fusion Causes and Cures

12. **INCOMPLETE JOINT PENETRATION (Figure 4).**

a. Cause. Incomplete joint penetration may result from inadequate joint design hindering the welding arc and heat from penetrating into the joint or if the weld metal does not completely melt through the weld joint.

b. Prevention. Ensure the weld joint is properly configured for the appropriate welding process. Aluminum and nickel alloys require a wider or larger opening than carbon or stainless steel. Verify that sufficient amperage is applied to increase joint penetration.

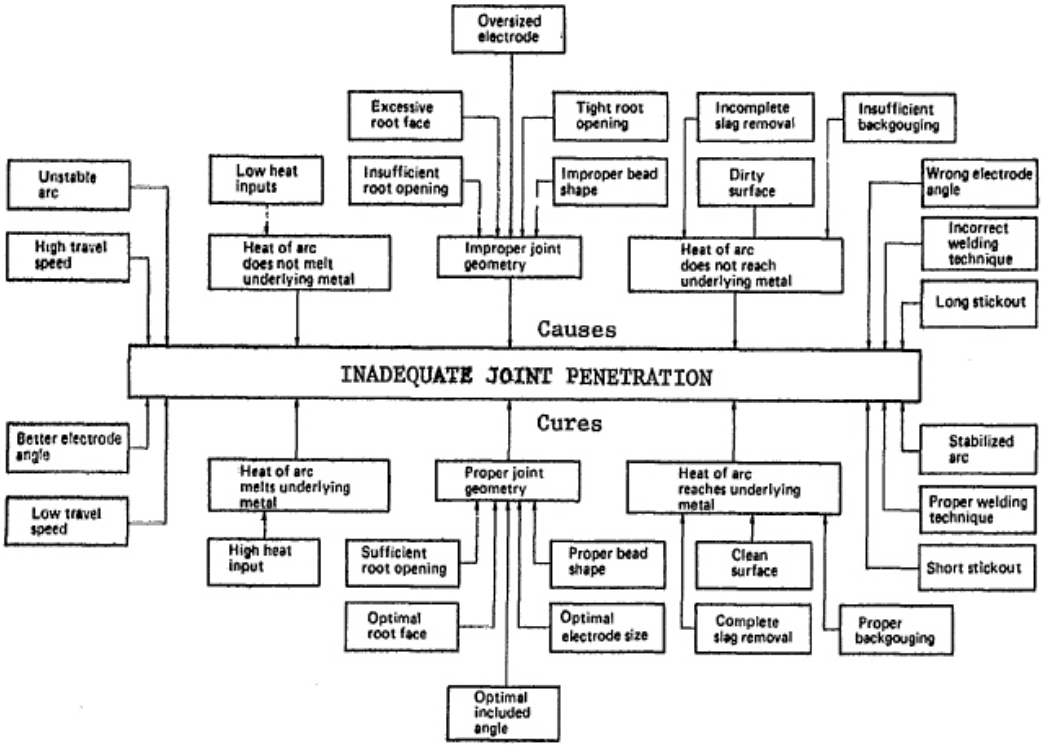

Figure 4. Inadequate Joint Penetration Causes and Cures

13. **OVERLAP.**

a. Cause. Overlap is a severe weld defect resulting from the toe of the weld rolling over onto the base metal without fusion. Some potential causes include oxides on the adjacent surface, incorrectly directly the arc welding heat or too low of welding travel speed.

b. Prevention. Proper cleaning of the weld area, adjusting the travel speed, flattening out the weld bead by ensuring the liquid weld pool is equally wetting adjacent surfaces.

14. **UNDERCUT.**

a. Cause. Melting the base metal on either side of the weld bead without sufficient welding heat or inappropriate electrode manipulation.

b. Prevention. A discontinuity as severe as a crack, the sharp change in geometry acts as a stress riser, intensifying parallel to the weld bead. This defect can be eliminated through careful selection of an appropriate weld settings for the thickness or orientation of the weld joint. Additionally, the orientation and control of the welding electrode along the weld joint.

15. **CRACKS (Figure 5).**

a. The formation of a crack from the localized stresses which exceed the tensile strength of the base metal. The stresses may be the result of notches, high residual stresses, hydrogen embrittlement with respect to the base metal. Cracks in the weld metal, depending on orientation, may be the result of contamination of the weld joint or poor weld bead placement increasing the residual stresses of the weld metal and the base metal. Cracks may be referred to 'Hot' cracks or 'cold' cracks.

(1) Hot cracks will develop at high temperatures and form preferentially upon cooling.

(2) Cold cracks form after the weld metal is solidified and are commonly cause from excessive hydrogen in a susceptible microstructure.

(3) Longitudinal cracks align with the toe of the weld and the Heat Affected Zone (HAZ). Longitudinal cracks may also be associated with centerline cracking of weld metal contamination from carbon, oils, or low melting point elements.

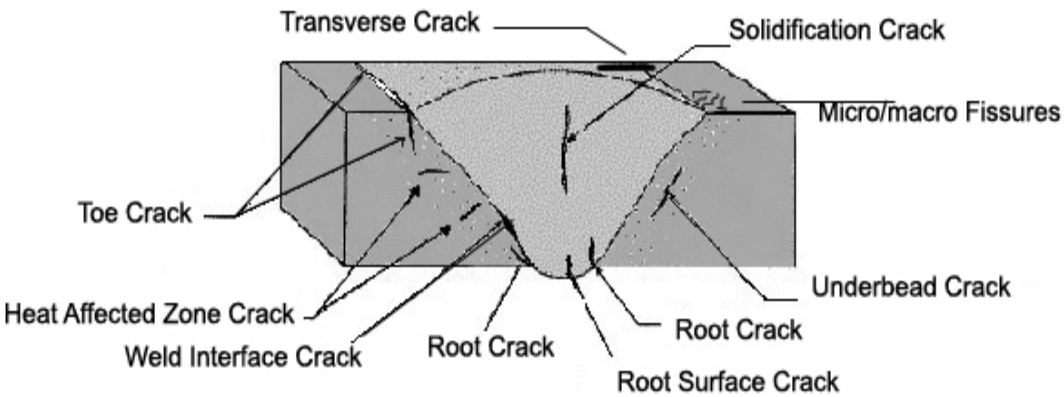

Figure 5. Examples of Weld Crack Locations

16. **Type of Cracks.**

HOT CRACKS (Figure 6).

- Develop at high temperatures and form on preferential solidification of alloys near the melting point.

COLD CRACKS (Figure 7).

- Develop after solidification is complete and often service related.

DELAYED CRACKS.

- Commonly caused by presence of hydrogen in a crack-susceptible microstructure subjected to stress.

17. **Longitudinal Cracks.**

a. Cause. Cracks aligned parallel to the weld bead.

b. Prevention. Preheat or fast cooling problem. Also caused by shrinkage stresses in high constraint areas.

18. **Transverse Cracks.**

a. Cause. Perpendicular to the weld bead and remain primarily in the weld and can be found to extend into the HAZ and the base metal.

b. Prevention. Weld metal hardness problem.

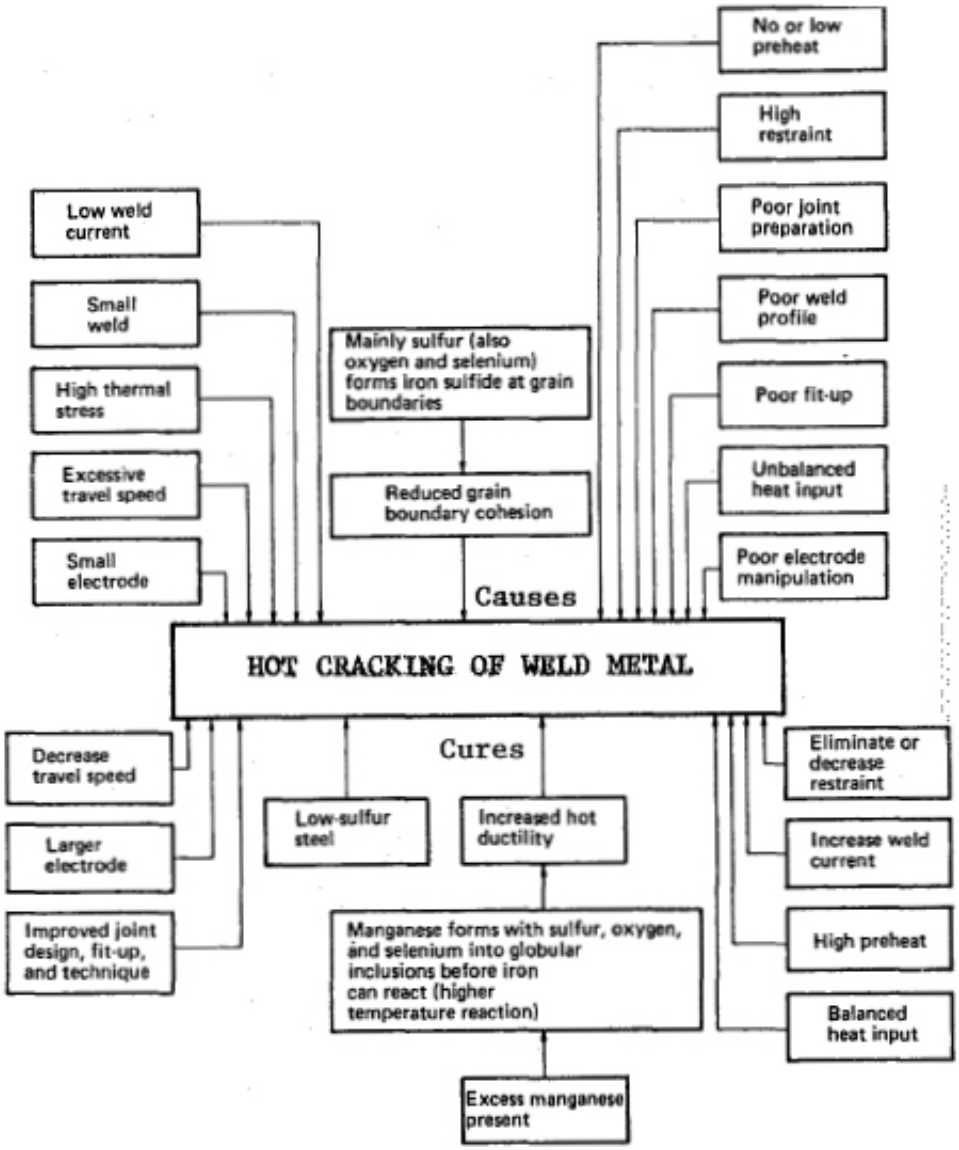

Figure 6. Hot Cracking Causes and Cures

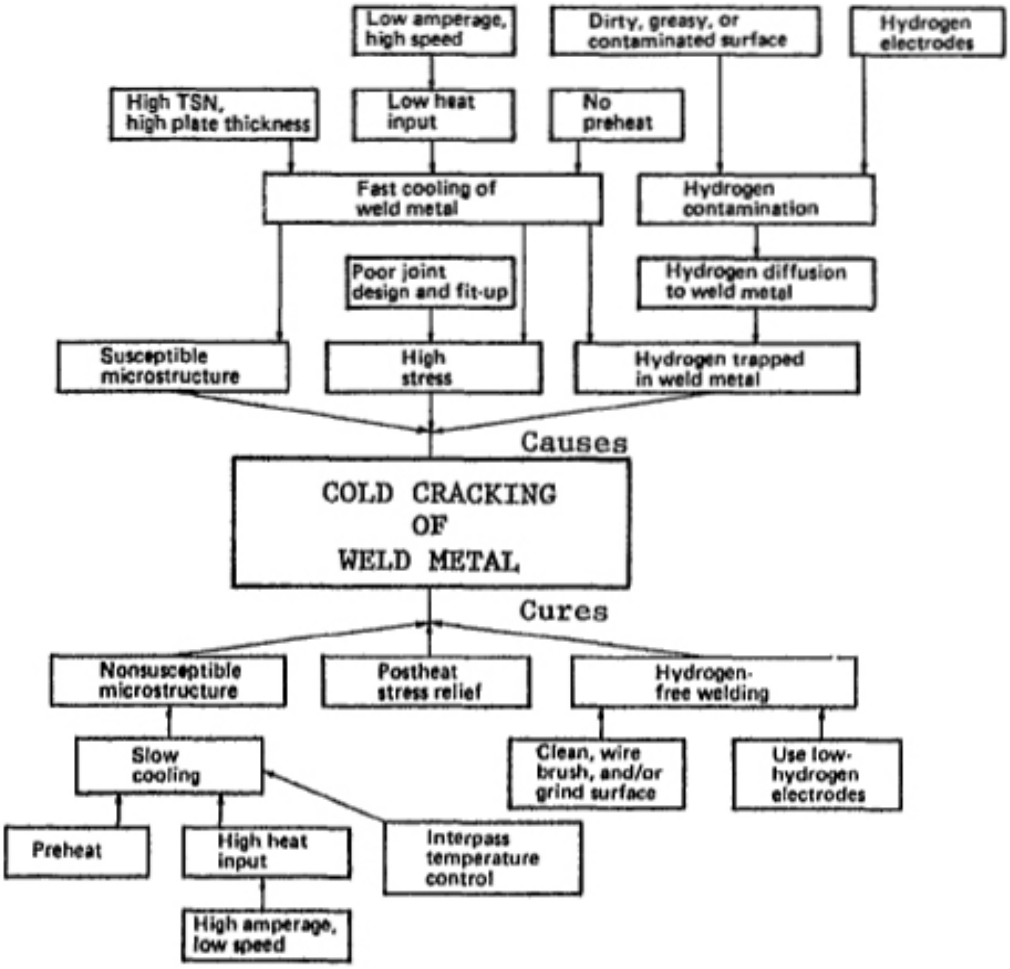

Figure 7. Cold Cracking Causes and Cures

19. **Crater (Star) Cracks.**

a. Cause. Formed by improper termination of the weld pass and are considered hot cracks as they are formed upon solidification of the weld metal.

b. Prevention. Ensure sufficient weld metal is present when terminating the arc. The resulting crater crack is generally shallow and minimal grinding will eliminate the crack.

20. **Throat Crack.**

a. Cause. A longitudinal crack forming in the throat of a fillet or groove weld. Transverse Stresses, probably from shrinkage. Indicates inadequate filler metal selection or welding procedure. May be due to crater crack propagation.

b. Prevention. Use correct filler metal. Grind starts and stops to remove crater cracks.

21. **Toe Cracks (Cold Crack).**

a. Cause. Grow from the weld toe into the HAZ or base metal when residual stresses are high from excessive weld reinforcement or concavity. Start perpendicular to metal surface and tend to follow the curve of the weld metal and HAZ.

b. Prevention. Minimize or eliminate excessive weld metal reinforcement and ensure sufficient weld metal cross-section is not less than adjacent base metal. Immediately upon completion of welding and if permitted, use a rotary burr and small diameter bit and lightly dress the toe of the weld.

22. **Root Cracks (Hot Cracks).**

a. Cause. Longitudinal cracks located in the root of the weld.

b. Prevention. Use lower welding parameters.

23. **Underbead (HAZ) Cracks (Cold Cracks).**

a. Cause. When three simultaneous conditions occur (1) hydrogen, (2) high strength steel (~RHc30 or higher) and (3) high residual stress. Usually short in length and can occur transverse or longitudinal in the HAZ.

b. Prevention. Ensure weld procedure is followed when a soaking preheat is required prior to welding. Use new or recently baked welding electrodes (low hydrogen). Allow time for post weld soaking at least at the preheat temperature.

24. **Micro/Macro Issures (Hot/Cold Cracks).**

a. Cause. Small or moderate size separations along grain boundaries.

b. Prevention. In aluminum, may be seen in the HAZ when excessive High-Frequency etching occurs.

25. **ARC STRIKES.**

a. Cause. Unintentional melting or heating outside the intended weld deposit. Usually caused by the welding arc but can be produced by improper secured work connection during welding. The resulting arc strike is a small re-melted area that can be a source of undercutting, hardening, or localized cracking. A most serious discontinuity when applied to quench and tempered steel.

b. Prevention. Ensure full control of the welding electrode is making contact within the intended weld zone.

26. **DEFECTS.**

a. Each weld shall be inspected visually for defects, and by one or more of the following methods.

- Fluorescent Penetrant inspection (including liquid penetrant inspection).
- Radiographic inspection -Weld deposit quality requirements.

b. When the applicable engineering drawing calls for radiographic inspection, the welds shall be inspected in accordance with service specific Non-destructive technical manuals (T.O. 33B-1-1 / NA 01-1A-16 / TM 1-1500-335-23). Weldments containing defects of the following types and proportions are not acceptable.

- Cracks of any size in the weld metal or adjacent to the weld.

- Inclusions (including tungsten), unfused areas and/or lack of weld joint preparation.
- Single porosity cavities measuring 10% of the thickness of the thinnest material in the joint or 0.020 whichever is the lesser. Inter-connected porosity shall be considered as a single cavity. Measurement of all porosity cavities shall be based on their largest dimension.

a. Three or more single porosity cavities in alignment, any one of which measures 10% of ”T” of the thinner material or 0.001 inch, whichever is the lesser, in any lineal inch or less of weld.

b. Scattered porosity, when the sum of the dimensions of all the cavities in any 50T length of weld equals 0.5T or greater.

NOTE

Weld deposits which will receive subsequent forming operations shall be radiographically inspected prior to and after the forming operation.

27. **SURFACE DEFECTS.**

a. Welds containing the following defects shall be unacceptable.

- Cracks in the base metal or weld bead.
- Craters containing cracks, porosity open to the surface, concavity extending below the surface of the base metal, or lack of penetration below the crater surface.
- Lack of fusion between the weld metal and the base metal.
- Fillet or corner craters which extend below the minimum throat dimension.
- Overlap on a weld deposit or weld toe.
- Atmospheric contamination caused by inadequate inert gas coverage. (Evidenced by the presence of oxide discoloration on or adjacent to the weld bead).
- Pin holes or porosity open to the surface.
- Penetration defects such as under bead concavity, suck back and incomplete penetration.
- Thinning and undercutting which removes metal adjacent to the weld by any means below the limits of the engineering drawing.

28. **SUBSURFACE DEFECTS.**

a. Subsurface defects (radiographic inspection). Welds containing any of the following subsurface defects shall be unacceptable when radiographic inspection is specified in the engineering drawing.

- Cracks in the welds or base metal.
- Lack of fusion between multi-pass welds or between weld and base metal.
- Incomplete penetration.
- Inclusions such as slag (other than chamber welding) oxides or tungsten.
- Porosity, gas holes and cavities.

SUPPLEMENT

TECHNICAL MANUAL

INTERMEDIATE AND DEPOT LEVEL MAINTENANCE INSTRUCTIONS

AERONAUTICAL EQUIPMENT WELDING

This supplement supersedes TO 00-25-252C, dated 16 December 2010.

This publication supplements TO 00-25-252, dated 1 September 2009. Reference to this supplement will be made on the title page of the basic manual by personnel responsible for maintaining the manual in current status.

COMMANDERS ARE RESPONSIBLE FOR BRINGING THIS SUPPLEMENT TO THE ATTENTION OF ALL AFFECTED PERSONNEL.

DISTRIBUTION STATEMENT A - Approved for public release; distribution is unlimited. PA Case Number 10-12090. Submit recommended changes or problems with this Technical Order to 406 SCMS/GULAC, Robins AFB, GA 31098. Questions concerning technical content shall be referred to 403 SCMS/GUEEA.

Published Under Authority of the Secretary of the Air Force

15 APRIL 2011

1. WP 005 02, page 3, Table 1 of the basic manual is amended as follows:

FIXTURE DRAWING	NO.
T JOINT WELDING BASE ASSEMBLY	8030683

NOTE

There are two page 3s in WP 005 02. The first page 3 should be page 2. This will be corrected by the Navy upon the next update.

2. WP 005 02, first page 3, paragraph 1.b.(2) of the basic manual is amended to read as follows:

   (2) Qualification of the WPS (for certification) will be accomplished by the cognizant engineer using the requirements of ANSI/AWS D17.1:2001.

3. WP 005 02, first page 3, paragraph 1.c of the basic manual is amended to read as follows:

   c. Active Duty, Reserve, and Air National Guard will qualify to the 6G-position. (Note limitation on thin materials WP 005 00, Table 1, note 1.) The MAJCOM Fabrication Superintendent or designation shall establish which base metal groups are required for certification. Base metal groups may vary by operating location.

4. WP 005 04, page 8, paragraph 7 of the basic manual is amended to read as follows:

7. **GENERAL**. Radiographic Safety is contained in TO 33B-1-1 (NAVAIR 01-1A-16, TM 1-1500-335-23). Radiographic Safety precautions contained in this technical order shall be adhered to prevent serious personnel injury. ASTM E-1742 and TO 33B-1-1 (NAVAIR 01-1A-16, TM 1-1500-335-23) contain the guidelines necessary for development of an appropriate welder certification technique. Techniques must be developed and documented using this guidance.

THE END