TO 00-25-245

TECHNICAL MANUAL

OPERATIONS INSTRUCTIONS

TESTING AND INSPECTION PROCEDURES FOR PERSONNEL SAFETY AND RESCUE EQUIPMENT

F09603-81-C-0108

DISTRIBUTION STATEMENT A - Approved for public release; distribution is unlimited. PA Case Number 05-07412. Submit recommended changes or problems with this Technical Order to 406 SCMS/GULAC. Questions concerning technical content shall be referred to WR-ALC/GRVCAA.

BASIC AND ALL CHANGES HAVE BEEN MERGED TO MAKE THIS A COMPLETE PUBLICATION

Published Under Authority of the Secretary of the Air Force

1 SEPTEMBER 2006 **CHANGE 2 - 21 OCTOBER 2010**

LIST OF EFFECTIVE PAGES

INSERT LATEST CHANGED PAGES. DESTROY SUPERSEDED PAGES.

NOTE: The portion of the text affected by the changes is indicated by a vertical line in the outer margin of the page. Changes to illustrations are indicated by shaded or screened areas, or by miniature pointing hands.

Dates of issue for original and changed pages are:

Original. . . . . .0 . . . 1 September 2006 Change . . . . . .2 . . . . .21 October 2010
Change . . . . . .1 . . . . . .17 April 2008

TOTAL NUMBER OF PAGES IN THIS PUBLICATION IS 40, CONSISTING OF THE FOLLOWING:

Page No.	*Change No.	Page No.	*Change No.	Page No.	*Change No.
Title	2				
A	2				
i - ii	1				
iii	0				
iv Blank	0				
v	0				
vi Blank	0				
vii	0				
viii Blank	0				
1-1	0				
1-2 Blank	0				
2-1	2				
2-2 - 2-4	0				
3-1	0				
3-2	1				
3-3	0				
3-4 Blank	0				
4-1 - 4-4	0				
5-1 - 5-16	0				

*Zero in this column indicates an original page.

TABLE OF CONTENTS

Chapter		Page
	LIST OF ILLUSTRATIONS	iii
	LIST OF TABLES	iii
	FOREWORD	v
	SAFETY SUMMARY	vii
1	INTRODUCTION AND GENERAL INFORMATION	1-1
1.1	Description of Manual	1-1
1.2	Use and Applicability	1-1
1.2.1	Scope	1-1
2	PROCEDURES FOR SAFETY BELTS, STRAPS, AND HARNESSES	2-1
2.1	General	2-1
2.2	Storage Requirements	2-1
2.3	Shelf Life	2-1
2.4	Types of Inspection	2-2
2.4.1	Initial Inspection	2-2
2.4.2	User Inspection	2-2
2.4.3	Period Inspection	2-2
2.5	Inspection	2-2
2.6	Defects	2-3
2.7	Marking and Disposition	2-3
2.7.1	Unserviceable Belts, Harnesses, and Straps	2-4
2.8	Cleaning	2-4
3	RESTRAINT ASSEMBLIES, SAFETY NETS, ESCAPE ROPES, LANYARDS, AND LIFELINES	3-1
3.1	General	3-1
3.2	Escape Ropes, Lanyards, and Lifelines	3-1
3.2.1	Inspection	3-1
3.2.2	Ropes	3-2
3.3	Safety Nets	3-2
3.4	Restraint Assemblies	3-2
3.5	Shock Absorbers	3-3
4	RESCUE SEATS AND BASKETS	4-1
4.1	General	4-1
4.2	Storage Requirements	4-1
4.3	Shelf Life	4-1
4.4	Testing MA-1 Rescue Basket	4-1
4.5	Testing Rescue Seat Forest Penetrator	4-1
4.5.1	Strength	4-1
4.5.2	Safety Straps	4-1
4.5.3	Floatability	4-1
4.6	INSPECTION	4-1
4.7	Testing Boyd Helicopter Rescue Seats	4-2
4.7.1	Strength	4-2
4.7.2	Leakage and Floatability	4-2
4.7.3	Inspection	4-2
5	SEARCH AND RESCUE (SAR) EQUIPMENT	5-1
5.1	General	5-1
I	RESCUE LITTER ASSEMBLY (STOKES LITTER)	5-1
5.2	Description	5-1
5.3	Configuration	5-1
5.4	Maintenance	5-1
5.5	Special Inspection	5-1
II	RESCUE LITTER FLOTATION ASSEMBLY (REU-2/N)	5-2
5.6	Description	5-2
5.7	Configuration	5-2
5.8	Application	5-2
5.9	Maintenance	5-2
5.9.1	Special Inspection	5-2
5.10	Float Test	5-3
III	HOISTING SLING ASSEMBLY	5-3
5.11	Description	5-3
5.12	Configuration	5-3
5.13	Maintenance	5-3
5.13.1	Special Inspection	5-3
5.14	Proof Load Test (Working Load Test)	5-4
IV	RESCUE STROP AND CABLE WEIGHT COVER	5-6
5.15	General	5-6

TABLE OF CONTENTS - Continued

Chapter		Page
5.16	Configuration	5-6
5.17	Application	5-6
5.18	Function	5-6
V	MODIFICATION	5-6
5.19	GENERAL	5-6
VI	MAINTENANCE OF THE RESCUE STROP AND CABLE WEIGHT COVER	5-9
5.20	General	5-9
5.21	Inspection	5-9
5.22	Calendar Inspection	5-9
5.23	Visual Inspection	5-9
5.23.1	Marking Inspection	5-9
5.23.2	Proof Load Test	5-9
5.24	Cleaning	5-10
5.25	Repairs	5-11
5.26	Packing	5-11
VII	RANDON TECH ROPE LADDER (HH-60 ELD800PD SERIES AND TCL600)	5-11
5.27	General	5-11
5.28	Configuration	5-11
5.28.1	HH-60 and H-1 Helicopters	5-11
5.28.2	MH-53 Helicopters	5-11
5.29	Application	5-11
5.30	Function	5-11
VIII	MAINTENANCE OF ROPE LADDER (HH-60 ELD800PD SERIES)	5-12
5.31	General	5-12
5.31.1	Service Life Expectancy	5-12
5.32	Inspection	5-12
5.33	Live Use Preflight Inspection	5-12
5.34	Rope Ladder Post-flight and Cleaning	5-13
5.35	Repairs	5-13
5.36	Storage Requirements	5-13
IX	MAINTENANCE OF ROPE LADDER (TCL600)	5-15
5.37	Live Use Preflight Inspection	5-15
X	FRIES/FAST ROPES (MIL SPEC: MIL-F-44422)	5-15
5.38	General	5-15
5.39	Configuration	5-16
5.40	Application	5-16
5.41	Function	5-16
XI	FRIES/FAST ROPES MAINTENANCE AND INSPECTION (MIL SPEC: MIL-F-44422)	5-16
5.42	Inspection	5-16
5.43	Cleaning	5-16
5.44	Storage	5-16

LIST OF ILLUSTRATIONS

Number	Title	Page
2-1	Safety Strap	2-1
2-2	Safety Harness and Life Line	2-3
3-1	Restraint Kit Assembly	3-1
3-2	Shock Absorbers	3-3
3-3	Safety Net	3-3
4-1	MA-1 Rescue Basket	4-2
4-2	Forest Penetrator Rescue Seat	4-3
4-3	Boyd Rescue Seat	4-4
5-1	Hoisting Sling Assembly (One Set)	5-4
5-2	Rescue Litter Assembly	5-5
5-3	Rescue Strop	5-7
5-4	Rescue Strops Retainer Straps Pulled Out	5-7
5-5	Rescue Strop, Parts Nomenclature	5-8
5-6	Cable Weight Cover Parts Nomenclature	5-8
5-7	Fraying Example	5-14
5-8	Cut Example	5-14
5-9	Good Rivet and Fabric Example	5-15

LIST OF TABLES

Number	Title	Page
5-1	Rescue Strop Directives	5-6
5-2	Rescue Strop Markings	5-10
5-3	Cable Weight Cover Markings	5-10

FOREWORD

1. PURPOSE OF MANUAL.

This technical order is to provide procedures and guidelines for periodic testing of personnel safety and rescue type equipment, for the most part found in FSG 4200. This includes industrial safety belts and straps, industrial type safety harnesses, restraint harness (ground use), safety nets and ropes, and rescue seats and baskets.

2. CONTENTS OF MANUAL.

Chapter 1	Introduction and General Information.
Chapter 2	Procedures for Safety Belts, Straps and Harnesses.
Chapter 3	Restraint Assemblies, Safety Nets, Escape Ropes, Lanyards, and Lifelines.
Chapter 4	Rescue Seats and Baskets.
Chapter 5	Search and Rescue (SAR) Equipment

3. RELATED PUBLICATIONS.

The following publications will provide the operator with sufficient supplementary data for testing and inspection of safety and rescue equipment.

List of Related Publications

TO Number	Title
TO 00-5-1	Air Force Time Compliance Technical Order Process.
AFI 91-301	Air Force Occupational and Environmental Safety, Fire Protection, and Health (AFOSH) Program.
AFOSH STD 91-501	Air Force Consolidated Occupational Safety Standard.
AA-208B	Ink, Marking Stencil, Opaque (Porous and Non-Porous Surfaces).
TO 13A-5-1	Operation Service and Repair Instructions with IPB Personnel Restraint Kit.
TO 1-1-169	Aircraft Weapons Systems Cleaning and Corrosion Control.
TO 14S6-3-1	Forest Penetrator, Rescue Seat Assembly, P/N K26-1000-5 and K26-1000-9.

4. ABBREVIATIONS AND SYMBOLS.

For definitions of standard abbreviations and acronyms used in this manual, refer to ASME-Y14.38. Non-standard abbreviations and acronyms in this manual are defined below:

None.

SAFETY SUMMARY

1. GENERAL SAFETY INSTRUCTIONS.

This manual describes physical and chemical processes which may cause injury or death to personnel, or damage to equipment if not properly followed. This safety summary includes general safety precautions and instructions that must be understood and applied during operation and maintenance to ensure personnel safety and protection of equipment. Prior to performing any task, the WARNINGs, CAUTIONs, and NOTEs included in that task shall be reviewed and understood. If questions arise about any of the information presented in the manual, contact the manufacturer for clarification before operation.

2. WARNINGS, CAUTIONS AND NOTES.

WARNINGs and CAUTIONs are used in this manual to highlight operating or maintenance procedures, practices, conditions or statements which are considered essential to protection of personnel (WARNING) or equipment (CAUTION). WARNINGs and CAUTIONs immediately precede the step or procedure to which they apply. WARNINGs and CAUTIONs consist of four parts: heading (WARNING or CAUTION), a statement of the hazard, minimum precautions, and possible result if disregarded. NOTEs are used in this manual to highlight operating or maintenance procedures, practices, conditions or statements which are not essential to protection of personnel or equipment. NOTEs may precede or follow the step or procedure, depending upon the information to be highlighted. The headings used and their definitions are as follows:

WARNING

Highlights an essential operating or maintenance procedure, practice, condition, statement, etc., which if not strictly observed could result in injury to, or death of, personnel or long term health hazards.

CAUTION

Highlights an essential operating or maintenance procedure, practice, condition, statement, etc., which if not strictly observed could result in damage to, or destruction of, equipment or loss of mission effectiveness.

NOTE

Highlights an essential operating or maintenance procedure, condition, or statement.

3. SAFETY PRECAUTIONS.

The following are broad electronics maintenance safety precautions related, in general, to all of the maintenance and operation procedures covered by this technical order (TO). These safety precautions may not necessarily appear again in this TO, together with those procedures with which they apply. Maintenance personnel shall read, understand, and apply these precautions during any applicable maintenance operation. In addition, operators should be thoroughly familiar with applicable safety regulations as stated in AFI 91-301

4. KEEP AWAY FROM LIVE CIRCUITS.

Do not replace components or make adjustments inside the equipment with electrical power present or hooked up. Also, under some conditions, dangerous hazards may exist with power turned off and power source not hooked up. Hazardous electrical potentials may exist at such times because of electrical charges stored in capacitor circuits. To avoid injuries, always unhook electrical power and then discharge and ground any circuit before touching it. Follow all safety interlock requirements.

5. DO NOT SERVICE OR ADJUST EQUIPMENT WHILE ALONE.

Do not attempt maintenance operations where shock potential exists unless another person qualified to render first aid and resuscitation is present.

6. RESUSCITATION.

Personnel working with or near dangerous voltages or hazardous materials must be qualified on approved methods of resuscitation. For information on first aid or resuscitation, contact your supervisor or the Base Office of Bioenvironmental Health.

CHAPTER 1
INTRODUCTION AND GENERAL INFORMATION

1.1 DESCRIPTION OF MANUAL.

Procedures contained herein are considered mandatory and no deviation is permitted. Primary importance of this technical manual is to make sure that safety and rescue equipment outlined herein is safe for accomplishment of tasks for which they were initially designed. Comments and recommendations for improvements to this manual will be submitted in accordance with TO 00-5-1.

1.2 USE AND APPLICABILITY.

Safety officers shall be responsible for monitoring to make sure that safety and rescue equipment described herein is periodically tested as outlined. He shall assist in determining serviceability or rejection of equipment being tested or inspected. The supervisor responsible for safety/rescue equipment is responsible for making sure that the equipment described herein is periodically inspected or tested. All tests and inspections directed herein shall be accomplished at organizational/field level maintenance.

1.2.1 Scope. The provisions of this technical order are applicable to all commands and separate operating agencies of the USAF, AF Reserve, and the Air National Guard.

CHAPTER 2
PROCEDURES FOR SAFETY BELTS, STRAPS, AND HARNESSES

2.1 GENERAL.

Industrial type safety belts, straps, harnesses, rescue slings, wrist harness, boatswain harness/chairs and miscellaneous belts harness etc., shall be utilized for their intended purpose only. During use, care should be exercised to prevent them from contact with moisture, hydraulic fluids, oil, grease, fuel, steam pipes, or other like heat sources. In the event they become wet, they shall be dried without the aid of artificial heat, i.e., at room temperature. In the event oils and lubricants come in contact with these, they shall be wiped and cleaned as soon as possible to prevent saturation and absorption. Typical straps and harnesses are shown in Figures 2-1 and 2-2. (Industrial safety belts are not shown.) While in service use the equipment described in this chapter shall be visually inspected by utilizing personnel as outlined in following paragraphs. Nylon belts shall not be used in areas where acid conditions exist. Polyester or polypropylene belts, harnesses, straps, etc., shall not be used where caustic conditions exist or in temperatures exceeding 180 °F. Leather straps shall not be used in temperature above 150 °F. Extra holes shall not be punched in this equipment.

2.2 STORAGE REQUIREMENTS.

Safety belts, straps, and harnesses will be stored in their original shipping containers when possible in a cool dry place until they are issued or worn. When not in use they shall be stored in any well ventilated area supported on slats or hung in loose coils. Do not store in areas where they could be subjected to mechanical or chemical damage. Where possible storage of these items should be in a temperature range of 35 to 100 °F and out of direct sunlight. The term "dry" is usually used to denote an area where condensation (moisture) does not come in contact with the containers or their contents. An example would be storing the packages in a building away from its wall and in pallets. Periodic examinations of the storage containers should be made more frequently when storage containers vary from the ideal. Therefore, if the belts, straps, and harnesses are stored properly and meet the inspection requirements outlined they can be considered safe for day-to-day use. Exception, when stored for use on aircraft, safety belts, straps, and harnesses will be stored in bag PN 5140004736256, or equivalent. All safety equipment will be dry when stored in this bag. All users will perform a thorough inspection prior to use on all equipment before each use.

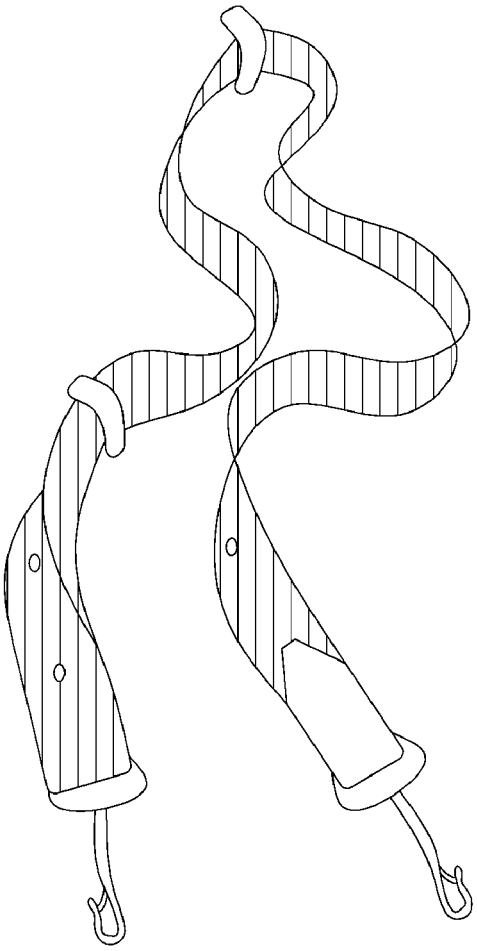

Figure 2-1. Safety Strap

2.3 SHELF LIFE.

There is no chronological service life for this equipment. User should rely on a visual inspection of condition on a daily basis and remove equipment from service when it shows excessive wear or deterioration.

2.4 TYPES OF INSPECTION.

Inspection of belts, straps, harnesses, etc., described in this chapter shall consist of the following types:

2.4.1 Initial Inspection. Before using new equipment, it shall be inspected to make sure that proper equipment is being used for the function for which it was designed, possible manufacturers' defects, and that it meets requirements of this handbook.

2.4.2 User Inspection. This inspection shall be made by the person handling or using this equipment each time it is used. This inspection is visual for obvious defects, general condition area.

2.4.3 Period Inspection. This inspection shall be conducted by personnel qualified in the use of this equipment, usually 7 or 9 level. Where possible this inspection will always be made by the same personnel. Frequency of inspection will be based on the following:

a. Frequency of use.

b. Severity of service conditions.

c. Experience gained when used in similar circumstances.

NOTE

Periodic type inspection of industrial safety belts, harnesses, and straps (including lanyards), as defined in AFOSH Std 91-501 shall not exceed 6 months. This inspection should coincide with the quarterly cleaning and semi-annual dressing requirements, if applicable.

2.5 INSPECTION.

Belts, straps, harnesses, lanyards, life lines, etc., constructed of nylon (impregnated with neoprene or equal) shall be inspected for the following defects, any one of which shall be cause for rejection of the piece of equipment being inspected.

a. Delamination of plies.

b. Missing, loose, broken, or distorted parts (except miscellaneous parts such as tape thongs, plier pouches, etc.).

c. Abrasion marks resulting in rupture exceeding ten percent of width or one inch in length.

d. Any hole, cut, or tear.

e. Frayed edges or smashes.

f. Excessive soiling.

NOTE

Excessive soiling is defined as any type of soiling that covers up the web fibers to the point that it prohibits the user or inspector from inspecting for defects in accordance with the tech order.

g. Broken, worn, loose or missing rivets or stitching.

h. Broken, cracked, or deformed D rings, snaphooks, plates, and buckles.

i. Snap hook keeper latch, bent, broken, or missing.

j. Surface corrosion of metal parts. (Reject only when pitted).

k. Acid or caustic burns.

l. Melting or charring of any part of surface.

m. Slippage of webbing through buckles and adjusters.

NOTE

Fraying, cuts, abrasions, etc., of the body pad portion of the belt, which is a nonstress or nonsupporting area, are not considered critical. Any of cited defects which are directly related to the waist belt portion of the belt, which is supporting and subject to stress, are considered critical and rejection shall be done accordingly.

n. Absence of or illegible markings.

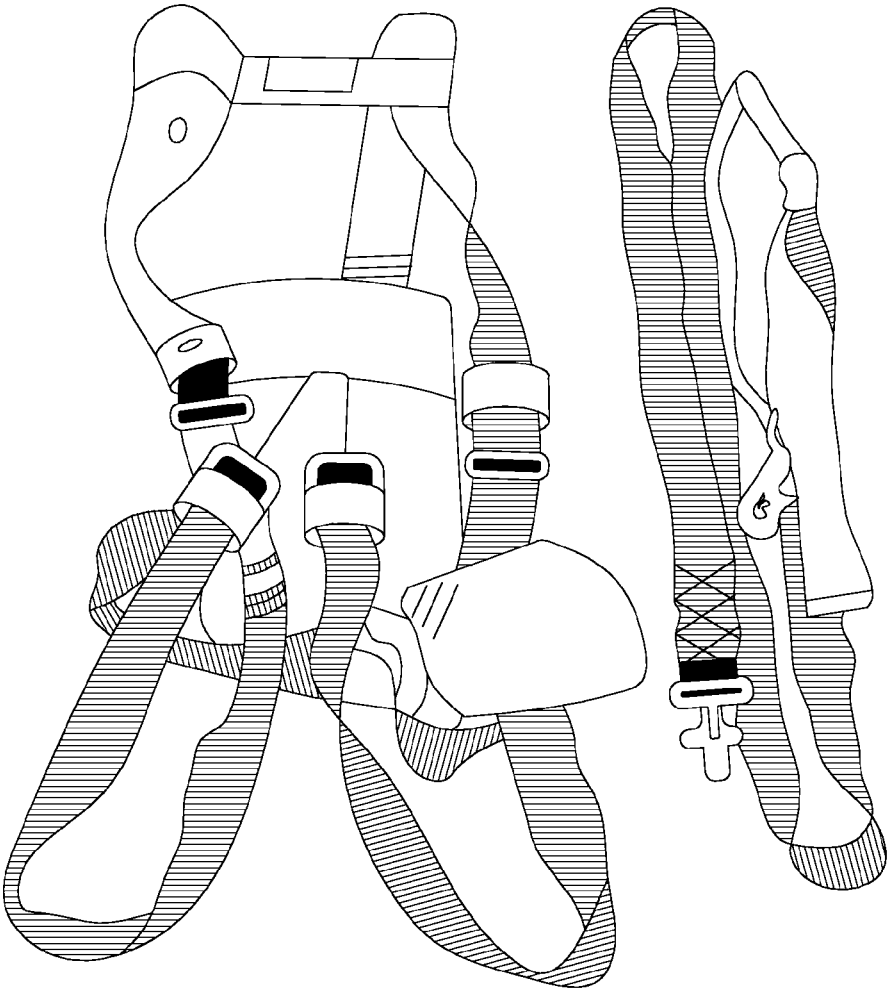

Figure 2-2. Safety Harness and Life Line

2.6 DEFECTS.

Belts, straps, harnesses, and life lines constructed of leather shall be inspected for the following defects, any one of which is cause for rejection of the piece of equipment being inspected.

a. Deep cuts and/or deep open scratches and cracks.

b. Damaged grain.

c. Loose or missing rivets or stitching.

d. Open grub holes.

e. Burnt leather.

f. Defects indicated in Paragraph 2.5h through 2.5n.

2.7 MARKING AND DISPOSITION.

Periodic inspection due dates will be affixed crossways on free ends of belts, harnesses, straps, etc., using black or white stencil ink, Federal Specification AA-208B or equal. Black ink shall be used except where equipment is dark resulting in poor legibility. A protective coating of clear lacquer, or lacquer acrylic, shall be applied over the date to protect it from wear. Dates shall be recorded in chronological order. This abbreviation "Insp" followed by the word "due" and the date will be marked to indicate the date next inspection is due. Example: INSP due JAN 2007. Each subsequent inspection due date will appear below preceding date.

NOTE

A tag stamped with the inspection due date as outlined in Paragraph 2.7 may be used in lieu of stenciling the required inspection information on the piece of equipment. When using a tag, it must be attached to the equipment with a lanyard. The tag/lanyard shall not impair operation of the item. Commands may use an AFTO Form 244, Industrial/Support Equipment Record; a locally developed form; or a computer generated program to document inspections.

2.7.1 Unserviceable Belts, Harnesses, and Straps. Belts, harnesses, straps, etc., found to be unserviceable as result of inspection will be tagged as condition condemned property. To prevent reuse, they shall be rendered useless by cutting across webbing or straps.

2.8 CLEANING.

Leather belts, harnesses, straps, etc., will be cleaned approximately every 3 months and dressed approximately every 6 months while in service use. If leather units that are initially issued are found to be hard and dry they shall be inspected for serviceability and dressed before use.

a. Wipe off all surface dirt with a sponge dampened (not wet) with water.

b. Rinse out sponge (or rag) in clear water and squeeze until practically dry. Then with aid of neutral soap (free from alkali) such as castile or white toilet strap work up a thick lather and thoroughly wash the entire article to remove embedded dirt and perspiration and then wipe with clean cloth to remove all moisture. Using a good grade of saddle soap repeat above for leather items and allow to dry at room temperature.

c. To apply dressing do not allow to dry. While leather is still damp, use for each article about one-quarter ounce (2 teaspoons) of neat's-foot oil and apply the oil gradually with a wool rag using light strokes to work it into the leather. After oiling, the article should be set aside in a dry, cool place for about 24 hours in order to permit the leather to dry slightly and then wipe with a soft cloth to remove excess oil.

NOTE

Oil applied to dry or dirty leather has a harmful affect on leather. Clean as outlined before oiling and use only neat's-foot oil.

d. Nylon articles may be cleaned by the same method as outlined for leather, only no dressing is required either with saddle soap or neat's-foot oil.

CHAPTER 3
RESTRAINT ASSEMBLIES, SAFETY NETS, ESCAPE ROPES, LANYARDS, AND LIFELINES

3.1 GENERAL.

Restraint assemblies, safety nets, escape ropes, lanyards, lifelines, and their components shall be used for their intended purpose only. The general requirements concerning storage data, daily use, shelf life, and inspection requirements are the same for these items as for belts, straps, and harnesses; they shall be periodically inspected every 6 months, and the inspection dates will be recorded on a tag affixed to the free end of each rope. (Restraint assemblies, shock absorbers, and safety nets are shown in Figures 3-1, 3-2, and 3-3). In addition, fiber ropes should be stored in areas where not subjected to mechanical or chemical damage, extreme temperature (below 20° F, above 180° F), excessive moisture (over 80% relative humidity) and excessive dryness (under 10% relative humidity).

CAUTION

Any lifeline, escape rope, or lanyard actually subjected to in service loading, exceeding that of the rated static load testing, shall be immediately removed from service and shall not be used again for personnel safe guarding.

NOTE

Escape ropes used on aircraft are excluded from the 6-month inspection and 5-year shelf-life. See applicable aircraft technical order for specific instructions.

3.2 ESCAPE ROPES, LANYARDS, AND LIFELINES.

NOTE

For those escape ropes which are locally fabricated, make sure date of manufacture is obtained from the bulk roll from which the subject rope is taken. This date will be attached as directed in paragraph 3.1 and will be considered the date of the initial periodic 6-months inspection.

3.2.1 Inspection. Escape ropes, lanyards, and lifelines shall be inspected every 6 months or any time their condition is considered questionable. Inspect rope assemblies for the following defects, any one of which is basis for rejection.

NOTE

Escape ropes used on aircraft are excluded from the 6-month inspection and 5-year shelf-life. See applicable aircraft technical order for specific instructions.

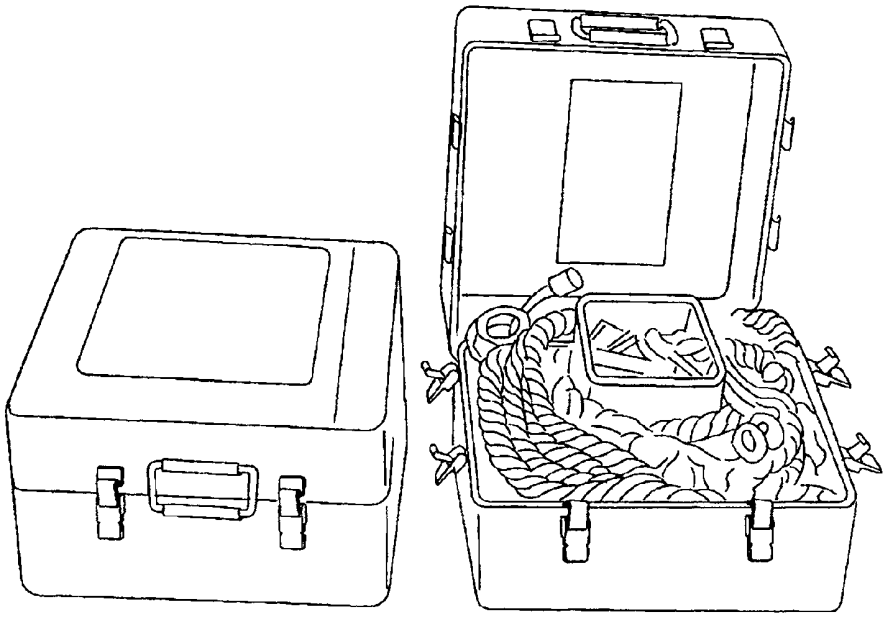

Figure 3-1. Restraint Kit Assembly

a. Any cut, chafe, or nicks.

b. Bulged strands.

c. Knots in individual strands.

d. End fittings not properly attached (served, spliced, wrapped, etc.).

e. Abnormal weakness detected visually.

f. Powdered fibers between strands.

g. Variation in size or roundness of strands.

h. Discoloration or rotting.

i. Broken, bent, or deformed fittings.

j. Surface corrosion on end fittings (reject only when pitted).

CAUTION

Fiber ropes shall not be used for support of humans around welding, burning, or other heat producing sources.

3.2.2 Ropes. Block assembly, single sheave used in missile silos contains many rope or polypropylene rope (NSN 4220-00-874-7921SX). Inspect the rope as outlined in paragraph 3.2.1. Inspect the sheave for pulley movement, deformity, cracks, missing components, and surface corrosion. (Reject if pitted.)

3.3 SAFETY NETS.

The general requirements, types of inspection, storage data, and shelf life for safety nets are the same as for belts, straps, and harnesses. Since most all safety nets are constructed of ropes, cords, webbing, snaps, etc., inspection procedures and defects for rejection are basically the same. Therefore, all types of safety nets (as found in FSC 4240) shall be inspected as indicated. Inspect the net and shock mechanism for the following defects any one of which is basis for rejection.

a. Damaged or parted ropes or webs.

b. Parted segments.

c. Snaps and D rings for physical damage (broken, cracked, deformed, or keeper latch missing).

d. Surface corrosion (reject only when pitted).

e. By touch and visually inspect all butyle rubber for swelling, discoloration, lamination separation, tears, cracking, or any other abnormalities.

f. Straps and ropes as previously outlined.

3.4 RESTRAINT ASSEMBLIES.

Restraint assemblies outlined herein pertain to those assemblies used by ground personnel working on horizontal stabilizers, wings, fuselage, and empennage of C-133, C-141, C-17 and C-5 aircraft. The storage data, shelf life, types of inspection, and general requirements for these items are the same as for belts, straps, ropes, and harnesses. Shock absorbers utilized with this type of equipment are covered separately in subsequent paragraphs. Restraint assemblies described herein shall be periodically inspected every 6 months. Except where indicated any one defect is basis for rejection. Inspect for following:

a. Abnormal deflection of rope assembly. (Also see rope inspections.)

b. Parted segments of rope assembly.

c. Broken, cut, or chafed ropes.

d. Mildew, fungus, or mold on rope assembly.

e. Deformed, cracked, or permanent set in the anchoring eyes.

f. Surface corrosion (reject only when deeply pitted).

g. Inspect harnesses per procedures for belts, straps, and harnesses.

h. Bolt assemblies for deformity, cracks, or permanent set.

i. For C-5 restraint assembly also see TO 13A1-5-1.

3.5 SHOCK ABSORBERS.

Generally the storage and general requirements for shock absorbers are the same as those outlined for belts, straps, and harnesses. Personnel utilizing these absorbers will note any unusual signs of wear during inspections prior to and after use. When signs of wear are evident or at a minimum of every 2 years, shock absorbers shall be inspected for defects as outlined for snaps, D rings, nylon, belts, straps, and harnesses. In addition, they shall be inspected for separation of nylon filaments from straps. Separation is basis for rejection. Shock absorbers do not lend themselves to non-destructive tests. Energy is absorbed by the breaking of nylon filaments which bind the nylon strap and any pull test would render them unserviceable. If they are properly stored and visually inspected every 6 months, they can be considered safe for day-to-day use. Minor holes, cuts, tears, or loose stitchings in the protective covering of the shock absorber are not causes for rejection provided the nylon strap and its filament are not affected. Such defects should be covered with tape to prevent contamination of nylon filaments.

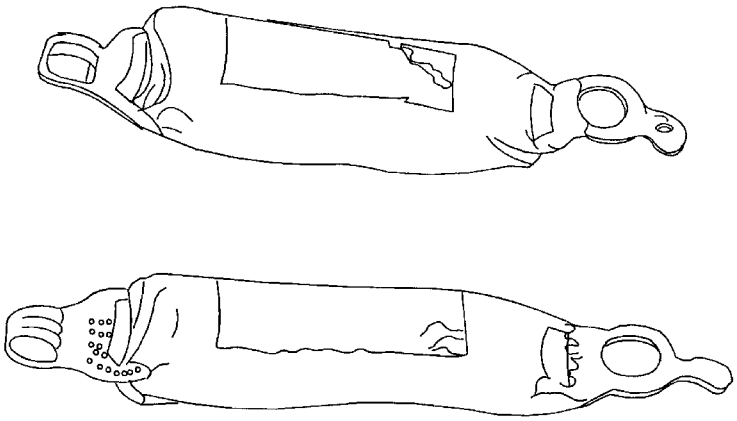

Figure 3-2. Shock Absorbers

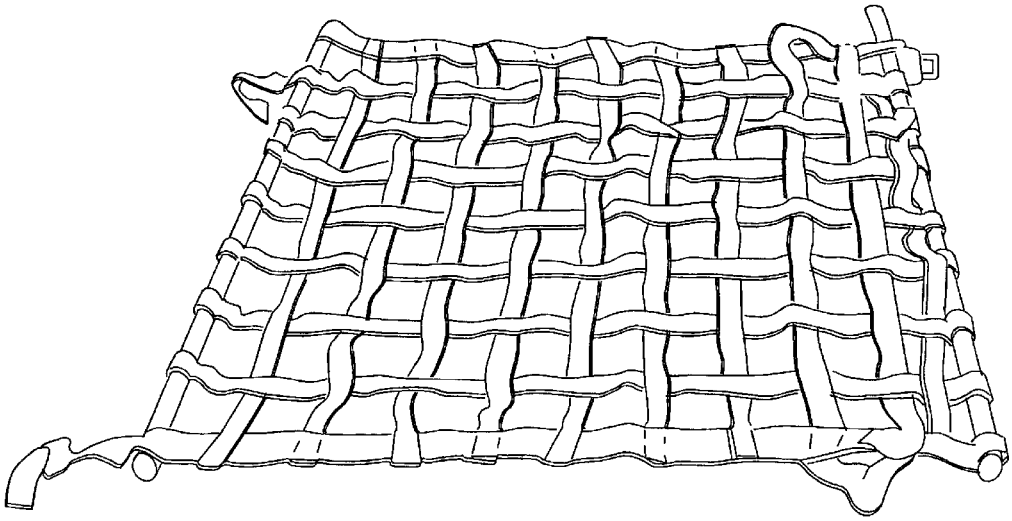

Figure 3-3. Safety Net

CHAPTER 4
RESCUE SEATS AND BASKETS

4.1 GENERAL.

When this equipment is used in salt water it shall be flushed as soon as possible after use with fresh water and all parts thoroughly dried. The MA-1 basket described herein is highly susceptible to corrosion and particular care should be given to this item after use in salt water. Personnel responsible for this equipment shall frequently visually inspect these assemblies for signs of wear and corrosion during use. When these signs are in evidence, rescue seats and baskets outlined shall be given nondestructive tests before further use as outlined herein. They shall also be given periodic tests as indicated for each item cited. There is no service life for items contained in this chapter. Condition only is basis for condemnation.

4.2 STORAGE REQUIREMENTS.

Rescue seats and baskets shall be stored in their shipping containers in a cool dry place until placed in service. While in a day-to-day use they shall be stored or stowed in such a manner so that they will not be subjected to the elements.

4.3 SHELF LIFE.

When rescue seats and baskets described herein have been properly stored, maintained, and pass the nondestructive tests, outlined, they can be considered safe for day-to-day to use for an indefinite period of time. If at any time there is any doubt of serviceability they shall be replaced.

4.4 TESTING MA-1 RESCUE BASKET. (NSN 4240-01-250-0313, Figure 4-1).

NOTE

Organizations using Rescue Basket No. 490 shall perform maintenance, inspection, and testing in accordance with manufacturers recommendations. POC is Lifesaving Systems Corporation, phone (813) 645-2748.

To test the MA-1 basket suspend a load of 600 pounds in the basket for a minimum of 10 seconds. The method is optional provided unit is suspended from attachment point of basket. Remove load and then remove flotation bags from each side of basket, inflate firmly and submerge in water for 3 minutes. Inspect basket for following defects.

a. Change in physical structure, i.e., broken, bent, deformed, or fractured parts. Reject if found.

b. Corrosion (reject only if deeply pitted). Aluminum may be treated as outlined in TO 12S6-3-1, in Paragraph 11.

c. Flotation bag leakage. Small holes can be patched. Bags with excessive leakage shall be replaced.

The above test and inspection shall be accomplished on all MA-1 rescue basket in service use every 3 months.

4.5 TESTING RESCUE SEAT FOREST PENETRATOR. (NSN 4240-00-199-7353BU and NSN 4240-01-500-8115, Figure 4-2).

The rescue seat shall be subjected to the following nondestructive test every 12 months while in service use.

4.5.1 Strength. The Forest Penetrator Rescue seat shall be mounted to simulate rescue operation, using a helicopter rescue hoist hook attached to hoist rung of seat. A static load of 1800 pounds distributed equally on each seat (600 pounds on each seat) shall be applied for a minimum of 10 seconds. The method of applying the static load is optional.

4.5.2 Safety Straps. Remove the straps from the cover and unsnap the snap end of each strap from the attachment bolt. Inspect straps and components for defects as outlined in Chapter 2. Clean as outlined.

4.5.3 Floatability. Install the flotation collar on the seat and place in fresh water deep enough to support the seat. The seat shall float.

4.6 INSPECTION.

Inspect the seat after performing above test for following defects:

a. Damaged parts (broken, bent, deformed, or fractured). Bent seats, broken springs, bent bolts, etc., can be replaced with new parts. If main body of assembly is damaged, condemn complete assembly without replacement of parts.

b. Missing parts. If unit passes tests, replace missing parts where possible. (Consult TO 14S6-3-1).

c. Flotation Collar. If flotation collar fails to float unit it shall be condemned and new unit installed.

d. Seats and hooks for freedom of movement to all positions, and proper latching and unlatching. If unable to correct with replacement parts condemn assembly.

e. Corrosion. If corrosion is detected, treat according to TO 1-1-691.

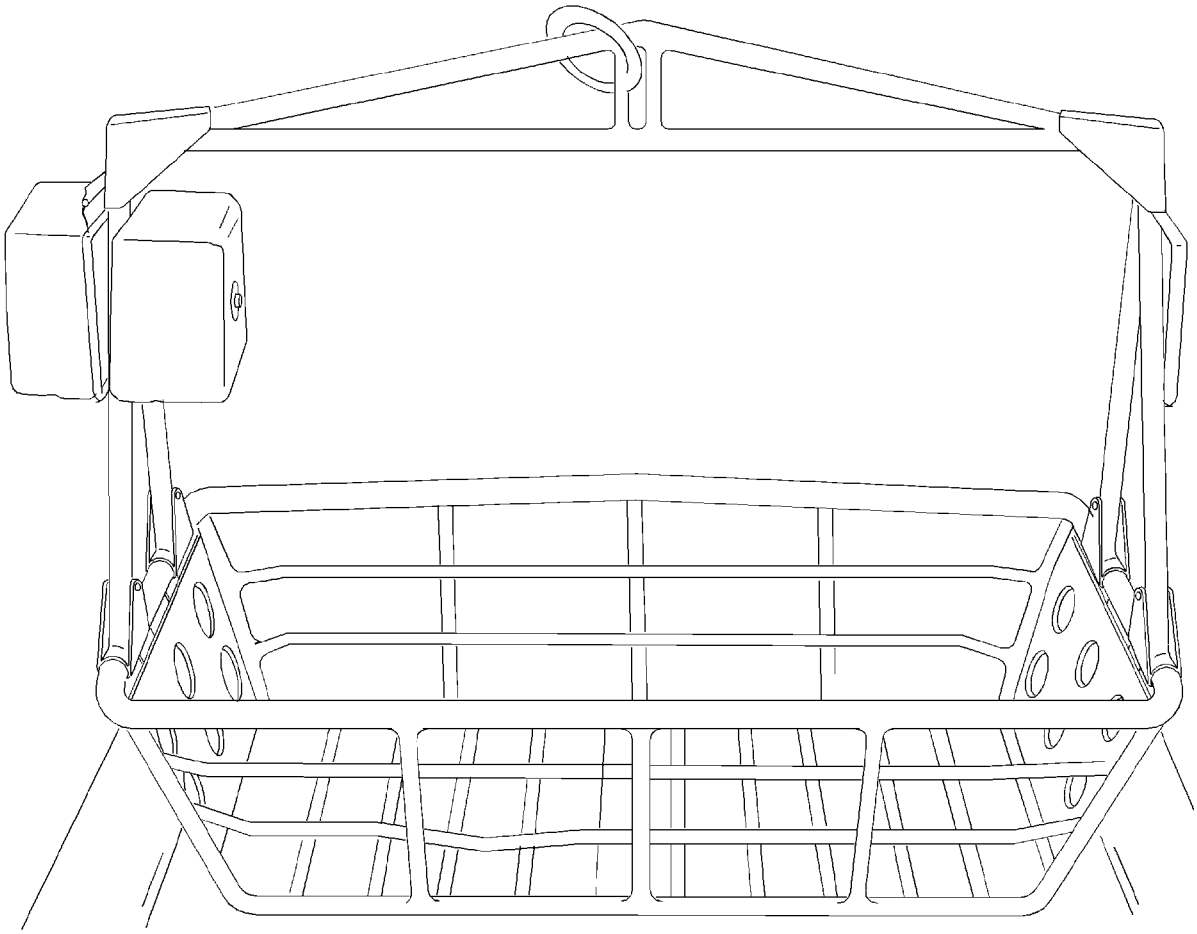

Figure 4-1. MA-1 Rescue Basket

4.7 TESTING BOYD HELICOPTER RESCUE SEATS. (FSN 4240-01-453-0241, Figure 4-3).

The rescue seat shall be subjected to the following non-destructive test every 12 months.

4.7.1 Strength. The Boyd rescue seat shall be mounted to simulate rescue operation, using a helicopter rescue hook inserted through the hoist ring of the seat. The helicopter seat shall support a 600 pound load for a period of ten seconds. The load may be applied by means of hydraulic or pneumatic presses, jacks, shot bags, or equivalent high density material on the seats. The load shall be equally distributed to the three blades.

4.7.2 Leakage and Floatability. The seat shall be placed in fresh water at room temperature and shall float. It shall then be completely submerged for a period of 15 minutes. There shall be no leakage of water into the flotation chamber and tube.

4.7.3 Inspection. After performing above tests inspect the Boyd seat for the following defects:

a. Damaged parts (broken, bent, deformed or fractured). Condemn if any one condition is noted.

b. Missing parts such as snap hooks, rings keepers, etc. Replace if practical, otherwise condemn.

c. Leakage in flotation chamber which is evidenced by water trapped in chamber. Condemn if leaks found; also condemn if seat does not float during float test.

d. Corrosion. Surface corrosion can be treated in accordance with TO 14S6-3-1. If deeply pitted, condemn.

e. Inspect straps per procedures outlined for belts, straps, and harnesses.

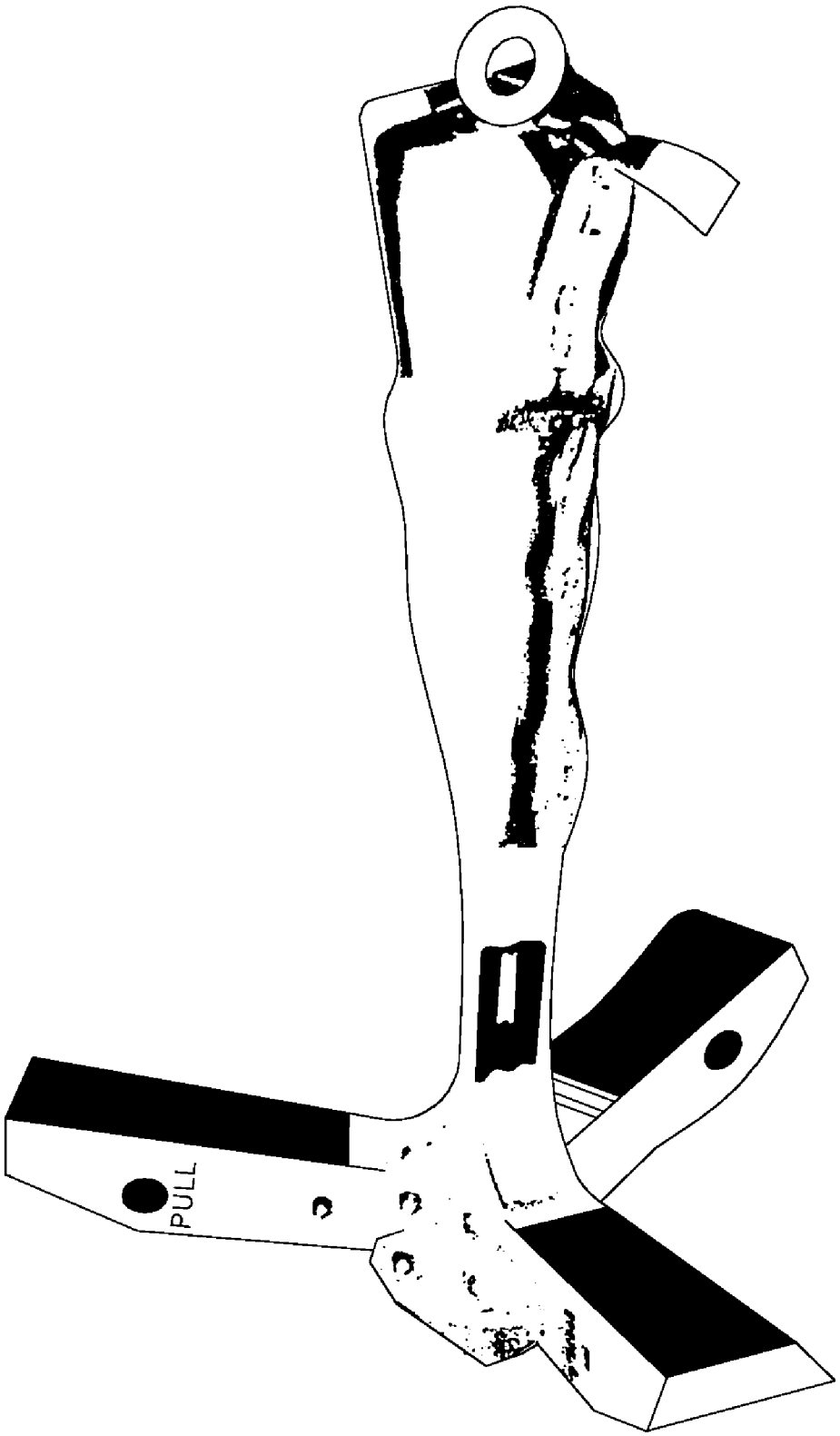

Figure 4-2. Forest Penetrator Rescue Seat

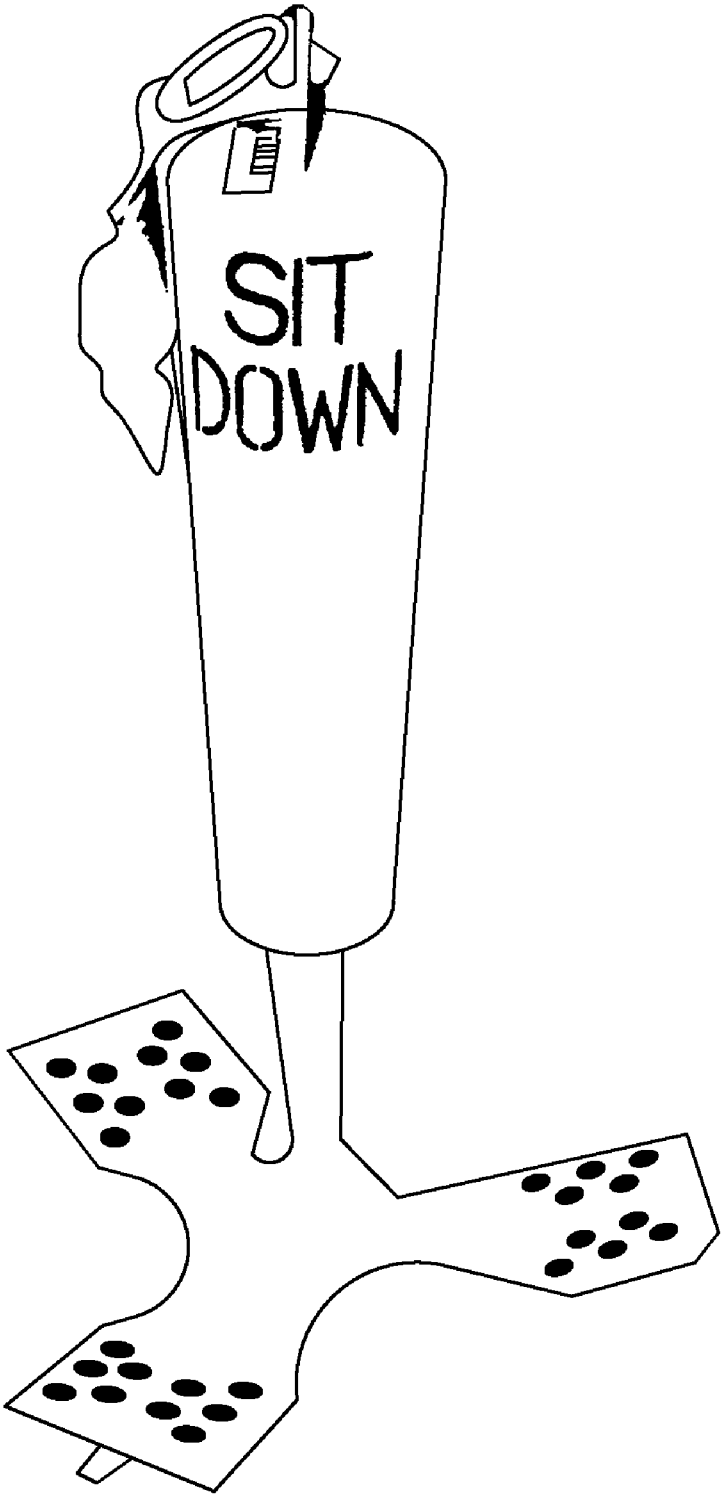

Figure 4-3. Boyd Rescue Seat

CHAPTER 5
SEARCH AND RESCUE (SAR) EQUIPMENT

5.1 GENERAL.

The nature of the search and rescue mission requires that helicopter units having SAR responsibilities be equipped to carry out those responsibilities. Selection of the specific rescue equipment will generally have been made prior to the rescue. This chapter addresses the description, maintenance and inspection of these equipments. AFTTP 3-3 series addresses information on the procedures and methods of equipment utilization. Manufacturers reserve the right to change their part numbers. Always check their web sites for the most current information. Each individual Piece of rescue equipment requires a locally generated equipment log. The equipment log as a minimum will provide tracking for the equipments serial number or locally assigned equipment number, types of inspections required, when inspections are due, when inspections are performed, maintenance performed and equipment disposition.

SECTION I RESCUE LITTER ASSEMBLY (STOKES LITTER)

5.2 DESCRIPTION.

The Rescue Litter (also referred to as STOKES Litter) is designed to accommodate one survivor, may be used over land or water and can be hoisted into the helicopter. When fitted with a back board, it is used to immobilize a survivor who has back injuries. The following approved litters are supplied by Life Saving Systems. Refer to the web site for most recent part numbers: www.lifesavingsystems.com.

402 Medevac one piece, confined area.
404 Medevac II one piece.
406 Medevac IIA break down model.
406TI Medevac IIA TI Titanium break down.

5.3 CONFIGURATION.

WARNING

If the survivor is wearing a buoyant anti-exposure suit, it will affect the flotation characteristics of the litter and may negate the self-righting feature.

The Rescue Litter Assembly consists of the rescue litter the sling assembly and when used over water, the flotation kit (Section II). To save space, and for better stowage of the litter, the flotation logs and sling attached with the kit may be removed and stowed in a separate carrying bag which comes with the kit. AFTTP 3-3 series addresses usage procedures and litter assembly rigging. Units may modify the flotation placement to accommodate special missions (e.g. NASA recoveries).

5.4 MAINTENANCE.

Maintenance operations shall be performed by Organizational Level or above. All maintenance actions and inspections shall be recorded on an AFTO 244 form and equipment. Maintenance of the Rescue Litter Assembly is limited to inspection and minor repair or replacement prior to placing in service.

5.5 SPECIAL INSPECTION.

The Rescue Litter Assembly shall be inspected prior to placing in service, after salt water immersion, prior to doing live operations and every 180 days thereafter. To perform a Special Inspection of the Stokes Litter, proceed as follows:

NOTE

- A 5000 pound locking carabiner will be used to attach the stokes sling assembly to the hoist hook.
- If any of the following conditions are noted, repair or replace prior to placing in service.

a. Inspect Stokes Litter for general condition.

b. Inspect all metal for cracks, indents, corrosion and security of attachment.

c. Inspect all welds for cracks and security of attachment.

d. Inspect snow skids for general condition (if applicable).

e. Inspect suspension bed webbing for cuts, tears, stains, fraying and security of attachment.

f. Inspect quick release fittings for ease of operation, sharp edges and corrosion.

g. Inspect all straps for cuts, tears, stains, fraying and security of attachment.

h. Inspect Lift Rings for deformity or cracks.

i. Inspect all stitching for fraying and security of attachment.

j. Inspect all webbing for cuts, tears, fraying and grease contamination.

k. Inspect carabiners for proper gate alignment, ease of operation, cracks and corrosion.

l. Inspect carabiner gate pin hinge for deformity and security of attachment.

m. Inspect for reflective tape on rescue litter and carabiners.

(1) Red reflective tape (2 places, 1-1/2 x 1/2-inch) at upper attachment points (As required).

(2) White reflective tape (2 places, 1-1/2 x 1/2-inch NIIN 01-078-8660) at lower attachment points (As required).

SECTION II RESCUE LITTER FLOTATION ASSEMBLY (REU-2/N)

5.6 DESCRIPTION.

The Rescue Litter Flotation Assembly is designed to provide aircraft compatible flotation for the Stokes Rescue Litters used in water rescues. This assembly provides a standard means for flotation while medically evacuating (MEDEVAC) injured litter patients via helicopters. Refer to their Life Saving Systems web site for most recent part numbers: www.lifesavingsystems.com.

5.7 CONFIGURATION.

The Flotation Assembly is light weight, easily stowed and readily attached and detached. The Flotation Assembly consists of the following components:

2 - Flotation Log Foam
2 - Flotation Log Covers
4 - Retainer Straps
5 - Patient Restraint Straps
1 - Chest Pad Foam
1 - Chest Pad Cover
1 - Lift Insert
1 - Ballast Bar
1 - Stowage Bag

5.8 APPLICATION.

The Flotation Assembly may be removed from the litter and stowed in a separate carrying bag which comes with the assembly. The AFTTP 3-3 Series addresses procedures for employment. Units may modify the flotation placement to accommodate special missions (e.g. NASA recoveries).

5.9 MAINTENANCE.

Maintenance operations shall be performed by Organizational Level or above. All maintenance actions or inspections shall be recorded on appropriate form. Maintenance of the Flotation Assembly is limited to inspection and minor repair or replacement prior to placing in service.

5.9.1 Special Inspection. The Flotation Assembly shall be inspected prior to placing in service, prior to live operations, after salt-water immersion and every 180 days thereafter. To perform a Special Inspection of the Flotation Assembly, proceed to check the following:

NOTE

If any of the following conditions are noted, repair or replace prior to placing in service.

a. Fresh water rinse (and no alkaline soap) after every salt-water immersion. (Ensure it is completely air dried)

b. Inspect entire Flotation Assembly for general condition and cleanliness.

c. Inspect log/chest pad covers and stowage bag for cuts, tears and fraying.

(1) Inspect stitching for fraying and security of slide fasteners attachment stitching.

(2) Inspect for presence of oil, fuel, grease or chemical contamination.

d. Inspect nylon mesh material of the lift insert for cuts, tears and fraying.

(1) Inspect for loose stitching and security of attachment of seam binding, snap closures and straps/ handles.

(2) Inspect for presence of oil, fuel, grease or chemical contamination.

e. Inspect slide fasteners and track for alignment, ease of operation and general condition.

5.10 FLOAT TEST.

a. Perform a Float Test on assembly every 365 days.

b. Assemble Flotation Assembly on the Stokes Rescue Litter.

c. Allow the assembled litter to remain in a fresh water tank overnight or a minimum of twelve hours.

d. If apparatus remains afloat, with head of litter out of water, and flotation logs visible above the water, hang assembly to dry and return to service use.

e. If apparatus does not remain afloat as specified, and becomes water logged, remove from service use and discard.

f. Make necessary entries on appropriate form and equipment.

SECTION III HOISTING SLING ASSEMBLY

5.11 DESCRIPTION.

The Hoisting Sling Assembly is designed for quick attachment to/detachment from the Stokes Rescue Litter. Refer to Life Saving Systems web site for most recent part numbers: www.lifesavingsystems.com.

5.12 CONFIGURATION.

The Hoisting Sling Assembly is constructed of two sets of stainless steel 5/32-inch cables. Each cable set contains two lengths of cable (33 inches and 41 inches), which are attached to one another by a 1-1/2-inch by 5/16-inch stainless steel lift ring. Each cable set has a pair of thimbles, two swaging sleeves, and two color coded locking carabiners (Figure 5-1). The 33-inch cable is attached to the head of the litter by the red color coded carabiner, and the 41-inch cable is attached to the foot of the litter by the white color coded carabiner.

5.13 MAINTENANCE.

Maintenance operations shall be performed by Organizational Level or above. All maintenance actions or inspections shall be recorded on appropriate form. Maintenance of the Hoisting Sling is limited to Visual Inspection, rinsing with fresh water, replacement of the color coded reflective tape, or replacement o£ sling prior to placing in service.

NOTE

Hoisting Sling Assembly is coded as a consumable; however, replacement of the white or red reflective tape is authorized. Limited maintenance shall be performed in accordance with special inspection procedures.

5.13.1 Special Inspection. The Hoisting Sling Assembly shall be inspected every 180 days, prior to live operations and after salt water immersion. To perform a Special Inspection, proceed as follows:

NOTE

If any of the following conditions are noted, repair or replace as authorized prior to placing in service.

a. Inspect for general condition.

b. Inspect total assembly for general cleanliness.

c. Inspect cable sets for defects such as kinks and/ or broken wire strands.

d. Inspect for corrosion between cable strands.

e. Inspect locking carabiners for ease of operation.

f. Inspect swagging sleeves for one crimp, identified by 1/2-inch wide compression on sleeves.

g. Inspect swagging sleeves for corrosion on side and in ends.

h. Inspect lifting ring for security, wear, obvious damage, and deformity.

i. Inspect carabiners for condition and proper application of respective color coded reflective tape.

(1) The red reflective tape (NIIN 00-949-7552) is applied to the carabiner attached to the 33-inch cable, which is attached to the head of the litter.

(2) The white reflector tape (NIIN 01-078-8660) is applied to the carabiner attached to the 41-inch cable, which is attached to the foot of the litter.

j. Lubricate hoisting sling cables and all moving parts using an AF HAZMAT approved lubricant. (e.g. Life Saving Systems recommends WD-40).

5.14 PROOF LOAD TEST (WORKING LOAD TEST).

Perform a Proof Load Test on the Hoisting Sling Assembly prior to placing in service and every 180 days thereafter as follows:

a. Place a 600 lb. load evenly distributed in the litter for 15 minutes.

NOTE

Sand bags or similar weights may be used. (We suggest that this be accomplished by a qualified load test facility, that has the appropriate scaling and stress tools if possible).

b. Assemble Hoisting Sling Assembly on the Stokes Rescue Litter by attaching the four locking carabiners to the litter in the appropriate positions for hoisting.

c. Hoist the litter (while loaded) a few inches off the floor for a minimum of 30 minutes.

d. Lower litter and remove weight. Thoroughly inspect litter and hoisting slings for signs of damage. Replace components as necessary.

e. Make necessary entries on appropriate form and equipment.

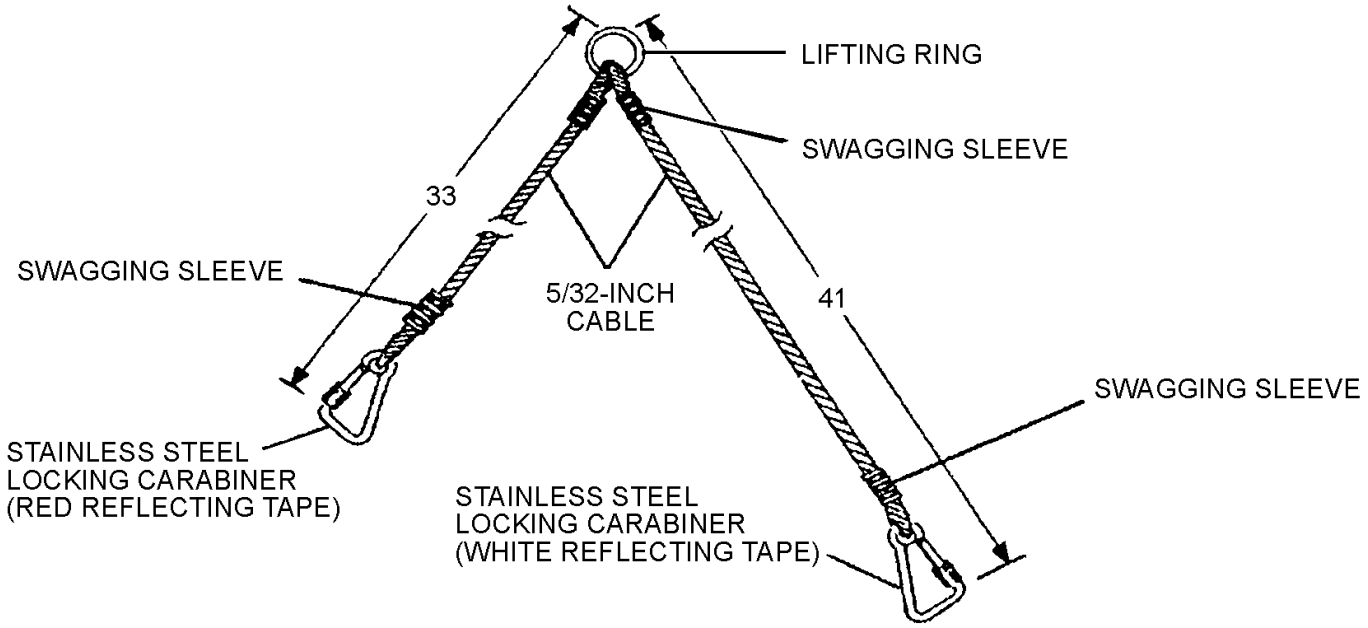

Figure 5-1. Hoisting Sling Assembly (One Set)

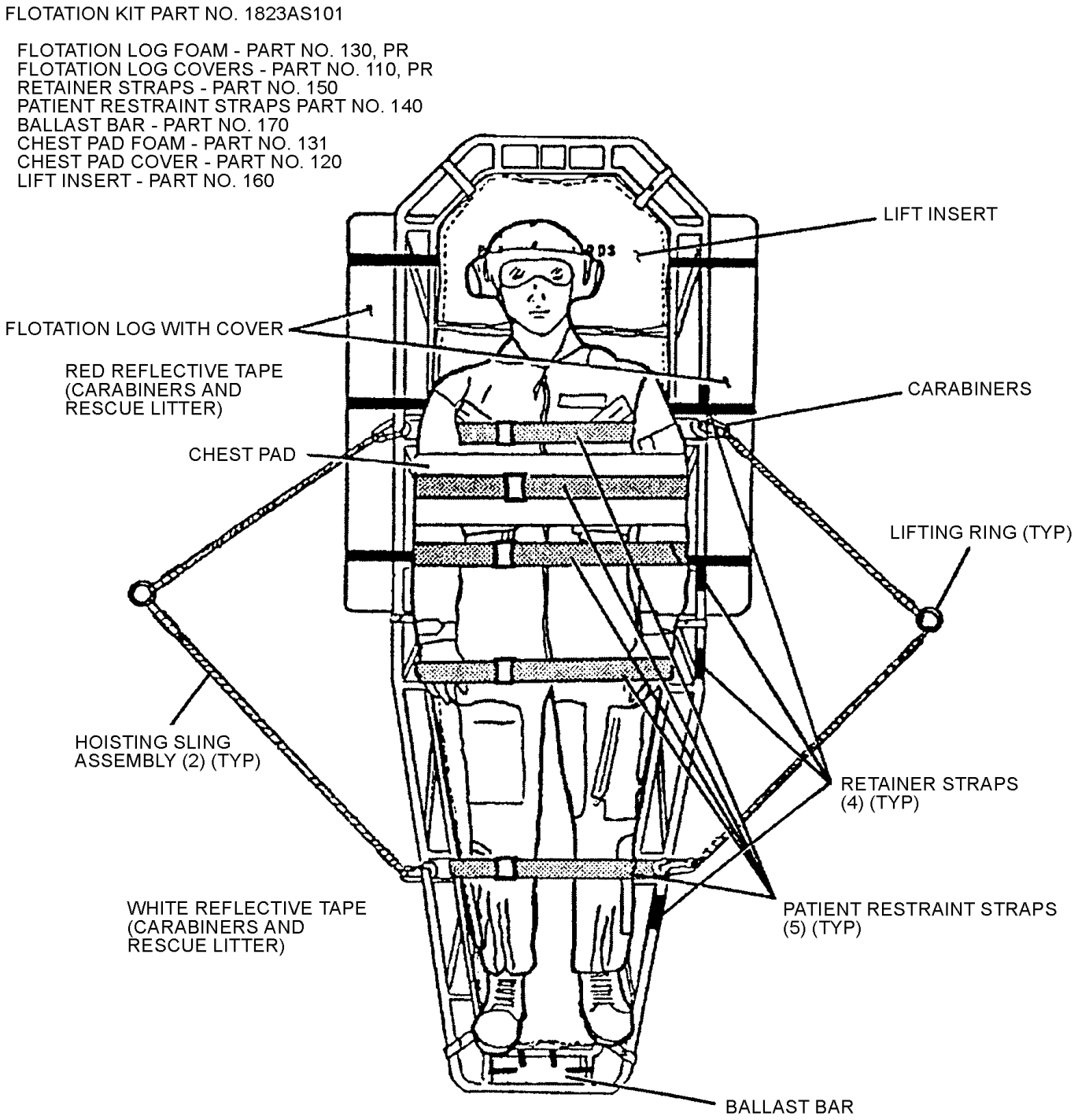

Figure 5-2. Rescue Litter Assembly

SECTION IV RESCUE STROP AND CABLE WEIGHT COVER

5.15 GENERAL.

The Strop (also known as the Horse-Collar Quick Strop and Rescue Strop) is used to assist personnel performing personnel recovery from a helicopter over water or land. The strop accommodates one survivor at a time. AFTTP 3-3 series addresses information on the procedures and methods of equipment utilization. Refer to Life Saving Systems web site for most recent part numbers: www.lifesavingsystems.com.

5.16 CONFIGURATION.

The Rescue Strop is a buoyant device made of a closed-cell foam filling encased in an international orange cover for high visibility during rescue operations. Webbing weaved through the cover with both ends terminating in two V-rings, is used to attach the strop to the helicopter rescue hook. A 5000 lb. locking carabiner may be used to facilitate the connection to the hoist hook. Two retainer straps, one with a gated snap hook and one with an adjustable curved V-ring are fastened to the strop with the hardware ends secured with webbing keepers (Figures 5-3, 5-4, and 5-5). The Cable Weight Cover is a bright yellow, waterproof, buoyant cover encasing a foam rubber filling. The cover has four snap fasteners and a tie cord that keep the cover secure around the cable weight (Figure 5-6).

5.17 APPLICATION.

The Rescue Strop and Cable Weight Cover are intended for use by personnel performing helicopter personnel recovery operations when it is impossible for the helicopter to make a landing on land or water. The strop can be used to lower a rescuer, as well as to raise a survivor to the helicopter. The strop is intended for the rescue of conscious survivors. Use of the Rescue Strop to rescue unconscious survivors is authorized only in an emergency situation when MEDEVAC Litter is not available and the Rescue Strop has been modified to prevent accidental patient release.

5.18 FUNCTION.

WARNING

Failure to properly use the retaining straps on the Rescue Strop may allow the survivor to slip and fall from the strop.

The Rescue Strop is lowered on a hoist cable from a helicopter to the survivor to facilitate rescue procedures. The Cable Weight Cover protects the survivor from serious injury if the survivor is accidentally hit with the cable weight. Sling Rescue Strop from hoist with retaining straps on the outside. Strop is positioned around survivor's chest with survivor facing hoist and arms on top to either side. Pass straps over the top of the survivor's arms, then route straps from arms down and under strop and connect the two strap ends across survivor's chest. Tighten adjustable strap tension to hold survivor's arms firmly.

SECTION V MODIFICATION

5.19 GENERAL.

The Rescue Strop shall be updated by comparing configuration of the assembly to modifications listed in Table 5-1.

Table 5-1. Rescue Strop Directives

Description of Modification	Application	Modification Code
Modification of arm retainer straps and assist handle	All LSC Rescue Strops part No. 216	ACC-605-TDD66

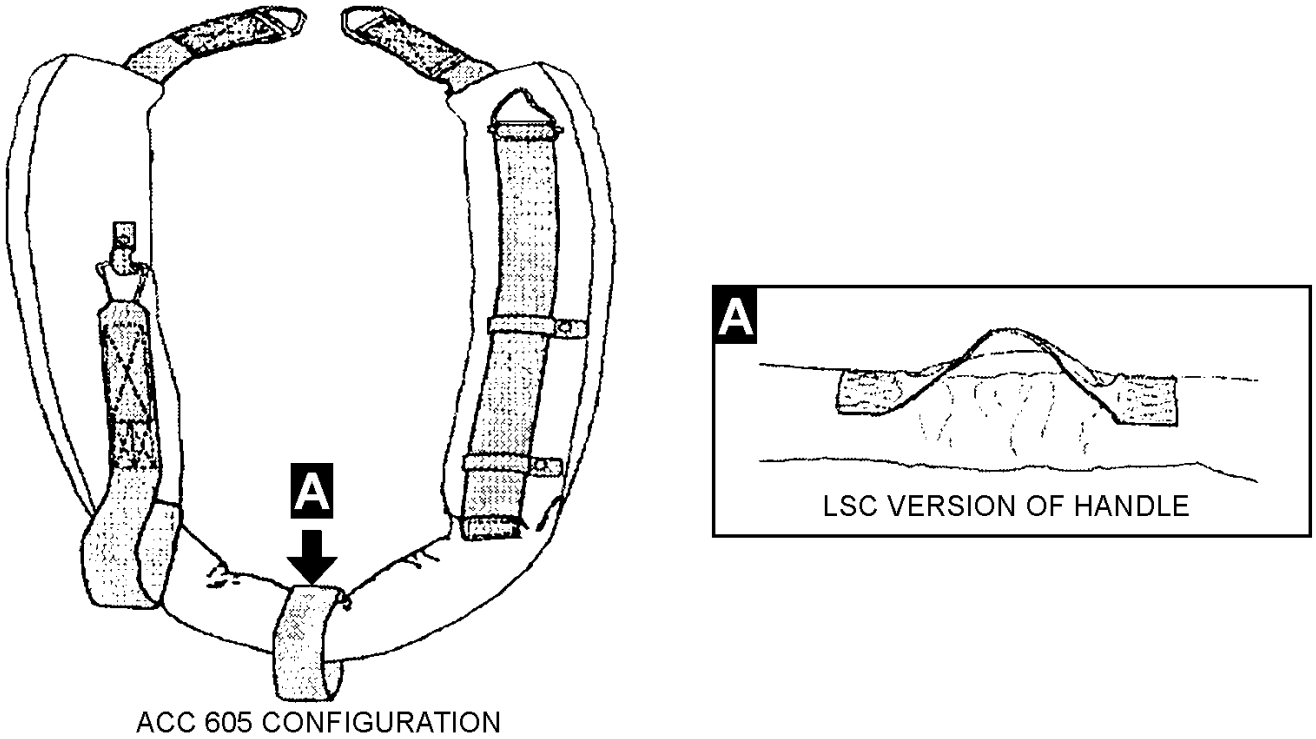

Figure 5-3. Rescue Strop

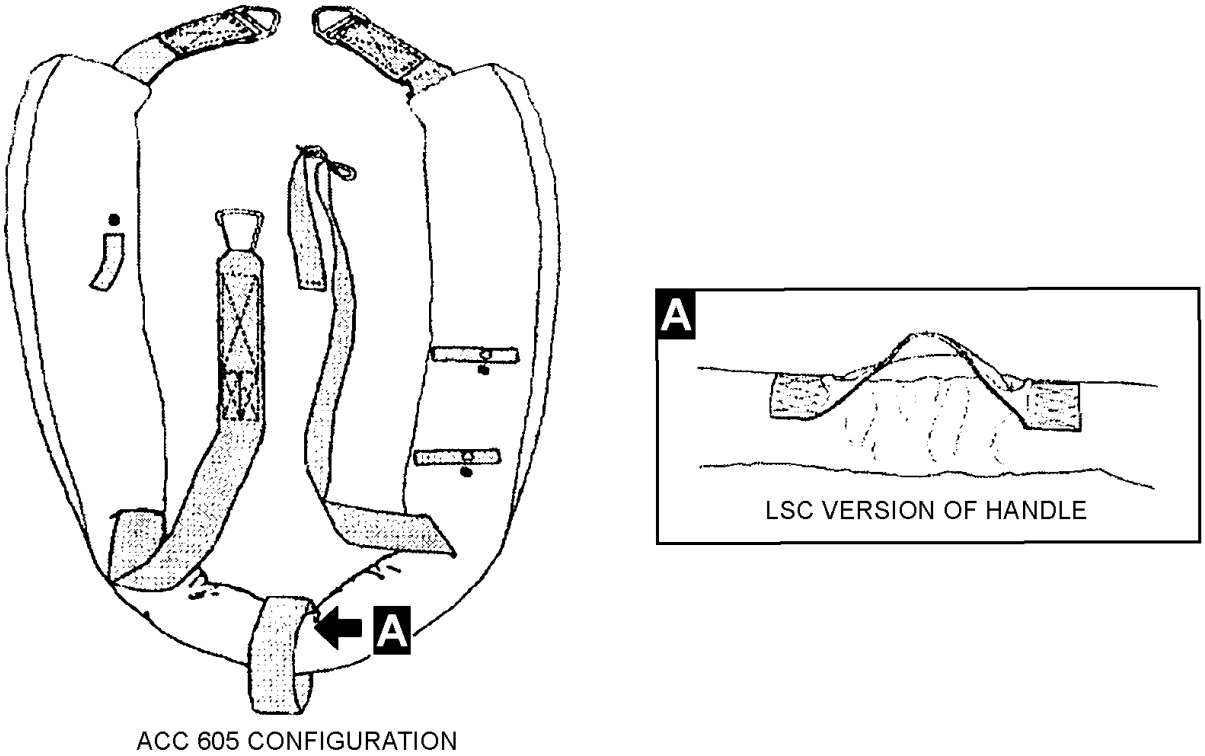

Figure 5-4. Rescue Strops Retainer Straps Pulled Out

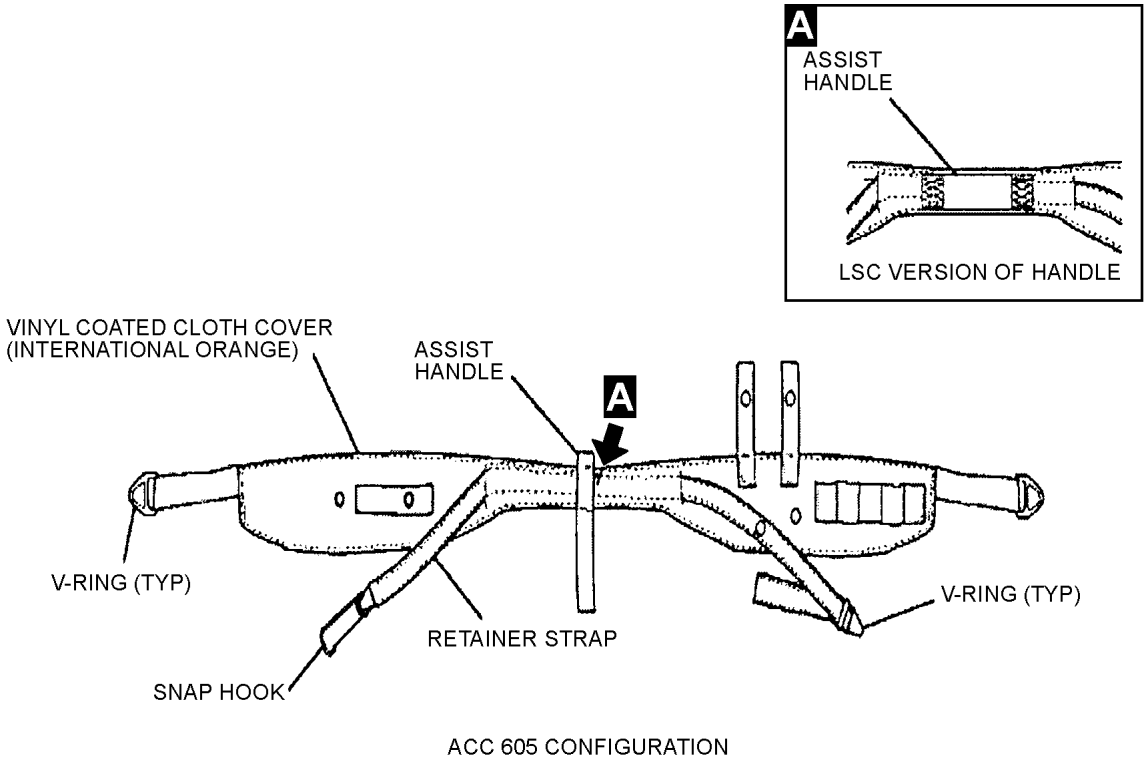

Figure 5-5. Rescue Strop, Parts Nomenclature

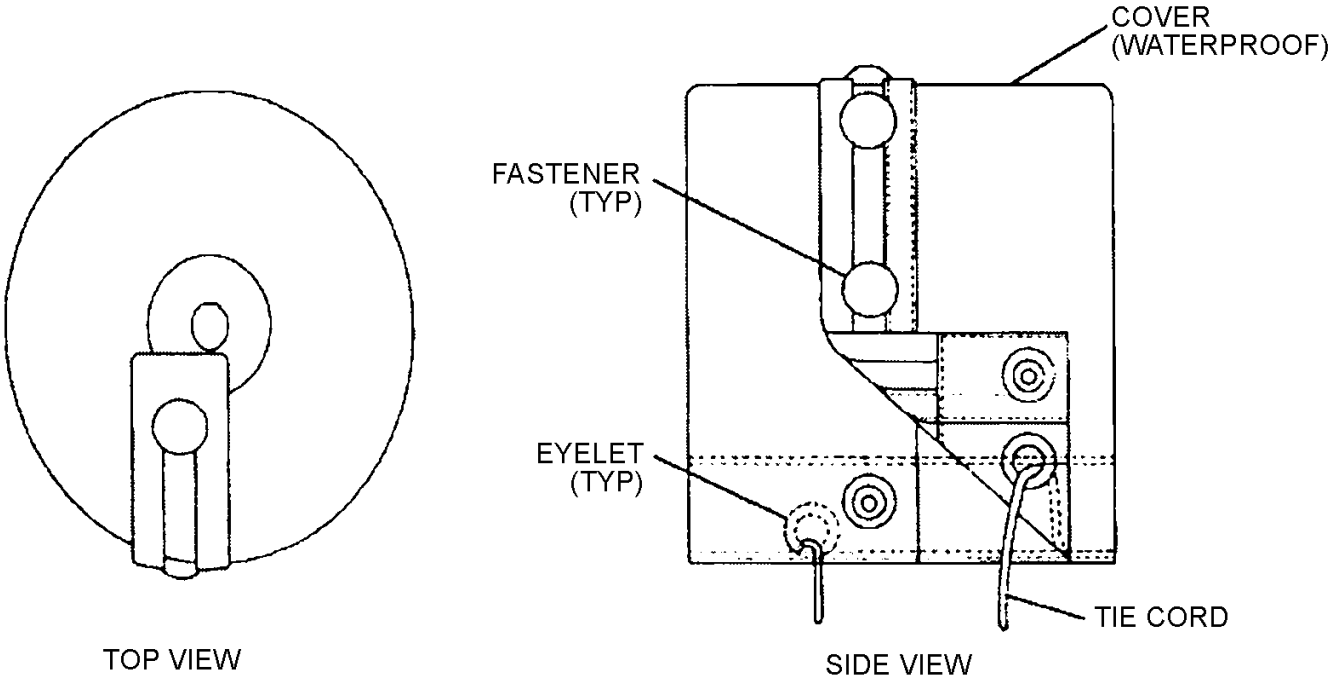

Figure 5-6. Cable Weight Cover Parts Nomenclature

SECTION VI MAINTENANCE OF THE RESCUE STROP AND CABLE WEIGHT COVER

5.20 GENERAL.

Cleaning of the Rescue Strop and Cable Weight Cover shall be the responsibility of Organizational Level. Repairs or other maintenance actions required shall be performed by Organizational Level or above. Maintenance is limited to inspection and minor stitching repair.

5.21 INSPECTION.

All Rescue Strops and Cable Weight Covers shall be subjected to a Calendar Inspection.

5.22 CALENDAR INSPECTION.

The Calendar Inspection consists of a Visual Inspection, a Markings Inspection, and a Proof Load Test. Calendar Inspection shall be performed at issue and at intervals not to exceed 180 days. The unit will be removed from service 10 years from initial use.

5.23 VISUAL INSPECTION.

To visually inspect the condition of the Rescue Strop and Cable Weight Cover, proceed as follows:

a. Inspect fabric for cuts, deterioration, and abrasion.

b. Inspect seams for proper adhesion and stitching.

c. Inspect retainer straps for security of attachment and wear.

d. Inspect all hardware for security of attachment, corrosion, damage, wear, and if applicable, ease of operation. As long as the system integrity is not compromised, adding informational/inspection tags is allowed.

5.23.1 Marking Inspection. Compare markings on strop and cover to markings listed in Tables 5-2 and 5-3 as applicable. Restore faded markings. Correct any markings which do not agree with the applicable table. To change markings, proceed as follows:

Materials Required

Quantity	Description	Reference Number
As Required	Ink, Indelible, Laundry, Black	SPE-92 NIIN 00-161-4229

a. If marking is faded, restore marking.

b. If marking is incorrect, paint out incorrect marking and enter correct marking as close to proper location as possible using black ink.

5.23.2 Proof Load Test. The Proof Load Test is performed on Rescue Strops during Calendar Inspection and after each flight during which salt water immersion has occurred. To perform a Proof Load Test, proceed as follows:

a. Allow strop to dry completely.

b. Perform the Visual Inspection in accordance with paragraph 5.23.

NOTE

If Webbing Testing Machine is not available, proceed to step h and perform subsequent steps.

c. Place Rescue Strop in a Webbing Testing Machine.

d. Apply a load of 500 pounds at a rate of one inch per minute on commercial Webbing Testing Machine.

Table 5-2. Rescue Strop Markings

Marking	Location	Letter Height
STROP - MODIFIED RESCUE NOMENCLATURE - REU-3/P STOCK NO. [1680-01-347-4946] PART NO. [216-1] CONTRACT NO. [stencil applicable number] MANUFACTURER [stencil name of manufacturer] MFD DATE [stencil month and year of manufacture] [field number]	Outboard side	1/2 Inch
Notes: 1 All markings shall be stamped or stencilled with wash-proof black ink. All words enclosed by brackets, in the column headed MARKING, shall not be stencilled on the equipment; they are to be regarded as instructions only. 2 General NATO donning instructions are stenciled on inboard side. Fleet procedures for using Rescue Strop REU-3/P part No. 216-1, are addressed in NWP 3-50.1 Series.		

Table 5-3. Cable Weight Cover Markings

Marking	Location	Letter Height
COVER, CABLE WEIGHT, RESCUE EQUIPMENT STOCK NO. [1680-00-511-2714] PART NO. [MIL-R-8592-4] CONTRACT NO. [stencil applicable number] MANUFACTURER [stencil name of manufacturer] MFD DATE [stencil month and year of manufacture]	Top of cover	1/4 Inch
Notes: 1 All markings shall be stamped or stencilled with wash-proof black ink. All words enclosed by brackets, in the column headed MARKING, shall not be stencilled on the equipment; they are to be regarded as instructions only.		

e. Inspect for damage to webbing of Rescue Strop. Damage other than frayed or separated stitches shall be cause for replacement. Replace stitches in accordance with FED-STD-751.

f. Remove load from Webbing Testing Machine.

g. Remove strop from Webbing Testing Machine.

h. For proof load testing without Webbing Testing Machine, suspend either end of Rescue Strop from a stationary object.

i. Gradually apply a force of 450 to 500 pounds to free end of Rescue Strop by addition of weights. Apply weights to strop for 15 minutes.

j. Inspect for damage to webbing of Rescue Strop. Damage other than frayed or separated stitches shall be cause for replacement. Replace stitches in accordance with FED-STD-751.

k. Remove load from Rescue Strop.

l. Document Proof Load Test on appropriate form and equipment

5.24 CLEANING.

The Rescue Strop and Cable Weight Cover shall be cleaned after every immersion in saltwater. To clean the Rescue Strop and Cable Weight Cover, proceed as follows:

Materials Required

Quantity	Description	Reference Number
As Required	Detergent, General Purpose	MIL-D-16791 NIIN 00-282-9699
As Required	Cloth, Lint-Free, Type II	MIL-C-85043 NIIN 00-165-7195

a. Clean strop and cover with general purpose detergent and water solution. Rinse well with fresh water.

b. Dry strop and cover with clean, dry, lint-free cloth.

5.25 REPAIRS.

Repairs are limited to minor stitching repair.

5.26 PACKING.

Packing of the Rescue Strop and Cable Weight Cover shall be performed by qualified personnel at any of the three maintenance levels. Pack the Rescue Strop as follows:

a. Attach gated snap hook to webbing keeper.

b. Adjust length of retainer strap with curved V-ring to fit in webbing keepers and secure keepers with snaps.

SECTION VII RANDON TECH ROPE LADDER (HH-60 ELD800PD SERIES AND TCL600)

5.27 GENERAL.

The Rope Ladder is used to assist personnel performing personnel recovery from a helicopter over water or land. AFTTP 3-3 series addresses information on the procedures and methods of' equipment utilization. Current approved ladders for helicopter use are manufactured by Randon Tech Manufacturing. Randontek@aol.com.

5.28 CONFIGURATION.

5.28.1 HH-60 and H-1 Helicopters. The Rope Ladder (HH-60 ELD800PD, floor mounted), (IIH-60 ELD800PD-60, ceiling mounted) and (H-1 ELPD800PD-1 (floor mounted) rope ladders are made of nylon fabric attaching aluminum rungs to form a 25 foot Ladder assembly. The ladder assembly is attached to the ladder detacher mechanism. The detacher mechanism is installed to the aircraft cargo/rappel rings via two 5000 lbs. carabiner, depending on ladder type.

WARNING

The ELD series are not designed to be employed on the MH-53. Series injury to personnel could result.

5.28.2 MH-53 Helicopters. The Rope Ladder (TCL600) is made of stainless steel and aluminum materials forming a 60 foot ladder assembly with 12 inch rung spacing. This ladder is used on MH-53 series helicopters. The cable rope ladder is attached to the aircraft floor using cargo restraining straps or the Universal Ladder Detacher assembly.

5.29 APPLICATION.

The Rope ladder is intended for use by personnel performing helicopter personnel recovery operations when it is impossible for the helicopter to make a landing on land or water. The ladder is used to recover personnel into the helicopter. The rope ladder can accommodate three personnel climbing at a time.

5.30 FUNCTION.

WARNING

This "short haul" usage is for emergency situations when risk to the team is greater than the risk of the ladder failing (e.g. under fire, during shark attack, fuel spill etc.).

The Rope ladder is configured to the aircraft cabin floor using two 5000 lb. locking carabiner or cargo restraining straps attached to the cargo floor rings or to the overhead rappel rings depending on ladder model/series. From a low hover ladder can be lowered to the ground allowing ground personnel to climb the ladder and recover themselves into the helicopter. The ELD800PD series was not designed to ferry personnel (short haul) while suspended during forward/rearward flight.

SECTION VIII MAINTENANCE OF ROPE LADDER (HH-60 ELD800PD SERIES)

5.31 GENERAL.

The following inspection and care criteria were developed with Randon Tech Manufacturing. These criteria will be used to inspect and care for all Randon Tech HH-60 ELD800PD (floor mounted), HH-60 ELD800PD-60 (ceiling mounted) and H-1 ELPD800PD-1 (floor mounted) rope ladders.

5.31.1 Service Life Expectancy. The service life begins for new ladders the date the ladder is removed from the scaled package. The effective service life of a rope ladder to be used for live operations is 6 years. New ladders will be sent for full refurbishment at 3 years from initial service life date (receive an off-white serial tracking tag). Refurbished ladders will be used 3 years from the date removed from the sealed package (receive a red serial tracking tag). Ladders meeting second 3 year mark will either be condemned or used for non-live training (top and bottom rungs painted yellow).

5.32 INSPECTION.

All Randon Tech Rope Ladders in the ELD800PD series shall be subjected to a 3 year manufacture refurbishment inspection. Ladders already in service will have a serial number tracking tag installed at this time. New ladders should issue with tracking tag already installed. After the 3 year cycle ladders need to be removed from service and sent to manufacture for refurbishment and inspection. Once refurbishment is complete the ladder may be used an additional 3 years. The life cycle of the ladder will not exceed 6 years of service life. After completing 6 years of service the ladder will be marked "Training Use Only" used for non-live training (top and bottom rungs painted yellow) or discarded. All maintenance actions or inspections shall be recorded on appropriate form.

5.33 LIVE USE PREFLIGHT INSPECTION.

WARNING

- If any nicks or excessive fraying to the point of broken strands are found, do not use the rope ladder for live operations, serious injury or death may result. See Figures 5-7 and 5-8.
- The following indicate obsolete equipment and should not be used for live operations; serious injury or death may result:
  - Corrosion on the rivet-washer connection points (should be stainless-stainless).
  - Rope ladder fabric with shinny appearance (similar to a vehicle seat belt).
  - Detacher housings without beveled or rounded edges

CAUTION

- When preparing the rope ladder for night operations do not use duct tape on the nylon fabric. Duct tape residue hinders the post flight fabric cleansing, and hides potential problem areas (e.g. use rubber bands, plastic zip ties).
- During inspection, dragging the rope ladder on concrete should be kept to a minimum to reduce abrasion and maintain normal service life.

a. Ensure detacher serial numbers match rope ladder.

b. Inspect detacher device fasteners for loosening and failure.

c. Inspect detacher pip pin for proper spring/operation.

d. Inspect carabiners for corrosion and proper operation.

e. Inspect wheeled rungs and fasteners for loosening and failure.

f. Inspect main ladder straps for dry-rot, holes, nicks and excessive fraying. See Figures 5-7, 5-8 and 5-9.

NOTE

- Ensure both sides of the rope ladder are visually inspected.
- Detachers are "powder-coated", there is no need to oil parts.
- Small amounts of hydraulic fluid are allowed on the fabric.
- Ensure the ladder is cleaned after use.

g. Inspect ladder rungs for damaged tubes or grip tape.

h. Inspect rung rivet-washer points for corrosion, cracks or stretched fabric.

i. Ensure no twists exist with main ladder straps.

j. Fold or roll the ladder into the stowed position on the cabin floor.

5.34 ROPE LADDER POST-FLIGHT AND CLEANING.

CAUTION

- To maintain the usable life of the live-use rope ladder, thoroughly clean the ladder and detacher after every salt water use, when contaminated with oils/hydraulic fluid and when heavily soiled after over-land use. Failure to clean salt and encrusted dirt will decrease rope ladder service life.

- Rope ladders should be stored in a dry environment, protected from prolonged, direct sunlight and fluorescent lights. These conditions decrease the rope ladder service life.

- When washing, use a non-chlorinated alkaline detergent using mixture ratios prescribed on the detergent. Do not use bleaches or chlorine products as they degrade the fabric fibers and their elasticity and decrease rope ladder service life.

a. Carefully remove chem-lights from ladder rungs as required.

b. Separate detacher from ladder and insert into soap solution.

c. Place detacher in rinse container then set out to dry.

d. Place ladder in soap solution container and allow soaking for thirty minutes

CAUTION

Use a fresh water container or an open hose to rinse rope ladder. High pressure washers will damage rope ladder fabric and decrease service life.

e. Move ladder through rinse container until visibly free from soap.

f. Attach ladder to detacher (check matching serial numbers).

g. Lay system horizontally (flat) to dry. Do not hang rope ladder to dry.

h. Once dry, place in carrying bag/harness and store on "live-use" rack.

5.35 REPAIRS.

Maintenance of the Rope ladder Assembly is limited to inspection and cleaning. Ladders requiring repair will be sent to manufacturer for refurbishment.

5.36 STORAGE REQUIREMENTS.

Ladder fabric deteriorates at a greater rate under certain conditions decreasing service life. Ladders should be stored out of extensive direct sunlight and fluorescent light. Ladders should be kept in a climate controlled low-humidity environment. When ladders are not in use they should be stored in the ladder carrying case.

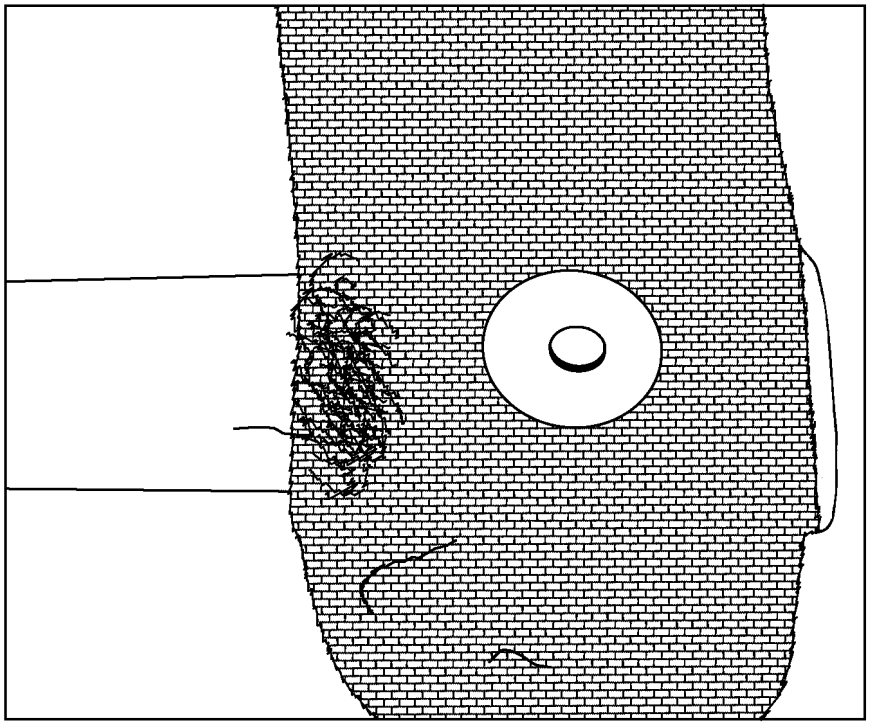

Figure 5-7. Fraying Example

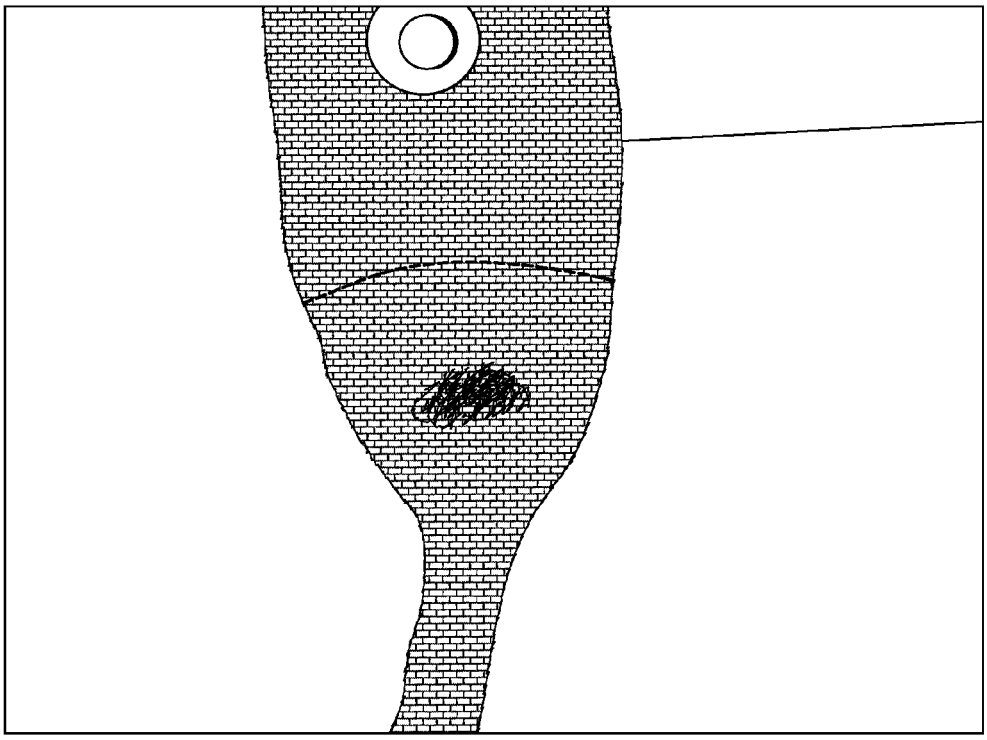

Figure 5-8. Cut Example

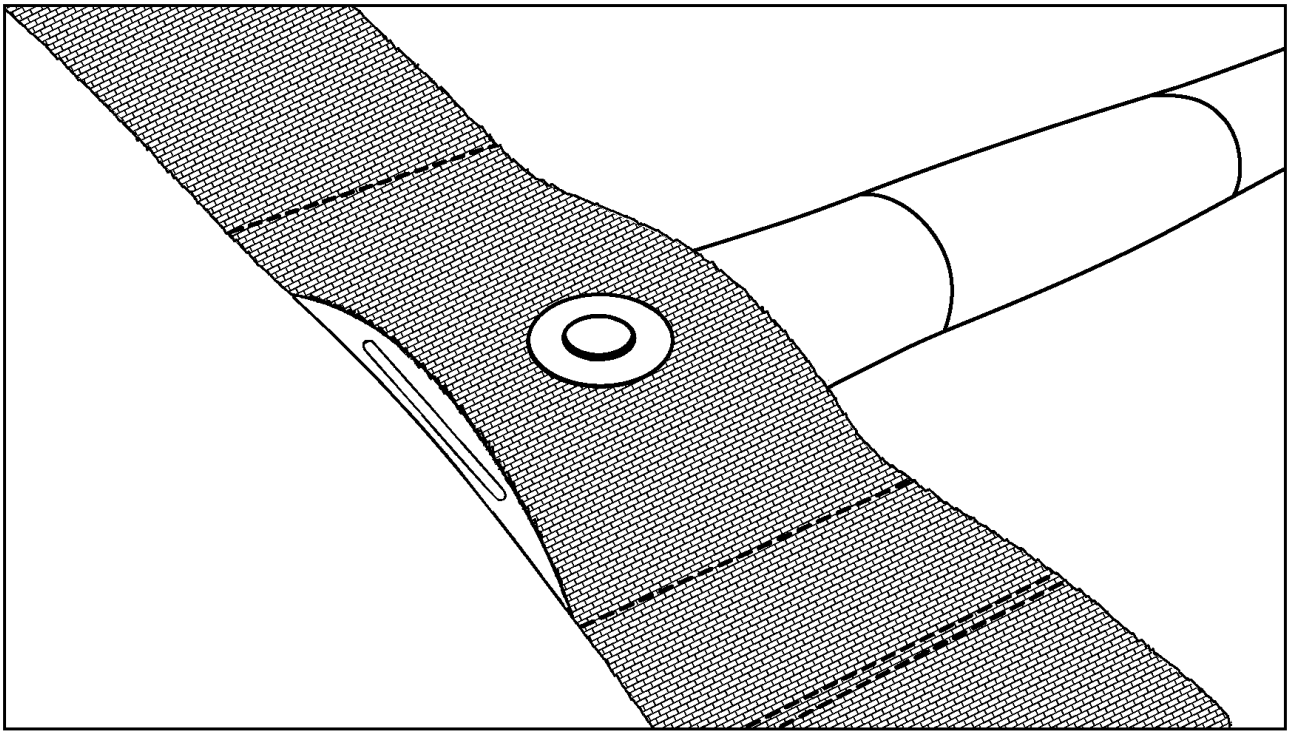

Figure 5-9. Good Rivet and Fabric Example

SECTION IX MAINTENANCE OF ROPE LADDER (TCL600)

5.37 LIVE USE PREFLIGHT INSPECTION.

NOTE

A ladder which does not fulfill any of the inspection criteria must be withdrawn immediately from active use.

a. Inspect entire length of ladder for fraying of the braided cable.

b. Inspect entire length of ladder for any corrosion.

c. Note any kinks in the cable and inspect closely for wire separation.

d. Lay out entire ladder and inspect for proper rung location. A loosened rung positioning swedge button will be readily visible by noting any rungs that appear to be at an angle other than 90 degrees to the cable.

e. Inspect the swedged eyes at the floot attachment points for slippage or cable movement of any kind.

f. Make necessary Inspection entries on appropriate form.

SECTION X FRIES/FAST ROPES (MIL SPEC: MIL-F-44422)

5.38 GENERAL.

Fast Rope/FRIES are made of interwoven hemp with a diameter of approximately 2 inches with a hook-up point on one end. Lengths will vary, depending on the needs of the mission (e.g., terrain, tactical environment, or user requirements), but usually are found in 60, 90 and 120 foot standard lengths. Fast Ropes provide a quick means to deploy personnel when aircraft cannot land. Extraction loops integral to the FRIES rope allows the team to be lifted and moved to an alternate location. AFTTP 3-3 series addresses information on the procedures and methods of equipment utilization.

5.39 CONFIGURATION.

Fast ropes are configured on aircraft by attaching the loop end of the fast rope to the aircrafts H/FRIES bar or approved attachment assemblies. The remainder of the rope is coiled and secured to the aircraft via a tie down device.

5.40 APPLICATION.

The Fast/FRIES rope is intended for use by personnel performing helicopter personnel infiltration operations when it is impossible for the helicopter to make a landing on land or water. The Fast/PRIES rope is used to infiltrate personnel to the ground from the helicopter.

5.41 FUNCTION.

The fast/FRIES rope is configured to the aircrafts II/FRIES bar or approved attachment assemblies. From a hover the Fast/FRIES rope is deployed to the ground allowing personnel to slide down the rope and recover themselves on the ground. When using the FRIES rope for extraction, The FRIES rope is configured to the aircrafts FRIES bar or approved attachment assemblies. From a hover the FRIES rope is deployed to the ground allowing personnel to hook into the rope. Once all personnel are secured to the rope the aircraft can lift the personnel off the ground and fly away to a new location.

SECTION XI FRIES/FAST ROPES MAINTENANCE AND INSPECTION (MIL SPEC: MIL-F-44422)

5.42 INSPECTION.

Before conducting a FRIES operation, inspect all FRIES equipment for serviceability and readiness for use.

a. Checks the woven loop on the mount end for excessive wear or chemical contamination.

b. Checks the rope along its entire length for fraying, cuts, and chemical contamination. Inspect for any cut, chafe, or nicks that affect integrity of the rope.

c. Do not use a rope that is severely frayed. (Light fraying on the rope from normal use does not weaken the rope.)

d. Do not use a rope when any single strand is cut halfway through or has two or more cuts that penetrate one-third or more through any strand's thickness within 1 foot of the running length of the FRIES.

e. Inspects the rope for contamination of acid, alkaline compounds, saltwater, fire extinguisher solutions, or petroleum-based solvents. Changes in color caused by chemicals are usually blotchy and have an unusual odor. Although used ropes gradually change color, such changes do not indicate a decrease in strength unless the change is due to contact with strong chemicals. Changes occurring because of use are usually uniform throughout the length of the rope.

f. Inspects the extraction loops to the same standard as the main rope. Ensures the woven attachment loops are secure.

g. Make necessary Inspection entries on appropriate form.

5.43 CLEANING.

Equipment that is exposed to salt water or becomes imbedded with dirt or mud should be washed and rinsed in fresh water (within 72 hours) and hung up to dry (indoors) on hardwood pegs (out of direct sunlight).

CAUTION

Use a fresh water container or an open hose to rinse FRIES ropes. High pressure washers will damage rope fabric and decrease service life.

5.44 STORAGE.

FRIES ropes must always be stored in a clean, cool, dry space out of direct sunlight and free of chemicals or chemical vapors. Equipment that becomes wet with fresh water should be hung up to dry (indoors) on hardwood pegs.