T.O. 1-1A-9
NAVAIR 01-1A-9

TECHNICAL MANUAL

ENGINEERING SERIES
FOR AIRCRAFT REPAIR

AEROSPACE METALS -
GENERAL DATA
AND USAGE FACTORS

(ATOS)

BASIC AND ALL CHANGES HAVE BEEN MERGED TO MAKE THIS A COMPLETE PUBLICATION

DISTRIBUTION STATEMENT - Approved for public release; distribution is unlimited. Other request for this document should be referred to WR-ALC/LKC, Robins AFB GA 31098. Questions concerning technical content should be referred to WR-ALC/LESG, Robins AFB GA 31098.

PUBLISHED UNDER AUTHORITY OF THE SECRETARY OF THE AIR FORCE AND BY DIRECTION OF THE CHIEF OF THE NAVAL AIR SYSTEMS COMMAND.

26 FEBRUARY 1999

CHANGE 4 - 17 JANUARY 2003

INSERT LATEST CHANGED PAGES. DESTROY SUPERSEDED PAGES.

LIST OF EFFECTIVE PAGES

NOTE: The portion of the text affected by the changes is indicated by a vertical line in the outer margins of the page. Changes to illustrations are indicated by miniature pointing hands. Changes to wiring diagrams are indicated by shaded areas.

Dates of issue for original and changed pages are:

Original ..... 0..... 26 February 1999
Change..... 1..... 25 June 2001
Change..... 2.....1 October 2001
Change..... 3..... 26 July 2002
Change..... 4.....17 January 2003

TOTAL NUMBER OF PAGES IN THIS PUBLICATION IS 290, CONSISTING OF THE FOLLOWING:

Page No.	*Change No.
Title	**4**
A	**4**
i - vi	**4**
vii Deleted	**4**
viii Blank Deleted	**4**
1-1	1
1-2 Blank	0
2-1 - 2-7	0
2-8	**4**
2-9 - 2-12	0
2-13	1
2-14 - 2-26	0
2-27	1
2-28	0
2-29 - 2-33	1
2-34	**4**
2-35 - 2-42	0
2-43	1
2-44 - 2-51	0
2-52	1
2-53	3
2-54 - 2-72	0
2-73	1
2-74 Blank	1
2-75 - 2-120 Deleted	1
2-121	1
2-122 - 2-136	0
3-1 - 3-17	0
3-18 - 3-19	**4**
3-20	2
3-21	1
3-22	**4**
3-23 - 3-24	0
3-25 - 3-26	1
3-27 - 3-31	0
3-32	1
3-33 - 3-38 Deleted	1
3-39 Blank	1
3-40	1
3-41 - 3-49	0
3-50	3
3-51 - 3-63	0
3-64 Blank	0
4-1 - 4-4	0
4-5	**4**
4-6 - 4-14	0
4-15	1
4-16	**4**
4-17 - 4-18	0
4-19 - 4-22	1
4-23 - 4-43 Deleted	1
4-44 Blank Deleted	1
5-1	0
5-2 - 5-3	1
5-4	0
5-5 - 5-6	**4**
5-7 - 5-11	0
5-12	2
5-13 - 5-14 Deleted	1
5-15	1
5-16 Blank	1
5-17 - 5-19	0
5-20 Blank	0
6-1 - 6-10	0
6-11	**4**
6-12	0
6-13	**4**
6-14 Blank	0
7-1 - 7-5	0
7-6 - 7-10	1
7-11 - 7-15	0
7-16 Blank	0
8-1 - 8-14	0
9-1 - 9-12	0
A-1 - A-24	0
Glossary 1 - Glossary 10	0

*Zero in this column indicates an original page

TABLE OF CONTENTS

Section		Page
I	INTRODUCTION	1-1
1-1	PURPOSE	1-1
II	FERROUS (STEEL) ALLOYS	2-1
2-1	Classification	2-1
2-2	SAE Numbering System	2-1
2-4	Carbon Steels	2-1
2-7	Nickel Steels	2-2
2-8	Chromium Steels	2-2
2-9	Chromium - Nickel Steels	2-2
2-11	Chrome - Vanadium Steels	2-3
2-12	Chrome - Molybdenum Steels	2-3
2-13	Principles of Heat Treatment of Steels	2-3
2-14	Hardening	2-3
2-19	Quenching Procedure	2-4
2-26	Tempering (Drawing)	2-4
2-29	Normalizing	2-5
2-30	Case Hardening	2-5
2-35	Carburizing	2-6
2-41	Cyaniding	2-7
2-42	Nitriding	2-7
2-43	Heat Treating Equipment	2-7
2-48	Heat Control, Furnace Temperatures Survey and Temperature Measuring Equipment	2-8
2-53	Furnace Control Instruments Accuracy	2-8
2-55	Salt Bath Control	2-10
2-58	Quenching Tanks and Liquids	2-10
2-60	Heat Treating Procedures	2-10
2-68	Hardness Testing	2-11
2-73	Specification Cross Reference	2-11
2-74	General Heat Treating Temperatures, Composition (Chemical) and Characteristics of Various Steel and Steel Alloy	2-35
2-75	Machining of Steels (General)	2-60
2-81	Machining Corrosion Resisting Steel	2-65
2-117	Deleted	
2-128	Deleted	
2-131	Deleted	
2-135	Deleted	
2-147	Deleted	
2-152	Deleted	
2-168	Deleted	
2-184	Deleted	
2-186	Deleted	
2-195	Deleted	
2-199	Deleted	
2-200	Deleted	
2-201	Deleted	
2-202	Deleted	
2-203	Deleted	
2-216	Deleted	
2-234	Fabrication of Ferrous Alloys	2-121
2-292	Steel Surface Finishes	2-130
III	ALUMINUM ALLOYS	3-1
3-1	Classification	3-1
3-4	Commercial and Military Designations	3-1
3-8	Mechanical Properties	3-2
3-16	Physical Properties	3-18
3-17	Heat Treatment of Aluminum Alloys	3-18
3-51	Heat Treatment	3-24
3-56	Heat Treating Equipment	3-24
3-70	Fabrication	3-28
3-73	Forming Sheet Metal	3-28
3-96	Deleted	
3-97	Deleted	
3-118	Deleted	
3-123	Deleted	
3-131	Deleted	
3-145	Deleted	
3-154	Deleted	
3-175	Machining	3-45
3-179	Cutting Tools for Machining Aluminum	3-45
3-180	Turning	3-46
3-183	Milling-Aluminum	3-46
3-189	Shaping and Planing	3-49
3-195	Tapping	3-56
3-198	Filing	3-56
3-202	Reaming	3-57
3-204	Sawing	3-57
3-210	Grinding	3-58
3-216	Polishing	3-58
3-218	Roughing	3-58
3-219	Greasing or Oiling	3-58
3-221	Buffing	3-59
3-223	Hardness Testing	3-59
3-226	Non-Destructive Testing/Inspection	3-59
3-228	Anodizing Process for Inspection of Aluminum Alloy Parts	3-59
3-231	Aluminum Alloy Effects on Scratches on Clad Aluminum Alloy	3-59
3-233	Allowable Defects	3-59
3-234	Harmful Scratches	3-60

TABLE OF CONTENTS - Continued

Section Page

3-241 Disposition of Scratches Sheets/Parts 3-60
3-242 Cleaning of Aluminum Alloy Sheet (Stock) 3-60

IV MAGNESIUM ALLOYS 4-1
4-1 Classification 4-1
4-4 Definitions 4-1
4-13 Safety Requirements for Handling and Fabrication of Magnesium Alloys 4-2
4-19 Safety Precautions for All Alloys (Including Fire Hazards) 4-3
4-22 Grinding and Polishing Safety Practices 4-14
4-24 Deleted
4-25 Heat Treating Safety Practices 4-15
4-26 Identification 4-16
4-29 Heat Treating Magnesium Alloys -(General) 4-16
4-45 Alloy General Characteristic Information 4-19
4-47 Deleted
4-77 Deleted
4-78 Deleted
4-79 Deleted
4-82 Deleted
4-93 Deleted

V TITANIUM AND TITANIUM ALLOYS 5-1
5-1 Classification 5-1
5-4 General 5-1
5-5 Military and Commercial Designations 5-1
5-6 Physical Properties 5-1
5-7 Mechanical Properties 5-1
5-10 Methods of Identification 5-1
5-11 Hardness Testing 5-1
5-12 Tensile Testing 5-1
5-13 Non-Destructive Testing 5-1
5-14 Fire Damage 5-6
5-15 Heat Treatment - (General) 5-6
5-22 Hydrogen Embrittlement 5-8
5-25 Fabrication 5-11
5-26 Forming Sheet Metal - (General) 5-11
5-28 Draw Forming 5-11
5-29 Hydraulic Press Forming 5-11
5-32 Stretch Forming 5-11
5-33 Drop - Hammer Forming 5-11
5-34 Joggling 5-12
5-35 Blanking and Shearing 5-12
5-37 Deleted
5-38 Deleted
5-39 Deleted
5-40 Deleted
5-42 Deleted
5-43 Deleted
5-45 Deleted
5-47 Soldering 5-15
5-48 Riveting 5-15
5-51 Machining and Grinding 5-17
5-52 Machining 5-17
5-54 Turning 5-17
5-57 Milling 5-17
5-63 Drilling 5-17
5-66 Tapping 5-19
5-69 Reaming 5-19
5-70 Grinding 5-19

VI COPPER AND COPPER BASE ALLOYS 6-1
6-1 Copper and Copper Base Alloys 6-1
6-3 Copper Alloying Elements 6-1
6-5 Heat Treatment and Hot Working Temperature of Copper Alloys 6-1
6-7 Stress Relief of Copper Alloys 6-1
6-9 Machining Copper and Copper Alloys 6-1
6-10 Wrought - Copper - Beryllium Alloys 6-1
6-12 Heat Treating Procedures and Equipment Requirements 6-10
6-15 Solution - Heat Treatment Copper Beryllium 6-11
6-17 Precipitation or Age Hardening 6-11

VII TOOL STEELS 7-1
7-1 General 7-1
7-4 Alloying Elements in Tool Steels 7-1
7-5 Specifications 7-1
7-6 Class Designations 7-5
7-7 Applications of Tool Steels 7-5
7-9 Selection of Material for a Cutting Tool 7-5
7-16 Heat Treat Data 7-6
7-18 Distortion in Tool Steels 7-6
7-19 Deleted
7-21 Deleted
7-22 Deleted
7-23 Deleted

VIII TESTING AND INSPECTION, HARDNESS TESTING 8-1

TABLE OF CONTENTS - Continued

Section		Page
8-1	General	8-1
8-3	Methods of Hardness Testing	8-1
8-5	Brinell Hardness Test	8-1
8-8	Rockwell Hardness Test	8-1
8-15	Vickers Pyramid Hardness Test	8-4
8-18	Shore Scleroscope Hardness Test	8-8
8-20	Testing with the Scleroscope	8-9
8-21	Tensile Testing	8-9
8-22	Decarburization Measurement	8-9
8-24	Hardness Method	8-10
8-27	Nondestructive Inspection Methods	8-14
8-33	Chemical Analysis	8-14
8-34	Spectrochemical Analysis	8-14

Section		Page
IX	HEAT TREATMENT	9-1
9-1	General	9-1
9-9	Special Heat Treatment Information	9-1
9-11	Tint Test for Determining Coating Removal from Nickel Base and Cobalt Base Alloys	9-1
9-13	Titanium Alloy Parts	9-3
9-16	Solution, Stabilization, or Precipitation Heat Treatment	9-3
9-38	Stress-Relief After Welding	9-8
9-59	Local Stress-Relief	9-11
9-68	Description of Methods	9-11
A	Supplemental Data	A-1
	Glossary	GLS 1

LIST OF ILLUSTRATIONS

Figure	Title	Page
2-1	Number and Distribution of Thermocouples	2-9
2-2	Deleted	
2-3	Deleted	
2-4	Stretch Forming	2-127
2-5	Surface Roughness	2-135
3-1	Head to Alloy Identification Method	3-20
3-2	Drill Designs and Recommended Cutting Angles	3-55
4-1	Typical Dust Collectors for Magnesium	4-22
4-2	Deleted	
4-3	Deleted	
4-4	Deleted	
8-1	Brinell Hardness Tester	8-4
8-2	Rockwell Hardness Tester	8-5
8-3	Attachments for Rockwell Tester	8-6
8-4	Vickers Pyramid Hardness Tester	8-7
8-5	Standard Pyramid Diamond Indentor	8-8
8-6	Shore Scleroscope	8-8
8-7	Test Specimens	8-11

LIST OF TABLES

Number	Title	Page
2-1	Soaking Periods for Hardening Normalizing and Annealing (Plain Carbon Steel)	2-10
2-2	Specification Cross Reference	2-12
2-3	Cutting Speeds and Feeds for SAE 1112 Using Standard High Speed Tools	2-61
2-4	Machinability Rating of Various Metals	2-61
2-5	Conversion of Surface Feet Per Minute (SFM) to Revolutions Per Minute (RPM)	2-63
2-6	Tool Correction Chart	2-64

LIST OF TABLES - Continued

Number	Title	Page
2-7	General Machining Comparison of Corrosion Resisting Steel to Free Machining Screw Stock B1112	2-65
2-8	Suggested Cutting Speeds and Feeds	2-66
2-9	Tool Angles - Turning	2-68
2-10	Suggested Milling Cutting Speeds and Feeds	2-69
2-11	Suggested Tool Angles - Milling	2-70
2-12	Drilling Speeds for Corrosion Resisting Steel	2-70
2-13	Tapping Allowances (Holes Size to Screw Size)	2-71
2-14	Deleted	
2-15	Deleted	
2-16	Deleted	
2-17	Deleted	
2-18	Deleted	
2-19	Deleted	
2-20	Deleted	
2-21	Deleted	
2-22	Deleted	
2-23	Deleted	
2-24	Deleted	
2-25	Deleted	
2-26	Deleted	
2-27	Deleted	
2-28	Deleted	
2-29	Deleted	
2-30	Deleted	
2-31	Deleted	
2-32	Deleted	
2-33	Deleted	
2-34	Cold Bend Radii (Inside) Carbon/Low Alloy Steels	2-128
2-35	Cold Bend Radii (Inside) Corrosion Resistant Steel Alloys	2-128
2-36	Forging Temperature Ranges for Corrosion Resistant Steel	2-128
2-37	Galvanic Series of Metals and Alloys	2-134
2-38	Surface Roughness and Lay Symbols	2-136
3-1	Designations for Alloy Groups	3-1
3-2	Aluminum Alloy Designation and Conversions to 4 Digit System	3-1
3-3	Federal and Military Specifications	3-3
3-4	Chemical Composition Nominal and General Use Data 1/	3-9
3-5	Mechanical Properties - Typical	3-14
3-6	Physical Properties - Standard Alloys	3-16
3-7	Heat Treating (Soaking) Temperatures	3-17
3-8	Soaking Time for Solution Heat Treatment of All Wrought Products	3-23
3-9	Soaking Time for Solution Treatment of Cast Alloys	3-23
3-10	Recommended Maximum Quench Delay, Wrought Alloys (For Immersion Type Quenching)	3-24
3-11	Precipitation (Aging) Treating Temperatures, Times and Conditions	3-25
3-12	Reheat Treatment of Alclad Alloys	3-27
3-13	Cold Bend Radii (Inside) for General Applications	3-29
3-14	Maximum Accumulative Reheat Times for Hot Forming Heat Treatable Alloys at Different Temperatures	3-32
3-15	Deleted	
3-16	Deleted	
3-17	General Rivet (Alum) Identification Chart	3-42
3-18	General Aluminum Rivet Selection Chart (Rivet Alloy vs Assembly Alloy)	3-45
3-19	Shear Strength of Protruding and Flush Head Aluminum Alloy Rivets, Inch Pounds	3-47
3-20	Bearing Properties, Typical, of Aluminum Alloy Plates and Shapes	3-48
3-21	Standard Rivet Hole Sizes with Corresponding Shear and Bearing Areas for Cold Driven Aluminum Alloy Rivets	3-50
3-22	Turning Speeds and Feeds	3-51
3-23	Tool Angles - Turning	3-52
3-24	Milling - Speeds and Feeds	3-52
3-25	Tool Angles - Milling	3-53
3-26	Shaping and Planing - Speeds and Feeds	3-54
3-27	Shaping Tool Angles	3-54
3-28	Thread Constant for Various Standard Thread Forms	3-56
4-1	Cross-Reference, Alloy Designations to Specifications	4-3
4-2	Alloy Designation Cross-Reference	4-6
4-3	Chemical Properties of Magnesium Alloys	4-7

LIST OF TABLES - Continued

Number	Title	Page
4-4	Mechanical Properties Magnesium Extrusions and Forgings at Room Temperature - Typical	4-9
4-5	Mechanical Properties Magnesium Alloy Sheet and Plate at Room Temperature - Typical	4-11
4-6	Mechanical Properties of Magnesium Alloy Castings at Room Temperatures	4-12
4-7	Physical Properties - Magnesium Alloy @ 68 °F	4-13
4-8	Solution Heat Treating Temperatures and Holding Times	4-18
4-9	Artificial Aging (Precipitation Treatment)	4-19
4-10	Deleted	
4-11	Deleted	
4-12	Deleted	
4-13	Deleted	
4-14	Deleted	
4-15	Deleted	
4-16	Deleted	
4-17	Deleted	
4-18	Deleted	
4-19	Deleted	
4-20	Deleted	
4-21	Deleted	
4-22	Deleted	
4-23	Deleted	
4-24	Deleted	
4-25	Deleted	
4-26	Deleted	
4-27	Deleted	
4-28	Deleted	
4-29	Deleted	
4-30	Deleted	
4-31	Deleted	
5-1	Specification Cross Reference Titanium Alloy	5-2
5-2	Nominal Mechanical Properties at Room Temperature	5-7
5-3	Heat Treat, Stress Relief and Annealing Temperatures and Times	5-9
5-4	Recommended Minimum CCLD Bend Radii	5-12
5-5	Deleted	
5-6	Turning Speeds for Titanium Alloys	5-18
5-7	Tool Angles for Alloys	5-18
5-8	Speeds and Feeds for Milling	5-18
5-9	Angles for Tool Grinding	5-19
6-1	Chemical Composition by Trade Name	6-2
6-2	Hot Working and Annealing Temperatures for Copper and Wrought Copper Alloys	6-9
6-3	Typical Stress-Relief Treatments for Certain Copper Alloys	6-11
6-4	Standard Machinability Rating of Copper Alloys	6-12
6-5	Typical Engineering Properties	6-13
6-6	Age Hardening Time-Temperature Conditions and Material Temper - Designations	6-13
7-1	Tool Steel Specifications	7-2
7-2	Chemical Composition, Tool Steel	7-3
7-3	Tool Steel Selection	7-5
7-4	Tool Steel Hardening and Tempering Temperatures	7-5
7-5	Forging, Normalizing and Annealing Treatments of Tool and Die Steels	7-7
7-6	Thermal Treatment for Hardening and Tempering Tool Steel - General	7-11
7-7	Comparison of Tool Steel Properties	7-14
8-1	Hardness Conversion Chart	8-3
8-2	Rockwell Scales, Loads and Prefix Letters	8-10
8-3	Approximate Hardness - Tensile Strength Relationship of Carbon and Low Alloy Steels	8-12
9-1	Typical Heat Treatment Application	9-1
9-2	Cross-Index for Solution, Stabilization or Precipitation Heat Treatments	9-4
9-3	Cross-Index for Stress-Relief Heat Treatments	9-9
A-1	Chemical Symbols	A-1
A-2	Decimal Equivalents	A-2
A-3	Engineering Conversion Factors	A-6
A-4	Table of Weights - Aluminum and Aluminum Alloy	A-8
A-5	Table of Weights - Brass	A-9
A-6	Table of Weights - Bronze	A-10
A-7	Table of Weights - Copper	A-11
A-8	Table of Weights - Iron	A-12
A-9	Table of Weights - Lead	A-12
A-10	Table of Weights - Magnesium and Magnesium Alloy	A-12
A-11	Table of Weights - Nickel Chromium Iron Alloy (Inconel)	A-13
A-12	Table of Weights - Nickel Copper Alloy	A-13
A-13	Table of Weights - Steel	A-13

LIST OF TABLES - Continued

Number	Title	Page
A-14	Table of Weights - Zinc	A-16
A-15	Temperature Conversion Chart	A-17
A-16	Standard Bend Radii for 90° Cold Forming-Flat Sheet	A-18
A-17	Metal Bending and Bend Radii Bend Allowances Sheet Metal Bend Allowances Per Degree of Bend Aluminum Alloys	A-19
A-18	Bend Set Back Chart	A-21
A-19	Comparative Table of Standard Gages	A-22
A-20	Melting Points Approximate	A-23

SECTION I

INTRODUCTION

1-1. PURPOSE.

1-2. This is one of a series of technical or engineering technical manuals prepared to assist personnel engaged in the maintenance and repair of Aerospace Weapon Systems and Supporting Equipment (AGE). Army Personnel: Wherever the text of this manual refers to other technical orders (T.O.'s) for supporting information, refer to comparable Army documents.

1-3. This technical manual provides precise data on specific metals to assist in selection, usage and processing for fabrication and repair. It includes such data as specification cross reference; approved designation system for alloys and tempers; temperatures and other controls for heat treatments; mechanical and physical properties processing instructions for basic corrosion prevention; forming characteristics; and other information required for general aerospace weapon system repair. Procedures for general foundry practice, sand control, gating and risering of both ferrous and non-ferrous castings may be obtained from available commercial handbooks and/or publications. Due to the many types, grades, deversified uses and new developments of metal products, it may not include all data required in some instances and further study and citation of this data will be required. If a requirement exists for information not included, a request for assistance should be made to WR-ALC, LEM.

1-4. The information/instruction contained herein are for general use. If a conflict exists between this technical manual and the specific technical manual(s) or other approved data for a particular weapon, end item, equipment, etc., the data applicable to the specific item(s) will govern in all cases.

1-5. The use of "shall", "will", "should" and "may" in this technical manual is as follows:

a. Whenever the word "shall" appears, it shall be interpreted to mean that the requirements are binding.

b. The words "will", "should" and "may", shall be interpreted as nonmandatory provisions.

c. The word "will" is used to express declaration of purpose.

d. The word "should" is used to express nonmandatory desired or preferred method of accomplishment.

e. The word "may" is used to express an acceptable or suggested means of accomplishment.

1-6. Deleted

1-7. WELDING. Information on welding aerospace metals is contained in NAVAIR 01-1A-34, T.O. 00-25-252, T.C. 9-238.

SECTION II

FERROUS (STEEL) ALLOYS

2-1. CLASSIFICATION.

2-2. SAE NUMBERING SYSTEM. A numeral index system is used to identify the compositions of the SAE steels, which makes it possible to use numerals that are partially descriptive of the composition of material covered by such numbers. The first digit indicates the type to which the steel belongs; for example "1" indicates a carbon steel; "2" a nickel steel; and "3" a nickel chromium steel. In the case of the simple alloy steels, the second digit generally indicates the approximate percentage of the predominant alloying element. Usually the last two or three digits indicate the approximate average carbon content in "points" or hundredths of 1 percent. Thus "2340" indicates a nickel steel of approximately 3 percent nickel (3.25 to 3.75) and 0.40 percent carbon (0.38 to 0.43). In some instances, in order to avoid oonfusion, it has been found necessary to depart from this system of identifying the approximate alloy composition of a steel by varying the second and third digits of the number. An instance of such departure is the steel numbers selected for several of the corrosion --and heat resisting alloys.

2-3. The basic numerals for the various types of SAE steel are:

TYPE OF STEEL	NUMERALS (AND DIGITS)
Carbon Steels	1xxx
Plain Carbon	10xx
Free Cutting (Screw Stock)	11xx
Manganese Steels	13xx
Nickel Chromium Steels	3xxx
1.25 Percent Nickel; 0.65 percent Chromium	31xx
Corrosion and Heat Resisting	303xx
Molybdenum Steels	4xxx
0.25 Percent Molybdenum	40xx
Nickel-Chromium-Molybdenum Steels	
1.80% nickel; 0.50 and 0.80% Chromium; 0.25% Molybdenum	43xx
0.55% Nickel; 0.50 and 0.65% Chromium; 0.20% Molybdenum	86xx
0.55% Nickel; 0.50 Chromium 0.25% Molybdenum	87xx
3.25% Nickel; 1.20 Chromium 0.12% Molybdenum	93xx
Nickel-Molybdenum Steels	
1.75 Percent Nickel; 0.25 percent Molybdenum	46xx
3.50 Percent Nickel; 0.25 percent Molybdenum	48xx
Chromium Steels	5xxx
Low Chromium	50xx
Medium Chromium	51xxx
High Chromium	52xxx
Corrosion and Heat Resisting	514xx and 515xx
Chromium-Vanadium Steel	6xxx
0.80-1.00 percent Chromium, 0.10-0.15 Vanadium	61xx
Silicon Manganese Steels	9xxx
A Percent Silicon	92xx
Low Alloy, High Tensile	950
Boron Intensified	xxBxx
Leaded Steels	xxLxx

2-4. CARBON STEELS. Steel containing carbon in percentages ranging from 0.10 to 0.30 percent is classed as low carbon steel. The equivalent SAE numbers range from 1010 to 1030. Steels of this grade are used for the manufacture of articles such as safety wire, certain nuts, cable bushing, etc. This steel in sheet form is used for secondary structural parts and clamps and in tubular form for moderately stressed structura1 parts.

2-5. Steel containing carbon in percentages ranging from 0.30 to 0.50 percent is classed as medium carbon steel. This steel is especially adaptable for machining, forging, and where surface hardness is

important. Certain rod ends, light forgings, and parts such as Woodruff keys, are made from SAE 1035 steel.

2-6. Steel containing carbon in percentage ranging from 0.50 to 1.05 percent is classed as high carbon steel. The addition of other elements in varying quantities adds to the hardness of this steel. In the fully heat-treated condition it is very hard and will withstand high shear and wear, but little deformation. It has limited use in aircraft construction. SAE 1095 in sheet form is used for making flat springs and in wire form for making coil springs.

2-7. NICKEL STEELS. The various nickel steels are produced by combining nickel with carbon steel. Some benefits derived from the use of nickel as an alloy in steel are as follows:

a. Lowers the percentage of carbon that is necessary for hardening. The lowering of the carbon content makes the steel more ductile and less susceptible to uneven stress.

b. Lowers the critical temperature ranges (heating and cooling) and permits the use of lower heating temperatures for hardening.

c. Hardening of the nickel alloy steels at moderate rates of cooling has the advantage of lowering the temperature gradients, reducing internal stress/warpage and permits deeper/more uniform hardening.

d. The low heat treating temperatures required, reduces the danger of overheating, excessive grain growth and the consequent development of brittleness.

e. The characteristics depth hardening from the addition of nickel to steel as an alloy results in good mechanical properties after quenching and tempering. At a given strength (except for very thin sections/parts) the nickel steels provide greatly improved elastic properties, impact resistance and toughness.

2-8. CHROMIUM STEELS. Chromium steel is high in hardness, strength, and corrosion resistant properties. SAE 51335 steel is particularly adaptable for heat-treated forgins which require greater toughness and strength than may be obtained in plain carbon steel. It may be used for such articles as the balls and rollers of anti-friction bearings.

2-9. CHROMIUM-NICKEL STEELS. Chromium and nickel in various proportions mixed with steel form the chrome-nickel steels. The general proportion is about two and one-half times as much nickel as chromium. For all ordinary steels in this group the chromium content ranges from 0.45 to 1.25 percent, while the nickel content ranges from 1 to 2 percent. Both nickel and chromium influence the properties of steel; nickel toughens it, while chromium hardens it. Chrome-nickel steel is used for machined and forged parts requiring strength, ductility, toughness and shock resistance. Parts such as crankshafts and connecting rods are made of SAE 3140 steel.

2-10. Chrome-nickel steel containing approximately 18 percent chromium and 8 percent nickel is known as corrosion-resistant steel. It is usually identified as aisi types 301, 302, 303, 304, 304L, 309, 316, 316L, 321, 347, 347F or Se, etc., however; the basic 18-8 chrome-nickel steel is type 302. The other grades/types have been modified by changing or adding alloying elements to that contained in the basic alloy. The alloys are varied to obtain the required mechanical properties for some specific purpose such as improving corrosion resistance or forming machining, welding characteristics, etc. The following are examples of variations:

a. 301-Chromium and Nickel (approximate 0.5 Nickel) is lowered to increase response to cold working.

b. 302-Basic Type 18 Chromium 8 Nickel.

c. 303-Sulfur(s) or Selenium (se) added for improved machining characteristics.

d. 304-Carbon(c) lowered to reduce susceptibility to carbide precipitation. This alloy is still subject to carbide precipitation from exposure to temperatures 800-1500F range and this shall be considered when it is selected for a specific application.

e. 304L-Carbon(c) lowered for welding applications.

f. 309-Cr and Ni higher for additional corrosion and scale resistance.

g. 316-Molybdenum (Mo) added to improve corrosion resistance and strength.

h. 316L-C- lowered for welding applications.

i. 321-Titanium (Ti) added to reduce/avoid carbide precipitation (stabilized grade)

j. 347-Columbium(Cb), Tantalum (Ta)- Added to reduce/avoid carbide precipitation (stabilized grade).

k. 347F or Se - Sulfur(s) or Selenium (Se) added to improve machinability.

The chrome-nickel steels are used for a variety of applications on aircraft and missiles. In plate and sheet form it is used for firewalls, surface skin,

exhaust stacks, heater ducts, gun wells, ammunition chutes, clamps, heat shields/deflectors, fairing, stiffeners, brackets, shims, etc. In bar and rod it is used to fabricate various fittings, bolts, studs, screws, nuts, couplings, flanges, valve stems/seats, turn-buckles, etc. In wire form it is used for safety wire, cable, rivets, hinge pins, screens/screening and other miscellaneous items.

2-11. CHROME-VANADIUM STEELS. The vanadium content of this steel is approximately 0.18 percent and the chromium content approximately 1.00 percent. Chrome-vanadium steels when heat-treated have excellent properties such as strength, toughness, and resistance to wear and fatigue. A special grade of this steel in sheet form can be cold-formed into intricate shapes. It can be folded and flattened without signs of breaking or failure. Chrome-vanadium steel with medium high carbon content (SAE 6150) is used to make springs. Chrome-vanadium steel with high carbon content (SAE 6195) is used for ball and roller bearings.

2-12. CHROME - MOLYBDENUM STEELS. Molybdenum in small percentage is used in combination with chromium to form chrome-molybdenum steel; this steel has important applications in aircraft. Molybdenum is a strong alloying element, only 0.15 to 0.25percent being used in the chrome-molybdenum steels; the chromium content varies from 0.80 to 1.10 percent. Molybdenum is very similiar to tungsten in its effect on steel. In some instances it is used to replace tungsten in cutting tools, however; the heat treat characteristic varies. The addition of up to 1% molybdenum gives steel a higher tensile strength and elastic limit with only a slight reduction in ductility. They are especially adaptable for welding and for this reason are used principally for welded structural parts and assemblies. Parts fabricated from 4130, are used extensively in the construction of aircraft, missiles, and miscellaneous GSE equipment. The 4130 alloy is used for parts such as engine mounts (reciprocating), nuts, bolts, gear structures, support brackets for accessories, etc.

2-13. PRINCIPLES OF HEAT TREATMENT OF STEELS.

2-14. HARDENING. At ordinary temperatures, the carbon content of steel exists in the form of particles of iron carbide scattered throughout the iron matrix; the nature of these carbide particles, i.e., their number, size, and distribution, determines the hardness and strength of the steel. At elevated temperatures, the carbon is dissolved in the iron matrix and the carbide-particles appear only after the steel has cooled through its "critical temperature" (see paragraph 2-15). If the rate of cooling is slow, the carbide particles are relatively coarse and few; in this condition the steel is soft. If the cooling is rapid, as be quenching in oil or water, the carbon precipitates as a cloud of very fine carbide particles, which condition is associated with high hardness of the steel.

2-15. At elevated temperatures, the iron matrix exists in a form called "austenite" which is capable of dissolving carbon in solid solution. At ordinary temperatures the iron exists as "ferrite", in which carbon is relatively insoluble and precipitates; as described in the preceding paragraph, in the form of carbide particles. The temperature at which this change from austenite to ferrite begins to occur on cooling is called the "upper critical temperature" of the steel, and varies with the carbon content; up to approximately 0.85 percent carbon, the upper critical temperature is lowered with increasing carbon content; from 0.85 to 1.70 percent carbon the upper critical temperature is raised with increasing carbon content. Steel that has been heated to its upper critical point will harden completely if rapidly quenched; however, in practice it is necessary to exceed this temperature by/from approximately 28° to 56°C (50° to 100°F) to insure thorough heating of the inside of the piece. If the upper critical temperature is exceeded too much, an unsatisfactory coarse grain size will be developed in the hardened steel.

2-16. Successful hardening of steel will largely depend upon the following factors after steel has been selected which has harden ability desires:

a. Control over the rate of heating, specifically to prevent cracking of thick and irregular sections.

b. Thorough and uniform heating through sections to the correct hardening temperatures.

c. Control of furnace atmosphere, in the case of certain steel parts, to prevent scaling and decarburization.

d. Correct heat capacity, viscosity, and temperature of quenching medium to harden adequately and to avoid cracks.

e. In addition to the preceding factors, the thickness of the section controls the depth of hardness for a given steel composition. Very thick sections may not harden through because of the low rate of cooling at the center.

2-17. When heating steel, the temperature should be determined by the use of accurate instruments. At times, however, such instruments are not available, and in such cases, the temperature of the steel may be judged approximately by its color. The accuracy with which temperatures

may be judged by color depends on the experience of the workman, the light in which the work is being done, the character of the scale on the steel, the amount of radiated light within the furnace, and the emissivity or tendency of steel to radiate or emit light.

2-18. A number of liquids may be used for quenching steel. Both the medium and the form of the bath depend largely on the nature of the work to be cooled. It is important that a sufficient quantity of the medium be provided to allow the metal to be quenched without causing an appreciable change in the temperature of the bath. This is particularly important where many articles are to be quenched in succession.

NOTE

Aerators may be used in the Quench Tanks to help dissipate the vapor barrier.

2-19. QUENCHING PROCEDURE. The tendency of steel to warp and crack during the quenching process is difficult to overcome, and is due to the fact that certain parts of the article cool more rapidly than others. Whenever the rate of cooling is not uniform, internal stresses are set up on the metal which may result in warpage or cracking, depending on the severity of the stresses. Irregularly shaped parts are particularly susceptible to these conditions although parts of uniform section size are often affected in a similar manner. Operations such as forging and machining may set up internal stresses in steel parts and it is therefore advisable to normalize articles before attempting the hardening process. The following recommendations will greatly reduce the warping tendency and should be carefully observed:

a. An article should never be thrown into quenching media/bath. By permitting it to lie on the bottom of the bath it is apt to cool faster on the top side than on the bottom side, thus causing it to warp or crack.

b. The article should be slightly agitated in the bath to destroy the coating of vapor which might prevent it from cooling rapidly. This allows the bath to remove the heat of the article rapidly by conduction and convection.

c. An article should be quenched in such a manner that all parts will be cooled uniformly and with the least possible distortion. For example, a gear wheel or shaft should be quenched in a verticle position.

d. Irregularly shaped sections should be immersed in such a manner that the parts of the greatest section thickness enters the bath first.

2-20. QUENCHING MEDIUM.

2-21. Oil is much slower in action than water, and the tendency of heated steel to warp or crack when quenched may be greatly reduced by its use. Unfortunately, parts made from high carbon steel will not develop maximum hardness when quenched in oil unless they are quite thin in cross section. In aircraft, however, it is generally used and is recommended in all cases where it will produce the desired degree of hardness.

NOTE

Alloy steels should never be quenched in water.

2-22. In certain cases water is used in the quenching of steel for the hardening process. The water bath should be approximately 18°C (65°F), as extremely cold water is apt to warp or crack the steel and water above this temperature will not produce the required hardness.

2-23. A 10%, salt brine (sodium chloride) solution is used when higher cooling rates are desired. A 10% salt brine solution is made by dissolving 0.89 pound of salt per gallon of water.

2-24. For many articles such as milling cutters and similar tools, a bath of water covered by a film of oil is occasionally used. When the steel is plunged through this oil film a thin coating will adhere to it, retarding the cooling effect of the water slightly, thus reducing the tendency to crack due to contraction.

2-25. STRAIGHTENING OF PARTS WARPED IN QUENCHING. Warped parts must be straightened by first heating to below the tempering temperature of the article, and then applying pressure. This pressure should be continued until the piece is cooled. It is desirable to retemper the part after straightening at the straightening temperature. No attempt should be made to straighten hardened steel without heating, regardless of the number of times it has been previously heated, as steel in its hardened condition cannot be bent or sprung cold with any degree of safety.

2-26. TEMPERING (DRAWING). Steel that has been hardened by rapid cooling from a point slightly above its critical range is often harder than necessary and generally too brittle for most purposes. In addition, it is under severe internal stress. In order to relieve the stresses and reduce the brittleness or restore ductility the metal is always "tempered". Tempering consists in reheating the steel to a temperature below the critical range (usually in the neighborhood of 600 - 1200°F). This reheating causes a coalescence and enlargement of the fine carbide particles produced

by drastic quenching, and thus tends to soften the steel. The desired strength wanted will determine the tempering temperature. This is accomplished in the same types of furnaces as are used for hardening and annealing. Less refined methods are sometimes used for tempering small tools.

2-27. As in the case of hardening, tempering temperatures may be approximately determined by color. These colors appear only on the surface and are due to a thin film of oxide which forms on the metal after the temperature reaches 232°C (450°F). In order to see the tempering colors, the surface must be brightened. A buff stick consisting of a piece of wood with emery cloth attached is ordinarily used for this purpose. When tempering by the color method, an open flame of heated iron plate is ordinarily used as the heating medium. Although the color method is convenient, it should not be used unless adequate facilities for determining temperature are not obtainable. Tempering temperatures can also be determined by the use of crayons of known melting point. Such crayons are commercially available for a wide range of temperatures under the trade name of "Tempilstiks". The above method may be used where exact properties after tempering is not too important such as for blacksmith work. The most desireable method for general aeronautical use, is to determine temperatures by hardness checks, and subsequent adjustments made as necessary to obtain the properties required. For recommended tempering temperatures see heat treat data for material/composition involved.

2-28. Steel is usually subjected to the annealing process for the following purposes:

a. To increase its ductility by reducing hardness and brittleness.

b. To refine the crystalline structure and remove stresses. Steel which has been cold-worked is usually annealed so as to increase its ductility. However, a large amount of cold-drawn wire is used in its cold-worked state when very high yield point and tensile strength are desired and relatively low ductility is permissible, as in spring wire, piano wire, and wires for rope and cable. Heating to low temperatures, as in soldering, will destroy these properties. However, rapid heating will narrow the affected area.

c. To soften the material so that machining, forming, etc., can be performed.

2-29. NORMALIZING. Although involving a slightly different heat treatment, normalizing may be classed as a form of annealing. This process also removes stresses due to machining, forging, bending, and welding. Normalizing may be accomplished in furnaces used for annealing. The articles are put in the furnace and heated to a point approximately 150° to 225°F above the critical temperature of the steel. After the parts have been held at this temperature for a sufficient time for the parts to be heated uniformly throughout, they must be removed from the furnace and cooled in still air. Prolonged soaking of the metal at high temperatures must be avoided, as this practice will cause the grain structure to enlarge. The length of time required for the soaking temperature will depend upon the mass of metal being treated. The optimum soaking time is roughly one-quarter hour per inch of diameter or thickness.

2-30. CASE HARDENING. In many instances it is desirable to produce a hard, wear-resistant surface or "case" over a strong, tough core. Treatment of this kind is known as "case hardening". This treatment may be accomplished in several ways, the principal ways being carburizing, cyaniding, and nitriding.

2-31. Flame Hardening/Softening. Surface hardening/softening by applying intense heat (such as that produced by an Oxy-Acetylene flame) can be accomplished on almost any of the medium carbon or alloys steel, i.e. 1040, 1045, 1137, 1140 etc. The parts are surface hardened, by applying a reducing flame (An Oxidizing flame should never be used) at such a rate, that the surface is rapidly heated to the proper quenching temperature for the steel being treated. Following the application of the heat, the part is quenched by a spraying of water/oil rapidly. The fast quench hardens the steel to the depth that the hardening temperature has penetrated below the surface. The actual hardness resulting will depend on the rate of cooling from the quenching temperature. In hardening by this method the shape and size/mass of the part must be considered. Most operations will require special adapted spray nozzles to apply the quenching media, which is usually water. Normally, flame hardening will produce surface hardness higher than can be obtained by routine furnace heating and quenching, because surface can be cooled at a faster rate. If a combination of high strength core and surface is required some of the medium carbon alloy steels can be heat treated and subsequently surface hardened by the flame method.

NOTE

This method is not adapted for surface hardening of parts for use in critical applications.

2-32. Surface softening is accomplished by heating the surface to just below the temperature

required for hardening and allowing the material to cool (in air) naturally. This method is sometimes used to soften material that has been hardened by frame cutting. Often it is necessary to apply the heat in short intervals to prevent exceeding the hardening temperature.

2-33. Induction. Hardening/Heating. The induction method of heating can be used to surface harden steels, in a manner similar to that used for flame hardening. The exception is that the heat for hardening is produced by placing the part in a magnetic field (electrical) specifically designed for the purpose. Parts hardened (surface) by this method will be limited to capability and size of loop/coil used to produce the magnetic field.

2-34. In some instances the induction method can be used to deep harden; the extent will depend on exposure/dwell time, intensity of the magnetic field, and the size of the part to be treated.

2-35. CARBURIZING. At elevated temperatures iron can react with gaseous carbon compounds to form iron carbide. By heating steel, while in contact with a carbon-aceous substance, carbonic gases given off by this material will penetrate the steel to an amount proportional to the time and temperature. For example, if mild or soft steel is heated to 732°C (1,350°F) in an atmosphere of carbonic gases, it will absorb carbon from the gas until a carbon content of approximately 0.80 percent has been attained at the surface, this being the saturation point of the steel for the particular temperature. By increasing the heat to 899°C/(1,650°F) the same steel will absorb carbon from the gas until a carbon content of approximately 1.1 percent has been attained, which is the saturation point for the increased temperature.

2-36. The carburizing process may be applied to both plain carbon and alloy steels provided they are within the low carbon range. Specifically, the carburizing steels are those containing not more than 0.20 percent carbon. The lower the carbon content in the steel, the more readily it will absorb, carbon during the carburizing process.

2-37. The amount of carbon absorbed and the thickness of the case obtained increases with time; however, the carburization progresses more slowly as the carbon content increases during the process. The length of time required to produce the desired degree of carburization material used and the temperature to which the metal is subjected. It is apparent that, in carburizing, carbon travels slowly from the outside toward the inside center, and therefore, the proportion of carbon absorbed must decrease from the outside to the inside.

2-38. Solid, liquid, and gas carburizing methods are employed.

a. The simplest method of carburizing consists of soaking the parts at an elevated temperature while in contact with solid carbonaceous material such as wood charcoal, bone charcoal and charred leather.

b. Liquid carburizing consists of immersing the parts in a liquid salt bath, heated to the proper temperature. The carbon penetrates the steel as in the solid method producing the desired case.

c. Gas carburizing consists of heating the parts in a retort and subjecting them to a carbonaceous gas such as carbon monoxide or the common fuel gases. This process is particularly adaptable to certain engine parts.

2-39. When pack carburizing, the parts are packed with the carburizing material in a vented steel container to prevent the solid carburizing compound from burning and to retain the carbon monoxide and dioxide gases. Nichrome boxes, capped pipes of mild steel, or welded mild steel boxes may be used. Nichrome boxes are most economical for production because they withstand oxidation. Capped pipes of mild steel or welded mild steel boxes are useful only as substitutes. The container should be so placed as to allow the heat to circulate entirely around it. The furnace must be brought to the carburizing temperature as quickly as possible and held at this heat from 1 to 16 hours, depending upon the depth of case desired and the size of the work. After carburizing, the container should be removed and allowed to cool in air or the parts removed from the carburizing compound and quenched in oil or water. The air cooling, although slow, reduces warpage and is advisable in many cases.

2-40. Carburized steel parts are rarely used without subsequent heat treatment, which consists of several steps to obtain optimum hardness in the case, and optimum strength and ductility in the core. Grain size of the core and case is refined.

a. Refining the core is accomplished by reheating the parts to a point just above the critical temperature of the steel. After soaking for a sufficient time to insure uniform heating, the parts are quenched in oil.

b. The hardening temperature for the high carbon case is well below that of the core. It is, therefore, necessary to heat the parts again to the critical temperature of the case and quench them in oil to produce the required hardness. A soaking period of 10 minutes is generally sufficient.

c. A final stress relieving operation is necessary to minimize the hardening stresses produced by the previous treatment. The stress relieving temperature is generally around 350°F. This is accomplished by heating, soaking until uniformly heated, and cooling in still air. When extreme hardness is desired, the temperature should be carefully held to the lower limit of the range.

2-41. CYANIDING. Steel parts may be surface-hardened by heating while in contact with a cyanid salt, followed by quenching. Only a thin case is obtained by this method and it is, therefore, seldom used in connection with aircraft construction or repair. Cyaniding is, however, a rapid and economical method of case hardening, and may be used in some instances for relatively unimportant parts. The work to be hardened is immersed in a bath of molten sodium or potassium cyanide from 30 to 60 minutes. The cyanide bath should be maintained at a temperature to 760°C to 899°C (1,400°F to 1,650°F). Immediately after removal from the bath, the parts are quenched in water. The case obtained in this manner is due principally to the formation of carbides and nitrides on the surface of the steel. The use of a closed pot and ventilating hood are required for cyaniding, as cyanide vapors are extremely poisonous.

2-42. NITRIDING. This method of case hardening is advantageous due to the fact that a harder case is obtained than by carburizing. Many engine parts such as cylinder barrels and gears may be treated in this way. Nitriding is generally applied to certain special steel alloys, one of the essential constituents of which is aluminum. The process involves the exposing of the parts to ammonia gas or other nitrogenous materials for 20 to 100 hours at 950°F. The container in which the work and ammonia gas are brought in contact must be airtight and capable of maintaining good circulation and even temperature throughout. The depth of case obtained by nitriding is about 0.015 inch if heated for 50 hours. The nitriding process does not affect the physical state of the core if the preceding tempering temperature was 950°F or over. When a part is to be only partially treated, tinning of any surface will prevent it from being nitrided. Nitrided surfaces can be reheated to 950°F with out losing any of their hardness, however, if heated above that temperature, the hardness is rapidly lost and cannot be regained by retreatment. Prior to any nitriding treatment, all decarburized metal must be removed to prevent flaking of the nitrided case. When no distortion is permissible in the nitrided part, it is necessary to normalize the steel prior to nitriding to remove all strains resulting from the forging, quenching, or machining.

2-43. HEAT TREATING EQUIPMENT. Equipment necessary for heat treating consists of a suitable means for bringing the metal to the required temperature measuring and controlling device and quenching medium. Heat may, in some instances, be supplied by means of a forge or welding torch; however, for the treatment required in aircraft work, a furnace is necessary. Various jigs and fixtures are sometimes needed for controlling quenching and preventing warping.

2-44. FURNACES. Heat treating furnaces are of many designs and no one size or type perfectly fills every heat treating requirement. The size and quantity of metal to be treated and the various treatments required determine the size and type of furnace most suitable for each individual case. The furnace should be of a suitable type and design for the purpose intended and should be capable of maintaining within the working zone a temperature varying not more than + or - 14°C (25°F) for the desired value.

2-45. HEAT TREATING FURNACES/BATHS.

2-46. The acceptable heating media for heat treating of steels are air, combusted gases, protective atmosphere, inert atmosphere or vacuum furnaces, molten-fused salt baths, and molten-lead baths. The heat treating furnaces/baths are of many designs and no one size or type will perfectly fill every heat treating requirement. Furnaces and baths shall be of suitable design, type and construction for purpose intended. Protective and inert atmospheres shall be utilized and circulated as necessary to protect all surfaces of parts comprising the furnace load.

2-47. The design and construction of the heating equipment shall be such that the furnace/bath is capable of maintaining within the working zone, at any point, a temperature varying not more than ±25°F (±14°C) from the required heat treating temperature, with any charge. After the charge has been brought up to treating/soaking temperature all areas of the working zone shall be within the permissible temperature range specified for the steel/alloy being heat treated (See Table 2-3, MIL-H-6875 or engineering data for material involved).

NOTE

Specification SAE-AMS-H-6875, Heat Treatment of Steel, will be the control document for heat treating steel material to be used on aerospace equipment. Where new alloys are involved, it will be necessary to review the involved specification or manufacturer's engineering or design data for the appropriate heat information (temperature, control, atmosphere, times, etc). In case of conflict the Military/Federal Specification will be governing factor or the conflict will be negotiated with the responsible technical/engineering activities for resolution.

2-48. HEAT CONTROL, FURNACE TEMPERATURES SURVEY AND TEMPERATURE MEASURING EQUIPMENT.

2-49. Furnaces/baths shall be equipped with suitable automatic temperature control devices, properly calibrated and arranged, preferably of the potentiometer type to assure adequate control of temperature in all heat-treating zones. The resulting temperature readings shall be within ±1.0 percent of the temperature indications of the calibrating equipment. Thermocouples shall be properly located in the working zones and adequately protected from contamination by furnace atmospheres by means of suitable protecting tubes.

2-50. A survey shall be made before placing any new furnace in operation, after any change is made that may affect operational characteristics, and semi-annually thereafter to assure conformance with temperature and control requirement previously cited. Where furnaces are used only for annealing or stress relieving, an annual survey will be acceptable. The survey may be waived at the discretion of the authorized inspector or representative provided that the results from previous tests, with the same furnace or bath and same type of load, show that the temperature and control uniformity is within specified limits. As a part of the inspection thermocouples should be closely inspected for condition and those severely deteriorated and of doubtful condition should be replaced.

2-51. The initial and succeeding (semi-annual and annual) surveys shall be performed with a standard production type atmosphere, controlled if required. A minimum of 9 test thermocouples or 1 per 15 cubic feet, whichever is greater, shall be used for air furnaces except circulating air furnaces used for tempering only. In the tempering furnaces, a minimum of 9 test thermocouples or 1 per 25 cubic feet, whichever is greater, shall be used. Bath furnaces shall be tested by use of a minimum of 5 test locations or 1 per each 15 cubic feet. The locations may be surveys, using suitable protected multiple or single brake test thermocouples. For distribution of test thermocouples, see Figure 2-1. Temperature measuring and recording instruments used for controlling the furnace shall not be used to read the temperature of the test temperature sensing elements.

2-52. For all surveys, the furnace or bath temperature shall be allowed to stabilize at the potential test temperature. The initial survey shall be made at the highest and lowest temperatures of the furnace specified operating range. Periodic surveys may be made at a convenient temperature within the operating range. The temperature of all test locations/thermocouples shall be recorded at 5 minute intervals, starting immediately after insertion of the test thermocouples in the furnace or bath. Reading shall be continued for 1/2-hour or more after furnace control thermocouple reads within 25°F of original setting. After all the test thermocouples have reached the minimum of the heat treating range, their maximum variation shall not exceed ±25°F (14°C) and shall be within the specified heat treating temperature range in accordance with Specification SAE-AMS-H-6875 or Table 2-3. If the test indicates that conditions are not satisfactory, the required changes shall be made in the furnace and arrangements of the charge. The furnace control couples shall be corrected for any deviation from the standard electromative force (EMF) temperature chart as determined in calibration of the couples.

2-53. FURNACE CONTROL INSTRUMENTS ACCURACY.

2-54. The accuracy of temperature measuring, recording and controlling instruments shall be checked at regular intervals, not exceeding 3 months or upon request of personnel in charge or authorized (Government) inspector or representatives. The accuracy of the instrument shall be made by comparison tests with a standardized precision potentiometer type instrument of known (tested) accuracy used with a calibrated thermocouple. The test thermocouple shall be located approximately 3 inches from the installed furnace thermocouple(s). The temperature for check shall be at working temperature with a production load. If instruments are replaced or not used for 3 months they shall be checked before use.

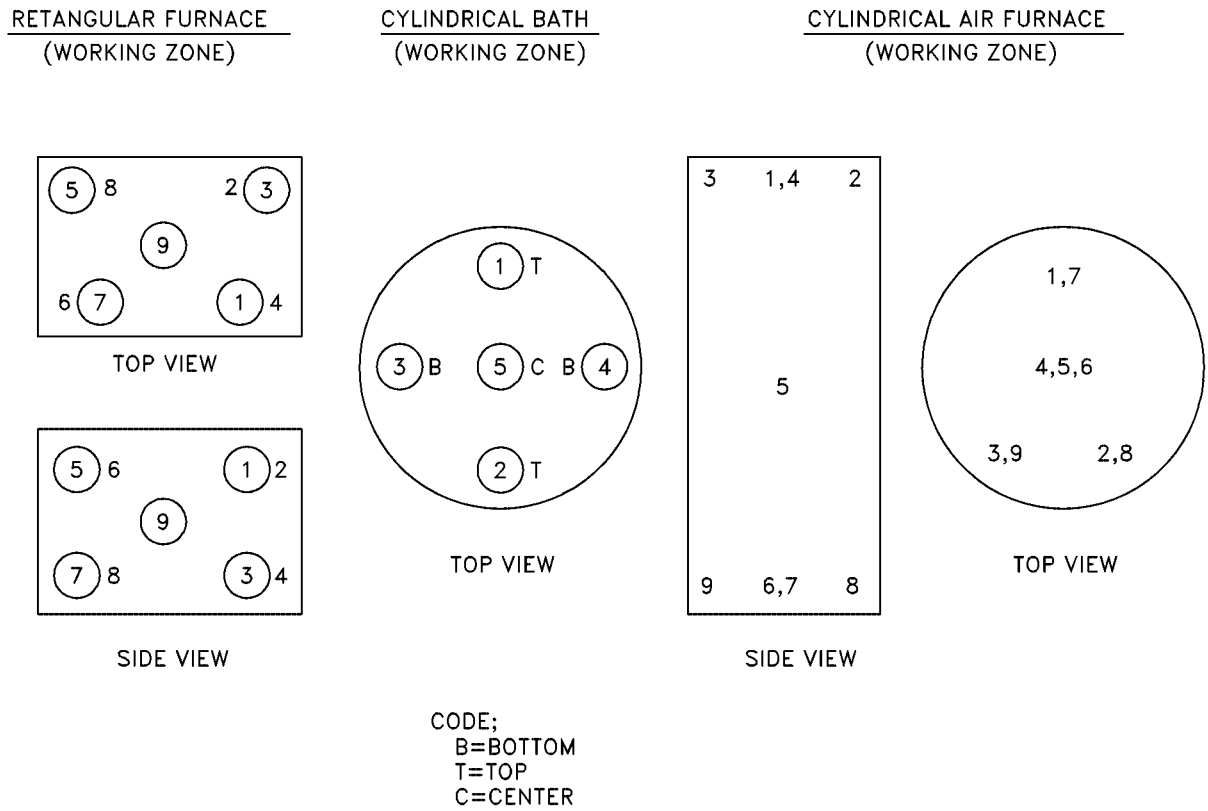

ONLY CIRCLED TEST LOCATIONS ARE REQUIRED FOR BATH–TYPE FURNACES LESS THAN 75 CUBIC FEET.

WHEN VOLUME REQUIRES ADDITIONAL TEST LOCATIONS, THEY SHALL BE SYMMETRICALLY DISTRIBUTED WITHIN THE WORKING ZONE.

L9805646

Figure 2-1. Number and Distribution of Thermocouples

2-55. SALT BATH CONTROL.

2-56. The bath composition shall be adjusted as frequently as necessary to prevent objectionable attachment of the steel or alloy to be treated and to permit attainment of the desired mechanical properties of the finished product. The bath will be checked at least once a month.

2-57. Temperature recording should be of the automatic controlling and recording type, preferably the potentiometer type. Thermocouples should be placed in a suitable protecting tube, unless the furnace atmosphere is such that undue deterioration of the thermocouples will not result.

2-58. QUENCHING TANKS AND LIQUIDS. Suitable tanks must be provided for quenching baths. The size of tanks should be sufficiently large to allow the liquids to remain approximately at room temperature. Circulating pumps and coolers may be used for maintaining approximately constant temperatures where a large amount of quenching is done. The location of these tanks is very important due to the fact that insufficiently rapid transfer from the furnace to the quenching medium may destroy the effects of the heat treatment in many instances.

2-59. The quenching liquids commonly used are as follows: Water at 18°C (65°F), Commercial Quenching Oil, and Fish Oil.

2-60. HEAT TREATING PROCEDURES.

NOTE

Additional Heat Treatment information is discussed in Section IX.

2-61. INITIAL FURNACE TEMPERATURES. In normalizing, annealing and hardening where parts are not preheated, the temperature in that zone of the furnace where works is introduced should be at least 149°C (300°F) below the working temperature at the time of insertion of parts of simple design. For parts of complicated design involving abrupt change of section or sharp corners, the temperature should be at least 260°C (500°F) below the working temperature. The furnace must be brought to the proper temperature gradually.

2-62. SOAKING PERIODS. The period of soaking is governed by both the size of the section and the nature of the steel. Table 2-1 indicates in a general way the effect of size on the time for soaking. This table is intended to be used as a guide only and should not be construed as being a mandatory requirement. It applies only to plain carbon and low alloy steels.

Table 2-1. Soaking Periods for Hardening Normalizing and Annealing (Plain Carbon Steel)

DIAMETER OR THICKNESS	TIME OF HEATING TO REQUIRED TEMPERATURE (APPROX)	TIME OF HOLDING (APPROX)
INCHES	HOURS	HOURS
1 and less	3/4	1/2
Over 1 through 2	1 1/4	1/2
Over 2 through 3	1 3/4	3/4
Over 3 through 4	2 1/4	1
Over 4 through 5	2 3/4	1
Over 5 through 8	3 1/2	1 1/2

2-63. HARDENING. Temperatures required for hardening steel are governed by the chemical composition of the steel, previous treatment, handling equipment, size and shape of piece to be treated. Generally, parts of heavy cross section should be hardened from the high side of the given temperature range.

2-64. TEMPERING (DRAWING.) Tempering consists of heating the hardened steel to the applicable temperature holding at this temperature for approximately 1 hour per inch of the thickness of the largest section, and cooling in air or quenching in oil at approximately 27° to 66°C (80° to 150°F). The temperature to be used for tempering of steel depends upon the exact chemical composition, hardness, and grain structure obtained by hardening and the method of tempering. The tempering temperatures given are only approximate, and the exact temperature should be determined by hardness or tension test for individual pieces. The final tempering temperatures should not be more than 111°C (200°F) below the tempering, temperature given. If the center of the section is more that 1/2-inch from the surface, the tensile strength at the center will in general be reduced; therefore, a lower tempering temperature should be used for sections thicker than 1 inch in order to obtain the required tensile strength.

2-65. ANNEALING. Annealing consists of heating to the applicable temperature, holding at this temperature for approximately the period of time given, and cooling in the furnace to a temperature not higher than 482°C (900°F). The steel

may then be removed from the furnace and cooled in still air.

2-66. NORMALIZING. Normalizing consists of heating the steel to the applicable temperature, holding at this temperature for period of time, removing from furnace and cooling in still air.

2-67. CARBURIZING. Carburizing consists of heating the steel packed in a carburizing medium, in a closed container, to the applicable temperature and holding at this temperature for the necessary period of time to obtain the desired depth of case. 1020 steel will require 1 to 3 hours at a carburizing temperature of 899°C (1650°F) for each 1/64 inch of case depth, required. Parts may be cooled in the box or furnace to a temperature of approximately 482°C (900°F) then air cool. This treatment leaves the alloy in a relatively soft condition and it is then necessary to condition by heating and quenching, first for core refinement, followed by heating and quenching for case hardness. Alloy may be quenched directly from the carburizing furnace, thus producing a hard case and a core hardness of Rockwell B67. This treatment produces a coarse grain in some types of steel and may cause excessive distortion. Usually there is less distortion in fine grain steels. The core treatment outlined above refines the grain as well as hardens.

2-68. HARDNESS TESTING.

2-69. GENERAL. Hardness testing is an important factor in the determination of the results of the heat treatment as well as the condition of the metal before heat treatment and must, therefore, be carefully considered in connection with this work. The methods of hardness testing in general use are: the Brinell, Rockwell, Vickers, and Shore Scleroscope. Each of these methods is discussed in section VIII.

2-70. TENSILE STRENGTH. Tempering temperatures listed with the individual steels in Table 2-3 are offered as a guide for obtaining desired tensile and yield strength of the entire cross section. When the physical properties are specified in terms of tensile strength, but tension tests are impractical, hardness tests may be employed using the equivalent hardness values specified in Table 8-3.

2-71. HARDNESS-TENSILE STRENGTH RELATIONSHIP. The approximate relationship between the tensile strength and hardness is indicated in Table 8-3. This table is to be used as a guide. It applied only to the plain carbon and low alloy steels not to corrosion-resistant, magnet, valve, or tool steels. When a narrow range of hardness is required, the tests to determine the relationship between hardness and strength should be made on the actual part. Hardness values should be within a range of two points Rockwell or 20 points Brinell or Vickers. The tensile strength-hardness relationship is quite uniform for parts which are sufficiently large and rigid to permit obtaining a full depression on a flat surface without deflection of the piece. For cylindrical parts of less than 1 inch in diameter, the Rockwell reading will be lower than indicated in the table for the corresponding tensile strength. Any process which affects the surface, such as buffing and plating, or the presence of decarburized or porous areas and hard spots, will affect the corresponding relation between hardness and tensile strength. Therefore, these surfaces must be adequately removed by grinding before measurements are made.

2-72. In making hardness measurements on tubular sections, correction factors must be determined and applied to the observed readings in order to compensate for the roundness and deflection of the tubing under the pressure of the penetrator. This may be impractical because every tube size end wall thickness would have a different factor. As an alternate, the following procedure may be used: Short lengths may be cut from the tube. A mandrel long enough to extend out both ends of the tube and slightly smaller in diameter than the inner diameter of the tube is then passed through the section and the ends supported in "V" supports on the hardness tester. Hardness readings may then be taken on the tubing.

2-73. SPECIFICATION CROSS REFERENCE. Table 2-2 is a cross reference index listing the steel and alloy types and the corresponding Federal, Military, and aeronautical material specifications for the different configurations. Where two or more specifications cover the same material, stock material meeting the requirements of a military specification shall be used for all aeronautical structural items. Some of the specifications listed in Table 2-2 are for reference only, and are not approved for Air Force use.

Table 2-2. Specification Cross Reference

COMP/ALLOY DESIGN	FORM/COMMODITY	AMS	FEDERAL	MILITARY
1005	Rod, welding steel and cast iron, rod and wire, steel welding (A/C application)	5030		MIL-R-908, C1 1
1008	Steel, sheet and strip, flat, aluminum coated low carbon, MIL-S-4174			MIL-S-4174
1010	Bars, Billets, Blooms, Slabs			MIL-S-16974
	Bars (General Purpose)		QQ-S-633	MIL-S-11310
	Wire		QQ-W-461	
	Sheet and Strip	5047	QQ-S-698	
	Sheet and Strip	5040		
	Sheet and Strip	5042	QQ-S-698	
	Sheet and Strip	5044	QQ-S-698	
	Tubing, Seamless	5050		
	Tubing, Welded	5053		
	Rivets	7225		
	Wire (Carbon)		QQ-W-409	
	Strip (For Small Arms, Bullets)			MIL-S-13468
	Blooms, Billets, Slabs			MIL-S-16788 C1 1
	Steel Disks (For Deep Drawn Ammunition items)			MIL-S-13852
	Tubes, Seamless (Marine Boiler application)			MIL-T-16286 C1 A
	Electrodes, Welding			MIL-E-6843 C1 E 6013
	Electrodes, Welding	5031		MIL-E-6843 C1 E 6013
	Electrodes, Welding			MIL-E-18193 ty 60
	Rod and Wire (Welding Low Carbon Steel)			MIL-R-5632 C1 1
1015, 1016, 1017, 1018 and 1019	Bar (General Purpose) Bar and Billets	5060	QQ-S-633 (Comp C1015-C1019)	
	Tube, Seamless/Welded		WW-T-731 Comp A	

Table 2-2. Specification Cross Reference - Continued

COMP/ALLOY DESIGN	FORM/COMMODITY	AMS	FEDERAL	MILITARY
1015, 1016, 1017, 1018 and 1019 (Continued)	Tube, Mechanical		QQ-T-830 MT1015	
	Steel - Carbon	5060	QQ-S-633 Comp C1015	
	Wire (Carbon)		QQ-W-409 (Comp 1015 1019	
	Wire (Carbon)		QQ-W-461	
	Tubing			MIL-T-3520
	Steel Disks			MIL-S-13852
	Plate, Sheet and Strip (See Corten)			MIL-S-7809
	Sheet and Strip, Bars, Billets		QQ-S-640	
	Blooms, Slabs			MIL-S-16974
1020	Bars, Billets, Blooms, Slabs			MIL-S-16974
	Bars		QQ-S-633	MIL-S-3090
	Sheet and Strip			MIL-S-7952
	Wire (Carbon)	5032	QQ-W-461	
	Wire			
	Wire (Book Binder)		QQ-W-414	
	Sheet and Strip	5045	QQ-S-698 1020	
	Plate (Carbon)		QQ-S-635	
	Wire (Carbon)		QQ-W-409	
	Tubing (Automotive)			MIL-T-3520
	Bars			MIL-S-11310
	Blooms, Billets, Slabs			MIL-S-16788 C1 2
	Tubing (Welded)			MIL-T-20162 Gr 1
	Tubing			MIL-T-20169
	Steel Disks (For deep drawn ammunition items)			MIL-S-13852
	Sheet and Strip			
	Tubing (Seamless and Welded)		QQ-T-830	

Table 2-2. Specification Cross Reference - Continued

COMP/ALLOY DESIGN	FORM/COMMODITY	AMS	FEDERAL	MILITARY
1022	Bars and Forgings	5070	QQ-S-633	MIL-S-11310
	Plates (Up to 1″)		QQ-S-691, C1 A	
	Wire (Carbon)		QQ-W-409	
	Steel Disk (For deep drawn ammunition items)			MIL-S-13852
	Bars, Billets, Blooms, Slabs			MIL-S-16974
	Sheet and Strip		QQ-S-640	
	Tubing		QQ-S-643	
	Tubing, Mechanical		QQ-T-830	
1025	Fittings			MIL-F-20236 ty 1
	Bars		QQ-S-633	
	Tubing			MIL-T-3520
	Tubing			MIL-T-5066
	Castings		QQ-S-681, C1 1	
	Castings		QQ-S-681, C1 2	
	Bars			MIL-S-11310
	Tubing, Seamless	5075		MIL-T-5066
	Tubing, Welded	5077		MIL-T-5066
	Wire		QQ-W-409	
	Casting			MIL-S-15083 C1 B
	Steel Disks			MIL-S-13852
	Sheet and Strip			MIL-S-7952
	Tubing		QQ-S-643	
	Plate			MIL-P-20167 C1 C
Corten	Plate, Sheet and Strip (High Str)			MIL-S-7809
NAX AC 9115	Sheet, Plate, Bar, Billet, Bloom, Strip	6354		
1035	Steel, Carbon (Bars, Forgings, and Tubings)	5080	QQ-S-633 (Bar)	
	Ingot			MIL-S-20145 Gr N
	Plate			MIL-P-20167 C1 A
	Bar		QQ-S-633	
	Wire (Carbon)		QQ-W-461	

Table 2-2. Specification Cross Reference - Continued

COMP/ALLOY DESIGN	FORM/COMMODITY	AMS	FEDERAL	MILITARY
1035 (Continued)	Tubes			MIL-T-20141
	Plate (Carbon)		QQ-S-635	
	Forgings			MIL-S-16900
	Tubes, Seamless	5082		
	Plate and Disk			MIL-S-3289
	Plates (Marine Boiler)		QQ-S-691 C1 B	
	Plates (Marine Boiler)		QQ-S-691 C1 C	
	Shapes, Bar and Plate (Structural)		QQ-S-741 Gr A	
	Wire		QQ-W-409	
	Sheet, Strip		QQ-S-640	
	Forgings (Naval Ship Board)			MIL-S-19434, C1 1
	Plates and Disks (For artillery ammunition cartridge cases)			MIL-S-3289
	Tubes			MIL-T-11823
1040	Bars		QQ-S-633	
	Plate (Carbon)		QQ-S-635	
	Castings		QQ-S-681, C1 1	
	Wire		QQ-W-409	
	Bars			MIL-S-11310
	Blooms, Billets, Bars and Slabs			MIL-S-16974
1045	Tubes (Welded)			MIL-T-4377
	Bars		QQ-S-633	
	Wire (Carbon)		QQ-W-461	
	Ingots			MIL-S-20145 Gr P
	Plate		QQ-S-635	
	Sheets, Strip, Tubes, Seamless		QQ-S-640	
	Strip			MIL-S-303
	Strip (For ammunition cartridge clips)			MIL-S-3039
1050	Bars		QQ-S-633	MIL-S-20137
	Plate (Carbon)		QQ-S-635	

Table 2-2. Specification Cross Reference - Continued

COMP/ALLOY DESIGN	FORM/COMMODITY	AMS	FEDERAL	MILITARY
1050 (Continued)	Blooms, Billets, and Slabs (For Forgings)			MIL-S-16788, C1 C5
	Bars, Billets, Blooms, Slabs, Castings	5085	QQ-S-681	
	Tubing, Seamless/ Welded		QQ-T-880	
1055	Ingots			MIL-S-20145 Gr R
	Forgings (For Shell Stock)			MIL-S-10520
	Bars		QQ-S-633	
	Electrodes			MIL-E-18193 (Ty 201)
1060	Bar		QQ-S-633	
	Bars, and Wire			MIL-S-16410 comp 3
	Wire, Springs,		QQ-W-428 Ty 1 and 2	
	Spring			MIL-S-2839
	Blooms, Billets, Slabs			MIL-S-16788, C1 C6
	Bars, Blooms, Billets, Slabs			MIL-S-16974
	Forgings			MIL-S-10520 comp 3
	Sheet, Strip		QQ-S-640	
1070-1075	Sheet, Strip			MIL-S-8143
	Wire, Spring	5115		
	Steel Tool		QQ-T-580	
	Washers	7240	FF-W-84 C1 A	
	Wire Bars		QQ-S-633	MIL-S-12504
	Steel, Strip (Spring-Time Fuse)			MIL-S-11713 comp 2
	Strip, Spring	5120 (1074)		
1080, 1086, 1090	Bars		QQ-S-633	
	Steel, Tool		QQ-T-580 C1-W1-09	
	Blooms, Billets, Slabs (For Forgings)			MIL-S-16788 C1 C8
	Wire, Drawn Metal (Stitching, (Galvanized)			MIL-W-6714

Table 2-2. Specification Cross Reference - Continued

COMP/ALLOY DESIGN	FORM/COMMODITY	AMS	FEDERAL	MILITARY
1080, 1086, 1090 (Continued)	Blooms, Billets, Bars, Slabs			MIL-S-16974
	Wire, Comm Quality	5110		
	Wire, Carbon Spring, Music	5112	QQ-W-470	
1095	Bars	5132	QQ-S-633	MIL-S-8559
	Bars, Wire			MIL-S- 16410 comp 1
	Wire, Spring		QQ-W-428	
	Sheet, Strip			MIL-S-11713 comp 3
	Wire (High Carbon)		QQ-W-470	
	Sheet, Strip	5121 Strip		MIL-S-7947 cond A
	Sheet, Strip	5122 Strip		MIL-S-7947 cond H
	Springs	7340		
	Wire, Spring (For small arms application)			MIL-W-13604
	Blooms, Billets, Slabs			MIL-S-16788
	Steel Bars, Round, Square and Flat for Forgings			MIL-S-46033
	Strip			MIL-S-17919
	Bars, Blooms, Billet and Slabs			MIL-S-16974
1112	Steel, Carbon, Bars Forging and Mechanical Tubing	5010		
	Bars	5010	QQ-S-633	
1117	Steel - Carbon, Bars, Forging and Mechanical Tubing	5022		
	Bars			MIL-S-16124, C1 1, comp A
	Bars	5022	QQ-S-633	
	Forgings			MIL-S-10520
1137	Steel - Carbon, Bars, Forging and Mechanical Tubing	5024		

Table 2-2. Specification Cross Reference - Continued

COMP/ALLOY DESIGN	FORM/COMMODITY	AMS	FEDERAL	MILITARY
1137 (Continued)	Bars	5024	QQ-S-633	MIL-S-43
	Bars			MIL-S-16124, C1 2
	Tubing, Seamless		QQ-S-643	
2317	Bars		QQ-S-624	
	Wire (Alloy)		QQ-W-405	
2330	Ingots			MIL-S-20145
	Bars		QQ-S-624	
	Wire (Alloy)		QQ-W-405	
	Tubing		QQ-S-629	
2340	Bars		QQ-S-624	
	Tubing		QQ-S-629	
	Wire (Alloy)		QQ-W-405	
	Ingots			MIL-S-20145 Gr V
2515	Bars		QQ-S-624	
	Wire (Alloy)		QQ-W-405	
3115	Bars		QQ-S-624	
	Wire (Alloy)		QQ-W-405	
	Bars, Billets (For carburizing)			MIL-S-866
3140	Bars		QQ-S-624	
	Wire (Alloy)		QQ-W-405	
	Bars, Blooms, Billets			MIL-S-16974
3310	Bars		QQ-S-624	MIL-S-7397 comp 1
	Wire		QQ-S-405	
3316	Bars			MIL-S-1393 comp 2
4037	Bars, Wire	6300		
	Bar		QQ-S-624	
	Wire		QQ-W-405	
4050	Steel, Tool		QQ-T-570 C1 1	
4130	Bars, Rods, Forgings (A/C Quality)	6370	QQ-S-624	MIL-S-6758

Table 2-2. Specification Cross Reference - Continued

COMP/ALLOY DESIGN	FORM/COMMODITY	AMS	FEDERAL	MILITARY
4130 (Continued)	Plate, Sheet Strip (A/C Quality)	6350 6351		MIL-S-18729
	Bars, Blooms, Billets and Slabs			MIL-S-16974
	Tubing, Seamless	6360 6361 6362		MIL-T-6736
	Tubing, Welded			MIL-S-6731
	Tubing, Mechanical	6371		
	Plate (Commercial Quality)		QQ-S-626	
	Sheet, Strips		QQ-S-627	
	Wire (Alloy)		QQ-W-405	
4135	Bars		QQ-S-624	
	Plate, Sheet, Strip			MIL-S-18733
	Tubing, Seamless	6365		MIL-T-6735 cond N
	Tubing, Seamless			MIL-T-6735
	Bars, Blooms			MIL-S-16974
	Tubing, Seamless	6372		
	Tubing			
17-22-A(V)	Bar, Forging, Forging Stock	6303		
4137C0 Mellon	- Alternate designation: Unimuch UCX2, MX - 2, Rocoloy. XMDR-2, Sheet, Steel.			Specification:
4140	Bars, Rods, Forgings, Plates (Commercial Grade)	6882	QQ-S-624 QQ-S-626	MIL-S-5626
	Tubing	6381		
	Bar, Blooms, Billets			MIL-S-16974
	Wire (Alloy)		QQ-W-405	
4150	Bar		QQ-S-624	
	Bar (For Small arms Weapons Barrels)			MIL-S-11595 MR
	Bar (Special Bar for AF Bullet Cores and Shot)			MIL-S-12504 MR

Table 2-2. Specification Cross Reference - Continued

COMP/ALLOY DESIGN	FORM/COMMODITY	AMS	FEDERAL	MILITARY
52100	Bars, Forgings	6440		MIL-S-7420
	Tubing, Mechanical	6441		
Ladish D-6-A - Alternate designation, D-6-A-V - and D-6-A-C.				
Nitralloy 135 Bar, Forging, Forging Stock (Nitriding)		6470 Bar and Forg-ings		MIL-S-6709, comp A
Alternate designations, Nitralloy Type G, Modified and ASTM-A355-57T C1 A				
Nitralloy 4330 Bars and Forgings Stock (Mod)				MIL-E-8699
Nitralloy 4337	Bars, Forging	6412-6475	QQ-S-624	
	Tubing, Seamless	6413		
	Wire (Alloy)		QQ-W-405	
	Ingot			MIL-S-20145 Gr U
4340	Plate, Sheet and Strip	6359		
	Bar, Forging and Tubing	6414		
	Bar, Forging and Tubing	6415		MIL-S-5000
	Bar, Reforging			MIL-S-8844 C1 1
	Bar		QQ-S-624	
	Bar, Forging and Tubing	6428		
	Strip and Sheet		QQ-S-627	
	Bar, Rod, Plate and Sheet			MIL-E-21515
	Wire (Alloy)		QQ-W-405	
	Bars, Blooms, Billets			MIL-S-16974
4335 (Mod)	Bars, Plates, Sheets and Strips			MIL-S-21515
HyTuf	Bar, Forging and Mechanical Tubing	6418		MIL-S-7108
4615	Bars		QQ-S-624	

Table 2-2. Specification Cross Reference - Continued

COMP/ALLOY DESIGN	FORM/COMMODITY	AMS	FEDERAL	MILITARY
4615 (Continued)	Wire		QQ-W-405	
	Bars, Billets			MIL-S-866
4617	Bars			MIL-S-7493
4620	Bars		QQ-S-624	MIL-S-7493
	Wire		QQ-W-405	
4640	Bars, Blooms, Billets			MIL-S-16974
	Bars	6312	QQ-S-624	
	Bars and Forgings	6317	QQ-S-624C Bars	
	Wire (Alloy)		QQ-W-405	
6150	Sheet, Strip			MIL-S-18731
	Bars		QQ-S-624	MIL-S-8503
	Bar			MIL-S-46033
	Bars, Forging	6448		MIL-S-8503
	Wire			
	Wire, Spring	6450	QQ-W-428 comp D	
	Bars, Wire (Spring)			MIL-S-16410 comp 4
	Ingots			MIL-S-20145 Gr Z
	Sheet, Strip (Springs)	6455		MIL-S-18731
	Springs (Highly Stressed)	7301		
	Sheet, Strip		QQ-S-627	
	Wire			MIL-W-22826
8615	Bars, Forgings, Tubing	6270	QQ-S-624 (Bar)	
	Wire (Alloy)		QQ-W-405	
	Bars, Billets			MIL-S-866
	Bars, Blooms, Billets and Slabs			MIL-S-16974
	Castings	5333 (8615 mod)		
8617	Bars, Forgings, Tubing Bars	6272	QQ-S-624 (Bar)	
	Bars		QQ-S-624	
	Sheet and Strip		QQ-S-627	

Table 2-2. Specification Cross Reference - Continued

COMP/ALLOY DESIGN	FORM/COMMODITY	AMS	FEDERAL	MILITARY
8617 (Continued)	Wire		QQ-W-405	
8620	Bars		QQ-S-624	
	Bars, Forgings, Tubing	6274		MIL-S-8690
	Plates (Commercial Grade)		QQ-S-626	
	Sheet and Strip		QQ-S-627	
	Wire		QQ-W-405	
	Bars, Blooms, Billets			MIL-S-16974
8630	Plate, Sheet, Strip (A/C Quality)			MIL-S-18728
	Tubing			MIL-T-6732
	Bars		QQ-S-624	
	Bars, Forgings	6280		MIL-S-6050
	Tubing	6281		
	Tubing, Seamless	6530		MIL-T-6732 cond N
	Tubing, Welded	6550		MIL-T-6734 cond N
	Sheet, Strip	6355		
	Bars, Blooms, Billets Slabs			MIL-S-16974
	Plate (Commercial Grade)		QQ-S-626	
	Wire (Alloy)		QQ-W-405	
	Sheet, Strip (Hot Rolled)		QQ-S-627	
	Bars, Rods, Forgings			MIL-S-6050
8640	Bars		QQ-S-624	
	Bars, Blooms, Billets Slabs			MIL-S-16974
	Plate		QQ-S-626	
	Tubing, Seamless			MIL-T-16690
	Tubing			
	Wire (Alloy)		QQ-W-405	
8735	Tubing, Seamless	6535		MIL-T-6733 cond N
	Tubing, (Mechanical)	6282		MIL-S-6098

Table 2-2. Specification Cross Reference - Continued

COMP/ALLOY DESIGN	FORM/COMMODITY	AMS	FEDERAL	MILITARY
8735 (Continued)	Tubing, rods, bars and forging stock (A/C quality)			MIL-S-6098
	Sheet, Strip and Plate	6357		MIL-S-18733
	Bars, Forgings	6320		MIL-S-6098
	Bars, Rods, Forgings			MIL-S-6098
8740	Bars, Forgings	6322		MIL-S-6049 cond C
	Bars		QQ-S-624	
	Bars, Forgings	6325 6327		MIL-S-6049
	Plate, Sheet and Strip	6358		
	Tubing, Mechanical	6323		
	Plate (Commercial)		QQ-S-626	
	Wire (Alloy)		QQ-W-405	
	Bars, Rods, Forgings			MIL-S-6049
9250	Bars, and Reforging Stock			MIL-S-8844 C1 2/3
9620	Bars		QQ-S-624	
	Bar			MIL-S-46033
	Wire, Spring		QQ-W-474, comp E	
	Bars, Wire (Spring)			MIL-S-16410, comp 5
	Steel, Strip			MIL-S-17919, C1 6
9262	Wire, Spring		QQ-W-428	
	Bar			MIL-S-46033
	Bars		QQ-S-624	
	Sheet and Strip		QQ-S-627	
9310	Bars, Forgings, Tubings	6260	QQ-S-624 (Bar)	
	Bar, Forgings and Tubing	6265		
	Wire (Alloy)		QQ-W-405	
9315	Bars	6263		
Type 301 (30301)	Casting Prec Invest (S±)	5358		
	Sheet, Strip, Plate (ST)	5515		MIL-S-5059

Table 2-2. Specification Cross Reference - Continued

COMP/ALLOY DESIGN	FORM/COMMODITY	AMS	FEDERAL	MILITARY
Type 301 (30301) (Continued)	Sheet, Strip, Plate (1/4 H)	5517		MIL-S-5059
	Sheet, Strip, Plate (1/2 H)	5518		MIL-S-5059
	Sheet, Strip, Plate (Full H)	5519		MIL-S-5059
	Plate, Sheet, Strip Shape		QQ-S-766	
	Wire, (Spring Temper)	5688	QQ-W-423 comp 502	
302 (30302)	Bars (CD to 100000 tensile)	5636	QQ-S-763 CL 303	
	Bars (CD to 125000 tensile)	5637	QQ-S-763 C1 302	
	Bars, Forgings		QQ-S-763, C1 1	
	Sheet, Strip	5516		MIL-S-5059 comp 302
	Plate, Sheet, Strip			MIL-S-5059
	Pins, Cotter	7210	FF-P-386 Type C	
	Rivets (18CR 8N:)	7228		
	Steel, Stainless, Bar and Billets (Reforging Applications)			MIL-S-862 C1 302
	Bars, Forgings			MIL-S-7720
(60302)	Steel, Castings	5358		
	Wire, Annealed		QQ-W-423	
	Castings			MIL-S-17509, C1 1
	Plate, Sheet, Strip		QQ-S-682	
	Plate, Sheet, Strip		QQ-S-766	
	Wire			MIL-W-17481
	Lockwashers, Helical	7241	FF-W-84 C1 C	
303	Bar, Forging	5640	QQ-S-763	
	Bar	5738		
	Bar, Billets, Reforging			MIL-S-862
	Bars, Forgings			MIL-S-7720
	Bar, Forging (Swaging)	5641		
	Bar, Forging	5642		

Table 2-2. Specification Cross Reference - Continued

COMP/ALLOY DESIGN	FORM/COMMODITY	AMS	FEDERAL	MILITARY
304	Tubing	5566		MIL-T-6845
	Tubing	5567		MIL-T-8504
	Castings			MIL-S-867 C1 1
	Plate, Sheet, Strip			MIL-S-4043
	Plate			MIL-F-20138
	Plate, Sheet, Strip		QQ-S-766	
	Castings, Precision Invest	5370		
	Castings, Sand	5371		
	Wire	5697	QQ-W-423	
	Bars, Forgings, Mechanical Tubing	5647		
	Bar		QQ-S-763	
	Plate, Sheet, Strip	5511		MIL-S-4043
	Tubing, Bar, Forging	5639	QQ-S-763	MIL-S-7720
	Wire	5697	QQ-W-423	
	Tubing			MIL-T-5695
	Bars, Forgings		QQ-S-763	
	Tubing, Seamless	5560		MIL-T-8506
	Tubing, Welded	5565		MIL-S-8506
314	Bar, Forging, Mechanical Tubing and Rings	5652		
	Sheet, Strip, Plate	5522		
316	Casting, Investment	5360		
	Casting, Sand, Centrifugal	5361		MIL-S-867 (C1 III)
	Sheet, Strip, Plate	5524	QQ-S-766	MIL-S-5059 comp 316
	Tubing, Seamless	5573		
	Bar, Forging, Tubing	5648	QQ-S-763	MIL-S-7720 comp MCR
	Wire, Screen	5698		
	Wire		QQ-W-423	
	Electrode, Coated, Welded	5691		
	Bar, Forging (Free Machining)	5649		

Table 2-2. Specification Cross Reference - Continued

COMP/ALLOY DESIGN	FORM/COMMODITY	AMS	FEDERAL	MILITARY
316 (Continued)	Wire		QQ-W-423	
	Pipe, Seamless and Welded			MIL-P-1144
	Bar, Billets, Reforgings			MIL-S-862
321	Bar, Forgings, Tubing Mechanical	5645	QQ-S-763 C1 321	
	Plate, Sheet, Strip	5510		MIL-S-6721, comp T1
	Plate, Sheet, Strip		QQ-S-766	
	Tubing, Seamless	5570		MIL-T-8606 T1, G321
	Tubing, Welded, Thin Wall			MIL-T-8887
	Tubing, Welded	5576		MIL-T-6737, T 321
	Tubing, Flexible			MIL-T-7880
	Wire, Screen	5689		
	Pins, Cotter	7211		
	Tubing, Hydraulic	5557		
	Tubing, Welded			MIL-T-6737
	Bar, Forgings		QQ-S-763	
	Tubing			MIL-T-8606
	Plate, Sheet, Strip		QQ-S-682	
	Tubing, Hydraulic			MIL-T-8808
	Tubing, Welded, Thin Wall	5559		
347	Tube		MIL-T-8606	
	Rivets	7229		
	Bars, Forgings, Tubing	5646	QQ-S-763 C1 347	
	Castings			MIL-S-867 C1 II
	Sheet, Strip	5512		MIL-S-6721 Type CB + TA) (CB)
	Casting, Sand	5363		
	Casting			MIL-S-17609 C1 II
	Tubing, Seamless	5571		MIL-T-8606, Type 1, G347
	Tubing, Seamless, Welded Drawn			MIL-T-8606

Table 2-2. Specification Cross Reference - Continued

COMP/ALLOY DESIGN	FORM/COMMODITY	AMS	FEDERAL	MILITARY
347 (Continued)	Tubing, Welded	5575		MIL-T-6737, Type 347
	Tubing, Flexible			MIL-T-7880
	Tubing, Hydraulic	5556		
	Tubing, Welded	5558		
	Plate, Sheet, Strip		QQ-S-682	
	Tubing, Welded			MIL-T-6737
	Bars, Forgings		QQ-S-763	
	Plate, Sheet, Strip			MIL-S-6721
	Castings			MIL-S-17509, C1 2
	Rods, Welding			MIL-R-5031
	Plate, Sheet, Strip		QQ-S-766	
	Tubes, Seamless (Marine Boiler Application)			MIL-T-16286
	Tubes, Hydraulic			MIL-T-8808
	Casting, sand and Centrif	5362		
410 (51410)	Bars, Forgings, Mechanical Tubing	5613	QQ-S-763 C1 410	
	Bars, Forgings, Mechanical Tubing (Ferrite Controlled Modified)	5612		
410-MO	Bars and Forgings	5614		
410-MOD	Bars and Forgings, Mechanical Tubing	5609		
410	Plate, Sheet and Strip	5504	QQ-S-766 C1 410	
410	Plate, Sheet and Strip (Ferrite Modified/ controlled)	5505		

Table 2-2. Specification Cross Reference - Continued

COMP/ALLOY DESIGN	FORM/COMMODITY	AMS	FEDERAL	MILITARY
410 (60410)	Casting Investment	5350		
	Casting, Sand	5351		MIL-S-16933 C1 I
	Wire		QQ-W-423 comp 410	
	Bars			MIL-S-861
	Bars, and Billets (For Reforging)			MIL-S-862
(51410)	Tubing, Seamless	5591		
	Tubing, Flexible			MIL-T-7880
414	Bars, Forgings	5615	QQ-S-763 C1 414	
	Bars			MIL-S-862
416 (51416F)	Bars	5610	QQ-S-763 C1 416 Se (Bar)	
	Bars and Forgings	5610		
	Bars and Billets (Reforging)			MIL-S-862 C1 6
420	Bars and Billets (For Reforging)			MIL-S-862 C1 5
	Bars and Forgings (Free Mach)	5620		
(51420)	Bars and Forgings	5621		
	Bars	5621	QQ-S-763 C1 420	
	Plate, Sheet and Strip	5506	QQ-S-766 C1 420	
	Wire		QQ-W-423	
431	Bars and Billets (For Reforging)			MIL-S-862
	Bars, Billets, Forgings, Tubing			MIL-S-18732
	Castings, Sand	5372		
	Bars, Forgings	5682	QQ-S-763, C1 431	
431 MOD	Castings, Precision Investment	5353		
440 C	Bars and Forgings	5630	QQ-S-763, C1 440C	
440 A	Bars and Forgings	5631	QQ-S-763, C1 440A	

Table 2-2. Specification Cross Reference

COMP/ALLOY DESIGN	FORM/COMMODITY	AMS	FEDERAL	MILITARY
440 F	Bars and Forgings	5632	QQ-S-763, C1 440F	
14-4PH	Castings, Investment	5340		
15-7 MO	Bar and Forging	5657		
	Plate, Sheet and Strip	5520		
17-4 PH	Bar	5643		
	Castings - Investment (Heat Treated 130,000 PSI)	5342		
	Castings - Investment (Heat Treated 150,000 PSI)	5343		
	Castings - Investment (Heat Treated)	5344		
	Electrode - Welding	5827		
	Castings - Investment	5355		
17-7 PH	Plate, Sheet and Strip	5528		MIL-S-25043
	Sheet and Strip (Precipitation Hardening)	5530		
	Bar and Forgings	5644		
	Tubing, Welded	5568		
19-9DL	Casting Sand (Solution Treated)	5369		
	Plate, Sheet and Strip	5526		
	Plate, Sheet and Strip (125000TS, Hot rolled, Stress Relieved)	5527		
	Bars (Up to 1.5 inch)	5720		
	Bars (Up to 1 inch)	5721		
	Bars and Forgings	5722		
19-9DX	Bars, Forgings and Rings	5723		
	Bars (Up to 1 inch)	5724		
	Bars (Up to 1.5 inch)	5729		
	Plate, Sheet and Strip	5538		

Table 2-2. Specification Cross Reference - Continued

COMP/ALLOY DESIGN	FORM/COMMODITY	AMS	FEDERAL	MILITARY
19-9DX (Continued)	Plate, Sheet and Strip, (Hot rolled and Stress Relieved 125,000TS)	5539		
	Bars, Forgings and Rings	5723		
	Bars (Up to 1 inch)	5724		
	Bars (Up to 1.5 inch)	5729		
19-9 MOD	Electrode, Welding, Covered (Armor applications)			MIL-E-13080
AM350	Bar	5745		
	Sheet and Strip (Cold rolled)	5540		
	Sheet and Strip (High Temp Annealed)	5548		MIL-S-8840
	Bar and Forgings	5745		
	Tubing, Seamless	5554		
	Wire, Welding	5774		
	Electrode, Coated Wire	5775		
AM355	Bar	5743		
	Castings, Investment	5368		
	Sheet and Strip	5547		MIL-S-8840
	Plate (Solution Heat Treated)	5549		
	Plate (Equalized and Over-Tempered)	5594		
	Electrode, Coated Welding	5781		
A286	Bars, Forgings, Mechanical Tubing	5734		
	Bars, Forgings, Mechanical Tubing and Rings	5735		

Table 2-2. Specification Cross Reference - Continued

COMP/ALLOY DESIGN	FORM/COMMODITY	AMS	FEDERAL	MILITARY
A286 (Continued)	Bars, Forgings, Mechanical Tubing and Rings (Sol Treated)	5736		
	Bars and Forgings and Mechanical Tubing (Annealed and Precip Treated)	5737		
	Rivets, Steel (Annealed 1650°F and partially precip treated)	7235		
Rene 41	Bars and Forgings (Solution Treated	5712		
	Bars and Forgings (Solution and Precip Treated)	5713		
	Plate Sheet and Strip (Solution Heat Treated)	5545		
Greek Ascoloy	Castings, Investment	5354		
	Plate, Sheet and Strip	5508		
	Bars, Forgings, Mechanical Tubing and Rings	5616		
Inconel 600	Wire, Annealed	5687	QQ-W-390	
	Plate, Sheet and Strip	5540		MIL-N-6840
	Bars, Forgings and Rings	5665		MIL-N-6710
	Tubing, Seamless	5580		MIL-T-7840
42 Inconel Alloy X750	Sheet and Strip	5542		MIL-N-7786

Table 2-2. Specification Cross Reference - Continued

COMP/ALLOY DESIGN	FORM/COMMODITY	AMS	FEDERAL	MILITARY
42 Inconel Alloy X750 (Continued)	Bars and Forgings	5667		
	Bars and Forgings	5668		MIL-N-8550 Cond E
Inconel X750	Wire, No 1 Temper	5698		JAN-W-562, C1 1
	Wire, Spring Temper	5699		JAN-W-562, C1 2
Hastelloy C	Castings, Prec Invest	5388		
	Casting, Sand	5389		
	Sheet	5530		MIL-N-18088
	Bar, Forgings	5750		
Hastelloy W	Bars and Forgings	5755		
	Wire	5786		MIL-R-5031, C1 12
Hastelloy X	Castings, Alloy Prec Invest	5390		
	Sheet	5536		
	Bar and Forgings	5754		
	Wire	5798		
HNM	Bars, Billet, Forging, Wire			MIL-S-17759
WASP Alloy		NONE	NONE	NONE
	MISC STANDARDS/SPECIFICATIONS - METAL PRODUCTS			
	Steel: Chemical Composition and Hardenability		Fed Std 66	
	Metal Test Methods		Fed Std 151	
	Surface Passivation			
	Corrosion Resistant Steel Parts		QQP-35	MIL-STD-753

Table 2-2. Specification Cross Reference - Continued

COMP/ALLOY DESIGN	FORM/COMMODITY	AMS	FEDERAL	MILITARY
	X-Ray Standards for Welding Electrode Qualification and Quality Conformance Test Welds			MIL-STD-775
	Identification of Pipe, Hose and Tube Lines for Aircraft, Missile Space Vehicles and Associated Support Equipment and Facilities			MIL-STD-1247
	Preparation of Test Reports			MIL-STD-831
	Marking of Aircraft and Missile Propulsion System Parts, Fabricated From Critical High Temp Alloys			MIL-STD-841
	Procedures for Determining Particle Size, Distribution and Packed Density of Powdered Materials			MIL-STD-1233
	Alloy Designation System for Wrought Copper and Copper Alloys			MIL-STD-455
	Inspection Radiographic			MIL-STD-453
	Mechanical Tests for Weld Joints			MIL-STD-418
	Qualification of Inspection Personal Magnetic Particle			MIL-STD-410
	Alloy, Nomenclature and Temper Designation for Magnesium Base Alloys			MIL-STD-409
	Tolerances for Copper and Copper Base Alloy Mill Products		FED-STD-146	
	Continuous Identification Marking of Iron and Steel		FED-STD-183	
	Identification Marking of Aluminum Magnesium and Titanium		FED-STD-184	
	Continuous Identification Marking of Copper and Copper Base Alloy Mill Products		FED-STD-185	

Table 2-2. Specification Cross Reference - Continued

COMP/ALLOY DESIGN	FORM/COMMODITY	AMS	FEDERAL	MILITARY
	Identification of Pressed Bonds, Forms, Seams and Joints Sheet Metal		FED-STD-187	
	Tolerance for Aluminum Alloy and Magnesium Alloy Wrought Products		FED-STD-245	
	Heat Treatment of Steels (Aircraft Practice) Process for			SAE-AMS-H-6875
	Steel Mill Products Preparation for Shipment and Storage			MIL-STD-163
	Tolerances for Steel and Iron Wrought Products		FED-STD-48	

2-74. GENERAL HEAT TREATING TEMPERATURES, COMPOSITION (CHEMICAL) AND CHARACTERISTICS OF VARIOUS STEEL AND STEEL ALLOYS.

See supplement data for chemical symbols.

1010. Low Carbon steel of this grade is used for manufacture of such articles as safety wire, certain nuts, cable bushings and threaded rod ends, and other items where cold formability is the primary requisite. Heat treatment is frequently employed to improve machinability. Welding is easily accomplished by all common welding methods.

COMPOSITION RANGE

C%	Mn%	P%	S%	Fe%
0.08-0.13	0.3-0.6	0-0.04	0-0.5	Balance

FORMS. See Specification Table 2-2.

HEAT TREATMENT

Normalize: 1650°-1750°F, cool in still air.
Anneal: 1650°F.
Harden: 1650°-1750°F, Quench in oil (minimum hardness) Water, and Brine (maximum hardness).

1015. Low Carbon. This material is similar in content and characteristics to 1010. Of low tensile value, it should not be selected where strength is required.

COMPOSITION RANGE

C%	Mn%	P%	S%	Fe%
0.13-18	0.3-0.6	0-0.04	0-0.05	Balance

FORMS. See Specification Table 2-2.

HEAT TREATMENT

Normalize: 1650°-1750°F
Anneal: 1600°-1650°F
Harden: 1650°-1700°F
Quench with water, oil, brine.

1020. Low Carbon. Because of the carbon range this metal has increased strength and hardness but reduced cold formability compared with the lowest carbon group. It finds wide application where carburizing is required. It is suitable for welding and brazing.

COMPOSITION RANGE

C%	Mn%	P%	S%	Fe%
8-0.23	0.3-0.6	0-0.04	0-0.05	Balance

FORMS-SPECIFICATIONS. See specifications Table 2-2.

HEAT TREATMENT

Normalize: 1700°F, air cool.
Anneal: 1600°F, furnace cool.
Carburize: 1600°F, quench in water, oil, or brine.

CARBO-NITRIDING

Temp	Time	Case	Depth	Hard-ness	Cool	Draw
1560	2.5	0.019		62	OQ	350
1650	2.5	0.018		59	OQ	350

For 1560F, use 35NH_3d 25CH_4 generator gas*.
For 1650 use 38NH_3 & 24CH_4

*Gas - American Gas Assoc Class 302.

1022. Low Carbon. This steel is similar in content and heat treatment requirements to 1020. Typical applications are case hardened roller chains, bearing races, cam shafts, etc.

COMPOSITION RANGE

C%	Mn%	Si%	P%	S%	Fe%
0.18-0.23	0.7-0.10	0-0.2	0-.04	0-.05	Balance

FORM-SPECIFICATION. See Specification Table 2-2.

HEAT TREATMENT

Normalize: 1700°F, air cool.
Anneal: 1600°F, furnace cool.
Carburize: 1550°F to 1650°F, water quench.
Tensile: 130,000 psi.
Yield: 78,000 psi.

1025. Low Carbon. Typical applications are bolts, machinery, electrical equipment, automotive parts, pipe flanges, etc. With this steel no martensite is formed and tempering is not required. This material is not generally considered a carburizing type; however, it is sometimes used in this manner for larger sections, or where greater case hardness is needed.

COMPOSITION RANGE

C%	Mn%	P%	S%	Fe%
0.22-0.28	0.3-0.6	0-0.04	0-0.05	Balance

FORM-SPECIFICATION. See Specification Table 2-2.

HEAT TREATMENT

Normalize: 1600°-1700°F, furnace cool.
Hardening: 1575°-1650°F, water quench.
Carburize: 1650°-1700°F, water or brine quench.
Tempering: 250°-400°F is optional.
Tensile strength: hot rolled 67000, cold rolled 80000.
Yield strength: hot rolled 45000, cold rolled 68000.
This steel is readily welded by common welding

methods.
Temper: 1150°F for 70,000 psi.

CORTEN Low Carbon, Low Alloy. This steel is not heat treatable, but in the annealed or normalized condition it is stronger than plain carbon steel, is easily formed, welded and machined. In addition, this alloy is 4-6 times more resistant to atmospheric corrosion than plain carbon steel.

COMPOSITION RANGE

C%	Cr%	Cu%	Mn%	Ni%
0-0.12	0.30-1.25	0.25-0.055	0.2-0.5	0-0.65

Si%	P%	S%	Fe%
0.25-0.75	0.07-0.15	0-0.05	Balance

HEAT TREATMENT

Normalize: 1650°F, air cool.
Anneal: 1550°F, furnace cool.

Stress relief 1150°F, 1 hour per inch of maximum section thickness. This alloy cannot be hardened. Tensile strength, annealed or normalized 67,000 psi. Yield strength, annealed or normalized 47,000 psi. This alloy is readily welded by the usual gas and arc methods with complete freedom from air hardening. ASTM A233 or E60 electrodes are recommended for shielded arc welding. For gas welding, high strength welding rods such as ASTM A251, CA-25, are recommended. This steel may be resistance welded to itself or other resistance weldable ferrous alloys, using the same methods applied to plain carbon steel.

NAXAC9115 Low Carbon, Low Alloy. This material is usually in the stress relieved condition. Moderate strength is maintained with high toughness up to approximately 800°F. Weldability is excellent and it machines better than carbon steels of the same tensile strengths.

COMPOSITION RANGE

C%	Cr%	Cu%	Mn%
0.1-0.17	0.5-0.75	0-0.35	0.5-0.8

Mo%	Ni%	Si%	Zn%
0.15-0.25	0-0.25	0.6-0.9	0.05-0.15

P%	S%	Fe%
0-0.04	0-0.04	Balance

SPECIFICATIONS

AMS	FORM
6354	Sheet, strip, plate.
6440	Wire.

HEAT TREATMENT

Anneal: 1625°-1650°F, furnace cool.
Normalize: 1650°-1675°F, air cool.

Stress relief anneal 900°-1150°F, air cool, 30 minutes to 6 hours. Typical room temperatures: tensile 76,500, yield 53,000. For arc welding, use low hydrogen electrodes E6015 (thin gauges) and E7015. For heliarc welding use drawn filler wire of MIL-R-5032. Perform spot welding by pulsation method for heavier gauges; use post heat cycle for lighter gauges.

1035. Medium Carbon. This steel is selected where higher mechanical properties are needed since it may be further hardened and strenghtened by heat treatment or by cold work. Typical applications are gears, clutch pedals, flywheel rings, crank shafts, tools and springs.

COMPOSITION RANGE

C% Q	Mn%	P%	S%	Fe%
0.32-0.38	0.6-0.9	0-0.04	0-0.05	Balance

FORM-SPECIFICATION. See Specification Table 2-2.

HEAT TREATMENT

Normalize: 1575°-1650°F, cool in still air.
Anneal: 1575°-1650°F, 1 hour per 1″ of section, (Preheat) Temper at 900°F for 100,000 psi.
Spheroidize: 1250°-1375°F.
Harden: 1525°-1600°F, quench in water or oil. (Brine or caustic may also be used for quenching.)

Weldability is very good by all common welding methods. Cold formability is poor, but hot formability is excellent. Tensile strength, hot rolled 85,000 psi, cold rolled 92,000 psi, yield strength, hot rolled 54,000 psi, cold rolled 79,000 psi, Brinill 183-201, respectively.

1040. Medium Carbon is selected where intermediate mechanical properties are needed and may be further hardened and strengthened by heat treatment or cold work.

COMPOSITION RANGE

C%	Mn%	Si%	P%	S%	Fe%
0.37-0.44	0.6-0.9	0-0.2	0-0.04	0-0.05	Balance

FORM-SPECIFICATION. See Specification Table-2-2.

HEAT TREATMENT

Normalize: 1575°-1650°F, air cool.
Anneal: 1550°-1625°F, furnace cool. (Tensile 79,000 psi, yield 48,000 psi annealed).
Harden: 1500°-1575°F, water or oil quench.
Temper: 1100°-1150°F, to obtain tensile 100,000 psi, yield 80,000 psi. For tensile 125,000 and yield 85,000 psi temper at 700°F. Suitable heat treatment is required to permit machining.

1045. Medium Carbon. Forgings such as connecting rods, steering arms, axles, axle shafts and tractor wheels are fabricated from this steel. Not recommended for welding.

COMPOSITION RANGE

C%	Mn%	P%	S%	Fe%
0.43-0.5	0.6-0.9	0-0.04	0-0.04	Balance

FORMS-SPECIFICATION. See Specification Table 2-2.

HEAT TREATMENT

Normalize: 1575°-1675°F, air cool.
Anneal: 1550°-1600°F, furnace cool for maximum softness.
Harden: 1475°-1550°F, quench, water or oil.
Temper: 1100°F for tensile 100,000 psi, yield 65,000 psi.
Temper: 1000°F for tensile 125,000 psi, yield 95,000 psi.

1050. Medium Carbon. This is a medium carbon type steel with high mechanical properties which may be further hardened and strengthened by heat treatment or by cold work. Application is similar to 1045. Not recommended for welding.

COMPOSITION RANGE

C%	Mn%	P%	S%	Fe%
0.46-0.55	0.6-0.9	0-0.04	0-0.05	Balance

FORMS-SPECIFICATION. See Specification Table 2-2.

HEAT TREATMENT

Normalize: 1550°-1650°F, air cool.
Anneal: 1450°-1525°F, furnace cool (Tensile 90,000 yield 50,000 annealed.)
Harden: 1475°-1550°F, oil or water quench.
Temper: 1250°F for 100,000 psi tensile, 75,000 for yield.
Temper: 1025°F for 125,000 psi tensile, 90,000 for yield.
Temper: 700°F for 150,000 psi tensile, 114,000 for yield.

1055. High Carbon. Steels of this type (1060, 1070, 1080 are in same category) have similiar characteristics and are primarily used where higher carbon is needed to improve wear characteristics for cutting edges, as well as for manufacture of springs, etc. Not recommended for welding.

COMPOSITION RANGE

C%	Mn%	P%	S%	Fe%
0.50-0.60	0.6-0.9	0-0.04	0-0.05	Balance

FORMS-SPECIFICATIONS. See Specification Table 2-2.

HEAT TREATMENT

Normalize: 1550°-1650°F, air cool.
Anneal: 1550°-1575°F.
Harden: 1450°-1550°F, water or oil quench.
Temper: 1250°F for 100,000 psi tensile, 1050°F for 125,000 tensile, 600°F for 150,000 tensile.

1060. High Carbon. See 1055 for application and characteristics

COMPOSITION RANGE

C%	Mn%	P%	S%	Fe%
0.55-0.65	0.6-0.09	0-0.04	0-0.05	Balance

FORM-SPECIFICATION. See Specification Table 2-2.

HEAT TREATMENT

Normalize: 1525°-1625°F, air cool.
Anneal: 1500°-1575°F (Tensile 104,000 psi, yield 54,000 psi annealed).
Harden: 1450°-1550°F, water or oil quench.
Temper: 1125°F for 130,000 tensile, 80,000 yield.
Temper: 1025°F for 139,000 tensile, 96,000 yield.
Temper: 925°F for 149,000 tensile, 99,000 yield.

1070. High Carbon. See 1055 for application and characteristics. In addition this alloy is used for flat springs and wire form as coil springs.

COMPOSITION RANGE

C%	Mn%	P%	S%	Fe%
0.65-0.75	0.6-0.9	0-0.04	0-0.05	Balance

FORM-SPECIFICATION. See Specification Table 2-2.

HEAT TREATMENT

Normalize: 1525°-1625°F, air cool, retard cooling rate to prevent hardness.
Anneal: 1500°-1575°F, furnace cool.
Harden: 1450°-1550°F, water or oil quench (Preheat).
Hot Working Temperature: 1550°-1650°F.
Temper: 1250°F for 100,000 psi tensile.
Temper: 1100°F for 125,000 psi tensile.
Temper: 1000°F for 150,000 psi tensile.

The high carbon content of this steel causes difficulties in arc or gas welding processes. Welding by the thermit process is satisfactory. Hot formality is very good at 1550°-1650°F.

1080. High Carbon. See 1055 for applications and characteristics.

COMPOSITION RANGE

C%	Mn%	P%	S%	Fe%
0.75-0.88	0.6-0.9	0-0.04	0-0.05	Balance

FORM-SPECIFICATION. See Specification Table 2-2.

HEAT TREATMENT

Normalize: 1550°-1650°F, air cool.
Anneal: 1475°-1525°F (Tensile 120,000, yield 66,000 psi annealed).
Harden: 1450°-1550°F, quench oil.
Temper: 1200°F for 129,000 tensile, 87,000 yield.
Temper: 1100°F for 145,000 tensile, 103,000 yield.
Temper: 900°F for 178,000 tensile, 129,000 yield.

1095. High Carbon. See 1055 for applications. In addition these steels are used for flat spring applications and in wire form as coil springs.

COMPOSITION RANGE

C%	Mn%	P%	S%	Fe%
0.9-1.03	0.3-0.5	0-0.04	0-0.05	Balance

FORM-SPECIFICATION. See Specification Table 2-2.

HEAT TREATMENT

OIL QUENCH

Normalize: 1550°-1650°F, air cool.
Anneal: 1425°-1475°F (Tensile 98,000 psi, yield 52,000 psi annealed) furnace cool. To reduce annealing time, furnace cool to 900°F and air cool.
Speroidize for maximum softness when required.
Harden: 1425°-1550°F (oil quench).
Temper: 1100°F for 146,000 psi tensile, 88,000 yield.
Temper: 800°F for 176,000 psi tensile, 113,000 yield.
Temper: 600°F for 184,000 psi tensile, 113,000 yield.

WATER QUENCH

Normalize: 1550°-1650°F, air cool.
Anneal: 1425°-1475°F.
Harden: 1425°-1500°F, quench with water.
Temper: 1100°F for 143,000 psi tensile, 96,000 yield.
Temper: 800°F for 200,000 psi tensile, 138,000 yield.
Temper: 600°F for 213,000 psi tensile, 150,000 yield.

1112. Free Cutting. This steel is used as the standard for rating the machinability of other steels. It is easy to machine and resulting surface finish is excellent. It has good brazing characteristics but is difficult to weld except with the low hydrogen electrode E6015 (AWS). This and similar grades are widely used for parts for bolts, nuts, screws, but not for parts subjected to severe stresses and shock.

COMPOSITION RANGE

C%	Mn%	P%	S%	Fe%
0-0.13 max	0.7-0.9	0.07-0.12	0.16-0.23	Balance

FORM-SPECIFICATION. See Specification Table 2-2.

HEAT TREATMENT

May be surface hardened by heating in cyanide at 1500°-1650°F, followed by single or double quench and draw. Preheat and soak at 1500°F to 1650°F and quench in oil or water; tempering is optional.

Tensile strength hot rolled bars 65,000.

Tensile strength cold drawn 83,000.

1117. Carbon (Free Cutting Steel). This material is used where a combination of good machinability and uniform response to heat treatment is needed. It is suited for fabrication of small parts which are to be cyanided or carbonitrided and may be oil quenched after case hardening heat treating.

COMPOSITION RANGE

C%	Mn%	P%	S%	Fe%
0.41-0.2	1.0-1.3	0-0.04	0.08-0.13	Balance

FORM-SPECIFICATION. See Specification Table 2-2.

HEAT TREATMENT

Normalize: 1650°F, air cool.
Anneal: 1575°F, furnace cool (Tensile 68,000 psi annealed)
Harden: 1450°F, quench in water

SINGLE QUENCH AND TEMPER

Carburized 1700°F for 8 hours.
Pot Cool
Reheat to 1450°F.
Quench in water.
Temper at 350°F
Case depth 0.045.
Case hardness 65 RC.

1137. Carbon, Free Cutting. This steel is intended for those uses where easy machining is the primary requirement. It is characterized by a higher sulphur content than comparable carbon steels, which result in some sacrifice of cold forming properties, weldability and forging characteristics.

COMPOSITION RANGE

C%	Mn%	P%	S%	Fe%
0.32-0.39	1.35-1.65	0-0.04	0.08-0.13	Balance

FORM-SPECIFICATION. See Specification Table 2-2.

HEAT TREATMENT

Normalize: 1600°-1700°F, air cool.
Anneal: 1400°-1500°F, furnace cool.
Harden 1525°-1575°, oil or water quench.

TYPICAL STRENGTH OF OIL QUENCHED

Temper: 1100°F for tensile 100,000 psi, yield 80,000 psi.
Temper: 825°F for tensile 125,000 psi, yield 100,000 psi.

TYPICAL STRENGTH OF WATER QUENCHED

Temper: 1100°F for tensile 105,000 psi, yield 90,000 psi.
Temper: 975°F for tensile 125,000 psi, yield 100,000 psi.
Tensile strength: 85,000 psi, yield 50,000 psi in annealed condition.

2317. Nickel Alloy. These specifications cover steel castings for valves, flanges, fittings and other pressure containing parts intended principally for low temperature parts.

COMPOSITION RANGE

C%	Mn%	P%	S%	Si%	Ni%	Fe%
15-0.2	0.4-0.6	0.04	0.04	0.2-0.35	3.25	Balance

FORM-SPECIFICATION. See Specification Table 2-2.

HEAT TREATMENT

Normalize: 1600°-1700°F, air cool
Anneal: 1500°-1550°F
Harden: 1375°-1525°F
Carburize: 1650°-1700°F, reheat to 1450°F to 1550°F, temper at 250°-300°F.

WATER QUENCH

Temper: 1100°F for tensile 100,000 psi, yield psi 83,000.
Temper: 875°F for tensile 125,000 psi, yield psi 100,000.
Temper: 750°F for tensile 150,000 psi, yield psi 124,000.

OIL QUENCH

Temper: 1025°F for tensile 100,000 psi, yield psi 83,000.
Temper: 850°F for tensile 125,000 psi, yield psi 88,000.
Temper: 650°F for tensile 150,000 psi, yield psi 108,000.

This steel may be welded by common welding procedures.

2330. Nickel Alloy. This is a heat treatable steel which develops high strength and toughness in moderate sections. It is used in highly stressed bolts, nuts, studs, turnbuckles, etc.

COMPOSITION RANGE

C%	Mn%	P%	S%	Si%
0.28-0.33	0.6-0.8	0-0.04	0-0.04	0.2-0.35

Ni%	Fe%
3.25-0.75	Balance

FORM-SPECIFICATION. See Specification Table 2-2.

HEAT TREATMENT

Normalize: 1600°F, preheat, cool in air.
Anneal: 1425°-1600°F, furnace cool.
Harden: 1400°-1500°F.
Quench with oil.
Temper: 1200°F-1250°F for tensile 100,000 psi, yield 90,000 psi.
Temper: 900°F for tensile 140,000 psi.
Temper: 700°F for 178,000 psi.

WATER QUENCH

700°F	-	190,000 psi
900°F	-	150,000 psi
1100°F	-	124,000 psi

2340. Nickel Alloy. This metal is similar to 2330, but has greater strength. It is an oil hardening steel.

COMPOSITION RANGE

C%	Mn%	P%	S%	Si%
0.38-0.43	0.7-0.9	0-0.04	0-0.04	0.2-0.35

Ni%
3.25-3.75

FORM-SPECIFICATION. See Specification Table 2-2.

HEAT TREATMENT

Normalize: 1600°-1700°F.
Anneal: 1450°-1600°F.
Harden: 1400°-1550°F, quench in oil.
Temper: 1100°F for 125,000 psi tensile, 105,000 psi yield.
Temper: 900°F for 150,000 psi tensile, 132,000 psi yield.
Temper: 800°F for 182,000 psi tensile, 164,000 psi yield.

2515. Nickel Alloy. This steel is quite similar to SAE 2512 and 2517, both in composition and response to heat treatment.

COMPOSITION RANGE

C%	Mn%	P%	S%	Si%
0.12-0.17	0.4-0.6	0-0.04	0-0.04	0.2-0.35

Ni%	Fe%
4.75-5.25	Balance

FORM-SPECIFICATION. See Specification Table 2-2.

HEAT TREATMENT

Normalize: 1650°-1750°F
Anneal: 1500°F
Quench: 1425°-1525°F, oil quench.
Temper: 1200°F for tensile 104,000, yield 80,000 psi.
Temper: 900°F for tensile 125,000, yield 106,000 psi.
Temper: 700°F for tensile 152,000, yield 125,000 psi.

WATER QUENCH

Temper: 1100°F for 116,000 psi.
Temper: 900°F for 138,000 psi.
Temper: 700°F for 165,000 psi.

3115. Steel Nickel Chromium Alloy.

COMPOSITION RANGE

C%	Mn%	P%	S%
0.11-0.2	0.37-0.63	0-0.048	0-0.058

Si%	Ni%	Cr%	Fe%
0.18-0.37	1.05-1.45	0.52-0.78	Balance

FORM-SPECIFICATION. See Specification Table 2-2.

HEAT TREATMENT

Normalize: 1625°-1725°F
Anneal: 1550°-1600°F
Harden: 1425°-1525°F, with oil.
Temper: 300°F for tensile, 125,000 psi, yield 86,000 psi.

CORE PROPERTIES	DRAW TEMP	TENSILE KSI	YIELD KSI
3115	300°F	125	88
Box cooled 1425°F			
3120	300°F	155	115
3115	300°F	125	86
Reheated 1475°F			
3120	300°F	155	115
3115	300°F	125	86
Oil Quenched 1525°F			
3120	300°F	155	110

3140. Nickel Chrome Alloy. This is a medium deep hardening steel capable of developing good strength and toughness when oil quenched.

COMPOSITION RANGE

C%	Mn%	P%	S%	Si%
0.37-0.45	0.6-0.95	0-0.04	0-0.04	0.2-0.35

Ni%	Cr%	Fe%
1.0-1.5	0.5-0.8	Balance

FORM-SPECIFICATION. See Specification Table 2-2.

HEAT TREATMENT

Normalize: 1550°-1700°F
Anneal: 1475°-1550°F (Tensile 94,000 psi, yield 66,000 psi annealed).
Harden: 1475°-1550°F, oil quench.
Temper: 1200°F for tensile 125,000 psi, yield 105,000 psi.
Temper: 1000° for Tensile 14,000 psi, yield 125,000 psi.
Temper: 800°F for Tensile 184,000 psi, yield 178,000 psi.
Temper: 700°F for Tensile 200,000 psi.

3310. Nickel - Chromium Alloy. This steel has exceptionally high hardenability and is well suited for heavy parts which must have high, surface hardness combined with high and uniform properties when heat treated. It is commonly used in case hardened gears, pinions, etc. It is similar to Krupp Nickel Chromium except it contains more nickel.

COMPOSITION RANGE

C%	Mn%	Si%	Ni%
0.08-0.13	0.45-0.6	0.2-0.35	3.25-3.75

Cr%	P%	S%	Fe%
1.4-1.75	0-0.025	0-0.25	Balance

FORM-SPECIFICATION. See Specification Table 2-2.

HEAT TREATMENT

Normalize: 1600°-1700°F, air cool.
Anneal: 1475°-1575°F, furnace cool to 700°F, air cool.
Quench: 1500°F-1550°F, 0il, Cool Slowly
Carburize: 1700°F, for 8 hours, reheat to 1500°F, oil quench, temper 300°F, for tensile 170,000 psi, yield 142,000 typical for 1/2″ diameter rod.

PSI. Effective case depth 0.05″.

4037. Molydenum Alloy. This steel is used for such parts as gears, shafts, leaf and coil springs and hand tools.

COMPOSITION RANGE

C%	Mn%	P%	S%	Si%
0.35-0.4	0.7-0.9	0-0.04	0-0.04	0.2-0.35

Mo%	Fe%
0.2-0.3	Balance

FORM-SPECIFICATION. See Specification Table 2-2.

HEAT TREATMENT

Anneal: 1500°-1600°F, furnace cool.
Normalize: 1600°F, cool in air.
Harden: 1550°F, quench in oil.
Temper: 1225°F for 100,000 psi.
Temper: 1100°F for 125,000 psi.
Temper: 975°F for 150,000 psi.

4130. Chromium - Molydenum Alloy. Typical usages for this material is in the manufacture of gear shafts axles, machine tool parts, etc.

COMPOSITION RANGE

C%	Mn%	P%	S%	Si%
0.26-0.35	0.3-0.75	0-0.04	0-0.05	0.15-0.35

Cr%	Mo%	Ni%	Fe%
0.75-1.2	0.08-0.25	0-0.25	Balance

FORM-SPECIFICATION. See Specification Table 2-2.

HEAT TREATMENT

Harden (austenitize): 1550°-1600°F, water quench, for oil quench 1575°-1625°F.
Austenitize Castings:1600°-1650°F,1 hour, oil quench.
Spherodize: 1400°-1425°F, 6-12 hours, furnace cool.
Temper: 1150°F for tensile 132,000, yield 122,000.
Temper: 1025°F for tensile 151,000, yield 141,000.
Temper: 950°F for tensile 163,000, yield 159,000.
SAE Steels: 8630 and 8730 have similar characteristics.
Annealed: 1525°-1585°F (tensile 80,000 psi, yield 57,000 psi annealed), furnace cool.
Normalize: (cast) 1900°F, 1 hour, A.C. Hardening: 1550°-1650°F, quench in oil.
Normalize: (wrought) 1600°-1700°F, air cool.

4135. Chromium Molydenum Alloy.

COMPOSITION RANGE

C%	Mn%	Si%	Cr%
0.32-0.39	0.6-0.95	0.2-0.35	0.8-1.15

Mo%	P%	S%	Fe%
0.15-0.25	0-0.04	0-0.04	Balance

HEAT TREATMENT

Normalize: 1600°-1700°F, air cool.
Anneal: 1525°-1575°F, furnace cool.
Harden: 1550°-1625°F, quench in oil.
Temper: 1100°F for 125,000 tensile psi.
Temper: 1050°F for 150,000 tensile psi.
Temper: 850°F for 180,000 tensile psi.

17-22A(V). Structural (Ultra High Strength) Low Alloy. This is a high strength, heat resistant steel with a 1000 hour rupture strength of 1100°F (30,000 psi tensile strength). It is used in turbine rotors, and for components of guided missiles, in which high temperatures are encountered for short periods.

COMPOSITION RANGE

C%	Cr%	Ce%	Mn%	Mo%
0.25-0.3	1.0-1.5	0-0.5	0.6-0.9	0.4-0.6

Ni%	Si%	V%	P%	S%
0-0.5	0.55-0.75	0.75-0.95	0-0.04	0-0.04

Fe%
Balance

FORM-SPECIFICATION. AMS6303 Bar, forging, forging stock.

HEAT TREATMENT

Normalize: 1700°-1850°F, hold for 1 hour per inch of thickness, air cool. Larger sections may be fan-cooled in order to accelerate cooling. All sections should be so placed as to provide access of air to all surfaces.

Anneal: 1450°F, hold at this temperature 1 hour for each inch of section thickness. Cool down 20°F per hour to 1100°F, then air cool.

Oil Quenching requires prior heating to 1750°F, for each inch of thickness. Annealed bars, 1 inch diameter have tensile strength 87,000 yield strength, 67,800. Pancake forgings normalized at 1800°F + tempering at 1225°F, 6 hours have tensile strength 142,000, yield strength 126,500, hardness BHN 311-321. This alloy may be welded by any of the commercial methods in use. A welding rod corresponding to 17-22A(S) is available. When pre-heating is required depending upon size of section and type of welding procedure, a temperature of 600°F is generally used. Post heating or stress relief is recommended.

4137CO. This ultra-high strength steel has yield strength in the 230,000-240,000 psi range. It forms and welds readily. It was developed for use in high performances solid rocket motor cases. Alternate designations are Unimach VC X 2, MX-2, and Rocoloy. Machining characteristics are similar to 4140.

COMPOSITION RANGE

C%	Cr%	Co%	Mn%
0.39-0.4	0.95-1.2	0.98-1.23	0.6-0.79

Mo%	Si%	V%	P%
0.22-0.35	0.97-1.19	0.14-0.16	0-0.015

S%	Fe%
0-0.012	Balance

SPECIFICATIONS: None

FORMS: Sheet, strip, plate, bar, forging, wire.

HEAT TREATMENT

Normalize: 1750°F, 30 minutes, air cool.
Spheroidize: Anneal: 1420°-1460°F, 2 hours, fast cool to 1235°-1265°F, hold 14 to 24 hours, air cool. Resulting hardness RB95 maximum.

Intermediate stress relieve to restore ductility of formed parts, 1250°F for 10 minutes, air cool. Stress relieve after welding 1250°F, 30 minutes minimum.

Austenitize: 1700°F for sections less than 1/2 inch 1725°F for sections larger than 1/2 inch, 20 minutes minimum to 1 hour maximum per inch thickness, oil or salt quench at 400°F. Maximum time in salt 12 minutes.

Double temper 540°-560°F for two consecutive 2 hour periods with intermediate cooling to room temperature. Weldability characteristics are good using the Tungsten-arc-inert-gas process.

4140. Medium Carbon Chromium - Molybdenun (Nitriding Grade). This steel is widely used where the higher strength and higher hardenability of 4340 is not required. It can be nitrided.

C%	Mn%	P%	S%	Cr%
0.38-0.43	0.75-1.0	0-0.040 mx	0-0.040 mx	0.80-1.1

Mo%	Si%	Fe%
0.15-0.25	0.2-0.35	Balance

SPECIFICATIONS

TYPE 4140

AMS	FORM	MILITARY
5336	Precision Investment Castings	
5338	Precision Investment Castings	
6378	Bars	
6379	Bars	
6381	Heavy Wall Tubing	
6382	Bars, Forgings, Forgings, Stock	MIL-S-5626

HEAT TREATMENT

Normalize: 1600°-1650°F (air cool) minimum 1 hour.
Anneal: 1550°-1600°F furnace cool.
Harden: 1550°-1600°F 30 minutes, oil quench.
Spheroidize: 1400°-1425°F furnace cool.
Temper 4 hours to obtain desired strength. See table below.

DRAW TEMPERATURES

1300°F - 100,000 psi
1175°F - 120,000 to 140,000 psi
1075°F - 140,000 to 160,000 psi
950°F - 160,000 to 180,000 psi
850°F - 180,000 to 200,000 psi
725°F - 200,000 to 220,000 psi

SAE 4330 V Mod. This steel is 4330 improved by the addition of vanadium, and is primarily used heat treated to a tensile strength between 220 and 240 KSI. It is highly shock resistant and has better welding characteristics than higher carbon steels.

CHEMICAL COMPOSITION

C%	Mn%	Si%	P%	Si%	Cr%
0.28-0.33	0.75-1.00	0.20-0.35	0.040	0.040	0.75-1.00

Ni%	Mo%	V%	Fe%
1.65-2.00	0.35-0.50	0.05-0.10	Balance

HEAT TREATMENT

Normalize: 1600° to 1700°F, air cool.
Temper: normalized condition for machinability 1250°F maximum.
Full anneal at 1525°F to 1575°F furnace cool or cool in ash or lime.
Austenitize: 1550° to 1600°F 15 minutes per inch thickness, oil quench 75° to 140°F.
Temper: 180 to 200 KSI, 950° to 110°F, 4 hours.
Temper: 200 to 220 KSI, 750° to 950°F, 4 hours.
Temper: 220 to 240 KSI, 600° to 750°F, 4 hours.

4150. Chromium-Molybdenun. This metal is used for such items as gears, shafts, pistons, springs, axles, pins, connecting rods.

COMPOSITION RANGE

C%	Mn%	P%	S%	Si%	Cr%
0.48-0.53	0.75-1.0	0-0.040	0-0.04	0.2-0.35	0.8-0.12

Mo%	Fe%
0.18 - 0.25	Balance

FORMS-SPECIFICATIONS. See Specification Table 2-2.

HEAT TREATMENT

Normalize: 1550°-1650°F
Anneal: 1450°-1525°F
Harden: 1475°-1525°F, oil quench
Temper: 1200°F for tensile 128,000 yield 116,000
Temper: 1100°F for tensile 150,000 yield 135,000

Temper: 950°F for tensile 180,000 yield 163,000
Temper: 800°F for tensile 200,000 yield 186,000

521000. High Carbon, High Chromium Alloy. This steel is used for anti-friction bearings and other parts requiring high heat treated hardness of approximately Rockwell C60, toughness and good wear resistance qualities. It is best machined in the spheroidized annealed condition.

COMPOSITION RANGE

C%	Cr%	Mn%	Si%	S%	P%
0.95-1.1	1.3-1.6	0.25-0.45	0.2-0.35	0-0.025	0-0.025

Fe%
Balance

FORMS-SPECIFICATIONS. See Specification Table 2-2.

HEAT TREATMENT

Normalize: 1650°-1700°F air cool
Anneal: 1250°-1340°F hold 5 hours. Heat to 1430°-1460°F, at 10°F per hour, hold 8 hours. Cool to 1320°F at 10°F per hour. Cool to 1250°F at furnace rate and air cool.
Spheroidize: Slow cool (about 5°F per hour) following austenitizing by extended heating at a temperature near the ACM point or by isothermal transformation at 1275°F following austenitizing.
Harden: Quench in water from 1425°F-1475°F or quench in oil from 1550°-1600°F, then temper to desired hardness. The Rockwell hardness at various temperatures is listed below:

Temper: 400°F, RC60
Temper: 600°F, RC55
Temper: 800°F, RC48
Temper: 100°F, RC40
Temper: 1200°F, RC28

LADISH D-6-A. Low Alloy High Strength. This alloy is suitable for hot work die applications and structural material in aircraft and missiles. It may be heat treated to strength levels up to 300,000 psi, and at 240,000 has excellent toughness. At strength levels below 220,000 psi it is suitable for elevated temperature applications below 900°F. It may readily be welded and cold formed in the annealed or spheroidized condition. It also can be temper straightened.

COMPOSITION RANGE

C%	Cr%	Mn%	Mo%	Ni%	Si%	V%	Fe%
0.46	1.0	0.75	1.0	0.55	0.22	0.05	Balance

SPECIFICATION. None.

FORMS. Available in most wrought forms and forgings.

HEAT TREATMENT

Anneal: 1500°-1550°F, cool down at 50°F per hour to 1000°F.
Normalize: 1600°-1650°F, 30 minutes, air cool.
Austenitize: 1550°-1575°F, 30 minutes, oil quench. Sections 1 inch or less in cross sections may be air cooled.
Temper: 300°-1275°F, time and temperature depend on hardness desired.
Stress relieve: 1000°-1250°F one to two hours, air cool.

TYPE LADISH D-6-A

FORM	UP TO 1″ THICK BAR
Condition	Vacuum remelt by consumable electrode process. Normalize 1650°AC 1550°F, air cool + 600°F temper.
Tensile	282,000 psi
Yield	255,000 psi

Nitralloy 135 Mod. Steel ultra high strength (Nitriding Grade). This alloy is well suited for case hardening by nitriding. This process produces a case of extreme hardness without appreciably changing core tensile strength or yield strength. It is also readily machined. After nitriding it may be used where high resistance to abrasion and mild corrosion resistance are required.

COMPOSITION RANGE

A1%	C5	Cr%	Mn%	Mo%	Si%
0.95-1.3	0.38-0.43	1.4-1.8	0.5-0.7	0.3-0.4	0.2-0.4

P%	S%	Fe%
0-0.04	0-0.04	Balance

SPECIFICATIONS

TYPE NITRALLOY 135 MOD

AMS	FORMS	MILITARY
5470	Plates, Tubing, Rods, Bar, forgings stock.	MIL-S-6701

HEAT TREATMENT

Anneal: 1450°F, 6 hours, furnace cool.
Normalize by slowly heating to 1790°-1810°F, air cool.
Austenitize: 1700°-1750°F.
Oil quench sections less than 2 inches thick.
Temper: 1000°-1300°F 1 hour minimum per inch of thickness.

(NOTE: Temper 50°F minimum above nitriding temperatures).
Nitride: 930°-1050°F.

TYPE NITRALLOY 135 MOD

FORM	BAR		
Condition	1725°F, oil quench sections less than 3 inches, water quench sections greater than 3 inches temper 1200°F, 5 hours.		
SIZE - DIA	LESS THAN 1 1/2 inches	1 1/2 to 3 inches	3 to 5 inches
Tensile	135,000 psi	125,000 psi	110,000 psi
Yield	100,000 psi	90,000 psi	85,000 psi

In welding the major problem to avoid is loss of aluminum and chromium in the weld area, the loss of which would prevent subsequent nitriding.

4337, 4340 Steel Nickel - Chromium Molybdenum Alloy. These two alloys are similar except that carbon content differs slightly. The carbon content of 4337 is minimum 0.35%, maximum 0.4%, good strength, high hardenability and uniformity are characteristics. It can be heat treated to strength values within a wide range. At 260,000 to 280,000 psi tensile this steel has been found superior to other common low alloy steels as well as some of the recently developed more complex low alloy steels. It possesses fair formability when annealed and may be welded, by special processes, which require strict control. No welding shall be performed on this alloy heat treated above 200,000 psi unless specifically approved by design engineer.

COMPOSITION RANGE

C%	Mn%	Si%	P%	S%	Cr%
0.38-0.43	0.65-0.85	0.2-0.35	0-0.04	0-0.04	0.7-0.9

Ni%	Mo%	Fe%
1.54-2.0	0.2-0.3	Balance

FORMS-SPECIFICATIONS. See Specification Table 2-2.

HEAT TREATMENT

Normalize: 1600°-1700°F, 1 hour of maximum thickness, air cool. Temper, normalize condition for improved machinability 125°F maximum.
Anneal: 1475°-1575°F, furnace cool or cool in ash or lime.
Harden: 1475°-1550°F, oil quench.
Spheroidize Anneal: 1425°F, 2 hours, then furnace cool to 1210°F, hold 8 hours, furnace cool or air cool.
Stress relief parts after straightening, machining, etc.
Temper: 1100°F for tensile 150,000 yield, 142,000.
Temper: 900°F for tensile 190,000, yield, 176,000.
Temper: 725°F for tensile 220,000, yield, 200,000.
Temper: 400°-500°F for tensile 260,000, 2 hours per thickness, 6 hours minimum.

Parts heat treated to 260,000-280,000 psi tensile and subsequently subjected to grinding, machining or straightening should be tempered to 350°-400°F, 4 hours minimum. Temperature should not exceed tempering temp or reduce the tensile strength below 260,000 psi. Austenitize 1475°-1575°F, 15 minutes for each inch of thickness. Normalize, welded or brazed parts before austenitizing. Cool after austenitizing.

To heat treat for regular machining, normalize or austenitize, then heat to 1200°F (maximum 1250°F) for 15-20 hours. Resulting hardness should be 229-248 BHN.

Austenitize: 1575°-1625°F, oil quench.
Tempering range is limited to 400°-600°F preferably no higher than 550°F.
Temper: 600°F for 230,000 psi tensile, 194,000 psi yield.
Temper: 550°F for 234,000 psi tensile, 193,000 psi yield.
Temper: 500°F for 235,000 psi tensile, 191,000 psi yield.
Temper: 400°F for 239,000 psi tensile, 183,000 psi yield.

This alloy is easily welded by conventional methods using low hydrogen electrode of similar composition.

4615. Steel Nickel Molybdenum Alloy. This is a high grade carburizing steel for use where reliability and uniformity are required.

COMPOSITION RANGE

C%	Mn%	P%	S%	Si%	Ni%
0.13-0.18	0.45-0.65	0-0.04	0-0.04	0.2-0.35	1.65-2.0

Mo%	Fe%
0.2-0.3	Balance

HEAT TREATMENT

Normalize: 1675°-1725°F
Anneal: 1575°-1625°F
Harden: 1425°-1550°F oil quench.
Carburize: 1425°-1550°F

Where case hardening is paramount, reheat to 1425°-1475°F quench in oil. Tempering 250°-350°F is optional. It is generally employed for partial stress relief and improved resistance to cracking from grinding operation.

4620. Steel Nickel Molybdenum Alloy. This is a medium hardenability case steel. Its hardenability characteristics lie between that of plain carbon steel and the high alloy carburized steel. It may be used for average size case hardened automotive parts such as gears, piston pins, crackshafts, etc.

COMPOSITION RANGE

C%	Mn%	P%	S%	Si%	Ni%
0.17-0.24	0.45-0.65	0-0.04	0-0.04	0.2-0.35	1.65-2.0

Mo%	Fe%
0.2-3.0	Balance

HEAT TREATMENT

Normalize: 1650°-1750°F
Anneal: 1550°-1600°F
Quench: (High temperature) 1550°F
Quench: (Low temperature) 1425°F
Carburize: 1650°-1700°F.

Recommend practice for maximum case hardness: Direct quench from pot.

(1) Carburize: at 1700°F for 8 hours.
(2) Quench: in agitated oil.
(3) Temper: at 300°F
Case depth: 0.075.
Case hardness: RC62
Single Quench and Temper:
(1) Carburize: 1700°F for 8 hours.
(2) Pot cool.
(3) Reheat: 1500°F.
(4) Quench: in agitated oil.
(5) Temper: 300°F.
Case depth: 0.075.
Case hardness: RC62
Recommended practices for maximum core toughness: Direct quench from pot.
(1) Carburize: 1700°F for 8 hours.
(2) Quench: in agitated oil.
(3) Temper: 450°F.
Case depth: 0.06
Case hardness: RC58
Single Quench and Temper:
(1) Carburize: 1700°F for 8 hours.
(2) Pot Cool.
(3) Reheat: to 1500°F
(4) Quench: in agitated oil.
(5) Temper: 450°F.
Case depth: .065
Case hardness: RC59

4640. Steel Nickel Molybdenum. This steel has excellent machinability at high hardness levels, and small distortion in heat treatment. Its application is primarily gears, spline shafts, hand tools, and machine parts.

COMPOSITION RANGE

C%	Mn%	P%	S%	Si%	Ni%
0.38-0.43	0.6-0.8	0-0.04	0-0.04	0.2-0.35	1.65-2.0

Mo%	Fe%
0.2-0.3	Balance

FORMS-SPECIFICATIONS. See Specification Table 2-2.

HEAT TREATMENT

Normalize: 1600°-1750°F
Anneal: 1450°-1550°F
Quench: 1450°-1550°F, oil quench, agitated oil.
Temper: 1200°F for 100,000 psi.
Temper: 1100°F for 120 to 140,000 psi.
Temper: 1000°F for 140 to 160,000 psi.
Temper: 900°F for 160 to 180,000 psi.
Temper: 800°F for 180 to 200,000 psi.
Temper: 700°F for 200 to 220,000 psi.

6150, 6152. Chromium Vanadium Alloy. These two steels are essentially the same, differing only in the amount of Vanadium. Alloy 6152 contains a minimum of 0.1% Vanadium. Typical usages are for flat springs under 1/8 inch thick, cold formed, and 1/8 inch and over hot formed; oil quenched, and drawn at 725°-900°F to 44-48 or 48-52 RC, and for coil springs over l/2 inch diameter with same heat treatment. It is also used for valve springs, piston rods, pump parts, spline shafts, etc.

COMPOSITION RANGE

C%	Mn%	P%	S%	Si%	Cr%
0.48-0.53	0.7-0.9	0-0.04	0-0.04	0.2-0.35	0.8-1.1

V%	Fe%
0.15 min	Balance

FORM-SPECIFICATIONS. See Specification Table 2-2.

HEAT TREATMENT

Normalize: 1625°-1750°F, furnace cool.
Anneal: 1500°-1600°F. (Tensile psi 90,000 yield 58,000 psi annealed.)
Harden: 1550°-1600°F, oil quench.
Temper: 1100°F for tensile psi 150,000 yield psi 137,000 psi.
Temper: 800°F for tensile psi 210,000 yield psi 194,000 psi.
Spheroidized annealed to 183-241 BHN = 45%

8615. Steel-Ni-Cr-Mo Alloy. This is a triple alloy case-hardening steel with medium hardenability.

It is primarily used for differential pinions, engine pins, gears etc.

COMPOSITION RANGE

C%	Mn%	P%	S%	Si%	Ni%	Cr%
0.13-0.18	0.7-0.9	0-.04	0-0.04	0.2-0.3	0.4-0.6	0.4-0.6

Mo%	Fe%
0.15-0.25	Balance

FORMS-SPECIFICATIONS. See Specification Table 2-2.

HEAT TREATMENT

Psuedo-Carburize 1650°-1700°F, box cool, reheat 1550°F, oil quench.
Temper: 300°F for tensile 100,000 psi yield 72,500 psi.
Normalize: 1650°-1725°F.
Anneal: 1575°-1650°F.
Harden: 1475°-1575°F.

8617. Steel Ni-Cr-Mo Alloy. This steel is very similar to 8615, but develops somewhat greater strength.

COMPOSITION RANGE

C%	Mn%	P%	S%	Si%	Ni%	Cr%
0.15-0.2	0.7-0.9	0-0.04	0-0.04	0.2-0.35	0.4-0.7	0.4-0.6

Mo%	Fe%
0.15-0.25	Balance

FORM-SPECIFICATIONS. See Specification Table 2-2.

HEAT TREATMENT

Normalize: 1650°-1725°F
Anneal: 1575°-1650°F.
Harden: 1474°-1575°F
Carburize: 1700°F for 8 hours, oil quench.
Draw at 300°F
Tensile: 128,000 psi yield 94,000 psi.

8620. Ni-Cr-Mo-Alloy. This steel is similar to 8615 and 8617 though stronger. It is used for ring gears, transmission gears, cam shafts and for good core properties with high surface hardness after case hardening. It is also used in the heat treated condition as chain, at about 100,000 psi yield strength. It is classed as medium hardenable.

COMPOSITION RANGE

C%	Mn%	P%	S%	Si%	Ni%
0.18-0.23	0.7-0.9	0-0.04	0-0.04	0.2-0.35	0.4-0.7

Cr%	Mo%	Fe%
0.4-0.6	0.15-0.25	Balance

FORMS-SPECIFICATIONS. See Specification Table 2-2.

HEAT TREATMENT

Normalize: 1600°-1750°F.
Anneal: 1575°-1625°F.

CARBURIZING:

For maximum case hardness: Direct quench from pot.
(1) Carburize: 1700°F for 8 hours.
(2) Quench: in agitated oil.
(3) Temper: 300°F.
Case depth: 0.075.
Case hardness: RC64.
Single Quench and temper:
(1) Carburize: 1700°F for 8 hours.
(2) Pot cooled.
(3) Reheat: to 1550°F.
(4) Quench: in agitated oil.
(5) Temper: 300°F.
Case depth: 0.075
Case hardness: RC64
Recommended practices for maximum core toughness.
Direct quench from pot.
(1) Carburize: 1700°F for 8 hours.
(2) Quench: in agitated oil.
(3) Temper: 450°F.
Case depth: 0.050
Case hardness: RC58
Single Quench and Temper.
(1) Carburize: 1700°F for 8 hours.
(2) Pot cool.
(3) Reheat: to 1500°F.
(4) Quench: in agitated oil.
(5) Temper: 450°F.
Case depth: 0.076.
Case hardness: RC61.

8630. Steel Ni-Cr-Mo Alloy This steel has characteristics very similar to 4130. It is used for aircraft engine mounts, and other aircraft parts due to good properties when normalized in light sections, and its air hardening after welding.

COMPOSITION RANGE

C%	Mn%	P%	S%	Si%	Ni%
0.28-0.33	0.7-0.9	0-0.04	0-0.04	0.2-0.35	0.4-0.7

Cr%	Mo%	Fe%
0.4-0.6	0.15-0.25	Balance

FORMS-SPECIFICATIONS. See Specification Table 2-2.

HEAT TREATMENT

Normalize: 1550°-1650°F.
Anneal: 1500°-1550°F (Tensile 90,000 psi, tensile

60,000 annealed), furnace cool.
Harden: 1500°-1575°F, oil or water quench.
Temper: 1000°F for 150,000 psi tensile, 140,000 psi yield strength.
Temper: 700°F for 200,000 psi tensile, 180,000 psi yield strength.

8640. Steel Ni-Cr-Mo. Typical uses, propeller shafts, transmission gears, spline shafts, heavy duty bolts, etc. 4140 has higher strength and ductility and slightly better machinability.

COMPOSITION RANGE

C%	Mn%	P%	S%	Si%	Ni%
0.38-0.43	0.75-1.0	0-0.04	0-0.04	0.2-0.35	0.4-0.7

Cr%	Mo%	Fe%
0.4-0.6	0.15-0.25	Balance

FORMS-SPECIFICATIONS. See Specification Table 2-2.

HEAT TREATMENT

Normalize: 1550°-1650°F.
Anneal: 1475°-1575°F.
Harden: 1475°-1575°F, oil quench.
Temper: 1100°F for 145,000 psi tensile, 130,000 psi yield.
Temper: 800°F for 200,000 psi tensile, 184,000 psi yield.
Temper: 700°F for 220,000 psi tensile, 205,000 psi yield.

8735. Steel Ni-Cr-Mo. This metal is used for shapes, tubing, aircraft engine studs, knuckles, etc. It is similar in characteristics to 8630 and 8640

FORMS-SPECIFICATIONS. See Specification Table 2-2.

COMPOSITION RANGE

C%	Mn%	P%	S%	Si%	Ni%
0.33-0.38	0.75-1.0	0-0.04	0-0.04	0.2-0.35	0.4-0.7

Cr%	Mo%	Fe%
0.4-0.6	0.2-0.3	Balance

HEAT TREATMENT

Normalize: 1575°-1625°F
Anneal: 1525°-1525°F.
Harden: 1525°-1600°F Oil quench.
Temper: 1200°F for tensile 119,000 psi, yield 93,000 psi.
Temper: 1100°F for tensile 131,000 psi, yield 107,000 psi.
Temper: 900°F for tensile 149,000 psi, yield 127,000 psi
Temper: 800°F for tensile 170,000 psi
Temper: 775°F for tensile 200,000 psi

8740. Steel Ni-Cr-Mo. This steel is similar to 4140. It may be satisfactorily used for axles, tool joints, bits, core drills, reamer bodies, drill collars, piston rods, aircraft engine bolts, shapes, tubing etc.

COMPOSITION RANGE

C%	Mn%	P%	S%	Si%	Ni%
0.38-0.43	0.75-1.0	0-0.04	0-0.04	0.2-0.35	0.4-0.7

Cr%	Mo%	Fe%
0.4-0.6	0.2-0.3	Balance

FORMS-SPECIFICATIONS. See Specification Table 2-2 .

HEAT TREATMENT

Normalize: 1575°-1625°F.
Anneal: 1500°-1575°F (Tensile 103,000 psi, yield 66,000 psi annealed)
Harden: 1500°-1575°F (Quench in agitated oil)
Temper: 1100°F for tensile 160,000 psi, yield 152,000 psi.
Temper: 900°F for tensile 190,000 psi, yield 183,000 psi.
Temper: 800°F for tensile 210,000 psi, yield 198,000 psi.
Temper: 725°F for tensile 220,000.

9260, 9261, 9262. Steel Silicon. These are similar alloy spring steels, oil hardening type. The quantities of chromium in each, constitutes the only chemical variations in these alloys. Typical applications are coil and flat springs, axles, chisels, bolts. etc.

COMPOSITION RANGE

	C%	Mn%	P%	S%	Si%
9260	0.55-0.65	-0.7-1.0	0-0.04	0-0.04	1.8-2.2

Cr%	Fe%
---	Balance

	C%	Mn%	P%	S%	Si%
9261	0.55-0.65	0.75-1.0	0-0.04	0-0.04	1.8-2.2

Cr%	Fe%
0.1-0.25	Balance

	C%	Mn%	P%	S%	Si%
9262	0.55-0.65	0.75-1.0	0-0.04	0-0.04	1.8-2.2

Cr%	Fe%
0.25-0.4	Balance

FORMS-SPECIFICATION. See Specification Table 2-2.

HEAT TREATMENT

Normalize: 1600°-1650°F.
Anneal: 1525°-1575°F
Harden: 1575°-1625°F quench in agitated oil.

Temper: 1100°F for tensile 165,000 psi, yield 144,000 psi.
Temper: 900°F for tensile 214,000 psi, yield 192,000 psi.
Temper: 600°F for tensile 325,000 psi, yield 280,000 psi.

9310. Steel Ni Cr-Mo (Electric Furnace Steel). This is a high hardenability case steel, since it is a high alloy, both the case and core have high hardenability. This type of steel is used particularly for carburized parts having thick sections such as bearing races, heavy duty gears etc.

COMPOSITION RANGE

C%	Mn%	P%	S%	Si%	Ni%
0.7-0.13	0.4-0.7	0-0.025	0-0.025	0.2-0.35	2.95-3.55

Cr%	Mo%	Fe%
1.0-1.45	0.08-0.15	Balance

FORMS-SPECIFICATIONS. See Specification Table 2-2.

HEAT TREATMENT

Normalize: 1625°-1725°F, air cool.
Anneal: 1475°-1575°F, furnace cool.
Recommended practice for maximum case hardness:
Direct quench from pot.
(1) Carburize: at 1700°F for 8 hours.
(2) Quench: in agitated oil.
(3) Temper: 300°F.
Case depth: 0.047 inch
Case hardness: RC62
Single Quench and Temper:
(1) Carburize: 1700°F for 8 hours.
(2) Pot cool.
(3) Reheat: to 1450°F.
(4) Quench: in agitated oil.
(5) Temper: 300°F.
Case depth: 0.047 inch
Case hardness: RC62.
To obtain maximum core toughness: Direct quench from pot.
(1) Carburize: 1700°F for 8 hours.
(2) Quench in agitated oil.
(3) Temper: 450°F.
Case depth: 0.039 inch.
Case hardness: RC54.
Single quench and temper:
(1) Carburize: 1700°F for 8 hours.
(2) Pot cool.
(3) Reheat to 1450°F.
(4) Quench: in agitated oil.
(5) Temper: 450°F.
Case depth: 0.047 inch.
Case hardness: RC59.

Type 301. Steel Austenitic Stainless. This steel belongs to the sub-family of 18-8 steels, which vary only slightly in chromium and nickel and contain no other metallic alloying element. This alloy may be strengthened to an exceptional degree by cold work. For best results, cold work should be followed by stress relieving at 400°-800°F.

COMPOSITION RANGE

C%	Mn%	Si%	P%	Cr%	Ni%	S%
0.08-0.15	0-2.0	0-1.0	0-0.04	17.0-19.0	6.0-8.0	0-0.03

Cu%	Fe%
0-0.05	Balance

FORM-SPECIFICATION. See Specification Table 2-2.

HEAT TREATMENT

Anneal: 1950°-2050°F,1 hour per inch thickness, water quench.
Cool to 800°F within 3 minutes maximum.
To relieve the elastic characteristics and increase the compressive yield strength of cold worked conditions, 400°-800°F, 36 to 8 hours maximum respectively. After forming in order to prevent stress cracking, full anneal, or alternately 600°F, 1/2 to 2 hours. This alloy can be hardened only by cold work. Maximum tensile strength, 1/4 hard 125,000, 1/2 hard 150,000, full hard 185,000 psi. Full anneal is mandatory when, exposed to corrosive media, such as hot chlorides, etc. which may lead to stress corrosion cracking.

Type 302. Steel Austenitic Stainless. This alloy is similar to Type 301 in composition and characteristics. It is inferior in strength to 301, however, possesses superior corrosive resistance. It is generally used in the annealed conditions

COMPOSITION RANGE

C%	Mn%	Si%	P%	S%	Cr%
0.08-0.25	0-2.0	0-1.0	0-0.045	0-0.03	17.0-19.0

Ni%	Fe%
8.0-10.0	Balance

FORMS-SPECIFICATIONS. See Specification Table, 2-2.

HEAT TREATMENT

The heat treatment and resulting strength is similar to that recommended for type 301, except that the temperature range for annealing type 302 ranges between 1925°-2075°F.

Type 303, Type 303Se, Steel Austenitic Stainless. These varieties of the 18-8 austenitic stainless family contain additions of sulphur and selenium for the purpose of improving machining characteristics. However the presence of these elements

tend to decrease formability and corrosion resistance. Type 303 Se is superior to 303 in these respects. The cast form of 303Se is also known as CF-16F.

ALLOY	TYPE 303 PERCENT		TYPE 303Se PERCENT	
	Min	Max	Min	Max
C	-	0.15	-	0.15
Mn	-	2.0	-	2.0
Si	-	1.0	-	1.0
P	-	0.04	.12	0.17
S	.18	0.35	-	0.04
Cr	17.0	19.0	17.0	19.0
Ni	8.0	10.0	8.0	10.0
Mo	-	0.75	-	0.5
Cu	-	0.5	-	0.5
Se	-	-	0.15	0.35
Iron (Fe)	Balance		Balance	

HEAT TREATMENT

Anneal or solution treat: 1900°-2050°F, air cool or quench, depending on section thickness, cool to 800°F maximum within 3 minutes.
Bars, forgings: 1900°-1950°F, 1/2 hour per inch of thickness, water quench.
Sheet, tubing: 1900°-1950°F, 10 minutes, air cool up to 0.064 thickness, water Quench 0.065 inch and thicker.
Castings: 2000°-2100°F, 30 minutes minimum.
This alloy may be hardened only by cold work.
Welding is not generally recommended.
These steels are subject to carbide precipitation when subjected to temperature over 800°F.

Type 304, Type 304L. Steel Austenitic Stainless. This steel is produced in two grades, type 304 with 0.08 carbon (maximum) and type 304L with 0.03% maximum carbon. They have properties similar to Type 302 but the corrosion resistance is slightly higher. These metals are available as castings under the designations CF-8 and CF-3 respectively. Welding may be readily accomplished by all common methods.

COMPOSITION RANGE

	TYPE 304 PERCENT		TYPE 304L PERCENT	
	MIN	MAX	MIN	MAX
C	-	0.08	-	0.03
Mn	-	2.0	-	2.0
Si	-	1.0	0.5	1.0
P	-	0.04	-	0.04
S	-	0.03	-	0.03
Cr	18.0	20.0	18.0	20.0
Ni	8.0	11.0	8.0	11.0
Mo	-	0.5	-	-
Cu	-	0.5	-	-
Iron	Balance		Balance	

HEAT TREATMENT

Same as types 303 and 303Se. This alloy can only be hardened by cold work.

TYPE 314. Steel-Austenitic Stainless. This is a non-heat-treatable stainless steel generally used in the annealed condition. It possesses high resistance to scaling and carburizing and is used for parts and welded assemblies requiring corrosion and oxidation resistance to 2000°F. It is subject to embrittlement after long time exposure to temperature in the 1200°-1600°F range.

COMPOSITION RANGE

C%	Cr%	Cu%	Mn%	Mo%	Ni%
0.12	23.0-25.0	0.50	1.0-2.0	0.50	19.0-22.0

Si%	P%	S%	Fe%
1.7-2.3	0.04	0.03	Balance

FORM-SPECIFICATION. See Specification Table 2-2.

HEAT TREATMENT

Anneal (solution treat) 1900°-2100°F using rapid air cooling for sheet and light plate and water quench for heavier sections. Stress relief and best corrosion resistance to high temperatures properties is achieved by final annealing at 1900°F minimum. To restore ductility after embrittlement has occurred, anneal 1900°-1950°F for 10-60 minutes.

This alloy may be hardened only by cold work.

TYPE 314

FORMS	BAR	PLATE	SHEET	WIRE	
CONDITION	ANNEALED	ANNEALED	ANNEALED	ANNEALED	HARD DRAWN
THICKNESS-IN	1 IN DIA			0.002 to 0.010	0.002 to 0.010
Tensile	100,000	100,000	100,000	95,000-130,000	245,000-275,000
Yield	50,000	50,000	50,000	35,000-70,000	230,000-260,000
Hardness RB	89	89	89	----------	----------

TYPE 316 and 317. Steel Austenitic Stainless. Wrought products are readily formable and weldable. Castings are also weldable, and the metal arc method is most often used. These alloys have better corrosion resistance than 30302 or 30304 types.

COMPOSITION RANGE

C%	Mn%	Si%	P%	S%	Cr%
0-.08	1.25-2.0	0-1.0	0-0.04	0-0.03	16.0-19.0

Ni%	Mo%	Cu%	Iron%
11.0-14.0	2.0-2.5	0-0.5	Balance

FORMS-SPECIFICATIONS. See Specification Table 2-2.

HEAT TREATMENT

Anneal wrought products 1850°-2150°F, air cool or quench depending on section size.
For sheet alloys, annealing temperature 1950°F, minimum.
Castings 1950°-2100°F, water or oil quench or air cool. Low side of temperature range is used for CF 8M, (Cast Alloy) but CF 12M castings should be quenched from above 2000°F.
Stabilize for high temperature service 1625°-1675°F, stress relieve 400°-500°F, 1/2 to 2 hours.
This alloy may be hardened only by cold work. In annealed condition, tensile 90,000 psi, yield 45,000 psi.

TYPE 321. Steel Austenitic Stainless.This is one of the two stabilized 18-8 steels Since titanium forms a carbide of low solid solubility, the possibility of intergranular precipitation and of the associated intergranular corrosion is reduced. Therefore, type 321 is used primarily either for parts fabricated by welding without postweld annealing or for service at 800°-1500°F. This steel is available in all wrought forms. Welding rods and castings are not produced in this type.

CORROSION RANGE

C%	Mn%	Si%	P%	S%	Cr%
0-0.08	0-2.0	0.4-1.0	0-0.04	0-0.03	17.0-20.0

Ni%	Mo%	Ti%	Cu%	Iron (Fe)%
8.0-13.0	0-0.5	*6XC-0.7	0-0.5	Balance

FORMS-SPECIFICATIONS. See Specification Table 2-2.

* 6 times columbian content.

HEAT TREATMENT

Full anneal 1750°-1850°F, 1 hour per inch in thickness, two hours minimum for plate furnace cool or air cool. Stabilizing anneal for service 900°-1500°F, heat to 1500°-1650°F one hour per inch thickness, 2 hours minimum for plate. Stress relieve after fabrication 1300°F.
This may be hardened only by cold work.

TYPE 321

TENSILE - YIELD FORM	SHEET, STRIP	PLATE	BAR		WIRE	
					SOFT TEMPER	
CONDITION	ANNEAL			ANN+CD		
THICKNESS IN	--	--	ALL	1 INCH	0.062	0.50
Tensile	90000	85000	85000	95000	115000	95000
Yield	35000	30000	35000	60000	85000	65000

Full anneal or stabilizing anneal will eliminate sensitized conditions.

TYPES 347 and 348. Steel Austenitic Stainless is the second of two stabilized 18-8 steels (see type 321 for other). Since columbian forms a carbide of very low solubility, the possibility of intergranular precipitation and of the associated intergranular corrosion are practically eliminated. Therefore, Type 347 is used principally for parts fabricated by welding without postweld annealing, or for long service between 800°-1500°F. Columbian is usually associated with the similar element tantalum which is included in the columbian analysis, specifying only the total of both elements. Corrosion resistance of this alloy is similar to Type 302, however it has a greater tendency to pitting corrosion and attacks in streaks. Intergranular corrosion is absent in this steel unless it is overheated to above 2150°F. At this temperature columbian carbides are going in to solid solution and subsequent rapid cooling, followed by heating to 1200°F, will cause precipitation and reduce the resistance to intergranular attack. A stabilizing anneal will restore the corrosion resistance.

COMPOSITION RANGE

C%	Mn%	Si%	P%	S%	Cr%
0-0.08	0-2.0	0.5-1.0	0-0.04	0-0.03	17.0-19.0

Ni%	Mo%	Cb1%	Iron (Fe%)
9.0-13.0	0-0.5	*10XC-1.1	Balance

*10 Times Columbian Content.

FORMS-SPECIFICATIONS. See Specification Table 2-2.

HEAT TREATMENT

Full anneal wrought products 1800°-1900°F, 1 hour per inch of thickness 2 hours minimum for plate, furnace cool or air cool. Full anneal castings 1900°-2000°F 30 minutes minimum. Stabilizing anneal for service 800°-1500°F, 1500°-1650°F, 1 hour per inch thickness, 2 hours minimum for plate. Stress relieve after fabrication 1300°F.

Alloy may be hardened only by cold work.

Welding. Fusions welding of this alloy is comparable to type 304L. Heavy sections may crack during welding or subsequent heating. Postweld annealing is not required, although a stress relief is recommended. This steel is subject to carbide precipitation at temperatures in excess of 2150°F.

Type 414. Steel Martensitic Stainless. This steel has good resistance to weather and water. It should be passivated. Stainless type 416 has similar mechanical properties, workability and resistance to corrosion, however, corrosion resistance is not as good as the 300 series stainless. It has better machinability but less weldability. Type 420 has higher mechanical properties, similar workability and machinability.

COMPOSITION RANGE

C%	Mn%	P%	S%	Si%	Cr%
0.08-0.15	0-1.0	0-0.04	0-0.03	0-0.10	11.5-13.5

Ni%	Fe%
1.25-2.5	Balance

FORMS-SPECIFICATIONS. See Specification Table 2-2.

HEAT TREATMENT

Annealing: 1200°-1300°F.
Hardening: 1800°-1900°F, cool rapidly.
Tensile strength in annealed condition 117,000 yield, 98,000 psi.
Tensile strength in annealed cold drawn 130,000 yield, 115,000 psi.

TYPES 403, 410, 416. Steel-Martensitic Stainless. This is a free machining type of alloy. Best performance is obtained if heat treated or cold worked to 180-240 BHN. It is magnetic in the hardened condition and is not normally used in the annealed condition.

COMPOSITION RANGE

C%	Mn%	P%	S%	Si%	Cr%	Mo%	Si%
0.15	1.25	0.06	0.15	1.0	14.0	0.6	0.6

Fe%
Balance

FORMS-SPECIFICATION. See Specification Table 2-2.

HEAT TREATMENT

Anneal: 1500°-1650°F, furnace cool 50°F per hour to 1100°F.
Harden: 1700°-1850°F, cool rapidly, oil and quench.

Tensile - Yield strength is as follows:

(1) Annealed - Tensile 75,000 psi, yield 40,000 psi.
(2) Heat Treated - Tensile 110,000 psi, yield 85,000 psi.
(3) Tempered and Drawn - Tensile 100,000 psi, yield 85,000 psi. Weldability is poor except by use of low-hydrogen electrodes.

Temper: 400°-1300°F. Avoid 700°-1075°F temper range.
Temper: 1300°F for 100,000 psi.
Temper: 1075°F for 120,000 psi.
Temper: 575°-600°F for 180,000 psi.

TYPE 420. Steel Martensitic Stainless. This is a medium carbon grade of martensitic stainless which in the past has been intensively used in the cutlery industry. It has recently proved satisfactory for air weapon application where its high strength permits heat treatment for tensile strength up to 240,000 psi. In the fully annealed condition formability of this alloy almost equals the 1/4 hard austenitic stainless steels. Shearing type operations such as blanking and punching are not recommended. It machines best in conditions having approximately 225 BHN.

COMPOSITION RANGE

C%	Mn%	Si%	P%	S%	Cr%
0.3-0.4	0-1.0	0-1.0	0-0.04	0-0.03	12.0-14.0

Ni%	Mo%	Fe%
0-0.5	0-0.5	Balance

FORMS-SPECIFICATIONS. See Specification Table 2-2.

HEAT TREATMENT

Full anneal 1550°-1650°F one hour per inch of thickness, furnace cool (50°F per hour) to 1100°F. Subcritical anneal 1300°-1350°F, 3 hours minimum, air cool. Austenitize 1800°-1850°F oil quench, depending on section size. Heavy sections should be preheated at 1250°F. Temper 400°-1500°F, 3 hours minimum. Tempering between 600°-1000°F is not generally recommended due to reduced ductility and corrosion resistance.

TYPE 431. Steel Martensitic Stainless. This alloy is suitable for highly stressed parts in corrosive environment.

COMPOSITION RANGE

C%	Mn%	Si%	P%	S%	Cr%
0.2	1.0	1.0	0.04	0.03	15.0-17.0

Ni%	Fe%
1.25-2.5	Balance

FORMS-SPECIFICATIONS. See Specification Table 2-2.

HEAT TREATMENT

Type 431 steel must be protected from contamination at furnace temperature by dry inert atmosphere (organ, helium) or vacuum in the furnace working zones, except that air or salt bath furnaces may be employed for tempering operations. Parts shall be transferred from furnace working zones to the oil bath within a 30-second interval prior to quenching. Materials in the solution-treated condition (not more than 2 percent segregated ferrite or austenite in the microstructure) may be hardened by the following treat treatment.

HT-200 CONDITION

Austenitize at 1850°±25°F for 30 minutes, quickly transfer from furnace to oil quenching bath at not over 100°F followed by refrigeration at -100°F±10°F for 2 hours, tempering at 550°F±25°F for 2 hours, air cool, and final temper at 550°±25°F for 2 hours; or austenitize 1850°±25°F for 30 minutes, marquench into salt bath at 400°F, air cool to room temperature, refrigerate at -100°±10°F for 2 hours, temper 550°±25°F for 2 hours, air cool, temper 550°F for 2 hours.

HT-125 (125,000 tensile)

Austenitize at 1850°±25°F for 30 minutes, quickly transfer from furnace to oil quench to bath at not over 100°F, temper 1200°±25°F for 2 hours, air cool, temper 1200°±25°F for 2 hours.

CAUTION

Avoid tempering or holding within range from 700° to 1100°F.

HT-115 (115,000 Tensile and Yield 90,000 PSI)

Heat Cond A material to 1800°-1900°F for 30 minutes, oil quench from furnace, temper at a temperature not lower than 1100°F.

HT-175 (175,000 Tensile and 135,000 Yield PSI)

Heat Cond A material to 1850°-1950°F, quench in oil from furnace temper at a temperature not higher than 700°F.

17-4PH. Steel, Martensitic Stainless, Precipitation Hardening. This stainless steel possesses high strength and good corrosion and oxidation resistance up to 600°F.

COMPOSITION RANGE

C%	Cb%	Cr%	Cu%	Mn%
0.07 max	0.15-0.45	15.5-17.5	3.0-5.0	1.0 max

Ni%	P%	S%	Si%	Fe%
3.0-5.0	0.04 max	.03 max	1.0 max	Balance

SPECIFICATION: MIL-S-81506

HEAT TREATMENT

To condition A-1900°±25°F 30 minutes, air cool or oil quench below 90°F.

From condition A to
Condition H900(RH-C 40/47) 900° ± 10°F, 1 hour, air cool.
Condition H925(RH-C 38/45) 925° ± 10°F, 4 hours, air cool.
Condition H950(RH-C 37/44) 950° ± 10°F, 4 hours, air cool.
Condition H975(RH-C 36/43) 975° ± 10°F, 4 hours, air cool.
Condition H1000(RH-C 35/42) 1000° ± 10°F, 4 hours, air cool.
Condition H1025(RH-C 35/42) 1025° ± 10°F, 4 hours, air cool.
Condition H1050(RH-C 33/40) 1050° ± 10°F, 4 hours, air cool.
Condition H1075(RH-C 31/39) 1075° ± 10°F, 4 hours, air cool.
Condition H1100(RH-C 32/38) 1100° ± 10°F, 4 hours, air cool.
Condition H1125(RH-C 30/37) 1125° ± 10°F, 4 hours, air cool.
Condition H1150(RH-C 28/37) 1150° ± 10°F, 4 hours, air cool.

17-7PH. Steel Martensitic Stainless (Precipitation Hardening). This stainless steel possesses good corrosion resistance, may be machined and formed in its annealed condition, and is used up to temperatures of 800°F.

COMPOSITION RANGE

A%	C%	Cr%	Mn%	Ni%
0.50-1.0	0.10-0.12	16.0-18.0	1.00	6.0-8.0

Si%	P%	S%	Iron
1.0-5.0	0.045	0.030	Balance

SPECIFICATION: See MIL-S-25043.

HEAT TREATMENT

Condition A. Solution anneal 1925°-1975°F, 30 minutes per inch of thickness, air cool. Age condition A to condition TH1050, 1375° to 1425°F, 1-1/2 hour, air cool to 50° to 60°F within 1 hour, hold at 50° to 60°F 1/2 hour (condition TO) + 1040° to 1060°F, 1-1/2 hour. Age condition A to condition RH 950, 1735° to 1765°F, 10 minutes, refrigerate (condition A 1750°) to -90° to -110°F 8 hours (condition R100), + 940° to 960°F, 1 hour. Age condition C of cold rolled sheet or cold drawn wire to condition CH 900, 890° to 910°F for 1 hour.
Condition A - 130 to 150 KSI ultimate, 55 KSI yield.
Condition T - 125 to 145 KSI ultimate 75 to 100 KSI yield.
Condition RH950 - 200 to 215 KSI ultimate 180 to 190 KSI yield.
Condition RH1050 - 180 to 200 KSI ultimate 150 to 185 KSI yield.
Condition C - 200 to 215 KSI ultimate 175 to 185 KSI yield.
Condition CH900 - 240 to 250 KSI ultimate, 230 to 240 KSI yield.

TYPE 440A, 440B, 550C, 440C. Steel Martensitic Stainless. These steels are similar except for carbon range, therefore they are grouped since heat treatment requirements are the same. These steels are used for cutlery, valves, etc.

COMPOSITION RANGE

	C%	Mn%	Si%	P%	S%
440A	0.6-0.75	1.0 max	1.0 max	0.04 max	0.03 max

Cr%	Mo%	Fe%
16.0-18.0	0.75 max	Balance

	C%	Mn%	Si%	P%	S%	Cr%	Mo%
440B	0.75-0.95	1.0	1.0	0.04	0.03	16.0-18.0	0.75

Fe%
Balance

	C%	Mn%	Si%	P%	S%	Cr%	Mo%
440C	0.95-1.2	1.0	1.0	0.04	0.03	16.0-18.0	0.75

Fe%
Balance

FORMS-SPECIFICATIONS. See Specification Table 2-2.

HEAT TREATMENT

Anneal: 1550° to 1650°F.
Temper: 300°-800°F.
Harden: 1850°-1950°F, cool rapidly.
440A, tensile 270,000 psi, yield 260,000 psi.

440B, tensile 280,000 psi, yield 270,000 psi.
440C, tensile 285,000 psi, yield 275,000 psi.

Welding is not recommended.

15-7-MO. Steel Martensitic Stainless. This alloy is a further development of 17-7PH alloy and due to molybdenum content it can be heat treated to high strength at room and elevated temperature (up to 1000°F). The heat treatment is identical to 17-7PH and other properties are identical or similar to 17-7PH.

FORMS - sheet, strip, plate, bars and forgings.

SPECIFICATION - AMS 5520, AMS 5657.

COMPOSITION RANGE

C%	Mn%	Si%	P%	S%	Cr%
0.09	1.0	1.0	0.4	0.03	14.0-16.0

Ni%
6.50-7.75

Mo%	A1%	Fe%
2.0-3.0	0.75-1.50	Balance

HEAT TREATMENT

Condition A. Solution anneal sheet and strip, 1925°-1975°F, 3 minutes per 0.1 inch thickness, air cool. Bar and forgings solution anneal 1925°-1975°F, 30 minutes per inch thickness, water quench. Age condition A to condition TH1050, 1375° to 1425°F, 1-1/2 hour (austenite conditioning), air cool to 50° - 60°F within 1 hour, hold at 50° - 60°F, 1/2 hour (condition T) + 1040° - 1060°F, 1-1/2 hour, air cool. Age condition A to condition RH 950, 1735° - 1765°F, 10 minutes (austenite conditioning), air cool (condition A 1750) ±90° to 110°F, 8 hours (condition R100) + 940° to 960°F, 1 hour, air cool. Age condition C, sheet cold rolled or wire cold drawn to condition CH 900, by heating 890° -910°F for 1 hour, air cool. TH and RH conditions are also used with difference final age hardening temperatures, such as TH1150, RH1050, etc.

TYPICAL PROPERTIES FOR VARIOUS CONDITIONS:

Condition A - 130 to 150 KSI ultimate, 55-65 KSI yield, hardness 90-100.
Condition T - 125 to 145 KSI ultimate, 75-90 KSI yield, hardness 28-30.
Condition TH1050 - 190 to 210 KSI ultimate, 170-200 KSI yield, hardness RC40-45.
Condition RH950 - 225 to 240 KSI ultimate, 200-225 KSI yield, hardness RC46-48.
Condition R100 - 180 KSI ultimate, 125 KSI yield, hardness RC40.
Condition C - 220 KSI ultimate, 190 yield, hardness RC45.
Condition CH900 - 265 KSI ultimate, 260 yield, hardness RC50.

PH 14-8 MO. This alloy (sheet) is similar to PH 15-7 MO except it has slightly lower tensile and yield strength but considerable higher toughness and superior welding characteristics. In general this alloy is unstable during exposure to temperatures exceeding 500°F, which is a common characteristic of precipitation hardening stainless steels.

FORMS AND CONDITIONS - available - sheet and strip.

Condition A - annealed C cold worker.

CHEMICAL CONDITION

C%	Mn%	Si%	Ph%	S%	Cr%
0.02-0-05	1.0	1.0	0.015	1.0	13.50-15.50

Ni%
7.50-9.50

Me%	Al%	Fe%
2.0-3.0	0.75-1.50	Rem

HEAT TREATMENT

Anneal to Condition A, 1800°-1850°F, 30 minutes air cool. Age condition A to SRH conditions, 1685° 1715°F, 1 hour, air cool and within 1 hour cool to -100°F, 8 hours + age 1 hour, air cool. Aging at 940°-960°F or 1040°-1060°F is generally used with the higher temperature giving somewhat lower strength but after better toughness. Age cold worked alloy, condition C, 890°-910°F or 1040°-1060°F, 1 hour, air cool.

MECHANICAL PROPERTIES TYPICAL

Condition A - 150 KSI ultimate, 65 KSI yield, hardness, RB100 max.
Condition SRH 950 - 220 KSI ultimate, 190 KSI yield hardness RC40.

Condition SRH1050 - 200 KSI ultimate, 180 KSI yield, hardness RC38.

This alloy is subject to salt stress corrosion, however, early test indicate it is superior in this respect to 17-7PH and PH 15-7 MO.

This general welding characteristics is similar to 17-7 PH. Higher toughness may be obtained by annealing after welding and then heat treating.

19-9 DL 19-9 DX. These stainless steels are not heat treatable, but can be hardened to a limited extent by cold working or hot cold working. In chemical composition 19-9DL contains columbium which was replaced by a higher molybdenum and titanium conten in 19-9DX.

CHEMICAL COMPOSITION OF 19-9DL:

C%	Mn%	Si%	Ph%	Si%	Cr%
0.28-0.35	0.75-1.50	0.30-0.80	0.040	0.030	18.0-21.0

Ni%	Mo%	W%	Cb+Ta	Ti%	Cu%
8.0-11.0	1.0-1.75	1.0-1.75	0.10-0.35	0.10-0.35	0.50

Fe%
Balance

CHEMICAL COMPOSITION 19-9DX:

C%	Mn%	Si%	Ph%	S%	Cr%
0.28-0.35	0.75-1.50	0.30-0.80	0.040	0.030	18.0-21.0

Ni%	Mo%	W%	Ti%	Cu%	Fe%
8.0-11.0	1.25-2.00	1.0-1.75	0.40-0.75	0.50	Balance

HEAT TREATMENT

Bar and forgings, 1800° to 2150°F (1/2 to 1 hour) rapid air cool, oil water quench. Sheet/strip, 1650° to 1800°F (1/2 to 1 hour) rapid air cool. Avoid higher temperatures to prevent resolution and precipitation of carbides.
Castings, 1950° to 2050°, 1/2 to 1 hour minimum, air cool.
Solution Treat: Same as anneal.
Stress relief: 1175° to 1225°F (4 hours) air cool. This treatment is applied to hot worked or hot cold worked material for service up to 1300°F. It is also applied to cold worked materials immediately after working to prevent stress cracking.
Age: Bar and forgings, 1200° to 1400°F, casting 1575° to 1625°F, 8 hours minimum, air cool.

NOTE

Intergranular corrosion may occur in certain environments unless annealed at 1800°F, followed by rapid cooling.

AM-350. Steel - Age Hardening Stainless. This alloy is one of a series of age hardening steels which combines high strength at temperatures up to 800°F and higher with the corrosion resistance of stainless steels.

COMPOSITION RANGE

C%	Mn%	Si%	P%	S%	Cr%
0.08-0.12	0.5-1.25	0-0.5	0-0.04	0-0.03	16.0-17.0

Ni%	Mo%	N%	Fe%
4.0-5.0	2.5-3.25	0.07-0.13	Balance

FORM-SPECIFICATION TABLE 2-2.

HEAT TREATMENT

Anneal to condition H - 1900° to 1950°F, 3/4 hour minimum per inch of thickness, rapid air cool to 80°F. Anneal to condition L - 1685° to 1735°F, 3/4 hour minimum, per inch of thickness, rapid air cool to 80°F. Subzero cool and age condition L to condition SCT, cool to 100°F, hold 3 hours minimum + 850° to 1050°F, 3 hours minimum Age to condition SCT 850°, 825° - 875°F. Age to condition SCT 1000 975° to 1025°F. Double age either condition H or condition-L to condition DA, 1350° - 1400°F, 2 hours, air cool to 80°F and heat to 825° - 875°F, 3 hours. Thoroughly degreased and cleaned prior to annealing to avoid harmful surface reactions and to facilitate subsequent pickling. Allowance must also be made for growth which will result from heat treating. The expansion on aging from condition H to set amounts to 0.002 - 0.004 inch per inch.

AM-355. Steel - Age Hardening stainless This alloy combines high strength at temperatures up to 850°F with the corrosive resistance of stainless steel. This alloy differs from AM-350 by a lower chromium and a higher carbon content. It possesses good formability in the high temperature annealed condition. Corrosion resistance of this alloy is slightly lower than that of AM-350.

FORM-SPECIFICATIONS. See Specification Table 2-2.

HEAT TREATMENT

Anneal to condition H for maximum formability and stability.
Anneal to condition H: Plate and forgings at 1925°-1975°F, 1 hour minimum per inch, water quench: sheet and welded tubing, 1850° to 1900°F, 3/4 hour minimum per inch, rapid air cool. Bar should not be annealed to condition H unless subsequently subjected to forgings. Anneal to Condition L: 1685°-1735°F ---Sheet and strip, 3/4 hour per inch, air cool; plate 3/4 hour inch, oil or water quench. Condition H plate, if not subsequently severely cold formed, should be equalized before annealing to condition L and aging to condition SCT. Bar forgings and tubing, 1 hour minimum per inch thickness, oil or water quench. Equalize and age bar for best machineability, 1350°-1400°F, 3 hours, air cool to 80°F maximum + 1000° to 1050°F, 3 hours. Resulting should be approximately RC38 Subzero cool and age condition L to condition SCT, cool to -100°F, hold 3 hour minimum, 850° to 1050°F for 3 hours minimum. Age condition SCT 850, 825° to 875°F. Age to condition SCT 1000, 975° to 1025°F. Double age condition L to condition DA, 1300° to 1450°F 1 to 2 hours, air cool to 80°F, 825° to 875°F, 3 hours minimum. Homogenize sand and shell mold castings, 2000°F, 2-4 hours, air cool up to 1 inch thick, oil or water quench, section above 1 inch.

HNM. Steel - Age Hardening Stainless. This is a precipitation hardening austenitic steel, with high rupture and creep properties in the 1000°-1400°and not prone to overage at these temperatures. In the solution annealed condition it has a Brinell hardness of 201 maximum. It has a low

magnetic permeability, and is suitable for transformer parts, non-magnetic bolts, aircraft structural, engine components, shafts and gears. This material is very susceptible to work hardening. It is somewhat inferior to regular 18cr-8ni stainless types, however, machining requirements are similar requiring heavy positive feeds and sharp cutting tools. Welding is not recommended, however brazing may be successfully accomplished by use of orayacetylene torch and furnace methods, using an alloy conforming to specification AMS 4755.

COMPOSITION RANGE

C%	Cr%	Mn%	Ni%	P%	Si%	S%	Iron
0.30	18.5	3.5	9.5	0.25	0.5	0.025	Balance

FORM-SPECIFICATIONS. See Specification Table 2-2.

HEAT TREATMENT

Anneal 2000°-2150°F, 30 minutes, water quench. Sections 5/8 inches thick may be air cooled. The optimum solution treatment for best properties after aging is approximately 2050°F. Age 1300°F, 16 hours, air cool.

AM355

FORM	BAR		SHEET	
Condition	Solution Treat 2050°F 30 minutes oil quench	Solution Treat 2050°F 30 minutes Water quench	Solution Treat 15 minutes air cool	Solution Treat 2050°F air cool & age 1300°F, 16 hrs
Tensile PSI	116,000	145,000	106,000	133,000
Yield PSI	56,000	92,000	55,000	90,000
Hardness BHN	192	302		
RB			87.5	
RC				33

16-15-6. Steel - Iron - Chromium - Nickel - Alloy. This alloy was developed as a replacement for 16-25-6 alloy and contains less nickel. However, the lower nickel content is balanced by additional manganese which allows an increase in the nitrogen content that can be retained during melting.

COMPOSITION RANGE

C%	Cr%	Mn%	Mo%	Ni%	Si%
0-.07	15.0-17.5	6.5-8.5	5.0-7.0	14-0-17.0	0-1.0

N%	P%	S%	Iron (Fe)
0.30-0.40	0-0.03	.03	Balance

FORM. Bar, forging.

SPECIFICATION. None.

HEAT TREATMENT

Anneal 1700°-2300°F.
Solution treat 2125°-2175°F, air cool, water or oil quench, depending on section size. Cold work (about 20% reduction) and age (bar up to 1-1/2 inch) 1200°-1300°F, 2 to 8 hours. At a temperature of 1200°F a tensile of 145,000 and yield of 100,000 psi is obtained.

V57. Steel - Nickel Chromium Stainless (Austenitic). This alloy has a good combination of tensile and creep rupture properties up to 1500°F at high stresses and is used for some parts of aircraft gas turbines.

COMPOSITION RANGE

A1%	B%	C%	Cr%	Mn%	Mo%	Ni%	Si%
0.25	0.008	0.06	15.0	0.25	1.25	25.5	0.55

Ti%	V%	S%	P%	Iron
3.0	0.25	0.025	0.025	Balance

FORM. Bar, Forging.

SPECIFICATION. None.

HEAT TREATMENT

Anneal 1700°-2300°F.
Solution treat 2125°-2175°F, air cool, water or oil quench, depending on section size. Cold work (about 20% reduction) and age (bar up to1/2 inch) 1200°F-1300°F 2 to 8 hours.

At a temperature of 1200°F a tensile of 145,000 and yield of 100,000 psi is obtained.

SUPPER ALLOYS H/L

V36. Steel Cobalt Base - Chromium-Nickel-Alloy. This is a solid solution - hardening alloy for service at 1300°-1800°F where strength and corrosion resistance is important. Used for guide vanes in gas turbines, after burner parts and high temperature springs. Chiefly furnished in sheet, but may be supplied in billet, bar, forging and wire.

COMPOSITION RANGE

C%	Cr%	C1%	Ta%	Iron%	Mn%	Mo%
0.25-0.33	24.0-26.0	1.5-2.5	0-5.0	0-1.2	3.5-4.5	

Ni%	Si%	W%	S%	P%	Cobalt
19.0-21.0	0-1.0	1.5-2.5	0-0.03	0-0.03	Balance

SPECIFICATION. None.

HEAT TREATMENT

This alloy is primarily solid solution hardened and only small strength increases can be obtained by aging. Solution treatment for thick sections 2200°-2275°F, 1 hour, water quench. Age 1400°F for 16 hours. Stress relieve cold worked alloy 900°F, 2 hours.

TYPE V36

FORM Condition	SHEET		
	Sol Treat 15 min 2250°F+ age	Sol Treat +20%, cool rapidly	Sol Treat +60%, cool rapidly
Tensile	147,000	166,000	279,000
Yield	83,000	127,000	248,000
RC	25	---	---

W152. Steel. Cobalt Chromium Tungsten Corrosion Resistant Alloy. This is a casting alloy generally used in the "as-cast"condition. It is used for investment cast parts requiring high stress rupture properties at elevated temperatures, has excellent castability and foundry characteristics. Primary use has been first-stage turbine vanes. Alternate Designations. Haynes Alloy No 152, PWA 653, CF 239.

COMPOSITION RANGE

C%	Cr%	C1+TA	Iron%	Mn%	Ni%
0.40-0.5	20.0-22.0	1.5-2.5	1.0-2.0	0-0.5	0-1.0

Si%	W%	P%	S%	Cobalt
0-0.5	10.0-12.0	0-0.04	0-0.04	Balance

SPECIFICATION. None.

FORMS. Available in "as cast condition".

HEAT TREATMENT

Stress relief: 1575°-1625°F, 2 hours, air cool. Age hardening: Above 1200°F susceptible to age hardening which increases alloy strength but causes loss in ductility.
Tensile Strength: As cast, tensile strength 125,000 psi. Rockwell As cast, RC38.

HAYNES ALLOY NO. 151. Cobalt Base Corrosion Resistant Alloy. This alloy may be air melted or air cast. It is used as gas turbine blades and rotors within the heat range 1200°-1700°F.

COMPOSITION RANGE

B%	C%	Cr%	Iron%	Mn%	Ni%
0.03-0.08	0.4-0.5	19.0-21.0	0-2.0	0-1.0	0-1.0

Si%	Ti%	W%	P%	S%	Cobalt%
0-1.0	0.05-0.5	12.0-13.5	0-0.03	0-0.03	Balance

SPECIFICATION. None.

FORMS. Available as castings and investment castings.

HEAT TREATMENT

This material is generally used in the "as cast" condition. The best creep rupture properties are in the 1300°-1500°F range. Solution treat 2170°-2200°F 1 hour minimum, rapid air cool. This treatment reduces tensile properties below 1400°F and lowers creep rupture strength.
Aging 1400°F 4 hours air cool after solution treating, results in higher tensile properties than "as cast" material, but creep rupture properties are somewhat lower than the "as cast" alloy.

Hardenability. As-Cast hardness at room temperature RC33.

GMR-235. Nickel Base Corrosive Resistant Alloy. GMR-235 and GMR-235D are nickel based alloys precipitation hardening, high temperature alloys developed for investment cast gas turbine wheels, buckets and vanes, operating above 1400°F. They are similar to Hastelloy R-235 but contain more aluminum. The composition with maximum aluminum and titanium content is designated GMR-235D.

COMPOSITION RANGE

	GMR-235 %		GMR-235D	
	MIN	MAX	MIN	MAX
A1	2.5	3.5	3.25	4.0
B	0.05	0.1	0.05	0.1
C	0.1	0.2	0.1	0.2
Cr	14.0	17.0	14.0	17.0
Co	0.1	0.2	0	0
Iron	8.0	12.0	3.5	5.0
Mn	0	0.25	0	0.1
Mo	4.5	6.0	4.5	6.0
Si	0	0.60	0	0.3
Ti	1.5	2.5	2.0	3.0
Ni	Balance	Balance	Balance	Balance

SPECIFICATIONS. None.

HEAT TREATMENT

Solution treatment 2050°F 1 to 3 hours, air cool (GMR 235) Solution treatment 2100°F 2 hours, air cool (GMR-235D). For heavier sections (of both alloys) temperatures should be increased to 2150°F, 2 to 4 hours, air cool. Aging at 1800°F, 5 hours from the "as cast" condition improves the stress rupture life of the alloy. These alloys precipitation harden rapidly during air cooling and aging treatments are usually unnecessary. "As-Cast" room temperatures hardness for both alloys is RC36 maximum. Tensile 115,000 psi yield 90,000 psi.
Form This material is available in wrought form only, except that GMR235 is available in cast form.

HASTELLOY ALLOY R-235. Nickel Base Corrosion Resistant Alloy. This is a nickel base aluminum-titanium precipitation hardening alloy. It possesses high strength up to 1800°F with good resistance to oxidation and overaging in high temperature service. This alloy is readily fabricated and welded in the solution treated condition.

COMPOSITION RANGE

A1%	B%	C%	Cr%	Co%	Iron%
1.75-2.25	0-0.009	0-0.16	14.0-17.0	0-2.5	9.0-11.0

Mn%	Mo%	Si%	Ti%	P%	S%
0-0.25	4.5-6.5	0-0.6	2.25-2.75	0-0.01	0-0.03

Ni%
Balance

SPECIFICATION. None.

FORMS. Sheet, Strip, Plate, Bar and Wire

HEAT TREATMENT

Solution treatment 1950°-2000°F 1/2 hour, water quench. Material treated at higher solution temperature (2200°F) is subject to strain-age cracking. Final heat treatment after fabrication of sheet and bar depends upon properties desired. To obtain maximum long time stress-rupture life, solution treat at 2175° 2225°F, 15 minutes, water quench. Then heat to 2025°-2075°F, hold at temperature for 30 minutes and cool in still air. To obtain maximum room and high temperature tensile strength or short time rupture strength, solution treat at 1950°-2000°F hold at temperature for 30 minutes and air cool. Then age at 1385°-1415°F hold at temperature for 16 hours and air cool.

TYPE HASTELLOY ALLOY R-235

FORM	SHEET	
Condition Thickness-in	Sol Treat 1975°F Water Quench 0.021	Sol Treat 2200°F Water Quench 0.70
Tensile, Max psi	150,000	150,000
Yield, Max psi	95,000	95,000
RC-Max	27	25

INCONEL ALLOY 718. Steel Nickel Chromium Stainless Alloy. This is a relatively new alloy and heat treatment and fabrication procedures are still under development. It has good properties up to 1300°F, slow response to age-hardening and good ductility from 1200°-1400°F. It is readily welded in either the annealed or aged condition.

COMPOSITION RANGE

A1%	C%	Cr%	C1%+Ta%	Cu%	Mn%
0.4-1.0	0-0.1	17.0-21.0	4.5-5.75	0-0.75	0-0.50

Mo%	Ni%	Si%	Ti%	S%	Iron
2.0-4.0	50.0-55.0	0-0.5	.3-1.3	0-0.03	Balance

SPECIFICATION. None.

FORMS. Sheet, Strip, Bar, Investment Castings.

HEAT TREATMENT

Both single age and double age treatments may be employed, however, the latter is preferred for highest strength up to 1300°F. Solution treat rods, bars and forgings 1800°-1900°F. Somewhat higher creep rupture properties are obtained at the higher temperatures. Solution treat sheet at 1725°F. Single age anneal alloy at 1325°F 16 hours, air cool. Double age anneal alloy at 1325°F 8 hours, furnace cool, 20°F per hour to 1150°F air cool or 1325°F 8 hours, furnace cool, 100°F per hour to 1150°F, hold 8 hours, air cool. Both of

these double age treatments appear to give the same results.

TYPE INCONEL ALLOY 718

FORM	HOT ROLLED BAR 0.0500 IN DIA		
Condition	Anneal + Age		
	1800°F 1 hour + 1325°F		
	8 hour*	8 hour**	16 hour
Thickness - in Tensile PSI Yield PSI	0.500 211,000 174,000	 204,000 173,000	 193,000 154,000

*Furnace cool at temperature reduction of 100°F per hour to 1150°F hold 8 hours air cool.
** Furnace cool at temperature reduction of 20°F per hour to 1150°F air cool.

UDIMET 700. Highly Alloyed Nickel Base Corrosion Resistant. This alloy has higher elevated temperature tensile and stress-rupture strength than most wrought cobalt or nickel based alloys. It also has superior creep resistance, fatigue strength and high oxidation resistance. Welding is generally not recommended.

COMPOSITION RANGE

A1%	B%	C%	Cr%
3.75-4.75	0-025-0.035	0.03-0.1	14.0-16.0

Co%	Cu%	Iron	Mn%	Mo%	Si%
17.0-20.0	0-0.1	0-4.0	0-0.15	4.5-6.0	0-0.2

Ti%	Zr%	S%	Ni%
2.75-3.75	0-0.06	0-0.015	Balance

SPECIFICATIONS. None

FORMS. Bars, Billets, Castings, Forgings

HEAT TREATMENT

Solution annealing for castings 2075°-2125°F 2 hours air cool.
Solution annealing for forgings 2125°-2175°F 4 hours air cool.
Solution treat. 1950°-2000°F 4 to 6 hours, air cool.
Intermediate aging 1535°-1565°F 24 hours air cool.
Final aging 1385°-1415°F 16 hours air cool.
Hardens by aging and cold working.

RENE 41. Nickel Base Heat Treatable Stainless Alloy. This alloy possesses exceptional mechanical properties at temperatures up to 1800°F. It can be formed and also welded in the annealed condition. If cooled at a slower rate than specified, e.g. in less than 4 seconds from 2150°F to 1200°F, age hardening results and forming becomes difficult. Distortion is comparatively low if material is subsequently solution treated and water quenched. Best machinability is obtained in the fully aged condition after either oil or water quenching from solution treating temperature. This alloy may be fusion welded if copper and gas backing with a tight hold down is used. Start and finish should be made on metal tab of the same thickness using an inert gas atmosphere of 2 helium to 1 argon. Following the torch with a water spray reduces the hardness and produces maximum ductility in the weld and heat affected zones.

COMPOSITION RANGE

C%	Mn%	Si%	Cr%	Ti%	A1%
0.06-0.12	0-0.5	0-0.5	18.0-20.0	3.0-3.3	1.5-1.8

Mo%	B%	Co%	Iron%	Ni%
9.0-10.5	0-0.01	10.0-12.0	0-5.0	Balance

SPECIFICATIONS: None

FORMS: Sheet, Strip, Plate, Bar, Wire.

HEAT TREATMENT

For maximum formability 1950°-2150°F 30 minutes, water quench or cool from 2150° to 1200°F in 4 seconds maximum.
Solution treat 1950°-2150°F 30 minutes, quench or air cool.
Heat treatment for high short time strength: Solution treat 1950°F 30 minutes, cool to 1200°F in 4 seconds maximum + 1400°F, 16 hours.
Heat treat for good ductility and high creep rupture strength, solution treat 2150°F 30 minutes + 1650°F 4 hours. Hardenability: Alloy must be water quenched to retain soft solution treated conditions.

TYPE RENE 41

FORM	ALL	
Condition	2150°F air cooled	2150°F water quenched
Tensile Yield Rockwell Hardness	195,000 160,000 RC43	130,000 65,000 RB93

NICROTUNG. Nickel Base Corrosion Resistant Alloy. This is a nickel base investment casting alloy which is strengthened by addition of cobalt, aluminum and titanium. It has high creep strength and excellent oxidation resistance in the high temperature range 1500°-1800°F combined with good room temperature strength.

COMPOSITION RANGE

A1%	B%	C%	Cr%	Co%
3.75-4.75	0.02-0.08	0.08-0.13	11.0-13.0	9.0-11.0

Ti%	W%	Zr%	Ni%
3.75-4.75	7.0-8.5	0.02-0.08	Balance

SPECIFICATIONS. None

FORMS. Investment castings.

HEAT TREATMENT

Heat treatment is not recommended for this alloy. This material has "as-cast" hardness of RC38-40.

NIMONIC 105. Nickel-Cobalt-Chromium Corrosion Resistant Alloy. This alloy has excellent resistance to creep at very high temperatures. It is designed for use as turbine blades and rotors used in gas turbines. Corrosion resistance is good and resistance to oxidation under repeated heating and cooling is very good.

COMPOSITION RANGE

A1%	C%	Cr%	Co%	Cu%	Iron%
4.2-4.8	0-0.2	13.5-16.0	18.0-22.0	0-0.5	0-1.0

Mn%	Mo%	S1%	Ti%	Ni%
0-1.0	4.5-5.5	0-1.0	0.9-1.5	Balance

SPECIFICATION. None

FORMS. Sheet, Strip, Bar.

HEAT TREATMENT

For maximum stress-rupture life in range 1560°-1740°F, fully heat treat solution treat, and double age as follows: Solution treat 2102°F 4 hours, air cool. Double age 1922°F, 16 hours, air cool and 1526°F, 8 hours, air cool. Where stress rupture strength above 1562°F is not the important property, but tensile strength, elongation and impact strength up to 1292°F is desired, the following heat treatment is recommended.

Solution treat 2104°F, 4 hours, air cool.
Age 1562°F, 16 hours, air cool.

2-75. **MACHINING OF STEELS (GENERAL).**

2-76. There are five basic factors affecting machinability as related to steel:

a. The capacity and rigidity of the machine tool.

b. Cutting fluids.

c. Design composition and hardness of the cutting tool.

d. Cutting condition with respect to feeds and speeds.

e. The structure of the steel to be machined.

2-77. The cutting tool angles (back rake, side clearance, front clearance, and side rake) are highly important in the machining of metals. The range of values based on general practice for the machining of steel and steel alloys, are as follows:

a. Back rake angle, 8-16 degrees.

b. Side rake angle, 12-22 degrees.

c. Front clearance angle, 8-13 degrees.

d. Side clearance angle, 10-15 degrees.

2-78. Regardless of the material of which the cutting tool is made, the cutting action is the same. The main difference is the cutting speed. The carbon-steel tool cuts at low speed. The high-speed tool cuts at twice the speed of carbon-steel, the cast alloys at twice the speed of high-speed steel, and the sintered carbides at twice that of the cast alloys. The cutting speeds listed in Table 2-4 are approximate speeds using high-speed steel tools, and are to be used only as a basis from which proper speeds for a particular part may be calculated. These speeds are based on SAE 1112 steel, which is assigned a machinability rating of 100%. In order to obtain an approximate starting speed for different steels, select the type of operation, the width, depth or diameter of cut and obtain the recommended cutting speed for SAE 1112 from Table 2-3 then refer to Table 2-4 for the percent rating of the metal to be machined, and multiply the SFM value from Table 2-5 by the rating in Table 2-4. The result is the recommended surface feet per minute (SFM) for the cutting operation. For a known diameter and surface feet per minute (SFM) be used for an operation, the corresponding revolution per minute (RPM) can be obtained from Table 2-5.

2-79. The term cutting feed is used to express the axial distance the tool moves in each revolution. A course feed is usually used for roughing operations, and a fine feed for finishing operations. In general, the feed remains the same for different cutting tool steels, and only the speed is changed. Approximate cutting feeds are listed in Table 2-3. For tool corrections when improper machining on an operation is encountered, refer to Table 2-6 for recommended checks.

2-80. The use of a proper coolant (cutting fluid) often results in an increase of cutting speed for the same tool life, and also acts as a lubricant giving better cutting action and surface finish. Recommended cutting fluids for steels are lard oil, mineral oils, sulphurized oils, and soluble or emulsifiable oils.

Table 2-3. Cutting Speeds and Feeds for SAE 1112 Using Standard High Speed Tools

TOOL NAME	SIZE OF HOLE, IN.	WIDTH OR DEPTH OF CUT, IN.	SURFACE FPM	FEED IN./REV
Form Circular or Dovetail	--	Width - 0.500	165	0.0025
		Width - 1.000	160	0.0020
		Width - 1.500	160	0.0018
		Width - 2.000	155	0.0015
		Width - 2.500	150	0.0012
Twist Drills	0.250		105	0.0045
	0.500		105	0.005
	0.750		115	0.006
	1.000		115	0.007
	1.250		120	0.008
Box Tools Blade		Depth - 0.125	165	0.007
		Depth - 0.250	160	0.0065
		Depth - 0.375	155	0.0055
		Depth - 0.500	150	0.0045
Threading and Tapping	Over 25 Pitch		30-40	
	15 to 25 Pitch		20-30	
	Less than 15 Pitch		15-20	
Hollow Mills		0.062	150	0.010
		0.125	140	0.008
		0.187	135	0.007
		0.250	130	0.0065
Reamers	Under 1/2″		145	0.007
	Over 1/2″		145	0.010
Cut Off		Width - 0.062	165	0.002
		Width - 0.125	175	0.0025
		Width - 0.187	180	0.0025
		Width - 0.250	190	0.003

Table 2-4. Machinability Rating of Various Metals

SAE DESIGNATION	RATING %	BRINELL HARDNESS	
1010	50	131-170	
1015	50	131-170	
1020	65	137-174	
1022	70	159-192	
1025	65	116-126	
1035	65	174-217	
1040	60	179-229	
1045	60	179-229	
1050	50	179-229	
1055	55	192-197	
1060	60	183-201	

Table 2-4. Machinability Rating of Various Metals - Continued

SAE DESIGNATION	RATING %	BRINELL HARDNESS	
1070	45	183-241	
1080	45	192-229	
1095	42	197-248	
1112	100	179-229	
1117	85	143-179	
1137	70	187-229	
2317	55	174-217	
2330	50	179-229	
2340	45	187-241	
2515	30	179-229	
3115	65	143-174	
3140	55	187-229	
3310	40	170-229	
4037	65	170-229	
4130	65	187-229	
4135	64	170-229	
4137	60	187-229	
4140	66	179-197	
4150	50	187-235	
4337	50	187-241	
4340	45	187-241	
4615	65	174-217	
4620	62	152-179	
4640	55	187-235	
5210	30	183-229	
6150	50	197	
8615	67	170-217	
8617	63	170-217	
8620	60	170-217	
8630	65	179-229	
8640	60	179-229	
8735	55	179-229	
8740	60	179-229	
9260	45	187-255	
9262	45	187-255	
9310	40	207-217	

Table 2-5. Conversion of Surface Feet Per Minute (SFM) To Revolutions Per Minute (RPM)

DIAMETER	SURFACE FEET PER MINUTE												
IN INCHES	10	15	20	25	30	40	50	60	70	80	90	100	110
1/16	611	917	1222	1528	1823	2445	3056	3667	4278	4889	5500	6111	6722
1/8	306	458	611	764	917	1222	1528	1833	2139	2445	2750	3056	3361
3/16	204	306	407	509	611	815	1019	1222	1426	1630	1833	2037	2241
1/4	153	229	306	383	458	611	764	917	1070	1222	1375	1528	1681
5/16	122	183	244	306	367	489	611	733	856	978	1100	1222	1345
3/8	102	153	204	255	306	407	509	611	713	815	917	1010	1120
7/16	87	131	175	218	262	349	437	524	611	698	786	873	960
1/2	76	115	153	191	229	306	382	458	535	611	688	764	840
9/16	68	102	136	170	204	272	340	407	475	543	611	679	747
5/8	61	92	122	153	183	244	306	267	428	489	550	611	672
11/16	56	83	111	139	167	222	278	333	389	444	500	556	611
3/4	51	76	102	127	153	203	255	306	357	407	458	509	560
13/16	47	71	94	118	141	188	235	282	329	376	423	470	517
7/8	44	65	87	109	131	175	218	262	306	349	393	436	480
15/16	41	61	81	102	122	163	204	244	285	326	367	407	448
1	38	57	76	96	115	153	191	229	267	306	344	382	420
1 1/8	34	51	68	85	102	136	170	204	238	272	306	340	373
1 1/4	31	46	61	76	92	122	153	183	214	244	275	306	336
1 3/8	28	42	56	69	83	111	139	167	194	222	250	278	306
1 1/2	25	38	51	64	76	102	127	153	178	204	229	255	280
1 5/8	24	35	47	59	70	94	117	141	165	188	212	235	259
1 3/4	22	33	44	55	65	87	109	131	153	175	196	218	240
1 7/8	20	31	41	51	61	81	102	122	143	163	183	204	224
2	19	29	38	48	57	76	95	115	134	153	172	191	210
2 1/4	17	25	34	42	51	68	85	102	119	136	153	170	187
2 1/2	15	23	31	38	46	61	76	92	107	122	137	153	168
2 3/4	14	21	28	35	42	56	69	83	97	111	125	139	153
3	13	19	25	32	38	51	64	76	89	102	115	127	140

DIAMETER	SURFACE FEET PER MINUTE												
IN INCHES	120	130	140	150	160	170	180	190	200	225	250	270	300
1/16	7334	7945	8556	9167	9778	10390	11000	11612	12223	13751	15279	16807	18334
1/8	3667	3973	4278	4584	4889	5195	5500	5806	6111	6875	7639	8403	9167
3/16	2445	2648	2852	3056	3259	3463	3667	3871	4074	4584	5093	5602	6112
1/4	1833	1986	2139	2292	2445	2597	2750	2903	3056	3438	3820	4202	4584
5/16	1467	1589	1711	1833	1956	2078	2200	2322	2445	2750	3056	3361	3667
3/8	1222	1324	1436	1528	1630	1732	1833	1935	2037	2292	2546	2801	3056

DIAMETER IN INCHES	SURFACE FEET PER MINUTE												
	120	130	140	150	160	170	180	190	200	225	250	270	300
7/16	1048	1135	1222	1310	1397	1484	1572	1659	1746	1964	2183	2401	2619
1/2	917	993	1070	1146	1222	1299	1375	1451	1528	1719	1910	2101	2292
9/16	815	883	951	1019	1086	1154	1222	1290	1358	1528	1698	1867	2037
5/8	733	794	856	917	978	1039	1100	1161	1222	1375	1528	1681	1833
11/16	667	722	778	833	889	945	1000	1056	1111	1250	1389	1528	1667
3/4	611	662	713	764	815	866	917	968	1019	1146	1273	1401	1528
13/16	564	611	658	705	752	799	846	893	940	1058	1175	1293	1410
7/8	524	567	611	655	698	742	786	829	873	982	1091	1200	1310
15/16	489	530	570	611	652	693	733	774	815	917	1019	1120	1222
1	458	497	535	573	611	649	688	726	764	859	955	1050	1146
1 1/8	407	441	475	509	543	577	611	645	679	764	849	934	1019
1 1/4	367	397	428	458	489	519	550	581	611	688	764	840	917
1 3/8	333	361	389	417	444	472	500	528	556	625	694	764	833
1 1/2	306	331	357	382	407	433	458	484	509	573	637	700	764
1 5/8	282	306	329	353	376	400	423	447	470	529	588	646	705
1 3/4	262	284	306	327	349	371	393	415	437	491	546	600	655
1 7/8	244	265	285	306	326	346	367	387	407	458	509	560	611
2	229	248	267	287	306	325	344	363	382	430	477	525	573
2 1/4	204	221	233	255	272	289	306	323	340	382	424	467	509
2 1/2	183	199	214	229	244	260	275	290	306	344	382	420	458
2 3/4	167	181	194	208	222	236	250	264	278	313	347	382	417
3	153	166	178	191	204	216	229	242	255	286	318	350	382

Table 2-6. Tool Correction Chart

A. TOOL CHATTER

Check: 1. Tool overhand (reduce to minimum)

2. Work Support (eliminate vibration)
3. Nose radius (too large a radius may cause chatter)
4. Tool clearance (be sure end cutting edge angle is sufficient)
5. Feed (increase feed if too light a feed has tendency to rub rather than cut)
6. Tool load (vary side cutting edge angle to correct improper load)
7. Chip breaker (widen breaker if chips are too tight.)

Table 2-6. Tool Correction Chart - Continued

B. CHIPPING OF CUTTING EDGE Check: 1. Edge sharpness (Hone or chamber slightly) 2. Chip Breaker (widen breaker if tight chip causes chipping) 3. Speed (Increase) 4. Coolant (Heating and cooling of tip may cause chipping)
C. RAPID TOOL WEAR Check: 1. Feed (Increase) 2. Speed (Low and excessive speeds cause tool wear) 3. Relief angles (clearance may not be sufficient) 4. Nose radius (decrease size)
D. UNSATISFACTORY FINISH Check: 1. Speed (rough finishes can be eliminated by increasing speed) 2. Nose radius (too large a nose radius mats finish)

2-81. MACHINING CORROSION RESISTING STEEL.

2-82. The corrosion resisting steels, especially the 18-8 grades, are more difficult to machine than the carbon steels and most other metals. Even though they are more difficult to machine, the same general methods are used with modification/compensation for the individual characteristics of each type or grade. To improve machining characteristics of some types, their chemical content is modified by adding selenium (Se) and sulfur (S). The modified alloys which are usually designated by a suffix to type number such as 430 F or Se. Exceptions are types 416 and 303.

2-83. For comparison and as a general guide to the machining characteristics of free machining screw stock grade B1112 as an 100% machinable "norm." This table is only intended as a starting point and is not intended to replace any information accumulated through experience or other available data.

Table 2-7. General Machining Comparison of Corrosion Resisting Steel To Free Machining Screw Stock B1112

GRADE/TYPE	MACHINABILITY RATING	GRADE/TYPE	MACHINABILITY RATING
Group I 430F	80%	Group III 420	45%
416	75%	431	45%
420F	70%	440	45%
303	65%	442	45%
		446	45%
		347	40-45%
Group II 403	55%	Group IV 302	40%
410	50%	304	40%
430	50%	309	40%
440F	50%	316	40%

2-84. In machining of the corrosion resisting steels, difficulty will be experienced from seizing, galling and stringing. To overcome these problems requires control of speeds, cutting tools, and lubricants. The following general practices are recommended for shaping/grinding cutting tools, equipment, etc., for cutting corrosion resisting steel:

a. Select tools of proper alloy/type and keep cutting edges sharp, smooth, free of burrs, nicks and scratches.

b. Avoid overheating cutting tool when grinding to prevent surface and stress cracking.

c. Grind tools with generous lip rake and with ample side and front clearance.

d. Speeds are critical in machining stainless; select speed about 50% slower than those used for carbon steels as a starting point.

e. In general, use slow speeds and heavy feed to reduce effect of work hardening. Avoid riding of tool on work and intermittent cutting when possible.

f. Apply proper lubricant/coolant to cutting tool to prevent overheating.

g. Support cutting tool rigidly near work to prevent lash and other difficulty from use of heavy cutting feeds.

2-85. Cutting Tools for Machining Corrosion Resisting Steels. Selection of cutting tool is important for machining stainless due to tough machining characteristics. The following is a recommended guide for selection of tools:

a. For general machining and short runs use high speed tool steels such as Tungsten Type T1 (18-41) and Molybdenum-Tungsten Type M3 (6-6-3).

b. For medium runs at approximately 25% higher speed, use Tungsten-Cobalt Type T5 (18-4-2-8) and Tungsten-Cobalt Type T4.

c. For long production runs at high speed, use Tungsten Carbides. Cutting tool of these alloys can be used at approximately 100% faster speeds than the Tungsten-Cobalt type.

NOTE

Some types of tool steel are available in raw stock in accordance with Federal Specifications, see paragraph 7-4. Prior to attempting local manufacture of cutting tools, facilities/equipment must be available to properly heat treat. In addition, from an economic standpoint, it is usually advisable to obtain most cutting tools prefinished to size, etc., and heat treated.

2-86. TURNING OF THE CORROSION RESISTING STEELS.

2-87. Tools for turning the corrosion steels should be ground with a heavy side rake clearance for maximum cut freedom. The upper surface of the tool should be finished with a fine wheel or hand stoned to prevent galling. For chip disposal or breakage a chip grove is usually necessary except with the free machining grades. In addition, the chip breakage is a safety precaution to prevent difficulty and hazards in breaking the expelled cutting. Do not allow tools to become dull to prevent surface hardening from rubbing and hard spots which are difficult to remove.

Table 2-8. Suggested Cutting Speeds and Feeds

ALLOY TYPE/GRADE	FEED INCH 1/	CUTTING SPEED SURFACE FT.PER MIN	OPER	TOOL MATERIAL
302, 304, 309, 310, 314, 316	0.020-0.040	20-40	Rough	High Speed Steel
	0.008-0.015	50-80	Finish	High Speed Steel
	0.020-0.040	40-60	Rough	Tungsten-Cobalt
	0.008-0.015	90-110	Finish	Tungsten-Cobalt
	0.010-0.030	150-200	Rough	Carbide

Table 2-8. Suggested Cutting Speeds and Feeds - Continued

ALLOY TYPE/GRADE	FEED INCH 1/	CUTTING SPEED SURFACE FT.PER MIN	OPER	TOOL MATERIAL
	0.008-0.018	150-300	Finish	Carbide
420, 431, 440, 442, 446, 347, 321	0.015-0.040	20-40	Rough	High Speed Steel
	0.008-0.018	55-90	Finish	High Speed Steel
	0.015-0.040	40-80	Rough	Tungsten-Cobalt
	0.008-0.018	100-130	Finish	Tungsten-Cobalt
	0.015-0.030	165-220	Rough	Carbide
	0.005-0.015	165-330	Finish	Carbide
430F, 416	0.015-0.040	30-60	Rough	High Speed Steel
	0.008-0.018	75-120	Finish	High Speed Steel
	0.015-0.040	60-105	Rough	Tungsten-Cobalt
	0.005-0.015	135-180	Finish	Tungsten-Cobalt
	0.010-0.030	225-300	Rough	Carbide
	0.005-0.015	225-450	Finish	Carbide
420F	0.015-0.050	25-55	Rough	High Speed Steel
303	0.005-0.015	65-105	Finish	High Speed Steel
	0.020-0.050	50-90	Rough	Tungsten-Cobalt

Table 2-8. Suggested Cutting Speeds and Feeds - Continued

ALLOY TYPE/GRADE	FEED INCH 1/	CUTTING SPEED SURFACE FT.PER MIN	OPER	TOOL MATERIAL
	0.005-0.015	100-155	Finish	Tungsten-Cobalt
	0.010-0.030	175-240	Rough	Carbide
	0.005-0.015	195-350	Finish	Carbide
NOTE: 1/ Feeds cited are based on turning 1 inch stock or larger. Feeds for smaller sizes should be reduced proportionally to size of material being turned.				

Table 2-9. Tool Angles - Turning

TOOL ANGLES	HIGH SPEED TOOL STEEL	COBALT	CARBIDE
Top Rake	5°–10°	5°–10°	–5°–8 °
Back Rake (side)	4°–10°	8°–15°	6°–12°
Side Clearance	5°–8°	6°–10°	6°–10°
End Relief	4°–10°	4°–10°	4°–10°
Side Cutting Lead	5°–15°	4°–12°	3°–12°
Front Clearance	7°–10°	7°–10°	5°–10°

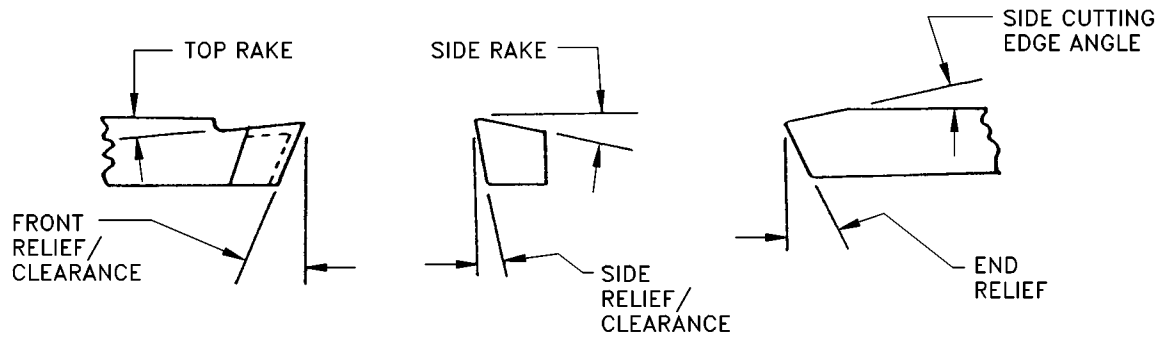

L9805651

NOTE

In grinding chip breakers, allow for chip to clear work or rough finish will result.

2-88. The softer condition of stainless is not necessarily the easiest to cut. It is generally preferable that material be moderately hardened (Brinell 200-240) for best machining. Another factor requiring consideration in machining stainless is high co-efficient of thermal expansion which will necessitate adjusting (slacking off) centers as material heats up.

2-89. The recommended cutting speeds, tool angles and feeds for turning corrosion resisting steel are cited in Tables 2-8 and 2-9.

2-90. MILLING CORROSION RESISTING STEEL. The same general procedures/equipment are used in working stainless as those used with carbon steel. However more power and rigid support of tool is required to accomplish cutting due to inherent strength and toughness of the various stainless alloys.

2-91. In milling the corrosion resisting steel, difficulty will be experienced from heat build-up. Heat conduction of the chromium-nickel grades is about 50% slower than the carbon steels. This problem can be controlled in most cases by adjusting cutting speeds, tool angles, method of grinding, and use of proper lubricants in adequate quantities. In close tolerance work, controlling of heat build-up is of utmost importance to meet dimensional requirements.

2-92. Cutters for Milling. High speed tool steel is used for most milling on stainless. The other grades are used under certain conditions, such as cemented carbides; however, capacity of equipment and cost of tooling for specific uses requires consideration.

2-93. All the standard cutter designs used for cutting carbon steel can be used to cut stainless but preferred design is those with helical (spiral) teeth. The use of helical cutter minimizes vibration and chatter especially when cutter/cut exceeds 1 inch. Chip removal and loading of cutter can be aided when milling slots by staggering teeth to cut successively on alternate sides and half the bottom.

2-94. Cutter lands should be ground to narrow width (0.020 to 0.025) with clearance (3°-10° primary angular) behind cutting lip to reduce frictional heat resulting from rubbing. The exact amounts the land is ground will depend on diameter of cutter, material hardness, grade, etc. However, in grinding the lands, care should be taken to avoid unnecessary weakening of support for cutting edge. As a further measure against rubbing, a secondary clearance of 6°-12° starting at the back of the land is recommended. On side cutter, angular clearance of 3° to 10° to avoid frictional heat and rubbing is recommended.

CAUTION

Before starting operation/equipment, carefully check for proper set up, safety, rigid support of work and cutters, running condition of equipment, and flow of coolant/lubrication. Once cutting is started, it should be carried to completion to avoid the effects of changes in metal temperature. Naturally the continuous operation will depend on satisfactory operation of equipment and other factors.

2-95. The recommended cutting speeds, tools, angles, and feeds for milling are cited in tables 2-10 and 2-11. The information in these tables is only provided as a starting point, or as a guide.

Table 2-10. Suggested Milling Cutting Speeds and Feeds

ALLOY TYPE/GRADE	FEED INCH 1/	SPEED SFPM	TOOL MATERIAL
301, 302, 304, 309, 310, 314, 316, 321, 347, 17-4PH, 17-7PH, 420, 431, 440, 442, 446	0.002-0.005	35-70	High Speed Steel
	0.002-0.007	30-95	High Speed Steel
403-410, 430	0.002-0.008	35-90	High Speed Steel
440F	0.002-0.008	35-70	High Speed Steel
303	0.002-0.008	50-100	High Speed Steel
430F, 416	0.002-0.006	50-130	High Speed Steel
420F	0.002-0.006	35-80	High Speed Steel

1/ Use heavy feeds for rough cuts and light feeds for finishing.

Table 2-11. Suggested Tool Angles - Milling

TOOL ANGLES	TOOL MATERIAL HIGH SPEED STEEL	CEMENTED CARBIDE/C	ALLOY
Rake Radial 1/	10°-20°	Use lower angle	
Rake Axial 1/	30°-50°	Use lower angle	
Clearance	4°-8°	Approximately same	
Land Width	1/64″-1/16″	Approximately same	

1/ Saws, form relieved cutters, and miscellaneous profile cutters, etc., are sometimes used with rake angle as low as 0 degrees.

2-96. Lubrication for Milling. The lubrication of milling cutter is very important to control generation of heat which is considerable in cutting all grades of stainless, and to prevent seizing of chips to cutting edges. The cutting oils used should be applied in large quantities directly on the cutter and zone of cut. The sulphurized oils diluted to desired viscosity with paraffin oil are usually satisfactory.

2-97. DRILLING CORROSION RESISTING STEEL. High speed steel drills are commonly used for drilling stainless. Special types are used for drilling grades (420, 440, etc.) that are abrasive due to high carbon content. Speeds for drilling the high carbon types are usually reduced 25-50%o in comparison to the other grades.

2-98. Drills for use with the corrosion resisting steels are prepared with different cutting angles than used with carbon steel. Drill point/tips for use with the chromium-nickel grades are usually ground with 135°-140° (included) angle and 8°-15° lip clearance. The webb support for the point should be as heavy as possible; however, thinning of the webb at the point will relieve point pressure. When drilling the free machining 400 series grades the angle is reduced to 118°-130°. For general illustration of point designs see Figure 3-2.

2-99. Speeds used for drilling the corrosion resisting steels should be closely controlled to prevent hardening of metal and excessive drill damage from heat. For suggested drilling speed using high speed steel drill bits, see Table 2-12.

Table 2-12. Drilling Speeds for Corrosion Resisting Steel

GRADE TYPE	SPEED SFPM (APPROX)
301, 302, 304, 310	20 - 40
303	40 - 80
309, 316, 321, 347	30 - 50
403, 410	35 - 75
416, 420F, 430F	60 - 95
420 AB & C	20 - 40
442, 446	30 - 60

NOTE

Do not let drill ride on work to prevent work hardening and heat damage to drill. On larger diameter drills use chip curling grooves to help expel and prevent chip accumulation in area of hole being drilled.

2-100. Lubrication for Drilling Stainless. The recommended lubrication for general use and light drilling is soluble oil, and for heavy work, sulphurized mineral or fatty oils. Utilization of adequate lubrication/ coolant is of utmost importance in drilling stainless due to poor heat conduction of this material.

2-101. REAMING CORROSION RESISTING STEEL. The recommended reamer for the corrosion resisting steels is the spiral fluted type which is made from high speed steel/carbide tipped. These spiral fluted reamers are used to help alleviate chatter and chip removal that are associated with the straight fluted reamers.

2-102. Due to the work hardening characteristics of the corrosion resisting steel, it is advisable to leave sufficient stock to insure that cutting will occur behind the work hardening surface resulting from drilling. The recommended material to be left for reaming is 0.003-0.007 inch, and feed per revolution should be 0.003-0.005 for holes up to 1/2

inch and 0.005-0.010 for reamers up to 1 inch diameter.

2-103. Reamers for cutting stainless should have a 26°-30° starting chamfer with a slight lead angle behind the chamfer of 1°-2° for about 1/8-3/16 inch on the land to reduce initial shock of cutting. The land should be ground with a clearance of 4°-7° (and width should not be reduced below 0.010-0.012 inch) to reduce rubbing and frictional heat.

2-104. Speeds for reaming will vary according to type of material being cut. The recommended speed for reaming types 301, 302, 304, 316, 321, 347, 403 and 410 is 20 - 75 surface feet per minute; for 430F, 420F, 416, 440F and 303 --35 - 100 SFPM; and for 309, 310, 430, 431, 440, 442, 426 - 20-60 SFPM. Trial should be conducted to determine best cutting for indivldua1 operations.

2-105. TAPPING CORROSION RESISTING STEEL. Conventional or standard type taps are used with stainless; however, better results can sometimes be obtained by modification of taps (in shop) as required and by use of two fluted type taps for small holes. For instance modification of taps can be accomplished by grinding longitudinal grooves along the lands, omission of cutting edges on alternate threads and relieving cutting edges will reduce binding and frictional drag. These modifications will also aid in distribution of lubrication to cutting area, provide additional clearance for chips and compensate for the swelling which is encountered with the softer temper material. The modification is usually accomplished as follows:

a. Longitudinal grooves are ground down the center of each land about 1/3 to 1/2 thread depth and 1/3 to 1/2 approximately of land width.

b. Cutting edges are relieved by grinding a 2°-5° radial taper on each land.

c. Lands are narrowed by removing about half the threading area from each land. The portion removed should trail the foremost cutting edge. Also, cutting edge should be ground to have positive hook/rake 15°-20° for softer material and 10°-15° for harder material.

Table 2-13. Tapping Allowances (Hole Size to Screw Size)

THREAD/SCREW SIZE	MAJOR DIA.	MINOR DIA.	DRILL SIZE DECIMAL & NR	THREAD DEPTH PERCENT
4-40	0.1120	0.0871±0.002	0.0810-46	95
			0.827-45	90
			0.0860-44	80
			0.0890-43	71
			0.0960-41	49
6-32	0.1380	0.1100±0.004	0.0995-39	95
			0.1040-37	83
			0.1100-35	72
			0.1160-32	54
6-40	0.1380	0.1144±0.0035	0.1065-36	97
			0.1130-33	77
			0.1200-31	65
8-32	0.1640	0.1342±0.004	0.1250-1/8″	96
			0.1285-30	87
			0.1360-29	69
			0.1405-28	57

Table 2-13. Tapping Allowances (Hole Size to Screw Size) - Continued

THREAD/SCREW SIZE	MAJOR DIA.	MINOR DIA.	DRILL SIZE DECIMAL & NR	THREAD DEPTH PERCENT
10-32	0.1900	0.1593±0.003	0.1520-24	93
			0.1562-5/32″	83
			0.1610-20	71
			0.1660-19	59
			0.1695-18	50
1/4-20	0.2500	0.2010±0.005	0.1850-13	100
			0.1875-3/16″	96
			0.1935-10	87
			0.1990-8	78
			0.2090-4	63
1/4-24	0.2500	0.2143±0.003	0.1960-9	100
			2031-13/64″	86
			0.2090-4	75
			0.2130-3	68
1/4-28	0.2500	0.2193±0.002	0.2090-4	88
			0.2130-3	80
			0.2187-7/32″	67
5/16-24	0.3125	0.2708±0.0032	0.2610-G	95
			0.2656-17/64″	86
			0.2720-1	75
			0.2770-J	65
3/8-24	0.3750	0.3278±0.002	0.3281-2 1/64″	86
			0.3320-Q	70
			0.3390-R	66
1/2-24	0.5000	0.4579±0.003	0.4531-29/64″	86
			0.4687-15/32″	57

2-106. In addition to the above, the tap basically should have a taper/chamfer of about 9° with center line on the starting end to facilitate entry into hole. The taper should be held short (1st thread) for blind holes, and on through holes, it may extend over 3 or 4 threads

2-107. Due to high strength and poorer cutting quality of the stainless series steels, holes for tapping are usually made as large as possible consistent with fit specified by drawing or other data. Actually due to the higher strength of this material less thread area or engagement is required in comparison to most other metals. Due to the above and the fact that less cutting is required, 75% thread depth is generally used as maximum

unless otherwise specified. Higher percentages of thread depth are necessary in material when stock is not thick enough to permit the required number of thread. For tapping allowances of some size screws/bolts see Table 2-13.

2-108. The decreased thread depth also reduces tendency to gall and seize, power required to drive tap, tap wear, and effect of swelling in soft material.

2-109. Tapping Speeds Corrosion Resisting Steel. Tapping speeds used for stainless should be slower than those used for carbon steel. The 18-8 (300 series) are usually tapped at 10-25 SFPM except for the free machining types which are tapped at 15-30 SFPM. The straight-chromium 400 series generally is tapped at 15-25 SFPM, except the free machining grades, which are tapped at 15-35 SFPM.

2-110. Lubrication for Tapping. The lubrications recommended for tapping are sulphurized mineral oils with paraffin and lard oil. The lubricant serves to prevent overheating as well as lubrication, and if applied under pressure, aids in chip removal. Oil flow/application should be applied before tapping commences to prevent initial congestion of cuttings.

2-111. SAWING.

2-112. Hack saws (hand) for cutting corrosion resisting steel should be of high speed steel with approximately 32 teeth per inch for light work and approximately 24 teeth per inch for heavy work. The teeth area should be of wavy construction to increase width of cut area to prevent binding. As with cutting other metal, the blade should not be allowed to drag/ride on the return stroke, especially with the 300 series types to prevent work hardening. The hack saw blade should be lightly lubricated with lard oil/other cutting oil for best results.

2-113. Hack saws (mechanical drive). Power hack saws are used for heavy cross-cutting section bars, tubing, etc. With the power hack saw, deeper cuts are made at relatively low speed. The deeper cuts are used to get under work hardened surface resulting from previous cut (stroke). The teeth per inch for saw blades average 8-12 and speed of saw travel usually ranges from 50-100 feet per minute depending on type and temper of material being cut. Coolant/lubrication is essential to prevent excess blade damage from heat. Lubrication recommended is soluble oil/water mixed about 1 part oil to 4 parts water for heavy work, and for light work, a light grade cutting oil.

2-114. Band Sawing. Band saws are well suited for low speed (straight line/contour) sawing of stainless/corrosion resisting steel within prescribed limitation. The saw manufacturer's recommendations should be followed for cutting speed, saw selection, etc. However, speeds usually vary with the physical properties, temper, etc., of type/grade being cut. As general guide, speeds range from 100-125 feet per minute for material under 0.062 and 60-100 FPM for thickness over 0.062 inch. Saw blades must be kept in sharp condition for effective low speed sawing.

2-115. For faster cutting with the band saw, the friction cutting method may be employed. In utilizing the friction method, the band saw velocity ranges from 5000 FPM for cutting flat 1/32 inch material to about 10,000 FPM for 1/2 inch and 14,000 for 1 inch material; tubing material is run at slightly higher speed. Feed for this method can be considerably higher than is used for slow speed cutting, rates range from about 100 FPM for light gauge to 15-18 FPM for 1/2 inch material. Saw teeth per inch varies from 18 for material below 1/ 8 inch thick to 10 per inch for thicknesses over 1/2 inch.

2-116. Heavy pressure to maintain cut is not usually necessary. Pressure should be just sufficient to create proper heating and softening at cut point without forcing the saw. Lubricants should not be used.

Paragraph 2-117 through 2-227 deleted.
Tables 2-14 through 2-33 deleted.
Figures 2-2 and 2-3 deleted.
Pages 2-75 through 2-120 deleted.

2-228. (Deleted)

2-229. (Deleted)

2-230. (Deleted)

2-231. (Deleted)

2-232. (Deleted)

2-233. (Deleted)

2-234. **FABRICATION OF FERROUS ALLOYS.** The information furnished in this section is provided as a guide to aid personnel engaged in the use and application of the ferrous alloys. Due to varied usage of steel products, details and rules related will not fit every application. In many instances, experimentation trial and further study will be required.

2-235. Personnel assigned to accomplish designs, application and fabrication must be well trained in fundamentals of metal forming practices, analysis, properties, corrosion control, machining, plating, welding, beat treat, riveting, painting, blue print reading, assembly, etc., in accordance with scope of relation to fabrication process. Also, these personnel must keep constantly abreast of advancing processes for maximum efficiency/proficiency.

2-236. The section of steel for design or application to equipment and component is usually based on the following:

a. Strength and weight requirement of part/equipment to be fabricated.

b. Method to be used for fabrication, i.e., welding, forming, machining, heat treat, etc.

c. Corrosion resistance to certain chemicals/environments.

d. Temperatures to which part will be subjected.

e. Fatigue properties under cyclic loads, etc.

2-237. The following general rules should be employed in handling and forming:

a. Sheet, sheared/sawed strips and blank shall be handled with care to prevent cutting and other parts of the body.

b. Sheared or cut edges shall be sanded, filed, or polished prior to forming. The removal of rough and sharp edges is also recommended prior to accomplishing other machining operations to reduce hazards in handling.

c. Form material across the grain when possible using correct or specified bend radii. Also provide bend relief in corner when required.

d. Observe load capacity of equipment such as brakes, presses, rolls, drills, lathes, shears, mills, etc.

CAUTION

Machines rated for carbon steel shall not be used over 60% of rated capacity when cutting, forming or machining stainless steel unless approved by responsible engineering activity. When in doubt inquire.

e. Tool and equipment shall be maintained smooth, free of nicks, rust, burrs and foreign material. In addition to above, dies, ways, etc., shall be checked for alignment tolerances, etc., periodically/ each set-up.

f. Surfaces of material, especially finished sheet, shall be protected from scratching, foreign particles, etc. These surfaces can be protected using non-corrosive paper, tape, other approved material and good cleaning procedures. Polished sheet material should be protected when forming to prevent die tool marking.

g. After forming/machining is completed, remove all cutting lubrication, etc., by cleaning, degreasing, pickling, prior to any heat treat, plating or painting process.

CAUTION

Avoid handling parts, especially corrosion resistant steel, with bare hands after cleaning and subsequent to heat treating/ passivation because finger prints will cause carburization and pitting of surface, when heated.

2-238. BENDING (SINGLE CURVATURE). The bending of most steel sheet and thin bar stock can be readily accomplished provided that equipment with adequate bending and cutting capacity is available and if the materials are formed in the soft condition/lower temper range. The heat treatable alloys are usually formed in the annealed or normalized condition and heat treated if required/ specified after forming. Some difficulty will be encountered from warping due to treat treating and precautions must be taken when forming the material to prevent sporadic or uneven stress in the work piece. Also, parts will require jigs or close control during the heating and cooling phase of heat treatment. The use of heat treated formed sheet metal parts on aerospace craft are usually an exception in part due to above and most materials are used in the normalized or annealed condition.

2-239. Springback allowance will vary according to the type and temper of material being formed. The use of sharp bend radii on parts for aeronautical application shall be avoided and other application where the parts will be subjected to flexing (cycle) or concentrated stresses, due to possible fatigue or stress corrosion failure. For recommended General Bend Radii for use on Aerospace weapon/equipment (see Table 2-34 for Low Carbon/low alloy steel and Table 2-35 for Corrosion Resistant Steel.)

2-240. In utilizing Table 2-34 and Table 2-35 it is recommended that in practice bend area be checked for strain, grain, or bend cracking. If parts show presence of above, increase radius by one thickness or more until difficulty does not exist. Other details, inspection requirements, etc., shall be used when specified.

2-241. DRAW FORMING. Control of die design, and material from which dies are made, are essential to successfully draw form steel. For long production runs, high carbon, high chromium steel is recommended to manufacture drawing dies because of wear resistance and hardness. For medium and short production runs, Kirksite/case zinc alloy can be used with drop hammer hydraulic press if the draw is not severe. Hardwood and phenolic can be used in some cases for piece production where draws are shallow.

2-242. Successful drawing of steel will depend on:

a. Radii used for forming or bending. Use moderate radii, usually equal to 3-6 times thickness of material depending on specific requirements, and the severity of draw.

b. Finish of die-all scratches and surface roughness should be removed.

c. Blank hold down pressure and drawing rings. Hold down pressure should be sufficient to prevent wrinkling of material, but not to the extent that would prevent flow of the metal into

the female portion of the die. Drawing rings radii should be 4-8 times metal thickness and smoothly polished.

d. Clearance between punch and die - Generally punch clearance should be about 1 1/4 to 1 1/2 times thickness for the initial draws, and about 1 1/8 to 1 1/4 times for the following draws. If parts show signs of galling, clearance (drawing) should be increased when clearance is increased, size requirement must be considered.

e. Temper-drawing should be started with annealed/normalized material and intermediate annealing accomplished as required. The requirement for annealing (intermediate) usually is needed after reduction exceeds 30-35% for stainless/20-25% carbon steel on the initial draw, and when reduction exceeds 8-15% on each following draw. Parts should be cleaned removing all lubrication and other contaminate prior to annealing and desealed after annealing. In instances where draws exceed 22-25% annealing is recommended after completion of the drawing operation followed by descaling and passivation (stainless). Restriking on final stage die to remove distortion after final anneal is permissible without further heat treatment.

f. Drawing Speed - Generally a speed of 20-55 feed per minute is satisfactory. Drawing using a hydraulic powered press in lieu of a cam operated or toggle type press is usually the most satisfactory,

g. Lubricant - Compounds used should be of heavy consistency capable of withstanding high temperature and restating pressure necessary to form material. One heavy bodied lubricant used is lard oil, sulfur (one pound of sulfur to 1 gallon of oil) to which lithopone is added in equal parts until consistency equals 600W engine grease, or as desired. Other compounds such as tallow, mixture of mineral oil and soft soap, powdered graphite mixed to thin paste with lightweight oil can be used.

h. Blank size and preparation - A good practice is to use minimum size required to meet dimensional size of parts and for hold down. When trimming, consideration must be given to the fact that on rectangular parts, the majority of drawings will occur on wider portions of the rectangle away from the corners. To overcome this problem, the radius of the vertical corner should be approximately 10% of the width. Trial, using a very ductile material to determine blank size and stress areas prior to starting the forming operation is recommended. After size is determined by trial, etc., the blank should be filed/polished to prevent cracking in wrinkle/stress areas, handling hazard and surface friction which hinders flow of metal into die.

2-243. The surface condition of the blank also has an effect on drawing. A slightly roughened surface, such as obtained by pickling (dull surface) improves control of metal under hold down pads and the holding lubricants. On the other hand, the roughened surface may be less desirable because of greater friction, especially where free flowing drawing methods are used (without hold down).

2-244. Where facilities are available, cold forming of some steels (primarily straight chromium stainless such as 410, 416,430, 442, 446) can be improved by preheating dies and blanks. The preheating tends to reduce work hardening and the requirement for intermediate annealing during the drawing operation.

2-245. When forming involves more than one draw, the first operation should be a moderate draw with punch diameter equal to 60% of blanks diameter and reduction of 15-25%. The second and subsequent draws should be made with punches about 20%. It is recommended that part be cleaned and annealed following each draw. Excessive distortion may result from final annealing after last draw. This problem can be overcome in most instances, by reducing the severity of the last draw or restriking after final annealing on last stage die for the purpose of removing distortion.

CAUTION

Parts shall be cleaned of all contaminates, lubrication, filing, other foreign material, etc., before heating or annealing and upon completion of forming or drawing operation. Failure to clean the parts will result in pitting and carburization, which will damage the surface.

2-246. STRETCH FORMING. Stretch forming is a process where material, sheet or strip, is stretched beyond the elastic limit until permanent set will take with a minimum amount of springback.

2-247. The stretch forming is usually accomplished by gripping ends of material (blank) and applying force by a separate ram carrying the forming die. The ram pressure sufficient to cause the material to stretch and wrap to contour of the die form blank is applied perpendicular to the blank (see Figure 2-4). This method of forming is

usually limited to parts with large radii of curvature and shallow depth, such as shallow dishing, reverse curves, and curved pan shaped parts containing flat areas.

2-248. The trimming of edges and removal of nicks and scratches is important to prevent starting points for concentrated stress, which, under tension loads, would tear. The direction of major tension (stretch) and direction of grain is also important. It is recommended in forming that the major tension be transverse to the direction of grain. Lubrication aids in uniform distribution of stress and the lubricant shall be applied uniformly to work piece to avoid distortion which could result from unequal friction when material is sliding across the forming die during stretching.

2-249. Forming dics/blocks for general production are made from kirksite/zinc, alloy; for piece production from phenolic and hardwood. Some types and kinds of plastic with good hardness and high impact strengths are also used. The rubber pad hydraulic press is used to form relatively flat parts having flanges, beads, lightening holes, and for very light drawing of pan shaped parts having large radii.

2-250. Form blocks are usually manufactured from steel, phenolic (mechanical grades), kirksite/zinc cast alloy, and some types of hard molding plastic with high impact strength. The work is accomplished by setting the form block on the lower press plate or bed, and the blank is placed on the block. The blank is held in place on the block by locating pins (holes are drilled through the blank and into the form block for the insertion of the locating pins). These holes are referred to as "tooling holes," which prevent slippage of blank when pressure is applied. If tooling holes are not allowed, another method of alignment and holding of blank must be utilized. The sheet metal blank should be cut to size (allow sufficient material to form flange), deburred, and filed prior to pressing. After the block is prepared and placed on the plate, the rubber pad filled press head is lowered or closed over the block, and as the hydraulic pressure (applied by a ram to the head) increases, the rubber envelopes the form block forcing the blank to conform to the form block contour or shape. It is recommended that additional rubber be supplemented in the form of sheets (usuually l/2 - 1 inch, hardness of 70-80 durometers) over the form block and blank to prevent damaging the rubber press pad. The design of form blocks for hydropress forming requires compensation for springback. The form for forming flanges on ribs, stiffners, etc., should be undercut approximately 2-8 degrees depending on the alloy, hardness, and radius. In some cases, it will be necessary to use a combination of hand forming shrinking/stretching using supplemental machinery and pressing to complete forming by this method.

2-251. DROP HAMMER FORMING. Dies for drop hammer forming are usually made by casting metals such as kirksite. These dies can be rapidly produced; are more economical than permanent dies; can be melted and recast; and can be reinforced at selected points of wear by facing with harder material, such as tool steel for long production runs.

2-252. Normally, drop hammer forming is accomplished without benefit of hold down. The metal is slowly forced in shape by controlling the impact of blows. In many instances, it is necessary to use drawings, rings, 2 or 3 stage dies, supplemental equipment, and hard forming such as bumping hammer, wooden mallet to remove wrinkles, etc. To successfully complete forming operations, another aid that may be necessary is to anneal material between die stages and intermediately for single stage die forming.

CAUTION

Parts should be cleaned prior to annealing to protect finish. Care should be taken to remove all traces of zinc that may be picked up from kirksite forming dies, as failure to remove the zinc will result in penetration of the steel (stainless) when treated and will cause cracking.

2-253. SPINNING. Those steels that have low yield strengths in the soft/annealed condition, and low rates of work hardening are the best grades for spinning. To overcome work hardening problems, intermediate annealing and 2-3 or more stage spinning blocks are used. Annealing of the part at intervals also aids the operator when manual spinning, because less pressure is required to form metal and springback is lower.

2-254. Form blocks for spinning are usually made of phenolic, hard wood, or carbon steel. Manual spinning is usually accomplished on a lathe specifically adapted and fitted for that purpose. The main requirements are that required speed be maintained without vibration; clamping pressure is sufficient to hold part; facilities are provided to apply pressure at a uniform rate; and tools are of proper design. Normally, spinning tools are the roller or round nose type designed in such a manner that high pressure can be applied without bending. Where local design of tools are

required, raw material for manufacture is obtainable under QQ-T-570, Type D2, hardened to Rockwell C40-50.

2-255. SHEARING AND BLANKING. To prevent damage to shear, and to assure clean, accurate cuts, clearance between shear blades should be approximately one-twentieth (5%) thickness of material to be cut. Also, blades or knives must be maintained in sharp condition, clean, and free of nicks. Where only one shear is available, a clearance of 0.005 to 0.006 could be used for general shearing of sheet stock up to 0.125 inches thick. Excessive blade clearance should be avoided to prevent work hardening of cut area which increases susceptibility to stress corrosion and burring. Lubrication such as lightweight engine oil or soap should be applied at regular intervals to prevent galling and to clean blades for prolonged shear blade life.

2-256. BLANKING AND PUNCHING. Blanking and punching requires close control of die clearance, shearing action of punch/blanking die. Clearance for blanking and punching should be 5% of thickness and closely controlled for all gauges. In designing dies and punches, it is important that shear action be incorporated to equalize and reduce load. Double shear should be used when possible to minimize off balance condition and load. Punches and dies should be maintained in clean sharp condition and lubricated by swabbing or spraying material to be punched with lightweight lube oil to prevent galling and to aid in keeping punch/die clean.

2-257. **GENERAL FABRICATING CHARACTERISTICS.**

2-258. PLAIN CARBON AND ALLOY STEELS.

2-259. Plain Carbon Steel - 1006 through 1015. This group of steels is used where cold formability is the main requirement, and have good drawing qualities. This series is not used where great strength is required. The strength and hardness of these grades will vary according to carbon content and amount of cold work.

2-260. Plain Carbon Steels - SAE 1016 through lO30. This group of steels is commonly known as the carburizing or case hardening grades. The addition of manganese improves machining qualities but reduces the cold formability characteristics. This group is widely used for forged stock.

2-261. Plain Carbon Steels - 1030 through 1050. This group (medium carbon types) is used where higher mechanical properties are required. The lower carbon and manganese types are used for most cold formed parts. Alloys 1030 - 1035 are used for wire and rod for cold upsetting applications, such as bolts. The higher carbon groups, such as 1040 are often cold drawn to required physical properties for use without heat treatment.

2-262. Alloy Steels - 1055 through 1095. This alloy group is used where wear resistance resulting from high carbon content is needed, and is heat treated before use in partically every application.

2-263. 1100 Series Steel. Steels in this group are generally used where easy machining is the primary requirement. The main use of these steels is for screw stock.

2-264. 1300 Series Alloy Steel. The basic advantages of this group is high strength coupled with fair ductility and abrasion resistance. The major use is in the manufacture of forgings.

2-265. 2300 Series Nickel Alloy Steels. The addition of nickel has very little effect on machinability and greatly increases elasticity and strength. This material is normally machined in the forged, annealed, and normalized condition, and heat treated after fabrication.

NOTE

These grades not currently being produced. Listed for reference only.

2-266. 2500 Series Nickel Steel. This series almost without exception, is a carburizing grade with extremely high strength core. However, the case is not as hard as obtained with other carburizing steels. This steel is used for parts requiring a high strength core and good wear resistance.

NOTE

These grades not currently being produced.

2-267. 3100, 3200, and 3300 Series Nickel Chromium steels. This series of steels is characterized by good wear resistance and tough core and surface. The 3300 series is used primarily in the form of forgings and bars which are required to meet rigid mechanical properties. This steel is more difficult to handle in fabrication and heat treatment than lower nickel - chromium alloys.

2-268. 4000 Series Molybdenum Steels. This group of steels have good impact strength and require close control of heat treatment practices to obtain the required strength and ductility.

2-269. 4100 Series Chromium - Molybdenum Steels. This series has good working properties, response to heat treatment, and high wear resistance. This group is easily fabricated by forging

and rolling. After welding and cold forming, internal stresses produced should be relieved and loss in strength regained by normalizing.

2-270. 4130 Grade Steel. This grade is used extensively in aircraft construction in the form of sheet, bar, rod and tubing. This grade has very good cold forming characteristics. Forming and welding operations are accomplished utilizing annealed material, and heat treated or normalized after these operations are completed. 4130 sheet (MIL-S-18729 can be cold bent in the annealed condition to an angle of 180° with a radius equal to the thickness of the sheet. In the normalized condition, a radius equal to 3 times the thickness is recommended.

2-271. 4140 Series Steel. This steel is used for structural, machined and forged parts over 1/2 inch thick. It is usually obtained in the normalized condition. Forgings are always normalized or heat treated after fabrication.

2-272. 4300 Series Nickel - Chromium - Molybdenum Steels. These steels are used to meet conditions in which other alloy steels have insufficient strength. Preparation for machining or forming must be by a suitable annealing cycle.

2-273. 8000 Series Molybdemum Steels. These steels are characterized by their high impact strength and resistance to fatigue. They are easy to forge and machine, and are stable at high temperatures.

2-274. 8600, 8700, 9300, 9700, 9800, and 9900 Series Steels. These steels have approximately the same characteristics as the 4300 series steele.

2-275. CORROSION RESISTANT (STAINLESS) AND HEAT RESISTANT STEELS.

2-276. The fabrication of stainless steel requires the use of modified procedures in comparison to those used for carbon steels.

2-277. Forming Sheet Stock. The corrosion resisting series, i.e., types 301, 302, 304, 305, 316, 321, 347, 410, 430, 431, etc., generally have good forming and drawing qualities. Some types (302, 304 and 305) have forming characteristics superior to plain carbon steel because of the wide spread between tensile and yield strength, and higher elongation. However, more power is required to form these types than is required for carbon steel because of higher tensile strengths and the fact that yield strength increases rapidly during forming or bending.

2-278. The straight chromium grades such as 410, 416, 430, 442, and 446 react similar to carbon steel and are somewhat less ductile than the 300 series stainless. The tensile strength are higher than carbon steel and consequently will stand higher loads before rupture. Yield strengths are also higher which means that more power is required for bending and forming. Because of the ductility factor of this series drawing and forming should be limited to 20 -25% reduction.

2-279. The 301, 302, 304, 305 and 316 types can be drawn based on a reduction of 35 to 50%, i.e., a shape 8 inches in diameter and 4 inches in depth could be drawn in one operation, based on a 50% reduction.

2-280. The strains set up by severe reductions (above 45% with chromium-nickel types and 20% with straight chromium types) should be relieved by annealing immediately after the operation is completed, especially if using type 301. If this material is not relieved in 2 - 4 hours, it may crack.

2-281. Springback allowance should be about 2 to 3 times the amount allowed for carbon steel, and naturally will vary according to the type of material being formed. The use of sharp radii shall be avoided where parts are subjected to flexing or concentrated stresses due to possible fatigue or stress corrosion failure.

2-282. Recommended bend radii for use with stainless is shown in Table 2-35.

2-283. Draw Forming. Stainless steels should be annealed for draw forming, and hardness should not exceed Rockwell B90. The beat drawing grades are of the 18-8 series. In selecting the type for drawing, welding of the finished parts, if required, shall be considered.

2-284. Drop Hammer Forming. The most common types of corrosion resistant steel used for drop hammer forming are 301, 302, 304, 305, and stablized grades 321 and 347. 301 work hardens more rapidly and is subject to strain cracking. The condition of material for best forming should be annealed. It is possible to form some type (301 and 302) in 1/4 and 1/2 hard condition. However, the severity of the forming operation must be reduced to compensate for the prehardened material.

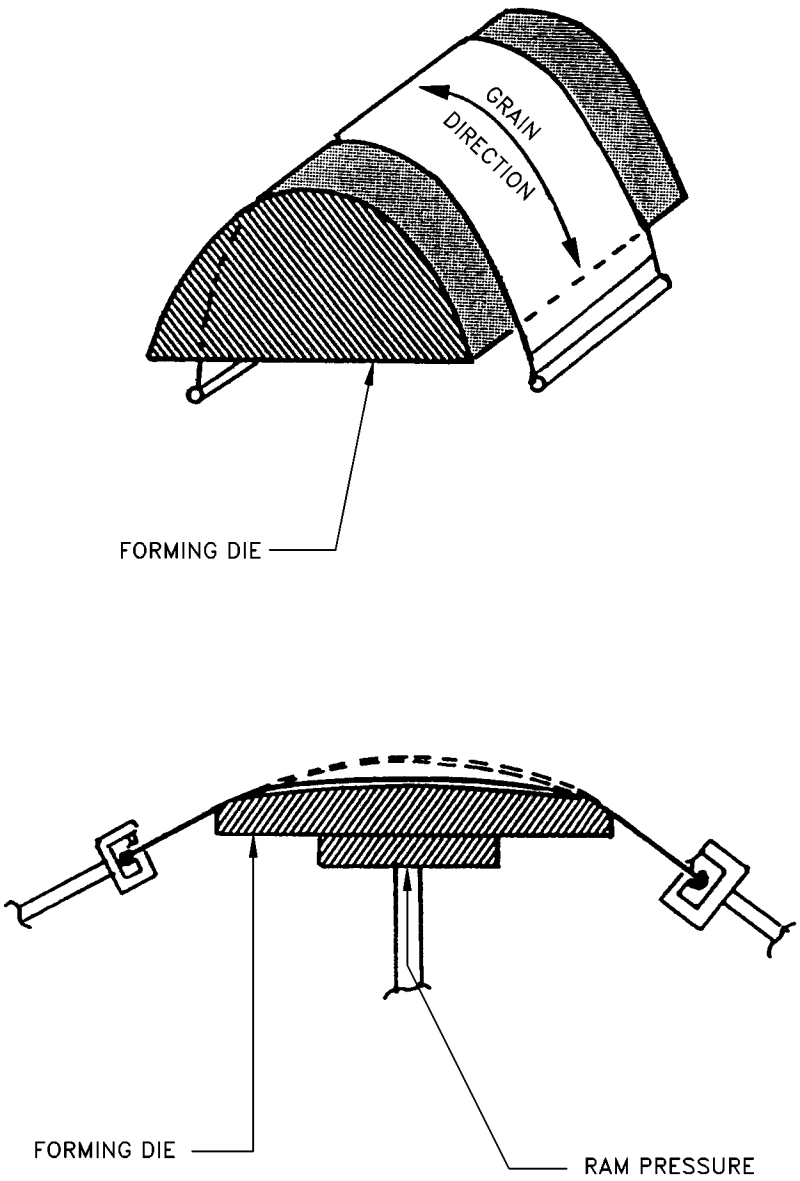

Figure 2-4. Stretch Forming

Table 2-34. Cold Bend Radii (Inside) Carbon/Low Alloy Steels

Temper, Sheet Thickness = T (Inches)									
Alloy Temper	0.016	0.020	0.025	0.032	0.040	0.050	0.063	0.125	0.187
1020/1025	2T	2T	2T	2T	2T	2T	2T	2T	2T
4130 Annealed	2T	3T	2 1/2T	2T	2 1/2T	2T	2T	2T	2T
4130 Normalized	2T	3T	2 1/2T	3T	3T	3T	3T	3T	3T
8630 Annealed	3T	3T	2 1/2T	3T	2 1/2T	2T	2T	2T	2T
8630 Normalized	3T	3T	2 1/2T	3T	3T	3T	3T	3T	3T

Table 2-35. Cold Bend Radii (Inside) Corrosion Resistant Steel Alloys

Sheet Thickness = T (Inches)				
Alloy	Temper	0.012 - 0.051	0.051 - 0.090	0.190 - 0.250
201, 202	Annealed	1-2T	1T	1 1/2T
301, 302	1/4 Hard	1-2T	1 1/2T	2T
305, 304	1/2 Hard	2T	2T	2T
309, 310	3/4 Hard	2T	3T	--
316, 321, 347	Hard	3-4T	4-5T	--
405, 410, 430	Annealed	1T	1T	1 1/2T
17-7PH	Annealed	1T	1 1/2T	2T

Table 2-36. Forging Temperature Ranges For Corrosion Resistant Steel

TYPE/GRADE	PREHEAT °F	FORGING TEMPERATURE °F		HEAT TREATED
		STARTING	FINISHING	
301	1500-1600	2050-2200	1600-1700	SEE HEAT TREAT DATA FOR ANNEALING AND STRESS RELIEF, SEE TABLE 2-3.
302	1500-1600	2050-2200	1600-1700	
303	1500-1600	2050-2200	1700-1800	
304	1500-1600	2050-2200	1600-1700	
305	1500-1600	2100-2200	1600-1700	
308	1500-1600	2100-2200	1600-1700	
316	1500-1600	2150-2250	1600-1700	
321	1500-1600	2100-2200	1600-1700	
374	1500-1600	2100-2200	1650-1750	

Table 2-36. Forging Temperature Ranges For Corrosion Resistant Steel - Continued

TYPE/GRADE	PREHEAT °F	FORGING TEMPERATURE °F		HEAT TREATED
		STARTING	FINISHING	
AIR HARDENING				
403	1400-1500	1900-2100	1600-1700	These grades shall be promptly annealed after forging because they air harden intently if allowed to cool from forging temperatures. See Heat Treat Data Table 2-3 for temperatures.
410	1400-1500	1900-2100	1600-1700	
414	1400-1500	2050-2200	1600-1700	
416	1400-1500	2100-2250	1600-1700	
420	1400-1500	2000-2100	1600-1700	
431	1400-1500	2050-2150	1600-1700	
440	1400-1500	1950-2100	1950-2100	
NON-HARDENING				
405	1400-1500	1900-2100	1750-1850	Post annealing required. See Heat Treat Data Table 2-3 for temperatures.
430	1400-1500	1900-2100	1350-1450	
442	1400-1500	1900-2000	1300-1400	
446	1400-1500	1800-2000	1300-1500	

2-285. Spinning. Spinning procedures for stainless are similar to those used for other metals. Difficulty and variations depend on individual characteristics of grade to be worked, i.e., yield strength, ultimate strength, ductility, hardness and reaction to cold working. The best grades for spinning are those that have low yield strength in soft/annealed condition and low rate of work hardening such as 304, 305, 403, 410 and 416. The straight chromium grades respond to spinning similar to carbon steel, however, more power is required. Mild warming above 200°F improves performance of the straight chromium grades.

2-286. Shearing and Blanking. Shearing and blanking of corrosion resisting steels as with other fabrication processes requires more power in comparison to shearing carbon steel and most other metals. Shears and other equipment rated for carbon steel should not be used above 50 - 70% of rated capacity when cutting stainless.

2-287. Hot Forming. Hot forming is used to form shapes in stainless that cannot be accomplished by cold forming and for forging parts economically. In using heat for forming, it is important that temperature be closely controlled. Also, finished parts should be relieved of residual stress and carbide precipitation which affects corrosion resistance. In either case, this is accomplished by fully annealing.

CAUTION

Difference in temper of raw material will result in variation of preheating, especially with the air hardening grades. The air hardening grades in tempers other than annealed may crack from thermal shock upon loading into a hot furnace.

2-288. Hot forming by methods other than forging is accomplished at somewhat lower temperatures. The unstabilized chromium-nickel grades may be formed at temperatures up to 800°F and the extra low carbon grades up to 1000°F. The use of temperatures higher than those cited above should be avoided to prevent subjection of material to the carbide precipitation heat zone.

2-289. The straight chromium (type 400 series) are more responsive to hot forming than the chromium-nickel grades. The reaction of these metals to hot forming in similar to carbon steels. Upon heating to 800°-900°F, their tensile strength is

lowered considerably and at the same time ductility begins to increase.

2-290. Forming of the air hardening grades type 403, 410 is accomplished in two temperature ranges as follows:

a. Low temperature forming up to 1400°F. The advantage of forming at this temperature is that parts can be stress relieved at 1350° - 1450°F to restore strength uniformity, and scaling is held at a minimum.

b. High temperature forming at 1525° - 1575° F. Forming at this temperature is somewhat easier because strength is low and ductility is higher. Upon completion of forming at this temperature, parts shall be fully annealed under controlled conditions by heating to 1550°F and holding, slowly cooling to 1100°F (at approximately 50°F per hour) and then cooling in air.

Grades 403, and 410 are not subject to loss of corrosion resistance due to the forming of intergranular carbides at grain boundaries.

2-291. When it is required that the non-hardening grades 430, 442, and 446 be hot formed, the recommended temperature for forming is 1400° - 1500°F. This temperature is recommended in view of the following:

a. Heating these grades above 1600°F promotes grain growth which can only be corrected by cold working.

b. For types 442 and 446, the 1400°-1500°F temperature is below the scaling limit and very close to being below the scaling limit for type 430.

2-292. **STEEL SURFACE FINISHES.**

2-293. Metal plating is a process where an item is coated with one or more thin layers of some other metal. This is the type of finishes generally used on ferrous parts, other than organic finishes. It is usually specified when there is a need for surface characteristics that the basic metal does not possess. The most commonly used types of plating are: Cadmium plate; zinc plate; nickel plate; chromium plate; copper plate; tin plate; and phosphate coatings. The thickness of the plated coating is important since its protective value is primarily dependent on its thickness. The type of plated coatings is generally dependent on the characteristics desired. For protection against corrosion when appearance is unimportant, either cadmium or zinc coatings is usually used. For appearance, nickel, chromium, and silver plating are the most commonly used. For hardness, wear resistance, and buildup of worn parts, nickel and chromium plating are used. Effectiveness of most other metallic coatings depends on their ability to provide envelope or anodic protection. Porous coatings of the more noble metals such as silver, copper, platinum and gold, tend to accelerate the corrosion of steel. For processing instructions, refer to T.O. 42C2-1-7. The following galvanic series table and dissimiliar metal definition in accordance with MS33586 are for use as a guide in the selection of the most suitable plating for parts subject to uses where galvanic corrosion would be a prime factor.

2-294. DEFINITION OF DISSIMILIAR METALS. Dissimiliar metals and alloys, for the purpose of aircraft and aircraft parts construction are separated into four groups in accordance with MS33586. Metals classified in the same group are considered similar to one another and materials classified in different groups are considered dissimilar to one another. The metal/material referred to in the groups is the metal on the surface of the part; e.g., zinc includes all zinc parts such as castings as well as zinc coated parts, whether the zinc is electro deposited, applied by hot dipping, or by metal spraying over similar or dissimiliar metal parts. The four groups are as follows:

a. GROUP I - Magnesium and its alloys. Aluminum alloys 5052, 5056, 5356, 6061 and 6063.

b. GROUP II - Cadmium, zinc, and aluminum and their alloys (Including the aluminum alloys in Group I).

c. GROUP III - Iron, lead, and tin and their alloys (except stainless steels).

d. GROUP IV - Copper, chromium, nickel, silver, gold, platinum, titaniam, cobalt, rhodium and rhodium alloys; stainless steels; and graphite.

NOTE

The above groups do not apply to standard attaching parts such as rivets, bolts, nuts and washers which are component parts of assemblies, which will be painted prior to being placed in service unless other wise specified by specifications MIL-F-7179, or other approved data.

2-295. TYPES OF PLATING.

2-296. CADMIUM PLATING (QQ-P-416). The primary purpose of cadmium plating is to retard or prevent surface corrosion of parts. Unless otherwise specified, the plating shall be applied after all machining, brazing, welding, forming and perforating of the item has been completed. Proper safety precautions should be observed in the event any welding or soldering operations are required

on cadmium plated parts because of danger from toxic vapors during such operations. Cadmium coatings should not be used on parts subjected to temperatures of 450°F or higher. All steel parts having a hardness of Rockwell C40 (180,000 PSI) and higher shall be baked at 375°± 25°F for 3 hours minimum after plating for hydrogen embrittlement relief. All steel parts having an ultimate tensile strength of 220,000 PSI or above shall not be plated, unless otherwise specified. When permission is granted, a low embrittlement cadmium plating bath shall be used. Federal Specifications QQ-P-416 should be used for cadmium plate requirements. Critical parts should be magnafluxed after plating.

2-297. Zinc Plating (QQ-Z-325). The primary purpose of zinc coatings is to retard or prevent the formation of corrosion products on exposed surfaces. Unless otherwise specified, the plating shall be applied after all machining, brazing, welding, forming and perforating have been completed. All parts having a hardness greater than Rockwell C40 and higher shall be baked at 375° ± 25°F for 3 hours after plating for hydrogen embrittlement relief. Zinc shall be deposited directly on the basic metal without a preliminary plating of other metal, except in the case of parts made from corrosion resisting steels on which a preliminary plating of nickel is permissible. Zinc plating (Type 1) should not be used in the following applications:

a. Parts which in service are subjected to a temperature of 700°F or higher.

b. Parts in contact with structural fabric structure.

c. Parts in functional contact where gouging or binding may be a factor or where corrosion might interfere with normal functions.

d. Grounding contacts where the increased electrical resistance of zinc plated surfaces would be objectional.

e. Surfaces where free circulation of air does not exist and condensation of moisture is likely to occur. For additional information, refer to QQ-Z-325.

CAUTION

Chromium and nickel electro deposits severely reduce the fatigue strength of high strength steels. All steel parts having a tensile strength of 180,000 PSI or above should be shot-peened prior to electro plating. In addition high strength steels are susceptible to detrimental hydrogen embrittlement when electro plated. All steel having an ultimate strength of 220,000 PSI or above shall not be electro plated without specific approval of the procuring service or responsible engineering activity.

2-298. Nickel Plating (QQ-N-290). This coating is divided into two classes. Class I, plating is intended for decorative plating, and Class lI, plating is intended for wear and abrasion resistance. Unless otherwise specified, the plating shall be applied after all base metal heat treatments and mechanical operations such as machining, brazing, welding, forming and perforating on the article have been completed, all steel parts shall be given a stress relief at 375° ±25F(191° ± 14C) for 3 hours or more prior to cleaning and plating, as required, to relieve residual tensile caused by machining, grinding or cold forming. Steel parts having a hardness of Rockwell C40 and higher shall be baked at 375° ± 25F for 3 hours or more and within eight (8) hours after plating to provide embrittlement relief. Parts shall not be reworked flexed or subjected to any form of stress loads after placing and prior to the hydrogen embrittlement relief treatment. The general requirements for nickel plating are specified in QQ-N-290. Nickel shall be used for the following application only in accordance with MIL-S-5002:

a. Where temperatures do not exceed 1,000°F and other coating would not be adequate or suitable.

b. To minimize the effect of dissimilar metal contacts, such as mild steel with unplated corrosion resisting steel.

c. As an undercoat for other functional coatings.

d. To restore dimensions.

2-299. Chromium Plating (QQ-C-320). This coating is of two classes; Class I, intended for use as a decorative coating; and Class II, for wear resistance and corrosion protection. Heavy chromium electro deposits (0-1-10 MILS) are often used to salvage under machine parts. Unless otherwise specified, the plating shall be applied after all basic metal heat treatments and mechanical operations such as machining, brazing, welding, forming and perforating have been completed. Hydrogen embrittlement relief shall be in accordance with blue prints and /or applicable speciefications. All plated parts which are designed for unlimited life under dynamic loads shall be shot peened in accordance with military Specification MIL-S-

13165 prior to plating. All parts with a hardness of Rockwell C40 (180,000 PSI), after shot peening and plating, shall be baked at 375° ±25°F for 3 hours for hydrogen embrittlement relief. It is extensively used as an undercoating for nickel and chromium plating.

2-300. Tin Plating (QQ-T-425). Tin plating is used where a neat appearance, protective coating and easy solderability are of prime importance. The base metal for tinplate shall be low carbon cold steel.

2-301. Phosphate Coating (MIL-P-16232). The description of phosphate coatings herein is specified as "heavy"coatings. Light phosphate coatings used as a paint base are covered by specification TT-C-490. Type "M" (Manganese) coatings are resistant to alkaline environments and should not be exposed to temperatures in excess of 250°F. Except for special purpose applications, phosphate coatings should be used with a suitable supplementary treatment. Type "Z" (Zinc) coatings should not be used in contact with alkaline materials or temperature in excess of 200°F. For the different classes of coatings and required supplemental treatments, refer to MIL-P-16232. This coating should be applied after all machining, forming, welding and heat treatment have been completed. Parts having a hardness of Rockwell C40 or higher shall be given a suitable heat treat stress relief prior to plating and shall be baked subsequent to coating as follows:

a. Type "M" shall be baked at 210° - 225°F for 1 hour.

b. Type "Z" shall be baked at 200° - 210°F for 15 minutes (embrittlement relief).

2-302. Silver Plating (QQ-S-635). Silver plating (electro deposits) has high chemical and oxidation resistance, high electrical conductivity and good bearing properties. Silver is often used as an anti-sieze and for preventing fretting corrosion at elevated temperatures. Silver plating shall be of the following types and grades:

a. Type I, Matte. Deposits without luster, normally obtained from silver-cyanide plating solutions operated without the use of brighteners.

b. Type II, Semi-Bright. Semi-lustrous deposits normally obtained from silver-cyanide plating solutions operated with brightener.

c. Type m, Bright. Sometimes obtained by polishing or by use of "brighteners".

d. Grade A. With supplementary tarnish resistant treatment (chromate treated).

e. Grade B. Without supplementary tarnishresistant treatment.

2-303. Intended Use. The following applications of thicknesses are for information purposes only:

a. 0.0005 - for corrosion protection of nonferrous base metal.

b. 0.0003 - for articles such as terminals which are to be soldered.

c. 0.0005 to 0.010 - for electrical contacts, depending on pressure, friction and electrical load.

d. 0.0005 - for increasing the electrical conductivity of base metals.

e. On ferrous surfaces, the total plated thickness shall not be less than 0.001inch. After all base-metal heat treatments and mechanical operations such as machining, brazing, welding, forming and perforating of the article have been completed,if the type is not specified, any type is acceptable. All steel parts subject to constant flexure or impact having a Rockwell hardness of RC40 or greater shall be heated at 375° ±25°F for 3 hours for stress relief prior to cleaning and plating.

2-304. Hardened parts which have been heat treated at less than 375°F shall not be heated as noted above, but shall be treated by any method approved by the contracting agency.

2-305. For complete information pertaining to silver plating, refer to Federal Specification QQ-S-365.

2-306. SURFACE TREATMENTS FOR CORROSION AND HEAT-RESISTING STEELS AND ALLOYS. Normally the corrosion-resisting and heat resisting alloys are unplated unless a coating is necessary to minimize the effect of dissimiliar metal contacts. When a plating is required it shall be in accordance with specification MIL-S-5002A or other approved technical engineering data. Where a plating is required, steel parts plated with hard coating, such as nickel and chromium or combinations thereof, shall be processed as follows in accordance with MIL-S-5002A:

a. Plated parts below Rockwell C40 hardness and subject to static loads or designed for limited life under dynamic loads, or combinations thereof, need not be shot peened prior to plating or baked after plating.

b. Plated parts below Rockwell C40 hardness which are designed for unlimited life under dynamic loads shall be shot peened in accordance with specification MIL-S-13165 prior to plating. Unless otherwise specified, the shot peening shall

be accomplished on all surfaces for which the coating is required and on all immediately adjacent surfaces when they contain notches, fillets or other abrupt changes of section size where stresses will be concentrated.

c. Plated parts which have a hardness of Rockwell C40, or above, and are subject to static loads or designed for limited life under dynamic loads or combination thereof, shall be baked at 375° ±25°F for not less than three (3) hours after plating.

d. Plated parts which have a hardness of Rockwell C40, or above, and are designed for unlimited life under dynamic loads, shall be shot peened in accordance with specification MIL-S-13165 prior to plating. Unless otherwise specified, the shot peening shall be accomplished on all surfaces for which the coating is required and all immediately adjacent surfaces when they contain notches, fillets, or other abrupt changes of section size where stresses will be concentrated. After plating, the parts shall be baked at 375°± 25°F for not less than three (3) hours.

2-307. PASSIVATION OF STAINLESS STEELS. The stainless steels are usually passivated after fabricating into parts to remove surface contaminates, which may cause discoloration or corrosive attack after the parts are placed in use. The process is primarily a cleaning operation which removes the contamination and speeds up the formation of the protective (invisible) oxide film which would occur naturally but slower in the presence of oxygen in a normal atmosphere. The protective film formation is inherent with the stainless steels in normal air when they are clean.

2-308. The foreign materials are removed from stainless to provide for uniform surface contact with oxidizing agents (Air or Acid) which forms the protective film or passive surface. In this case after the film has formed the material is placed in a condition approaching that of maximum corrosion resistance. Any areas to which oxygen contact is prevented by contaminants or other means tends to remain activated and subject to corrosion attack.

2-309. Prior to accomplishing the passivation treatments the parts shall be cleaned, all grease, oil, wax, which might contaminate the passivation solution and be a detriment to the passivation treatment shall be removed. Surfaces will be considered sufficiently clean when a wetted surface is free of water breaks. After cleaning the parts will be passivated by immersing in a solution of 20-25% (Volume) nitric acid (Sp.gr 1.42) plus 1.5 - 2.5% (Weight) sodium dichromate with process times and temperatures as follows:

CAUTION

Excessive time shall not be used, as damage to parts may occur. In addition the times and temperatures shall be selected according to the alloy involved.

TYPES OF PROCESS	TEMPERATURE	TIME (Minutes Minimum)
I	70-90	30
II	120-130	20
III	145-155	10

For parts made of ferritic or austenitic stainless use process Type I, II or III. For parts made of martensitic stainless steel, use process Type II or III. Within 15 minutes after above treatment, thoroughly rinse in hot water (140°F - 160°F). Within 1 hour after hot water rinse, immerse in an agueous solution containing 4 - 6% sodium dichromate (by weight) at 140 - 160°F for 30 minutes, and rinse thoroughly with water and dry.

NOTE

After the parts are passivated they shall be handled the minimum necessary consistant with packaging, assembly/installation. Parts for installations in high temperature areas shall not be handled with bare hands because finger prints will cause carburization and pitting of surface when heated.

2-310. VAPOR DEPOSITED COATING. Vapor deposited coating's are applied by exposing the base metal to a heated vaporized metallic coating such as cadmium and aluminum in a high vacuum. The metal coating forms by condensation of the vaporized coating metal on all exposed surfaces of the base metal. Vapor-deposited coatings can be obtained by processes in which a volatile compound of the coating is reduced or thermally decomposed upon the heated surface of the base metal. Vapor deposited coatings are used to provide good corrosion resistance for steel and eliminate sources of hydrogen embrittlement. Specific requirements for coating, aluminum vacuum deposited, are cited in specification MIL-C-23217A; and for coating, cadmium vacuum deposited, in specification MIL-C-8837.

2-311. MECHANICAL-SURFACE FINISH. The following paragraphs are concerned with mechanical surface finish of the geometrical irregularities of surfaces of solid materials and established classification for various degrees of roughness and

waviness. The surface roughness of a part is a measurement rating of the finely spaced irregularities, such as the surfaces produced by machining and abrading (abrasive honing, grinding, filing, sanding, etc.) The roughness height ratings are specified in microinches as the arithmetic average of the absolute deviations from the mean surface. Profilometers and other instruments used to measure surface height if calibrated in RMS (Root Mean Square) average will read approximately 11% higher on a given surface than those calibrated for arithmetic average. Also associated with roughness high is roughness width, usually specified in inches and the maximum permissible spacing of surface irregularities. As the arithmetic average of the absolute diviations from the mean surface. Waviness height rating (when required) may be specified in inches as the vertical distance from peaks to valleys of the waves, whereas waviness width is the distance in inches from peak to peak of the waves. Figure 2-5 shows the meaning of each symbol defined.

2-312. The symbol used to designate surface irregularities is the check mark as shown below.

*When waviness width value is required, the value may be placed to the right of the waviness height value.

**Roughness width cutoff value, when required, is placed immediately below the right-hand extension.

2-313. Designation of Surface Finish. Surface finish should be specified for production parts only on those surfaces which must be under functional control. For all other surfaces the finish resulting from the machining method required to obtain dimensional accuracy is generally satisfactory. The surface chosen (unless already designated) for a specific application will be determined by its required function. Table 2-38 gives the typical normal ranges of surface roughness of functional parts. The values cited are microinches, for example 63 = 63 Microinches or 0.000063 inches average deviation from mean.

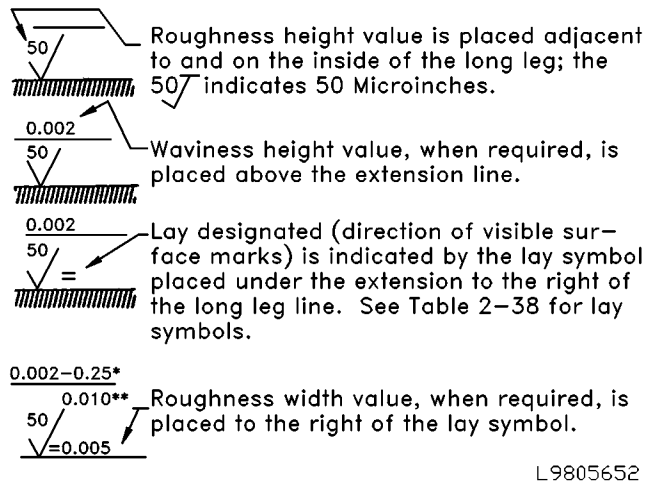

Table 2-37. Galvanic Series of Metals and Alloys

CORRODED END - ANODIC (LEAST NOBLE)	
Magnesium	Tin
Magnesium Alloys	Nickel (active)
Zinc	Inconel (active)
Aluminum - 7075 Clad	Brass
Aluminum - 6061 Clad	Copper
Aluminum - 5052	Bronze
Aluminum - 2024 Clad	Titanium
Aluminum - 3003	Monel
Aluminum - 6061 - T6	Silver Solder
Aluminum - 7075 - T6	Nickel (Passive)
Aluminum - 7178	Inconel (Passive)
Cadmium	Silver
Aluminum - 2017 - T4	Graphite
Aluminum - 2024 - T6	Gold
Aluminum - 2014 - T6	Platinum
Steel or Iron	Protected End - Cathodic
Lead	(Most Noble)

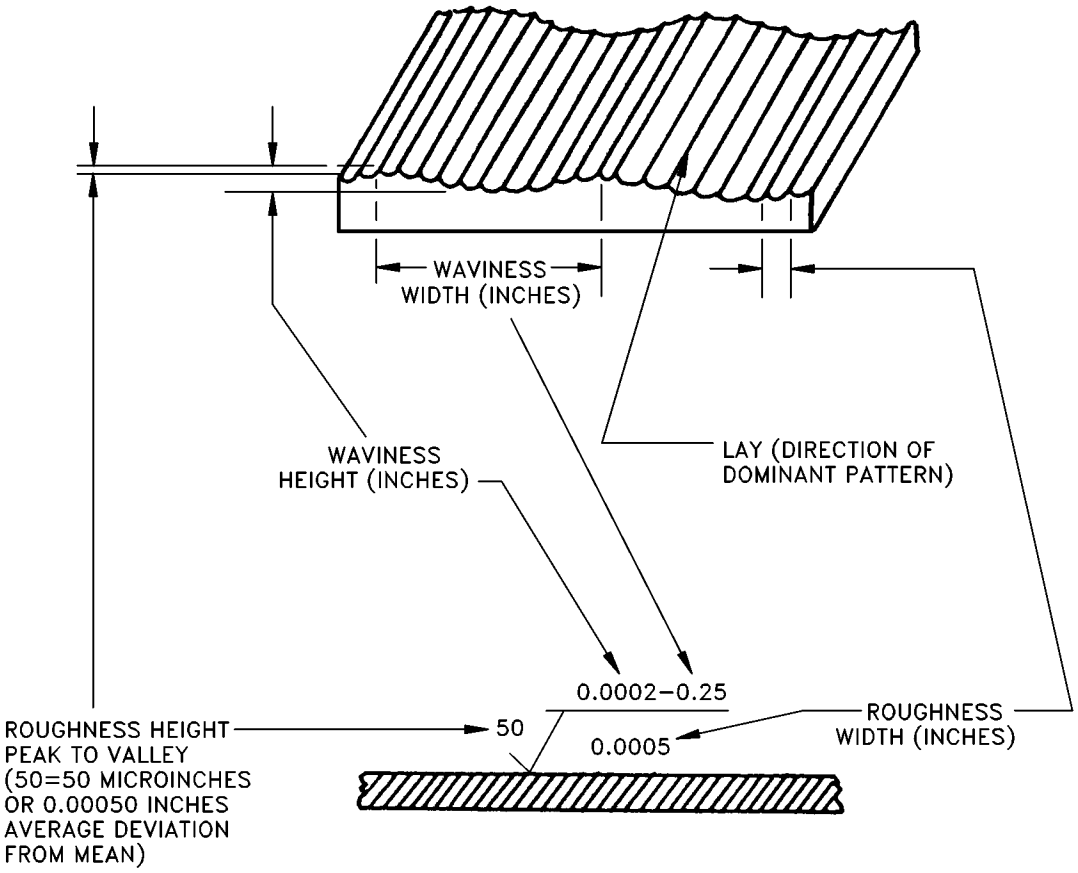

NOTE

A ROUGH SURFACE SHOULD NOT EXCEED 65 MICROINCHES (MUINCHES) 0.000065 INCHES AND A POLISHED SURFACE WOULD CORRESPOND TO 10–20 MICROINCHES

L9805650

Figure 2-5. Surface Roughness

Table 2-38. Surface Roughness and Lay Symbols

1	MICROMETER ANVILS, MIRRORS, GAGES
2	SHOP GAGE FACES COMPARATOR ANVILS
4	VERNIES, CALIPERS FACES, WRIST PINS, HYDRAULIC PISTON RODS, PRECISION TOOLS, HONED ROLLER & BALL BEARINGS (SURFACE PRODUCED BY SPECIAL HONING, LAPPING, BUFFING, ETC)
8	CRANKSHAFT JOURNALS VALVE STEMS CAM FACES HYDRAULIC CYLINDER BORES (VERY FINE SURFACE FINISH PRODUCED BY LAPPING, HONING OR BUFFING)
13	PISTON OUTSIDE DIAMETERS, CYLINDER BORES
16	SPLINE SHAFTS MOTOR SHAFT BEARINGS
32	BRAKE DRUMS BROACHED HOLES PRECISION PARTS GEAR TEETH GROUND BALL & ROLLER BEARING
63	GEAR LOCATING FACES GEAR SHAFTS & BORES CYLINDER HEAD FACES PISTON CROWNS
125	MATING SURFACES, NO MOTION
250	CLEARANCE SURFACES, ROUGH MACHINE PARTS

LAY SYMBOLS

SYMBOL		EXAMPLE
=	LAY PARRALLED TO SURFACE TO WHICH SYMBOL APPLIES	DIRECT. OF TOOL MARKS
⊥	LAY PERPENDICULAR TO SURFACE TO WHICH SYMBOL APPLIES	DIRECT. OF TOOL MARKS
X	LAY IN BOTH DIRECTIONS TO SURFACE TO WHICH SYMBOL APPLIES	DIRECT. OF TOOL MARKS
M	LAY MULTIDIRECTIONAL TO SURFACE TO WHICH SYMBOL APPLIES	
C	LAY CIRCULAR TO SURFACE TO WHICH SYMBOL APPLIES	
R	LAY RADIAL RELATIVE TO SURFACE TO WHICH SYMBOL APPLIES	

L9805653

SECTION III

ALUMINUM ALLOYS

3-1. CLASSIFICATION.

3-2. Aluminum alloys are produced and used in many shapes and forms. The common forms are casting, sheet, plate, bar, rod (round, hex, etc.), angles (extruded and rolled or drawn), channels and forgings. The inherent advantages of this material are lightweight, corrosion resistance to the atmosphere and many varieties of chemicals, thermal and electrical conductivity, reflectivity for radiant energy of all wave lengths and ease of fabrication.

3-3. The above factors plus the fact that some alloys of this material can be formed in a soft condition and heat treated to a temper comparable to structural steel make it very adaptable for fabricating various aircraft and missile parts.

3-4. COMMERCIAL AND MILITARY DESIGNATIONS. The present system utilized to identify aluminum alloys is the 4 digit designation system. The major alloy element for each type is indicated by the first digit (see Table 3-1) i.e., 1XXX indicates aluminum of 99.00% minimum, 2XXX indicates an aluminum alloy in which copper is the main alloying element, etc. Although most aluminum alloys contain several alloying elements only one group the 6XXX designate more than one alloying element. See Table 3-1 for complete listing.

Table 3-1. Designations for Alloy Groups

1XXX - - -	Aluminum 99.00% of minimum and greater
2XXX - - -	Copper
3XXX - - -	Mangenese
4XXX - - -	Silicon
5XXX - - -	Magnesium
6XXX - - -	Magnesium and Silicon
7XXX - - -	Zinc
8XXX - - -	Other element
9XXX - - -	Unused series

The second digit of the destination indicates modification in impurity limits. If the second digit is 0 it indicates that there is no special control on the impurities, while numbers 1 - 9 which are assigned consecutively as needed indicates special control of one individual impurity. Thus 1040 indicates 99.40% minimum aluminum without special control on individual impurities and 1140, 1240 etc. indicate same purity with special control on one or more impurities.

3-5. The last two of the four digits in alloy groups 2XXX through 8XXX have no special significance except that they serve to designate the alloy by its former number, i.e., 243, 525, 758, etc.

3-6. Experimental alloys are, also, designated by this system except that the 4 digit number is prefixed by an X.

Table 3-2. Aluminum Alloy Designation and Conversions to 4 Digit System

OLD	NEW	MAJOR ALLOYING ELEMENT
2S	1100	None (Aluminum 99.00X)
3S	3003	Manganese
4S	3004	Manganese
11S	2011	Copper
14S R301 Core	2014	Copper
17S	2017	Copper
A17S	2117	Copper (Special control of impurities)
18S	2018	Copper
24S	2024	Copper
19S	2219	Copper
32S	4032	Silicon
50S	5050	Magnesium
52S	5052	Magnesium
56S	5056	Magnesium
61S	6061	Magnesium & Silicon
62S	6062	Magnesium & Silicon
63S	6063	Magnesium & Silicon
MA15	7050	Zinc
--	7475	Zinc
72S	7072	Zinc
75S	7075	Zinc
78S	7178	Zinc
79S	7079	Zinc

NOTE

Cladding which is a sacrificial aluminum coating applied to an aluminum alloy core for the purpose of increasing corrosion resistance is designated as alclad 2024, alclad 2014, alclad 7075, etc.

3-7. Aluminum alloys for military use are identified by military and federal specifications which are comparable to commercial specifications and designations. The following table is a general list of the commonly used military and federal specifications according to the commercial designation and forms of material.

3-8. MECHANICAL PROPERTIES. Prior to presenting factual data on mechanical properties the tempers (hardness) and methods of designation should be explained. For nominal mechanical properties see Table 3-4.

3-9. The tempers of aluminum alloys are produced essentially by three methods. These methods are cold working (strain hardening), heat treatment and a combination of the two. The various alloys of aluminum are either classed as heat-treatable or non-heat-treatable. Alloys 1100, 3003, alclad 3003, 3004, alclad 3004, 5050 and 5052 are classed as nonheat-treatable. The tempers of these alloys are designated by symbols H1, H2, H3, H4, F & O.

3-10. A second number added to the above indicates the degree of strain hardening-actual temper.

Example: 2=1/4 hard (2/8) - H12, H22, H32
4=1/2 hard (4/8) - H14, H24, H34
6=3/4 hard (6/8) - H16, H26, H36
8=Full Hard (8/8) - H18, H28, H38

As previously pointed out the above tempers designation symbols are hyphen (-dash) suffixed to the 4 digit alloy designation. Example: 1000-H12, 5052-H24, 3004-H34 etc. The general symbols used for the nonheat-treatable alloys are as follows:

-F As fabricated
-O Annealed
-H21 Strain hardened only
-H2 Strain hardened then partial annealed
-H3 Strain hardened then stabilized

NOTE

Attempt should not be made to alter the temper characteristics of the "H" series of aluminum alloys other than in emergencies. <u>This shall be limited to annealing operation only.</u>

3-11. Alloys alclad 2014, 2024, alclad 2024, 6061, 7075, alclad 7075 and 7178 are classed as heat treatable. The mechanical properties of these alloys is improved by heat treatment or by a combination of heat treatment and strain hardening. The tempers for these alloys is designated by symbols, W, T, T2, T3, T4, T5, T6, T7, T8, T9, T10, F and O. Following is a summary of these symbols.

-F As fabricated
-O Annealed
-W Solution heat treated - unstable temper
-T Treated to produce stable tempers other than -F or -O
-T2 Annealed (cast products only)
-T3 Solution heat treated and then cold worked
-T4 Solution heat treated
-T5 Artificially aged only
-T6 Solution heat treated and then artificially aged
-T7 Solution heat treated and stabilized
-T8 Solution heat treated, cold worked and then artificially aged
-T9 Solution heat treated, artificially aged, and then cold worked
-T10 Artificially aged and then cold worked

Added numbers to the above denotes a modification of standard tempers. Example: The numeral "6" following "T3" indicates a different amount of cold work then used in "T3" such as 2024-T36. The numbers added to indicate modification or significant alternation of the standard temper are arbitrarily assigned and specification for the alloy should be utilized to determine specific data.

3-12. The following standard modification digits have been assigned for wrought products in all alloys: TX-51 - Stress-Relieved by Stretching: Applies to products which are stress-relieved by stretching the following amounts after solution heat treatment:

Plate	1 1/2 to 3% permanent set
Rod, Bar and Shapes	1 to 3% permanent set

Applies directly to plate and rolled or cold finishes rod and bar. These products receive no further straightening after stretching. Applies to extruded rod, bar and shapes which receive minor straightening after stretching to comply with standard tolerances.

-TX510 - Applies to extruded rod, bar and shapes which receive no further straightening after stretching.
-TX511 - Applies to extruded rod, bar and shapes which receive minor straightening after stretching to comply with standard tolerances.

Table 3-3. Federal and Military Specifications

ALLOY	FORM (COMMODITY)	AMS	FEDERAL	MILITARY
1100	Bars Rolled	4102	QQ-A-411, QQ-A-225/1	-
	Bar, rod, wire and shapes, rolled or drawn		QQ-A-411, QQ-A-225/1	-
	Sheet and Plate	4001B,4003B	QQ-A-561, QQ-A-250/1	-
	Tubing	4062C	WW-T-783 (Old), WW-T-700/1	-
*		-	-	MIL-A-148
	Extrusion (Impact)	-	-	MIL-A-12545
1360	Wrought Product	-	-	MIL-A-799
2011	Bar and Rod	-	QQ-A-365, QQ-A-225/3	-
2014	Bar, Rod and Shapes Extruded	4153A	QQ-A-261, QQ-A-200/2	
	Bar, Rod and Shapes Rolled or Drawn	4121B	QQ-A-266, QQ-A-225/4	
	Forgings	4134A,4135H	QQ-A-367	
	Extrusions (Impact)		(See QQ-A-367 & 367-1)	MIL-A-12545
Alclad 2014	Plate and Sheet		QQ-A-255, QQ-A-250/3	
2017	Bar, Rod, Wire and Shapes, Rolled or Drawn	4118	QQ-A-351, QQ-A-225/5	
	WIRE - ROD		QQ-A-430	MIL-W-7986
	FORGINGS		QQ-A-367	
2018	Forgings	4140	QQ-A-367	
2020	Sheet and Plate		QQ-A-250/16	MIL-A-8882
2024	Bar, Rod and Shapes	4152	QQ-A-267, QQ-A-200/3	
	Extruded			
	Bar, Rod and Shapes Rolled or Drawn	4120	QQ-A-225/6, QQ-A-268	
2024	Plate and Sheet	4035 4037	QQ-A-355, QQ-A-250/4	

Table 3-3. Federal and Military Specifications - Continued

ALLOY	FORM (COMMODITY)	AMS	FEDERAL	MILITARY
Alclad 2024	Sheet and Plate	4040 4041 4042	QQ-A-362, QQ-A-250/5	
2024	Tube Drawn	4086 4087 4088	WW-T-785 (Old), WW-T-700/3	
2025	Forgings	4130	QQ-A-367	
2218	Forgings	4142	QQ-A-367	
2219	Plate and Sheet			MIL-A-8720
	Sheet and Plate Sheet and Plate, Alclad Extrusions	4031 4090 4094 4095 4096 4162 4163	QQ-A-250/30	
3003	Bar, Rod, Shapes Extruded		QQ-A-200/1, New QQ-A-357, Old	
	Bar, Rod, Wire and Shapes Rolled or Drawn		QQ-A-225/2 (New) QQ-A-356 (Old)	
	Plate and Sheet	4006 4008	QQ-A-359, QQ-A-250/2	
	Tube Drawn	4065 4067	WW-T-786 (Old) WW-T-700/3	
4032	Forgings	4145	QQ-A-367	
5052	Bar, Rod, Wire and Shapes Drawn	4114	QQ-A-225/7 (New) QQ-A-315 (Old)	
5052	Plate and Sheet	4015 4016 4017	QQ-A-318 QQ-A-250/8	
	Tube, Drawn	4070 4071	WW-T-787 (Old), WW-T-700/4	
5056	Bar, Rod and Wire Rolled or Drawn	4182		MIL-C-915 (Ships)

Table 3-3. Federal and Military Specifications - Continued

ALLOY	FORM (COMMODITY)	AMS	FEDERAL	MILITARY
5056 (Cont)	Bar, Rod, Shapes-Extruded		QQ-A-200/7	MIL-C-6136
	Plate Sheet		QQ-A-250/9	
	Wire Rod			MIL-W-7986
	Welding Rod		QQ-R-566 C1 FS-RA156	
5083	Bar, Rod and Shapes		QQ-A-200/4 (New)	MIL-A-19005
	Plate and Sheet		QQ-A-250/8 (New)	MIL-A-87001 MIL-A-17358
5086	Plate and Sheet		QQ-A-250/7 (New)	MIL-A-19070
5154	Plate and Sheet	4018 4019		MIL-A-17357
6061	Bar, Rod and Shapes Extruded	4150	QQ-A-270	
	Bar, Rod and Shapes Rolled or Drawn		QQ-A-225/8 (New) QQ-A-325 (Old)	
6061	Forgings	4127	QQ-A-367d-1	
	Plate and Sheet	4025 4026 4027	QQ-A-327 QQ-A-250/11 (New)	
	Tube, Drawn	4080 4082	WW-T-789/WW-T-700/6	
	Tube, Hydraulic	4081		MIL-T-7081
Alclad 6061	Sheet and Plate	4021 4022 4023		
6062	Bar, Rod and Shapes Extruded	4155	QQ-A-270 (Old) QQ-A-200/8 (New)	
	Tube, Drawn	4091 4092 4093		
	Tube, Hydraulic			MIL-T-7081
6063	Bar, Rod and Shapes Extruded	4156	QQ-A-200/9 (New) QQ-A-274 (Old)	
6066	Bar, Rod and Shapes Extruded			

Table 3-3. Federal and Military Specifications - Continued

ALLOY	FORM (COMMODITY)	AMS	FEDERAL	MILITARY
6151	Forgings	4125	QQ-A-367	
7050	Plate	4050 4201		
	Extrusion	4340 4341 4342		
	Die Forging	4107		MIL-A-46118D (Armor)
	Hand Forging	4108		
7075	Bar, Rod and Shapes Extruded	4154	QQ-A-225/11 QQ-A-277	
	Bar, Rod, Shapes and Wire, Rolled or Drawn	4122	QQ-A-225/9 QQ-A-282	
	Forgings	4139	QQ-A-367	
	Extrusions (Impact)	4170		MIL-A-12545
	Plate and Sheet	4044 4045	QQ-A-283 QQ-A-250/12	
Alclad 7075	Plate and Sheet	4048 4049	QQ-A-287 QQ-A-250/13	
	Plate and Sheet Alclad one side		QQ-A-250/13	MIL-A-8902
7076	Forgings	4137	QQ-A-367	MIL-A-11352
7079	Forgings	4138	QQ-A-367	
	Plate and Sheet		QQ-A-250/17	
	Plate and Sheet Alclad one side		QQ-A-250/18	
7475	Sheet and Plate	4207 4202		
	Rod			MIL-A-63547
7178	Bar and Shapes Extruded	4158		MIL-A-9186
	Plate and Sheet	4051 4052	QQ-A-250/14	MIL-A-9180
8280	Sheet			MIL-A-11267 (ORD)

Table 3-3. Federal and Military Specifications - Continued

ALLOY	FORM (COMMODITY)	AMS	FEDERAL	MILITARY
99.75% 99.5% 99.3% 99.0%	Ingot		QQ-A-451	
43 108 A108 113 122 A132	Foundry Ingot		QQ-A-371	
142 195 B195 214 220 319 355 356	Foundry Ingot		QQ-A-371	
XB216	Foundry Ingot			MIL-A-10937 (ORD)
43	Sand Castings		QQ-A-601	
108	Sand Castings		QQ-A-601	
113	Sand Castings		QQ-A-601	
122	Sand Castings		QQ-A-601	
142	Sand Castings	4222	QQ-A-601	
195	Sand Castings	4230 4231	QQ-A-601	
B214	Sand Castings		QQ-A-601	
XB216	Sand Castings			MIL-A-10936 (ORD)
220	Sand Castings		QQ-A-601	
319	Sand Castings	4240	QQ-A-601	
355	Sand Castings	4210 4212 4214	QQ-A-601	
356	Sand Castings	4217		
A612	Sand Castings			MIL-A-10936 (ORD)
ML	Sand Castings			MIL-A-25450 USAF
43	Permanent Mold Castings		QQ-A-596	
A108	Permanent Mold Castings		QQ-A-596	

Table 3-3. Federal and Military Specifications - Continued

ALLOY	FORM (COMMODITY)	AMS	FEDERAL	MILITARY
113	Permanent Mold Castings		QQ-A-596	
122	Permanent Mold Castings		QQ-A-596	
A132	Permanent Mold Castings		QQ-A-596	
B195	Permanent Mold Castings	4282 4283	QQ-A-596	
XB216	Permanent Mold Castings			MIL-A-10935 (ORD)
319	Permanent Mold Castings		QQ-A-596	
355	Permanent Mold Castings	4280 4281	QQ-A-596	
356	Permanent Mold Castings	4284 4286	QQ-A-596	
750	Permanent Mold Castings	4275	QQ-A-596	
ML	Permanent Mold Castings			
13	Die Castings	4290	QQ-A-591	MIL-A-15153 Ships
43	Die Castings		QQ-A-591	MIL-A-15153 Ships
218	Die Castings		QQ-A-591	MIL-A-15153 Ships
360	Die Castings	4290	QQ-A-591	
A360	Die Castings		QQ-A-591	MIL-A-15153 Ships
380	Die Castings		QQ-A-591	
A380	Die Castings	4291	QQ-A-591	MIL-A-15153 Ships
	Misc STANDARD/SPECIFICATIONS			

-TX52 - Stress-Relieved by Compressing: Applies to products which are stress-relieved by compressing after solution heat treatment.

-TX53 - Stress-Relieved by Thermal Treatment.

3-13. The following two digit - T temper designations have been assigned for wrought products in all alloys:

-T42 - Applies to products solution heat treated by the user which attain mechanical properties different from those of the -T4 temper.*

-T62 - Applies to products solution heat-treated and artificially aged by the user which attain mechanical properties different from those of the -T6 temper.*

*Exceptions not conforming to these definitions are 4032-T62, 6101-T62, 6062-T62, 6063-T42 and 6463-T42.

3-14. For additional information on heat treating aluminum alloys, see paragraph 3-22.

3-15. Chemical composition nominal plus general use data are given in Table 3-4 and nominal mechanical properties at room temperature are given in Table 3-5. The values cited are general and intended for use as comparisons values. For specific values the specification for the alloy should be utilized.

Table 3-4. Chemical Composition Nominal and General Use Data 1/

	1 NOMINAL COMPOSITION - %												
ALLOY	SI	CU	MN	MG	CR	ZN	AL	FLAT AND COILED SHEET	PLATE	SHAPES RODS AND BARS	TUBE	PIPE	CHARACTERISTICS
EC	--	--	--	--	--	--	99.45		X				Electrical conductor
1060	0.25	0.05	0.03	0.03	--	0.05	99.60		X				Good corrosion resistance, electrical conductivity, formability and weldability.
1100	1.0	0.20	0.05	--	0.10	0.10	99.0	X	X	X	X		Excellent formability, readily welded and brazed, corrosion resistant.
1145	0.55	0.05	0.05	--	--	--	99.45	X					Excellent formability combined with high electrical and thermal conductivity and corrosion resistant.
2014	0.8	4.5	0.8	0.4	0.10	0.25	REM		X	X	X		High strength alloy. Electric resistance weldability excellent fusion weldability limited.
2024	0.5	4.5	0.6	1.5	0.10	0.25	REM		X	X	X		Popular sheet alloy for aircraft similar to 2014.

Table 3-4. Chemical Composition Nominal and General Use Data 1/ - Continued

	1 NOMINAL COMPOSITION - %												
ALLOY	SI	CU	MN	MG	CR	ZN	AL	FLAT AND COILED SHEET	PLATE	SHAPES RODS AND BARS	TUBE	PIPE	CHARACTERISTICS
2219	0.1	6.2	0.3	0.01	-	0.05	REM	X	X	X	X		Strutural uses requiring high strength up to 600 degrees F; high strength weldments.
3003	0.6	0.20	1.2	--	--	0.10	REM	X	X	X	X		Stronger than 1100 with good weldability and formability, high resistance to corrosion.
3004	0.30	0.25	1.2	1.0	--	0.25	REM	X	X				Stronger than 1100 and 3003 with fair workability and good corrosion resistance.
5005	0.40	0.20	0.20	0.8	0.10	0.25	REM	X	X				Similar to 3003 in strength. Good anodizing characteristics, formability and resistance to corrosion.
5050	0.40	0.20	0.10	1.4	0.10	0.25	REM	X	X				Good anodizing strength, formability, weldability, and corrosion resistance.

Table 3-4. Chemical Composition Nominal and General Use Data 1/ - Continued

	1 NOMINAL COMPOSITION - %												
ALLOY	SI	CU	MN	MG	CR	ZN	AL	FLAT AND COILED SHEET	PLATE	SHAPES RODS AND BARS	TUBE	PIPE	CHARACTERISTICS
5052	0.45	0.10	0.10	2.5	0.25	0.10	REM	X	X				Highest strength of non-heat-treatable alloys. Good corrosion resistance and finishing characteristics.
5083	0.40	0.10	0.8	4.5	0.15	0.25	REM		X	X			High weld joint efficiency with basic good strength and resistance combined with good formability.
5154	0.45	0.10	0.10	3.5	0.25	0.20	REM		X	X			Good strength and excellent weldability.
5254	0.45	0.05	0.01	3.5	0.25	0.20	REM		X				Good strength, weldability and corrosion resistance.
5357	0.12	0.07	0.3	1.0	--	--	REM	X					Excellent bright finishing characteristics.
5454	0.40	0.10	0.8	2.7	0.2	0.25	REM		X	X	X		Excellent strength at elevated temperature (150 -300 F) plus weldability.
5456	0.40	0.20	0.8	5.3	--	--	REM		X	X			High strength and corrosion resistance, weldable.

Table 3-4. Chemical Composition Nominal and General Use Data 1/ - Continued

	1 NOMINAL COMPOSITION - %												
ALLOY	SI	CU	MN	MG	CR	ZN	AL	FLAT AND COILED SHEET	PLATE	SHAPES RODS AND BARS	TUBE	PIPE	CHARACTERISTICS
5457	0.08	0.20	0.3	1.0	--	--	REM	X					Superior bright finish when anodized.
5557			0.25	0.6			REM	X					Good bright finishing characteristics. Good weldability and formability.
5652				2.5	0.25		REM		X				Excellent strength with good finishing characteristics and corrosion resistance.
6061	0.6	.25	0.15	1.0	.25	0.25	REM		X	X	X	X	Best weldability of heat treatable alloys, good formability and corrosion resistance.
6062	0.6	.25	0.15	1.0	.06	0.25	REM			X	X		Good weldability with formability better than 6061.
6063	0.4	0.10	0.10	0.7	0.10	0.25	REM			X	X	X	Good finishing characteristics and resistance to corrosion. Good workability with moderate strength.

Table 3-4. Chemical Composition Nominal and General Use Data 1/ - Continued

	1 NOMINAL COMPOSITION - %												
ALLOY	SI	CU	MN	MG	CR	ZN	AL	FLAT AND COILED SHEET	PLATE	SHAPES RODS AND BARS	TUBE	PIPE	CHARACTERISTICS
7050	-	2.3	-	2.25	-	6.2	REM	X	X	X	X		High tensile properties, good exfoliation corrosion resistance good stress-corrosion cracking resistance.
7075	0.50	1.6	0.30	2.5	.3	5.6	REM		X	X	X		2/ Extra high strength and hardness. Electric resistance weldability but limited fusion weldability.
7079	0.30	.6	.2	3.3	.2	4.3	REM			X			Similar to 7075 but maximum strength in thick sections.
7178		2.0	0.30	2.7	.3	6.8	REM		X	X			High strength alloy for a/c applications, however it is notch sensitive.
7475	0.05	1.5	0.03	2.25	2.1	5.7	REM	X	X				Aerospace applications requiring high strength, toughness up to 300 degrees F resistance to stress-corrosion cracking.

SI = Silicon MN = Manganese CR = Chromium AL = Aluminum CU = Copper MG = Magnesium ZN = Zinc

1/ Nominal Composition Does Not Include All Alloying Elements That May Pertain, Specification Should Be Utilized When Specific Data Required.

2/ 7075 - T73 Is Completely Resistant To Stress Corrosion Cracking.

Table 3-5. Mechanical Properties - Typical

Alloy and Temper	Tensile Strength PSI	Yield Strength (Offset= 0.2%) PSI	Elongation, Per Cent in 2 in. Sheet Specimen (1/16 in. Thick)	Brinell Hardness 500-kg Load 10 MMM Ball	Shearing Strength PSI
1100-0	13,000	5,000	35	23	9,000
1100-H12	16,000	15,000	12	28	10,000
1100-H14	18,000	17,000	9	32	11,000
1100-H16	21,000	20,000	6	38	12,000
1100-H18	24,000	22,000	5	44	13,000
3003-0	16,000	6,000	30	28	11,000
3003-H12	19,000	18,000	10	35	12,000
3003-H14	22,000	21,000	8	40	14,000
3003-H16	26,000	25,000	5	47	15,000
3003-H18	29,000	27,000	4	55	16,000
Alclad 3003					
3004-0	26,000	10,000	20	45	16,000
3004-H32	31,000	25,000	10	52	17,000
3004-H34	35,000	29,000	9	63	18,000
3004-H36	38,000	33,000	5	70	20,000
3004-H38	41,000	36,000	5	77	21,000
Alclad 3004					
Alclad 2014-0	25,000	10,000	21	--	18,000
Alclad 2014-T3	63,000	40,000	20	--	37,000
Alclad 2014-T4	61,000	37,000	22	--	37,000
Alclad 2014-T6	68,000	60,000	10	--	41,000
2024-0	27,000	11,000	20	47	18,000
2024-T3	70,000	50,000	18	120	41,000
2024-T36	72,000	57,000	13	130	42,000
2024-T4	68,000	47,000	20	120	41,000
Alclad 2024-0	26,000	11,000	20	--	18,000
Alclad 2024-T3	65,000	45,000	18	--	40,000
Alclad 2024-T36	67,000	53,000	11	--	41,000
Alclad 2024-T4	64,000	42,000	19	--	40,000
Alclad 2024-T81	65,000	60,000	6	--	40,000
Alclad 2024-T86	70,000	66,000	6	--	42,000
2219-0	25,000	11,000	18	--	--
2219-T42	52,000	27,000	20	--	--
2219-T31,T351	52,000	36,000	17	96	33,000
2219-T37	57,000	46,000	11	110	37,000
2219-T62	60,000	42,000	10	113	37,000
2219-T81,T851	66,000	51,000	1	123	41,000
2219-T87	69,000	57,000	10	128	40,000
5005-0	18,000	6,000	30	28	11,000
5005-H32	20,000	17,000	11	36	14,000
5005-H34	23,000	20,000	8	41	14,000
5005-H36	26,000	24,000	6	46	15,000
5005-H38	29,000	27,000	5	51	16,000

Table 3-5. Mechanical Properties - Typical - Continued

Alloy and Temper	Tensile Strength PSI	Yield Strength (Offset= 0.2%) PSI	Elongation, Per Cent in 2 in. Sheet Specimen (1/16 in. Thick)	Brinell Hardness 500-kg Load 10 MMM Ball	Shearing Strength PSI
5050-0	21,000	8,000	24	36	15,000
5050-H32	25,000	21,000	9	46	17,000
5050-H34	28,000	24,000	8	53	18,000
5050-H36	30,000	26,000	7	58	19,000
5050-H38	32,000	29,000	6	63	20,000
5052-0	28,000	13,000	25	47	18,000
5052-H32	33,000	28,000	12	60	20,000
5052-H34	38,000	31,000	10	68	21,000
5052-H36	40,000	35,000	8	73	23,000
5052-H38	42,000	37,000	7	77	24,000
5154-0	35,000	17,000	27	58	22,000
5154-H112	35,000	17,000	25	63	---
5154-H32	39,000	30,000	15	67	22,000
5154-H34	42,000	33,000	13	78	24,000
5154-H36	45,000	36,000	12	83	26,000
5154-H38	48,000	39,000	10	87	28,000
5357-0	19,000	7,000	25	32	12,000
5357-H32	22,000	19,000	9	40	13,000
5357-H34	25,000	22,000	8	45	15,000
5357-H36	28,000	26,000	7	51	17,000
5357-H38	32,000	30,000	6	55	18,000
6061-0	18,000	8,000	25	30	12,000
6061-T4	35,000	21,000	22	65	24,000
6061-T6	45,000	35,000	12	95	30,000
7050-T74, T7451,T7452	74,000	65,000	13	142	---
7075-0	33,000	15,000	17	60	22,000
7075-T6	83,000	73,000	11	150	48,000
Alclad 7075-0	32,000	14,000	17	--	22,000
Alclad 7075-T6	76,000	67,000	11	--	46,000
A1clad 7079-T6	70,000	60,000			
7178-0	40,000	21,000	10		
7178-T6	83,000	72,000	6		
7079-T6	72,000	62,000			
7475-T7351	73,000	63,000	14	--	--

Table 3-6. Physical Properties-Standard Alloys

ALLOY	SPECIFIC GRAVITY	WEIGHTS PER CU.IN.	APPROX MELTING RANGE DEGREES F	ELECTRICAL CONDUCTIVITY % COMPARE TO COPPER STANDARD
1100-0	2.71	0.098	1,190-1,215	59
1100-H18				57
3003-0				50
3003-H12	2.73	0.099	1,190-1,210	42
3003-H14				41
3003-H18				40
3004-0	2.72	0.098	1,165-1,205	42
3004-H38				42 50
2014-0	2.80	0.101	950-1,180	40 30
2024-0	2.77	0.100	935-1,810	50
2024-T3				30
2219	2.84	0.102	1010-1190	44
5050-0	2.69	0.097	1,160-1,205	50
5050-H38				50
5052-0	2.68	0.097	1,100-1,200	35
5052-H38				35
5357-0	2.70	0.098	1,165-1,210	43
5357-H38				43
6061-0	2.70	0.098	1,080-1,200	45
6061-T4,T6				40
7050	2.83	0.102	890-1175	45
7075-0	2.80	0.101	890-1,180	--
7075-T6				30
7475	2.80	0.101	890-1175	46
BRASS	8.4-8.8	0.304-0.319	--	26-43
Copper	8.94	0.322	1981	100
Monel	8.8	0.318	---	4
Nickel	8.84	0.319	2645	16
Steel(low alloy)	7.6-7.8	0.276-0.282	2800	3-15
Steel(18.8 stainless)	7.92	0.283	2500-2650	2-4
Tin	7.3	0.265	449	15
Zinc	7.1	0.258	787	30

Table 3-7. Heat Treating (Soaking) Temperatures

ALLOY DESIGNATION	SOLUTION HEAT TREAT TEMPERATURE (DEGREES F)	TEMPER
WROUGHT ALLOYS Except forgings alloys		
2014	925-945	2014-T4
2017	925-945	2017-T4
2117	925-950	2117-T4
2024	910-930	2024-W
2219	985-1005	2219-T4
6061	960-1010	6061-T4
6062	960-1010	6062-T4
6066	960-980	6066-T4
7050	880-900	7050-W
7075 (rolled or drawn)	860-930	7075-W
7075 (Extruded)	860-880	7075-W
7075 (Sheet .051 in thickness or less)	910-930	7075-W
7178 (rolled or drawn)	860-930	7178-W
7178 (Extruded)	860-880	7178-W
*7079	820-840	7079-W
*7079 Other temperature may be required for certain sections and conditions.		
7475	880-970	7475-W
FORGINGS ALLOYS		
2014	925-950	2014-T4
2017	925-950	2017-T4
2018	940-970	2018-T4
FORGINGS		
2025	950-970	2025-T4
4032	940-970	4032-T4
6151	950-980	6151-T4
6061	960-1010	6061-T4
7075	360-890	7075-W
7075 Other temperatures may be required for certain sections and conditions.		
7079	820-840	7079-W
7079 Other temperatures may be required for certain sections and conditions.		
SAND CAST ALLOYS		
122	930-960	T4
142	950-980	T4
195	940-970	T4
220	800-820	T4
319	920-950	T4
355	960-990	T4
356	980-1010	T4

Table 3-7. Heat Treating (Soaking) Temperatures - Continued

ALLOY DESIGNATION	SOLUTION HEAT TREAT TEMPERATURE (DEGREES F)	TEMPER
40E Solution heat treatment not required.		
PERMANENT MOLD CAST ALLOYS		
122	930-960	T4
A132	940-970	T4
142	950-980	T4
B195	935-965	T4
355	960-990	T4
356	980-1010	T4

3-16. PHYSICAL PROPERTIES. Commercially pure aluminum weights 0.098 pounds per cubic inch, corresponding to a specific gravity of 271. Data for standard alloys are shown in Table 3-6. The approximate weight for aluminum, including its alloys, is one-tenth of a pound per cubic inch (see Table 3-6).

3-17. HEAT TREATMENT OF ALUMINUM ALLOYS.

NOTE

SAE-AMS-2772, Heat Treatment of Aluminum Alloys, will be the control document for heat treatment of Aluminum Alloys used on aerospace equipment. For complete description of aluminum heat treat requirements, refer to latest issue of SAE-AMS-2772.

3-18. GENERAL. There are two types of heat treatment applicable to aluminum alloys. They are known as solution and precipitation heat treatment. Some alloys such as 2017 and 2024 develop their full mechanical properties as a result of solution heat treatment followed by 96 hours (natural precipitation) aging at room temperature. Other alloys, such as 2014, 7075, and 7178 require solution heat treatment and aging (precipitation heat treatment) for specific length of time at a definite temperature (see Table 3-11).

NOTE

Additional Heat Treatment information is discussed in Section IX.

3-19. Solution heat treatment is a process where the alloying elements enter into solid solution in the aluminum at critical temperatures. It has been found that those alloying elements which increase the strength and hardness are more soluble in solid aluminum at high temperature than at low. To complete the solution often the metal is held at high temperatures for sufficient time; it is then quenched rapidly in cold water to retain this condition. Immediately after quenching, the alloy is in an unstable condition, because it consists of a supersaturated solid solution of the hardening agent. Upon standing at room temperature the hardening constituent in excess of that which is soluble at room temperature precipitates. The precipitate is in the form of extremely fine particles which due to their “keying” action, greatly increase their strength. This is in effect a method where the molecules of the aluminum and alloying elements are realigned to increase the strength and hardness of some aluminum alloys.

3-20. PRECIPITATION (AGE) HARDENING. This phase of heat treatment consists of aging material previously subjected to solution heat treatments by natural (occurs at room temperature) or artificial aging. Artificial aging consists of heating aluminum alloy to a specific temperature and holding for a specified length of time. During this hardening and strengthening operation the alloying constituents in solid solution precipitate out. As precipitation progresses, the strength of the material increases until the maximum is reached. Further aging (overaging) causes the strength to decline until a stable condition is obtained. The strengthening of the material is due to the uniform alignment or formation of the molecule structure of the aluminum and alloying element.

3-21. Artificial aged alloys are usually slightly “overages” to increase their resistance to corrosion, especially the high copper content alloys. This is done to reduce their susceptibility to intergranular corrosion caused by under-aging.

3-22. Natural aging alloys can be artificially aged, however, it increases the susceptibility of the material to intergranular corrosion. If utilized it should be limited to clad sheet, extrusions and

similar items. For aging treatment, temperature and times see Table 3-11.

3-23. SOLUTION HEAT TREATMENT. As previously pointed out it is necessary that solution heat treatment of aluminum alloys be accomplished within close limits in reference to temperature control and quenching. The temperature for heat treating is usually chosen as high as possible without danger of exceeding the melting point of any element of the alloy. This is necessary to obtain the maximum improvement in mechanical properties.

3-24. If the maximum specified temperature is exceeded eutectic melting will occur. The consequence will be inferior physical properties, and usually a severely blistered surface. If the temperature of heat treatment is low, maximum strength will not be obtained.

3-25. Heating Time. The heating time commonly called the "soaking time" required to bring about solution increases with the thickness of the section or part to be heat treated. Solution heat treatment should be held to the minimum time required to obtain the desired physical properties. In many instances the above will require sample testing to determine the exact solution time. For the recommended approximate soaking time for various alloys see Table 3-8.

3-26. The time at temperature (soaking time) is measured from the time the metal reaches the minimum limit of the temperature range. In the case of thick material the controlling factor would be when the center (core) reached the minimum temperature. The soaking period will vary from 10 minutes for thin sheet to approximately 12 hours for the thicker materials, such as heavy forgings. A general guide to use is approximately one hour for each inch of cross-sectional thickness. It is recommended that thermocouple be placed in the coldest part of the load to determine the period required to bring the load to the correct temperature (soaking temperature).

3-27. The soaking temperature required is selected to put all of the soluble elements into solid solution. With clad materials, prolonged heating may defeat the purpose of the cladding by excessive diffusion of copper and other soluble elements into the cladding.

3-28. RE-SOLUTION HEAT TREATMENT. The bare heat-treatable alloys can be solution heat treated repeatedly without harmful effects other than high temperature oxidation. The oxidation can be retarded by using either sodium or potassium fluoborate during the heating cycle.

3-29. For clad sheet the number of solution heat-treatment is limited due to the increased diffusion of the core and cladding. See Table 3-12 for the recommended reheat-treatment times.

3-30. QUENCHING. The basic purpose for quenching is to prevent the immediate re-precipitation of the soluble constituents after heating to solid solution.

3-31. To obtain optimum physical properties of aluminum alloys, rapid quenching is required. The recommended time interval between removal from the heat and immersion is 10 seconds or less. Allowing the metal to cool before quenching promotes intergranular corrosion and slighty affects the hardness. This is caused by re-precipitation along grain boundaries and in certain slip planes. For specific quench delay see Table 3-10.

3-32. There are three methods employed for quenching. The one used depends upon the item, alloy and properties desired.

3-33. Cold Water Quenching. Small articles made from sheet, extrusions, tubing and small fairing are normally quenched in cold water. The temperature before quenching should be 85°F or less. Sufficient cold water should be circulated within the quenching tanks to keep the temperature rise under 20°F. This type of quench will insure good resistance to corrosion and particularly important when heat-treating 2017 and 2024.

3-34. Hot Water Quenching. Large forgings and heavy sections can be quenched in (150° - 180°F) or boiling water. This type of quench is used to minimize distortion and cracking which are produced by the unequal temperatures obtained during the quenching operation. The hot water quench will also reduce residual stresses which improves resistance to stress corrosion cracking.

3-35. Spray Quenching. Water sprays are used to quench parts formed from alclad sheet and large sections of most alloys. Principal reasons for using this method is to minimize distortion and to alleviate quench cracking. This system is not usually used to quench bare 2017 and 2024 due to the effect on their corrosion resistance. The parts quenched by this media should pass the corrosion test required for the item involved; (see specification SAE-AMS-2772).

3-36. STRAIGHTENING OF PARTS AFTER SOLUTION HEAT TREATMENTS. It will be necessary to straighten some parts after heat treating due to warping produced by the process. These

parts are usually straightened by restriking or forming. It is desirable to place these parts in refrigeration immediately after quenching to retard natural aging until such time straightening is accomplished. A temperature of 32°F or below will delay or retard natural aging for approximately 24 hours, lower temperatures will delay the aging longer.

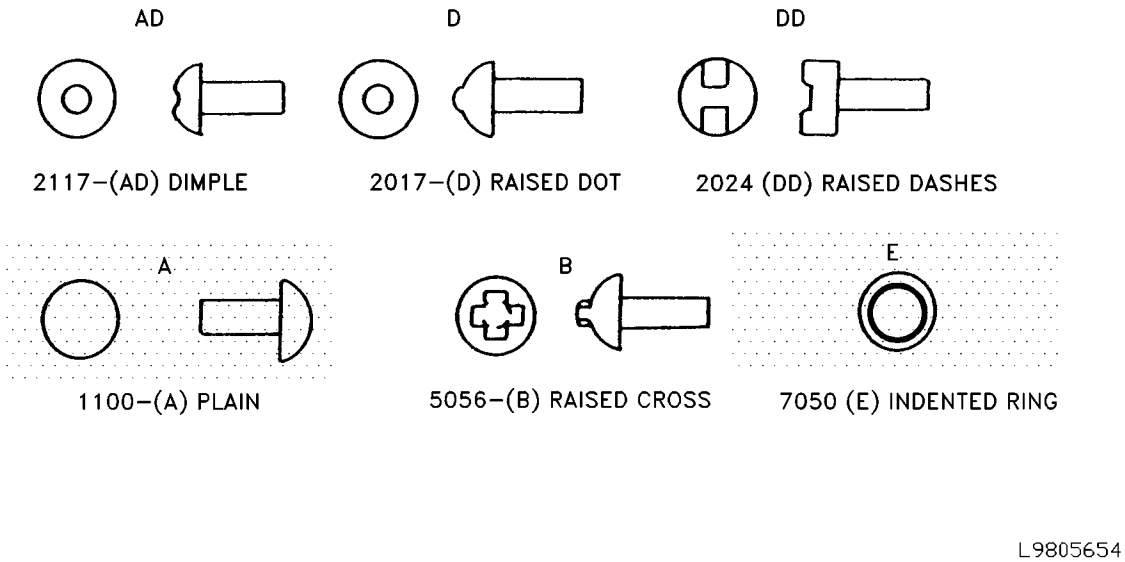

Figure 3-1. Head to Alloy Identification Method

3-37. HEAT TREATMENT OF RIVETS. The heat-treatable alloys commonly used for rivets are 2117, 2017, and 2024.

a. 2117 Rivets. If supplied in T-4 temper no further treatment is required. The rivet is identified by a dimple in the center of the head (see Figure 3-1, item AD for head identification).

b. 2017 or 2017-T4 (D) Rivets. Heat treat prior to installation by heating to 940°F ± 10°F for 30 minutes in a circulating air furnace, 1 hour in still air furnace, or 30 minutes in a molten salt bath and quench in water. These rivets must be driven within 20 minutes after quenching or refrigerate at 32°F or lower which will delay the aging time 24 hours. If either time is exceeded reheat treatment is required. See Figure 3-1, item D for head identification. It is noted the D rivets may also be used in the age hardened condition.

c. 2024-0 or 2024-T4 (DD) Rivets. The same conditions apply for these rivets as for the 2017 (D) except heat treat at 920°F ± 10°F. See Figure 3-1, item DD for head identification.

d. 1100 and 5056 Rivets. These do not require heat treatment, install as received. See Figure 3-1, item A and 3-1, item B for identification.

CAUTION

Rivets which have been anodically oxide coated should not be reheat-treated in direct contact with molten salts more than 5 times.

e. 7050 (E) Rivets. These do not require heat treatment, install as received. See Figure 3-1, item E for head identification.

f. D/DD Rivets. These may be stored in refrigerators which ensure that the rivet temperature does not rise above minus 10°F. Rivets held at minus 10°F or below can be retained for use indefinitely. When the rivets are transported, their temperature will be maintained at minus 10°F or below by being carried in refrigerated boxes.

(1) Quality control shall be responsible for periodically checking the temperature of each refrigerator and for prohibiting the use of rivets in any box when the temperature becomes excessive.

(2) Each refrigerator shall have the rivets removed and be thoroughly cleaned at least once every six months. A tag or placard that denotes the next cleaning date shall be attached to each refrigerator.

(3) Rivets which remain out of refrigeration for 30 minutes or more shall be reheat treated. These rivets can be reheat treated a maximum of three times.

3-38. ANNEALING. Aluminum alloys are annealed to remove the effects of solution heat treatment and strain hardening. Annealing is utilized to help facilitate cold working. Parts work hardened during fabrication are annealed at various stages of the forming operation so that complicated shapes can be formed. During prolonged forming or stamping operations the metal becomes strain hardened (commonly called "work hardened" and upon the performance of additional work it will split or crack.) When the above is encountered it is usually necessary to anneal the part one or more times at progressive stages of the forming operation, if the part is to be successfully completed.

CAUTION

Annealed aluminum parts shall not be used for parts or fittings on aircraft or missiles unless specified by drawings or other approved engineering data.

3-39. Time at temperature. This factor will vary depending upon the type of anneal (partial or full), metal, thickness, method of furnace charging and similar factors. Avoid excessive time at temperature to prevent growth, diffusion and discoloration, especially when annealing clad alloys.

3-40. When fully annealing, no attempt should be made to shorten the annealing cycle because the soluble constituents go into solution as the temperature is increased. If the material is then cooled rapidly the soluble constituents remain in solution and the material does not attain fully annealed mechanical properties.

3-41. Annealing and subsequent forming of material previously heat treated should be avoided if conditions and time permit. The recommended method is to repeat the solution heat treatment and immediately perform the forming or drawing operation.

3-42. Recommended times and temperatures for annealing various alloys are as follows:

a. Annealing of Work-Hardened Alloys. All of these alloys except 3003 are annealed by heating to 650°F and no higher than 775°F, holding at temperature until uniform temperature has been established throughout the furnace load, and cooling in air or in the furnace. Annealing temperature shall not exceed 775°F to prevent excess oxidation and grain growth. The 3003 alloy is annealed by heating to 775°F at a relatively rapid rate and holding at the minimum soaking period necessary to attain temperature uniformity and then cool as cited above.

b. Annealing of heat-treated alloys (wrought). These alloys (except 7075) are annealed by heating to 775°F for not less than 1 hour and most instances 2-3 hours. Material is then cooled at a rate of no greater than 50°F per hour until the temperature is 500°F or below. Rate of cooling below 500°F is not restricted; cool as desired. Alloy 7075 is fully annealed by heating to 775°F - 850°F (higher temperature utilized for material having smaller amount of cold work), soaking for 2 hours at temperature, cooling in air, reheating to 450°F, holding at this temperature for 6 hours and then cooling to room temperature. Alternate 7075 annealing methods:

(1) If forming is to be accomplished immediately after annealing, heat to 775°F, 2-3 hours; air cool.

(2) If alloy is to be stored for an extended period before forming, heat to 670°F - 775°F, 2 hours; cool in air; reheat to 450°F; hold at this temperature for 4 hours and then cool in air.

(3) Intermediate anneal during cold working of "O" condition material; heat to 670° - 700°F, 1/2 hour maximum, or heat to 910° - 930°F until uniform temperature is attained; cool in air. A part shall not be annealed using the 910° - 930°F temperature more than 3 times.

c. Annealing of cast alloys. Castings are annealed by heating to 650° - 750°F holding for approximately 2 hours, and cooling to room temperature. The purpose of such annealing are for the relief of stresses and attainment of dimensional stability.

d. Partial annealing of heat-treated material. When heat-treated materials are annealed as specified for annealing of the work-hardened alloys, the effect of heat-treatment is reduced considerably, but not completely. The partially annealed

material is only to be utilized when moderate but not secure operations are to be performed. If difficulty is experienced with forming partially annealed material, recommend that "O" fully annealed material be utilized.

3-43. Heat treating temperatures and times. Aluminum alloy should be heat treated at the temperature given in Table 3-7. The load should be held within the heat-treatment range (after the coldest part has reached the minimum of the range) for a sufficient time to insure that specified properties will be developed. In some cases sample testing will be required to ascertain that specified properties are developed. Suggested soaking periods are given in Tables 3-8 and 3-9 for the common alloys. In instances where new alloys are involved it will be necessary to consult the specification for the alloys, Specification SAE-AMS-2772 or the manufacturer for the appropriate heat treat data. In case of conflict the correct Military/Federal specification will be the governing factor.

3-44. QUENCHING. To effectively obtain the desired qualities in aluminum alloys it is necessary that the interval between removing the charge from the furnace and immersion in the quenching water be maintained at the absolute minimum (See Table 3-10).

3-45. Wrought alloy products must be quenched by total immersion in water or by a drastic spray quench. Forgings of 2014, 2017, 2117 and 7075 are quenched in water at temperatures in excess; of 100°F. 7079 forgings are generally quenched in water at temperatures less than 100°F to obtain optimum mechanical properties, however a hot water quench (180°F) should be used whenever possible providing the lower strength associated with the quench is satisfactory. The hot water quench lowers the residual stresses considerably. This is desirable from the point of view of reducing stress corrosion susceptibility.

3-46. Charging of furnace and baths. Individual pieces of materials or parts should be racked or supported to prevent distorting if possible and permit free access to the heating and quenching medium. The above is necessary to maintain the form of the material involved and to facilitate heating to the specified temperature and quenching rapidly. To prevent distortion it is necessary in some cases to provide jig and fixture support for complex contoured (formed) parts. However, the jig used shall be so constructed that is will not restrict the contact required with the heating medium of the part being treated.

NOTE

Parts formed that are unavoidably distorted should be reformed immediately after quenching.

3-47. When heat treating clad sheet material, the size and spacing of the load will be arranged to permit raising to the heat treatment temperature range in the minimum time. The mixing of different thicknesses of clad material when charging heat-treatment furnaces will be avoided, in order to help prevent diffusion of the cladding, especially in the case where very thin to thick materials are involved.

CAUTION

Heat-treating operations will be performed on the complete individual part or piece of material never on a portion only. This should be accomplished in such a manner that will produce the utmost uniformity. Maximum quench delay for immersion quenching is shown by Table 3-10.

3-48. Wrought alloy products may be quenched using high velocity, high volume jets of cold water where the parts are effectively flushed in a specially constructed chamber, provided that the parts will pass the corrosion test set forth in Specification SAE-AMS-2772, Metal Specification and the mechanical property requirements of the applicable material specification.

Table 3-8. Soaking Time for Solution Heat Treatment of All Wrought Products

THICKNESS (INCHES) (MIN. THICKNESS OF THE HEAVIEST SECTION)	SOAKING TIME (MINUTES) SALT BATH MIN	SALT BATH MAX (Alclad Only)	AIR FURNACE MIN	AIR FURNACE MAX (Alclad)
0.016 and under	10	15	20	25
0.017 - 0.020	10	20	20	30
0.021 - 0.032	15	25	25	35
0.033 - 0.063	20	30	30	40
0.064 - 0.090	25	45	35	45
0.091 - 0.125	30	40	40	50
0.126 - 0.250	35	45	50	60
0.251 - 0.500	45	55	60	70
0.501 - 1.000	60	70	90	100
1.001 - 1.500	90	100	120	130
1.501 - 2.000	105	115	150	160
2.001 - 2.500	120	130	180	190
2.501 - 3.000	150	160	210	220
3.001 - 3.500	165	175	240	250
3.501 - 4.000	180	190	270	280

3-49. Castings and forgings quenching. Casting should be quenched by total immersion in water at 150° to 212°F. Forgings should be quenched by total immersion in water at no more than 180°F. Forgings and impact extrusion supplied in T41 or T61 should be quenched in boiling water. However, if conditions warrant castings or forgings may be quenched by complete immersion in cold water.

3-50. Small parts such as rivets, fasteners, washers, spacers, etc., should be quenched by dumping into cold water.

CAUTION

Rivets, fasteners, washers and other small parts which have been anodically oxidecoated should not be heat treated indirect contact with molten salts or more than 5 times by this medium.

NOTE

Quench delay time begins at the instant furnace door begins to open or at the instant any portion of a load emerges from a salt bath and when last portion of the load is immersed in the (water) quench tank. The maximum quench delay may be exceeded (usually confined to large sections or loads) if temperature will be above 775°F when quenched.

Table 3-9. Soaking Time for Solution Treatment of Cast Alloys

ALLOY	TIME (HOURS)
SAND CAST ALLOYS	
122	6-18
142	2-10
195	6-18
S195 (105)	6-24
220	12-24
319	6-18
355	6-18
356	6-18
PERMANENT MOLD CAST ALLOYS	
122	6-18
A132	6-18
142	2-10
B195	4-12
355	6-18
356	6-18

Table 3-10. Recommended Maximum Quench Delay, Wrought Alloys (For Immersion Type Quenching)

NOMINAL THICKNESS (INCHES)	MAXIMUM TIME (SECONDS)
up to 0.016	5
0.017 to 0.031	7
0.032 to 0.091	10
0.091 and over	15

3-51. HEAT TREATMENT.

3-52. PRECIPITATION (ARTIFICIAL AGE) HEAT TREATMENT. Precipitation heat treatment of many aluminum alloys is necessary to obtain the required properties. Heating of some aluminum alloys bare or alclad at an elevated temperature, but well below the annealing temperature, after solution heat treatment will result in tensile and yield strength well above those obtained by room temperature aging. The above will also apply to alloy 2024. However, this process will reduce the elongation factor of the material and increase resistance to forming. Therefore, most forming operations should be performed prior to this stage of treatment.

3-53. Mechanical properties obtained from precipitation (aging) are dependent on the amount of cold work present in the material at the time of aging. The selection of material for various uses will therefore be governed by, the severity of the cold work to be performed, strength and condition of the material required.

3-54. Annealing or solution heat treating will remove any properties developed as a result of cold working the material. Subsequent heat treatment and aging of annealed material or aging of solution heat treated material will result in T-6 condition, provided the material is not cold worked prior to aging. The higher strength conditions can only be obtained by a controlled amount of cold work prior to aging. Conditions T-81 or T-86 would necessitate a cold work percentage of approximately 1% for T-81 and 6% for T-86 after solution heat treated and prior to aging.

3-55. Field accomplishment of the cold work required to produce the higher strength conditions is considered impractical. This is due to the amount and types of equipment necessary to stretch or roll the material in order to produce these conditions.

3-56. HEAT TREATING EQUIPMENT. Equipment and heating media used are divided into two distinct groups. They are liquid baths and controlled atmosphere. Either method has certain advantages over the other and it generally is advisable to weigh the advantages desired and consider environmental conditions.

3-57. The above are heated by gas, electricity and oil regardless of the method utilized it must be demonstrated that satisfactory results are obtained and the material is not injured.

3-58. AIR FURNACES. Air furnaces are ideal for precipitation (aging), thermal treatments and annealing. These furnaces are also used for solution heat treating. The initial cost of these type furnaces is higher than for the salt bath types, but they are usually more economical to operate, safer, cleaner and more flexible. Air furnaces used for heat treatment of aluminum alloy should be of the recirculating air type. The heated air in this type furnace is recirculated at high velocities to obtain a rapid heating cycle and uniform temperatures. The products of combustion must be excluded from the furnace atmosphere to help avoid high temp oxidation and atmosphere contamination.

3-59. SALT BATHS. The salt bathe method has certain advantages over the air furnace. However, the advantages are usually confined to solution heat treatment only. Associated advantages are uniform temperature without excess danger of high temperature oxidation and faster heating which reduces the time required to bring the load to temperature. This method is adaptable for solution heat treating small parts, large thin sections and missed loads. The above advantages may be completely nullified by the slower quench caused by the necessary arrangement of equipment, fire and explosion hazards, and decomposition of the sodium nitrate which when dissolved in quenching water forms a compound that attacks aluminum alloys. The addition of potassium dichromate (approximately 1/2 ounce per hundred pounds of nitrate) tends to inhibit the attack.

3-60. Hollow core casting or parts where the salts are likely to be difficult or impossible to remove should not be treated by bath salt.

Table 3-11. Precipitation (Aging) Treating Temperatures, Times and Conditions

ALLOY & TEMPER OR COND BEFORE AGING	AGING TIME (HOURS)2/	AGING TEMP (DEGREES F)2/	TEMPER AFTER AGING
WROUGHT ALLOYS (EXCLUDING FORGINGS)			
2017 - as quenched(w)	96	room	2017-T4
2117 - as quenched(w)	96	room	2117-T4
2024 - as quenched(w) 3/	96	room	2024-T4
6061 - as quenched(w)	96	room	6061-T4
6061-T4	71/2 - 81/2	340-360	6061-T6
2020-W	18	310-360	2020-T6
2024-T4 1-T42	16	370-380	2024-T6 1-T62
2024-T4 (Alternate for sheet)	11-13	370-380	2024-T6
2024-T3	11-13	370-380	2024-T81
2024-T36	7 - 9	370-380	2024-T86
2014-T4 1-T42	8 - 12	305-330	2014-T6 1-T62
2014-T4 (Alternate for Plate)	17-20	305-330	2014-T6
2219-T31/T351	17-19	350	2219-T81/T851
2219-T4	35-37	375	2219-T62
2219-W	96	room	2219-T4
6066-T4	71/2 - 81/2	340-360	6066-T6
6061-T4	71/2 - 81/2	340-360	6061-T6
7050-W	6-8	250 followed by 350, 6-8 hours	7050-T74
7075-W 1/	22 Minimum	240-260	7075-T6
7178-W	22 Minimum	240-260	7178-T6
6063-F	1-2	440-460	6063-T5
7079 - as quenched(w)	5 days at room temperature following 48 hours at 230-250 degrees F		
7475-W, Plate	24-25	250	7475-T6
7475-W, Sheet	3-5	250 followed by 315, 3-3.25 hours	7475-T61
FORGING ALLOYS			
2014-T4	5-14	340-360	2014-T6
2014 - as quenched	96 Minimum	room	2014-T4
2017 - as quenched	96 Minimum	room	2017-T6

Table 3-11. Precipitation (Aging) Treating Temperatures, Times and Conditions - Continued

ALLOY & TEMPER OR COND BEFORE AGING	AGING TIME (HOURS)2/	AGING TEMP (DEGREES F)2/	TEMPER AFTER AGING
2018-T4	4-12	330-350	2018-T6
2025-T4	6-14	330-350	2025-T6
4032-T4	4-12	330-350	4032-T6
6151-T4	4-12	330-350	6151-T6
7075-W	22 Minimum	230-260	7075-T6
X7079	5 days at room temperature followed by 48 hours at 230-250 degrees F		X7079-T6
SAND CAST ALLOYS			
142-T41	1-3	400-450	142-T61
195-T4	1-3	300-320	142-T6
S195-T4	1-4	300-320	S195-T6
220-W	96 Minimum	room	220-T4
319-T4	1-6	300-320	319-T6
335-T4	1-6	300-320	335-T6
356-T4	1-6	300-320	356-T6
356-F	6-12	430-450	356-T6
40	9-11	345-365	40-E
40-	21 days	room	40-E
PERMANENT MOLD CAST ALLOYS			
142-T41	1-3	400-450	142-T61
B195-T4	1-8	300-320	B195-T6
319-T4	1-6	300-330	319-T6
355-T4	1-6	300-320	355-T6
356-T4	1-6	300-320	356-T6
A132-T45	14-18	300-350	A132-T65

1/ Alternate aging treatment for 7075-W sheet only; in thicknesses less than 0.500 inch: Heat at 230°-250°F for 3-4 hours, then heat 315°-335°F for 3-4 hours. The temperature may be raised directly from the lower to the higher temperature, or load may be allowed to cool between the two steps of the treatment.

2/ Time is soak time after recorder is at temperature, for 0.500 inch thickness or less. Add 1/2 hour for each additional 1/2 inch of thickness.

3/ The 96 hour minimum aging time required for each alloy listed with temper designation W is not necessary if artificial aging is to be employed to obtain tempers other than that derived from room temperature aging. (For example, natural aging (96 hours) to achieve the -T4 or -T42 temper for 2014 alloy is not necessary prior to artificial aging to obtain a -T6 or -T62 temper.)

Table 3-12. Reheat Treatment of Alclad Alloys

THICKNESS (INCHES)	MAXIMUM NO. OF REHEAT TREATMENT PERMISSIBLE
0.125 and less	1
over 0.125	2

NOTE

Heat treatment of a previously heat-treated material is classified as a reheat treatment. Therefore, the first heat treatment of material purchased in the heat treated condition is a reheat treatment. Insofar as this chart is concerned annealing and precipitation treatments are not considered heat treatments.

3-61. Salt baths must be operated with caution to prevent explosions as any water on the material being treated is instantly transformed to steam upon imersion in the salt bath.

3-62. Nitrate charged salt baths should not be used to heat-treat aluminum alloys types 5056 and 220 due to the fact that the bath compound will attack the alloy.

3-63. Temperature Control and Uniformity. Good temperature control is essential to produce the exacting temper requirements for superior quality material. Upon bringing a change to temperature, the furnace and the load should be controllable with ±5°F of the required temperature range. The design and construction of the furnaces and baths should be such that during the recovery and soaking period, the air and metal (load) temperature at any point in the working or soaking area shall not exceed the maximum soaking temperature (see Table 3-7) for the specific alloy being heat treated.

3-64. Furnace temperature survey. Furnace equipment shall be installed with the necessary furnace control, temperature measuring, and recording instruments to assure and maintain accurate control.

3-65. Upon the initial installation and after each change is made in the furnace which might affect the operational characteristics a temperature survey should be made. The temperatures should be checked at the maximum and minimum required for solution and precipitation heat treatment for which the furnace is to be used. A minimum of 9 test locations within the furnace load area should be checked, one in each corner, one in the center and one for each 25 cubic feet of air furnace volume up to the maximum of 400 cubic feet. For salt bath the same as above except one test location for each 40 cubic feet of air volume, 40 test locations are recommended. Other size furnaces should be checked with a ratio of test locations in accordance with those previously cited. A monthly survey should be made after the initial survey, unless separate load thermocouples are employed, to record actual metal temperatures. However, periodic surveys shall be made as outlined for the initial survey. The monthly survey should be made at one operating temperature for solution treatment and one for precipitation heat treatment. There should be a minimum of 9 test locations with at least one for each 40 cubic feet of heat treating volume. For all surveys, the furnaces should be allowed to heat to point of stabilization before commencing the survey. The temperature of all test locations should be determined at 5 to 10 minute intervals after insertion of the temperature sensing elements in the furnace. Temperature readings should be taken for a sufficient length of time after thermal equilibrium to determine the recurring temperature pattern. After all temperature sensing elements have reached equilibrium, the maximum temperature variation of all elements shall not exceed 20°F and at no time after equilibrium is reached should the temperature readings be outside the solution heat treating or precipitation range being surveyed.

3-66. Temperature measuring instruments used for furnace control shall not be used to read the temperature of the test temperature sensing elements.

3-67. Furnace thermocouple and sensing element should be replaced periodically. This is necessary due to oxidation and deterioration of the elements.

3-68. Salt Bath Testing - Temperature uniformity in a salt bath may be determined by use of a temperature sensing element enclosed in a suitable protected tube. The temperature sensing element should be held in one position until thermal equilibrium has been substantially reached and reading made. The temperature sensing element should then be placed in a new location and the procedure repeated. These operations should be repeated until the temperature in all parts of the bath have been determined. The maximum variation indicated by reading from the various locations in the load zone shall not exceed 20°F and no reading shall be outside the heat treating range specified for the materials involved.

3-69. At this point it should be explained that a substantial amount of the difficulties encountered in heating aluminum alloys is due to improper or inadequate temperature control and circulation of heating medium. When difficulties arise the function of these units should be checked prior to performing other system test.

3-70. FABRICATION.

3-71. This portion is intended to provide some of the information required to fabricate the various aluminum products into parts and assemblies. Aluminum is one of the most workable of all the common metals. It can be fabricated into a variety of shapes by conventional methods.

3-72. The formability varies considerably with alloy and temper. Specific application usually depends on the shape, strength and temper of the alloy. The preceeding will necessitate that the mechanic be well trained to cope with the variables associated with this material especially when the end use of the item is an aircraft or a missile.

3-73. FORMING SHEET METAL.

3-74. GENERAL. The forming of aluminum (1100) is relatively easy, using approximately the same procedures as those used for common steel except that care must be taken to prevent scratching. Do not mark on any metal surface to be used as a structural component with a graphite pencil or any type of sharp pointed instrument. Use pencil, Aircraft Marking, Specification MIL-P-83953, NSN 7510-00-537-6928 (Black),7510-00-537-6930 (Yellow), and 7510-00-537-6935 (Red). All shop equipment, tools and work area should be kept smooth, clean and free of rust and other foreign matter.

3-75. Alloyed aluminum (2024, 7075, 7178, etc.) are more difficult to form, and extensive control is required to prevent scratching and radii cracking. Scratching will make forming more difficult plus it provides an easy path for corrosion attack, especially on clad materials. The clad coating referenced is usually a sacrificial corrosion resisting aluminum alloy coating sandwiched metalurgically to an alloyed core material. The thickness of the coating will depend on the thickness of the sheet or plate. The nominal cladding thickness is 4% of composite thickness for material under 0.063 inch; 2.5% for material in the range of 0.063 - 0.187 inch and 1.5% for material 0.188 inch and thicker.

3-76. The following general rules should be employed in the handling and forming operation:

a. Provide clean area; free of chips, grit and dirt and other foreign material.

b. Provide clean smooth (rust free) and adaptable forming equipment.

c. Sheared or cut edges shall be sanded and filed or polished, prior to bending or forming.

d. Use only straight and smooth forming dies or brake leafs of the correct radius which are free of nicks, burrs and sharp edges.

e. Form material across the direction of grain flow when possible.

f. Material should be of the correct temper, thickness and alloy in the range of "formable" material.

3-77. For intricate forming operations it is necessary to use annealed (Con"O") material and final strength developed by heat treating after the forming has been accomplished. Heat-treated alloys can also be formed at room temperature immediately after quenching ("W"temper), which is much more formable than the fully heat-treated temper. The part is then aged to develop full strength. The forming operation should be performed as soon after quenching as possible, in view of the natural aging that occurs at room temperature on all the heat treatable alloys. The natural aging can be delayed to a certain extent by placing the part in a cold storage area of 32° or lower. The lower the temperature the longer the delay to a point where maximum delay is obtained.

3-78. BENDING. Bending is classified as single curvature forming. Upon bending sheet metal, bar or rod, the material at the bends flows or deforms i.e., the material adjacent to the other surface of the bend is under tension and the length is increased due to stretching and the material adjacent to and on the inner surface is under compression and the length is decreased.

3-79. The most common problems encountered in practice are springback and cracking within the bend area. Problems associated with bend cracking are usually a result of improper bend radii, rough edges of material being formed or forming equipment and bending parallel to direction of grain flow. For the approximate bend radius to use in bending various thicknesses and types of aluminum see Table 3-13. Actual practice may reveal that a larger or a smaller radius may be used in some instances. If tighter bend radii is required, then fabricators should proceed with additional caution and if needed, should seek assistance of engineering or laboratory metallurgists.

3-80. Difficulties encountered with springback are most commonly associated with bending of the

stronger alloys, especially those having high yield strength. Springback problem associated with this material can be overcome to a certain degree by overforming. The amount of overforming utilized will depend on the temper and the alloy; the softer the material the less springback compensation required. Other means of reducing springback is to bend the material in the soft condition (Condition "O") or immediately after quenching and reducing the thickness or the radius if allowed. Avoid reducing radii to the point that grain separation or bend cracking results.

Table 3-13. Cold Bend Radii (Inside) for General Applications

Alloy and Temper	Sheet Thickness = T (Inches)						
	0.016	0.032	0.040	0.063	0.125	0.1875	0.250
1100-0	0.02	0.03	0.03	0.06	0.125	0.187	0.250
3003-0	0.03	0.03	0.06	0.06	0.160	0.187	0.250
5052-0	0.03	0.03	0.06	0.06	0.160	0.187	0.250
6061-0	0.03	0.03	0.06	0.06	0.16	0.1875	0.250
2014-0	0.03	0.06	0.09	0.09	0.19	0.312	0.44
2219-0	0	0	--	0.5-1.5T	0.5-1.5T	0.5-1.5T	1-2T
7075-0	0.03	2T	2T	2T	2T	21/2T	3T
7178-0	0.03	2T	2T	2T	2T	21/2T	3T
1100-H12	0.02	0.03	0.03	1T	1T	11/2T	11/2T
3003-H12	0.03	0.03	0.03	1T	1T	11/2T	11/2T
5052-H32	0.03	0.06	0.06	11/2T	2T	21/2T	2T
1100-H16	0.03	0.06	2T	2T	2T	21/2T	3T
3003-H16	0.03	0.06	2T	2T	21/2T	4T	5T
5052-H36	0.03	0.06	2T	2T	21/2T	4T	5T
	0.016	0.032	0.064	0.125	0.1875	0.250	
1100-H18	0.03	2T	2T	21/2T	3T	31/2T	
3003-H18	0.03	2T	2T	21/2T	3T	41/2T	
5052-H38	0.03	2T	3T	4T	5T	6T	
6061-T4	0.03	2T	2T	2T	3T	4T	
6061-T6	0.03	2T	2T	2T	3T	4T	
2219-T4	0-1T	0-1T	1-2T	1-2T	1.5-2.5T	1.5-2.5T	
2219-T62,T81	2-3.5T	2.5-4T	3.5T	4-6T	4-6T	5-7T	
2024-T4	0.06	4T	4T	5T	6T	6T	
2024-T3	0.06	4T	4T	5T	6T	6T	
2014-T3	0.06	3T	4T	5T	6T	6T	
7075-T6	0.06	5T	6T	6T	6-8T	9-10T	
7178-T6	0.06	5T	6T	6T	6-8T	9-10T	
7050-T7	--	--		--	8T	9T	9.5T
7475	--	--		--	--	--	--

3-81. DRAW FORMING. Draw forming is defined as a method where a male die (punch) and a female die is used to form a sheet blank into a hollow shell. Draw forming is accomplished by forcing the male die and the metal blank into the female die. Generally mechanical press either single or double action and hydraulic presses are used to perform the drawing operation. Results will depend on die design, radii of die forming surfaces, finish of die, surface clearance between punch and female die, blank hold down pressure, shape of blank, material allowance on blank, elongation factor of material, temper, shape of part being formed, drawing speed, and lubricant. Optium results usually requires experimentation and adjustment of one or more of these factors. Drawing of very deep shells require more experimentation and the utilization of a succession of limit draws. Because of the work hardening resulting from each draw, reduction in successive draws must be less. In severe conditions an intermediate anneal is sometimes used. Condition "O" material of the heat treatable alloys can be heat treated after drawing to obtain higher strength and to relieve the effect of work hardening. However, the non-heat treatable alloys can only be annealed to relieve the effect of work hardening. This material should not be annealed if high strength is the major requirement.

3-82. The recommended material to manufacture drawing dies is hardened tool steel for large scale production; kirksite and plastic for medium or short run production; and phenolic and hardwood for piece production.

3-83. STRETCH FORMING. This process involves stretching a sheet or strip to just beyond the elastic limit where permanent set will take place with a minimum amount of springback. Stretch forming is usually accomplished by gripping two opposite edges fixed vises and stretching by moving a ram carrying the form block against the sheet. The ram pressure being sufficient to cause the material to stretch and wrap to the contour of the form block.

3-84. Stretch forming is normally restricted to relatively large parts with large radii of curvature and shallow depth, such as contoured skin. The advantage is uniform contoured parts at faster speed than can be obtained by hand forming with a yoder hammer or other means. Also, the condition of the material is more uniform than that obtained by hand forming. The disadvantage is high cost of initial equipment, which is limited to AMA level repair facilities.

3-85. Material used for stretch forming should be limited to alloys with fairly high elongation and good spread between yield and tensile strength. Most of the common alloys are formed in the annealed condition. It is possible to stretch form the heat treatable alloys in tempers T4 or T6, where the shape is not too deep or where narrow width material is used. For the deeper curved shapes, the material is formed in the annealed "O"temper, heat treated and reformed, to eliminate distortion resulting from heat treatment. As previously stated the material should be reformed as fast as possible after heat treatment. In some instances the material is formed immediately after heat treating and quenching. Selection of a system or condition of material to be utilized will require experimentation and the subsequent utilization of the system that gives the best results.

3-86. HYDRAULIC PRESS FORMING. The rubber pad hydropress can be utilized to form many varieties of parts from aluminum and its alloys with relative ease. Phenolic, masonite, kirksite and some types of hard setting molding plastic have been used successfully as form blocks to press sheet metal parts such as ribs, spars, fans, etc. The press forming operations are usually accomplished by setting the form block (normally male) on the lower press platen and placing a prepared sheet metal blank on the block. The blank is located on the block with locating pins, to prevent shifting of blank when the pressure is applied (the sheet metal blank should be cut to size and edges deburred prior to pressing). The rubber pad filled press head is then lowered or closed over the form block and the rubber envelope, the form block forcing the blank to conform to the form blocks contour. This type forming is usually limited to relatively flat parts having flanges, beads and lightening holes. However, some types of large radii contoured parts can be formed with a combination of hand forming and pressing operations. It is recommended that additional rubber be supplemented in the form of sheets when performing the above to prevent damage to the rubber press pad. The rubber sheet used should have a shore hardness of 50-80 durometers. The design of foam block for hydropress forming require compensation for springback even through the material normally used is Condition "O" or annealed. Normal practice is to under cut the form block 2-7° depending on the alloy and radii of the form block.

3-87. DROP HAMMER FORMING. The drop hammer can be used to form deep pan shaped and beaded type parts. Kirksite with a plastic surface insert is satisfactory for male and female dies. The surface of kirksite dies used without plastic insert should be smooth to prevent galling and scratching of the aluminum surface. When forming deep pans and complicated shaped parts it is

often necessary to use drawings rings, pads or 2-3 stage dies. An intermediate anneal is sometimes used to relieve the hardened condition (cold work) resulting from the forming operation.

3-88. JOGGLING. A joggle is an offset formed to provide for an overlap of a sheet or angle which is projecting in the same plain. The inside joggle radii should be approximately the same as used for straight bending. Joggle run out or length as a normal rule should be three times the depth of the joggle for the medium strength alloys (2024, 2014, etc.) and approximately four times the depth for the higher strength alloys (7075, 7178, 7079 etc). Where deep and tight joggles are required, annealed material should be used with heat treatment to follow.

3-89. HOT-FORMING. Hot forming is not generally recommended, however, it is sometimes used where it is not possible to form an article by other methods. Accomplishment shall not be attempted unless adequate facilities are available to control temperature requirements. Actual formability will depend on the temperature that various alloys are heated. The higher the temperature the easier formed. Excessively high temperature shall not be used, as considerable loss in strength and corrosion resistance will occur. Frequent checks should be made using an accurate contact pyrometer. Table 3-14 cites the recommended times and temperature (accumulative) for the various alloys. The losses in strength as a result of re-heating at the temperature cited by this table will not exceed 5%. Equal formability will be obtained with shorter periods of heating in most cases and the minimum times should be used. It should be understood that this table cited the maximum accumulative times at cited temperature.

3-90. SPINNING. Spinning is an art and makes exacting demands upon the skill and experience of the mechanic performing the operation. For this reason mass production of parts is impractical. However, it can be used to advantages where only a few parts are required and to assist in the removal of buckles and wrinkles in drawn shell shaped objects.

3-91. Forming by spinning is a fairly simple process, an aluminum disc (circle) is placed in a lathe in conjunction with a form block usually made of hardwood; as the disc and form block are revolved, the disc is molded to the form block by applying pressure with a spinning stick or tool. Aluminum soap, tallow or ordinary soap can be used as a lubricant.

3-92. The best adapted materials for spinning are the softer alloys i.e., 1100, 3003, 5052, 6061, etc. Other alloys can be used where the shape to be spun is not excessively deep or where the spinning is done in stages and intermediate annealing is utilized to remove the effect of strain hardening (work hardening) resulting from the spinning operation. Hot forming is used in some instances when spinning the heavier gauge materials and harder alloys.

3-93. BLANKING AND SHEARING. Accurate shearing will be affected by the thickness of material, type of shear or knife blades, condition of material, adjustment and sharpness of blades, size of cut and the relationship of the width of the cut to sheet thickness.

3-94. Normally most aluminum alloys can be sheared 1/2 inch and less in thickness except for the harder alloys i.e., 7075-T6 and 7178-T6. These alloys have a tendency to crack in the vicinity of the cut especially if the sheer blades are dull or nicked. The above will naturally require that tooling used be designed to handle the thickness of material to be cut. Correct clearance between shear blades is important for good shearing. Too little clearance will quickly dull or otherwise damage the blades or knives; too much will cause the material to be burred, or even to fold between blades. Normal clearance is from one-tenth to one-eighth the sheet thickness. Blade life will be prolonged by occasionally lubricating. When the capacity of shear is doubtful the shear manufacturer should be consulted.

Table 3-14. Maximum Accumulative Reheat Times for Hot Forming Heat Treatable Alloys at Different Temperatures

ALLOY	450°F	425°F	400°F	375°F	350°F	325°F	300°F
2014-T6	To Temp	To Temp	5-15 Min	30-60 Min	2-4 Hrs	8-10 Hrs	20-50 H
2024-T81	5 Min	15 Min	30 Min	1 Hr	2-4 Hrs	- - -	20-40 H
2024-T86	5 Min	15 Min	30 Min	1 Hr	2-4 Hrs	- - -	10-20 H
6061-T6	5 Min	15 Min	30 Min	1-2 Hrs	8-10 Hrs	5-100 Hrs	100-200 H
7075-T6	No	No Temp	5-10 Min	30-60 Min	1-2 Hrs	2-4 Hrs	10-12 H
*2014-T4, 2014-T3	No	No	No	No	No	No	No
*2024-T4, 2024-T3	No	No	No	No	No	No	No
* These materials should not be hot formed unless subsequently artificially aged.							

3-95. BLANKING. Blanking is usually accomplished utilizing a blanking die in almost any type of punch press equipment. The essential factors requiring control are die clearance, shearing edge lead, and stripping action. The shearing principle is primarily the same as that encountered with the squaring shear. However, the method of grinding punch dies will vary according to the results required and in such manner that will reduce load on equipment. Commonly two or more high points are ground on die to keep side thrust on the punch at a minimum. Lubrication is essential in blanking operations. Suitable lubricants are engine oil, kerosene and lard oil which are normally used in mixed form.

Paragraphs 3-96 through 3-155 deleted.
Tables 3-15 through 3-16 deleted.
Pages 3-33 through 3-38 deleted.

3-156. Deleted.

3-157. Deleted.

3-158. Deleted.

3-159. Deleted.

3-160. Deleted.

3-161. Deleted.

3-162. RIVETING. Riveting is the most common method of assembling components fabricated from aluminum. Typical advantages of this method of mechanical fastening are simplicity of application, consistent joint uniformity, easily inspected (X Ray and other type equipment not required.), low cost, and in many cases lighter weight.

3-163. The rivets used in USAF Weapon System structures require that the alloys and shapes be closely controlled by specification/standards, to assure structural integrity and uniformity. These rivets are presently classified as solid shank, hi-shear, blind (structural-non-structural) explosive/chemical expanded. They are available in a variety of shapes, alloys, sizes, lengths and types. The most common alloys utilized are aluminum because the structure alloys are normally aluminum. In addition some of the aluminum rivet characteristics can be changed by heat treating which facilitates application (see paragraph 3-37.)

3-164. All of the aluminum alloys could be used to manufacture rivets; however, due to some alloys having superior properties they have been selected as standard. See Table 3-17 for alloys head, identification, MS/AN standard cross references, etc., for general rivets used on AF weapons systems.

3-165. Rivets in aluminum alloys 1100(A), 5056(B), 2117(AD) are used in the condition received Alloys 2017(D) and 2024(DD) often referred to as "Ice Box Rivets" require heat treatment prior to use (see paragraph 3-43). Rivets in alloy 2017 and 2024 should be driven immediately after quenching with a maximum delay of 20 minutes or refrigerated to delay aging. The customary procedure (unless only a few rivets are involved) is to place the rivets under refrigeration immediately after heat treatment The time the rivets may be used will depend on refrigeration equipment available. Cooling to 32°F will retard natural aging to the extent that the rivets may be driven up to 24 hours. Cooling rivets +0-10°F and below will retard natural aging to the extent that the rivets may be retained for use indefinitely.

3-166. Rivets utilized with extended driving time should be closely inspected after upsetting for cracks. If inspection reveals that rivets are cracked, discontinue use, remove defective rivets and obtain reheat treated rivets prior to continuing the assembly operation.

3-167. If for some reason it is necessary to determine if a rivet has been heat treated this may be done by Rockwell Hardness testing. Test by supporting rivets in a vee block and hardness reading taken with a 1/16 inch ball 60 kilogram load . A hardness of over 75 will indicate a heat treated rivet.

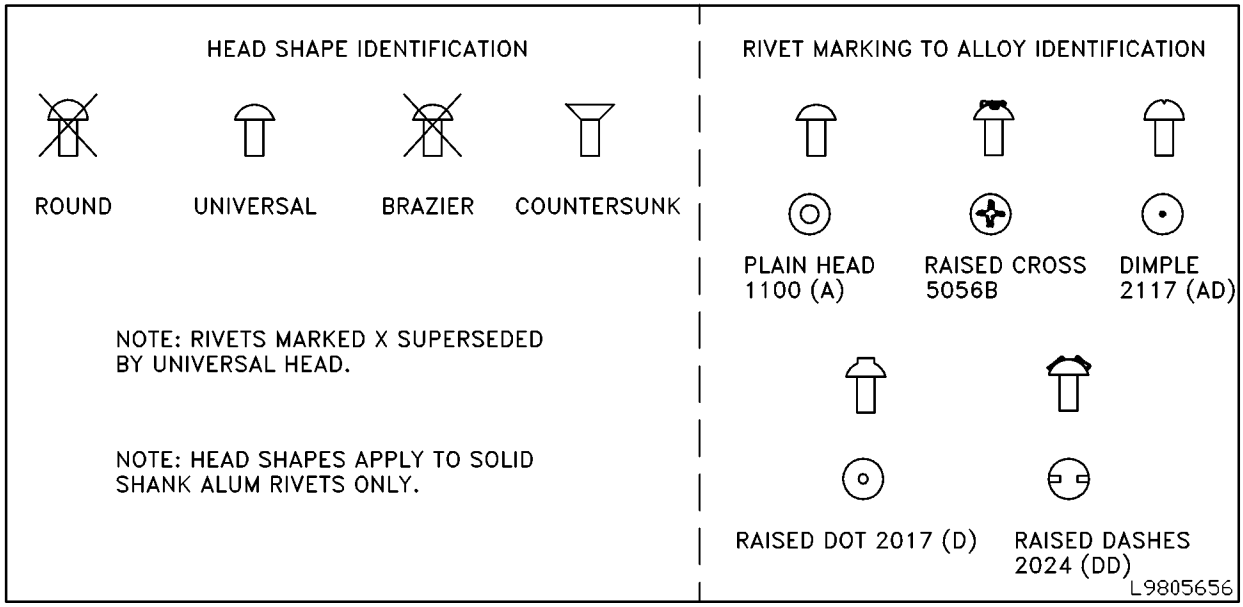

CAUTION

Heat treatment and most other operations requiring use of heat will be accomplished prior to installing rivets, since heating after rivets are installed will cause warping and possible corrosion if salt bath is used. The salt from the bath will contaminate cracks and crevices of the assembly and complete removal can not be assured.

3-168. Shear strength (ultimate) of a driven rivet can be determined by the formula Ps=SsAN. Ps=ultimate shear strength (pounds), Ss=specified shear strength of the driven rivet (psi), A=cross sectional (area of the driven rivet, normally equal to hole cross section (square inch) and N=number of shear planes. For shear strength of protruding and flush head rivets see Table 3-19.

3-169. The load required to cause tensile failure of a plate in a rivet joint can be determined by the formula Ts=P+ (D-A) Tp. Ts=ultimate tensile strength (pounds), PT = specified ultimate tensile strength of the plate (psi), D=pitch of the rivets (inch) - pitch is the distance between the center of two adjacent rivets on the same gauge line, A=diameter of hole (inch) and Tp=thickness of plate.

3-170. Rivet Selection. Unless otherwise specified rivets should be selected that have comparable strength and alloy as material being assembled. This is an important factor in preventing corrosion from dissimilar metal contact and to assure structurely sound assemblies. The following tables are provided as a general guide for selection of rivet alloy vs assembly alloy.

3-171. The formula Ps = Sb AC can be used to determine failure in bearing strength. Ps = ultimate bearing strength of the joints (lbs), Sb = specified ultimate bearing strength of the plate (psi) and AC = projected crushing area (bearing area) of rivet, or diameter (sq in) see table 3-20 for typical bearing properties of aluminum alloy plates and shapes.

3-172. Rivet hole preparation is one of the key factors in controlling successful upsetting of rivet head, material separation and buckling which weakens the structural strength of the rivet joint, and corrosion attack of rivets and material after equipment is placed in service/use. The rivet hole should be drilled, punched/reamed to size that allows the minimum clearance (apprximately 0.003 for thin sheet and up to about 0.020 for 0.750 - 1.000 inch thick material) required to insert rivet without forcing. Theoretical rivets holes should be completed i.e., drilled, reamed to size, deburred, chips removed that may lodge or be trapped in between surface of metal and treated (anodized etc.) before starting to rivet assembly. The above cannot always be accomplished especially where the assembly is large and requires the application of a large amount of rivets due to hole tolerance and variations in holding clamping/pressures. To overcome these problems requires that holes be pilot drilled end reamed to size at time rivet is to be installed. This method has a twofold purpose: (1) allows easy insertion of rivets, (2) prevents

elongation of rivet holes and resulting weakening of rivet joint.

3-173. Rivet holes drilled/reamed after assembly is started should be treated by coating with zinc chromate primer or other approved material. Two methods for coating rivets and improving protection of hole surfaces from corrosion are:

Table 3-17. General Rivet (Alum) Identification Chart

OLD AN/ STD	SUPERSEDING MS STD	FORM	MATER-IAL	HEAD AND NUMERICAL IDENT CODE	CONDITION	HEAT TREAT
AN456	MS20470	Brazier Head Solid Modified	See AN470			
USAF460	See MS20601	1000 Flush Head Blind Type II Class 2	See MS20601			
USAF461	See MS20600	Protruding Head Type II Class I Blind	See MS20601			
USAF463	See MS20600	Same	Same			
NAF1195	See MS20600	Same	Same			
AN470	MS20470	Universal Head Solid	1100	A-Plain	F	No
			5056	B-Raised Cross	F	No
			2117	AD-Dimple	T-4	No
			2017	D-Raised Dot	T-4	Yes
			2024	DD-Raised Dash	T-4	Yes
	MS20600	Protruding Head-Blind Type II, Class I	5056	B	F	No
			2117	AD	T-4	No
			Monel	M		No
	MS20601	100° Flash Head Blind Type II, Class 2	5056	B	F	No
			2117	AD	T-4	No
			Monel	M		No
	MS20602	Protruding Head Blind Chemically Expanded Type I, Class I, Styles A & B	5056	B	F	No
			2017	D	T-4	No

Table 3-17. General Rivet (Alum) Identification Chart - Continued

OLD AN/ STD	SUPERSEDING MS STD	FORM	MATER-IAL	HEAD AND NUMERICAL IDENT CODE	CONDITION	HEAT TREAT
	MS20604	Universal Head Blind Class I Non Struct	5056	B	F	No
			2117	AD	T-4	No
			Monel M or MP (MP = Monel Plated)			No
	MS20605	100° Flash Head Blind Class 2, Non Struct	5056	B	F	No
			2117	AD	T-4	No
			Monel M or MP (MP = Monel Plated)			No
	MS20606	Modified Trusshead Blind Class 3 Non-Struct	5056	B	F	No
			2117	AD	T-4	No
			Monel M or MP (MP = Monel Plated)			No
	MS20613	Universal Head Solid	1010	Recessed Triangle Annealed		No
			302	C-None	Annealed	No
	MS20615	Universal Head Solid	Copper	CW Annealed		No
			Monel	Raised Dots	Class A	No

NOTE: Copper, steel, and monel listed for information purposes only. For special rivets see manufacturing drawing, data, specification, etc. For other information on rivets see T.O. 1-1A-8/1-1A-1.

Table 3-17. General Rivet (Alum) Identification Chart - Continued

OLD AN/ STD	SUPERSEDING MS STD	FORM	MATER-IAL	HEAD AND NUMERICAL IDENT CODE	CONDITION	HEAT TREAT
AN426	MS20426	Countersunk 100°	1100	A-Plain	F	No
			5056	B-Raised Cross	F	No
			2117	AD-Dimple	T-4	No
			2017	D-Raised Dot	T-4	Yes
			2024	DD-Raised Dashes	T-4	Yes
NOTE: See paragraph 3-44 for heat treat data.						
AN427	MS20427	Countersunk 100°	1006/ 1010	Recessed Triangle	A	No
			Copper 302/304	C-None F-Recessed	A A	No No
			Monel M	Dash M-None		
AN430	MS20470	Round Head replaced by universal See AN470 + M520470				
AN435	MS20435	Round Head Solid	1006	Head Ident Recessed Triangle	A	No
NOTE: Listed for Reference only.			Copper 302/304	C-None F-Head Ident None	A A	No No
			Monel	M-None		
AN441	Use MS20435	See AN435				
AN442	Use MS20470	See AN70+ MS20470				
AN450	MS20450	Countersunk & oval tubular	1006/ 1010/ 1015	Blank/ None	A	No
Note: Listed for Reference only.			Copper	C-None	A	No
			2117	AD-None	T-4	No
			Brass	B-None	Grade B	No
			MONEL	M-None	A	No
AN455	MS20470	Brazier Head Solid Superse-ded by Univer-sal.	See AN470			

Table 3-18. General Aluminum Rivet Selection Chart (Rivet Alloy vs Assembly Alloy)

Rivet Alloy	Assembly Alloy
1100	1100, 3003, 3004, 5052
2117-T4 (AD)	3003 - H16 and H-18, 5052 - H16 and H18, 2014, 2017, 2024, 6061, 7075, and 7178
2017-T4 (D), 2024T4 (DD)	2014, 2017, 2024, 5052, 6061, 7075 and 7178
5056-H32 (B)	5052 and magnesium alloys, AZ31B, etc.

a. Spraying holes with primer after drilling and immediately preceding installation of rivet.

b. Dipping rivet in zinc chromate primer and installing while still wet.

3-174. For additional information on rivets (strengths, factors, etc.) see MIL-HDBK-5, T.O.'s 1-1A-8 and 1-1A-1.

3-175. MACHINING. The resistance encountered in cutting alminum alloys is low in comparison to other metals. In fact most of the aluminum alloys will machine approximately 10 times faster than steel. This factor combined with other properties, i.e., strength, heat treatability, weight, corrosion resistance, etc. makes aluminum a preferred material in many instances for fabrication of parts by machining. Brass (free machining) is the only other material with comparable machining properties.

3-176. Personnel accomplishing the work should be properly trained in machining aluminum as with other types of metals. Due to various circumstances personnel familiar with machining steel products are required to machine aluminum without proper training/information on speeds, feeds, tools etc., required to effectively accomplish a specific task. The purpose of this section is to provide a general guide for selection of tools, machining, speeds, etc.

3-177. The tools used for machining aluminum will normally require more rake side-top and operation at higher/feeds than used for steel. The amount of rake required will depend on composition, physical form (cast or wrought) and temper. The more ductile or softer the alloy the more rake required. The following general practices are recommended for shafing, grinding and maintaining tools for cutting aluminum:

a. Allow more space for chips to be formed and expelled from tool than allowed for steel.

b. Design tools (grind tool) so that chips and cuttings are expelled away from the work piece.

c. Keep cutting edges of tools sharp, smooth, free of burrs, wire edges and scratches.

d. Use high machining speeds, moderate feeds and depths of cut.

e. Apply lubricant/coolant in large quantities to tool when cutting.

3-178. The higher speeds utilized for machining aluminum requires:

a. Machines be free of vibration and lost motion.

b. Rigid support of tool near cutting edge to minimize clatter and vibration.

c. Secure clamping of work to machine to avoid distortion or slippage.

d. Use of proper lubricant, cutting compound or coolants to prevent overheating, warpage/distortion and to provide adequate lubrication to cutting tool.

3-179. CUTTING TOOLS FOR MACHINING ALUMINUM. There are four general types of tool steel material that can be used to machine aluminum. They should be selected in accordance with availability and scope of job to be accomplished. The following is a suggested guide for selection of tools:

a. High carbon tool steel is adequate for machining a small number of parts or where cutting speed required is relatively low. This material will exceed the performance of some of the other types of tools when used for fragile tools such as drills, taps, etc., because it does not break as easily as the other types. Stock material is

obtainable in accordance with Federal Specification QQ-T-580 where required for local fabrication of high carbon tools etc.

b. High speed tool steel is the most common type used for machining except on the higher silicon alloys.

(1) Availability, reasonable cost.

(2) Heat resistance (will retain cutting edge up to about 950°F dull red).

(3) Permits use of large rake angle required. Federal Specification QQ-T-590 applies to stock material. All the various classes (T1, T2, T3, etc.) may be used for machining aluminum. Class T1 (18-4-1) general purpose type is the most widely used.

c. Where long production runs are involved cemented carbide (solid or tipped) tools give better service. The carbide tools have been known to last thirty times longer than high speed tool steel. The carbide tools are also recommended for cutting high silicon content alloys. Because of the brittleness of the cemented carbide tool the cutting angle should be greater than those recommended for high carbon/high speed steels.

d. Diamond tipped tools should only be used for light finishing cute or special finishing operations. Normal cutting of 75° - 90° are used with top rake angles of 6° - 10°. Tool projection (or set) should be slightly above center line (CL) of the work.

3-180. TURNING. To properly perform the turning operation firmly attach the work to the machine (lathe) chuck, collet or faceplate. The work should be held in the best manner to minimize distortion from chuck or centrifugal force action during the turning operation. Long rods/stock should be supported by ball or roller bearing tailstock centers which are more satisfactory than solid or fixed centers in resisting thrusts from centrifugal force and thermal expansion. Soft liners may be used between work and machine jaw faces to prevent jaw teeth from damaging/marring work piece. When it is necessary that work be held by clamping from inside diameter outward the tightness of jaws should be checked frequently to be sure that work is not being released as a result of thermal expansion.

3-181. The recommended cutting fluids are the soluble oil emulsion which combine the functions of cooling and lubricating for general purpose use. For heavy cutting especially when speeds are low, lard oil such as Specification C-O-376 or mineral oil, Specification VV-O-241 is recommended. In practice it will be found that some machining operations can be performed dry.

3-182. Tables 3-22 and 3-23 cite suggested turning speeds, tool angles and feeds. Tool projection in relation to work should be set at or slightly above work piece center line. Sturdy construction of tools and holders is essential to minimize vibration/chatter at the high speeds aluminum alloys are machined.

NOTE

Parting tools should have less top rake than turning tools. Recommend top rake angles of 12° - 20° and front clearances of 4° - 8° grind face concave (slightly) and so that corner adjacent to work will lead opposite corner by 4° - 12° or as required for best results.

3-183. MILLING - ALUMINUM. Milling of aluminum alloys should be accomplished at high cutter speeds. The limitations will usually depend on the machine and type cutters used. The reason for the higher cutter speeds is that at low speeds the cutters will have a tendency to load and gum. This will normally clear as the speed is increased.

3-184. The tooling for milling should be selected according to the operation and duration/size of job to be performed. The cutters should have fewer teeth and should be ground with more top and side rake than those used for milling steels. Most operations can be accomplished with spiral cutters. Nick tooth cutters are used when reduction in size of chips is required. Solid-tooth cutters with large helix angles are used where free-cutting tools are required. When cutters with large helix angles are used it is often necessary that two interlocking cutters of opposite helixes be employed to alleviate axial thrust.

3-185. Tool alloys should be selected for milling aluminum as follows:

a. For short runs high carbon steel is normally satisfactory.

b. For production runs of extended duration high speed steel is recommended.

c. Where climb milling/high speeds are utilized, carbide tipped tools are recommended for extended runs.

Table 3-19. Shear Strength of Protruding and Flush Head Aluminum Alloy Rivets, Inch Pounds

Size of Rivet(In Dia)	1/16	3/32	1/8	5/32	3/16	1/4	5/16	3/8
Alloy + driven temper 5056 FSU = 28 KSI	99	203	363	556	802	1,450	2,290	3,280
2117-T321, FSU = 30 KSI	106	217	388	596	862	1,550	2,460	3,510
2017-T31, FSU = 34 KSI	120	297	442	675	977	1,760	2,970	3,970
2017-T3, FSU = 38 KSI	135	275	494	755	1,090	1,970	3,110	4,450
2024-T31, FSU = 41 KSI	145	296	531	815	1,180	2,120	3,360	4,800

FSU = Average Shear Strength of alloy in specified temper.

KSI = 1000 lbs square inch example: 34 KSI = 34,000 lbs per square inch.

Single shear rivet strength correction factor (resulting from use in thin plates and shapes).

Sheet thickness (in)								
0.016	0.0964							
0.018	0.0984							
0.020	0.0996							
0.025	1.000	0.972						
0.032		1.000	0.964					
0.036			0.980					
0.040			0.996	0.964				
0.045			1.000	0.980				
0.050				0.996	0.972			
0.063				1.000	1.000	0.964		
0.071						0.980	0.964	
0.080						0.996	0.974	
0.090						1.000	0.984	
0.100							0.996	0.972
0.125							1.000	1.000
0.160								
0.190								
0.250								

Double shear rivet strength correction factor (resulting from use in thin plates and shapes)

	SIZE OF RIVETS							
Sheet Thick Inch	1/16	3/32	1/8	5/32	3/16	1/4	5/16	3/8
0.016	0.688							
0.018	0.753							
0.020	0.792							

Table 3-19. Shear Strength of Protruding and Flush Head Aluminum Alloy Rivets, Inch Pounds - Continued

0.025	0.870	0.714						
0.032	0.935	0.818	0.688					
0.036	0.974	0.857	0.740					
0.040	0.987	0.896	0.792	0.688				
0.045	1.000	0.922	0.831	0.740				
0.050		0.961	0.870	0.792	0.714			
0.063		1.000	0.935	0.883	0.818	0.688		
0.071			0.974	0.919	0.857	0.740		
0.080			1.000	0.948	0.896	0.792	0.688	
0.090				0.974	0.922	0.831	0.753	
0.100				1.000	0.961	0.870	0.792	0.714
0.125					1.000	0.935	0.883	0.818
0.160						0.987	0.835	0.883
0.190						1.000	0.974	0.935
0.250							1.000	1.000

Note: Values (lbs) of shear strength should be multiplied by the correction factor whenever the D/T = rivet diameter/plates sheet or shape thickness ratio is large enough to require correction. Example: Rivet diameter 1/8 (alloy 2117 - T3) installed in 0.040 sheet, shear factor is 388 lbs correction factor 0.996 =

```
  388
0.996
   2328
  3492
3492
386.448 corrected shear pounds
```

Table 3-20. Bearing Properties, Typical, of Aluminum Alloy Plates and Shapes

Edge Distance = 1.5 X Rivet Diameter			Edge Distance = 2.0X X Rivet Diameter	
Alloy	Yield Strength	Ultimate Strength	Yield Strength	Ultimate Strength
1100 - 0	10,000	21,000	12,000	27,000
1100 - H12	18,000	23,000	21,000	29,000
1100 - H14	22,000	24,000	23,000	31,000
1100 - H16	23,000	16,000	26,000	34,000
1100 - H18	27,000	19,000	32,000	38,000
3003 - 0	12,000	22,000	15,000	34,000
3003 - H12	21,000	27,000	24,000	36,000
3003 - H16	28,000	34,000	33,000	42,000
3003 - H18	32,000	38,000	38,000	46,000

Table 3-20. Bearing Properties, Typical, of Aluminum Alloy Plates and Shapes - Continued

Edge Distance = 1.5 X Rivet Diameter			Edge Distance = 2.0X X Rivet Diameter	
Alloy	Yield Strength	Ultimate Strength	Yield Strength	Ultimate Strength
2014 - T4	56,000	93,000	64,000	118,000
2014 - T6	84,000	105,000	96,000	133,000
2024 - T3	64,000	102,000	74,000	129,000
Alclad 2024-T-3	60,000	96,000	69,000	122,000
2024 - T36	80,000	110,000	91,000	139,000
Alclad 2024-T36	74,000	100,000	85,000	127,000
5052 - 0	25,000	46,000	30,000	61,000
5052 - H32	37,000	54,000	42,000	71,000
5052 - H34	41,000	59,000	47,000	78,000
5052 - H36	47,000	62,000	54,000	82,000
5052 - H38	50,000	66,000	58,000	86,000
6061 - T4	29,000	56,000	34,000	73,000
6061 - T6	56,000	72,000	64,000	94,000
7075 - T6	101,000	123,000	115,000	156,000
Alclad 7075-T6	94,000	114,000	107,000	144,000

3-186. Milling cutters should be inclined to work and beveled on leading corner (least bevel for finish cuts) to minimize clatter.

3-187. The cutting fluids for milling aluminum should combine cooling and lubrication properties. Coolant lubrication should be applied under pressure (atomized spray if available) in large quantities to tool and work. The recommended cutting fluids are water base cutting fluids such as soluble oils and emulsions, mixed 1 part to 15 for high speeds and 1 part to 30 for low speed cutting.

3-188. Tables 3-24 and 3-25 cite suggested speeds, contour and tool angles, for milling aluminum. The best combination of cutting speeds, feed and cut for a given job will depend on design of tool/cutter, kind of tool material, condition of machine, machine power, size, clamping method and type material being worked.

3-189. SHAPING AND PLANING. The speed at which aluminum alloys can be cut by planing and shaping is somewhat slower in comparison to other machining methods, due to equipment design and limitations. The slower cutting speeds can be overcome to some extent by securely anchoring the work to the machine and using heavy rough cutting feeds. The tools used for rough cut should be (round nose) of heavy construction and properly ground to operate efficiently. Rough cut tools should be ground with moderate amount of rake to provide maximum cutting edge support. Finish tool should have more top rake and an extra large amount of side rake. Finishing tool shall be used with fine feeds only due to the additional side and top rake (finish cut should not exceed 0.018 inch).

3-190. Most cutting operations by shaping and planning can be accomplished without cutting fluids, however fine finishing can be improved by lubrication. Recommended cutting compounds are kerosene, mixture of 50-50 lard-oil and soluble oil.

3-191. Tables 3-26 and 3-27 cite suggested turning speeds, tool angles and feeds. Secure clamping of work is re-emphasized especially when heavy cutting feeds are to be used.

Table 3-21. Standard Rivet Hole Sizes with Corresponding Shear and Bearing Areas for Cold Driven Aluminum Alloy Rivets

Rivet Size, In.		1/16	3/32	1/8	5/32	3/16	1/4	5/16	3/8
Drill Size, No.		51	41	30	21	11	F	P	W
Nom hole dia, In.		0.067	0.096	0.1285	0.159	0.191	0.257	0.323	0.386
Single Shear area sq in.				0.01296	0.01986	0.02865	0.05187	0.08194	0.1170
Bearing Area Sq. in for various Shear Sheet and Plate Thicknesses	0.032			0.00411	0.00509				
	0.040			0.00514	0.00636	0.00764			
	0.051	Not Normally used for Structural Application	Not Normally used for Structural Application	0.00655	0.00811	0.00974	0.01311		
	0.064			0.00822	0.0108	0.01222	0.01645	0.0207	
	0.081			0.01041	0.01288	0.01547	0.02082	0.262	0.0313
	0.102			0.01311	0.01622	0.01948	0.02621	0.0369	0.0394
	0.125			0.01606	0.01988	0.02388	0.03213	0.0404	0.0483
	0.156			0.02480	0.02980	0.04016	0.0505	0.0603	
	0.187				0.3581	0.04819	0.0606	0.0724	
	0.2187				0.04178	0.05622	0.0707	0.0844	
	0.250					0.06425	0.0808	0.0965	
	0.3125						0.1009	0.1206	
	0.3750							0.1448	
	0.500								

L9900050

3-192. DRILLING ALUMINUM ALLOY. Standard type twist drills may be used satisfactorily for many drilling operations in aluminum alloys. However, better results can be obtained with improved designed drills where soft material and drilling of thick material or deep holes are involved. These drills are usually designed having more spiral twists per inch (see figure 3-2). The additional spiral twist gives more worm action or force to drill causing the drill to cut/feed faster and is helpful in removing chips, especially in deep hole drilling operations.

3-193. Generally a drill for a given job should be selected according to the thickness, type alloy and machine/drill motor to be utilized. The following is a general guide for the selection of drills and recommended speeds:

a. Drill press.

Point Angle: 118° - 140° for general work and 90° - 120° for high silicon.
Spiral Angle: 24° - 28° for thin stock and medium depth holes up to 6 times drill diameters, 24° - 48° for deep holes over 6 times drill diameter.

Table 3-22. Turning Speeds and Feeds

ALLOY TYPE AND TEMPER	CUT INCHES	CUTTING SPEED FPM	FEED, IN./REV	OPER	TOOL MATERIAL
Soft Series, 1100 All temp	0.250 Maximum	700 - 1600	0.050 Maximum	Rough	Plain high carbon/high speed
5052-H12, H14	0.040 Maximum	1500 - 3500	0.004 - 0.015	Finish	Plain high carbon/high speed
2011-2024-0	0.250 Maximum	4000 - 7000	0.012 Maximum	Rough	Carbide
5056-0-6061-0	0.020 Maximum	6000 - 8000	0.010 Maximum	Finish	Carbide
7075-0, 113	0.010 Maximum	At Minimum vibration	0.002 - 0.005	Finish only Diamond	
138, 214, 212 750, 220, 122					
HARD SERIES	0.200 Maximum	400 - 650	0.007 - 0.020	Rough	Plain high carbon/high speed
108, 319, 43	0.020 Maximum	600 Maximum	0.002 - 0.004	Finish	Plain high carbon/high speed
5052-H34, H36, H38	0.200 Maximum	500 - 1300	0.010 Maximum	Rough	Carbide
T4, 2024-T3	0.020 Maximum	700 - 2500	0.010 Maximum	Finish	Carbide
7075-T6, 7178-T6	Not recom-mended			Rough	Diamond tipped
6061-T4, T6, etc.	0.006 Maximum	At minimum vibration	0.002 - 0.004	Finish	Diamond tipped
HIGH SILICON SERIES	0.120 Maximum	600 Maximum	0.007 - 0.020	Rough	Plain high carbon/high speed
	0.020	600 Maximum	0.002 - 0.004	Finish	Plain high carbon/high speed
4032, 333,	0.120 Maximum	500 - 1000	0.008 Maximum	Rough	Carbide
A132, 132, 356	0.020 Maximum	500 - 1500	0.004 Maximum	Finish	Carbide

Table 3-22. Turning Speeds and Feeds - Continued

ALLOY TYPE AND TEMPER	CUT INCHES	CUTTING SPEED FPM	FEED, IN./REV	OPER	TOOL MATERIAL
etc		NOT RECOM-MENDED		Rough	Diamond tipped
	0.006	At minimum vibration	0.001 - 0.003	Finish	Diamond tipped

Table 3-23. Tool Angles - Turning

TOOL ANGLES	PLAIN HIGH CARBON/HIGH SPEED	CARBIDE	DIAMOND
Cutting Angles	30° - 50°	52° - 80°	74° - 88°
Top Rake	30° - 53°	0°- 32°	10° - 0°
Side Rake	10° - 20°	5° - 10°	0° - 6°
Front Clear	7° - 10°	6° - 10°	Nose Radii 0.06 - 0.10
Side Clear	7° - 10°	6° - 10°	---

Table 3-24. Milling - Speeds and Feeds

ALLOY	CUT	CUTTER SPEED	FEED		OPER	TOOL MATERIAL
Temper	Inches	Ft/minutes	Ft/minutes	Inches per tooth		
Soft	0.250 Maximum	700 - 2000	10 Maximum	0.005 - 0.025	Rough	High carbon/ High Speed
Soft	0.020 Maximum	5000 Maximum	10 Maximum	0.005 - 0.025	Finish	″ ″
Hard	0.200 Maximum	500 - 1500	10 Maximum	0.005 - 0-025	Rough	″ ″
Hard	0.020 Maximum	4000 Maximum	10 Maximum	0.005 - 0.025	Finish	″ ″
Soft	0.300 Maximum	3000 - 15000	20 Maximum	0.004 - 0.020	Rough	Carbide Tipped
Soft	0.020 Maximum	3000 - 15000	20 Maximum	0.004 - 0.020	Finish	″ ″

Table 3-24. Milling - Speeds and Feeds - Continued

ALLOY	CUT	CUTTER SPEED	FEED		OPER	TOOL MATERIAL
Hard	0.250 Maximum	3000 - 15000	20 Maximum	0.004 - 0.020	Rough	Carbide Tipped
Hard	0.020 Maximum	4000 - 15000	20 Maximum	0.004 - 0.020	Finish	″ ″

Lip Clearance (lip relief): 17° for soft alloys 15° for medium and hard alloys, 12° for silicone alloys
Speed: 600 ft/min, with high speed drills and up to 2000 ft/min with carbide tipped drills.
Feed: 0.004 - 0.012 inch per revolution for drills 3/8 inch diameter, 0.006 - 0.020 in/rev for 3/8 - 1 1/4 inch diameter and 0.016 to 0.035 in/rev for drills over 1 1/4 inch diameter. When using carbide tipped drill, feed should be slightly less. Feed also may be determined by the formular feeds = square root of drill diameter (inches) divided by 60 feet = Drill diameter (IN) + 0.002.

b. Lathe/screw-machine.

Point Angle: 118° - 140°
Spiral Angle: 0° - 28°
Lip Clearance (lip relief): 15° - 20°
Speed ft/min up to 1500
Feed inches/revolution 0.004-0.016.

c. Portable Drills Electric/Air Driven. Due to variables involved no set factors can be given. However, factors given for drill press should be used as a guide. Feed should be adjusted in accordance with speed of motor to prevent tip heating and also to satisfy operation/operator.

WARNING

When operating any machinery all safety precautions must be observed, i.e., safety goggles shall be worn when grinding/ drilling. Machinery shall be inspected to insure that safety guards are in place/ for safe operation etc. prior to operating. Work shall be securely clamped to prevent slippage. Consult safety officer when in doubt about the safety of an operation.

3-194. The drilling of thin material normally does not require coolant/lubrication however adequate lubrication is essential to drill life and hole quality when drilling holes of 1/4 inch depth or more. Soluble oil emulsions and lard oil mixtures are satisfactory for general drilling. The lubrication should be applied by forced feed spray/flow where possible and the drill should be withdrawn at intervals to be sure lubricant flows to the drill tip (fill holes completely) when drill is withdrawn.

Table 3-25. Tool Angles - Milling

TOOL ANGLES	HIGH CARBON/HIGH SPEED	CARBIDE
Cutting Angle	48° - 67°	68° - 97°
Top Rake	20° - 35°	10° - 15°
Clearance	3° - 7° Primary	3° - 7° Primary
	7° - 12° Secondary	7° - 12° Secondary
Helix	10° - 50°	10° - 20°
Tooth Spacing	Course - Sufficient for chip Clearance.	Approximately 1 tooth per inch of diameter.

Table 3-26. Shaping and Planing-Speeds and Feeds

METHOD	CUT INCHES	CUTTING SPEED	FEED (INCHES)	OPER	TOOL MATERIAL
Shaping	1/4 Maximum	Maximum speed of RAM	0.008 - 0.031	Rough	High Carbon/ High Speed
Shaping	0.005 - 0.014	Maximum speed of RAM	0.094 - 0.156	Finish	High Carbon/ High Speed
Planing	3/8 Maximum	Maximum speed of Table	0.020 - 0.100	Rough	High Carbon/ High Speed
Planing	0.005 - 0.018	Maximum speed of Table	0.050 - 0.375	Finish	High Carbon/ High Speed

Table 3-27. Shaping Tool Angles

	OPERATION ROUGH FINISH	TOOL MATERIAL
		HIGH CARBON/HIGH SPEED
Top rake	19° - 10° 43° - 52°	HIGH CARBON/HIGH SPEED
Bottom Clear	7° - 9° 8° - 10°	HIGH CARBON/HIGH SPEED
Side Rake	30° - 40° 50° - 60°	HIGH CARBON/HIGH SPEED
Side Clear	7° - 9° 0° - 0°	HIGH CARBON/HIGH SPEED
Cutting Angle	64° - 71° 30° - 37°	HIGH CARBON/HIGH SPEED

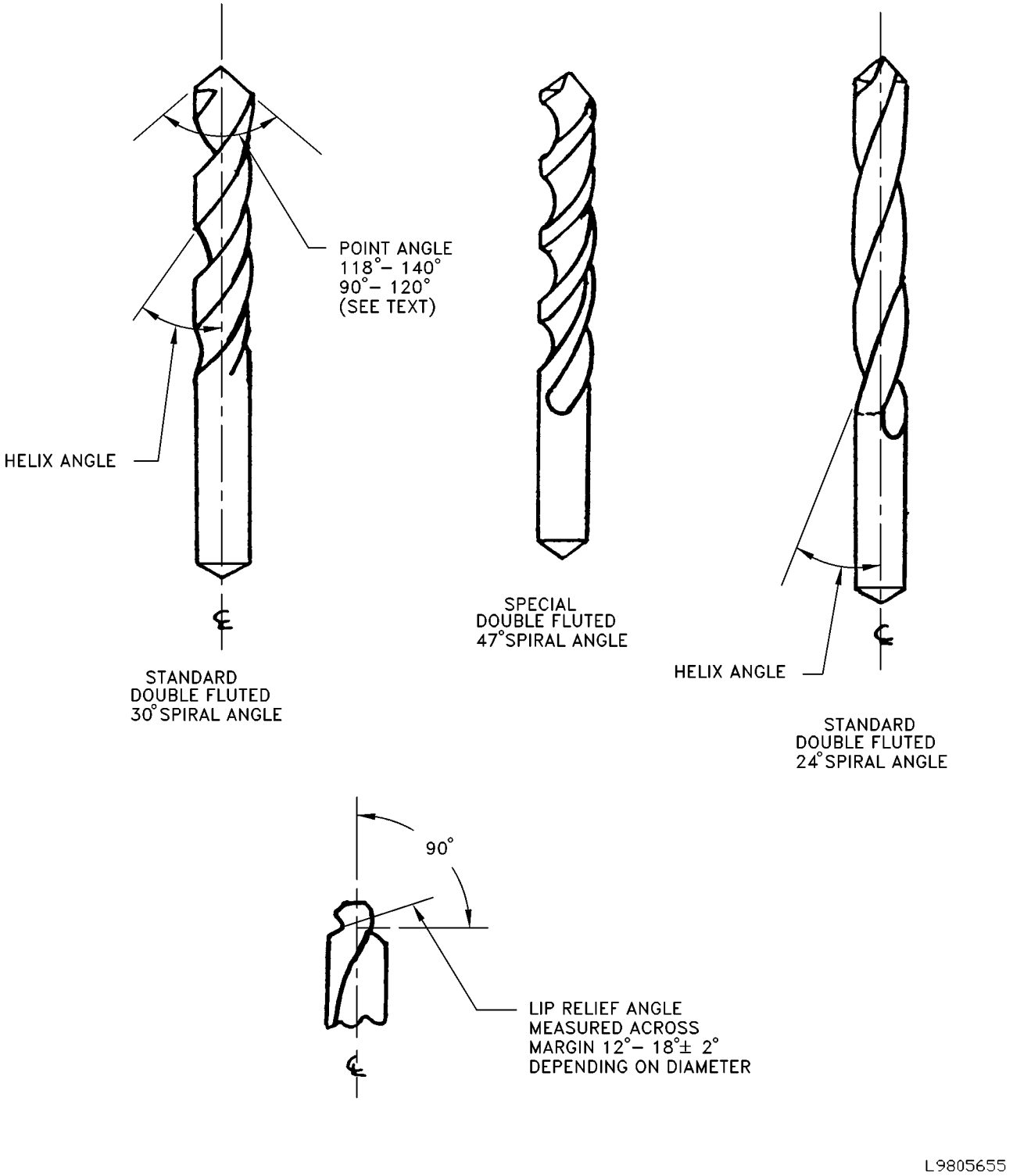

Figure 3-2. Drill Designs and Recommended Cutting Angles

Table 3-28. Thread Constant for Various Standard Thread Forms

	PERCENT OF FULL THREAD DESIRED			
THREAD FORM	75%	80%	85%	90%
American Std Course Series C =	0.9743	1.0392	1.1042	1.1691
Whitworth C =	0.9605	1.0245	1.0886	1.1526
British Ass'n Std C =	0.9000	0.9600	1.0200	1.0800
Amer Std 60° Stub C =	0.6525	0.6960	0.7395	0.7830
Amer Std Sq C =	0.7500	0.8000	0.8500	0.9000
Amer Std 10° modified Sq Sq C =	0.7500	0.8000	0.8500	0.9000

3-195. TAPPING. The taps used for threading aluminum alloys should be of the spiral fluted type for best results. Straight fluted tape can be used but have a tendency to clog and tear the threads during the tapping operation. Spiral fluted taps for cutting right-handed threads should have a right-hand spiral of about 40° angle with a generous back off taper and highly polished flutes.

3-196. Spiral - Pointed or "Gun Taps" (straight fluted except they have a short spiral on the starting end) cut aluminum more freely than the other types. With this type tap the major portion of cutting occurs at the spiral end and curls ahead of the tap. The use of the "Gun Tap" is therefore limited to tapping holes which have room for the cuttings ahead of the tool. This spiral pointed tap should not be used for cutting tapered thread or for bottoming taps.

3-197. The following procedures and tools are recommended for tapping aluminum alloys:

a. Cutting Speed: 40 to 130 feet/minute use lower speed for hard alloys and higher speed for soft alloys.

b. Tap Type Selection: For blind holes and bottoming use spiral fluted; for semi-blind use spiral pointed (gun taps); and for hole through work use spiral pointed (gun taps).

c. Thread Type: Rounded or flattened (turn coated) thread contour for general use.

d. Tool Angles: Spiral flute-grind a lead spiral extending one full thread beyond chamfer on straight fluted tap. To make gun tap and spiral flute tap should be 28° to 40°; cutting angel 40° to 45°; top rake 45° to 50°; back rake 4 - 8°; cutter area (included angles); 2 flute 36° to 72° and 3 flutes 24°to 48°.

e. Tapping Allowance: Drill diameter for general tapping should be from 0.005 to 0.006 inches per inch larger than standard for the same thread in steel or in accordance with the following.

$$\text{Drill Diameter} = (1.005 \times \text{tap diameter}) - \frac{C}{\text{thread per inch}}$$

C = Thread constant for various thread forms and percentages of thread depth required as given in Table 3-28.

f. Lubrication: For high speed tapping use lard oil/mineral oil and for hand tapping a more viscous lubricant is recommended such as heavy grease/oil, white lead, etc.

3-198. FILING.

3-199. Hand files of the single cut type having milled teeth usually give the best results for filing aluminum. The main consideration in file design/selection for aluminum is to provide ample chip space clearance. The cuttings generated are large and have a tendency to powder, pack and clog between file teeth. To overcome clogging problem chip space is increased, grooves are cut deeper and teeth are cut with generous side and top rake.

3-200. For finish filing a long angle mill file (single) (cut) with tooth spacing of 14-24 teeth per inch with side rake angle of 45° to 55° is recommended. In absence of the preferred file the same effect can be obtained using standard mill cut files by adjusting angle of filing incidence to the metal worked. The file is often adjusted until force or motion applied is parallel to the work piece for best results. A good general purpose file is the curved tooth type (often called "vixen") having about ten deeply cut teeth per inch. It can be used for heavy and finish cuts. Lightly double cut files having tooth spacing of 14 - 20 per inch can be used for light duty rough cutting and finishing when working the harder alloys. User should be

careful not to drag file across work on back stroke as with any filling operation. Files shall be kept clean and free of rust. Clogged files can be cleaned by wire brushing. The use of chalk or talc on file will help prevent clogging.

3-201. Machine filing using rotary files (miniature milling cutters having spiralled sharp teeth with smooth deeply cut flutes) are operated at high speed. The rotary files are operated up to 10,000 RPM for small diameter and to 2,000 maximum peripheral feet/min for the larger diameter. The teeth should be coarse (about 14 teeth per inch) with deep polished flute and spiral notched design.

CAUTION

Wear goggles or face shield when filing with rotary files to protect eyes.

3-202. REAMING. Generally most of the different type reamers may be used for aluminum, but for best results the spiral fluted reamers are recommended - solid, expansion or adjustable. The spiral should be opposite to the rotation to prevent reamer from feeding and hogging into the hole. Holes to be finished by reaming should be drilled sufficiently under-size to assure positive cutting rather than scraping and swedging (indication of oversize drilled holes and improper feed is the projection of a lip around hole diameter after the reaming operation is accomplished). Finish reamers should be maintained with exceptionally keen cutting edges and highly polished flutes for smooth work.

3-203. The following procedures and tools are recommended for reaming aluminum alloys:

a. Tool material: High carbon steel for general use; high speed steel/or carbide tipped for durability and continued production jobs.

b. Tool type: Straight/spiral with 10° spiral flute and solid teeth.

c. Clearance and rake angles: Top rake 5° to 8°; clearance angle primary 4° to 7°, secondary angle 15° to 20°; cutting angle 84° to 90°.

d. Machine speed and hole reaming allowance: Cutting speeds up to 400 ft/min for straight holes, tapered hole should be somewhat slower about 300 - 350. The desired feed in inches/revolution is 0.003 to 0.010. Hole to be reamed should be undersize 0.005 - 0.015 inch diameter (reaming allowance).

e. Cutting fluids: Soluble oil/mixture of kerosene and lard oil, light weight machine oil.

3-204. SAWING. It should be emphasized that the same principles which govern the shape of cutting tools for aluminum should be applied, as far as practicable to saws for aluminum.

3-205. Band Saws. Band saw blades of spring temper steel having a tooth spacing from 4 to 11 teeth per inch and with amply radiused gullets are recommended for aluminum alloys. Curved or copying cuts are made with band saws. In any type of work, high blade speed are desirable with a speed range from 1,500 to 5,000 feet per minute. For heavy sections the saw teeth should be fairly coarse with a slight set and a slight amount of front rake, the restricted chip space requires the use of coarser tooth spacing of about four teeth per inch to avoid clogging and binding. Also the flexible back type of saw with teeth hardened to the bottom of the gullet is used for heavy work. Blades having as many as 14 teeth per inch are satisfactory for thin materials. A good and simple general rule to follow when sawing aluminum is that the spacing of the teeth on band saws for aluminum should be as coarse as is consistent with the thickness of the material being sawed. The softer alloys require appreciably more blade set than do the harder, heat treated alloys. Usually an alternate side rake of about 15° and a top rake or "hook" of 10° to 20° proves quite satisfactory. This amount of hook, however, requires a power feed and securely clamped work. For hand feeds the top rake must be reduced considerably to avoid overfeeding.

3-206. The band saw blades must be well supported by side rollers and back support both immediately below the saw table and about 2 or 3 inches above the work. The top blade supports are placed slightly in advance of those below the tables and the blade should be allowed to vibrate freely to eliminate excessive saw breakage. As a general rule, a noisy band saw is cutting more efficiently than the saw that cuts quietly. Quiet smooth cutting band saws usually produce smooth burnished surfaces accompanied by excessive heat and consequently decreased blade life.

3-207. Hack Saws. Hack saw blades of the wavyset type are well suited for cutting aluminum by hand. The wavy set type of blade having 5 to 15 teeth per inch has sufficient chip space to avoid clogging and binding on aluminum alloys. For extremely fine work a jewelers blade may be used.

3-208. Special routing machines are available which cut varied profiles from aluminum sheet or plate rapidly and efficiently.

3-209. Lubricants and coolants. Power hacksaws and hand saws require a cutting lubricant for most operations involving thick sections. Soluble oil

cutting compounds and neutral mineral-base lubricating oils applied to the sides of the blade aid in minimizing friction and gullet clogging. Light applications of heavy grease or paraffin wax will provide ample lubrication for some work. A wide selection of lubricants exists, ranging from tallow or grease stick to kerosene-thinned mineral base lubricating oil. Stick type lubricants should be applied very frequently. Experience has revealed in most cases it is more convenient and adaptable to use the fluid type lubricant applied freely through a recycling system directly to the blade and work stock.

3-210. GRINDING. The grinding characteristics of the various aluminum alloys vary in many instances. The harder free-cutting aluminum alloys may be ground satisfactorily with free cutting commercial silicon carbide grinding wheels, such as crystalon, carborundum and natalon. Rough grinding operations are usually performed by use of resin bonded wheels of medium hardeners and grit sizes of 24 to 30. Also the aluminum abrasives from No. 14 to No. 36 have been found to be satisfactory for rough grindings.

3-211. Common alloys, particularly in their softer tempers have a tendency to clog the wheels and do not finish to as bright and smooth a surface as the harder materials.

3-212. Caution should be taken in selecting the proper grade of each commercial make of wheel. Once the grinding wheel has been selected there are three variables that affect the quality of a finish; these are the wheel speed, work speed and grinding compound. Experienced operators have proven that their own good judgement is a determining factor as to the correct wheel and work speeds, however, wheel speeds of about 6,000 feet per minute have given good results.

3-213. For finish work, a soft silicon carbide wheel of 30 to 40 grit in a vitrified bond have proven to be very satisfactory. A grinding compound of soluble cutting oil and water works well. However, the fine grindings of aluminum must be strained from the compound before reusing in order to prevent deep scratches on the finished surface.

3-214. Special care should be exercised when grinding castings and wrought alloy products that have been heat treated, since their greater resistance to cutting or grinding generates a considerable amount of heat which may cause warping and damage to the material.

3-215. Lubricants and Coolants. Generous applications of stick grease are recommended to prevent clogging of the grinding wheels during rough grinding, while copious quantities of a low viscosity coolant type grinding compound are essential and recommended for finish grinding. Soluble oil emulsions of the proportions of 30 or 40 to 1 are most suitable.

3-216. POLISHING. Polishing or finishing aluminum and most of its alloys, by the application of proper machining procedures, gives it a smooth lustrous finish. Aluminum and its alloys are polished in the same manner as other metals, but a lower wheel-to-metal pressure is used for aluminum.

3-217. Polishing is the act of removing marks, scratches or abrasion on the metal resulting from previous handling and operations; it must be understood that a more gentle cutting action or finer abrasives are used for polishing aluminum than used for steel. The various operations covered under the polishing category include roughing, greasing or oiling, buffing and coloring. These operations are briefly described in the following paragraph.

3-218. ROUGHING. This is a term used to describe the preliminary finishing operation or process, used to prepare aluminum surfaces having deep scratches gouges or unusually rough surfaces, for subsequent polishing procedures. Roughing is not required on smooth undented or unscratched surfaces. The preliminary finishing or roughing process usually employs a flexible aluminum oxide paper disc, a semi flexible bonded muslin or canvas wheel, faced with suitable abrasives. Usually 50 - 100 grit abrasives are for this process and are set in an adhesive in accordance with standard practice. The peripheral speed of these discs runs around 6,000 feet per minute; faster wheel speeds would cause heating or ridging of the soft metal surface. Heating is also reduced by small applications of tallow or a tallow oil mixture.

3-219. GREASING OR OILING. This is a refined or gentle roughing procedure for finishing aluminum surfaces. Application is visually employed by a soft wheel faced with 100 to 200 grit aluminum oxide emery, plus a light coat of tallow or beeswax lubricant to prevent excessive heating. Here again, peripheral speeds of about 6,000 FPM are used.

3-220. Greasing or oiling is a necessary operation in finishing coatings and other fabricated work which has been marred by previous operations. Excess aluminum pick-up on the wheels as results from overheating will cause deep scratches in the metal.

3-221. BUFFING. This is a term used to describe a finishing procedure employed to obtain a smooth high luster on an aluminum surface. This high luster finish is obtained by use of a fine abrasive, such as tripole powder mixed with a grease binder, which is applied to the face of the wheel. These wheels usually consist of muslin discs sewed together, turned at a peripheral speed of 7,000 FPM.

3-222. Many factors, such as, the thread count of the buff, the pressure applied to the buff against the work, the buffing compound used, the speed of the buff or wheel and the skill and experience of the operator must be considered in obtaining a satisfactory and quality type finish.

3-223. HARDNESS TESTING.

3-224. Hardness is the resistance of a metal to deformation by scratching penetration or indentation, and is usually a good indication of strength. Metal hardness can be measured accurately by the Brinell, Rockwell or Vickers Process.

3-225. BRINELL HARDNESS. The Brinell technique is usually used to obtain the hardness of aluminum and aluminum alloys. This hardness value is obtained by applying a load through a ball indenter and measuring the permanent impression in the material. To obtain the hardness value of a material, divide the applied load in kilograms by the spherical area of the impression in square millimeters. Hardness value of aluminum alloy is tested by applying a load of 500 kilograms to a ball ten millimeters in diameter for 30 seconds.

3-226. NON-DESTRUCTIVE TESTING / INSPECTION.

3-227. Aluminum and aluminum alloys are susceptible to stress risers resulting from notching, nicking or scratching. A very close visual inspection is required of all raw material prior to any forming or machining operations. Before any fabrication commences it is necessary that all scratches, nicks and notches be removed by sanding, polishing and filing.

3-228. ANODIZING PROCESS FOR INSPECTION OF ALUMINUM ALLOY PARTS. Parts for which anodic coating is applicable in accordance with MIL-A-8625 Type I, can be anodized for the inspection of defects as cited in Specification MIL-I-8474.

3-229. The parts are examined visually for indications of cracks, forging laps or other defects. Parts inspected by this method shall be limited to sheet stock and surface defect of forgings. This method of inspection is not acceptable for inspection of parts subject to internal defects, i.e. inclusion in castings and forging or any part subject to internal stress, etc.

3-230. Defects are indicated by darkening of cracked or void areas after the anodic treatment. Insufficient rinsing in cold water after anodizing produces stains which may be confused with defects. In case of doubt strip film from part and reanodize. If the indications do not reappear the defects shall be considered absent and part should not be rejected for that reason.

NOTE

For additional general information on inspection and testing see Section VIII of this technical order.

3-231. ALUMINUM ALLOY EFFECTS ON SCRATCHES ON CLAD ALUMINUM ALLOY. The purpose of the following information on the effects of scratches on aluminum alloys is to assist in eliminating controversy in depots and field inspection, regarding serviceability of aluminum alloy, sheet, skin and aircraft structural parts which have been scratched, abraded or discolored from the stand point of corrosion resistance and fatigue strength.

3-232. In some instances, serviceable aluminum alloy parts and sheets, have been disposed of due to lack of knowledge by inspection personnel as to the effect of various depth scratches on the strength and corrosion resistance of the clad alloy. Also, attempts have been made to remove scratches from aircraft skin by sanding, buffing, or polishing resulting in removal of much of the cladding material and causing decrease in strength and corrosion resistance.

3-233. ALLOWABLE DEFECTS.

a. The following surface defects are those which do not affect the strength or corrosion resistance.

(1) Scratches which penetrate the surface layer of clad aluminum alloy sheets or parts but do not extend beneath the cladding are not serious or detrimental.

(2) The presence of small corroded areas will not materially affect the strength of clad unless the corroded pitted area extends through the cladding down to or into the bare metal Clean corroded areas thoroughly by authorized methods (See Paragraph 3-242).

(3) Stains are not grounds for rejection since they affect neither the strength nor the corrosion resistance.

CAUTION

No attempt will be made to remove scratches or other surface defects by sanding or buffing since the protective layer of cladding will be removed by such operations.

3-234. HARMFUL SCRATCHES. Scratches which extend through the cladding and penetrate the core material act as notches and create stress concentrations which will cause fatigue failure if the part is highly stressed or subjected to repeated small stress reversals. However, sheets so scratched may utilized for non-stressed applications.

3-235. INSPECTION. Assemblies fabricated from clad aluminum-alloy sheets will not be rejected by inspection personnel, unless the defect is of sufficient depth to adversely affect the mechanical properties or cover sufficient area to impair the corrosion resistance of the assembly. Scratches or abrasions which penetrate the cladding will not affect corrosion resistance. Scratches resulting from the normal handling and processing of clad aluminum-alloy sheet rarely extend through the cladding and penetrate the core.

3-236. TEST FOR DEPTH OF SCRATCHES. Since it is very difficult to measure the depth of a scratch on a sheet without cross sectioning the sheet, it has been found convenient (on clad material) to use a "spot" test to determine whether or not a scratch extends through the cladding.

3-237. On alloys except 7075 and 7178 the "spot" test is made by placing a drop of caustic solution (10% by weight of sodium hydroxide, NaOH, in water) on a portion of the scratch, and allowing it to react for 5 minutes. The caustic solution will then be rinsed off the sheet with water, and the spot allowed to dry. If a black residue remains in the base of the scratch at the spot tested, it indicates that the scratch extends to the core. If no black color is visible and only a white residue remains in the base of the scratch, it indicates that the scratch does not penetrate through the cladding. For alloys 7075 and 7178 a drop of 10% cadmium chloride solution will produce a dark discolorationm within two minutes if the scratch penetrates the clad. The cadmium chloride applied as above will not cause 2024 to discolor within two minutes.

3-238. When making the "spot" test to determine whether a scratch extends to the core, it is advisable for comparison purposes to spot test an adjacent area in which there are no scratches. It is then easier to determine whether the residue which remains is black or white.

3-239. Before making the "spot" test, the sheet area will be cleaned and degreased with solvent Federal Specification P-D-680, Type II, or other suitable solvent, so that the caustic solution will react properly.

3-240. Caution will be exercised to make sure that all of the caustic solution is removed from the sheet by thorough rinsing, since the caustic solution is very corrosive to aluminum and aluminum alloys. Care wi11 be taken not to use excessive amounts of the caustic solution for the same reason and it is preferable that only one drop be used for each test. The caustic solution will be prepared fresh for each series of tests to be made.

3-241. DISPOSITION OF SCRATCHED SHEETS/PARTS.

a. All scratched clad aluminum-alloy sheets wi11 be utilized to the fullest extent. Serviceable portions of damaged sheets will be used in the manufacture of smaller parts and assemblies. Only that portion of sheet that is scratched and otherwise damaged beyond serviceability will be administratively condemned.

b. Parts (air weapon) shall be closely inspected as cited and they do not meet specified requirement shall be condemned and replaced as directed.

3-242. CLEANING OF ALUMINUM ALLOY SHEET (STOCK).

3-243. Solvent Cleaning. Stubborn or exceptionally oily sheets may be cleaned by using solvent, Federal Specification P-D-680, Type II, before cleaning with alkali solution. The cleaning will be accomplished by brushing, soaking, scrubbing and wiping. Material or equipment that would scratch or abrade the surface shall not be used. Also material shall not be stored after solvent cleaning and prior to alkaline cleaning, unless solvent is completely removed from the surfaces of the metal.

3-244. Alkali Cleaning Solution. Composition of solution is 4 to 6 oz of cleaner specification MIL-C-5543 to one gallon of water. The material is cleaned by immersing in the solution (as prepared by instructions cited in paragraph 3-245) for 4-6 minutes, thoroughly rinsing in water (fresh tap) and then completely drying. Never pile/store material while damp, wet or moist. Refer to T.O. 00-85A23-1 for packaging and storage.

CAUTION

Do not use strong alkali solution because it will etch the aluminum.

3-245. Preparation. Use water heated to a temperature of 170°F (77°C). Add not more than one pound of cleaner at a time. Prepare the solution in the following manner:

a. Fill the task 1/2 to 2/3 full of water.

b. Carefully dissolve the alkaline cleaner.

c. Add water to operating level and stir thoroughly with a wooden paddle or other means.

3-246. Maintain solution in the following manner:

a. Add tap water to balance-up solution loss.

b. Make addition as required to maintain the active alkali concentration between 4 and 6 oz alkaline cleaner for each gallon of water added and stir thoroughly.

c. Prepare a new solution when contamination impares the cleaning ability of the solution.

d. Clean the tank thoroughly before preparing a new solution.

3-247. Corrosion Removal from Aluminum Alloy Sheets. Corrosion is removed by immersing the sheet in the following acid cleaning solution:

CAUTION

When using acid solution wear approved clothing, acid resisting gloves, aprons/ coveralls, face shields or respirator. If solution is splashed into eyes, flush thoroughly with water immediately, and then report to dispensary. For special instructions, contact local safety officer

a. Nitric-Hydrofluoric Acid Cleaning. The solution shall consist of 1 gallon technical nitric acid (58-62% HNO_3) (39.5° Be).

1/2 pint technical hydrofluoric acid (48°HF) (1.15 Sp).

9 gallons of water.

b. Parts shall be immersed for 3 to 5 minutes in cold acid (50° - 105°F).

3-248. After removing from the acid, the parts shall be washed in fresh hot or cold running water for a sufficient length of time to thoroughly remove the acid. Diluted solution of sodium dichromate ($Na_2Cr_2O_7$) 12 to 14 ounces per gallon of water, shall be added to the rinse water as a corrosion inhibitor. The rinsing time depends upon the freshness of the solution, size of the part and the amount of solution circulated. One half hour or less should be sufficient. Parts shall then be completely dried by blasting with compressed air or other approved method.

NOTE

The sheet will stain when rinsed with sodium dichromate. The stronger the solution the darker the stain. A light detectable stain is desired on corroded areas. If the stain is dark reduce the amount of sodium dichromate added to rinse water.

3-249. Corrosion Removal and Treatment of Aluminum Sheets When Immersion Is Not Practical.

3-250. The surface shall be cleaned with water base cleaner, Specification MIL-C-25769, Type II.

a. Heavily soiled areas. Dissolve the contents of two 5-pound packages in 10 gallons of water. Stir with a wooden paddle until fully dissolved.

b. Lightly soiled areas. Dissolve four 5-pound packages in 50 gallons of water (a 55 gallon drum is suitable for this purpose). Agitate thoroughly with wooden paddle to insure proper mixture.

c. Application. Apply the solution by spraying, or with a mop, sponge, or brush. Allow to remain on the surface for several minutes while agitating with a brush. Rinse thoroughly with a spray or stream of water. Do not allow solution to dry before rinsing as less effective cleaning will result.

3-251. Corrosion Removal. To remove corrosion products use a metal conditioner and brightener, Specification MIL-C-38334.

WARNING

When using acid solution wear approved clothing, acid resistant gloves, aprons/coveralls, face shields or respirator. If solution is splashed into eyes, flush thoroughly with water immediately, and then report to dispensary. For special instructions contact local safety officer.

CAUTION

Metal conditioner and brightener is for use only on aluminum alloys, and it shall not be used just for the sake of improving the appearance of material. Material in storage shall not be treated with this material more than one time.

a. Prepare the brightening solution by mixing Specification MIL-C-38334 compound with an equal amount of water, in a rubber pail.

b. Apply enough diluted brightener to completely cover the area being treated with a non-metallic bristle brush.

c. Agitate the brightener by scrubbing with a non-metallic bristle brush. Depending on the ambient temperature and amount of corrosion deposits present, allow approximately 5 to 10 minutes from application of brightener before rinsing. When using brightener at high ambient temperature (above 80°F) leave brightener on for shorter periods of time. Do not leave brightener on the surface longer than necessary to dissolve the corrosion.

d. Rinse the brightener from the surface (using approximately 50 gallons of water per minute. Insure that all traces of brightener have been removed (shown by no foaming or bubbles while rinsing).

3-252. Chromate Conversion Coating Specification MIL-C-5541, for aluminum alloys. Aluminum alloys which are treated with Specification MIL-C-38334 shall be treated with Specification MIL-C-5541. Most solutions conforming to Specification MIL-C-5541 leave a stain. A clear Specification MIL-C-5541 coating is available (reference QPL 5541) and should be used when a bright metal finish is desired.

WARNING

- Conversion coating is a toxic chemical and requires use of rubber gloves by personnel during its application. If acid, accidentally contacts the skin or eyes, flush immediately with plenty of clear water. Consult a physician if eyes are affected or if skin is burned.
- Do not permit Specification MIL-C-5541 material to contact paint thinner, acetone or other combustible materials. Fire may result.

a. Mix the solution in a stainless steel, rubber or plastic container; not in lead, copper alloy or glass.

b. Mix in accordance with manufacturers instructions.

c. Apply the conversion coating (light) by using a fiber bristle brush or a clean, soft cloth. Keep the surface wet with the solution until a coating is formed which may take from 1 to 5 minutes depending on the surface condition of the metal.

NOTE

Do not permit excess conversion coating to dry on the metal surface because the residue is difficult to flush off with water.

d. Rinse with clear water, or sponge the area with a clean, moist cloth, frequently rinsing the cloth in clear water. Thorough rinsing is required.

e. Allow the surface to air dry. To speed drying the surface may be blown dry with warm clean air (140°F maximum).

WARNING

Any absorbent material used in applying or wiping up MIL-C-5541 material shall be rinsed in water before discarding. They are extreme fire hazards if allowed to dry otherwise.

CAUTION

Avoid brushing or rubbing the newly applied chemical conversion coating, since it is soft and can be easily rubbed off the surface before completely drying.

NOTE

- A light (just visible to the naked eye) evenly dispersed conversion coating is all that is required. It is recommended that a test panel be prepared and subjected to complete cleaning/ treating procedure before applying material to a sheet. The test panel shall be used to determine the dwell time of MIL-C-5541 material. When clear material is being used, no control of discoloration is necessary.
- After the procedures cited in paragraphs 3-252 through 3-263 have been complied with, an AF Form 50A will be attached to each sheet with a statement that, "This material has been cleaned and treated for corrosion in accordance with T.O. 1-1A-9 Section III, date . . . . . ." If original markings are removed as a result of the cleaning and treatment process, the material shall be remarked (staggered) at each end and in the middle with the Specification, size/thickness, temper and type or grade. The marking may be applied with Black paint Specification TT-L-50, MIL-E-7729 or "Magic Marker" manufactured by Speeddry Products Inc., Richmond Hill, N.Y. or "Equal". A felt tip pen may also be used.

3-253. For Packaging, Packing,. and Storage of Aluminum Alloy Sheets and Plates Refer to T.O. 00-85A-23-1.

3-254. ANODIC COATINGS FOR ALUMINUM. Anodizing is the anodic process of treating aluminum alloys; a thin film of artificially produced oxide is formed on the surface of the metal by electrochemical reaction. Military Specification MIL-A-8625 lists the requirements of aluminum anodizing, and TO 42C2-1-7 gives the anodizing process.

3-255. Military Specification MIL-C-5541 lists the requirements for corrosion protection and paint base of aluminum by the use of chemical film. These chemical films are substitutes that may be used in lieu of anodic films, and may be applied by spray, brush, or immersion as specified by QPL-5541. The anodizing method is preferrable to chemical films on aluminum parts where facilities are available. For process procedures applying to chemical films, refer to Technical Orders 1-1-8 and 1-1-2.

SECTION IV

MAGNESIUM ALLOYS

4-1. CLASSIFICATION.

4-2. Magnesium alloys are produced and used in many shapes and forms, i.e., castings, extruded bars, rods, tubing, sheets and plate and forgings. They are suitable for varied stress and non-stress aerospace applications. Their inherent strength, lightweight, shock and vibration resistance are factors which make their use advantageous. The weight for an equal volume of magnesium is approximately two-thirds of that for aluminum and one-fifth of that for steel.

4-3. The current system used to identify magnesium alloys, is a two letter, two or three digit number designation in that order. The letters designate the major alloying elements, (arranged in decreasing percentage order, or in alphabetical order if the elements are of equal amounts), followed by the respective digital percentages of these elements. The percentage is rounded off to the nearest whole number or if a tolerance range of the alloy is specified, the mean of the range (rounded off to nearest whole number) is used. A suffix letter following the percentage digits, denotes the latest qualified revision of the alloy. For example: Alloy Designation AZ92A would consist of 9% (mean value) aluminum and 2% (mean value) zinc as the major alloying elements. The suffix "A" indicates this is the first qualified alloy of this type. One exception to the use of the suffix letter is that an "X" denotes that impurity content is controlled to a low limit. Some of the letters used to designate various alloying elements are:

A Aluminum,	E Rare Earth,
H Thorium,	K Zirconium,
M Manganese,	Z Zinc.

4-4. DEFINITIONS.

4-5. HARDNESS. Hardness is the resistance of a metal to plastic deformation from penetration, indentation, or scratching. The degree of hardness is usually a good indication of the metals strength. The hardness of a metal can be accurately measured using the Brinell on Rockwell process of testing. Tables 4-4, 4-5 and 4-6 list the nominal hardness of various magnesium alloys. Brinell hardness testing is explained in Section VIII of this manual.

4-6. TENSILE STRENGTH. The useful tensile strength of a metal is the maximum stress it can sustain in tension or compression without permanent deformation. The yield strength is that point of stress, measured in pounds per square inch, at which permanent deformation results from material failure. The data in Tables 4-4, 4-5 and 4-6 lists the nominal yield strengths of various alloys. The yield point in magnesium is not reached abruptly, but rather a gradual yielding when the metal is stressed above the proportional limit. Tensile and yield strengths decrease at elevated temperatures.

4-7. TEMPER is the condition produced in the alloy by mechanically or thermally treating it to alter its mechanical properties. Mechanical includes cold rolling, cold working, etc.; thermal includes annealing, solution and precipitation heat treat and stabilization treating. See paragraph 4-12 for temper designations.

4-8. SHEAR STRENGTH is the maximum amount (in pounds per square inch) in cross sectional stress that a material will sustain before permanent deformation or rupture occurs.

4-9. ELONGATION is the linear stretch of a material during tensile loading measured before and after rupture. In magnesium it is the increase in distance which occurs when stretch is applied between two gage marks placed 2 inches apart on the test specimen. After rupture the two pieces are fitted together and remeasured. The elongation is the percentile difference of the amount of stretch in ratio to the original 2 inches.

4-10. PHYSICAL PROPERTIES. Magnesium, in its pure state, has a specific gravity of 1.74, weighing .063 pounds per cubic inch. Similar data for magnesium alloys are included in Table 4-6 as well as other physical property information.

4-11. CHEMICAL PROPERTIES. Chemically bare magnesium is resistant to attack by alkalis, chromic and hydrofluoric acids and many organic chemicals including hydrocarbons, aldehydes, alcohols, phenols, amines, esters and most oils. It is susceptible to attack by salts and by galvanic corrosion from contact with dissimilar metals and other materials. Adequate protection of the metal against unfavorable conditions can be maintained generally, by using proper surface finish (See paragraph 4-93) and assembly protection. The chemical property constituents of the various alloys are listed in Table 4-3.

4-12. TEMPER DESIGNATION SYSTEM. The hyphenated suffix symbol which follows an alloy designation denotes the condition of temper, (heat

treat or strain hardening), to which the alloy has been processed. These symbols and their meanings are listed below: (Heat treating itself is discussed in subsequent paragraphs of this section of the manual).

-AC As-Cast
-F As-fabricated
-O Annealed
-W Solution heat treated - unstable temper
-T Treated to produce stable tempers other than for -O
-T2 Annealed (cast products only)
-T3 Solution heat treated and then cold worked
-T4 Solution heat treated
-T5 Artificially aged only
-T6 Solution heat treated and then artificially aged
-T7 Solution heat treated and stabilized
-T8 Solution heat treated, cold worked and then artificially aged
-T9 Solution heat treated, artificially aged and then cold worked
-T10 Artificially aged and then cold worked
-H1 Strain hardened only
-H2 Strain hardened and partially annealed
-H3 Strain hardened and stabilized

Added suffix digits 2, 4, 6, 8, to the H1, H2, H3 symbols indicate the degree of strain hardening, i.e., 2=1/4 hard, 4=1/2 hard, 6=3/4 hard, and 8=full hard.

4-13. SAFETY REQUIREMENTS FOR HANDLING AND FABRICATION OF MAGNESIUM ALLOYS.

4-14. There are two special major areas of safety precautions to observe in proceeding of magnesium alloys other than general shop safety practices. One is the fact some alloys contain thorium, a radioactive element (e.g., HK31A, HM21A, HM31A) and the other is the low melting point/ rapid oxidation (fire hazard) characteristics of the metal. Where the application of heat is to be made to a thorium alloy, both of these areas must be considered.

WARNING

Magnesium thorium alloys shall be handled, stored and disposed of in accordance with T.O. 00-110N-4.

4-15. MAGNESIUM-THORIUM ALLOYS (HK31, HM21, HM31, HZ32, ZH42, ZH62) are mildly radioactive but are within the safe limits set by the Atomic Energy Commission (AEC) and represent no hazard to personnel under normal conditions. A standard of 0.1 milligram per cubic meter (mg/m3) of thorium in air is a safe limit for continuous atmospheric exposure and is readily met in processing magnesium alloys containing up to 10% thorium, For example: Stirring alloy melt of 5% thorium content resulted in 0.002 mg/m3 atmospheric contamination and grinding air alloy of 3% thorium content gave thorium contamination in the breathing zone ranging from 0.008 to 0.035 mg/m3. Only long exposure to fine dust or fumes need cause concern as to radioactive toxicity of magnesium-thorium. Normal dust control precautions, followed to avoid fire hazards, can be expected to control any health hazards that might result from fine dust in grinding the low thorium content alloys. In welding these alloys without local exhaust, concentrations of thorium above the tentative limit of 0.1 mg/m3 of air were found in the breathing zone. Use of local exhaust reduced thorium concentrations to well within acceptable 1imits . If ventilation is such that the visible fumes flow away from the welder, it is adequate, providing such fumes are not permitted to accumulate in the immediate vicinity. An alternate practice involves use of ventilated welder's hood, if there is not sufficient room ventilation to control contamination of the general atmosphere. Thorium containing scrap and wet grinding sludge may be disposed of by burning providing an AEC ammendment is secured for the basic AEC license. If burned, the ashes which will then contain the thorium, must be disposed of in accordance with AEC Standards for Protection Against Radiation 10 CFR Part 20. As an alternative the ashes or scrap may be turned over to an AEC licensed scrap dealer, through applicable disposal procedures, See T.O.00-110N-4

4-16. For indoor storage of thorium alloy sheets and plates, the size of stacks should be limited to 1000 cubic feet with an aisle width not less than one-half the stack's height. Such storage is within the normal recommendations for fire safety.

4-17. Radiation surveys have shown that exposure of workers handling the referenced thorium alloys is well within the safe limits set by the AEC. Assuming hand contact, the body one foot away from the alloy for an entire 40 hour work week, the exposure would be 168 millirems (mr) to the hands and 72 mr to the whole body. These are maximum values which probably would not be approached in actual practice. The corresponding AEC permissible safe limits are 1500 mr/week for the hands and 300 mr/week for the whole body.

4-18. Despite the relative safety present in the handling, to rage and processing of thorium containing alloys, it is mandatory that all such actions be made according to the requirements and

restrictions of the 00-100 series technical orders, as applicable, and AEC regulations. As previously stated, the normal precautions taken in the shop processing of magnesium will suffice for safe handling of thorium alloys. These precautions are noted in the following paragraphs on safety precautions.

4-19. SAFETY PRECAUTIONS FOR ALL ALLOYS (INCLUDING FIRE HAZARDS).

4-20. Since magnesium will ignite and burn fiercely when heated to a point near its melting temperature, certain precautions should be taken during working of it.

4-21. Machining Safety Rules. During machining operations, observance of the following rules will control any potential fire hazard:

a. Keep all cutting tools sharp and ground with adequate relief and clearance angles

b. Use heavy feeds to produce thick chips.

Table 4-1. Cross-Reference, Alloy Designation to Specifications

ALLOY	FED SPEC	MIL SPEC	HNBK	SAE AMS	ASTM (ASME)	USE
AM100A	QQ-M-56	_ _			B80	Sand Casting
	QQ-M-55	_ _	502	4483	B199	Permanent Mold Casting
AZ31B	QQ-M-31	_ _	52		B107	Extruded Bars, Rods, Shapes
	QQ-M-40	_ _	510		B91	Forgings
	WW-T-825	_ _	52		B217	Extruded Tubes
	QQ-M-44	_ _	510	4375	B90	Sheet and Plate
	QQ-M-44	_ _	510	4376	B90	Sheet and Plate
	QQ-M-44	_ _	510	4377	B90	Sheet and Plate
		MIL-R-6944	_ _	_ _	B260	Welding Rod
AZ31C	_ _ _ _	_ _	_ _	_ _	B107	Extruded Bars, Rods, Shapes
	_ _ _ _	_ _	_ _	_ _	B217	Extruded Tubes
	_ _ _ _	_ _	_ _	_ _	B90	Sheet and Plate
AZ61A	QQ-M-31	_ _	520	4350	B107	Extruded Bars, Rods, Shapes
	QQ-M-40	_ _	530	4358	B91	Forgings
	WW-T-825	_ _	520	4350	B217	Extruded Tubes
		MIL-R-6944	_ _	_ _	B260	Welding Rod
AZ63A	QQ-M-56	MIL-C-19163	50	4420, 4422	B80	Sand Castings
	QQ-M-56	MIL-C-19163	50	4424	B80	Sand Castings
	QQ-M-55	MIL-C-19163	_ _	_ _	B199	Permanent Mold Castings
	_ _ _ _	MIL-R-6944	_ _	_ _	B260	Welding Rod
AZ80A	QQ-M-31	_ _ _	523	_ _	B107	Extruded Bars, Rods, Shapes
	QQ-M-40	_ _ _	532	4360	B91	Forgings
AZ81A	QQ-M-56	_ _ _	505	_ _	B80	Sand Castings
	QQ-M-55	_ _ _	505	_ _	B199	Permanent Mold Castings
AZ91A	QQ-M-55	_ _ _	_ _	_ _	B199	Permanent Mold Castings
	QQ-M-38	_ _ _	501	4490	B94	Die Castings
AZ91B	QQ-M-38	_ _ _	501	_ _	B94	Die Castings
AZ91C	QQ-M-56	_ _ _	504	4437	B80	Sand Castings
	QQ-M-55	_ _ _	_ _	_ _	B199	Permanent Mold Castings
AZ92A	QQ-M-56	MIL-C-19163	500	4434	B80	Sand Castings

Table 4-1. Cross-Reference, Alloy Designation to Specifications - Continued

ALLOY	FED SPEC	MIL SPEC	HNBK	SAE AMS	ASTM (ASME)	USE
AZ92A (Cont)	QQ-M-55	MIL-C-19163	503	4484	B199	Permanent Mold Castings
	_ _ _ _	MIL-R-6944	_ _	_ _	B260	Welding Rod
EK30A	QQ-M-56	_ _ _	_ _	_ _	B80	Sand Castings
EK41A	QQ-M-56	_ _ _	_ _	4440, 4441	B80	Sand Castings
	QQ-M-55	_ _ _	_ _	_ _	B199	Permanent Mold Castings
EZ33A	QQ-M-56	_ _ _	506	4442	B80	Sand Castings
	QQ-M-55	_ _ _	506	_ _	B199	Permanent Mold Castings
	_ _ _ _	MIL-R-6944	_ _	_ _	B260	Welding Rod
HK31A*	QQ-M-56	_ _ _	507	4445	B80	Sand Castings
	_ _ _ _	MIL-M-26075	507	4384	B90	Sheet and Plate
		MIL-M-26075		4385		
*	_ _ _ _	MIL-R-6944	_ _	_ _	B260	Welding Rod
HK21A*	QQ-M-40	_ _ _	_ _	_ _	_ _	Forgings
	_ _ _ _	MIL-M-8917	_ _	4390	B90	Sheet and Plate
HM31A*	_ _ _ _	MIL-H-8916	_ _	4388	B107	Extruded Bars, Rods, Shapes
	_ _ _ _	MIL-H-8916	_ _	4389	_ _	Extruded Bars, Rods, Shapes
HZ32A*	QQ-M-56	_ _ _	_ _	4447	B80	Sand Castings
KIA	QQ-M-56	MIL-M-45207	_ _	_ _	B80	Sand Castings
MIA	QQ-M-31	_ _ _	522	_ _	B107	Extruded Bars, Rods, Shapes
	QQ-M-40	_ _ _	533	_ _	_ _	Forgings
	WW-T-825	_ _ _	522	_ _	B217	Extruded Tubes
	QQ-M-44	_ _ _	51	_ _	B90	Sheet and Plate
	_ _ _ _	MIL-R-6944	_ _	_ _	B260	Welding Rod
QE22A	QQ-M-56	_ _ _	_ _	_ _	_ _	Sand Castings
	QQ-M-55	_ _ _	_ _	_ _	_ _	Permanent Mold Castings
TA54A	QQ-M-40	_ _ _	53	_ _	B91	Forgings
ZE10A	_ _ _ _	_ _ _	534	_ _	B90	Sheet and Plate
ZE41A	QQ-M-56	_ _ _	_ _	_ _	_ _	Sand Castings
ZH42*	_ _ _ _	_ _ _	_ _	_ _	_ _	Sand Castings
ZH62*	QQ-M-56	_ _ _	508	4438	B80	Sand Castings
ZK21A	_ _ _ _	MIL-M-46039	_ _	4387	_ _	Extrusions

Table 4-1. Cross-Reference, Alloy Designation to Specifications - Continued

ALLOY	FED SPEC	MIL SPEC	HNBK	SAE AMS	ASTM (ASME)	USE
ZK51A	QQ-M-56	_ _ _	509	4443	B80	Sand Castings
ZK60A	QQ-M-31	_ _ _	524	4352	B107	Extruded Bars, Rods, Shapes
	QQ-M-40	_ _ _	_ _	4362	B91	Forgings
	WW-T-825	_ _ _	524	4352	B217	Extruded Tubes
ZK60B	_ _ _ _	MIL-M-26696	_ _	_ _	_ _	Extruded Bars, Rods, Shapes
ZK61A	QQ-M-56	_ _ _	513	4444	B80	Sand Castings

*These alloys contain radioactive thorium element. See paragraph 4-15 for precautionary instructions.

MISC SPECIFICATION

MIL-M-3171 Magnesium alloy, processes for corrosion protection of

SAE-AMS-M-6857 Magnesium alloy castings, heat treatment of

Table 4-2. Alloy Designation Cross-Reference

NEW DESIGNATOR	FORMER DOW REVERE	FORMER AMERICAN MAGNESIUM	FORMER * MILITARY	NEW FEDERAL	USE
AZ63A	H	AM265	_ _ _ _	QQ-M-56	Castings, Sand
MIA	M	AM3S	AN-M-26	QQ-M-31	Extruded Bars, Rods, Shapes
MIB	M	AM403	AN-M-30	QQ-M-56	Castings, Sand
MIA	M	AM3S	AN-T-73	WW-T-825	Extruded Tube
MIA	M	AM3S	AN-M-22	QQ-M-40	Forgings
MIA	M	AM3S	AN-M-30	QQ-M-44	Sheet
A292A	C	AM260	_ _ _ _	QQ-M-56	Castings, Sand
AZ92A	C	AM260	_ _ _ _	QQ-M-55	Castings, Perm Mold
AM100A	G	AM240	_ _ _ _	QQ-M-55	Castings, Perm Mold
AZ91A	R	AM263	AN-M-16	QQ-M-38	Castings, Die
AZ31B	FS-1	AM52S	AN-M-27	QQ-M-31	Extruded Bar, Rod, Shape
AZ31B	FS-1	AM52S	AN-T-72	WW-T-825	Extruded Tube
AZ31B	FS-1	AM52S	_ _ _ _	_ _ _ _	Forgings
AZ31B	FS-1	AM52S	AN-M-29	QQ-M-44	Sheet
AZ61A	J-1	AMC57S	AN-M-24	QQ-M-31	Extruded Bar, Rod, Shape
AZ61A	J-1	AMC57S	AN-T-71	WW-T-825	Extruded Tubes
AZ61A	J-1	AMC57S	AN-M-20	QQ-M-40	Forgings
AZ80A	0-1	AMC58S	AN-M-25	QQ-M-31	Extruded Bar, Rod, Shape
AZ80A	0-1	AMC58S	AN-M-21	QQ-M-40	Forgings
ZK60A	_ _	AMA76S	_ _ _ _	QQ-M-31	Extruded Bar, Rod, Shape
EX41A	_ _	AMA130	_ _ _ _	_ _ _ _	Castings, Perm Mold
EZ33A	_ _	AMA131	_ _ _ _	_ _ _ _	Castings, Perm Mold
TA54A	_ _	AM65S	_ _ _ _	QQ-M-40	Forgings

NOTES: *These “AN” Specifications have been superseded by the listed Federal Specifications.

Table 4-3. Chemical Properties of Magnesium Alloys

ALLOY	AL	MN	ZINC	ZIRCONIUM	RARE EARTH	THORIUM	SI	CU	NICKEL	MG	FORMS
AM100A AZ31B(1)(2)	9.3-10.7 2.5-3.5	0.10 0.20	0.30max 0.6-1.4	--- ---	--- ---	--- ---	0.30 0.10	0.10 0.05	0.01 0.005	Bal Bal	Castings, sand, perm mold Extruded Bars, rods, shapes tubes = sheets
AZ31C AZ63A(2)	2.4-3.6 5.3-6.7	0.15 0.15	0.5-1.5 2.5-3.5	--- ---	--- ---	--- ---	0.10 0.10	0.10 0.05	0.03 0.005	Bal Bal	Same Castings, sand and perm mold
AZ80A	7.8-9.2	0.12	0.2-0.8	---	---	---	0.30	0.25	0.01	Bal	Extruded bars, rods, shapes, forgings
AZ81A	7.0-8.1	0.13	0.40-1.0	---	---	---	0.30	0.10	0.01	Bal	Castings, sands and perm mold
AZ91A	8.1-9.3	0.13	0.4-1.0	---	---	---	0.30	0.10	0.01	Bal	Castings, perm mold
AZ91A	8.1-9.7	0.13	0.4-1.0	---	---	---	0.50	0.10	0.03	Bal	Castings, Die
AZ91B	8.3-9.7	0.13	0.4-1.0	---	---	---	0.50	0.30	0.03	Bal	Castings, Die
AZ91C	8.1-9.3	0.13	0.4-1.0	---	---	---	0.30	0.10	0.01	Bal	Castings, sand and perm mold
AZ92A	8.3-9.7	0.10	1.6-2.4	---	---	---	0.30	0.25	0.01	Bal	Same
EK30A	---	---	0.3 max	0.20 min	2-3.0	---	---	0.10	0.01	Bal	Castings, sand only
EK41A	---	---	0.3	0.4-1.0	3.0-5.0	---	---	0.10	0.01	Bal	Castings, sand and perm mold
EZ33A	---	---	2.0-3.1	0.5-1.0	2.5-4.0	---	---	0.10	0.01	Bal	Castings, Sand/Sheet Plate
HK31A*	---	0.15mx	0.3mx	0.4-1.0	---	2.5-4.0		0.10	0.01	Bal	Castings, Sand/Sheet/Plate
HM21A*	---	0.45-1.1	---	---	---	1.5-2.5	---	---	---	Bal	Forgings, Sheet/Plate
HM31A*	---	1.2mn	---	---	---	2.5-3.5	---	---	---	Bal	Extruded Bars/Rods/Shapes
HZ32A*	---	---	1.7-2.5	0.5-1.0	0.1mx	2.5-4.0	---	0.10	0.01	Bal	Castings, Sand
KIA	---	---	---	0.4-1.0	---	---	---	---	---	Bal	Castings, Sand
MIA(1)	---	1.2	---	---	---	---	0.10	0.05	0.01	Bal	Extruded Bars, rods, shapes tube-sheets-forgings
QE22A(3)	---	---	---	0.4-1.0	1.8-2.5	---	---	0.10	0.01	Bal	Castings, sand
TA54A(4)	3.0-4.0	0.20	0.3mx	---	---	---	0.30	0.05	0.01	Bal	Forgings
ZE10A	---	---	1.0-1.5	---	0.12-0.22	---	---	---	---	Bal	Sheet and Plate

Table 4-3. Chemical Properties of Magnesium Alloys - Continued

ALLOY	AL	MN	ZINC	ZIRCONIUM	RARE EARTH	THORIUM	SI	CU	NICKEL	MG	FORMS
ZE41A	---	---	4.25	0.5	1.25	---	---	---	---	Bal	Castings, Sand
ZH42*	---	---	3.0-4.5	0.5	---	1.5-2.5	---	---	---	Bal	Castings, Sand
ZH62A*	---	---	5.2-6.2	0.5-1.0	---	1.4-2.2	---	0.10	0.01	Bal	Castings, Sand
ZK20A	---	---	2.0-2.6	0.45mn	---	---	---	---	---	Bal	Extrusions
ZK51A	---	---	3.6-5.5	0.5-1.0	---	---	---	0.10	0.01	Bal	Castings, Sand
ZK60A	---	---	4.8-6.2	0.45	---	---	---	---	---	Ba1	Extruded Bars/Rods/Shapes Tube-Forgings
ZK60B	---	---	4.8-6.8	0.45	---	---	---	0.10	0.01	Bal	Same

*NOTE: These alloys contain radioactive thorium. See paragraph 4-15
(1) Calcium, AZ31B, 0.04---MIA, 0.4.0.14
(2) Iron, AZ31B, 0.005---AZ61A, 0.005---AZ63A, 0.005.
(3) Silver, QE22A, 2.5-3.0
(4) Tin, TA54A, 4.6-6.0

Table 4-4. Mechanical Properties Magnesium Extrusions and Forgings at Room Temperature - Typical

ALLOY & C0ND	FORM	DIEMN (DIA THICKNESS: WALL THKNESS - IN'S)	CROSS SEC-TIONAL AREA (INCHES)	MIN TEN-SILE STR (1000PSI)	MIN TEN YLD STR (1000PSI)	MIN ELONGA-tion (2″ %)	MIN SHEAR STR (1000PSI)	HARDNESS (BRINELL)
AZ31B-F	Bars, Rods,	0.249 and under	All areas	35	21	7	17	--
and	shapes	0.250-1.499	All areas	35	22	7	17	49
AZ31C-F		0.500-2.499	All areas	34	22	7	17	--
		2.500-4.999	All areas	32	20	7	--	--
	Hollow shapes	All dimensions	All areas	32	16	8	17	49
AZ61A-F	Bars, rods,	0.249 and under	All areas	38	21	8	--	--
	shapes	0.250-1.499	All areas	39	24	9	18	60
		0.250-4.999	All areas	40	22	7	--	--
	Hollow shapes	All dimensions	All areas	36	16	7	18	60
AZ80A-F	Bars, Rods,	0.249 and under	All areas	43	28	9	19	60
	shapes	0.250-1.499	All areas	43	28	8	19	60
		1.500-2.499	All areas	43	28	6	19	60
		2.500-4.999	All areas	42	27	4	--	60
T-5	Same	0.249 and under	All areas	47	30	4	--	82
		0.250-2.499	All areas	48	33	4	21	82
		2.500-4.999	All areas	45	30	2	--	82
HM31A-T5*	Bars, rods, shapes	Not applicable	Under 4.000	37	26	4		
MIA-F	Bars, rods,	0.249 and under	All areas	30	not req	2	--	44
	shapes	0.250-1.499	All areas	32	not req	3	15	44
		1.500-2.499	All areas	32	not req	2	15	44
		2.500-4.999	All areas	29	not req	2	--	44
	Hollow shapes	All dimensions	All areas	28	not req	2	15	44
ZK60A-F	Bars, rods,	All dimensions	4.999 and under	43	31	5	22	75
	shapes		5.000-29.999	43	31	4	22	75
	Hollow shapes	All dimensions	All areas	40	28	5	--	--
T5	Bars, rods, shapes	All dimensions	4.999 and under	45	36	4	22	82
	Hollow shapes	All dimensions	All areas	46	38	4	22	82

Table 4-4. Mechanical Properties Magnesium Extrusions and Forgings at Room Temperature - Typical - Continued

ALLOY & C0ND	FORM	DIEMN (DIA THICKNESS: WALL THKNESS - IN'S)	CROSS SEC-TIONAL AREA (INCHES)	MIN TEN-SILE STR (1000PSI)	MIN TEN YLD STR (1000PSI)	MIN ELONGA-tion (2″ %)	MIN SHEAR STR (1000PSI)	HARDNESS (BRINELL)
			EXTRUDED TUBES					
AZ31B-F and AZ31C-F		0.050-0.500	Not applicable	32	16	8	--	46
AZ61A-F		0.050-0.500	Not applicable	28	--	2	--	42
MIA-F		0.050-0.500	Not applicable	40	28	5	--	75
ZK60A-F ZK60A-T5		0.050-0.250 0.050-0.250	Not applicable Not applicable	46 46	38 38	5 4	-- --	75 82
			DIE FORGINGS					
AZ31B-F				34	19	6	17	55
AZ61A-F				38	22	6	19	55
AZ80A-F				42	26	5	20	69
AZ80A-T5				42	28	2	20	72
T6				50 (typ)	34 (typ)	5 (typ)	--	72
MIA IA54A-F ZK60A-T5				30 36 42	18 22 26	3 7 7	14 -- --	47 -- --

NOTE: This alloy contains radioactive elements. See paragraph 4-15 for precautions.

Table 4-5. Mechanical Properties Magnesium Alloy Sheet and Plate at Room Temperature - Typical

ALLOY & COND	DIMENSION THICKNESS (INCHES)	MINIMUM** TENSILE STRENGTH (1000PSI)	MINIMUM** TENSILE YIELD STR (1000PSI)	MIN ELON-GATION (2″--%)	MINIMUM SHEAR STRENGTH (1000PSI)	HARDNESS (BRINELL)	USE
AZ31B-F	All gauges	35 (typical)	19 (typical)	12 (typical)	--	--	Tooling Plate
AZ31B-H10	0.251-2.000	30	12	10	--	--	Standard Plate
-H11	0.016-0.250	32	12	12	--	--	Standard Plate and Sheet
-H23	0.016-0.064	39	25	4	--	--	Standard Sheet
	0.065-0.064	39	25	4	--	--	and Plate
-H24	0.016-0.063	39	29	4	18	73	Spec Sheet and Plate
	0.065-0.250	39	29	4	18	73	Same
	0.251-0.500	37	24	10	--	--	Same
	0.501-1.000	37	22	10	--	--	Same
-H26	0.501-0.750	37	25	8	--	--	Spec Sheet and Plate
	0.751-1.000	37	23	8	--	--	
	1.001-1.500	35	22	8	--	--	
-0	0.016-0.060	32	18	12	17	56	Spec Sheet and Plate
	0.061-0.250	32	15	12	17	56	Same
	0.251-0.500	32	15	12	--	--	Same
	0.501-2.000	30	15	10	--	--	Same
AZ31C-F	All gauges	32	15	8	--	52	Tread plate
HK31A-0*	0.016-0.250	30	16	12	--	--	Sheet
	0.251-0.500	30	16	12	--	--	Sheet
	0.501-1.000	30	15	12	--	--	Sheet
	1.001-3.000	29	14	12	--	--	Sheet
-H24*	0.016-0.125	34	26	4	21 (typ)	57	Sheet
	0.126-0.250	31	22	4	21 (typ)	57	Sheet
	0.251-1.000	34	25	4	20 (typ)	--	Sheet
	1.001-3.000	33	25	4	20 (typ)	--	Sheet
HM21A-T8	0.016-0.250	31	18	4			Sheet and Plate
	0.251-0.500	32	21	6			Sheet and Plate
	0.501-1.000	30	19	6			Sheet and Plate
	1.001-2.000	29	18	6			Sheet and Plate
MIA-O	All Gauges	33 (typ)	18 (typ)	17 (typ)	17 (typ)	48	Sheet and Plate
H	All gauges	35 (typ)	26 (typ)	7 (typ)	7 (typ)	54	
ZE10-0	0.016-0.060	30	18	15			Sheet and Plate
	0.061-0.250	30	15	15			
	0.251-0.500	29	12	12			
H24	0.016-0.125	36	25	4			Sheet and Plate
	0.126-0.188	34	22	4			
	0.189-0.250	31	20	4			

* Contains radioactive thorium element. See paragraph 4-19 for precautionary data.

** Values given are all minimum unless otherwise noted beside value.

Table 4-6. Mechanical Properties of Magnesium Alloy Castings at Room Temperatures

ALLOY & COND	TENSILE STRENGTH (1000 PSI) TYPE	TENSILE STRENGTH (1000 PSI) MIN	TENSILE STRENGTH YIELD (1000 PSI) TYPE	TENSILE STRENGTH YIELD (1000 PSI) MIN	TYPICAL ELONGATION IN 2″--% TYPE	TYPICAL ELONGATION IN 2″--% MIN	SHEAR STRENGTH (1000 PSI)	HARDNESS (Brinell)
AM100A-F	22	20	12	10	2	--	18	54
-T4	40	34	13	10	10	6	20	52
-T6	40	34	16	15	4	2	21	69
-T61	40	34	22	17	1	--	21	69
AZ63A-F	29	24	14	10	6	4	16	50
-T4	40	34	14	10	12	7	17	55
-T5	30	24	16	10	4	2	17	55
-T6	40	34	19	16	5	3	19	73
AZ81A-T4	40	34	14	10	12	7	17	55
AZ91C-F	24	18	14	10	2.5	--	16	52
-T4	40	34	14	10	11	7	17	55
-T5	23	23	12	12	2	--	--	--
-T6	40	34	19	16	5	3	19	73
AZ92A-F	24	20	14	10	2	1	16	65
-T4	40	34	14	10	10	6	17	63
-T5	26	20	17	11	1	--	16	80
-T6	40	34	21	18	2	1	20	84
EK30A-T6	23	20	16	14	3	2	18	45
EK41A-T5	23	20	16	14	1	--	18.7	45
-T6	25	22	18	16	3	1	19.4	50
EZ33A-T5	23	20	15	14	3	2	19.8	50
HK31A-T6*	30	27	15	13	8	4	21	55
HZ32A-T5*	29	27	14	13	7	4	20	57
KIA-F	24	24	6	6	14	14	--	--
QE22A-T6	35	35	25	25	2	2	--	--
ZE41A-T5	28	28	19	19	2.5	2.5	23	62
ZH42-T51*	32.5	--	21.6	--	4.5	--	--	--
ZH42-T4*	33.6	35	--	--	12	--	--	--
ZH62A-T5	35.0	35	22	22	4	5	24	70
ZK51A-T5	40	34	24	20	8	5	22	65
ZK61A-T6	39	39	26	26	5	5	26	68
DIE CASTINGS								
AZ91A-F	33	--	22	--	3	--	20	67
AZ91B-F	33	--	22	--	3	--	20	67

NOTE: *This alloy contains radioactive thorium element. See paragraph 4-19 precautionary instructions.

Table 4-7. Physical Properties Magnesium Alloy @68°F

ALLOY & COND	SPECIFIC GRAVITY	DENSITY LBS/CU in	MELTING RANGE°F	ELECTRICAL CONDUCTIVITY (IACS)
AM100A-F	1.81	0.065	867-1101	11.5
-T4	1.81	0.065	867-1101	9.9
-T6	1.81	0.065	867-1101	12.3
AZ31B and AZ31C	1.77	0.064	1116-1169	18.5
AZ61A	1.80	0.065	977-1145	11.6
AZ63A-F	1.82	0.066	850-1130	15.0
-T4	1.82	0.066	850-1130	12.3
-T6	1.82	0.066	850-1130	13.8
AZ80A	1.80	0.065	914-1130	10.6
AZ81A	1.81	0.065	914-1132	12.0
AZ91A-AZ91B	1.81	0.065	875-1105	10.1
AZ91C-F	1.81	0.065	875-1105	11.5
-T4	1.81	0.065	875-1105	9.9
-T6	1.81	0.065	875-1105	11.2
AZ92A-AC	1.83	0.066	830-1100	12.3
-T4	1.83	0.066	830-1100	10.5
-T6	1.83	0.066	830-1100	12.3
EK30A	1.79	0.065	1100-1184	27.0
EK41A-T5	1.81	0.065	1193	24.0
-T6	1.81	0.065	1193	26.0
EZ33A	1.83	0.066	1010-1189	25.0
HK31A-T6	1.79	0.065	1092-1204	22.0
HM21A	1.77	0.064	1100-1195	
HM-31A-F	1.80	0.065	1121-1202	26.0
HM32A	1.83	0.066	1026-1198	26.5
MI-A	1.76	0.064	1200	34.5
TA54A	1.87	0.067	--	--
ZE10A	1.76	0.063	1100-1200	--
ZH42	1.86	0.067	1180	23.9
ZH62A	1.86	0.067	1180	26.5
ZK21A	1.80	0.645	--	--
ZK51A	1.81	0.066	1020-1185	28.0
ZK60A-F	1.83	0.066	968-1175	29.0
-T5	1.83	0.066	968-1175	30.0
ZK60B	1.83	0.066	968-1175	31.0
ZK61A	1.80	0.065	1145	--

NOTE: Percentage conductivity of annealed copper at 68°F (international annealed copper standard).

c. Machine the metal dry whenever possible, avoiding fine feeds and keeping speeds below 500 - 700 surface feet per minute during turning and boring. If a coolant is definitely required use a mineral oil.

d. Keep work areas clean.

e. Store magnesium chips in clean, plainly labeled, covered, non-combustible containers where they will remain dry. Do not allow chips to accumulate on machines or operator's clothing. Machinists should not wear textured or fuzzy clothing and chips and sawdust should not be allowed to accumulate in cuffs or pockets.

f. Do not permit tools to rub on the work after a cut has been made.

g. Keep an adequate supply of a recommended magnesium fire extinguisher within reach of the operators. If chips should become ignited, extinguish them as follows:

WARNING

Water or any of the common liquid or foam type extinguishers will intensify a magnesium chip fire and may cause an explosion and shall not be used.

(1) Cover with a layer of G-1 or Met-L-X powder. Clean, dry unrusted cast iron chips, graphite powder, clean dry sand, talc and pitch may also be used.

(2) Actively burning fires on combustible surfaces should be covered with a 1/2 inch layer or more of extinguishing powder; then the entire mass shoveled into an iron container or onto a piece of iron plate. Alternately, a one or two inch layer of powder can be spread on the floor or surface nearby and the burning metal transferred to it, then add more powder as required.

(3) High cutting speeds, extremely fine feeds, dull, chipped or improperly designed tools, tool dwell on work after feed is stopped, tool rub, or tool hitting a steel or iron insert increase the chances of chip ignition. Keeping the cutting speed below 700 feet per minute will greatly reduce the fire possibilities even with a dull or poorly designed tool and fine feeds.

4-22. GRINDING AND POLISHING SAFETY PRACTICES. During grinding and polishing operations a proper dust collection system must be used. Figure 4-1 illustrates acceptable type collectors. The dust produced during grinding and polishing of magnesium must be removed immediately from the working area with a properly designed wet type dust collection system. Proper systems precipitate the magnesium dust by a heavy spray of water and must be so designed that dust or sludge cannot accumulate and dry out to a flammable state. Small collectors as shown in Figure 4-1, detail A serving one or two grinders are the best. The grinder-to-collector ducts should be short and straight. The self opening vents illustrated prevent hydrogen collection during shut down. The grinder's power supply, air exhaust blower and liquid level controller should be electrically water connected so cessation or failure of the dust collector operation will shut the grinder off. In addition a suitable devise should be installed in the system that will insure the collector system is in full operation and has changed the air in the ducts, etc., several times before the grinder begins running. Dry type filter collectors or central collector systems which carry the dust through long dry ducts should not be used for magnesium. The collector portrayed in Figure 4-1, detail B is used with booth type portable grinding and polishing where the dust passes through the grate with the air being circulated into a liquid spray which removes the dust. Design the booth to catch all the dust possible. On individual grinders for small scale work, as shown in Figure 4-1, detail C, the hood design and the oil pan combine to afford a satisfactory dust collection. Any dust escaping the hood should be kept swept up and properly disposed of.

4-23. The following specific safety rules pertain to the grinding and polishing of magnesium:

a. Magnesium grinding should be done on equipment set aside and labeled for that purpose. Do not grind sparking material on these grinders unless the magnesium dust has been completely removed from the equipment system. In addition, the grinding wheel or belt must be replaced prior to grinding of any other metal.

b. If chrome pickled magnesium is to be ground, sparks may result. Therefore, dust and air-dust mixtures must not be allowed to accumulate within spark range.

c. Maintain adequate supplies of plainly labeled approved fire extinguishing powder and suitable dispensing tools readily available to operators. Fire control is the same as detailed in paragraph 4-21 for machine chips.

d. Keep dust from accumulating on surrounding floors, benches, windows, etc. If such accumulation is evident the collector system is not operating properly and must be checked and repaired. Periodically and no less than once a month, completely clean the entire collector systems. Inspect and clean the grinder to collector ducts daily or move frequently if the volume of collection is high.

e. Dispose of grinding sludge as soon as it is removed from the equipment. Do not store or allow to even partially dry since it is extremely flammable. This may be done by spreading it on a layer of fire brick or hard burned paving brick to a maximum depth of 3″ to 4″, then placing a combustible material on top of it and burning the entire lot. The sludge will burn with intense heat, therefore, a safe location must be used. A method of rendering magnesium sludge chemically inactive and non-combustible by reacting it with a 5% solution of ferrous chloride ($Fe\ C1_2 2H_2O$) is detailed in the National Fire Protection Association's Bulletin No. 48, Standards for Magnesium.

f. The clothing of operators should be smooth and fire retardant without pockets and cuffs. Caps should be worn. All clothing should be easy to remove and kept free of dust accumulations.

4-24. Deleted.

4-25. HEAT TREATING SAFETY PRACTICES. Heat treating of magnesium alloys requires the exercising of certain definite rules, if safe and good quality workmanship is to result. The following rules should be closely followed:

a. Use furnace equipment having two sets of temperature controls, operating independently of each other.

b. Standardize checking procedures and adjustments of all equipment and of operating cycles.

c. Load the furnace with castings of one identical alloy only. Insure the castings are clean.

d. Use SO_2 (Sulfur Dioxide) atmosphere to control oxidation.

e. Use the recommended time and temperature operating ranges at all times.

f. Provide approved fire extinguishing equipment.

WARNING

Water and other extinguishers for Class A, B, and C fires shall not be used.

4-26. If a fire should occur for any reason, as evidenced by excessive furnace temperature and omission of a light colored smoke, proceed as follows:

a. Shut off all power, fuel and SO_2 feed lines to the furnace.

b. Notify fire marshal control crew at once.

c. Begin fire extinguishing procedures using one of the following methods:

(1) G-1 Powder Method.

Where it can be safely done, a small fire should be removed from the furnace, dumped into an iron container and then extinguished by covering with G-1 powder which is a graphite base powder of the Pyrene CO_2 Company. Metal Fyr Powder of the Fyr Fyter Company is the same material. In large furnaces or with fires of high intensity, the powder can be applied to the burning parts with a shovel (assuming the furnace door can be opened safely). Paper bags filled with the powder can be used if the fire is so located that such bags can be thrown in effectively. Remove parts not burning with long handled hooks. After all burning parts have been covered with the powder, the furnace load should be allowed to cool with the door open. For the handling of large quantities of G-1 powder, pumps have been constructed which can throw 75-100 lbs/minute onto the fire through a 30 foot hose and nozzle.

(2) Boron Trifluoride (BF_3) Gas Method.

WARNING

Boron trifluoride vapor or gas is toxic in the proportion of more than 1 part per million by volume of air when exposures are prolonged or frequently repeated. Five parts per million by volume of air or more are usually present in visible clouds of material resulting from the release of the gas to atmosphere. Therefore, personnel must not enter such clouds or any area where there is reason to believe the safe level is exceeded unless wearing a gas mask with an acid gas canister containing a dust filler. Analysis of atmosphere in the worker's breathing zone will be accomplished to assure personnel safety.

This is an effective gaseous means of extinguishing magnesium fires in heat treating furnaces. The gas is introduced into the furnace from a storage cylinder through an entry port preferably located near floor level. Connect the gas feed line to this port, open the feed line valve to provide about 2 lbs/minute (depending on furnace size and number of gas cylinders) and maintain gas flow until furnace temperature drops to 700°F indicating the fire is out. The furnace door should be kept closed during this action and until a definite temperature drop below 700°F is evident. Running the furnace circulating fans for about 1 minute after the gas is first introduced will assist in gas dispersal, then shut the fan off. The gas cylinder used should be fitted with a Monel needle valve and a "tee" for attaching a 0-160 psi pressure gauge. A suitable gas transfer system uses a 5/16″ flexible bronze hose to carry the gas to the furnace where it enters through a 1/4″ steel pipe entry port. Using 10 feet of hose and feed of pipe, a gauge pressure of 15-30 psi will deliver 1-2 lbs of BF_3 per minute. The cylinders may be permanently connected or brought to the furnace, when needed, on a suitable dolly. This gas does not require heating in order to flow. The cylinders should be weight checked for contents every 6 months.

(3) Boron Trichloride (BCL_3) Gaseous Method. This material has been successfully used to extinguish magnesium heat treat furnace fires. However, there are several factors involved with its use which makes it less preferred than boron trifluoride, these include: ten times more concentration than the 0.04% of boron trifluoride, the gas must be heated to flow freely; it is more expensive than trifluoride; the liquid is corrosive and the fumes irritating with a health hazard similar to hydrochloric acid fumes. Workmen should not occupy areas where noticeable vapors are present unless wearing a gas mask with an acid gas canister containing a dust filter. If this agent must be used, the liquid containing cylinders should be heated with infrared lights to provide the heat necessary to insure adequate gas flow. The cylinder outlet should be fitted with a special valve and gauge to control gas flow. Flexible 5/8″ ID neoprene hose may be used to connect the cylinder to a steel pipe for insertion into the furnace port. Otherwise its use in extinguishing a furnace fire is similar to the procedures for boron trifluoride.

4-27. IDENTIFICATION OF ALLOY.

4-28. Positive identification of an alloy, from a constituency standpoint, can only be determined by laboratory analysis. However, whether a light metal is magnesium or not can be generally determined by a simple test consisting of placing the test metal in contact with an 0.5% solution of silver nitrate, and observing the reaction for 1 minute. The solution is made by dissolving 0.5g. of silver nitrate in 100 ml. of water. Formation of a black deposit of metallic silver on the metal indicates magnesium or high-magnesium alloy. Then immerse the metal in a chrome pickle chemical solution, Type I Specification MIL-M-3171 (Commercially known as DOW No. 1). The solution should be freshly prepared and the test operator familiar with the colors of chemical treatment. If the metal assumes a very bright brassy coating, it indicates it is aluminum free alloy. If a greyish iridescent coating forms the alloy contains aluminum. The solution is made in the proportions of 24 ounces sodium dichromate and 24 fluid ounces concentrated nitric acid to enough water to make one gallon. Prior to the test the metal should be thoroughly cleaned down to the base metal, if necessary, by grinding or filing a clean area on the surface.

4-29. HEAT TREATING MAGNESIUM ALLOYS - GENERAL.

NOTE

- SAE-AMS-M-6857, Heat Treatment of Magnesium Alloy Castings, will be the control for heat treatment of magnesium alloy castings used on aerospace equipment. For complete description of magnesium alloy castings heat treat requirements, refer to latest issue of SAE-AMS-M-6857.
- Additional Heat Treatment information is discussed in Section IX.

4-30. PRECAUTIONS DURING HEATING. Of first importance in the heat processing of these alloys is a clear understanding of the characteristics of the metal relative to heat. Pure magnesium will melt at approximately 1202°F. The alloys melting points range from 830°F to 1204°F, approximately, according to their element constituency. Therefore, during any heating of alloy items, specified temperature maximums must be closely adhered to, particularly during solution heat treating. The metal is easily burned and overheating will also cause formation of molten pools within it, either condition resulting in ruining of the metal. Certain alloys such as AZ63A Type 1, or AZ92A Type 1, are subject to eutectic melting of some of its elements if heated too rapidly. They must be brought up to heat treating temperature slowly enough to prevent this. In the case of these two

examples, no less than two hours should be consumed in bringing them from 640°F to treating temperature.

4-31. An additional and no less important characteristic of the metal relative to heat treatment, is that it is subject to excessive surface oxidation at 750°F and higher temperatures. In an oxidizing atmosphere, this characteristic can result in ignition and fierce burning. To prevent such occurrences, a protective atmosphere containing sufficient sulphur dioxide, carbon dioxide or other satisfactory oxidation inhibitor shall be used when heating to 750°F and over. When oxidation inhibitors are used, their concentration percentage in the furnace atmosphere should be periodically checked for correct amounts. The particular requirements for various alloys are detailed in paragraph 4-46 in this section. These requirements and those of other pertinent specifications and instructions should be consulted and strictly adhered to in processing the metal. The safety measures defined in paragraph 4-1 must be rigidly practiced.

4-32. HEAT TREATING EQUIPMENT.

4-33. Furnaces used for solution heat treatment shall be of the air chamber type with forced air circulation. Heating provisions can be gas, electricity or oil. Their design must be such as to make impossible, direct heating element radiation or flame impingement on the articles being treated. The furnaces shall be installed with the necessary control, temperature measuring and recording instrument equipment to assure complete and accurate control. The temperature control shall be capable of maintaining a given temperature to within ± 10° F at any point in the working zone, after the charge has been brought up to this temperature. Each furnace used shall be equipped with a separate manual reset safety cut-out which will turn off the heat source in the event of any malfunction or failure of the regular automatic controls. The safety cut-outs shall be set as close as practicable above the maximum solution heat treating temperature for the alloy being treated. This will be above the variation expected but shall not be more than 10°F above the maximum heat treat temperature of the alloy being processed. There shall also be protective devices to shut off the heat source in case of circulation air stoppage. These devices shall be interconnected with a manual reset control.

4-34. Upon initial furnace installation and after any maintenance on the furnace or its equipment which might affect its operational characteristics, a temperature survey shall be made to test its capability of maintaining the minimum and maximum temperatures required for the various treatments it will be used for. A minimum of 9 test locations within the furnace load area should be checked. One in each corner, one in the center and one for each 25 cubic feet of furnace volume up to the maximum of 400 cubic feet. A monthly survey should be made after the initial survey, unless separate load thermocouples are employed, to record actual metal temperatures. The monthly survey should consist of one test for a solution heat treat temperature and one test for a precipitation heat treat temperature, one for each 40 cubic feet of heat treating volume with a minimum, of 9 test locations required regardless of the volume. In addition, a periodic survey should be made, using the test criteria of the initial survey. For all surveys, the furnaces should be allowed to heat to a point stabilization before taking any readings. The temperature of all test locations should be determined at 5 to 10 minute intervals after insertion of the temperature sensing elements in the furnace. The maximum temperature variation of all elements shall not exceed 20°F and shall not exceed the solution or precipitation heat treating range at any time after equilibrium is reached.

4-35. Furnace control temperature measuring instruments shall not be used as test instruments during any survey. The thermocouple and sensing elements should be replaced periodically because of the in-service incurred effects of oxidation and deterioration.

4-36. Pyrometers used with the automatic control system to indicate, maintain and record the furnace temperatures, should preferably be of the potentiometer type.

4-37. Suitable jigs, fixtures, trays, hangers, racks, ventilators and other equipment shall be used in processing the articles.

4-38. HEAT TREATMENT SOLUTION. Solution for heat treating of magnesium alloyed articles is accomplished by heating at an elevated temperature in an air furnace for a specific length of time (holding period); during which certain alloying elements enter into uniform solid solution, since the alloys tend to become plastic at high heat treat temperatures, it is mandatory that suitable support be provided for articles being processed to prevent warping. Table 4-8 below lists the recommended soaking and holding time for solution heat treating alloys. The holding periods given are for castings up to 2 inches thick. Items thicker than 2 inches will require longer periods.

4-39. AZ92A (Type 2), AZ91C and QE22A sand castings and AM100A permanent mold castings

may be charged into the furnace which is at the heat treating temperature. Since magnesium castings are subject to excessive surface oxidation at temperatures of 750°F and over, a protective atmosphere containing sufficient sulphur dioxide, carbon dioxide or other satisfactory oxidation inhibitor shall be used when solution heat treating at 750°F and over. The whole casting must be heat treated, not just part of it.

4-40. Precipitation heat treatment or artificial aging of alloys is accomplished at temperature lower than those of the solution treatment. Suggested aging treatments for various alloys are as cited in Table 4-9.

4-41. Stabilization heat treating an alloy increases its creep strength and retards growth at service encountered elevated temperatures. The same general procedure of heating to temperature, holding for a time and cooling to room temperature is used as in the other two types, only the temperature and time elements are different. When applied to a solution treat treated alloy, it increases the alloy's yield strength. Actually stabilization treatment is a high temperature aging treatment accomplished quickly rather than allowing an alloy to age naturally over a period of time.

Table 4-8. Solution Heat Treating Temperatures and Holding Times

ALLOY	TEMPERATURE RANGE	TIME PERIOD(HRS)	MAX TEMP °F
AM100A	790-800	16-24	810
AZ63A (Type 1)	720-730 (F to T4)	10-14	734
AZ63A (Type 2)*	720-740 (F to T4)	10-14	745
AZ81A	770-785	16-24	785
AZ91C	770-785	16-24	785
AZ92A (Type 1)	760-770	16-24	775
AZ92A (Type 2)	775-785	14-22	785
HK31A	1045-1055	2	1060
QE22A**	970-990	4-8	1000
ZK61A	925-935	2	935
	or 895-905	10	935

* Contains calcium.

** Quench in 150°F water bath within 30 seconds after opening of furnace.

4-42. Annealing of magnesium alloys is accomplished to relieve internal stresses, generally resulting from forming operations; soften the material for forming; improve the ductility; and/or refine the grain structure. The alloy is heated to the proper temperature, soaked or held at that temperature for a specified time and cooled to room temperature. The desired effects are gained by controlling the temperature, hold time and cooling medium exposure. Avoid excessive time at temperature to prevent unwanted grain growth. Conversely, no attempt should be made to shorten the time at temperature and over all annealing time by increasing the temperature, since elements of the alloy subject to melting points lower then the alloy itself can go into solution.

4-43. HEAT TREATING PROCEDURES. Placing of articles to be treated in the furnace, (generally referred to as charging the furnace), should not be done in a haphazard fashion. Individual pieces should be racked or supported to prevent distorting without interfering with the free flow of the heated atmosphere around the article. Distortion or warping can occur due to the semi-plastic qualities of the alloys at the furnace elevated temperatures during solution heat treat. Distortion is not a particular problem during precipitation or stabilization treatment or annealing. However, it is good practice to handle magnesium alloy articles with care at all times under elevated heat conditions. In the case of complicated formed parts, it may be necessary to utilize a specially contoured

jig or fixture to adequately protect the design contour of the item at high temperatures.

4-44. Cooling after treating is accomplished in either still or blast air, depending upon the alloy. The one exception is alloy QE22A which is water quenched. The water should be at 150°F temperature.

4-45. ALLOY GENERAL CHARACTERISTIC INFORMATION.

4-46. In the following paragraphs are brief summaries of the general characteristics of the various alloys.

a. AM100-A - Used in pressure tight sand end permanent mold castings with good combination of tensile strength, yield strength and elongation. Solution heat treat in 0.5% SO_2 atmosphere 20 hours at 790°F; cool in strong air blast. Partially artificial aging -12 hours at 325°F; cool in still air. Completely artificial age 5 hours at 450°F; cool in still air or oven. Aging increases basic yield strength and hardness and decreases toughness and elongation.

Table 4-9. Artificial Aging (Precipitation Treatment)

ALLOY & TEMPER	AGING TREATMENT
AM100A-T6	5 hours at 450°F or 24 hours at 400°F
AM100A-T5*	5 hours at 450°F
AZ63A-T6	5 hours at 425°F or 5 hours at 450°F
AZ63A-T5*	4 hours at 500°F or 5 hours at 450°F
AZ91C-T6	16 hours at 335°F or 4 hours at 420°F
AZ92A-T6 (Type 1)	4 hours at 500°F or 5 hours at 425°F
AZ92A-T6 (Type 2)	5 hours at 450°F or 16 hours at 400°F or 20 hours at 350°F
AZ92A-T5* (Type 2)	5 hours at 450°F
EZ33A-T5*	2 hours at 650°F or 5 hours at 420°F or 5 hours at 420°F
HK31A-T6	16 hours at 400°F
HZ32A-T5*	16 hours at 600°F
QE22A-T6	8 hours at 400°F
ZH62A-T5*	2 hours at 625°F or 16 hours at 350°F
ZK51A-T5*	8 hours at 424°F or 12 hours at 350°F
ZK61A-T5*	48 hours at 300°F
ZK61A-T6	48 hours at 265°F

*T5 is aged from as-cast condition. Others are aged from T4 condition.

b. AZ31B and C - Used in low cost extruded bars, rods, shapes, structural sections and tubing with moderate mechanical properties and high elongation sheet and plate; good formability and strength, high resistance to corrosion, good weldability. Liquid temperature 1170°F; solid 1120°F. Hot working temperature is 450 - 800°F. Annealing temperature 650°F. Stress relief of extrusions and annealed sheet = 500°F for 15 minutes; hard rolled sheet = 300°F for 60 minutes. Foreign equivalents are: British DTD 120A Sheet, 1351350 forgings; German and Italian, Electron AZ31; French - SOC Gen Air Magnesium, F3 and T8.

c. AZ61A - Use in general purpose extrusions with good properties, intermediate cost; press forgings with good mechanical properties. Rarely used in sheet form. Hot working temperature 350°-750°F; shortness temperature above 780°F. Anneal

650°F. Heat treat annealed sheet extrusions and forgings 15 minutes at 500°F rolled sheet 400°F for 15 minutes. Foreign equivalents are British BS 1351 (forgings) BS 1354 (extrusions); German AZM.

d. AZ63A - Used in sand castings for good strength properties with best ductility and toughness. Solution heat treat at 740°F in a 0.5%-SO_2atmosphere for 10 hours then cool in air. Aging is done at 450°F for 5 hours and cooled in air or furnace. Stabilize at 300°F at 4 hours and cool in air. Foreign equivalents are Elektron AZG, British DTD59A(as cast)and DTD-289 (heat treated). Good salt water anti-corrosion properties.

e. AZ80A - Used for extruded and press forged products. Heat treatable. Hot working temperature 600-750°F. Shortness temperature above 775°F, annealing temperature 725°F. Stress relief: as extruded, 500°F for 15 minutes, extruded and artificially aged 400°F for 60 minutes; forgings 500° F for 15 minutes. Foreign equivalents are British 1351 (forgings); German AZ855 Helium or Argon-arc weldable using AZ92A welding rod or may be resistance welded. Stress relieve after welding.

Table 4-10. Deleted.

Table 4-11. Deleted.

f. AZ81A - Used in sand or permanent mold castings for good strength, excellent ductility, pressure tightness and toughness. Readily castable with low micro-shrinkage tendency. Solution heat treat 775°F for 18 hours, cool in air or by fan. Stabilizing treatment 500°F, 4 hours and air cool. To prevent germination (grain growth) an alternate heat treat of 775°F for 6 hours, 2 hours at 665°F and 10 hours at 775°F may be used.

g. AZ91A, AZ91B - AZ91A - used for die castings generally.

h. AZ91C - AZ91B - is also die cast alloy but has higher impurity content. AZ91C is used for pressure tight sand and permanent mold castings having high tensile and weld strength. Shortness temperatures are above 750°F. Heat treat: T-4 condition, 16 hours at 780°F, cool in air blast and then age at 400°F for 4 hours; T-7 condition, 5 hours at 450°F. Foreign equivalents are Elektron AZ91 and British DTD136A. Good impact resistance in T-4 temper. T-6 has good yield strength and, ductility.

i. AZ92A - Used in pressure tight sand and permanent mold castings. Has high tensile and yield strengths. Solution heat treat 20 hours at 760°F in an atmosphere of 0.5% SO_2. Cool in strong air blast. Artificial aging is done at 420°F for 14 hours. Cool in air or oven. Stabilize for 4 hours at 500°F, then cool in air. Equal to AX63A in salt water corrosion resistance.

j. EK30A - Used in sand casting for elevated temperature applications. Has good strength properties in temperature range 300°- 500°F. Solution heat treat at 1060°F maximum 16 hours then cool in air by fan. Age at 400°F then air cool.

k. EK41A - Used as pressure tight sand casting alloy. Good strength at 300° - 500°F. Solution heat treat at 1060°F maximum 16 hours then cool in air or with fan. Age at 400°F 16 hours, air cool.

l. EZ33A - Used for pressure tight, good strength sand and permanent mold castings where temperatures may reach 500°F in use. Age at 420°F for 5 hours. Forgeign equivalent British ZRE1.

m. HK31A - Used in sand castings for elevated temperature use up to 650°F and sheet and plate applications. Has excellent weld and forming characteristics in sheet/plate form and retains good strength up to 650°F. Hot working temperature is 800° to 1050°F. Anneal at 750°F. Solution heat treat sand castings by loading into a 1050°F furnace and holding for 2 hours, then fan or air cool. Age for 16 hours at 400°F. H23 sheet may be stress relieved after welding at 650°F for 1 hour or 675°F for 20 minutes. Sheet may be resistance welded.

n. HM21A - Used sheet, plate and forgings, usable at 650°F and above. Hot work at 850°F - 1100°F Anneal at 850°F. Heat treat forgings (T5)450°F for 16 hours. Resistance welding is also satisfactory.

o. HM31A - Used in extruded bars, rods, shapes and tubing for elevated temperature service. Exposure to temperatures through 600°F for periods of 1000 hours caused practically no change in short time room and elevated temperature properties. Superior modulus of elasticity particularly at elevated temperatures. Hot work at 700°F - 1000°F.

p. HZ32A - Used for sand castings. It is of properties for medium and long range exposure at temperatures above 500°F and is pressure tight.

q. KIQA - Casting alloy with comparatively low strength has excellent damping characteristics.

r. MIA - Used for wrought products and provides for moderate mechanical properties with excellent weldability, corrosion resistance and hot formability. Hot work at 560° - 1000°F. Anneal at 700°F. Stress relieve annealed sheet at 500°F, in 15 minutes; hard rolled sheet at 400°F in 60 minutes; and extrusions at 500°F in 15 minutes. Foreign equivalents are British BS1352 (forgings) and German AM503.

s. QE22A - Castings have high yield strength at elevated temperatures. Solution heat treat at 970°-990°F 4 to 8 hours. Quench in 150°F water bath.

t. TA54A - Best hammer forging alloy.

u. ZE10A - Used for low cost, moderate strength sheet and plate. No stress relief required after welding. Hot work at 500° - 900°F. Anneal 400°F. AZ61A or EX33A rod is preferred for welding.

v. ZE41A - A good strength, pressure tight, weldable alloy, where temperatures are below 200°F. Age 2 hours at 625°F, air cool; 16 hours at 350°F air cool. Foreign equivalent - British RZ5.

w. ZH42A - Used in sand castings for aircraft engines and airframe structures where high strength at room temperatures and moderate long-time creep resistance at temperatures up to 480°F are required. The alloy is a precipitation hardening one from the as-cast condition and requires no solution heat treatment. Maximum hardness is developed at 480°F in 24 hours. More ductility and better shock resistance may be obtained by overaging at temperatures such as 750°F. For T51 condition treat at 480°F for 24 hours; T4 condition 750°F for 24 hours.

x. ZH62A - Used as a high strength good ductility structural alloy at normal temperatures and has the highest yield strength of any alloy except ZK61A-T6. Heat treat at 480°F for 12 hours. Foreign equivalent is British T26.

y. ZK21A - An alloy of moderate strength for extrusion fabrication. Good weldability using shielded arc and AZ61A or AZ92A, rod. Resistance welding also satisfactory. ZK51A - Used for high yield strength, good ductility, sand castings. Heat treat for 12 hours at 350°F. Foreign equivalent is British Z52.

z. ZK60A - Used as a wrought alloy for extruded shapes and press forgings. Has high strength and good ductility characteristics. Hot work at 600°-750°F. Shortness temperature is 950°F. Age at 300°F for 24 hours, air cool. Foreign equivalent is German ZW6.

aa. ZK61A - Casting Alloy. Solution heat treat at 925° - 935°F for 2 hours or 895° - 905° F for 10 hours.

Paragraphs 4-47 through 4-51 deleted.

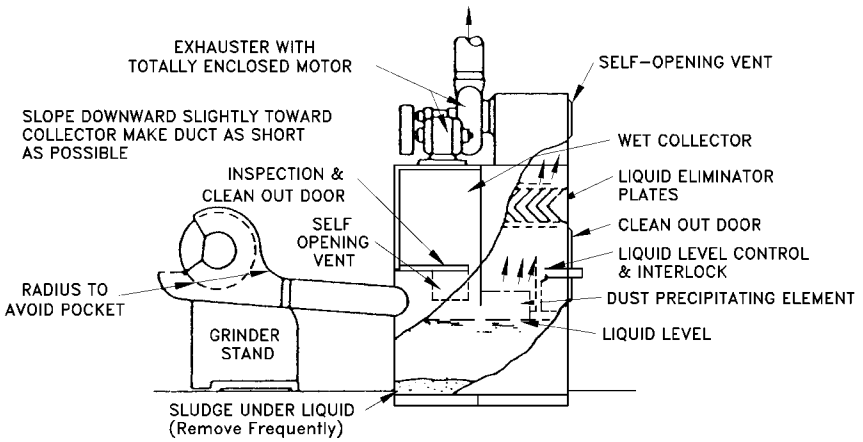

A Type of dust collector for use with grinding wheel stands.

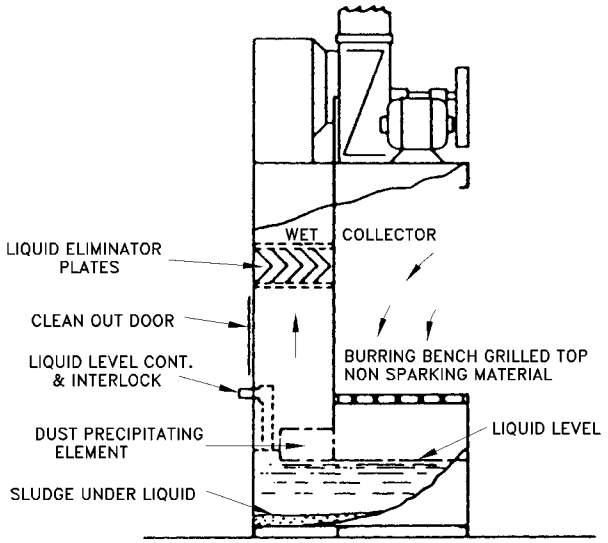

B Bench type dust collector for use with portable grinding or polishing tools.

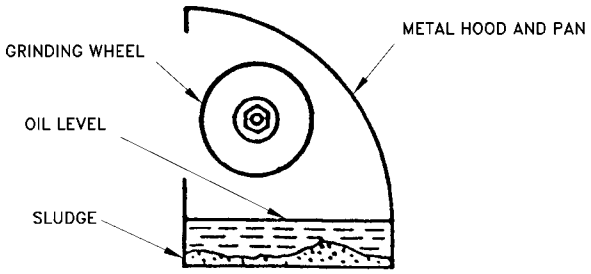

C Type of dust collector for small wheels used only intermittently and when small amounts of metal are removed.

L9805657

Figure 4-1. Typical Dust Collectors for Magnesium

Paragraphs 4-52 through 4-95 deleted.
Tables 4-12 through 4-31 deleted.
Figures 4-2 through 4-4 deleted.
Pages 4-23 through 4-43/(4-44 blank) deleted.

SECTION V

TITANIUM AND TITANIUM ALLOYS

5-1. CLASSIFICATION.

5-2. Titanium is produced in pure form as well as in various alloys. Pure titanium is commonly known as unalloyed. It can be cast, formed, joined, and machined with relative ease as compared to the various alloy grades. Unalloyed titanium cannot be heat treated. Therefore, its uses are limited to end items not requiring the higher strengths obtained from the heat treatable alloys.

5-3. Titanium is a very active metal, and readily dissolves carbon, oxygen, and nitrogen. The most pronounced effects are obtained from oxygen and nitrogen. For this reason, any heating process must be performed in a closely controlled atmosphere to prevent the absorption of oxygen and nitrogen to a point of brittleness.

5-4. GENERAL.

5-5. MILITARY AND COMMERCIAL DESIGNATIONS. There are presently two military specifications in existence (See Table 5-1) covering alloyed and unalloyed titanium in classes established to designate various chemical compositions. For the selection of the proper class and form of stock required for a particular purpose, reference will be made to Table 5-1.

5-6. PHYSICAL PROPERTIES. Limited physical properties are available on the titanium compositions covered by existing military specifications. Compared to other materials, the melting point of titanium is higher than that of any of the other construction materials currently in use. The density of titanium is intermediate to aluminum and steel. Electrical resistivities of titanium are similar to those of corrosion-resistant steel. The modulus of elasticity is somewhat more than half that of the alloy steels and the coefficient of expansion is less than half that of austenitic stainless steels.

5-7. MECHANICAL PROPERTIES. As previously pointed out, titanium is a very active metal and readily dissolves carbon, oxygen and nitrogen. All three elements tend to harden the metal; oxygen and nitrogen having the most pronounced effect.

5-8. The control of these elements causes considerable difficulty in obtaining correct mechanical properties during the fabrication of titanium. This variation in mechanical properties is the cause of difficulties encountered in the fabrication of parts, since the absorption of small amounts of oxygen or nitrogen makes vast changes in the characteristics of this metal during welding, heat treatment, or any application of heat in excess of 800°F.

5-9. Operations involving titanium requiring the application of heat in excess of 800°F must be performed in a closely controlled atmosphere by methods explained in future paragraphs. The nominal mechanical properties are listed in Table 5-2.

5-10. METHODS OF IDENTIFICATION. Methods of distinguishing titanium alloys from other metals are simple and definite. One quick method is to contact the titanium with a grinding wheel. This results in a pure white trace ending in a brilliant white burst. Also, identification can be accomplished by moistening the titanium and marking the surface with a piece of glass. This leaves a dark line similar in appearance to a pencil mark. Titanium is non-magnetic. To positively identify the various alloys, a chemical or spectographic analysis is necessary.

5-11. HARDNESS TESTING. Hardness is the resistance of a metal to plastic deformation by penetration, indentation, or scratching, and is usually a good indication of strength. This property can be measured accurately by the Brinell, Rockwell or Vickers Technique. The hardness to be expected from the various alloys and unalloyed titanium is listed in Table 5-2.

5-12. TENSILE TESTING. The useful strength of a metal is the maximum load which can be applied without permanent deformation. This factor is commonly called yield strength. The tensile strength of a metal is that load, in pounds per square inch, at which complete failure occurs. In the case of titanium the yield strength is the most important factor and is therefore used by industry to designate the various types of unalloyed titanium.

5-13. NON-DESTRUCTIVE TESTING. Titanium and titanium alloys are highly susceptible to stress risers resulting from scratching, nicking, and notching. For this reason, close visual inspection is required of all raw stock prior to any forming or machining operations. All scratches, nicks and notches must be removed, before fabrication, by sanding and polishing.

Table 5-1. Specification Cross Reference Titanium Alloys

Comp/Alloy Designation	Form/Commodity	Specification Data 1		
		AMS	Military	Other 2
	COMMERCIALLY PURE (UNALLOYED)			
40KS1 (A-40 55A) YIELD	SHEET, STRIP PLATE	4902	MIL-T-9046 Type I, COMP. A	A-40; HA1940; MST-40; RS-40; Ti-55A
	Tubing Welded	4941		A40; 55A
	Tubing Seamless	4942		
55KS1 (A55; 65A) Yield	Sheet, Strip Plate	4900	MIL-T-9046 Type I, COMP. C	A55; HA-1950; MST 55 RS55; T1-65A; NA2-7123B
	Forgings		MIL-F-83142 Comp. 1	
70KS1 (A70; 75A) Yield	Sheet Strip Plate	4901	MIL-T-9046 Type I, COMP. B	A70; HA-1970; MST70 RS70; Ti-75A, NA2-7126G
70KS1 (A70; 100A)	Bars, Forgings and Forging Stock	4921	MIL-T-9046 Type I, COMP. A	A70; HA-1970; MST70 RS70; Ti-75A
	ALPHA TITANIUM ALLOY			
5AL-2.5Sn (A110AT)	Sheet Strip, Plate	4910	MIL-T-9046 Type II, COMP. A	A-110AT; HA5137; 0.01 014; MST 5AL-2.5Sn; RS110C; T1-5AL-2.5Sn;NA2-71269
	Bars and Forgings	4926 4966	MIL-T-9047 Comp. 2	A-110AT; HA5137; MST 5AL-2.5Sn; RS110C; Ti-5AL-2.5Sn; NA2-7149A
5AL-2.5Sn EL1	Sheet Strip Plate	4909	MIL-T-9046 Type II, COMP. B	
	Bars and Forgings	4924	MIL-T-9047 Comp. 3	
5AL-SZr-5Sn	Sheet, Strip Plate		MIL-T-9046 Type II, COMP. C	
7AL-12Zr	Sheet, Strip Plate		MIL-T-9046 Type II, COMP. D	
7AL-2Cb-1Ta	Sheet, Strip Plate		MIL-T-9046 Type II, COMP. E	

Comp/Alloy Designation	Form/Commodity	Specification Data 1		
		AMS	Military	Other 2
8AL-1MO-IV	Sheet, Strip, Plate	4915 (Single ann'1)	MIL-T-9046 Type II, COMP. F	
	Bars and Forgings		MIL-T-9047 Comp. 5	
	Bars, Rings	4972		
	Forgings (Solution heat treated and stabilized)	4973		
	BETA TITANIUM ALLOYS			
13V-11Cr-3AL	Forgings		MIL-F-83142 Comp. 14	
	Bars and Forgings		MIL-T-9047 Comp. 12	
13.5V-11Cr-3AL (B120VCA)	Plate, Sheet and Strips Solution Heat Treated	4917		B-120VCA; MST 13V-11Cr-3AL; R120B; Ti-13V-11C4-3AL
11.5 Mo-6Zr-	Bars and Forgings		MIL-T-9047 Comp. 13	
	Bars and Wire (Solution Heat Treated)	4977		
8Mn (C110M)	Sheet, Strip Plate	4908	MIL-T-9046 Type III, COMP. A	C110M, MST 8Mn; RS110A; Ti-8Mn; 0.01002
	Forgings		MIL-T-83142 Comp. 12	
4AL-3Mo-IV	Sheet, Strip, Plate	4912	MIL-T-9046 Type III COMP. B	MST 4AL-3MO-IV; RS115; Ti-3AL 3MO-IV; LB-0170-104
	Sheet, Strip, Plate (Solution and Pretreated)	4913		
6AL-4V (C120AV)	Sheet, Strip, Plate	4911	MIL-T-9046 Type III, COMP. C	C-120AV; HA6510; MST 6AL-4V; RS120A; TI-6AL-4V; LB0170-110

Table 5-1. Specification Cross Reference Titanium Alloys - Continued

Comp/Alloy Designation	Form/Commodity	Specification Data 1		
		AMS	Military	Other 2
	Bars and Forgings	4928	MIL-T-9047 Comp. 6	C120AV; HA6510; MST-6AL-4V; RS120A; TI-6AL-4V; LB0170-110; 0.01037
	Bars and Forgings (Solution & Precipitation Heat Treated)	4965		
	Extrusions	4935		C120AV; HA6510; MST-6AL-4V; RS120A; Ti-6AL-4V; LB0170-147
	Wire, Welding	4954		C120AV
	Forgings		MIL-F-83142 COMP. 6	
6AL-4VEL1	Sheet, Strip, Plate		MIL-T-9046 Type III, COMP. D	
	Bars and Forgings	4930	MIL-T-9047 Comp. 7	
	Forgings		MIL-F-83142 Comp. F	
	Wire, Welding (Extra low intertital environment controlled)	4956		
6AL-6V-2Sn	Forgings		MIL-F-83142 Comp. 8	
	Sheet, Strip, Plate	4918	MIL-T-9046 Type III, COMP. E	
	Bars and Forg-ings	4973 (Ann'1) 4979 (H.T.)	MIL-T-9046 COMP. B	
	Forgings		MIL-T-83142 Comp. 9	
7AL-4Mo (C135MO)	Sheet, Strip, Plate		MIL-T-9046 Type III, COMP. F	C135MO; HA-7146; MST 7AL-4MO; RS 135; Ti-7AL-4MO; LB0170-122
	Bars and Forgings	4970 (H.T.)	MIL-T-9047 Comp. 9	

Table 5-1. Specification Cross Reference Titanium Alloys - Continued

Comp/Alloy Designation	Form/Commodity	Specification Data 1		
		AMS	Military	Other 2
7AL-4Mo (C135MO) (Cont)	Forgings		MIL-F-83142 Comp. 13	
6AL-2SN-4Zr-2Mo	Sheet, Strip, Plate		MIL-T-9046 Type III, COMP. G	
	Bars and Forgings	4979 (H.T.) 4976 (Ann'1)	MIL-T-9047 Comp. II	
6AL-2Sn-4Zr-6Mo	Bars and Forgings		MIL-T-9047 Comp. 14	
	MISCELLANEOUS SPECIFICATIONS			
Heat Treatment of Titanium and Titanium Alloys			SAE-AMS-H-81200	

1 There may be controlled requirements applicable to some specifications listed in the same alloy type or series. Validate any difference and assure that selected specification material(s) will comply with end item specification requirements before specifying or using.

2 The following manufactures names apply to designations listed under other:

a. For designation beginning with A, B, C (example - A-40) CRUCIBLE STEEL CO.

b. For designation beginning with HA (example HA-1940) HARVEY ALUMINUM CO.

c. For designation beginning with MST (example MST-70) REACTIVE METAL CORP.

d. For designation beginning with RS (example RS-40) REPUBLIC STEEL CO.

e. For designation beginning with T1 (example T1-8Mn) TITANIUM METAL CORP.

f. For designation beginning with LB or NA (example LB170-110 or NA2-7123B) NORTH AMERICAN AVIATION INC.

g. For designation beginning with 0.0 (example 0.01015) CONVAIR OR GENERAL DYNAMICS CORP.

5-14. FIRE DAMAGE. Fire damage to titanium and titanium alloys becomes critical above 1000°F due to the absorption of oxygen and nitrogen from the air which causes surface hardening to a point of brittleness. However, an overtemperatured condition is indicated by the formation of an oxide coating and can be easily detected by a light green to white color. If this indication is apparent following fire damage to titanium aircraft parts, the affected parts will be removed and replaced with serviceable parts.

5-15. HEAT TREATMENT - GENERAL.

NOTE

- SAE-AMS-H-81200, Heat Treatment of Titanium and Titanium Alloys, will be the control document for heat treatment of titanium and titanium alloys used on aerospace equipment. For complete description of titanium heat treat requirements, refer to latest issue of SAE-AMS-H-81200.
- Additional Heat Treatment information is discussed in Section IX.

5-16. A majority of the titanium alloys can be effectively heat treated to strengthen, anneal and stress relieve. The heating media for accomplishing the heat treatment can be air, combusted gases, protective atmosphere, inert atmosphere, or vacuum furnace. However, protective, inert atmospheres or vacuum shall be used as necessary to protect all parts (titanium or titanium alloy), etc., which comprise the furnace load to prevent reaction with the elements hydrogen, carbon, nitrogen and oxygen.

Table 5-2. Nominal Mechanical Properties at Room Temperature

MATERIAL TYPE	ANNEALED CONDITION				SOLUTION TREATED CONDITION				SOLUTION TREATED AND AGED		
	Yield Str (0.2% Off set) 1000 psi Min	Tensil Str (Ultimate min) 1000 psi	Elong % in 2 in	Rock well Hard-ness	Yield Str (0.2% Off set) 1000 psi Min	Tensil Str (Ultimate min) 1000 psi	Elong % in 2 in	Rock well Hard-ness	Yield Str	Tensil	Elong % in 2 in
MIL-T-9046 1/											
TYPE I, Comp A											
(Unalloyed 40 ksi)	40-65	50	20	B88							
Comp B											
(Unalloyed 70 ksi)	70-95	80	15	C23							
Comp C											
(Unalloyed 65 ksi)	55-80	65	18	B95							
TYPE II, Comp A (5AL-2.5SN)	110	120	10	C35							
Comp B (5AL-2.5SnE11)	95	100	8-10								
Comp C (5AL-5Zr-5Sn)	110	120	10	C35	Not recommended						
Comp D (7AL-23Zr)	120	130	10								
Comp E (7AL-2Cb-1Ta)	110	115	10	C35							
Comp F (8AL-1Mo-IV)	135	145	8-10	C38							
TYPE III, Comp A (8Mn)	110	120	10		Not recommended						
Comp B (4AL-3Mo-IV)	115	125	10		130		8		155	170	5.0
Comp C (6AL-4C)	120	130	8	C36	150	160	5		145	160	5.0
Comp D (6AL-4V-EL1)	120	130	10	C36							
Comp E (6AL-6V-2Sn)	140	150	10		160	170	10		160	170	8.0
Comp F (7AL-4Mo)	135	145	10	C38	160		10		160	170	8.0
TYPE IV, Comp A (13V-11Cr-3A1)	120	125	10		120	125	10		160	170	10.0
MIL-T-9047, Class 1 (Unalloyed)	70	80	15	C23							
Class 2 (5AL, 2.5Sn)	110	115-120	10	C36							
Class 3 (3AL, 5Cr)	130	140	10								
Class 4 (2Fe, 2Cr, 2Mo)	120	130	15	C36							
Class 5 (6AL, 4V)	120	130	8	C36	145	160	5		150	160	5.0
Class 6 (6AL, 4V)	130	140	10	C40	150	160	5		160	175	5.0
Class 7 (5AL, 1.5Fe, 15Cr, 1.5Mo)	135	145	10	C39							

NOTE 1/ Comp A, B and C are classified as commerically pure.

CAUTION

Cracked ammonia or hydrogen shall not be used as a protective atmosphere for titanium and titanium alloys in any heat treating operations.

5-17. Air-chamber furnaces are more flexible and economical for large volumes of work and for low temperature heat treatments; but at high temperatures where surface oxidation (above 1000°F) is significant, a muffle furnace utilizing external heating gives more protection, especially if gas heated. For general use, electric furnaces are preferred since heating can be accomplished internally or externally with a minimum of contamination. Furnaces which have given satisiactory results are vacuum furnaces capable of supplying pressures of one micron or less; and inert gas furnaces which control the atmosphere to 1% or less of oxygen and nitrogen combined.

NOTE

Avoid direct flame impengement to prevent severe localized oxidation and contamination. Also avoid contact with scale or dirt.

5-18. Alternately direct resistance heating may be used where extremely short heat up cycle on nearly finished parts is required to minimize surface oxidation.

5-19. The commercially pure, or unalloyed titanium, can only be hardened/strengthened by cold work. Stress relief and annealing are the only heat treatments applicable to these alloys. These processes of heat treatment are employed to remove residual stress resulting from grinding, work hardening, welding, etc. For recommended temperatures and times see Table 5-3.

5-20. The soaking period for heat treatment of titanium alloys shall be the minimum necesaary to develop the required mechanical properties. The minimum soaking period (when unknown) shall be determined by teat samples run prior to heat treating the finiahed material or part. Excessive heat treat soaking periods ahall be avoided to prevent diffusion of oxygen hydrogen and nitrogen. Oxygen and nitrogen diffusion will take the form of a hard brittle surface layer which is difficult to distinguish from the base metal. The brittle layer must be removed by mechanical or chemical means prior to forming or application in stressed components. For the recommended soaking periods and temperatures see Table 5-3.

5-21. Scaling (oxidation) of titanium and titanium alloys starts at about 900°F. Light scaling which forms from exposure to temperatures up to 1000°F has little or no detrimental effect on mechanical properties. Heating to temperatures above 1000°F under oxidizing conditions results in severe surface scaling as well as diffusion of oxygen.

5-22. HYDROGEN EMBRITTLEMENT. Hydrogen embrittlement is a major problem with titanium and titanium alloys. Hydrogen is readily absorbed from pickling, cleaning and scale removal solution at room temperature and from the atmosphere at elevated temperatures. Hydrogen embrittlement in the basically pure and alpha alloys is evident by a reduction in ductility and a slight increase in strength. This is associated with a decrease in impact strength at temperatures below 200°F and a shift in the temperature range where the change from ductile to brittle occurs. With alpha-beta alloys, embrittlement is found at slow speeds of testing and under constant or "sustained" loads as demonstrated by tests on notched specimens. This type of embrittlement, which is similar to the embrittlement of steel, only becomes evident above a certain strength level. Solution heat treating and aging the alpha-beta alloys to high strength levels increases sensitivity to hydrogen embrittlement.

5-23. Quenching from solution heat treating for temperature wrought titanium alloys, except for alloy 3AL-13V-11Cr less than 2 inches thick, which maybe air cooled, shall be by total immersion in water. The water shall be of sufficient volume or circulation or both so that the water temperature upon completion of the quenching operation will not be more than 100°F. The quenching baths shall be located and arranged to permit rapid transfer of the load from the furnace to the bath. Maximum quench delay for immersion-type quenching shall be 4 seconds for wrought alloys up to 0.091 nominal thickness and 7 seconds for 0.091 and over. Quench delay time begins when furnace doors begin to open and ends when the last corner of the load is immersed. With extremely large loads or long lengths quench delay may be exceeded if performance test indicates that all parts comply with specification requirements.

5-24. AGING AND STRESS RELIEVING. For aging, the material shall be held within temperature range for sufficient time, depending on section size, for the necessary aging to take place and to insure that specified properties are developed. Wrought alloys should be fully quenched by air cooling from the aging temperature. The same applies for stress relieving except the time at temperature will depend on section size plus amount of cold work hardening present in the material. The material is also quenched by air cooling from the stress relieving temperature.

NOTE

All heat treating operations shall be performed uniformly on the whole part, etc., never on a portion thereof.

Table 5-3. Heat Treat, Stress Relief and Annealing Temperatures and Times

MATERIAL	STRESS RELIEF TEMP °F	STRESS RELIEF TIME HOURS	ANNEALING TEMP °F	ANNEALING TIME HOURS	HEAT TREATING TEMP °F	H.T. SOAKING TIME MINUTES 14/	AGING TEMP °F	AGING SOAKING TIME HOURS
Unalloyed Commercially Pure Comp A, B and C	1000-1100 900 800	1/2-1 2-4 8	1000-1300	1 1/2-2	Hardened only by cold work			
Alpha Alloys								
5A1-2.5Sn	1080-1125	1-2	1335-1550	1/4-4	Hardened only by cold work			
5A1-5Zr-5Sn	1100-1300	1/2-3/4	1335-1550	1/4-1				
7A1-12Zr	1275-1325	1/2-3/4	1630-1670	1/4-1				
7A1-2Cb-1Ta 2/	1000-1200	1/3-3/4	1630-1670	1/4-1				
8A1-1Mo-1V 1/	1285-1315	1/2	1430-1470	8				
Alpha-Beta Alloys								
8Mn 3/	950-1000	1/2-2	1250-1300	1	Not recommended			
2Fe-2Cr-2Mo 4/	800-1000	1/2-15	1175-1200	1/2	1650-1750	5-25	900-950	4-6
2.5A1-16V 5/	960-990	3-5	1360-1400	1/16-1/2	1360-1400	10-30	960-990	3-5
3A1-2.5V	---	---	1250-1350	1/2-1 1/2	Not recommended			
4A1-4Mn 6/	1250-1350	1/2-2 1/2	1250-1300	2-24	1420-1480	60-120	875-925	6-10
4A1-3Mo-1V 7/	900-1100	1/2-8	1225-1250	2-4	1620-1660	10-20	910-940	6-12
5A1-1.25Fe-2.75Cr 7/ 8/	1000-1100	1/2-2	1425-1650	1/3-2	1350-1550	10-60	900-1000	6-10
5A1-1.5Fe-4Cr-1.2Mo 9/	1100-1200	1/2-2	1180-1200	4-24	1650-1700	30-120	950-1050	4-8
6A1-4V 7/ 10/ 5/	900-1200	1/2-50	1275-1550	1/2-8	1670-1730	5-25	960-990	4-6
6A1-6V-2Sn 9/ 15/	1000-1100	1/2-3	1300-1500	2-3	1575-1675	30-60	875-1175	4-8
7A1-4Mo 11/	900-1300	1/2-8	1425-1450	1-8	1675-1275	30-90	975-1175	4-8
6A1-4V (low o) 10/ 5/	900-1200	1/2-50	1275-1550	1/2-8	Not recommended			
Beta Alloy								
3A1-13V-11Cr 12/	900-1000	1/4-60	1430-1470	1/4-1	1375-1425	30-90	880-920	2-60
1A1-8V-5Fe 13/	1000-1100	1/4-60	1200-1300	1/2-1 1/2	1375-1470	15-60	925-1000	1-3

Table 5-3. Heat Treat, Stress Relief and Annealing Temperatures and Times - Continued

MATERIAL	STRESS RELIEF TEMP °F	STRESS RELIEF TIME HOURS	ANNEALING TEMP °F	ANNEALING TIME HOURS	HEAT TREATING TEMP °F	H.T. SOAKING TIME MINUTES 14/	AGING TEMP °F	AGING SOAKING TIME HOURS

1/ Sheet: Regular anneal furnace cool
Duplex anneal. Mill anneal + 1435°F, 15 minutes air cool.
Triplex anneal. Mill anneal + 1850°F, 5 minutes air cool, + 1375, 15 minutes air cool.
Bar and Forgings:
Duplex anneal
1650-1850, 1 hour air cool + 1000°-1100°F, 8-24 hours air cool.

2/ Bar Duplex anneal: Mill anneal + 1000°-1200°F, 1/2-6 hours air cool.

3/ Anneal furncee cool at 300°F per hour maximum to 1000°F to 1050°F.

4/ Stress relief may be accomplished at 800°F - 15 hours, 850°F - 5 hours, at 900°F - 1 hour and 950°F - 1/2 hour.

5/ For 100 % stress relief, 1000°F - 50 hours or 1200°F - 5 hours. For 50 % relief, 1000°F - 5 hours or 1100°F - 1/2 hour.

6/ Furnace cool at 300°F maximum from anneal temperature for maximum formability, also, formability may be improved by holding at annealing temperature 24 hours.

7/ Slow cool to 1000°-1050°F maximum from upper annealing temperature.

8/ Anneal sheet at temperature for 20 minutes. For bar hold at anneal temperature 2 hours.

9/ Air cool from annealing temperature.

10/ For sheet anneal, heat 1300°-1350°F, 1 hour, furnace cool at a rate of 50°F per hour maximum to 800°F. Air cool may be used for lower ductility requirements. For bar and forging anneal, heat at 1275°-1325°F for 2 hours, air cool. For hydrogen removal by vacuum annealing, heat at 1300°F-1500°F for 1/2-2 hours, then furnace cool to 1100°F maximum.

11/ Furnace cool from annealing temp (1425°-1450°F) to 1000°-1050°F maximum at 300°F per hour (maximum) for maximum formability. For maximum creep properties (after lowering from upper annealing) temperature hold at 1050° for 24 hours.

12/ Solution heat treatment recommended for annealing. Stress relieve at temperature cited during aging. If aging not employed, heat treat at 1000°F for 15 minutes. Aging time will depend on strength level required/desired.

13/ Furance cool from upper anneallng temperature at 300°F per hour maximum to 900°F.

14/ Longer soaking times may be necessary for specific forgings. Shorter times are satisfactory when soak time is accurately determined by thermocouples attached to the load. Soaking time shall be measured from the time all furnace control instruments indicate recovery to the required (minimum) process range.

15/ Age at 1050°-1150°F air cool for best combination of mechanical properties and termal stability.

5-25. FABRICATION.

5-26. FORMING SHEET METAL-GENERAL. The forming of the unalloyed titantum can be accomplished at room temperature using approximately the same procedures as those extablished for 18-8 stainless steel. The basic difficulties encountered are sheet thickness, property variations, direction of grain flow and flatness. The above factors combined with high yield strength, high tensile strength and low uniform elongation of commercial titanium alloys makes forming difficult. The current equipment available was designed for material of uniform quality and considerable work is required for adaptation to form titanium.

5-27. BENDING. Straight-Edge Bending of titanium using power brake on hand forming equipment can be accomplished to a limited degree using the methods developed for stainless steel. The factors which require control are the compensation for springback and the bend radii. Springback is comparable to that of hard stainless steel when formed at room temperature. The bend radii will depend on the type of material or alloy and whether forming is accomplished hot or cold. The forming of material requiring tight bends or small radii necessitates the application of heat in the range of 500°F. The heat should be applied for only short periods of time to avoid excessive oxygen and nitrogen contamination which causes embrittlement. For approximate cold bend radii of sheet titanium see Table 5-4. Actual practice may reveal that smaller bend radii can be used.

5-28. DRAW FORMING. Deep draw forming should not be attempted unless adequate equipment and facilities are available. This will require that facilities be maintained for heating and controlling temperatures of the blanks to be formed and the dies used in the forming operation.

5-29. HYDRAULIC PRESS FORMING. Rubber pad hydropress forming can be accomplished either hot or cold depending on the type tooling employed and the press pressures used. This type of forming is used on parts that are predominately flat and have flanges, beads, and lightening holes. A male form block is set on the lower press platen and the blank held in place on the block by locating pins. A press-contained rubber pad (45 to 55 Shore Durometer hardness and about 8 inches thick) is located over the form block and blank. The press is then closed. As the ram is lowered, the rubber pad envelops the form block forcing the sheet metal blank to conform to its contour.

5-30. Many parts can be formed at room temperature on the hydropress if flange clips, wedges and hinge-type dies are used. When cold forming is employed, it is usually desirable to partially form the parts, stress-relieve at 1000°F for 20 minutes, then finish form. Hot forming for severely contoured parts or when only low-forming pressures are available is accomplished between 600°F and 800°F. For this procedure, the form block is heated to the required temperature, the blank positioned and covered with powdered or shredded asbestos; then a rubber pad 70 to 80 Durometer hardness is placed on top. This extra pad of rubber serves two purposes: First, it provides additional rigidity for forming; and second, it protects the press-contained rubber from the hot form block.

5-31. Tooling for hydropress form blocks, if elevated temperature forming is to be used, requires that pressure plates and dies be made somewhat thicker than in normal practice. If long runs are anticipated, it is recommended that form blocks be made from a good grade of hot-work tool steel due to the galling action of titanium at elevated temperatures.

5-32. STRETCH FORMING. Stretch forming has been used on titanium primarily to bend angles, hat sections, Z-sections and channels and to stretch form skins so that they will fit the contour of the airplane fuselage. This type of forming is accomplished by gripping the section to be formed in knurled jaws, loading until plastic deformation begins, then wrapping the part around a female die. This operation is performed at room temperature and should be done at a very slow rate. Spring back is equivalent to that of 1/4 hard 18-8 stainless steel. All blanks for stretch-forming should have the edges polished to remove any notch effects. Approximately 0.025 inch of sheared edges should be removed.

5-33. DROP-HAMMER FORMING. Drop-hammer forming of titanium has been very successful and has been accomplished both at room and at elevated temperatures. Kirksite is satisfactory for male and female dies where only a few parts are required. If long runs are to be made, ductile iron or laminated steel dies are usually necessary. In drop-hammer forming, the best results have been obtained by warning the female die to a temperature of 200° to 300°F to remove the chill and heating the blank to a temperature of 800° 1000°F for 10 to 15 minutes. The part is then struck and set in the die. Usually a stress relief operation at 1000°F for 20 minutes is necessary, then a restrike operation. In most instances, a finished part requiring no hand work is obtained.

Table 5-4. Recommended Minimum CCLD Bend Radii

TYPE/COMP	MINIMUM BEND RADIUS (90 DEGREE BEND) 1/ 0.070 & under thickness	over 0.070 to 0.187
Type I - Commercially Pure		
Comp A (unalloyed 40,000 psi)	2T	2.5T
Comp B (unalloyed 70,000 psi)	2.5T	3T
Comp C (unalloyed 55,000 psi)	2T	2.5T
Type II - Alpha Titanium Alloy		
Comp A (5AL02.5Sn)	4T	4.5T
Comp B (5AL-2.5Sn EL1)	4T	4.5T
Comp C (5AL-5Zr-5Sn)	4.5T	5T
Comp D (7AL-12Zr)	5T	5T
Comp E (7AL-2Cb-1Ta)	--	--
Comp F (8AL- 1Mo-1V)	4.5T	5T
Type III - Alpha-Beta		
Comp A (8Mn)	3T	3.5T
Comp B (4AL-3Mo-1V)	3.5T	4T
Comp C (6AL-4V)	4.5T	5T
Comp D (6AL-4V)	4.5T	5T
Comp E (6AL-6V-2Sn)	--	--
Comp F (7AL-4Mo)	--	--
Type IV - Beta		
Comp A (13V-11Cr-3AL)	3T	3-5T

1/ T = Thickness of material. Example: A piece of 0.040 MIL-T-9046, Type II, Composition A, would require a bend radii of 4 x 0.040 = 0.160 bend radii (minimum).

5-34. JOGGLING. Joggling of titanium can be accomplished without any particular difficulty provided the following rules are adhered to:

a. The joggle die corner radius should not be less than 3T-8T.

b. Joggle run-out should be the determining factors whether joggles are formed hot or cold. Joggles should be formed hot where a ratio of joggle run-out to joggle depth is less than 8.1.

c. Minimum joggle run-outs should be as follows:

Hot joggling - four times the joggle depth.

Cold joggling - eight times the joggle depth.

5-35. BLANKING AND SHEARING. These operations compare to those of 18-8 stainless steel in the 1/4 hard condition for commercially pure, and the alloys compare to 1/2 hard 18-8 stainless steel. The force required for titanium and its alloys is greater and the dies wear faster. Materials up to 0.125 inch in thickness have been sheared on 1/2 inch capacity flat bed shears designed for steel. If this capacity is to be exceeded, the shear designer should be consulted.

5-36. Before any forming or other operations are performed 0.025 inch of the sheared, blanked, sawed, or nibbed edges should be removed to prevent stress risers that will cause a tear in the part during forming operations.

5-37. Deleted.

Paragraphs 5-38 through 5-42 deleted.
Pages 5-13 through 5-14 deleted.

5-43. Deleted.

5-44. Deleted.

5-45. Deleted.

5-46. Deleted.

5-47. SOLDERING. Limited information is available on soldering. It is possible to successfully solder titanium where little strength is required, by precoating with a thin film of silver, copper or tin from their chloride salts. This can be accomplished by heating the chloride salts-coated titanium in an atmosphere controlled furnace as previously mentioned in paragraph 5-18. The resultant film should be made wet with either a 60% tin-40% lead or a 50%-50% tin and lead solder. Since the deposited film may dissolve in the liquid solder and dewet the surface, it is important that the time and temperature be held to a minimum.

5-48. RIVETING. Riveting of titanium can be accomplished using conventional equipment with rivets manufactured from commercially pure material; however, the rivet holes require close tolerances to insure good gripping. The driving time is increased about 65% over that required for high strength aluminum rivets. Better results can be obtained by using the squeeze method rather than the rivet gun and bucking bar. When it is necessary to have flush-head rivets, dimpling can be accomplished at temperatures of 500°F to 700°F. Other types of rivets such as high strength aluminum, stainless steel and monel are also used to join titanium.

5-49. Due to difficulties involved, the above mentioned method will probably be replaced in most cases with rivets of the high shear series, i.e., pin rivets such as NAS1806 through NAS1816, tension rivet NAS-2006 through NAS-2010, and shear rivet NAS-2406 through NAS-2412.

5-50. As with other metals, it is necessary to take precautions to avoid galvanic corrosion when titanium is riveted to other metals. This can be accomplished by coating the titanium with zinc chromate primer Specification MIL-P-8585.

Table 5-5 deleted.

5-51. MACHINING AND GRINDING.

5-52. MACHINING. Commercially pure, unalloyed titanium machines similarly to 18-8 stainless steel, but the alloy grades are somewhat harder. Variations in actual practice will depend on the type of work, equipment, and finish, so the following information is only intended as a guide.

5-53. The basic requirements are: rigid machine setups, use of a good cutting fluid that emphasizes cooling rather than lubrication, sharp and proper tools, slow speeds and heavy feeds. Since titanium has a tendency to gall and seize on other metals, the use of sharp tools is very important. Sliding contact, and riding of the tool on the work must be avoided.

5-54. TURNING. Commercially pure and alloy titanium is not difficult to turn. Carbide tools such as metal carbides C91 and Carboloy 44A and other similar types give the best results for turning titanium. Cobalt-type high speed steels give the best results of the many types available. Cast alloy tools such as Stellite, Lantung, Rexalloy, etc., may be used when carbide is not available, or when the high speed steels, are not satisfactory.

5-55. The recommended cutting fluids are waterbase cutting fluids such as soluble oils or chemical type fluids.

5-56. Tables 5-6 and 5-7 show suggested turning speeds, tool angles and feeds. All work should be accomplished with live centers since galling or seizing will occur on dead centers. Tool sharpness is again emphasized because a nick or a seized chip on a tool increases temperature and will cause rapid tool failures.

5-57. MILLING. Considering the type of tool which is required in milling operations, it can be readily seen that this type of machining is more difficult than turning. The difficulty encountered is that chips remain tightly welded to the cutter's edge at the end of cut or during the portion of the revolution that it does not cut. As the cutter starts the next machining portion the chips are knocked off. This damages the cutting edge and the tool fails rapidly.

5-58. One method that can be utilized to relieve this difficulty to a great extent is climb milling. The cutter machines the thinnest portion of the chip as it leaves the cut. Thus, the area of contact between chip and tool is at a minimum when the chip is removed at the start of the next cutting portion of the revolution. This will reduce the danger of chipping the tool. The machine used for climb milling should be in good condition because if there is any lost motion in the feed mechanism of the table, the piece being cut will be pulled into the cutter. This may damage the cutter or the work piece.

5-59. For effective milling, the work feed should move in the same direction as the cutting teeth, and for face milling the teeth should emerge from the cut in the same direction that the work is fed.

5-60. To select the appropriate tool material it is advisable to try both cast alloy and carbide tools to determine the better of the two for large milling jobs. This should be done since the cutter usually fails because of chipping, and the results are not as satisfactory with carbide as they are with cast-alloy tools. The increase in cutting speeds (20 to 30%) possible by using carbide rather than cast (all alloy tools) does not always compensate for the additional tool grinding cost.

5-61. The same water-base cutting fluids used for turning are recommended for milling; however, carbide tools may give better results when dry.

5-62. See Table 5-8 for recommended speed and feeds. For tool grinding information see Table 5-9.

5-63. DRILLING. Drilling of titanium can be accomplished successfully with ordinary high speed steel drills. Low speeds and heavy positive feeds are required. The unsupported portion of the drill should be as short as possible to provide maximum rigidity and to prevent drill running. All holes should be drilled without pilot holes if possible. As with other materials, chip removal is one of the principal problems and the appearance of the chip is an indication of the sharpness and correct grinding of the drill. In drilling deep holes, intermittent drilling is recommended. That is, the drill is removed from the hole at intervals to remove the chips.

5-64. The cutting fluids recommended are sulfurized and chlorinated coolants for drills with diameters of less than 1/4 inch and mixtures of mineral oil or soluble oil with water for hole sizes larger than 1/4 inch diameter.

5-65. The cutting speed should be 50 to 60 FPM for the pure grade of titanium and 30 to 50 FPM for alloy grades. Feeds should be 0.005 to 0.009 inch for 1/4 to 1/2 inch diameter drills; 0.002 to 0.005 inch for smaller drills. Point angle, 90° for drills 1/4 inch diameter and larger and 140° for drills 1/8 inch diameter or less; but 90°, 118° and 140° should be tried on large jobs to determine the angle that will give the best result. Helix angle 28° to 35° and lip relief 10°. Additional information on drills may be obtained from NAS907.

Table 5-6. Turning Speeds for Titanium Alloys

TYPE	MILITARY MIL-T-9047C	CUTTING SPEED FPM	FEED, in/rev	TOOL MATERIAL
Unalloyed 70,000 PSI	Class 1	250-300 150-170 170-200	0.010-0.020 0.004-0.007 0.005-0.010	Carbide Hi-Speed Steel Cast Allloy
5A1, 2.5 Sn 3A1, 5Cr 2Fe, Cr 2 Mo 6A1, 4V 4A1, 4Mn	Classes 2, 3, 4, 5, and 6	120-160 30-60 50-80	0.008-0.015 0.004-0.007 0.005-0.010	Carbide Bi-Speed Steel Cast Alloy
5A1, 1.5 Fe 1.5 Cr, 1.5 Mo	Class 7	110-150 20-40 40-70	0.005-0.012 0.003-0.006 0.004-0.008	Carbide Hi-Speed Steel Cast Alloy

NOTE: For cutting forging skin speed 1/4 of that above and feeds about 1/2.

Table 5-7. Tool Angles for Alloys

TOOL ANGLES	CARBIDE	HIGH SPEED STEEL	CAST ALLOY
Back Rake	0°	5° Pos	5 Pos
Side Rake	6°	5° - 15°	5° - 15°
Side Cutting Edge Angle	6°	5° - 15°	5° - 15°
End Cutting Edge Angle	6°	5°	5°
Relief	6°	5°	5°
Nose Radius	0.040 inch	0.010 inch	0.005 inch to 0.010 inch

Table 5-8. Speeds and Feeds for Milling

TYPE	MILITARY	MILLING SPEED FPM	FEED, IPT -IN INCHES	TOOL MATERIAL
Unalloyed 70,000 PSI	MIL-T-9047C Class 1	160-180 120-140	0.004-0.008 0.004-0.008	Carbide Cast Alloy
5A1, 2.5Sn 3A1, 5CR 2Fe, 2Cr, 2Mo, 6A1, 4V 4A1, 4Mn	Class 2, 3, 4, 5, 6	80-120 80-100	0.004-0.008 0.004-0.008	Carbide Cast Alloy
5A1, 1.5Fe, 1.5Cr 1.5Mo	Class 7	70-110 70-90	0.004-0.008 0.004-0.008	Carbide Cast Alloy

Table 5-9. Angles for Tool Grinding

ANGLES	CAST ALLOY TOOL	CARBIDE TOOL
Axial Rake	0°	0°
Radial Rake	0°	0°
Corner Angle	30°	60°
End Cutting Edge Angle	6°	6°
Relief	12°	6-10°

5-66. TAPPING. Due to the galling and seizing that are characteristic of titanium, tapping is one of the more difficult machining operations. Chip removal is one of the problems that will require considerable attention in an effort to tap titanium. Another problem will be the smear of titanium. Build up from smear will cause the tap to freeze or bind in the hole. These problems can be alleviated to some extent by the use of an active cutting fluid such as sulphurized and chlorinated oil.

5-67. Power equipment should be used when possible and a hole to be tapped should be drilled with a sharp drill to prevent excessive hardening of the hole wall. In the attempt to tap titanium, difficulties involved can be minimized by reducing the thread to 55 or 65% from the standard 78%.

5-68. The following are procedures and material recommended for tapping titanium:

a. Cutting speed: 40 to 50 FPM for unalloyed and 20 to 30 FPM for the alloy grades.

b. Type of Tap: Gun or spiral point, 2 fluted in sizes 1/4-20 or 1ess; 3 fluted in sizes greater than 1/4-20.

c. Cutting fluid; Active cutting oil such as oil, cutting, sulfurized mineral, Specification VV-O-283, Grade 1.

5-69. REAMING. Preparation of the hole to be reamed and the type of reamer used is the keynote to successful reaming operations. As with tapping operations, the hole to be reamed should be drilled with a sharp drill. A straight-fluted reamer can be used, but spiral-fluted reamers with carbide tips usually produce the best results. Speeds of 40-200 FPM and feeds of 0.005 to 0.008 inch are satisfactory; however, these factors depend on the size of the hole. Feeds should increase in proportion to the size of the hole. The removal of larger amounts lessens the degree of concentricity. If the degree of concentricity is an important factor, smaller amounts should be removed.

5-70. GRINDING. The essential requirements for grinding are the selection and use of grinding fluids and abrasive wheels. Grinding of titanium is different from grinding steel in that the abrasive grain of the wheel wears or is dissolved by a surface reaction, rather than wheel wear which is caused by breakage. To overcome this problem, lower wheel speeds and the use of aluminum oxide or soft bonded silicone carbide wheels employing wet grinding methods are recommended. Recommended wheel speeds are; 1500-2000 SFPM and table feeds of 400 to 500 inches per minute with down feed of 0.001 inch maximum per pass and using 0.05 inch cross feed for highest grinding ratios.

SECTION VI

COPPER AND COPPER BASE ALLOYS

6-1. COPPER AND COPPER BASE ALLOYS.

6-2. Most of the commercial coppers are refined to a purity of 99.90%, minimum copper plus silver. The two principal copper base alloys are brass and bronze, containing zinc and tin respectively, as the major alloying element. Alloy designations for wrought copper and copper alloys are listed in table 6-1, with the corresponding specification and common trade names.

6-3. COPPER ALLOYING ELEMENTS.

ZINC - Added to copper to form a series of alloys known as brasses. They are ductile, malleable, corrosion resistant and have colors ranging from pink to yellow.

TIN - Added to copper to form a series of alloys known as bronzes. Bronzes are a quality spring material, and are strong, ductile and corrosion resistant.

LEAD - Added to copper in amounts up to 1% to form a machinable, high-conductivity copper rod. It is added to brasses or bronzes in amounts of 0.5 to 4% to improve machinability and in the range of 2 -4% to improve bearing properties.

ALUMINUM - Added to copper as a predominating alloy element to form a series known as aluminum bronzes. These alloys are of high strength and corrosion resistance.

IRON - Added to copper along with aluminum in some aluminum bronzes and with manganese in some manganese bronzes.

PHOSPHOROUS - Added to copper principally as a deoxidizer and in some bronzes to improve spring properties.

NICKEL - Added to copper for higher strength without loss of ductility. They have excellent corrosion resistance.

SILICON - Added to copper to form the copper - silicon series having high corrosion resistance combined with strength and superior welding qualities. Small amounts are used as deoxidizers.

BERYLLIUM - Added to copper to form a series of age hardenable alloys. In the fully treated condition, it is the strongest of the copper base alloys and has an electrical conductivity of 20%. Berryllium-coppers are widely used for tools where non-sparking qualities are desired.

MANGANESE - Added primarily as a desulfurizing and de-gassifying element for alloys containing nickel.

6-4. CHEMICAL COMPOSITION. - The chemical composition of the copper alloys (listed by commercial trade name) is listed in table 6-1.

6-5. HEAT TREATMENT AND NOT WORKING TEMPERATURE OF COPPER ALLOYS.

NOTE

Additional Heat Treatment information is discussed in Section IX.

6-6. During production and fabrication, copper alloys may be heated for homogenizing, hot working, stress relief for solution treatment, and precipitation hardening. The temperatures commonly used for heating, hot working and annealing after cold working are given in table 6-2.

6-7. STRESS RELIEF OF COPPER ALLOYS.

6-8. Table 6-3 below gives a list of typical stress relief treatments commonly used in industry. This table is listed in terms of chemical composition percents, and should be used as representing average stress relieving temperatures.

6-9. MACHINING COPPER AND COPPER ALLOYS. Free cutting brass is one of the most easily machined metals and serves as a standard for machinability ratings of copper alloys. The following table gives the machinability ratings and recommended speeds and feeds for use with high speed steel tools.

6-10. WROUGHT-COPPER-BERYLLIUM ALLOYS. The beryllium copper alloys are frequently used due to their ability to respond to precipitation or age hardening treatments and other beneficial characteristics. Some of the characteristics are; good electrical and thermal conductivity, high strength hardness, corrosion resistance, good wear resistance, non-magnetic qualities and very good fatigue strength.

Table 6-1. Chemical Composition by Trade Name

COPPER ALLOY NO.	SPECIFICATION		
	FEDERAL	MILITARY	TRADE NAME
101	QQ-A-673, type II QQ-C-502 QQ-C-576 QQ-W-343 WW-P-377	MIL-W-85C	Oxygen free certified copper.
102	QQ-A-673 Type II QQ-C-502 QQ-C-825 QQ-C-576 QQ-R-571, Class FS-RCu-1 QQ-W-343 WW-T-799	MIL-W-85C MIL-W-6712A	Oxygen free copper.
104	QQ-C-502 QQ-C-825		Oxygen free with silver.
105	QQ-C-502 QQ-C-825		Oxygen free with silver.
110	QQ-A-673, Type I QQ-C-502 QQ-C-825 QQ-C-576	MIL-W-3318 MIL-W-6712	Electrolyte Tough pitch copper.
128	QQ-C-502 QQ-C-576		Fire refined tough pitch with silver.
130	QQ-C-502 QQ-C-576		Fire refined tough pitch with silver.
170 172	QQ-C-530 QQ-C-533		Beryllium Copper
210	QQ-W-321, comp 1		Gilding, 95%
220	QQ-W-321, comp 2	MIL-W-85C MIL-W-6712	Commercial bronze, 90%
230	QQ-B-613, comp 4 QQ-B-626, comp 4 QQ-W-321 comp 3 WW-P-351 Grade A WW-T-791 Grade 1		Red Brass, 85%

Table 6-1. Chemical Composition by Trade Name - Continued

COPPER ALLOY NO.	SPECIFICATION		
	FEDERAL	MILITARY	TRADE NAME
240	QQ-B-591 QQ-B-613 comp 3 QQ-B-626 comp 3 QQ-B-650 comp D QQ-W-321 comp 4	JAN-W-472	Low Brass, 80%
260	QQ-B-613 comp 2 and 11 QQ-B-626 comp 2 and 11 QQ-B-650 comp C QQ-W-321 comp 6	*MIL-S-22499 MIL-T-6945 comp II MIL-T-20219 *Laminated Shim Stock	Cartridge brass, 70%
261	Same as 260		
262	QQ-B-613 comp 11 QQ-B-626 comp 11		
268	QQ-B-613 comp 1 and 11 QQ-B-626 comp 1 and 11		Yellow brass, 66% (Sheet)
270	QQ-B-613 comp 11 QQ-B-626 comp 11 QQ-W-321 comp 7		Yellow brass, 65% (rod and wire)
274	QQ-B-613 comp 11 QQ-B-626 comp 11 QQ-W-321 comp 8		Yellow brass 63%

Table 6-1. Chemical Composition by Trade Name - Continued

COPPER ALLOY NO.	SPECIFICATION		
	FEDERAL	MILITARY	TRADE NAME
280	QQ-B-613 comp 11 QQ-B-626 comp 11 WW-P-351 Grade C WW-T-791 Grade 3		Muntz metal, 60%
298	QQ-B-650 comp A		Brazing Alloy
330	QQ-B-613 comp 11 QQ-B-626 Comp 11 WW-P-351 Grade B WW-T-791 Grade 2	MIL-T-6945 comp III	Low leaded brass
331	QQ-B-613 comp 11 QQ-B-626 comp 11		
110	QQ-R-571, Class FS-RW-1 QQ-W-343 WW-P-377		
111	QQ-C-502 QQ-C-825 QQ-C-576 QQ-W-343		Electrolytic Touch pitch anneal resist copper
114	QQ-C-502 QQ-C-825 QQ-C-576		Tough pitch with silver
116	QQ-C-502 QQ-C-825 QQ-C-576		Tough pitch with silver
120	QQ-C-502 QQ-C-576 WW-P-377 WW-T-797 WW-T-799	MIL-W-85C	Phosphorous deoxidized low residual phosphorus copper

Table 6-1. Chemical Composition by Trade Name - Continued

COPPER ALLOY NO.	SPECIFICATION		
	FEDERAL	MILITARY	TRADE NAME
121	QQ-C-502 QQ-C-576		
122	QQ-A-674, Type III QQ-C-502		Phosphorus deoxidized high residual phosphorus copper
122	QQ-C-576 WW-P-377 WW-T-797		
123	QQ-C-502 QQ-C-576		
125	QQ-C-502 QQ-C-576		Fire refined tough pitch copper
127	QQ-C-502 QQ-C-576		Fire refined tough pitch with silver
332	QQ-B-613 comp 11 QQ-B-626 comp 11		High leaded brass
340	QQ-B-613 comp 11 QQ-B-626 comp 11		Medium leaded brass 641/2%
335	QQ-B-613 comp 11 QQ-B-626 comp 11		Low leaded brass
342	QQ-B-613 comp 11 and 24 QQ-B-626 comp 11 and 24		High leaded brass 641/2%
344	QQ-B-613 comp 11 QQ-B-626 comp 11		
347	QQ-B-613 comp 11 QQ-B-626 comp 11		
348	QQ-B-613 comp 11 QQ-B-626 comp 11		

Table 6-1. Chemical Composition by Trade Name - Continued

COPPER ALLOY NO.	SPECIFICATION		
	FEDERAL	MILITARY	TRADE NAME
350	QQ-B-613 comp 11 QQ-B-626 comp 11		Medium leaded brass 62%
353	QQ-B-613 comp 11 QQ-B-626 comp 11		Extra High leaded brass
356	QQ-B-613 comp 11 QQ-B-626 comp 11 and 22		Extra High leaded brass
370	QQ-B-613 comp 11 QQ-B-626 comp 11		Free cutting muntz metal
360	QQ-B-613 comp 11 QQ-B-626 comp 11 and 22		Free cutting brass
377	QQ-B-626 comp 21		Forging brass
443	WW-T-756		Admiralty, Arsenical
444	WW-T-756		Admiralty, Antimonial
445	WW-T-756		Admiralty, Phosphorized
462	QQ-B-626 comp 11 QQ-B-637 comp 4		Naval Brass, 631/2%
464	QQ-B-613 comp 11 QQ-B-626 comp 11 QQ-B-637 comp 1	MIL-W-6712 MIL-T-6945 comp 1	Naval Brass
465	QQ-B-613 comp 11 QQ-B-626 comp 11 QQ-B-637 comp 1	MIL-W-6712 MIL-T-6945 comp 1	Naval brass, arsenical

Table 6-1. Chemical Composition by Trade Name - Continued

COPPER ALLOY NO.	SPECIFICATION		
	FEDERAL	MILITARY	TRADE NAME
466	QQ-B-613 comp 11 QQ-B-626 comp 11 QQ-B-637 comp 1	MIL-W-6712 MIL-T-6945 comp 1	Naval Brass, antimonial
467	QQ-B-613 comp 11 QQ-B-626 comp 11 QQ-B-637 comp 1	MIL-W-6712 MIL-T-6945	Naval Brass, phosphorized
470	QQ-R-571 Class FS-RWZn-1		Naval brass, welding and brazing rod
472	QQ-B 650 comp B		Brazing Alloy
482	QQ-B-626 comp 11 QQ-B-637 comp 2	MIL-W-6712 MIL-T-6945 comp 1	Naval Brass, medium leaded
485	QQ-B-626 comp 1 QQ-B-637 comp 3	MIL-W-6712 MIL-T-6945 comp 1	Naval Brass, High leaded
510	QQ-B-750 comp A QQ-W-401 QQ-R-571, class FS-RCuSm -2		Phosphor Bronze A
518	QQ-R-571 Class FS-RCu Sm-2		Phosphor bronze
521	QQ-R-571 Class FS-Rcu Sm-2		Phosphor Bronze C
524	QQ-B-750 Comp D		Phosphor Bronze D
544	QQ-B-750	MIL-B-13501	Phosphor Bronze B-2
606	QQ-C-450 comp 3		
612	QQ-C-450 comp 4		

Table 6-1. Chemical Composition by Trade Name - Continued

COPPER ALLOY NO.	SPECIFICATION		
	FEDERAL	MILITARY	TRADE NAME
614	QQ-C-450 comp 5		Aluminum Bronze D
618		MIL-W-6712 MIL-R-18818 MIL-RUA1-2	
622		MIL-R-18818 class MIL-RCA-B	
651	QQ-C-591 comp B		Low silicon bronze B
655	QQ-C-591 comp A	MIL-T-8231	High Silicon Bronze A
656	QQ-R-571 Class FS-RCuS1	MIL-E13191 class MIL-EcuSi-A	
658		MIL-E-13191 class MIL-ECuSi-A	
661	QQ-C-591 comp D		
670	QQ-B-728 Class B		Manganese Bronze B
675	QQ-B-728 Class A		Manganese Bronze A
680	QQ-R-571 Class FS-RCu-Zn-3		Bronze Low Fuming (Nickel)
681	QQ-R-571 class FS-RCuZn-2		Bronze, Low Fuming
692	QQ-C-591 Comp E		Silicon Brass
715	QQ-R-571 Class FS-RCuNi		Copper Nickel 30%
735	QQ-C-585 comp 6		
745	QQ-C-585 comp 5 QQ-C-586 comp 5 QQ-W-340 comp 5		Nickel Silver 65-10

Table 6-1. Chemical Composition by Trade Name - Continued

COPPER ALLOY NO.	SPECIFICATION		
	FEDERAL	MILITARY	TRADE NAME
752	QQ-C-585 comp 1 QQ-C-586 comp 1 QQ-W-340 comp 1		Nickel Silver 65-18
764	QQ-C-586 comp 3 QQ-W-340 comp 3		
766	QQ-C-585 comp 7		
770	QQ-C-585 comp 2 QQ-C-586 comp 2 QQ-W-340 comp 2		Nickel Silver 55-18
794	QQ-C-586 comp 4 QQ-W-340 comp 4		

Table 6-2. Hot Working and Annealing Temperatures for Copper and Wrought Copper Alloys

COMMERCIAL DESIGNATION	CHEMICAL COMPOSITION	HOT WORKING TEMP °F	ANNEALING TEMP °F
Copper, commercially pure	99,93 Cu	1300 to 1650	700 to 1200
Gilding Metal	95 Cu, 5 Zn	1300 to 1650	800 to 1450
Commercial Bronze	90 Cu, 10 Zn	1400 to 1600	800 to 1450
Red Brass	85 Cu, 15 Zn	1450 to 1650	800 to 1350
Low Brass	80 Cu, 20 Zn	1450 to 1650	800 to 1300
Cartridge Brass	70 Cu, 30 Zn	1350 to 1550	800 to 1300
Yellow Brass	65 Cu, 35 Zn	(a)	800 to 1300
Muntz Metal	60 Cu, 40 Zn	1150 to 1450	800 to 1100
Leaded Commercial Bronze	89 Cu, 9.25 Zn, 1.75 Pb	(a)	800 to 1200
Low Leaded Brass	64.5 Cu, 35 Zn, 0.5 Pb	(a)	800 to 1300
Medium Leaded Brass	64.5 Cu, 34.5 Zn, 1 Pb	(a)	800 to 1200

Table 6-2. Hot Working and Annealing Temperatures for Copper and Wrought Copper Alloys - Continued

COMMERCIAL DESIGNATION	CHEMICAL COMPOSITION	HOT WORKING TEMP °F	ANNEALING TEMP °F
High Leaded Brass	62.5 Cu, 35.75 Zn, 1.75 Pb	(a)	800 to 1100
Extra High Leaded Brass	62.5 Cu, 35 Zn, 2.5 Pb	(a)	800 to 1100
Free Cutting Brass	61. 5 Cu, 35.5 Zn, 3 Pb	1300 to 1450	800 to 1100
Leaded Muntz Metal	60 Cu, 39.5 Zn, 5 Pb	1150 to 1450	800 to 1100
Free Cutting Muntz Metal	60.5 Cu, 38.4 Zn, 1.1 Pb	1150 to 1450	800 to 1100
Forging Brass	60 Cu, 38 Zn, 2 Pb	1200 to 1500	800 to 1100
Architectural Bronze	57 Cu, 40 Zn, 3 Pb	1200 to 1400	800 to 1100
Admiralty	71 Cu, 28 Zn, 1 Sn	1200 to 1500	800 to 1100
Naval Brass	60 Cu, 39.25 Zn, 0.75 Sn	1200 to 1400	800 to 1100
Leaded Naval Brass	60 Cu, 37.5 Zn, 1.75 Sn	1200 to 1450	800 to 1100
Manganese Bronze	58.5 Cu, 39.2 Zn		
	1 Sn, 3Mn, 1Fe	1250 to 1450	800 to 1100
Aluminum Brass	76.Cu, 22Zn, Z al	1450 to 1550	800 to 1100
Phosphor Bronze “A”	95 Cu, 5 Sn	(a)	900 to 1250
Phosphor Bronze “C”	92 Cu, 8 Sn	(a)	900 to 1250
Phosphor Bronze “D”	90 Cu, 10 Sn	(a)	900 to 1250
Phosphor Bronze “E”	98- 75 Cu, 1.25 Sn	1450 to 1600	900 to 1200
Cupro-Nickel 30%	70 Cu, 30 Ni	1700 to 2000	1200 to 1600
Nickel Silver 18% (A)	65 Cu, 17 Zn, 18 Ni	(a)	1100 to 1500
Nickel Silver 18% (B)	55 Cu, 27 Zn, 18 Ni	(a)	1100 to 1400
High-Silicon Bronze (A)	94.8 Cu, 3 Si, 1.5 Mn, 0.7 Zn	1300 to 1650	900 to 1300
Low Silicon Bronze (b)	96. Cu, 2 Si, 1.5 Zn, 0.5 Mn	1300 to 1650	900 to 1250

(a) These alloys are usually hot extruded after casting, further hot working is uncommon.

6-11. Typical Engineering properties of alloys 170, Specification QQ-C-530 and 172, Specification QQ-C-533 are cited in Table 6-5.

6-12. HEAT TREATING PROCEDURES AND EQUIPMENT REQUIREMENTS.

NOTE

SAE-AMS-H-7199, Heat Treatment of Wrought Copper-Beryllium Alloys, Process for (Copper Alloy numbers 170, 172 and 175), will be the control document for heat treatment of wrought copper-beryllium alloy, numbers 170, 172 and 175. For complete description of heat treat requirements for these alloys, refer to the latest issue of SAE-AMS-H-7199.

6-13. Furnaces for solution heat treating of copper-beryllium items/parts may be heated by electricity, gas or oil, with either controlled gas atmosphere or air (static or forced), used in the chamber, continuous or induction types. Molten salt baths shall not be used because of corrosive attack of beryllium alloys by the molten salts at solution heat treatment temperatures. Air atmosphere furnaces shall not be used when the loss of material due to excessive scaling is detrimental to the finished part.

6-14. The furnace alloy shall be capable of maintaining a temperature in working zone with a normal load, of ± 20°F for solution heat treatment, or ± 5°F for aging, or precipitation heat treatment. In addition, the temperature in working zone shall not vary above the maximum or below the minimum specified for the alloy being treated, during the holding portion of the treatment cycles (See Table 6-6).

6-15. SOLUTION HEAT TREATMENT COPPER-BERYLLIUM. Normally solution heat treatment is not required because the material is furnished in a condition suitable for accomplishing forming operations and then precipitation heat treating. An exception is when the material has been rendered unsuitable for precipitation or age hardening as result of welding, brazing or other fabrication operations or when, cold working requirements demand intermediate softening (annealing) treatment.

6-16. The solution heat treatment temperatures for alloys 170 and 172 shall be 1425° to 1460°F. The time the material is held at the temperature will determine the potential properties of the material. Insufficient time will make it impossible to achieve maximum strength after precipitation hardening, while excessive time may cause grain growth with attendant harmful possibilities. Once the parts are brought up to temperature it is recommended that material be held at temperature for 1 hour per inch of thickness. For parts less than 1/2 inch in thickness, 1/6-1/2 hour may be sufficient. Test sample should be used to determine specific time or if laboratory facilities are available an examination of microstructure will confirm the adequacy of the time selected. The part/material should be rapidly (10 seconds or under) quenched in water from the annealing temperature. An agitated quench should be used. Some oxidation will occur as a result of the annealing temperatures and it should be removed by pickling or other suitable cleaning process.

6-17. PRECIPITATION OR AGE HARDENING. Appreciable changes can be produced in both mechanical and physical by this treatment. The actual changes can be controlled by the time and temperature of hardening. Table 6-6 gives times and temperatures for obtaining various tempers.

Table 6-3. Typical Stress-Relief Treatments for Certain Copper Alloys

ALLOY COMPOSITION	TEMP °F	TIME, HOURS
Copper, commercially pure	300	1/2
90 Cu - 10 Zn	400	1
80 Cu - 20 ZN	500	1
70 Cu - 30 ZN	500	1
63 CU - 37 ZN	475	1
60 CU - 40 ZN	375	1/2
70 Cu - 29 ZN - 1 SN	575	1
85 Cu - 15 Ni	475	1
70 Cu - 30 Ni	475	1
64 Cu - 18 ZN - 18 Ni	475	1
95 Cu - 5 Sn	375	1
90 Cu - 10 Sn	375	1

Table 6-4. Standard Machinability Rating of Copper Alloys

ALLOY DESIGNATION	MACHINA-BILITY RATING	SURFACE SPEED FEET PER MINUTE	ROUGHING FEED, INCH	FINISHING FEED, INCH
Leaded Copper	80	300 to 700	0.006 to 0.020	0.003 to 0.015
Leaded Commercial		300 to 700	0.006 to 0.020	0.003 to 0.015
Bronze	80	300 to 700	0.006 to 0.020	0.003 to 0.015
Low Leaded Brass	60	300 to 700	0.006 to 0.020	0.003 to 0.015
Medium Leaded Brass	70	300 to 700	0.006 to 0.020	0.003 to 0.015
High Leaded Brass	90	300 to 700	0.006 to 0.020	0.003 to 0.015
Free Cutting Brass*	100	300 to 700	0.006 to 0.020	0.003 to 0.015
Forging Brass	80	300 to 700	0.006 to 0.020	0.003 to 0.015
Leaded Naval Brass	70	300 to 700	0.006 to 0.020	0.003 to 0.015
Architectural Bronze	90	300 to 700	0.006 to 0.020	0.003 to 0.015
Red Brass, 85%	30	150 to 300	0.015 to 0.035	0.005 to 0.015
Low Brass, 80%	30	150 to 300	0.015 to 0.035	0.005 to 0.015
Muntz Metal	40	150 to 300	0.015 to 0.035	0.005 to 0.015
Naval Brass	30	150 to 300	0.015 to 0.035	0.005 to 0.015
Manganese Bronze (A)	30	150 to 300	0.015 to 0.035	0.005 to 0.015
Leaded Nickel Silver, 12%	50	150 to 300	0.015 to 0.035	0.005 to 0.015
Leaded Nickel Silver 18%	50	150 to 300	0.015 to 0.035	0.005 to 0.015
High Silicon Bronze (A)	30	150 to 300	0.015 to 0.035	0.005 to 0.015
Leaded Silicon Bronze (d)	60	150 to 300	0.015 to 0.035	0.005 to 0.015
Aluminum Silicon Bronze	60	150 to 300	0.015 to 0.035	0.005 to 0.015
Electrolytic Tough pitch copper	20	75 to 150	0.015 to 0.040	0.005 to 0.020
Commercial Bronze	20	75 to 150	0.015 to 0.040	0.005 to 0.020
Phosphor Bronze	20	75 to 150	0.015 to 0.040	0.005 to 0.020
Nickel Silver	20	75 to 150	0.015 to 0.040	0.005 to 0.020
Cupro-Nickel	20	75 to 150	0.015 to 0.040	0.005 to 0.020
Aluminum Bronze	20	75 to 150	0.015 to 0.040	0.005 to 0.020
Beryllium Copper	20	75 to 150	0.015 to 0.040	0.005 to 0.020
Chromium Copper	20	75 to 150	0.015 to 0.040	0.005 to 0.020

* Table based on machining characteristics in comparison to this alloy.

Table 6-5. Typical Engineering Properties

	TENSILE STRENGTH KSI	YIELD STRENGTH 0.2% OFFSET	% ELONG-ATION IN 2 INCHES	FATIGUE (1) STRENGTH KSI	ROCKWELL HARDNESS	ELEC-TRICAL CONDUC-TIVITY % OF 1 ACS
A- Annealed	60-78	28-36,000	35-60	30-35	B45- 78	17-19
1/4 Hard	75-88	60-80,000	10-35	31-36	B68-90	16-18
1/2 Hard	85-100	55-70,000	5-25	32-38	B88-96	15-17
Hard	100-120	90-112,000	2-8	35-39	B96-102	15-17
AT	165-190	100-125,000	4-10	34-38	C36-MIN	22-25
1/4 HT	175-200	110-135,000	3-6	35-39	C38-MIN	22-25
1/2 HT	785-210	160-195,000	2-5	39-43	C39-MIN	22-25
HT	190-215	165-205,000	1-4	41-46	C40-MIN	22-25
(1) Based on 100,000,000 load cycles.						

Table 6-6. Age Hardening Time-Temperature Conditions and Material Temper Designations

MATERIAL FORM	TEMPER DESIGNATION BEFORE AGE HARDENING	AGE HARDENING TIME HRS.	AGE HARDENING TEMP (°F)	TEMPER DESIGNATION AFTER AGE HARDENING
Plate, Sheet or Strip	A	3	600 ± 5	AT
	1/4 H	2-1/2	600 ± 5	1/4 HT
	1/2 H	2	600 ± 5	1/2 HT
	H	2	600 ± 5	HT
Forgings Rod and Bar 3/4 Inch or Less	A	3	600 ± 5	AT
	H	2	600 ± 5	HT
Over 3/4 Inch	H	3	600 ± 5	HT
Wire	A	3	600 ± 5	AT
	1/4 H	2	600 ± 5	1/4 HT
	1/2 H	1-1/2	600 ± 5	1/2 HT
	3/4 H	1	600 ± 5	3/4 HT

NOTE: For additional data see Specification SAE-AMS-H-7199.

SECTION VII

TOOL STEELS

7-1. GENERAL.

7-2. Tool steels are essential to the fabrication of aircraft parts. It is therefore necessary to provide guidance in the handling of these important metals.

7-3. Tool steels are produced and used in a variety of forms. The more common forms are bars, (round, square, hexagonal, or octaganal), drill rods, (round, square, or rectangular), flats, and forged shapes.

7-4. ALLOYING ELEMENTS IN TOOL STEELS. (See Table 7-2, chemical composition table.)

a. CARBON - Carbon is the most important single element in tool steel. Changing the carbon content a specific amount will change the physical properties a greater degree than the same amount of any other element. Degree of hardness of tool steel quenched from a suitable temperature is a function of carbon content alone.

b. CHROMIUM - In amounts up to 1.80% the addition of chromium produced a marked increase in the hardenability (depth of hardness) of steels. Small amounts of chromium toughens the steel (greater impact strength), and increases its strength. Machine ability decreases as chromium increases. The addition of 5 to 15% chromium imparts hardening qualities to the steel. A degree of red hardness and resistance to wear and abrasion results from the addition of chromium to steel.

c. COBALT - Cobalt is sometimes used in high speed tools. Addition of 5 to 8% increase the red hardness of these steels.

d. MANGANESE - This element is present in all steels. In amounts of less than 1/2%, it acts as a deoxidizer and desulfurizer. In amounts greater than 15% it gives steel air hardening tendencies. In intermediate amounts it is necessary to have other alloying agents present with manganese because of its tendency to make the steel brittle.

e. MOLYBDENUM - Always used in conjunction with other alloying elements, molybdenum acts as an intensifier. It improves the deep hardening and elevated temperature properties of steel.

f. NICKEL - Nickel makes the steel more ductile. It is used in only a few applications and only in small amounts.

g. SILICON - This element is present in all steels. In amounts of 1/4 to 1% it acts as a deoxidizer. Silicon is added to shock resisting and hot work steels to improve their impact characteristics and hardenability. It has a graphitizing influence and usually requires the addition of carbide stabilizing elements such as molybdenum and chromium.

h. TUNGSTEN - One of the most important features of tungsten steels is their high red hardness. Tungsten steels are fine grained and high strength, which means they hold good cutting edges. Tungsten content is usually 5 - 12% in heat resisting tool steels, 4 - 9% in tungsten - molybdenum high speed steels, and 14 - 20% in straight tungsten high speed steel.

i. VANADIUM - This element forms stable carbides and has considerable effect on the hardenability of steels. Undissolved vanadium carbides inhibit grain growth and reduce hardenability. Dissolved carbides increase hardenability. Vanadium is also used as a deoxidizer. It is added to plain carbon tool steels to make them fine grained and tough. It is added to high speed and hot working steels to resist grain growth and help maintain their hardness at elevated temperatures.

7-5. SPECIFICATIONS. The armed services procure tool steels under three different Federal Specifications, dependent upon its intended use. Table 7-1 lists these specifications, and present and past classification of the tool steels. Army Specification 57-108A was superseded by three Army Ordnance Specifications, QQ-S-778, QQ-S-779, and QQ-S-780. which were then superseded by Federal Specification's QQ-T-570, QQ-T-580 and QQ-T-590 respectively.

D - High carbon-high chromium types

H - Hot work tool steels

T - High speed tool steels

M - Molybdenum Base types

L - Special purpose, low alloy types

F - Carbon tungsten tool steels

Table 7-1. Tool Steel Specifications

SAE DESIGNATION	FEDERAL SPECIFICATION		SUPERSEDED SPECIFICATION	
	NUMBER	CLASS	NUMBER	CLASSIFICATION
W1-.80 Carbon	QQ-T-580	W1-08	57-108A	A1
W1-.90 Carbon	QQ-T-580	W1-09	57-108A	A2
W1-1.0 Carbon	QQ-T-580	W1-10	57-108A	A3
W1-1.2 Carbon	QQ-T-580	W1-12	57-108A	A4/A5
W2-.9 Carbon V	QQ-T-580	W2-09	57-108A	B1
W2-1.0 Carbon V	QQ-T-580	W2-10	57-108A	B1
W3-1.0 Carbon VV	QQ-T-580	W3-10	QQ-S-00779 (Army)	FS-W3-10
A2	QQ-T-570	A2	57-108A	C1
A6	QQ-T-570	A6	------	------
D2	QQ-T-570	D2	57-108A	C2
D3	QQ-T-570	D3	57-108A	C3
D5	QQ-T-570	D5	QQ-S-00778 (Army)	FS-D5
D7	QQ-T-570	D7	------	------
F3	QQ-T-570	F3	57-108A	D1
H11	QQ-T-570	H11	------	------
H12	QQ-T-570	H12	QQ-S-00778 (Army)	FS-H12
H13	QQ-T-570	H13	------	------
H21	QQ-T-570	H21	QQ-S-00778 (Army)	FS-H21
T1	QQ-T-590	T1	QQ-S-00780 (Army)	FS-T1
T2	QQ-T-590	T2	QQ-S-00780 (Army)	FS-T2
T3	QQ-T-590	T3	------	
T4	QQ-T-590	T4	QQ-S-00780 (Army)	FS-T4
T5	QQ-T-590	T5	QQ-S-00780 (Army)	FS-T5
T6	QQ-T-590	T6	MIL-S-15046 (Ships)	T6
T7	QQ-T-590	T7	QQ-S-00780 (Army)	FS-T7
T8	QQ-T-590	T8	QQ-S-00780 (Army)	FS-T8
M1	QQ-T-590	M1	QQ-S-00780 (Army)	FS-M1
M2	QQ-T-590	M2	QQ-S-00780 (Army)	FS-M2
M3	QQ-T-590	M3	QQ-S-00780 (Army)	FS-M3
M4	QQ-T-590	M4	------	------
M10	QQ-T-590	M-10	57-108A	F1
M15	QQ-T-590	M15	------	------
M30	QQ-T-590	M30	57-108A	F3
M34	QQ-T-590	M34	QQ-S-00780 (Army)	FS-M34
01	QQ-T-570	01	57-108A.QQ-T-778	B4
02	QQ-T-570	02	57-108A	B3
06	QQ-T-570	06	------	------
L6	QQ-T-570	L6	------	------
L7	QQ-T-570	L7	QQ-S-00778 (Army)	FS-L7
T15	QQ-T-590	T15	------	------
S1	QQ-T-570	S1	QQ-S-00778 (Army)	FS-S1
S2	QQ-T-570	S2	QQ-S-00778 (Army)	FS-S2
S5	QQ-T-570	S5	QQ-S-00778 (Army)	FS-S5
W5	QQ-T-570	W5	QQ-S-00778 (Army)	FS-W5

Table 7-2. Chemical Composition, Tool Steel

SAE DESIGNATION	CHEMICAL C0MPOSITION, PERCENT (TABLE II) C	MN	SI	CR	V	MO	W	CO	NI	CU	P
W1-.80 Carbon	0.70-0.85	0.15-0.35	0.10-0.35	0.15	0.10	0.10	0.15		0.20	0.20	0.025
W1-.90 Carbon	0.85-0.95	0.15-0.35	0.10-0.35	0.15	0.10	0.10	0.15		0.20	0.20	0.025
W1-1.00 Carbon	0.95-1.10	0.15-0.35	0.10-0.35	0.15	0.10	0.10	0.15		0.20	0.20	0.025
W1-1.20 Carbon	1.10-1.30	0.15-0.35	0.10-0.35	0.15	0.10	0.10	0.15		0.20	0.20	0.025
W2-.90 Carbon-V	0.85-0.95	0.15-0.35	0.10-0.35	0.15	0.15-0.35				0.20	0.20	0.030
W2-1.00 Carbon-V	0.95-1.10	0.15-0.35	0.10-0.35	0.15	0.15-0.35	0.10	0.15		0.20	0.20	0.030
W3-1.00 Carbon VV	0.95-1.10	0.15-0.35	0.10-0.35	0.15	0.35-0.50	0.10	0.15		0.20	0.20	0.030
A2-5% Chromium	0.95-1.05	0.45-0.75	0.20-0.40	4.75-5.50	.40	0.90-1.40					
A6-Maganese	0.65-0.75	1.80-2.20	0.20-0.40	0.90-1.20		0.90-1.40					
D2	1.40-1.60	0.30-0.50	0.30-0.50	11.0-13.0	0.80	0.70-1.20		0.60			
D3	2.00-2.35	0.24-0.45	0.25-0.45	11.0 13.0	0.80	0.80	0.15				
D5	1.40-1.60	0.30-0.50	0.30-0.50	11.0 13.0	0.80	0.70-1.20		2.5-3.5			
D7	2.15-2.50	0.30-0.50	0.30-0.50	11.5 13.5	2.8-4.4	0.70-1.20					
F3	1.25-1.40	0.20-0.50	0.60-0.90		0.25 max		3.00 4.50				
H11	0.30-0.40	0.20-0.40	0.80-1.20	4.75 5.50	0.30-0.50	1.25-1.75					
H12	0.30-0.40	0.20-0.40	0.80-1.20	4.75-5.50	0.50 max	1.25-1.75	1.0-1.7				
H-13	0.30-0.40	0.20-0.40	0.80-1.20	4.75-5.50	0.80-1.20	1.25-1.75					
H21	0.30-0.40	0.20-0.40	0.15-0.30	3.00 3.75	0.30-0.50		8.75 10.00				
T1	0.65-0.75	0.20-0.40	0.20-0.40	3.75-4.50	0.90-1.30		17.25-18.75				
T2	0.75-0.85	0.20-0.40	0.20-0.40	3.75-4.50	1.80-2.40	0.70-1.00	17.50-19.00				
T3	1.00-1.10	0.20-0.40	0.20-0.40	3.75-4.50	2.90-3.50	0.70-1.00	17.50-19.00				
T4	0.70-0.80	0.20-0.40	0.20-0.40	3.75-4.50	0.80-1.20	0.10-1.00	17.25-18.75	4.25 5.75			

Table 7-2. Chemical Composition, Tool Steel - Continued

SAE DESIGNATION	CHEMICAL C0MPOSITION, PERCENT (TABLE II) C	MN	SI	CR	V	MO	W	CO	NI	CU	P
T5	0.75-0.85	0.20-0.40	0.20-0.40	3.75-4.75	1.80-2.40	0.70-1.00	17.50-19.00	7.00 9.50			
T6	0.75-0.85	0.20-0.40	0.20-0.40	4.00-4.75	1.50-2.10	0.70-1.00	18.50-21.25	10.25 13.75			
T7 T8	0.70-0.76 0.75-0.85	0.20-0.40 0.20-0.40	0.20-0.40 0.20-0.40	3.75-4.25 3.75-4.50	1.80-2.20 1.80-2.40	0.70-1.00 0.70-1.00	13.50-14.50 13.25-14.75	4.25- 5.75			
M1	0.75-0.85	0.20-0.40	0.20-0.40	3.75-4.50	0.90-1.30	7.75-9.25	1.15-1.85				
M2	0.78-0.88	0.20-0.40	0.20-0.40	3.75-4.50	1.60-2.20	4.50-5.50	5.50-6.75				
M3	1.00-1.25	0.20-0.40	0.20-0.40	3.75-4.50	2.35-3.25	4.75-6.25	5.50-6.75				
M4	1.25-1.40	0.20-0.40	0.20-0.40	4.00-4.75	3.90-4.50	4.50-5.50	5.25-6.50				
M10	0.85-0.95	0.20-0.40	0.20-0.40	3.75-4.50	1.80-2.20	7.75-9.00					
M15	1.50-1.60	0.20-0.40	0.20-0.40	4.00-5.00	4.50-5.25	2.75-3.50	6.00-6.75	4.75- 5.25			
M30	0.77-0.85	0.20-0.40	0.20-0.40	3.50-4.25	1.00-1.40	7.75-9.00	1.30-2.30	4.50- 5.50			
M34	0.85-0.92	0.20-0.30	0.20-0.30	3.50-4.25	1.90-2.30	8.00-9.20	1.30-2.30	1.75 8.75			
01	0.85-0.95	1.00-1.30	0.20-0.40	0.40-0.60	0.30 max		0.40-0.60				
02	0.85-0.95	1.40-1.80	0.20-0.40	0.35	0.20	0.30					
06	1.35-1.55	0.30-1.00	0.80-1.20			0.20-0.30					
L6	0.65-0.75	0.30-0.80	0.20-0.40	0.65-0.85	0.20-0.35	0.20-0.35			1.25 1.75		
L7 T15	0.95-1.05 1.50-1.60	0.25-0.45	0.20-0.40	1.25-1.75 3.75-4.50	 4.75-5.25	0.30-0.50	 12.00-13.00	 4.75-5.25			
S1	0.45-0.55	0.20-0.40	0.25-0.45	1.25-1.75	0.15-0.30	0.40	1.0-3.0				
S2	0.45-0.55	0.30-0.50	0.80-1.20		0.25	0.40-0.60					
S5	0.50-0.60	0.60-0.90	1.80-2.20	0.30	0.25	0.30-0.50					
W5	1.05-1.25	0.15-0.35	0.10-0.40	0.40-0.60	0.25 max	0.30-0.50					

Table 7-3. Tool Steel Selection

MATERIAL TO BE CUT	TOTAL QUANTITY OF PARTS TO BE MADE 1,000	10,000	100,000
Aluminum, copper and magnesium alloys	W1, AIS14140	W1, 01, A2	01, A2
Carbon and alloy steels, ferritic stainless	W1, AIS14140	W1, 01, A2	01, A2
Stainless steel, austenitic	W1, A2	W1, A2, D2	A2, D2
Spring steel, hardened, Rockwell C52max	A2	A2, D2	D2
Electrical sheet, transformer grade	A2	A2, D2	D2
Paper, gaskets, and similar soft material	W1	W1	W1, A2
Plastic sheet, not reinforced	01	01	01, A2

Table 7-3 is listed for use as a guide reference in the selection of tool steel types for specific applications.

Table 7-4. Tool Steel Hardening and Tempering Temperatures

STEEL	HARDENING TREATMENT	TEMPERING TREATMENT	SIZE CHANGE, IN/IN
W	1450°F, Water	300°F	0.0017 - 0.0025
O	1450°F, Oil	300°F	0.0014 - 0.0021
L	1550°F, Oil	300°F	0.0014 - 0.0024
F	1600°F, Oil	300°F	0.0011 - 0.0021
S	1750°F, Oil	500°F	0.0010 - 0.0025
A	1775°F, Oil	500°F	0.0005 - 0.0015
D	1875°F, Oil	500°F	0.0005 - 0.0005
T	2350°F, Oil	1050°F	0.0006 - 0.0014
M	2225°F, Oil	1025°F	0.0016 - 0.0024

7-6. CLASS DESIGNATIONS.

W - Water hardening tool steels

S - Shock resisting tool steels

O - Cold work tool steels, oil hardening types

A - Cold work tool steels, air hardening types

7-7. APPLICATIONS OF TOOL STEELS.

7-8. The majority of tool steel applications can be divided into a small number of groups: cutting, shearing, forming, drawing, extrusion, rolling and battering. Cutting tools include drills, taps, broaches, hobs, lathe tools, etc. Shearing tools include shears, blanking and trimming dies, punches, etc. Forming tools include draw, forging, cold heading and die casting dies. Battering tools include chisels and all forms of shock tools. Most cutting tools require high hardness, high resistance to the softening effect of heat, and high wear resistance. Shearing tools require high wear resistance and fair toughness. Forming tools must possess high wear resistance or high toughness and strength. In battering tools, high toughness is most important.

7-9. SELECTION OF MATERIAL FOR A CUTTING TOOL. The selection of material for a cutting tool depends on several factors: the metal being machined, nature of cutting operation, condition of the machine tool, machining practice, size and design of tool, coolant to be used, and cost of tool material. Selection is usually based more on previous experience or applications than on an engineering or metallurgical analysis.

7-10. High speed cutting tools are usually manufactured from the class "T" or class "M" alloys. Four classes, T1, M1, M2 and M10 make up nearly 90% of the general purpose high speed steels. Certain special purpose steels in each class, such as T6, T7, T8 and T15 are advantageous for operations like milling cutters and prehardened forging die blocks.

7-11. High speed drills should possess high strength and toughness, notably M1, M2, M10 and T1. Classes T1 and M1 are used for tools subject to shock, while M2 and M10 are generally used where tools require less toughness and more abrasion resistance.

7-12. Material for reamers should be of high hardness and abrasion resistance, such as M1, M2, M10 and T1. The M3 and M15 and T15 classes possess greater abrasion resistance than the lower-vanadium grades.

7-13. Material for taps is generally of the M1, M2 or M10 types. In tapping heat-resisting alloys or steels harder than Rockwell C35, M15 or T15 may be justified.

7-14. Milling cutters are usually made from the high speed steels. As the hardness of the workpiece increases beyond Rockwell C35, the cobalt high speed steels should be used.

7-15. Recommended punch and die material for blanking parts from 0.050 inch sheet materials are shown in following table. This table does not cover all operations, and is a sample table intended for use as a guide only.

7-16. HEAT TREAT DATA.

NOTE

Additional Heat Treatment information is discussed in Section IX.

7-17. The thermal treatments listed in table 7-5 cover the generally used treatments for the forgings, normalizing, and annealing of tool and die steels. The thermal treatments listed in table 7-7 cover the usual ranges of temperatures for hardening and tempering tool and die steels. These tables are listed for use as a guide only, and test samples should be checked prior to use.

7-18. DISTORTION IN TOOL STEELS. Distortion is a general term encompassing all dimensional changes; the two main types being volume change or change in geometrical form. Volume change is defined as expansion or contraction and geometric change is defined as changes in curvature or angular relations. Table 7-4 shows an approximate range of size changes depending upon the type of tool steel, and also dependent on specific tempering and heat treatments. If a very close tolerance is required for a finished tool, specific data covering this item should be obtained from a detailed source.

7-19. Deleted

7-20. Deleted

7-21. Deleted

7-22. Deleted

7-23. Deleted

Table 7-5. Forging, Normalizing and Annealing Treatments of Tool and Die Steels

SAE DESIGNA-TION	FORGING/a			NORMALIZING/b		ANNEALING/c			
	HEAT SLOWLY TO	START FORGING AT	DO NOT FORGE BELOW	HEAT SLOWLY TO	HOLD AT	TEMPER-ATURE	MAX RATE OF COOL-ING F/HR	BRINELL HARDNESS APPROX.	ROCKWELL B, APPROX.
W1 (0.8C)	1450	1800 1950	1500	1450	1500	1400-1450	75	159-202	84-94
W1 (0.9C)	1450	1800 1950	1500	1450	1500	1375-1425	75	159-202	84-94
W1 (1.0C)	1450	1800 1900	1500	1450	1550	1400-1450	75	159-202	84-94
W1 (1.2C)	1450	1800 1900	1500	1450	1625	1400-1450	75	159-202	84-94
W2 (0.9C)	1450	1800 1900	1500	1450	1500	1375-1425	75	159-202	84-94
W2 (1.0C)	1450	1800 1900	1500	1450	1550	1400-1450	75	159-202	84-94
W3 (1.0C)	1450	1800 1900	1500	1450	1550	1400-1450	75	159-202	84-94
A2	1600	1850 2000	1650	DO NOT NORMALIZE		1550-1600	40	202-229	94-98
A6	1200-1300			DO NOT NORMALIZE				248	102
D2	1650	1850 2000	1650	DO NOT NORMALIZE		1600-1650	40	207-255	95-102
D3	1650	1850 2000	1650	DO NOT NORMALIZE		1600-1650	50	212-255	96-102
D5	1650	1850 2000	1650	DO NOT NORMALIZE		1600-1650	40	207-255	95-102
D7	1650	2050 2125	1800	DO NOT NORMALIZE		1600-1650	50	235-262	99-103
F3	1550	1800 2000	1600	DO NOT NORMALIZE		1475	50	235	99

Table 7-5. Forging, Normalizing and Annealing Treatments of Tool and Die Steels - Continued

SAE DESIGNA-TION	FORGING/a			NORMALIZING/b		ANNEALING/c			
	HEAT SLOWLY TO	START FORGING AT	DO NOT FORGE BELOW	HEAT SLOWLY TO	HOLD AT	TEMPER-ATURE	MAX RATE OF COOL-ING F/HR	BRINELL HARDNESS APPROX.	ROCKWELL B, APPROX.
H11	1650	1950 2100	1650	DO NOT NORMALIZE		1550-1600	50	192-229	92-98
H12	1650	1950 2100	1650	DO NOT NORMALIZE		1600-1650	50	192-229	92-98
H13	1650	1950 2100	1650	DO NOT NORMALIZE		1550-1600	50	192-229	92-98
H21	1600	2000 2150	1650	DO NOT NORMALIZE		1600-1650	50	202-235	94-99
T1	1600	1950 2100	1750	DO NOT NORMALIZE		1600-1650	50	217-255	96-102
T2	1600	2000 2150	1750	DO NOT NORMALIZE		1600-1650	50	223-255	97-102
T3	1925	2025	1750	DO NOT NORMALIZE		1650	50		
T4	1600	2000 2150	1750	DO NOT NORMALIZE		1600-1650	50	229-255	98-102
T5	1600	2000 2150	1800	DO NOT NORMALIZE		1600-1650	50	248-293	102-106
T6	1600	1950 2150	1700	DO NOT NORMALIZE		1600-1650	50	248-293	102-106
T7	1600	1950 2150	1700	DO NOT NORMALIZE		1550-1625	50	217-250	96-102
T8	1600	2000 2150	1750	DO NOT NORMALIZE		1600-1650	50	229-255	98-102
M1	1500	1900 2050	1700	DO NOT NORMALIZE		1525-1600	50	207-248	95-102
M2	1500	1950 2100	1700	DO NOT NORMALIZE		1550-1625	50	217-248	96-102

Table 7-5. Forging, Normalizing and Annealing Treatments of Tool and Die Steels - Continued

SAE DESIGNA-TION	FORGING/a			NORMALIZING/b		ANNEALING/c			
	HEAT SLOWLY TO	START FORGING AT	DO NOT FORGE BELOW	HEAT SLOWLY TO	HOLD AT	TEMPER-ATURE	MAX RATE OF COOL-ING F/HR	BRINELL HARDNESS APPROX.	ROCKWELL B, APPROX.
M3	1500	2000 2150	1700	DO NOT NORMALIZE		1550-1625	50	223-255	97-102
M4	1500	2000 2150	1700	DO NOT NORMALIZE		1550-1625	50	229-255	98-102
M10	1400	1900 2100	1700	DO NOT NORMALIZE		1600-1650	50	235-262	99-103
M15	1400	1900 2100	1700	DO NOT NORMALIZE		1600-1650	50	235-262	99-103
M30	1400	1900 2100	1600	DO NOT NORMALIZE		1600-1650	50	235-262	99-103
M34	1400	1900 2100	1600	DO NOT NORMALIZE		1600-1650	50	235-262	99-103
01	1500	1750 1900	1550	1500	1600	1425-1475	50	183-212	90-96
02	1500	1750 1900	1550	1500	1550	1375-1425	50	183-212	90-96
06	1500	1750 1900	1500	1500	1625	1425-1275	50	183-212	90-96
L6	1500	1800 2000	1600	1550	1650	1400-1450	50	183-212	90-96
L7	1500	1800 2000	1550	1550	1650	1450-1500	50	174-212	88-96
T15	1500	2000 2100	1600	DO NOT NORMALIZE		1600-1650	35	241-269	100-104
S1	1500	1800 2000	1600	DO NOT NORMALIZE		1450-1500	50	192-235	92-99

Table 7-5. Forging, Normalizing and Annealing Treatments of Tool and Die Steels - Continued

SAE DESIGNA-TION	FORGING/a			NORMALIZING/b		ANNEALING/c			
	HEAT SLOWLY TO	START FORGING AT	DO NOT FORGE BELOW	HEAT SLOWLY TO	HOLD AT	TEMPER-ATURE	MAX RATE OF COOL-ING F/HR	BRINELL HARDNESS APPROX.	ROCKWELL B, APPROX.
S2	1500	1900 2100	1600	1500-	1650	1400-1450	50	192-229	92-98
S5	1500	1900 2050	1600	1500	1600	1400-1450	50	192-229	92-98
W5	1200	1700 1900	1500	DO NOT NORMALIZE		1400-1425	50	192-212	92-96

a. The temperature at which to start forging is given as a range, the higher side of which should be used for large sections and heavy or rapid reductions, and the lower side for smaller sections and lighter reductions, as the alloy content of the steel increases, the time of soaking at forging temperature increases proportionately. Likewise, as the alloy content increases, it becomes more necessary to cool slowly from the forging temperature. With the very high alloy steels, such as high speed or air hardening steels, this slow cooling is imperative in order to prevent cracking and to leave the steel in a semi-soft condition. Either furnace cooling or burying in an insulating medium such as lime, mica, or silocel is satisfactory.

b. The length of time the steel is held after being uniformly heated through at the normalizing temperature, varies from about 15 minutes for a small section to about 1 hour for larger sizes. Cooling from the normalizing temperatures is done in still air. The purpose of normalizing after forging is to refine the grain structure and to produce a uniform structure throughout the forging. Normalizing should not be confused with low temperature (about 1200F) annealing used for the relief of redisual stresses resulting from heavy machining, bending and forming.

c. The annealing temperature is given as a range, the upper limit of which should be used for large sections, and the lower limit for smaller sections. The temperature varies from about 1 hour for light sections and small furnace charges of carbon or low alloy steel, to about 4 hours for heavy sections and large furnace charges of high alloy steel.

Table 7-6. Thermal Treatment for Hardening and Tempering Tool Steel - General

CLASS	QUENCH MEDIUM	PREHEAT TEMPERATURE F	HARDENING TEMPERATURE RANGE F	HARDNESS AFTER QUENCHING ROCKWELL C	TEMPERING TEMPERATURE RANGE F	HARDNESS AFTER TEMPERING ROCKWELL C	DECARBURIZATION (PREVENTION OF DURING HEAT TREATMENT)
W1-08	Water	-a	1420-1450	65-67	350-525	65-56	-b
W1-09	Water	-a	1420-1450	65-67	350-525	65-56	-b
W1-10	Water	-a	1420-1450	65-67	350-525	65-56	-b
W1-12	Water	-a	1420-1500	65-67	350-525	65-56	-b
W2-09	Water	-a	1420-1500	65-67	350-525	65-56	-b
W2-10	Water	-a	1420-1500	65-67	350-525	65-56	-b
W3-10	Water	-a	1420-1500	65-67	350-525	65-56	-b
A2	Air	1200-1300	1725-1775	61-63	400-700	60-57	-c
A6	Air	1200-1300	1525-1600	60			
D2	Air	1200-1300	1800-1875	61-63	400-700	60-58	-c
D3	Oil	1200-1300	1750-1800	62-64	400-700	62-58	-c
D5	Air	1200-1300	1800-1875	60-62	400-700	59-57	-c
D7	Air	1200-1300	1850-1950	63-65	300-500 850-1000	65-63 62-58	-c
F3	Water	-a	1550	62-66	300-500	66-62	-c
H-11	Air	1450-1500	1825-1875	53-55	1000-1100	51-43	-c
H12	Oil-Air	1450-1500	1800-1900	53-55	1000-1100	51-43	-c
H13	Air	1400-1450	1825-1575	53-55	1000-1100	51-43	-c
H21	Oil-Air	1500-1550	2100-2150	50-52	950-1150	50-47	-c
T1	Oil-Air-Salt	1500-1550	2300-2375	63-65	1025-1100	65-63	-c
T2	Oil-Air-Salt	1500-1550	2300-2375	63-65	1025-1100	63-65	-c
T3	Oil-Air	1500-1550	2275-2325		1000-1050	67-60	-c
T4	Oil-Air-Salt	1500-1550	2300-2375	63-65	1026-1100	65-63	-c
T5	Oil-Air-Salt	1500-1550	2300-2400	63-65	1050-1100	65-63	-c

Table 7-6. Thermal Treatment for Hardening and Tempering Tool Steel - General - Continued

CLASS	QUENCH MEDIUM	PREHEAT TEMPERATURE F	HARDENING TEMPERATURE RANGE F	HARDNESS AFTER QUENCHING ROCKWELL C	TEMPERING TEMPERATURE RANGE F	HARDNESS AFTER TEMPERING ROCKWELL C	DECARBURIZATION (PREVENTION OF DURING HEAT TREATMENT)
T6	Oil	1600	2350	60-65	1000-1100	65-60	-c
T7	Oil	1600	2325	60-65	1000-1100	65-60	-c
T8	Oil-Air-Salt	1500-1550	2300-2375	63-65	1025-1100	65-63	-c
M1	Oil-Air-Salt	1400-1500	2150-2250	63-65	1025-1100	65-63	-c
M2	Oil-Air-Salt	1450-1500	2175-2250	63-65	1025-1075	65-63	-c
M3	Oil-Air-Salt	1450-1500	2150-2225	63-65	1025-1075	65-63	-c
M4	Oil-Air-Salt	1450-1500	2150-2225	63-65	1025-1075	65-63	-c
M10	Oil	1400	2220	60-65	1000-1100	65-60	-c
M15	Oil	1400	2220	60-65	1000-1100	65-60	-c
M30	Oil	1400	2220	60-65	1000-1100	65-60	-c
M34	Oil	1400	2220	60-65	1000-1100	65-60	-c
01	Oil	-a	1450-1500	63-65	300-800	62-50	-b
02	Oil	-a	1420-1450	63-65	375-500	62-57	-b
06	Oil	-a	1450-1500	63-65	300-800	63-50	-b
L6	Oil	-a	1500-1600	62-64	400-800	62-48	-b
L7	Oil	-a	1525-1550	63-65	350-500	62-60	-b
T15	Oil-Air	1500-1600	2250-2300	65-66	1025-1100	66-68	-c
S1	Oil	1200-1300	1650-1800	57-59	300-1000	57-45	-c

Table 7-6. Thermal Treatment for Hardening and Tempering Tool Steel - General - Continued

CLASS	QUENCH MEDIUM	PREHEAT TEMPERATURE F	HARDENING TEMPERATURE RANGE F	HARDNESS AFTER QUENCHING ROCKWELL C	TEMPERING TEMPERATURE RANGE F	HARDNESS AFTER TEMPERING ROCKWELL C	DECARBURIZATION (PREVENTION OF DURING HEAT TREATMENT)
S2	Water-oil	-A	1550-1575 1660-1625	60-62 58-60	300-500 300-500	60-54 58-54	-b -b
S5	Water		1550-1600	60-62	300-650	60-54	-b
	Oil		1600-1675	58-60	300-650	58-54	-b
W5	Water	1100-1200	1400-1550	65-66	300-400	62-65	-b

a. For large tools and tools having intricate sections, preheating at 1050° to 1200° is recommended.

b. Use moderately oxidizing atmosphere in furnace or a suitable neutral salt bath.

c. Use protective pack from which volatile matter has been removed, carefully balanced neutral salt bath or atmosphere controlled furnaces. In the latter case, the furnace atmosphere should be in equilibrium with the carbon content of the steel being treated. Furnace atmosphere dew point is considered a reliable method of measuring and controlling this equilibrium.

Table 7-7. Comparison of Tool Steel Properties

CLASS	NON DEFORMING PROPERTIES	TOUGHNESS	RESISTANCE TO SOFTENING EFFECT OF HEAT	WEAR RESISTANCE	MACHINE ABILITY
W1-08	Poor	Good	Poor	Fair	Best
W1-09	Poor	Good	Poor	Fair	Best
W1-10	Poor	Good	Poor	Good	Best
W1-12	Poor	Good	Poor	Good	Best
W2-09	Poor	Good	Poor	Fair	Best
W2-10	Poor	Good	Poor	Good	Best
W3-10	Poor	Good	Poor	Good	Best
A2	Best	Fair	Fair	Good	Fair
A6	Good	Fair	Poor	Good	Fair
D2	Best	Fair	Fair	Best	Poor
D3	Good	Poor	Fair	Best	Poor
D5	Best	Fair	Fair	Best	Poor
D7	Best	Poor	Fair	Best	Poor
F3	Poor	Poor	Poor	Best	Fair
H11	Good	Good	Good	Fair	Fair
Hl2	Good	Good	Good	Fair	Fair
Hl3	Good	Good	Good	Fair	Fair
H21	Good	Good	Good	Fair	Fair
T1	Good	Poor	Good	Good	Fair
T2	Good	Poor	Good	Good	Fair
T3	Good	Poor	Good	Good	Fair
T4	Good	Poor	Best	Good	Fair
T5	Good	Poor	Best	Good	Fair
T6	Good	Fair	Good	Best	Fair
T7	Good	Poor	Good	Best	Fair
T8	Good	Poor	Best	Good	Fair
M1	Good	Poor	Good	Good	Fair
M2	Good	Poor	Good	Good	Fair
M3	Good	Poor	Good	Best	Fair
M4	Good	Poor	Good	Best	Fair
M10	Good	Poor	Good	Best	Fair
M15	Good	Poor	Good	Best	Fair
M30	Good	Poor	Good	Best	Fair
M34	Good	Poor	Good	Best	Fair
01	Good	Fair	Poor	Good	Good

Table 7-7. Comparison of Tool Steel Properties - Continued

CLASS	NON DEFORMING PROPERTIES	TOUGHNESS	RESISTANCE TO SOFTENING EFFECT OF HEAT	WEAR RESISTANCE	MACHINE ABILITY
02	Good	Fair	Poor	Good	Good
06	Fair	Fair	Poor	Good	Best
L6	Fair	Fair	Poor	Fair	Fair
L7	Fair	Fair	Poor	Good	Fair
T15	Good	Poor	Best	Best	Fair
S1	Fair	Good	Fair	Fair	Fair
S2	W-Poor O-Fair	Best	Fair	Fair	Good
S5	W-Poor O-Fair	Good	Poor	Fair	Best
W5	Poor	Good	Poor	Fair	Best

SECTION VIII

TESTING AND INSPECTION

HARDNESS TESTING

8-1. GENERAL.

8-2. Hardness testing is used to determine the results of heat treatment as well as the state of the metal prior to heat treatment. Its application in determining the approximate tensile strength of the material by use of a hardness-tensile strength table is very limited and should only be used in the case of ferrous (steel) alloys. Table 8-1 should be used only as a conversion table for converting the various hardness values from one type of test to another, and should not be used as an indication of tensile strength for alloys other than ferrous. In addition, it should be realized that values given in Table 8-1 are only approximate. Whenever a specific type of hardness test is given in a drawing, specification, etc., necessary hardness readings should be made by that test whenever possible, rather than by other means, and a conversion made. In obtaining hardness values, precaution must be taken to assure removal of cladding and decarburized surface layers from area to be tested.

8-3. METHODS OF HARDNESS TESTING.

8-4. The methods of hardness testing in general use are: Brinell, Rockwell, Vickers (British), Tukon and Shore scleroscope.

8-5. BRINELL HARDNESS TEST. This test consists of pressing a hardened steel ball into a flat surface of the metal being tested by the application of a known pressure. The impression made by the ball is measured by means of a microscope with a micrometer eyepiece. The Brinell "number" is obtained by dividing the load in kilograms by the area of the spherical impression made by the ball, measured in square millimeters. The thickness of all samples used for testing must be sufficient to prevent bulging on the under side.

8-6. Brinell Tester. The Brinell tester (Figure 8-1) consists of the following major parts:

a. An elevating screw and anvil for bringing the sample into contact with the ball.

b. A manually operated hydraulic pump for applying the pressure to the hardened steel ball, which is mounted on its actuating member.

c. A pressure gage for determining the applied pressure.

d. A release mechanism with micrometer eyepiece for calculating the area of the impression.

8-7. Making The Brinell Test. The test is preformed as follows:

a. Prepare the sample by filing, grinding, and polishing to remove all scratches and variations that may affect the reading.

b. Place the sample on the anvil of the machine and elevate until the hardened ball contacts the surface to be tested.

c. Apply the load by pumping handle.

NOTE

A load of 3,000 kilograms is required for steel, while 500 kilograms is used when testing the softer metals, such as aluminum alloy, brass, and bronze. Normally, the load should be applied for 30 seconds. Although this period may be increased to 1 minute for extremely hard steels, in order to produce equilibrium.

d. Release the pressure and measure the area of impression with the calibrated microscope.

e. Calculate the Brinell number, completing the test.

8-8. ROCKWELL HARDNESS TEST. The Rockwell hardness test is based on the degree of penetration of a specifically designed indentor into a material under a given static load. The indentor/penetrator used may be either a diamond or hardened steel ball. The diamond indentor called a "brale" is precision ground and polished and the shape is spheroconica. The steel ball for normal use is 1/16 inch diameter, however, other larger diameter steel balls such as 1/8, 1/4 or 1/2 inch may be used for testing soft metals. The selection of the ball is based on the hardness range of the type of materia1 to be tested.

8-9. The Rockwell machine/tester for accomplishing the hardness test applies two loads to obtain the controlled penetration and indicates results on a graduated dial (see Figure 8-2). A minor load of 10 kilograms is first applied to seat the penetrator in the surface of the test specimen. The actual penetration is then produced by applying a major

load, subsequently, releasing and then reading hardness number from the dial. The dial reading is related to the depth of penetration, load and the penetrator used. The shallower the penetration, the higher the hardness value number for given indentor and load. The normal major load is 150 kilograms ("C" Scale) when using the diamond penetrator and 100 kilograms ("B"Scale) when using a 1/16 inch steel ball. A hardness value indicated by a number alone is incomplete. The number must be prefixed with a letter to indicate the load and indentor used to obtain the number. There is a variety of combinations of indentors and loads used to obtain a hardness value in accordance with hardness range of various material. The combinations are listed in Table 8-2 which is based on Specification ASTM E-18.

8-10. Review of Table 8-2 will reveal that the Red Dial Numerals "B" scale are used for steel ball indentors regardless of size of ball or load and Black Figure "C" scales are used for the diamond penetrator. When the readings fall below the hardness value, C20 (B98) the material is considered too soft for the diamond cone and 1/16 inch or larger hardened ball should be used. The diamond cone must be used for all hard materials (those above 100 on the "B"scale) as the steel ball may be deformed by the test. If in doubt about the hardness of a material start with the diamond penetrator and switch to the steel ball if the material is below C20-C22.

8-11. Rockwell Test Procedure: The procedure for making the Rockwell test is outlined as follows: (See Figure 8-2 for machine illustrations.)

a. Prepare the sample by removing (file, grind and polish) scale, oxide films, pits, variations and foreign material that may affect the reading. The surface should be flat, of one thickness and no bludge should be opposite the indentation.

NOTE

Do not perform test closer than 1/8″ from edge of specimen to assure accurate reading.

b. Select the proper anvil and penetrator and place proper weight on the weight pan.

c. Check trip lever for proper location. Lever should be located in the OFF LOAD position.

d. Place the test specimen on the anvil and by turning the hand wheel, raise it slowly (do not crash) until contact is made with the penetrator. On the older model continue turning until pointer of the indicator has made three revolutions and is within five divisions (plus or minus) of the upright position. On the newer model after contact, continue turning hand wheel until the small pointer is nearly vertical and slightly to right of the dot. Then watching the long pointer, raise specimen until long pointer is approximately upright within three degrees (plus or minus) of C-0. K the C=+3 degrees position is overshot, lower the specimen and start over. When the pointer is within three divisions of C-0, set dial to zero. After this step is complete, the minor load has been applied.

e. Apply the major load by tripping the trip lever. Trip the lever, do not push.

f. When the trip lever comes to rest and there is no further movement of pointer, return lever to the original position and read the hardness number indicated by the dial. When dial pointer indicates a fraction, use next lower whole number for the reading.

8-12. All hardness tests should be made on a single thickness to obtain accurate results. In testing curved specimens, the concave side should face the indentor; if reversed, an inaccurate reading will result due to flatening of the piece on the anvil. Specimens that do not balance on the anvil because of overhang should be properly supported to obtain accurate readings and to prevent damaging the penetrator. Also to obtain a true indication of hardness of a given part, several readings (3-6 is usually sufficient) at different points should be taken and averaged. If it is necessary to determine the condition of the interior, parts should be cut by some method that does not appreciably change the temper/ condition, such as using a water-cooled saw-off wheel. When testing clad material; the clad coat shall be removed. Specimen samples of clad and other materials should be provided when possible. It is not desirable to accomplish the test on the finished part.

Table 8-1. Hardness Conversion Chart

FOR HARDENED STEEL AND HARD ALLOYS

SCALE									
C	A	D	15-N	30-N	45-N	VICKERS[1]	Brinell Hultgren 10 mm Ball	G Rockwell Test 1/16" Ball	SHORE
Rockwell Hardness Tester			Rockwell Superficial[2]						
Penetrator									
"Brale"			"N Brale"						
Load (kg.)									
150	60	100	15	30	45	10	3000	150	
80	92.0	86.5	96.5	92.0	87.0	1865	.....	.....	...
79	91.5	85.5	.....	91.5	86.5	1787	.....	.....	...
78	91.0	84.5	96.0	91.0	85.5	1710	.....	.....	...
77	90.5	84.0	.....	90.5	84.5	1633	.....	.....	...
76	90.0	83.0	95.5	90.0	83.5	1556	.....	.....	...
75	89.5	82.5	.....	89.0	82.5	1478	.....	.....	...
74	89.0	81.5	95.0	88.5	81.5	1400	.....	.....	...
73	88.5	81.0	.....	88.0	80.5	1323	.....	.....	...
72	88.0	80.0	94.5	87.0	79.5	1245	.....	.....	...
71	87.0	79.5	.....	86.5	78.5	1160	.....	.....	...
70	86.5	78.5	94.0	86.0	77.5	1076	.....	.....	...
69	86.0	78.0	93.5	85.0	76.5	1004	.....	.....	...
68	85.5	77.0	.....	84.5	75.5	942	.....	.....	96
67	85.0	76.0	93.0	83.5	74.5	894	.....	.....	94
66	84.5	75.5	92.5	83.0	73.0	854	.....	.....	...
65	84.0	74.5	92.0	82.0	72.0	820	.....	.....	92
64	83.5	74.0	.....	81.0	71.0	789	.....	.....	...
63	83.0	73.0	91.5	80.0	70.0	763	.....	.....	89
62	82.5	72.5	91.0	79.0	69.0	739	.....	.....	86
61	81.5	71.5	90.5	78.5	67.5	716	.....	.....	...
60	81.0	71.0	90.0	77.5	66.5	695	614	.....	84
59	80.5	70.0	89.5	76.5	65.5	675	600	.....	...
58	80.0	69.0	.....	75.5	64.0	655	587	.....	81
57	79.5	68.5	89.0	75.0	63.0	636	573	.....	...
56	79.0	67.5	88.5	74.0	62.0	617	560	.....	78
55	78.5	67.0	88.0	73.0	61.0	598	547	.....	75
54	78.0	66.0	87.5	72.0	59.5	580	534	.....	...
53	77.5	65.5	87.0	71.0	58.5	562	522	.....	73
52	77.0	64.5	86.5	70.5	57.5	545	509	.....	...
51	76.5	64.0	86.0	69.5	56.0	528	496	.....	71
50	76.0	63.0	85.5	68.5	55.0	513	484	.....	68
49	75.5	62.0	85.0	67.5	54.0	498	472	.....	...
48	74.5	61.5	84.5	66.5	52.5	485	460	.....	66
47	74.0	60.5	84.0	66.0	51.5	471	448	.....	64
46	73.5	60.0	83.5	65.0	50.0	458	437	.....	62
45	73.0	59.0	83.0	64.0	49.0	446	426	.....	...
44	72.5	58.5	82.5	63.0	48.0	435	415	.....	60
43	72.0	57.5	82.0	62.0	46.5	424	404	.....	58
42	71.5	57.0	81.5	61.5	45.5	413	393	.....	56
41	71.0	56.0	81.0	60.5	44.5	403	382	.....	54
40	70.5	55.5	80.5	59.5	43.0	393	372	.....	...
39	70.0	54.5	80.0	58.5	42.0	383	362	.....	52
38	69.5	54.0	79.5	57.5	41.0	373	352	.....	51
37	69.0	53.0	79.0	56.5	39.5	363	342	.....	49
36	68.5	52.5	78.5	56.0	38.5	353	332	.....	48
35	68.0	51.5	78.0	55.0	37.0	343	322	.....	46
34	67.5	50.5	77.0	54.0	36.0	334	313	.....	45
33	67.0	50.0	76.5	53.0	35.0	325	305	.....	...
32	66.5	49.0	76.0	52.0	33.5	317	297	.....	43
31	66.0	48.5	75.5	51.5	32.5	309	290	.....	42
30	65.5	47.5	75.0	50.5	31.5	301	283	92.0	41
29	65.0	47.0	74.5	49.5	30.0	293	276	91.0	40
28	64.5	46.0	74.0	48.5	29.0	285	270	90.0	38
27	64.0	45.5	73.5	47.5	28.0	278	265	89.0	37
26	63.5	44.5	72.5	47.0	26.5	271	260	88.0	36
25	63.0	44.0	72.0	46.0	25.5	264	255	87.0	35
24	62.5	43.0	71.5	45.0	24.0	257	250	86.0	34
23	62.0	42.5	71.0	44.0	23.0	251	245	84.5	33
22	61.5	41.5	70.5	43.0	22.0	246	240	83.5	32
21	61.0	41.0	70.0	42.5	20.5	241	235	82.5	32
20	60.5	40.0	69.5	41.5	19.5	236	230	81.0	31

[1] 4 sided 136° Diamond Pyramid, 10 kg. Load. Measurement of 2 diagonals by microscope.

FOR UNHARDENED STEEL, STEEL OF SOFT TEMPER, GREY AND MALLEABLE CAST IRON AND MOST NON-FERROUS METAL

SCALE											
B	F	G	15-T	30-T	45-T	E	K	A	Brinell		SHORE
Rockwell Hardness Tester			Rockwell Superficial[2]			Rockwell Hardness Tester			Standard Type		
Ball Penetrator											
1/16			1/16			1/8		Brale	10 mm		
Load (kg.)											
100	60	150	15	30	45	100	150	60	500	3000	
100	.....	82.5	93.0	82.0	72.0	.....	.....	61.5	201	240	33
99	.....	81.0	92.5	81.5	71.0	.....	.....	61.0	195	234	32
98	.....	79.0	.....	81.0	70.0	.....	.....	60.0	189	228	32
97	.....	77.5	92.0	80.5	69.0	.....	.....	59.5	184	222	31
96	.....	76.0	.....	80.0	68.0	.....	.....	59.0	179	216	30
95	.....	74.0	91.5	79.0	67.0	.....	.....	58.0	175	210	30
94	.....	72.5	.....	78.5	66.0	.....	.....	57.5	171	205	29
93	.....	71.0	91.0	78.0	65.5	.....	.....	57.0	167	200	28
92	.....	69.0	90.5	77.5	64.5	.....	100	56.5	163	195	28
91	.....	67.5	.....	77.0	63.5	.....	99.5	56.0	160	190	27
90	.....	66.0	90.0	76.0	62.5	.....	98.5	55.5	157	185	27
89	.....	64.0	89.5	75.5	61.5	.....	98.0	55.0	154	180	25
88	.....	62.5	.....	75.0	60.5	.....	97.0	54.0	151	176	25
87	.....	61.0	89.0	74.5	59.5	.....	96.5	53.5	148	172	24
86	.....	59.0	88.5	74.0	58.5	.....	95.5	53.0	145	169	24
85	.....	57.5	.....	73.5	58.0	.....	94.5	52.5	142	165	23
84	.....	56.0	88.0	73.0	57.0	.....	94.0	52.0	140	162	23
83	.....	54.0	87.5	72.0	56.0	.....	93.0	51.0	137	159	23
82	.....	52.5	.....	71.5	55.0	.....	92.0	50.5	135	156	23
81	.....	51.0	87.0	71.0	54.0	.....	91.0	50.0	133	153	22
80	.....	49.0	86.5	70.0	53.0	.....	90.5	49.5	130	150	22
79	.....	47.5	.....	69.5	52.0	.....	89.5	49.0	128	147	21
78	.....	46.0	86.0	69.0	51.0	.....	88.5	48.5	126	144	21
77	.....	44.0	85.5	68.0	50.0	.....	88.0	48.0	124	141	20
76	.....	42.5	.....	67.5	49.0	.....	87.0	47.0	122	139	...
75	99.5	41.0	85.0	67.0	48.5	.....	86.0	46.5	120	137	...
74	99.0	39.0	.....	66.0	47.5	.....	85.0	46.0	118	135	...
73	98.5	37.5	84.5	65.5	46.5	.....	84.5	45.5	116	132	...
72	98.0	36.0	84.0	65.0	45.5	.....	83.5	45.0	114	130	...
71	97.5	34.5	.....	64.0	44.5	100	82.5	44.5	112	127	...
70	97.0	32.5	83.5	63.5	43.5	99.5	81.5	44.0	110	125	...
69	96.0	31.0	83.0	62.5	42.5	99.0	81.0	43.5	109	123	...
68	95.5	29.5	.....	62.0	41.5	98.0	80.0	43.0	107	121	...
67	95.0	28.0	82.5	61.5	40.5	97.5	79.0	42.5	106	119	...
66	94.5	26.5	82.0	60.5	39.5	97.0	78.0	42.0	104	117	...
65	94.0	25.0	.....	60.0	38.5	96.0	77.5	.....	102	116	...
64	93.5	23.5	81.5	59.5	37.5	95.5	76.5	41.5	101	114	...
63	93.0	22.0	81.0	58.5	36.5	95.0	75.5	41.0	99	112	...
62	92.0	20.5	.....	58.0	35.5	94.5	74.5	40.5	98	110	...
61	91.5	19.0	80.5	57.0	34.5	93.5	74.0	40.0	96	108	...
60	91.0	17.5	.....	56.5	33.5	93.0	73.0	39.5	95	107	...
59	90.5	16.0	80.0	56.0	32.0	92.5	72.0	39.0	94	106	...
58	90.0	14.5	79.5	55.0	31.0	92.0	71.0	38.5	92	104	...
57	89.5	13.0	.....	54.5	30.0	91.0	70.5	38.0	91	103	...
56	89.0	11.5	79.0	54.0	29.0	90.5	69.5	.....	90	101	...
55	88.0	10.0	78.5	53.0	28.0	90.0	68.5	37.5	89	100	...
54	87.5	8.5	.....	52.5	27.0	89.5	68.0	37.0	87	.....	...
53	87.0	7.0	78.0	51.5	26.0	89.0	67.0	36.5	86	.....	...
52	86.5	5.5	77.5	51.0	25.0	88.0	66.0	36.0	85	.....	...
51	86.0	4.0	.....	50.5	24.0	87.5	65.0	35.5	84	.....	...
50	85.5	2.5	77.0	49.5	23.0	87.0	64.5	35.0	83	.....	...

ROCKWELL B NUMBERS ABOVE 100[3]

SCALE

BRINELL Ball Dia.	BRINELL No.	B Rockwell	BRINELL Ball Dia.	BRINELL No.	B Rockwell	BRINELL Ball Dia.	BRINELL No.	B Rockwell
3.15	375	110	3.40	321	108	3.65	277	104
3.20	363	110	3.45	311	107	3.70	269	104
3.25	352	109	3.50	302	107	3.75	262	103
3.30	341	109	3.55	293	106	3.80	255	102
3.35	331	108	3.60	285	105	3.85	248	101

SCALE									
B	F	15-T	30-T	45-T	E	H	K	A	Brinell
Rockwell Hardness Tester		Rockwell Superficial[2]			Rockwell Hardness Tester				
Ball Penetrator									
1/16		1/16			1/8			Brale	10 mm
Load (kg.)									
100	60	15	30	45	100	60	150	60	500
50	85.5	77.0	49.5	23.0	87.0	.....	64.5	35.0	83
49	85.0	76.5	49.0	22.0	86.5	.....	63.5	.....	82
48	84.5	.....	48.5	20.5	85.5	.....	62.5	34.5	81
47	84.0	76.0	47.5	19.5	85.0	.....	61.5	34.0	80
46	83.0	75.5	47.0	18.5	84.5	.....	61.0	33.5	...
45	82.5	.....	46.0	17.5	84.0	.....	60.0	33.0	79
44	82.0	75.0	45.5	16.5	83.5	.....	59.0	32.5	78
43	81.5	74.5	45.0	15.5	82.5	.....	58.0	32.0	77
42	81.0	.....	44.0	14.5	82.0	.....	57.5	31.5	76
41	80.5	74.0	43.5	13.5	81.5	.....	56.5	31.0	75
40	79.5	73.5	43.0	12.5	81.0	.....	55.5	.....	...
39	79.0	.....	42.0	11.0	80.0	.....	54.5	30.5	74
38	78.5	73.0	41.5	10.0	79.5	.....	54.0	30.0	73
37	78.0	72.5	40.5	9.0	79.0	.....	53.0	29.5	72
36	77.5	.....	40.0	8.0	78.5	100	52.0	29.0	...
35	77.0	72.0	39.5	7.0	78.0	99.5	51.5	28.5	71
34	76.5	71.5	38.5	6.0	77.0	99.0	50.5	28.0	70
33	75.5	.....	38.0	5.0	76.5	.....	49.5	.....	69
32	75.0	71.0	37.5	4.0	76.0	98.5	48.5	27.5	...
31	74.5	.....	36.5	3.0	75.5	98.0	48.0	27.0	68
30	74.0	70.5	36.0	2.0	75.0	.....	47.0	26.5	67
29	73.5	70.0	35.5	1.0	74.0	97.5	46.0	26.0	...
28	73.0	.....	34.5	.....	73.5	97.0	45.0	25.5	66
27	72.5	69.5	34.0	.....	73.0	96.5	44.5	25.0	...
26	72.0	69.0	33.0	.....	72.5	.....	43.5	24.5	65
25	71.0	.....	32.5	.....	72.0	96.0	42.5	.....	64
24	70.5	68.5	32.0	.....	71.0	95.5	41.5	24.0	...
23	70.0	68.0	31.0	.....	70.5	.....	41.0	23.5	63
22	69.5	.....	30.5	.....	70.0	95.0	40.0	23.0	...
21	69.0	67.5	29.5	.....	69.5	94.5	39.0	22.5	62
20	68.5	.....	29.0	.....	68.5	.....	38.0	22.0	...
19	68.0	67.0	28.5	.....	68.0	94.0	37.5	21.5	61
18	67.0	66.5	27.5	.....	67.5	93.5	36.5	.....	...
17	66.5	.....	27.0	.....	67.0	93.0	35.5	21.0	60
16	66.0	66.0	26.0	.....	66.5	.....	35.0	20.5	...
15	65.5	65.5	25.5	.....	65.5	92.5	34.0	20.0	59
14	65.0	.....	25.0	.....	65.0	92.0	33.0	.....	...
13	64.5	65.0	24.0	.....	64.5	.....	32.0	.....	58
12	64.0	64.5	23.5	.....	64.0	91.5	31.5	.....	...
11	63.5	.....	23.0	.....	63.5	91.0	30.5	.....	...
10	63.0	64.0	22.0	.....	62.5	90.5	29.5	.....	57
9	62.0	.....	21.5	.....	62.0	.....	29.0	.....	...
8	61.5	63.5	20.5	.....	61.5	90.0	28.0	.....	...
7	61.0	63.0	20.0	.....	61.0	89.5	27.0	.....	56
6	60.5	.....	19.5	.....	60.5	.....	26.0	.....	...
5	60.0	62.5	18.5	.....	60.0	89.0	25.5	.....	55
4	59.5	62.0	18.0	.....	59.0	88.5	24.5	.....	...
3	59.0	.....	17.0	.....	58.5	88.0	23.5	.....	...
2	58.0	61.5	16.5	.....	58.0	.....	23.0	.....	54
1	57.5	61.0	16.0	.....	57.5	87.5	22.0	.....	...
0	57.0	.....	15.0	.....	57.0	87.0	21.0	.....	53

[2] The 15-T, 30-T, 45-T, 15-N, 30-N and 45-N values are in scales having lighter loads and more sensitive depth readings system, used where for one or another reason the indentation must be exceptionally shallow.

[3] The Rockwell B numbers above 100, as shown, are somewhat above the practical range of usefulness, as the Rockwell B versus Brinell hardness curve is very steep in this section, making the Brinell differences per unit change in Rockwell B reading quite large and subject to appreciable inaccuracy.

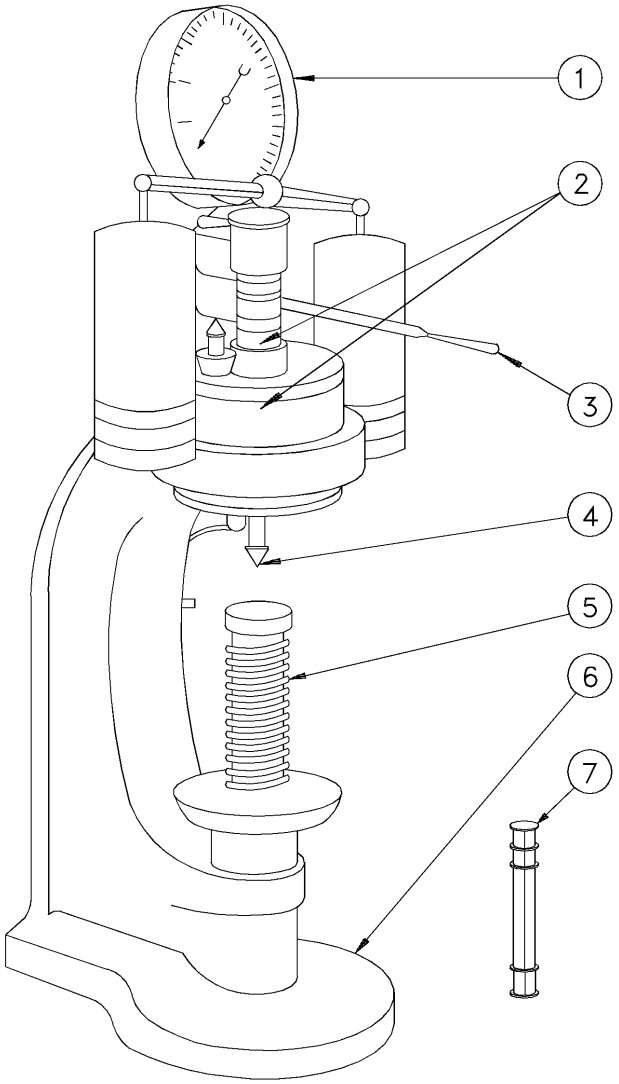

1. Gage indicating applied pressure
2. Hydraulic actuating unit
3. Lever for applying pressure
4. Hardened steel ball
5. Elevating screw
6. Base
7. Calibrated microscope

L9805661

Figure 8-1. Brinell Hardness Tester

8-13. The Rockwell testers are equipped with various anvils and indentors. Typical anvils and attachments are shown in Figure 8-3. The anvil(s) should be properly selected to accomplish the job. The tester should also be properly set and in good working order before making any test. The table on which the Rockwell tester is mounted must be rigid and not subject to any vibration if accurate results are to be obtained.

8-14. The accuracy of the Rockwell hardness tester should be checked regularly. Test blocks are available for testing all ranges of hardness. If the error in the tester is more than ±2 hardness numbers, it should be re-calibrated. The dashpot should be checked or oil and properly adjusted for completion of travel. The ball indentor and diameter should also be checked regularly for bluntness and chipping and replaced as required.

8-15. VICKERS PYRAMID HARDNESS TEST. The Vickers pyramid hardness test(Figure 8-4) covers a normal range of loading from 2.5 to 127.5 kilograms. However, for special applications such as the hardness testing of thin, soft materials, loads as low as 50 to 100 grams may be used. This test is made by pressing a square base diamond indentor into a flat surface of the metal being tested by the application of known pressure. The indentation left by the indentor is a square, the diagonal of which remains the hardness of the metal. The diagonal of the square impression is measured by a microscope which reads directly to 0.001 millimeters on a large micrometer drum. With the standard pyramidal diamond indentor (Figure 8-5) having an angle of 136° between opposite face of the pyramid, the pyramidal hardness number is determined by dividing the applied load in kilograms by the pyramidal area of the impression in square millimeters by the formula,

$$\text{Hardness } \frac{1.854 \text{ applied load in kilograms}}{\text{square of the diagonal of impression}}$$

or from correlation tables accompanying the tester.

Rapid readings may be taken by means of three knife edges in the field of the eye-piece. The first knife edge is fixed; the second knife is movable through a micrometric screw connected to a counter. The third knife edge, moved by means of a special screw, may be used if rapid reading of values to specified limits is desired. This method of testing is highly flexible and permits testing for very high hardness values. In the Amsler-Vickers variation of this hardness tester the surface of the material to be tested, at which the indentor contacts may be thrown on a ground-glass screen directly in front of the operator, allowing the length of the diagonals to be read directly.

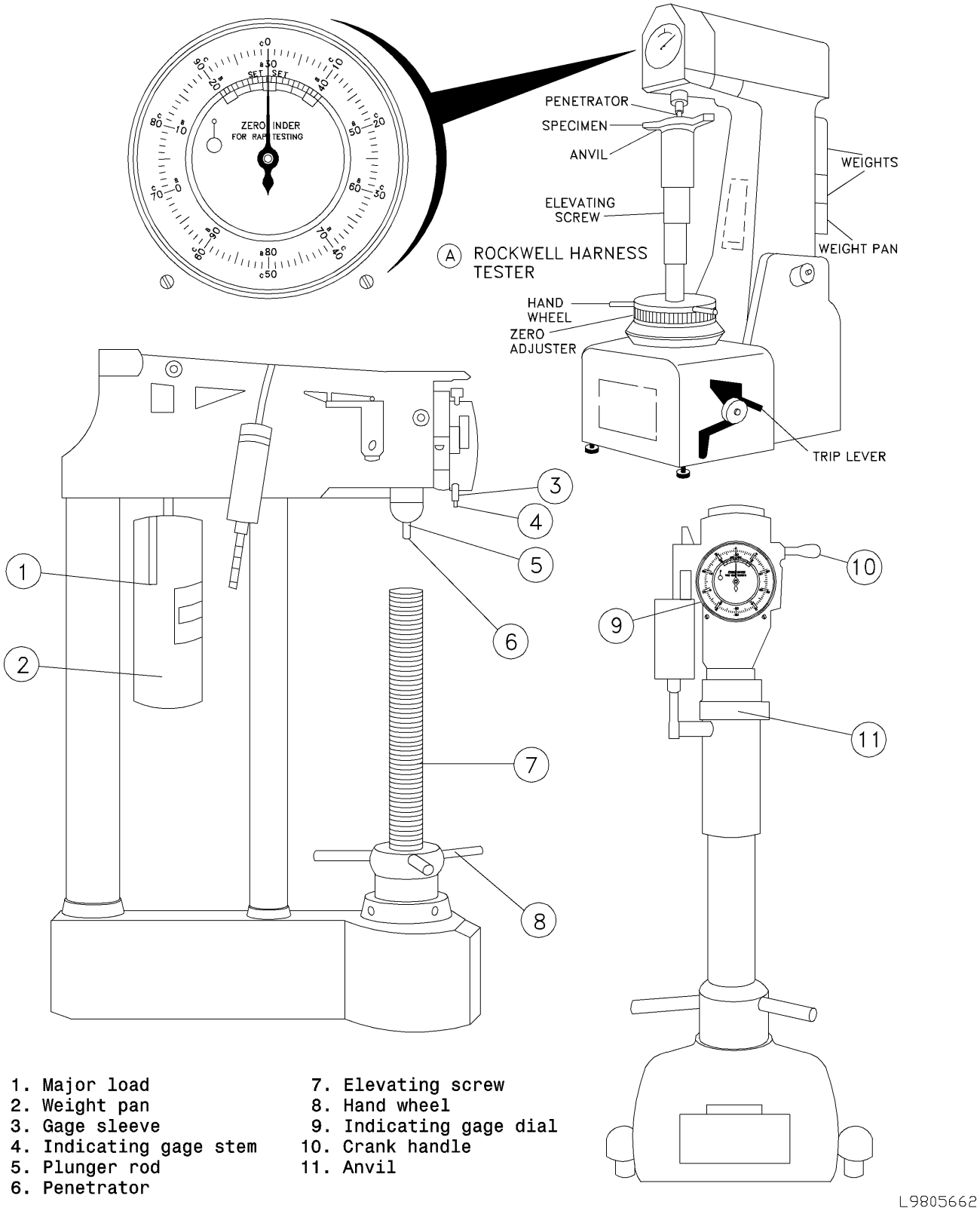

1. Major load
2. Weight pan
3. Gage sleeve
4. Indicating gage stem
5. Plunger rod
6. Penetrator
7. Elevating screw
8. Hand wheel
9. Indicating gage dial
10. Crank handle
11. Anvil

Figure 8-2. Rockwell Hardness Tester

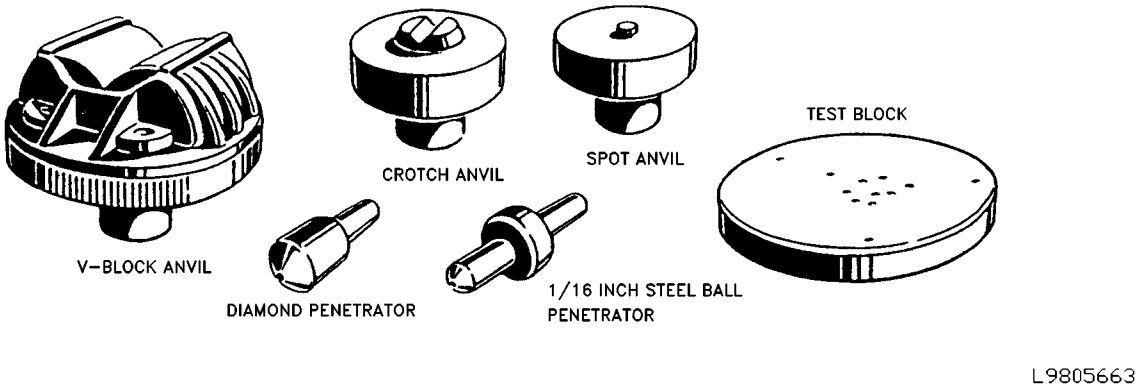

Figure 8-3. Attachments for Rockwell Tester

8-16. Vickers Tester. The Vickers tester consists of the following major parts:

a. Table for supporting the metal to be tested.

b. A lever with a 20 to 1 ratio through which a load is applied through a rod to an indentor at the end of a tube moving up and down in a vertical position.

c. A frame containing a control in which a plunger moves up and down vertically under the influence of a cam which applies and releases the test load. The cam is mounted on a drum and when the starting handle is depressed, the whole is rotated by a weight attached to a flexible cable, the speed of rotation being controlled by a piston and dashpot of oil. The mechanism provides for a slow and diminishing rate of application for the last portion of the load.

d. A foot pedal, which when depressed, returns the cam, drum and weight to their original positions, thus cocking the mechanism and preparing the instrument for another test.

e. A tripper, which supports the beam during the return of the cam, weight and drum. The tripper also released the lever for load applications.

f. A medium-power compound microscope for measuring the indentation across the diagonal of a square.

8-17. Making The Vickers Test. The test is applied as follows (See figure 8-4):

a. Prepare the sample by smooth grinding or polishing to remove all scratches and variations that may affect the readability of the indentation.

b. Place the test piece (6) on the testing table (5) and turn the table elevating wheel (1) until the indentor (7) fails to contact the metal being tested.

CAUTION

Sudden contact of the indentor and the material under test should be avoided to prevent possible injury to the diamond point.

c. Depress the load trip level (8) applying the load. The duration of the load application is fixed by the manufacturers at 10 to 30 seconds, the time being determined by the rate at which oil is allowed to bleed out of the dashpot. The load is fully applied, the indentor is automatically released.

d. Elevate the indentor by turning the wheel. Lower the testing table by reversing the table elevating wheel.

e. Swing the microscope (10) into place until locked.

f. View the impression of the indentation in the form of a square in the field shown by the eyepiece.

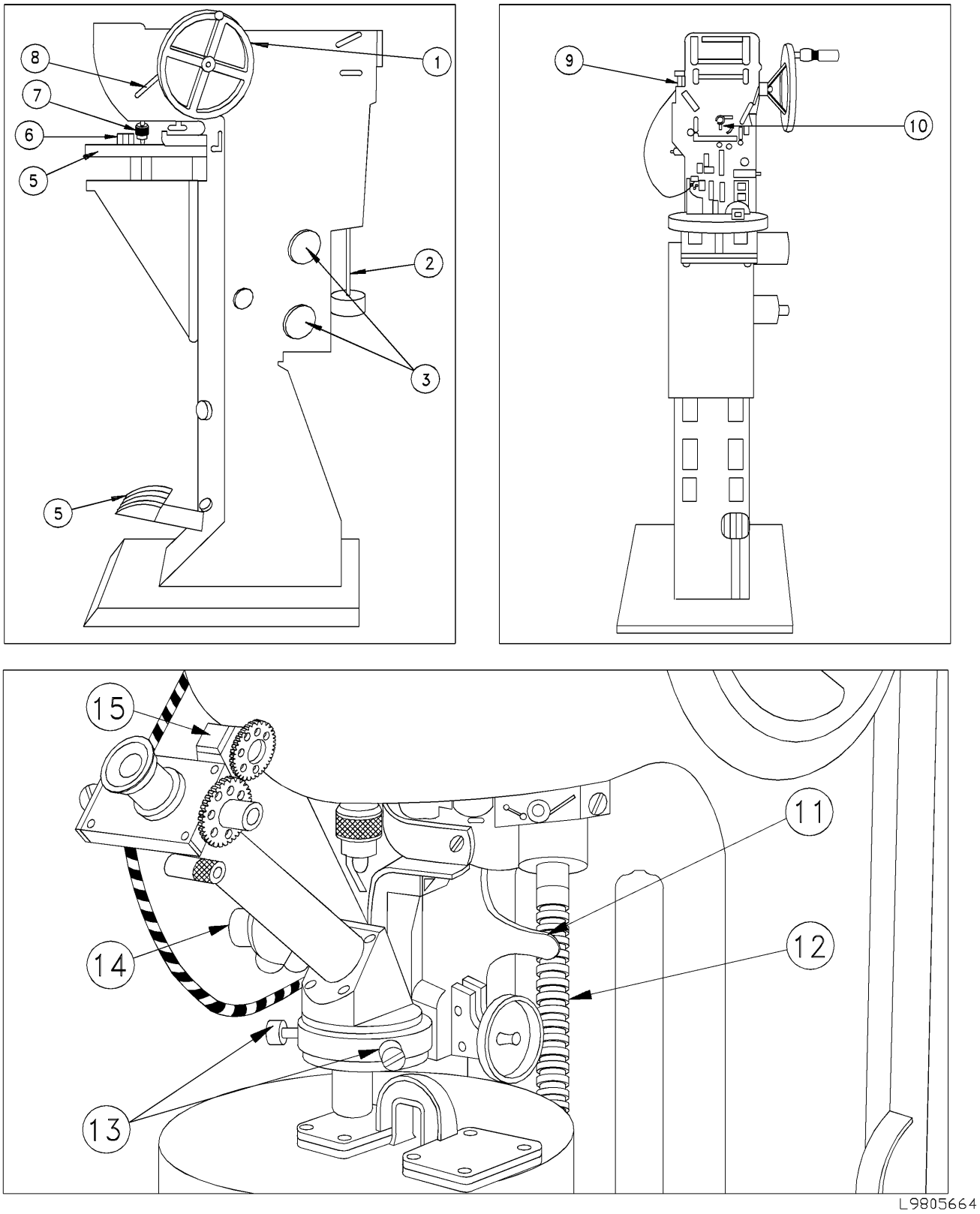

Figure 8-4. Vickers Pyramid Hardness Tester

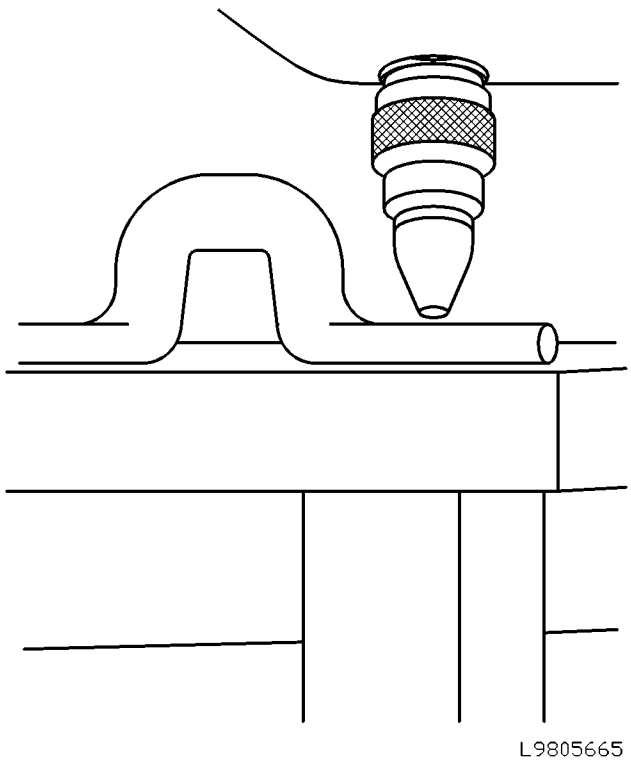

Figure 8-5. Standard Pyramid Diamond Indentor

g. Bring the left corner of the impression, by means of the centering screws (13) to a point where it touches the left hand fixed knife edge. Adjust the right hand movable knife edge by means of the micrometric screw connected to the counter until it touches the right hand corner of the impression. The counter (15) will then show an ocular reading which is transposed to the Vickers pyramid numeral by use of correlation tables accompanying the tester.

h. Where specified hardness limits are desired the third knife edge is used. This is moved by means of special screws to correspond to the smaller dimension or maximum hardness, while the micrometer-controlled knife edge is adjusted to correspond to the minimum hardness or larger dimension. When the settings of the second and third knife edges are made, it is only necessary when taking readings to set the fixed knife edge to the left hand corner of the impression in the usual way. If the right hand corner of the impression appears between the second and third knife edges, the material has the proper hardness for the range desired.

8-18. SHORE SCLEROSCOPE HARDNESS TEST. The Shore scleroscope is not a precision instrument as the others discussed in preceding paragraphs. It is used to give approximate values for comparative hardness readings. Testing hardness with the scleroscope consists of dropping a diamond tipped hammer upon the test specimen from a definite height and measuring the rebound produced. In one type of tester, the height of the rebound must be measured directly on the scale of the machine, while on another the amount is indicated on a dial.

8-19. The Scleroscope Tester. The tester (Figure 8-6) consists of the following major parts:

a. A base, provided with leveling screws, end a clamping arrangement to hold the sample to be tested.

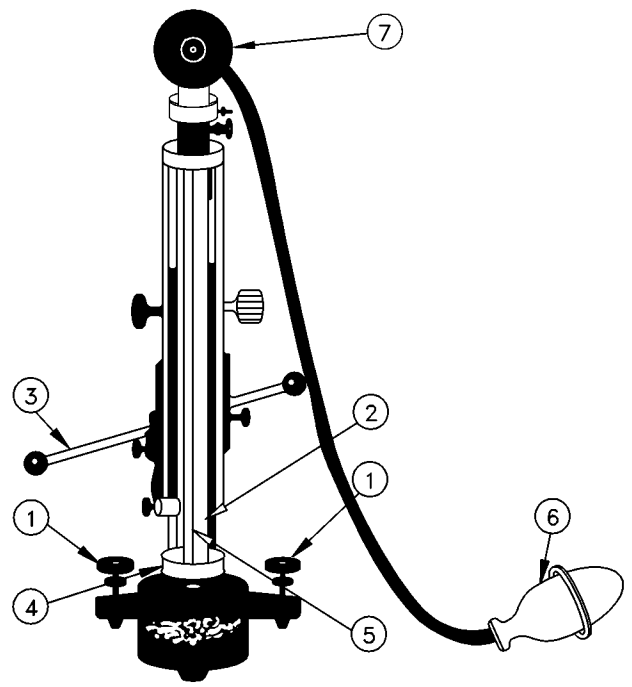

1. Tripod screws
2. Plumb rod
3. Clamping lever
4. Clamping shoe
5. Diamond–tipped hammer
6. Release bulb
7. Head

L9805666

Figure 8-6. Shore Scleroscope

b. A vertical glass tube, mounted to the base and containing the cylindrical diamond point hammer.

c. A suction heat and bulb for lifting and releasing the hammer.

d. A scale, visible through the glass tube, for determining the height of the rebound.

e. A magnifier hammer with a larger contact area is supplied for use with extremely soft metals.

8-20. TESTING WITH THE SCLEROSCOPE. The test is made as follows:

a. Level the instrument by means of the adjusting screws (1). (See figure 8-6). The level position is determined by means of the plumb rod (2).

b. Prepare the test specimen as described for the Brinell and Rockwell tests in preceding paragraphs and clamp it on the base. This is done by raising the lever (3) inserting the sample and exerting the pressure on the clamping shoe (4).

c. Raise the hammer (5) by squeezing and releasing the bulb (6)

d. Release the hammer by again squeezing the bulb and observing its rebound.

e. Several tests should be made at different points of a specimen, and an average reading taken to reduce visual error.

8-21. TENSILE TESTING. The terms tension test and compression test are usually taken to refer to tests in which a prepared specimen is subjected to a gradually increasing load applied axially until failure occurs . For the purpose of tensile testing implied by this technical order this type of setting would apply to determining the mechanical properties desired in a material. For this test, the following test specimens are listed. (See Figure 8-7.) This does not exclude the use of other test specimens for special materials or forms of material. The tensile strength shall be determined by dividing the maximum load on the specimen during a tension test by the original cross-sectional area of the specimen.

a. Diameter of the reduced section may be smaller at center than at ends. Difference shall not exceed 1% of diameter at ends.

b. When an extensometer is required to determine elastic properties, dimensions C and L may be modified. In all cases the percentage of elongation shall be based on dimension G.

c. The type R1 test specimen is circular in cross section and is used for bars, rods, forgings, plates, shapes, heavy-walled tubing, and castings. Types R_2, R_3, R_4, and R_5 are circular in cross-section and are used for material of dimensions insufficient for type R1.

(1) The ends of the reduced section shall not differ in width by more than 0.004 inch.

(2) The ends of the specimen shall be symmetrical with the center line of the reduced section within 0.10 inch.

(3) When material is over 2 inches thick, machine to 3/4 inch or use type R1 test specimen. For more detailed information, refer to Federal Test Method Standard No. 151.

8-22. DECARBURIZATION MEASUREMENT.

8-23. Decarburization is the loss of carbon at the surface of ferrous materials which have been heated for fabricating, welding, etc., or when heated to modify mechanical properties. Effective decarburization is any measurable loss of carbon content which results in mechanical properties below the minimum acceptable specifications for hardened materials. The most common methods used to measure decarburization are microscopic, hardness and chemical. The microscopic method is sufficiently accurate for most annealed and hot rolled material for small amounts of decarburization in high carbon (over 0.60%), high hardness steels. The hardness method is insensitive in this case, and recourse must be taken to chemical analysis. In this technical order, only the hardness method is covered. When precise measurements are required, publications giving detailed measurements must be consulted.

Table 8-2. Rockwell Scales, Loads and Prefix Letters

SCALE PREFIX LETTERS	INDENTOR/PENETRATOR	MAJOR LOAD KILOGRAMS	DIAL NUMBERS
A	Diamond	60	Black
B*	1/16 in Steel Ball	100	Red
C*	Diamond	150	Black
D	Diamond	100	Black
E	1/8 in Ball	100	Red
F	1/16 in Ball	60	Red
G	1/16 in Ball	150	Red
H	1/8 in Ball	60	Red
K	1/8 in Ball	150	Red
L	1/4 in Ball	60	Red
M	1/4 in Ball	100	Red
P	1/4 in Ball	150	Red
R	1/2 in Ball	60	Red
S	1/2 in Ball	100	Red
V	1/2 in Ball	150	Red

* Most Commonly Used Scales.

8-24. HARDNESS METHOD.

8-25. Taper or Step Grind - The specimen containing the surface on which decarburization is to be measured is prepared so that it can be manipulated on a Rockwell superficial or Vickers hardness tester. If the specimen is not in the hardened condition, it is recommended that it be hardened by quenching from heating equipment under conditions which avoid further change in carbon distribution. For the taper grind procedure, a shallow taper is ground through the case, and hardness measurements are made along the surface. The angle is chosen so that readings spaced equal distances apart will represent the hardness at the desired increments below the surface of the case. The step grind procedure is essentially the same as the taper grind, except that hardness readings are made on steps which are known distances below the surface. These steps should be ground at pre-determined depths below the surfaces, and of sufficient areas to allow several hardness readings on each flat.

8-26. The file method is often suitable for detecting decarburization of hardened materials during shop processing, but not for accurate measurement. Base metals expected to harden above RC60 and found to be file soft are probably decarburized. Decarburization of base metal that will not harden to RC60 can not be detected by this method unless specially prepared files are used. The extent and severity of any decarburization detected by this method should be verified by either of the other methods.

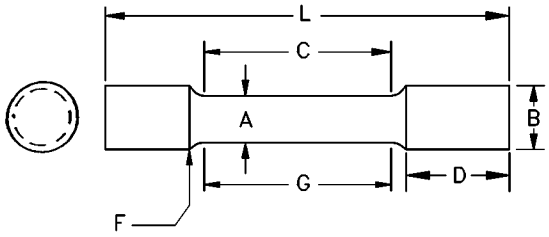

ALL DIMENSIONS IN INCHES

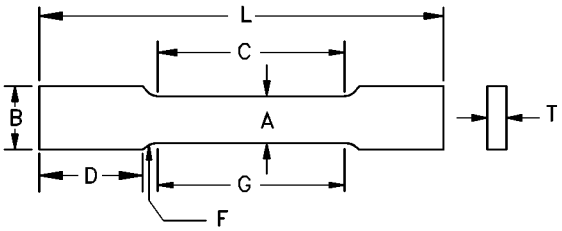

ALL DIMENSIONS IN INCHES

ALL DIMENSIONS IN INCHES

DIMENSIONS	R_1[3]	R_2[3]	R_3[3]	R_4[3]	R_5[3]
A. Diameter at Center[1]	0.505± 0.010	0.357± 0.007	0.252± 0.005	0.160± 0.003	0.113± 0.002
B. Diameter of Ends	3/4	1/2	3/8	5/16	1/4
C. Length of Reduced Section Min.[2]	2 1/4	1 3/4	1 1/4	3/4	5/8
D. Grip Length	1	5/8	5/8	1/2	3/8
F. Fillet Radius	3/8	0.25	0.18	0.15	0.09
G. Gage Length	2.0± 0.005	1.4± 0.005	1.0± 0.005	0.64± 0.005	0.45± 0.005
L. Total Length	5 1/2	3 1/2	3	2	1 5/8
Area of Cross section in^2 approximately	1/5	1/10	1/20	1/50	1/100

ALL DIMENSIONS IN INCHES

DIMENSIONS	FL	F2
A. Width at Center	1 1/2± 1/8−1/4	0.500± 0.010
B. Width at Grips, Approximately	2	3/4
C. Length of reduced section	1.2 9 minimum	2 1/4 minimum
D. Grip Length	3 approximately	2 3/8 minimum
F. Fillet Radius, Minimum	1	1/2
G. Gage Length	8 ± 0.01	2 ± 0.005
L. Total Length, minimum	15	8
T. Thickness	3/16 to 2[3]	5/8 maximum

L9900846

Figure 8-7. Test Specimens

Table 8-3. Approximate Hardness - Tensile Strength Relationship of Carbon and Low Alloy Steels

Rockwell		Vickers	Brinell[3]		Tensile
		Diamond	300 Kg Load - 10mm Ball		Strength
C 150 Kg Load	B 100 Kg Load 1/16 Ball	Pyramid 50 Kg Load	Tungsten Carbide Ball	Steel Ball	1000 lb per sq in.
67		918	820	717	
66		884	796	701	
65		852	774	686	
64		822	753	671	
63		793	732	656	
62		765	711	642	
61		740	693	628	
60		717	675	613	
59		694	657	600	
58		672	639	584	
57		650	621	574	
56	121.3	630	604	561	
55	120.8	611	588	548	
54	120.2	592	571	536	
53	119.6	573	554	524	283
52	119.1	556	538	512	273
51	118.5	539	523	500	264
50	117.9	523	508	488	256
49	117.4	508	494	476	246
48	116.8	493	479	464	237
47	116.2	479	465	453	231
46	115.6	465	452	442	221
45	115.0	452	440	430	215
44	114.4	440	427	419	208
43	113.8	428	415	408	201
42	113.3	417	405	398	194
41	112.7	406	394	387	188
40	112.1	396	385	377	181
39	111.5	386	375	367	176
38	110.9	376	365	357	170
37	110.4	367	356	347	165
36	109.7	357	346	337	160
35	109.1	348	337	327	155
34	108.5	339	329	318	150
33	107.8	330	319	309	147
32	107.1	321	310	301	142
31	106.4	312	302	294	139
30	105.7	304	293	286	136
29	105.0	296	286	279	132
28	104.3	288	278	272	129
27	130.7	281	271	265	126
26	102.9	274	264	259	123
25	102.2	267	258	253	120
24	101.5	261	252	247	118
23	100.8	255	246	241	115
22	100.2	250	241	235	112
21	99.5	245	236	230	110
20	98.9	240	231	225	107

Table 8-3. Approximate Hardness - Tensile Strength Relationship of Carbon and Low Alloy Steels - Continued

Rockwell		Vickers	Brinell[3]		Tensile
		Diamond	300 Kg Load - 10mm Ball		Strength
C 150 Kg Load	B 100 Kg Load 1/16 Ball	Pyramid 50 Kg Load	Tungsten Carbide Ball	Steel Ball	1000 lb per sq in.
19	98.1	235	226	220	104
18	97.5	231	222	215	103
17	96.9	227	218	210	102
16	96.2	223	214	206	100
15	95.5	219	210	201	99
14	94.9	215	206	197	97
13	94.1	211	202	193	95
12	93.4	207	199	190	93
11	92.6	203	195	186	91
10	91.8	199	191	183	90
9	91.2	196	187	180	89
8	90.3	192	184	177	88
7	89.7	189	180	174	87
6	89	186	177	171	85
5	88.3	183	174	168	84
4	87.5	179	171	165	83
3	87	177	169	162	82
2	86	173	165	160	81
1	85.5	171	163	158	80
0	84.5	167	159	154	78
	83.2	162	153	150	76
	82	157	148	145	74
	80.5	153	144	140	72
	79	149	140	136	70
	77.5	143	134	131	68
	76	139	130	127	66
	74	135	126	122	64
	72	129	120	117	62
	70	125	116	113	60
	68	120	111	108	58
	66	116	107	104	56
	64	112	104	100	54
	61	108	100	96	52
	58	104	95	92	50
	55	99	91	87	48
	51	95	86	83	46
	47	91	83	79	44
	44	88	80	76	42
	39	84	76	72	40
	35	80	72	68	38
	30	76	67	64	36
	24	72	64	60	34
	20	69	61	57	32
	11	65	57	53	30
	0	62	54	50	28

8-27. NONDESTRUCTIVE INSPECTION METHODS.

8-28. Radiographic inspection will show internal and external structural details of all types of parts and materials. It is accomplished by passing penetrating radiation (usually X or gamma rays) through the part or assembly being inspected to expose a film. After developing, interpretation of the radiograph will indicate defects or damage. All radiographic inspections shall be accomplished in accordance with T.O. 33B-1-1, MIL-STD-453, and MIL-STD-410.

8-29. Penetrant inspection is a nondestructive inspection method that is used to detect discontinuities open to the surface of nonporous material. It is accomplished by treating the inspection area with a fluid (penetrant) that penetrates the surface discontinuity. Surplus penetrant remaining on the surface is removed and an absorbent material (developer) is applied to the surface. The developer acts as a blotter and draws some of the penetrant from the discontinuity to the surface. Discontinuities are visible due to color contrast between the penetrant drawn out and the background surface. Only fluorescent penetrants are approved for Air Force use. All penetrant inspection materials shall conform to MIL-I-25135. All penetrant inspections shall be accomplished in accordance with T.O. 33B-1-1 and MIL-STD-410.

8-30. Ultrasonic inspection uses a high frequency sound wave to detect discontinuities in materials. The pulser in the ultrasonic instrument sends an electrical impulse to a piezoelectric material in the search unit (transducer). The transducer changes the electrical impulse into mechanical vibrations (sound) and transmits them into the material being inspected. Any marked change in acoustic properties, such as a flaw or interface in the material, reflects the sound back to the transducer. Examination of the reflections on a cathode ray tube will reveal discontinuities in the material. All ultrasonic inspections shall be accomplished in accordance with T.O. 33B-1-1, MIL-I-8950, and MIL-STD-410.

8-31. Magnetic particle inspection is used to detect discontinuities in ferromagnetic materials, principally iron and steel. Magnetic particle inspection is accomplished by inducing a magnetic field into the material being inspected. A discontinuity will interrupt this field, creating north and south poles which will attract magnetic particles applied to the material. Discontinuities are visible due to color contrast between the magnetic particles and the background surface. All magnetic particle inspections shall be accomplished in accordance with T.O. 33B-1-1 and MIL-STD-410.

8-32. Eddy current inspection is used to detect discontinuities in materials that are conductors of electricity. An eddy current is the circulating electrical current induced in a conductor by an alternating magnetic field, which is produced by a small test coil in contact with or close to the material being inspected. Discontinuities in the material being tested cause variations in the induced eddy current. The test coil measures the variations which reveal discontinuities in the material. All eddy current inspections shall be in accordance with T.O. 33B-1-1 and MIL-STD-410.

8-33. CHEMICAL ANALYSIS. Chemical analysis methods are those in which the elements present in metals are determined by the use of reagents in solution, by combustion methods, or by other none-mission methods. Sample metal from any piece shall be such that it represents as nearly as possible the metal of the entire piece. Drilling, milling and other machining operations for sample metal shall be performed without the use of water, oil, or other lubricants, and cutting speeds shall be such that no burning takes place to cause alternation of the chemical composition of the test metal. Method III.I of Federal Method Standard 151A is the controlling document for chemical analysis.

8-34. SPECTROCHEMICAL ANALYSIS. Spectrochemical analysis includes all methods in which measurements of electromagnetic radiations produced by a sample metal are employed to determine the chemical composition. Samples shall be so selected as to be representative of the entire quantity of metal under inspection. Cutting speeds in all machining operations shall be such that no burning takes place to cause alteration of the chemical composition of the test metal. Method 112.1 of Federal Test Method Standard 151A governs this type of analysis. The result of spectrochemical analysis shall be determined to the number of decimal places shown in the chemical requirements for the material.

SECTION IX

HEAT TREATMENT

9-1. GENERAL.

9-2. Controlled atmosphere ovens are not required for heat treatment operations unless specified for a particular part.

9-3. A cold oven is defined as any oven where the temperature is not over 500°F (260°C). Loading and unloading a cold oven is possible without further lowering the temperature.

9-4. Parts that are prone to distortion during heat treatment shall be properly supported and temperature raised gradually by steps. Coat fixturing at part contact points and threaded details with PMC 2264 boron nitride coating prior to installing part and before heat treatment. Cooling of these parts shall also be done gradually. Cycles with A suffix are recommended for this purpose.

9-5. Parts that are not prone to distortion during heat treatment may be loaded into and withdrawn from a hot oven.

9-6. Temperature and time are the most critical factors in heat treatment. Time required at each specified temperature begins only after all sections of parts have reached that temperature. Furnace operator shall make allowance for size of part, number of parts, and furnace input capacities.

9-7. Optimum temperatures are given for each cycle, with tolerances included for practical use. However, it is best to hold to basic temperatures listed.

9-8. Some typical material applications are listed in Table 9-1 for general guidance only. Cycle for which an alloy type is listed may not necessarily be specified for that material.

9-9. SPECIAL HEAT TREATMENT INFORMATION.

9-10. CADMIUM PLATED PARTS. All cadmium plate shall be stripped from parts (SPOP 21) and cadmium plated detail parts shall be removed from assemblies prior to subjecting the part or assemblies to any furnace temperature in excess of 500°F (260°C). At temperatures above 500°F (260°C), stress alloying of molten cadmium will occur with potentially harmful results on the base materials.

9-11. TINT TEST FOR DETERMINING COATING REMOVAL FROM NICKEL BASE AND COBALT BASE ALLOYS.

9-12. Perform test as follows:

a. Remove coating from parts using applicable stripping procedure.

b. Heat parts and an uncoated, vapor blasted test panel of the same material as the parts at 1075° ±25°F (579° ±14°C) for 45 to 75 minutes in air.

c. A uniform color match between the part and the test piece will indicate complete removal of the coating.

Table 9-1. Typical Heat Treatment Application

Cycle No.	Type*	SPOP No.	Possible Alloy Application
1, 1A	STR	455-1, 455-2	Low alloy steel, as AMS 6322 and AMS 6415; martensitic stainless steel, as Type 410 (AMS 5504 and AMS 5613) and Greek Ascoloy (AMS 5508 and AMS 5616)
2	STR	456	Aluminum
3	STR	457	-
4, 4A	STR	458-1, 458-2	Inconel X
5, 5A	STR	459-1, 459-2	Nickel alloys: B-1900 (PWA 663 and PWA 1455); Inconel 713 (PWA 655) Cobalt alloys: Stellite 31 (AMS 5382); WI-52 (PWA 653); MAR-M509 (PWA 647)
6, 6A	STR	460-1, 460-2	Greek Ascoloy (AMS 5508 and AMS 5616) (martensitic stainless steel)

Table 9-1. Typical Heat Treatment Application - Continued

Cycle No.	Type*	SPOP No.	Possible Alloy Application
7	STR	461	Waspaloy, Udimet 700
8	STR	455-3	-
9	STR	459-3	Inconel 600 (nickel alloy); Nimonic 75 (PWA 673) (nickel alloy); stainless steel, as Types 310, 316, 321, and 347
11	STR	464	Titanium
12, 12A	PRE	471, 465	Inconel 718 (nickel alloy), as AMS 5596, AMS 5662, and AMS 5663
13	STR	466	17-7PH (stainless steel - austenite conditioning); Type 430 (ferritic stainless steel), welded with Type 430 filler metal
14	STR	467	Type 430 (ferritic stainless steel), welded with AMS 5680 (Type 347 stainless steel)
15	PRE	468	A-286 (modified Tinidur) stainless steel, as AMS 5525, AMS 5731, AMS 5732, and AMS 5737
17	PRE	470	Incoloy 901 (nickel alloy), as AMS 5660 and AMS 5661
20	SOL	480	HASTELLOY X (nickel alloy)
21	SOL	481	Nickel alloy: HASTELLOY X (AMS 5536 and AMS 5754) Cobalt alloys: STELLITE 31 (AMS5382); Haynes 188 (AMS 5608, AMS 5772, and PWA 1042); L-605 (AMS 5537 and AMS 5759)
22	STR	482	Nickel alloys: Inconel 600 (AMS 5540 and AMS 5665); Inconel 625 (AMS 5599 and AMS 5666); HASTELLOY N; HASTELLOY X (AMS 5536, AMS 5754, and PWA 1038); HASTELLOY W Cobalt alloys: STELLITE 31 (AMS 5382); Haynes 188 (AMS 5608, AMS 5772, and PWA 1042); L-605 (AMS 5537 and AMS 5759); MAR-M509 (PWA 647)
101	SOL	761	Waspaloy (nickel alloy), as AMS 5544, AMS 5706, and AMS 5707
102	SOL	762	Waspaloy (nickel alloy), as AMS 5544, AMS 5706, and AMS 5707
103	STA	763	Waspaloy (nickel alloy), as AMS 5544, AMS 5706, AMS 5707, AMS 5708, and AMS 5709
104	PRE	764	Waspaloy (nickel alloy), as AMS 5596, AMS 5706, AMS 5707, AMS 5708, and AMS 5709
105	SOL	765	Inconel 718 (nickel alloy), as AMS 5596, AMS 5662, and AMS 5663
106	SOL	766	Inconel 718 (nickel alloy, as AMS 5596, AMS 5662, and AMS 5663

Table 9-1. Typical Heat Treatment Application - Continued

Cycle No.	Type*	SPOP No.	Possible Alloy Application
10	PRE	767	Nickel alloys: Inconel 718, as AMS 5596, AMS 5662, and AMS 5663; Inconel X-750, as AMS 5598, AMS 5670, and AMS 5671

* PRE = Precipitation
SOL = Solution
STA = Stabilization
STR = Stress-relief

9-13. TITANIUM ALLOY PARTS.

NOTE

AMS 4901 and 4921 are the only commercially pure titanium material types used widely in the fabrication of P&W engine parts. Virtually all other titanium materials used are titanium alloys and are subject to these instructions.

9-14. GENERAL. All titanium alloy parts shall be cleaned by the following procedure prior to stress-relief. Otherwise, certain impurities that may be present on the parts during the heating cycle could cause stress alloying of the parts. The thin, hard, blue-gray oxide coating sometimes occurring on titanium alloy surfaces and unaffected by this cleaning procedure is harmless in this respect and may be disregarded.

WARNING

Methyl ethyl ketone (MEK) is flammable and harmful to eyes, skin, and breathing passages. Keep ignition sources away, provide adequate ventilation, and wear protective clothing.

NOTE

Since only light films of oil or grease will be removed by the cleaning solution, it is essential that as much surface contamination as possible be removed before immersing parts into the cleaning solution.

a. Remove any visible concentrations of oil, grease, dirt, and any other contaminants by wiping with a clean, lint-free cloth dampened with methyl ethyl ketone TT-M-261 or acetone O-A-51.

WARNING

Alkaline rust remover causes burns. Protect eyes and skin from contact.

NOTE

- Parts shall be immersed only long enough to obtain optimum results.
- Refer to Section V. CLEANING, for solution make-up.

b. Soak in alkaline rust remover (SPS 2, SPS 5, SPS 7, SPS 12, SPS 25, SPS 27, or PS 240) at 180° to 200°F (82° to 93°C) for 1 to 4 minutes maximum.

c. Pressure rinse over tank with cold water, then dip rinse in cold water, following with a cold water pressure rinse.

d. Rinse in hot PMC 1737 deionized water at 150° to 200°F (66° to 93°C). Air dry; do not use compressed air.

e. Immediately after completing step d., protect the parts from all contamination, such as dirt, dust, oil mist, fingerprints, etc. Cover parts with clear plastic sheet or store them in clear plastic bags until furnace or other operation is begun. Use clean white gloves for all handling.

9-15. Type 6A1-4V Titanium Alloy Parts (AMS 4911, 4928, 4930, 4935, 4954, 4956, 4967, and PWA 1213, 1215, 1262). Parts fabricated of these titanium alloys may be stress-relieved in air only to 1015°±15°F (546°±8°C). See Cycles 1 and 1A. At any higher temperatures, an inert atmosphere shall be used regardless of any contrary instructions stipulated in a particular repair.

9-16. SOLUTION, STABILIZATION, OR PRECIPITATION HEAT TREATMENT.

9-17. GENERAL. Solution heat treatment of material (particularly HASTELLOY X) is performed to improve ductility and weldability prior to resizing and repair. Long-time exposure to high temperature engine operating environment causes precipitation of carbides into the grain boundaries. Carbides, particularly chromium carbides, are thus precipitated into the grain boundaries of parts fabricated of HASTELLOY X material and subjected for long periods to temperatures of 1200° to 1700°F (649° to 927°C). The solution treatment dissolves these carbides and puts them back into metallic solution. The cooling cycle, therefore, shall be rapid enough to maintain carbides or precipitation hardeners in solution. Replication and metallurgical examination may be necessary to verify whether fixturing and cooling rate are adequate to obtain desired microstructure and prevent cracking.

9-18. Stabilization heat treatment is maintaining a part at a selected temperature long enough to rearrange the atoms into an improved structure.

9-19. Precipitation heat treatment is a selected temperature and duration that produces beneficial hardening in certain alloys. It is sometimes referred to as Aging, or Age Hardening.

9-20. When a sequence of solution, stabilization, or precipitation heat treatment is applied to a given part, various temperatures are used. The final condition obtained is a combined effect of this sequence.

9-21. The expressions AIR COOL and AIR COOL OR FASTER mean that parts shall be cooled quickly enough to prevent metal structure changes that can happen in certain alloys if cooling is too slow. It does not mean to quench in a liquid. Circulating fans may be used, but fixturing may be required if distortion is a problem.

a. AIR COOL is defined as rate of cooling of part obtained by removing that part from furnace at prescribed temperature and allowing it to cool in room temperature still air. Definition has been broadened to include the following situations.

(1) In vacuum furnace, by force cooling in protective atmosphere.

(2) In protective atmosphere furnace, by shutting off heat and maintaining atmospheric flow rates.

(3) In retort furnace, by removing retort from furnace and fan cooling.

(4) In pit furnace, by removing parts from furnace and cooling in room temperature still air.

b. AIR COOL OR FASTER is defined as cooling not less than 40°F (22°C) per minute to 1100°F (593°C) and not less than 15°F (8°C) from 1100° to 1000°F (538°C).

9-22. Cycle number, type of heat treatment, SPOP number, and maximum temperature are listed in Table 9-2.

Table 9-2. Cross-Index for Solution, Stabilization, or Precipitation Heat Treatments

Cycle No.	Type	SPOP No.	Peak Temp., °F(°C)*	
12	Precipitation	471	1350	(732)
12A	Precipitation	465	1350	(732)
15	Precipitation	468	1325	(718)
17	Precipitation	470	1450	(788)
20	Solution	480	2050	(1121)
21	Solution	481	2150	(1177)
101	Solution	761	1825	(996)
102	Solution	762	1825	(996)
103	Stabilization	763	1550	(843)
104	Precipitation	764	1400	(760)
105	Solution	765	1750	(954)
106	Solution	766	1750	(954)
107	Precipitation	767	1325	(718)

* (disregarding tolerance)

9-23. Solution heat treatment Cycles 20 and 21 are used for various HASTELLOY X parts. Reference to these cycles will be made in the repair instructions, as necessary, by cycle or SPOP number.

NOTE

These cycles apply only to the repair of HASTELLOY X parts that require using one of the following solution heat treatments. The specific cycle required will be included in the repair procedure.

9-24. CYCLE 20 (SPOP 480). Perform as follows:

CAUTION

Do not use this cycle for solution heat treating PWA 1038 HASTELLOY X material. This material was solution treated at 1950°F (1066°C) at its manufacture. The beneficial properties derived from this lower temperature treatment could be lost permanently if subjected to a temperature higher than 1800°F (982°C). For other HASTELLOY alloys, solution heat treat shall be performed per this cycle unless otherwise directed by a specific repair procedure.

a. Heat part to 2050° ±25°F (1121° ±14°C) and hold for 7 to 10 minutes.

NOTE

Hydrogen, argon, or air are acceptable atmospheres; however, when solution treating is to be followed by weld repair that requires complete prior removal of oxides, hydrogen is preferred because of its characteristic and beneficial cleaning action over the entire part. Hydrogen cleaning removes oxides from all surfaces, including those difficult to clean mechanically, and to some extent, from the inside of cracks to be welded.

b. Air cool or faster.

9-25. CYCLE 21 (SPOP 481). Perform as follows:

CAUTION

Do not use this cycle for solution heat treating PWA 1038 HASTELLOY X material. This material was solution treated at 1950°F (1066°C) at its manufacture. The beneficial properties derived from this lower temperature treatment could be lost permanently if subjected to a temperature higher than 1800°F (982°C). For regular Hastelloy material, solution heat treat shall be performed in accordance with Cycle 20 (SPOP 480), unless otherwise directed by a specific repair procedure.

a. Heat part to 2150° ±25°F (1177° ±14°C) and hold for 7 to 10 minutes.

NOTE

Hydrogen, argon, or air are acceptable atmospheres. However, when solution treating is to be followed by weld repair that requires complete prior removal of oxides, hydrogen is preferred because of its characteristic and beneficial cleaning action over the entire part. Hydrogen cleaning removes oxides from all surfaces including those difficult to clean mechanically, and to some extent, from the inside of cracks to be welded.

b. Air cool or faster.

9-26. The following solution, stabilization, or precipitation heat treatment cycles apply primarily to certain age-hardenable alloys such as WASPALOY and INCONEL materials, for stress-relief, and to dissolve precipitated carbides and intermetallics (hardeners).

NOTE

These cycles apply only when specifically invoked in repair procedures in engine publications. Parts that are susceptible to distortion during heat treatment shall be adequately supported, and temperature raised and lowered stepwise. The Suffix A following a cycle number indicates a stepwise cycle. Step cycles shall not be used for solution heat treatments. Refer to cautions in solution heat treat cycles.

9-27. CYCLE 12 (SPOP 471). Perform as follows:

NOTE

This is a short-term precipitation (aging) heat treatment for INCONEL 718 or other part material specified in engine publication.

a. Place part in oven and heat to 1350°±15°F (732°±8°C).

b. Hold at 1350°F (732°C) for 4 hours.

c. Cool to 1200° ±15°F (649° ±8°C) at approximately 100°F (56°C) per hour. Hold at temperature for a total of 3 hours, including cool-down time from 1350°F (732°C).

d. Air cool to room temperature.

9-28. CYCLE 12A (SPOP 465). Perform as follows:

NOTE

This is a short-term precipitation (aging) heat treatment for INCONEL 718 or other part material specified in engine publication.

a. Place part in cold oven.

b. Heat to 600°F (316°C) and hold for 30 minutes.

c. Increase to 800°F (427°C) and hold for 30 minutes.

d. Increase to 1000°F (538°C) and hold for 30 minutes.

e. Increase to 1200°F (649°C) and hold for 30 minutes.

f. Increase to 1350° ±15°F (732° ±8°C) and hold for 4 hours.

g. Cool to 1200° ±15°F (649° ±8°C) at approximately 100°F (56°C) per hour. Hold at temperature for a total of 3 hours, including cool-down time from 1350°F (732°C).

h. Air cool to room temperature.

9-29. CYCLE 15 (SPOP 468). Perform as follows:

NOTE

Heating and cooling rates are optional. Air is an acceptable atmosphere.

a. Heat part to 1325° ±25°F (718° ±14°C) and hold for 4 hours.

b. Air cool.

9-30. CYCLE 17 (SPOP 470). Perform as follows:

NOTE

Hydrogen, argon, or a blend of hydrogen and argon, or vacuum, are acceptable atmospheres.

a. Heat part to 1450° ±15°F (788° ±8°C) and hold for 4 hours.

b. Cool to 500°F (260°C) at a rate equivalent to air cool.

c. Heat part to 1325° ±15°F (718° ±8°C) and hold for 14 hours.

d. Cool at a rate equivalent to air cool.

9-31. CYCLE 101 (SPOP 761). Perform as follows:

CAUTION

Heating or cooling rate between 1000°F (538°C) and 1850°F (1010°C) shall be at least 40°F (22°C) per minute to prevent cracking and to control aging characteristics.

NOTE

This is a solution heat treatment using an argon atmosphere.

a. Place part with thermocouples in retort, and seal retort.

b. Purge retort at approximately 150 CFH argon until dew point reaches -40°F (-40°C) or lower at retort exhaust.

c. Insert retort into furnace.

NOTE

Furnace may initially be set higher than 1850°F (1010°C).

d. Heat to 1825° ±25°F (996° ±14°C) using lower thermocouple for controlling. Do not exceed 1850°F (1010°C) on higher thermocouple. Hold at temperature for 2 hours unless otherwise specified.

e. Remove retort from furnace and cool with forced argon to 1000°F (538°C) in no longer than 18 minutes; then complete cooling with argon or air.

9-32. CYCLE 102 (SPOP 762). Perform as follows:

CAUTION

Heating or cooling rate between 1000°F (538°C) and 1850°F (1010°C) shall be at least 40°F (22°C) per minute to prevent cracking and to control aging characteristics.

NOTE

- This is a solution heat treatment using vacuum. Heat cycle shall be completed in the 0.010 torr range or lower.
- Furnace system shall provide for argon forced cooling, in order to satisfy cooling rate requirement.

a. Place part, with thermocouples, in furnace.

b. Evacuate to 0.009 torr or lower. Static leak rate shall not exceed 50 microns per hour.

NOTE

Furnace may initially be set higher than 1850°F (1010°C).

c. Heat to 1825° ±25°F (996° ±14°C) using lower thermocouple for controlling. Do not exceed 1850°F (1010°C) on higher thermocouple. Hold at temperature for 2 hours unless otherwise specified.

d. Cool at required rate using forced argon.

9-33. CYCLE 103 (SPOP 763). Perform as follows:

NOTE

This is a stabilization heat treatment using air, argon, or vacuum.

a. Place part in cold furnace.

b. Heat to 1550° ±15°F (843° ±8.3°C) for 4 hours.

c. Air cool.

9-34. CYCLE 104 (SPOP 764). Perform as follows:

NOTE

This is a precipitation heat treatment using air, argon, or vacuum.

a. Place part in cold furnace.

b. Heat to 1400° ±15°F (760° ±8.3°C) for 16 hours.

c. Air cool.

9-35. CYCLE 105 (SPOP 765). Perform as follows:

CAUTION

Heating or cooling rate between 1000°F (538°C) and 1775°F (968°C) shall be at least 40°F (22°C) per minute to prevent cracking and to control aging characteristics.

NOTE

This is a solution heat treatment using an argon atmosphere.

a. Place part with thermocouples in retort, and seal retort.

b. Purge retort at approximately 150 CFH argon until dew point reaches -40°F (-40°C) or lower, at retort exhaust.

c. Insert retort into furnace.

NOTE

Furnace may initially be set higher than 1775°F (968°C).

d. Heat to 1750° ±25°F (954° ± 14°C), using lower thermocouple for controlling. Do not exceed 1775°F (968°C) on higher thermocouple. Hold at temperature for 1 hour unless otherwise specified.

e. Remove retort from furnace and cool with forced argon to 1000°F (538°C) in no longer than 16 minutes; then complete cooling with argon or air.

9-36. CYCLE 106 (SPOP 766). Perform as follows:

CAUTION

Heating or cooling rate between 1000°F (538°C) and 1775°F (968°C) shall be at least 40°F (22°C) per minute to prevent cracking and to control aging characteristics.

NOTE

- This is a solution heat treatment using vacuum. Heat cycle shall be completed in the 0.010 torr range or lower.
- Furnace system shall provide for argon forced cooling, in order to satisfy cooling rate requirement.

a. Place part, with thermocouples, in furnace.

b. Evacuate to 0.009 torr or lower. Static leak rate shall not exceed 0.05 torr per hour.

NOTE

Furnace may initially be set higher than 1775°F (968°C).

c. Heat to 1750° ±25°F (954° ±14°C), using lower thermocouple for controlling. Do not exceed 1775°F (968°C) on higher thermocouple. Hold at temperature for 1 hour unless otherwise specified.

d. Cool at required rate using forced argon.

9-37. CYCLE 107 (SPOP 767). Perform as follows:

NOTE

This is a precipitation heat treatment using air or argon.

a. Place part in cold furnace.

b. Heat to 1325° ±15°F (718° ±8.3°C) for 8 hours.

c. Furnace cool at a rate not to exceed 100°F (56°C) per hour to 1150° ±15°F (621° ±8.3°C); hold for 8 hours.

d. Air cool.

9-38. STRESS-RELIEF AFTER WELDING.

NOTE

Local stress-relief of engine parts following minor repairs is authorized only if procedure has been developed to be compatible with applicable parts, material, size, and operating environment, and is approved by the cognizant engineering authority.

9-39. GENERAL. Parts that have been repaired by fusion welding shall ordinarily be stress-relieved.

CAUTION

The required stress-relief (Cycle 1 or 1A) after welding or brazing Type 410 or Greek Ascoloy materials eliminates the brittleness in the joint areas. To avoid cracking, parts shall be handled carefully until stress-relief is accomplished.

NOTE

On certain parts, experience has indicated that stress-relief is not required. This permissible omission will be included in appropriate manual repair section for such parts.

9-40. The following stress-relief cycles are used throughout manual for various parts. Reference to these cycles will be made, as necessary, by cycle or SPOP number.

NOTE

- Parts may require a cycle different from one of the following. This will result in cycle being included in specific repair procedure.
- Parts that are susceptible to distortion during heat treatment shall be adequately supported, and temperature raised and lowered stepwise. The Suffix A following a cycle number indicates a stepwise cycle.

9-41. Cycle number, SPOP number, and maximum temperature are listed in Table 16-3.

Table 9-3. Cross-Index for Stress-Relief Heat Treatments

Cycle No.	SPOP No.	Peak Temp., °F(°C)*	
1	455-1	1015	(546)
1A	455-2	1015	(546)
2	456	350	(177)
3	457	900	(482)
4	458-1	1300	(704)
4A	458-2	1300	(704)
5	459-1	1600	(871)
5A	459-2	1600	(871)
6	460-1	1050	(566)
6A	460-2	1050	(566)
7	461	1500	(816)
8	455-3	1010	(543)
9	459-3	1600	(871)
11	464	1150	(621)
13	466	1400	(760)
14	467	1500	(816)
22	482	1800	(982)

* (disregarding tolerance)

9-42. CYCLE 1 (SPOP 455-1). Heat part to 1015°F ±15°F (546° ±8°C) and hold for 2 hours.

NOTE

To minimize distortion, use Cycle 1A as an alternate. Other cycles are permissible provided stress-relief requirement of 1015° ±15°F (546° ±8°C) for 2 hours is met.

9-43. CYCLE 1A (SPOP 455-2). Perform as follows:

a. Put part in cold oven.

b. Heat to 600°F (316°C) and hold for 30 minutes.

c. Increase to 800°F (427°C) and hold for 30 minutes.

d. Increase to 1015° ±15°F (546° ±8°C) and hold for 2 hours.

e. Cool to 500°F (260°C) not faster than 100°F (56°C) every 15 minutes.

9-44. CYCLE 2 (SPOP 456). Heat part to 350° ±10°F (177° ±6°C) and hold for 1 hour.

9-45. CYCLE 3 (SPOP 457). Perform as follows:

a. Put part in cold oven.

b. Heat to 600°F (316°C) and hold for 30 minutes.

c. Increase to 900° ±15°(482° ±8°C) and hold for 4 hours.

d. Cool to 500°F (260°C) not faster than 100°F (56°C) every 15 minutes.

9-46. CYCLE 4 (SPOP 458-1). Heat part to 1300° ±25°F (704° ±14°C) and hold for 2 hours.

NOTE

To minimize distortion, temperature may be raised and cooled gradually in accordance with Cycle 4A. Other cycles are permissible provided stress-relief requirement of 1300° ±25°F (704° ±14°C) for 2 hours is met.

9-47. CYCLE 4A (SPOP 458-2). Perform as follows:

a. Put part in cold oven.

b. Heat to 600°F (316°C) and hold for 30 minutes.

c. Increase to 800°F (427°C) and hold for 30 minutes.

d. Increase to 1100°F (593°C) and hold for 30 minutes.

e. Increase to 1300°F ±25°F (704° ±15°C) and hold for 2 hours.

f. Cool to 500°F (260°C) not faster than 100°F (56°C) every 15 minutes.

9-48. CYCLE 5 (SPOP 459-1). Heat part to 1600°±25°F (871° ±14°C) and hold for 2 hours.

NOTE

To minimize distortion, temperature may be raised and lowered gradually in accordance with Cycle 5A. Other cycles are permissable provided stress-relief requirement of 1600° ±25°F (871° ±14°C) for 2 hours is met.

9-49. CYCLE 5A (SPOP 459-2). Perform as follows:

a. Put part in cold oven.

b. Heat to 700°F (371°C) and hold for 30 minutes.

c. Increase to 1000°F (538°C) and hold for 30 minutes.

d. Increase to 1300°F (704°C) and hold for 30 minutes.

e. Increase to 1600° ±25°F (871° ±14°C) and hold for 2 hours.

f. Cool to 500°F (260°C) not faster than 100°F (56°C) every 15 minutes.

9-50. CYCLE 6 (SPOP 460-1). Heat part to 1050° ±15°F (566° ±8°C) for 2 hours.

NOTE

To minimize distortion, temperature may be raised and lowered gradually in accordance with Cycle 6A. Other cycles are permissible provided stress-relief requirement of 1050° ±15°F (566° ±8°C) for 2 hours is met.

9-51. CYCLE 6A (SPOP 460-2). Perform as follows:

a. Put part in cold oven.

b. Heat to 600°F (316°C) and hold for 30 minutes.

c. Increase to 800°F (427°C) and hold for 30 minutes.

d. Increase to 1050° ±15°F (566° ±8°C) and hold for 2 hours.

e. Cool to 500°F (260°C) not faster than 100°F (56°C) every 15 minutes.

9-52. CYCLE 7 (SPOP 461). Heat part to 1500°F ±25°F (815°±14°C) and hold for 4 hours.

9-53. CYCLE 8 (SPOP 455-3). Perform as follows:

a. Put part in cold oven.

b. Heat to 600°F (316°C) and hold for 30 minutes.

c. Increase to 800°F (427°C) and hold for 30 minutes.

d. Increase to 1010°F (543°±8°C) and hold for 30 minutes.

e. Cool to 500°F (260°C) not faster than 100°F (56°C) every 15 minutes.

9-54. CYCLE 9 (SPOP 459-3). Heat part to 1600° ±25°F (871° ±14°C) and hold for 1 hour.

9-55. CYCLE 11 (SPOP 464). Perform as follows:

CAUTION

- For titanium parts, a vacuum of 0.5 microns mercury, maximum, or argon or helium with a dew point no higher than -60°F (-51°C) shall be used.
- Longer heat treatment at specified temperature, or shorter heat treatment at higher temperature may be required by engine publication for certain parts.

a. Heat part to 1150° ±15°F (621° ±8°C) and hold for 1 hour.

NOTE

For materials other than titanium, air or argon may be used.

b. Air cool.

9-56. CYCLE 13 (SPOP 466). Perform as follows:

a. Heat part to 1400° ±25°F (760° ±14°C) in air and hold for 2 hours.

b. Air cool, or faster.

9-57. CYCLE 14 (SPOP 467). Perform as follows:

a. Heat part to 1500° ±25°F (816° ±14°C) and hold for 30 minutes.

NOTE

A protective atmosphere is suggested.

b. Furnace cool at a rate of 50°F (28°C) per hour to 1100° (593°C), then air cool or faster.

9-58. CYCLE 22 (SPOP 482). Previously designated Cycle 10.

CAUTION

Parts shall be thoroughly cleaned before entering oven.

NOTE

Hydrogen, argon, vacuum, or air are acceptable atmospheres; however, when heat treatment is to be followed by weld repair, hydrogen is preferable because of its cleaning action on oxides and impurities difficult to clean mechanically, as within cracks or cavities.

a. Place part in cold oven; however, this step may be omitted for thin sheet metal parts.

b. Heat part to 1800° ±25°F (982° ±14°C) and hold for 1 hour.

c. Air cool.

9-59. LOCAL STRESS-RELIEF.

9-60. GENERAL. Local stress-relief is the application of a heat treatment cycle, using a portable heating system, to a part that has been weld repaired, usually without disassembly. Elaborate fixturing is avoided when stress-relieving minor areas of large components.

9-61. Approval for local stress-relief is governed in part by accessibility, temperature requirement, and configuration and material of part.

9-62. Local stress-relief is especially useful when applied to parts on a mounted or partly disassembled engine.

9-63. Besides avoiding disassembly, local stress-relief provides significant cost and time savings.

9-64. Typical local stress-relief methods include the following:

a. Resistance

b. Induction

c. Quartz lamp

CAUTION

Gas burner shall not be used to stress-relieve titanium parts. Exhaust gases can produce harmful surface reaction.

d. Gas burner radiant heater.

9-65. Choice of method depends upon size and shape of joint, part configuration, and accessibility. Resistance blankets and quartz lamps can be used to 1350°F (732°C); induction heaters and radiant gas burners can be used to 1825°F (996°C).

CAUTION

Thermocouples shall not be tack welded to titanium parts.

9-66. Temperature profile shall be monitored with tack welded thermocouples to provide accurate readout for manual or automatic control during heat treat cycle. Thermocouples shall be located every 2 inches of area that is to be stress-relieved. Following the cycle, thermocouples are broken or ground off, and part blended to original contour.

9-67. Stress-relief duration and temperature shall be the same as for a corresponding furnace heat treat, unless otherwise specified in applicable engine technical orders.

9-68. DESCRIPTION OF METHODS. Local stress-relief methods are defined in the following paragraphs.

9-69. Resistance. Heaters consist of nichrome wire elements insulated with ceramic fiber and contained within a flexible wire jacket. These components are woven into a thermal blanket, which shall be held in close contact with surface to be stress-relieved. Supplementary flexible heaters may be added to ensure that adjacent parts do not conduct heat away in such a manner as to make heat distribution non-uniform.

9-70. Induction. Requirements include a high frequency generator, with a water-cooled copper induction coil of sufficient number of turns to be positioned over entire area to be heat treated, such as a welded patch. Coils shall be insulated from metal contact, which will produce electrical arcing. Typical applications include small weld repair of holes or bosses, or replacement of small detail parts.

9-71. Quartz Lamp. Radiant lamp provides intense infrared heat, which can be easily directed toward part being stress-relieved. Temperature can be controlled by pulsing lamp on and off. Typical applications include inlet guide vanes, exhaust struts, intermediate cases, door assemblies, accessory housing, and thrust reversers.

CAUTION

Gas burner shall not be used to stress-relieve titanium parts. Exhaust gases can produce harmful surface reaction.

9-72. Radiant Gas Burner. Good heating patterns and temperature control are permitted by using as burners. Heat treat of several areas can be accomplished simultaneously. Radiant gas burners are fueled with a mixture of air and natural gas.

APPENDIX A

SUPPLEMENTAL DATA

Table A-1. Chemical Symbols

ELEMENT	SYMBOL	ATOMIC NO.	ELEMENT	SYMBOL	ATOMIC NO.
Aluminum	Al	13	Neodymium	Nd	60
Antimony	Sb	51	Neon	Ne	10
Argon	A	18	Nickel	Ni	28
Arsenic	As	33	Nitrogen	N	7
Barium	Ba	56	Osmium	Os	76
Beryllium	Be	4	Oxygen	O	8
Bismuth	Bi	83	Palladium	Pd	46
Boron	B	5	Phosphorus	P	15
Bromine	Br	35	Platinum	Pt	78
Cadmium	Cd	48	Polonium	Po	84
Cesium	Cs	55	Potassium	K	19
Calcium	Ca	20	Praseodymium	Pr	59
Carbon	C	6	Protactinium	Pa	91
Cerium	Ce	58	Radium	Ra	8
Chlorine	Cl	17	Radon(radium emanation)	Rn	86
Chromium	Cr	24	Rhemium	Re	75
Cobalt	Co	27	Rhodium	Rh	45
Columbium (Niobium)	Cb(Nb)	--	Rubedium	Rb	37
Copper	Cu	29	Ruthenium	Ru	44
Dysprosium	Dy	66	Samarium	Sm	62
Erbium	Er	68	Scandium	Sc	21
Europium	Eu	63	Selenium	Se	34
Fluorine	F	9	Silicon	Si	14
Gadolinium	Gd	64	Silver	Ag	47
Gallium	Ga	31	Sodium	Na	11
Germanium	Ge	32	Strontium	Sr	38
Gold	Au	79	Sulphur	S	16
Hafnium	Hf	72	Tantalum	Ta	73
Helium	He	2	Tellurium	Te	52
Holmium	Ho	67	Terbium	Tb	65
Hydrogen	H	1	Thallium	Tl	81
Indium	In	49	Thorium	Th	90
Iodine	I	53	Thulium	Tm	69
Iridium	Ir	77	Tin	Sn	50
Iron	Fe	26	Titanium	Ti	22
Krypton	Kr	36	Tungsten	W	74
Lanthanum	La	57	Uranium	U	92
Lead	Pb	82	Vanadium	V	23
Lithium	Li	3	Xenon	Xe	54
Lutecium	Lu	71	Ytterbium	Yb	70
Magnesium	Mg	12	Yttrium	Yo	39
Manganese	Mn	25	Zinc	Zn	30
Mercury	Hg	80	Zirconium	Zr	40
Molybdenum	Mo	42			

Table A-2. Decimal Equivalents

INCH	Mm.	DRILL SIZE NO. OR LTR	DECIMALS OF AN INCH	INCH	Mm.	DRILL SIZE NO. OR LTR	DECIMALS OF AN INCH
		80	0.0135		1.7		0.066929
		79	0.0145			51	0.067
1/64			0.015625		1.75		0.068897
	0.4		0.15748			50	0.07
		78	0.016		1.8		0.070866
		77	0.018		1.85		0.072834
	0.5		0.019685			49	0.073
		76	0.02		1.9		0.074803
		75	0.021			48	0.076
	0.55		0.021653		1.95		0.076771
		74	0.0225	5/64			0.078125
	0.6		0.023622			47	0.0785
		73	0.024		2.0		0.07874
		72	0.025		2.05		0.080708
	0.65		0.02559			46	0.081
		71	0.026			45	0.082
	0.7		0.027559		2.1		0.082877
		70	0.028		2.15		0.084645
		69	0.02925			44	0.086
	0.75		0.029527		2.2		0.086614
		68	0.031		2.25		0.088582
1/32			0.03125			43	0.089
	0.8		0.031496		2.3		0.090551
		67	0.032		2.35		0.092519
		66	0.033			42	0.0935
	0.85		0.033464	3/32			0.09375
		65	0.035		2.4		0.094488
	0.9		0.035433			41	0.096
		64	0.036		2.45		0.096456
		63	0.037			40	0.098
	0.95		0.037401		2.5		0.098425
		62	0.038			39	0.0995
		61	0.039			38	0.1015
	1.0		0.03937		2.6		0.102362
		60	0.04			37	0.104
		59	0.041		2.7		0.106299
	1.05		0.041338			36	0.1065
		58	0.042		2.75		0.108267
		57	0.043	7/64			0.109375
	1.1		0.043307			35	0.11
	1.15		0.045275		2.8		0.110236
		56	0.0465			34	0.111
3/64			0.046875			33	0.113
	1.2		0.047244		2.9		0.114173
	1.25		0.049212			32	0.116
	1.3		0.051181		3.0		0.11811
		55	0.052			31	0.12
	1.35		0.053149		3.1		0.122047
		54	0.055	1/8			0.125
	1.4		0.055118		3.2		0.125984
	1.45		0.057086		3.25		0.127952
	1.5		0.059055			30	0.1285
		53	0.0595		3.3		0.129921

Table A-2. Decimal Equivalents - Continued

INCH	Mm.	DRILL SIZE NO. OR LTR	DECIMALS OF AN INCH	INCH	Mm.	DRILL SIZE NO. OR LTR	DECIMALS OF AN INCH
	1.55		0.061023		3.4		0.133858
1/16			0.0625			29	0.136
	1.6		0.062992		3.5		0.137795
		52	0.635			28	0.1405
	1.65		0.06496	9/64			0.140625
	3.6		0.141732			A	0.234
		27	0.144	15/64			0.234375
	3.7		0.145669		6.0		0.23622
		26	0.147			B	0.238
	3.75		0.147637		6.1		0.240157
		25	0.1495			C	0.242
	3.8		0.149606		6.2		0.244094
		24	0.152			D	0.246
	3.9		0.153543		6.25		0.246062
		23	0.154		6.3		0.248031
5/32			0.15625	1/4		E	0.25
		22	0.157		6.4		0.251968
	4.0		0.15748		6.5		0.255905
		21	0.159			F	0.257
		20	0.161		6.6		0.259842
	4.1		0.161417			G	0.261
	4.2		0.165354		6.7		0.263779
		19	0.166	17/64			0.265625
	4.25		0.167322		6.75		0.265747
	4.3		0.169291			H	0.266
		18	0.1695		6.8		0.267716
11/64			0.171875		6.9		0.271653
		17	0.173			I	0.272
	4.4		0.173228		7.0		0.27559
		16	0.177			J	0.277
	4.5		0.177165		7.1		0.279527
		15	0.18			K	0.281
	4.6		0.181102	9/32			0.28125
		14	0.182		7.2		0.283464
		13	0.185		7.25		0.285432
	4.7		0.185039		7.3		0.287401
	4.75		0.187007			L	0.29
3/16			0.1875		7.4		0.291338
	4.8		0.188976			M	0.295
		12	0.189		7.5		0.295275
		11	0.191	19/64			0.296875
	4.9		0.192913		7.6		0.299212
		10	0.1935			N	0.302
		9	0.196		7.7		0.303149
	5.0		0.19685		7.75		0.305117
		8	0.199		7.8		0.307086
	5.1		0.200787		7.9		0.311023
		7	0.201	5/16			0.3125
13/64			0.203125		8.0		0.31496
		6	0.204			O	0.316
	5.2		0.204724		8.1		0.318897
		5	0.2055		8.2		0.322834
	5.25		0.206692			P	0.323

Table A-2. Decimal Equivalents - Continued

INCH	Mm.	DRILL SIZE NO. OR LTR	DECIMALS OF AN INCH	INCH	Mm.	DRILL SIZE NO. OR LTR	DECIMALS OF AN INCH
	5.3		0.208661		8.25		0.324802
		4	0.209		8.3		0.326771
	5.4		0.212598	21/64			0.328125
		3	0.213		8.4		0.330708
	5.5		0.216535			Q	0.332
7/32			0.21875		8.5		0.334645
	5.6		0.220472		8.6		0.338582
		2	0.221			R	0.339
	5.7		0.224409		8.7		0.342519
	5.75		0.226377	11/32			0.34375
		1	0.228		8.75		0.344487
	5.8		0.228346		8.8		0.346456
	5.9		0.232283			S	0.348
	8.9		0.350393	23/32			0.71875
	9.0		0.35433		18.5		0.728345
		T	0.358	47/64			0.734375
	9.1		0.358267		19.0		0.74803
23/64			0.359375	3/4			0.75
	9.2		0.362204	49/64			0.765625
	9.25		0.364172		19.5		0.767715
	9.3		0.366141	25/32			0.78125
		U	0.368		20.0		0.7874
	9.4		0.370078	51/64			0.796875
	9.5		0.374015		20.5		0.807085
3/8			0.375	13/16			0.8125
		V	0.377		21.0		0.82677
	9.6		0.377952	53/64			0.828125
	9.7		0.381889	27/32			0.84375
	9.75		0.383857		21.5		0.846455
	9.8		0.385826	55/64			0.859375
		W	0.386		22.0		0.86614
	9.9		0.389763	7/8			0.875
25/64			0.390625		22.5		0.885825
	10.0		0.3937	57/64			0.890625
		X	0.397		23.0		0.90551
		Y	0.404	29/32			0.90625
13/32			0.40625	59/64			0.921875
		Z	0.413		23.5		0.925195
	10.5		0.413385	15/16			0.9375
27/64			0.421875		24.0		0.94488
	11.0		0.43307	61/64			0.953125
7/16			0.4375		24.5		0.964565
	11.5		0.452755	31/32			0.96875
29/64			0.453125		25.0		0.98425
15/32			0.46875	63/64			0.984375
	12.0		0.47244	1			1.0
31/64			0.484375				
	12.5		0.492125				
1/2			0.5				
	13.0		0.51181				
33/64			0.515625				
17/32			0.53125				
	13.5		0.531495				

Table A-2. Decimal Equivalents - Continued

INCH	Mm.	DRILL SIZE NO. OR LTR	DECIMALS OF AN INCH	INCH	Mm.	DRILL SIZE NO. OR LTR	DECIMALS OF AN INCH
35/64			0.546875				
	14.0		0.55118				
9/16			0.5625				
	14.5		0.570865				
37/64			0.578125				
	15.0		0.59055				
19/32			0.59375				
39/64			0.609375				
	15.5		0.610235				
5/8			0.625				
	16.0		0.62992				
41/64			0.640625				
	16.5		0.649605				
21/32			0.65625				
	17.0		0.66929				
43/64			0.671875				
11/16			0.6875				
	17.5		0.688975				
45/64			0.703125				
	18.0		0.70866				

Table A-3. Engineering Conversion Factors

LENGTH

1 inch = 2.54 Centimeters = 0.0833 Foot = 0.0278 Yard
1 foot = 0.305 Meter = 0.333 Yard
1 yard = 0.914 Meter = 3 Feet
1 Rod = 16 1/2 Feet = 5 1/2 Yards
1 Mile = 1.609 Kilometers = 5280 Feet = 1760 Yards
1 Centimeter = 0.3937 Inch = 0.0328 Foot
1 Meter = 39.37 Inches = 3.281 Feet = 1.094 Yards
1 Kilometer = 1000 Meters = 3280.83 Feet = 1093.61 Yards = 0.62137 Mile

AREA

1 Sq. Inch = 6.452 Sq. Centimeters
1 Sq. Foot = 144 Sq. Inches = 929.032 Sq. Centimeters
1 Sq. Yard = 1296 Sq. Inches = 9 Sq. Feet = 0.836 Sq. Meter
1 Sq. Rod = 272 1/4 Sq Feet = 30 1/4 Sq. Yards
1 Acre = 43,560 Sq. Feet = 160 Sq. Rods
1 Sq. Mile = 640 Acres
1 Sq. Centimeter = 0.155 Sq. Inch
1 Sq. Meter = 1550 Sq. Inches = 10.764 Sq. Feet = 1.196 Sq. Yards
1 Sq. Kilometer = 0.3861 Sq. Miles = 247.104 Acres

VOLUME

1 Cu. Inch = 16.39 Cu. Centimeters = 0.00433 Gallons*
1 Cu. Foot = 1728 Cu. Inches = 7.48 Gallons* = 28.317 Liters = 0.037 Cu. Yards
1 Cu. Yard = 27 Cu. Feet = 0.7646 Cu. Meter = 202 Gallons*
1 Cu. Centimeter = 0.001 Liter = 0.061 Cu. Inch
1 Cu. Meter = 35.31 Cu. Feet = 1.308 Cu. Yards = 264.2 Gallons*
1 Quart* = 0.25 Gallons* = 57.75 Cu. Inches = 0.946 Liter = 2 Pints*
1 Gallon* = 0.832702 Imperial Gallon = 231 Cu. Inches = 0.1377 Cu. Feet = 3.785 Liters = 3785 Cu. Centimeters
1 Gallon, Imperial = 1.20091 U.S. Gallons
1 Barrel (Std.) = 31 1/2 Gallons
1 Barrel (Oil) = 42 Gallons
*U.S. Measure

WEIGHT

1 Ounce = 16 Drams = 437.5 Grains = 0.0625 Pound = 28.35 Grams = 0.9155 Ounce (Troy)
1 Pound = 16 0unces = 453.593 Grams = 0.453593 Kilogram
1 Ton (Short) = 2000 Pounds = 907.185 Kilograms = 0.892857 Long Ton = 0.907185 Metric Ton
1 Ton (Metric) = 2204.62 Pounds = 0.98421 Long Ton = 1.10231 Short Tons
1 Ton (Long) = 2240 Pounds = 1016.05 Kilograms = 1.120 Short Tons = 1.01605 Metric Tons
1 Gram = 15.43235 Grains = 0.001 Kilogram
1 Kilogram = 2.20462 Pounds

COMPOUND UNITS

1 gram per square millimeter	= 1.422 pounds per square inch
1 kilogram per square millimeter	= 1.422.32 pounds per square inch
1 kilogram per square centimeter	= 14.2232 pounds per square inch
1 kilogram per square meter	= 0.2048 pound per square foot
	= 1.8433 pounds per square yard

Table A-3. Engineering Conversion Factors - Continued

COMPOUND UNITS (Cont)

1 kilogram meter	= 7.2330 foot pounds
1 kilogram per meter	= 0.6720 pound per foot
1 pound per square inch	= 0.07031 kilogram per square centimeter
1 pound per square foot	= 0.0004882 kilogram per square centimeter
1 pound per square foot	= 0.006944 pound per square inch
1 pound per cubic inch	= 27679.7 kilograms per cubic meter
1 pound per cubic foot	= 16.0184 kilograms per cubic meter
1 kilogram per cubic meter	= 0.06243 pound per cubic foot
1 foot per second	= 0.30480 meter per second
1 meter per second	= 3.28083 feet per second
1 meter per second	= 2.23693 miles per hour

MULTIPLES

Circumference of Circle	= Diameter X 3.1416
Area of Circle	= Square of Diameter X 0.7854, or Square of Radius X 3.1416, or Square of Circumference X 0.07958
Area of Triangle	= Base X one-half altitude
Surface of Sphere	= Circumference X diameter, or Square of diameter X 3.1416
Volume of Sphere	= Surface X one-sixth diameter, or Cube of diameter X 0.5236
Area of Hexagon	= Square of Diameter of Inscribed Circle X 0.866
Area of Octagon	= Square of Diameter of Inscribed Circle X 0.828

ENGINEERING UNITS

1 Horsepower =	1 kilowatt Hour =
33,000 foot pounds per minute	1,000 watt hours
550 foot pounds per second	1.34 horsepower hours
746 watts	2,655,220 foot pounds
0.746 kilowatts	3,412 heat units (B.T.U)
1 Horsepower Hour =	1 British Thermal Unit =
0.746 Kilowatt hours	1,055 watt seconds
1,980,000 foot pounds	778 foot pounds
2,545 heat units (B.T.U)	0.000293 kilowatt hour
	0.000393 horsepower hour
1 Kilowatt =	1 Watt =
1,000 watts	1 joule per second
1.34 horsepower	0.00134 horsepower
737.3 foot pounds per second	3.3412 heat units (B.T.U.) per hour
44.240 foot pounds per minute	0.7373 foot pounds per second
56.9 heat units (B.T.U) per minute	44.24 foot pounds per minute

The following weights are approximate and variations must be expected in practice.

Table A-4. Table of Weights - Aluminum and Aluminum Alloy

Bars-Flat

Size	Lbs Per Linear Ft
1/2 x 1	0.578
1/2 x 2	1.174
3/4 x 2	1.7604
3/4 x 3	2.6408
1 x 2	2.3472
1 x 3	3.5208
1 1/2 x 2	3.5208
1 3/4 x 3 1/2	7.1883
2 x 3	7.0416
2 3/4 x 4	12.9096
3 x 4	14.350

Bars-Hexagon

Size	Lbs Per Linear Ft
3/8	0.147
7/16	0.20
1/2	0.262
9/16	0.331
5/8	0.409
3/4	0.639
1	1.047
1 1/4	1.620
1 1/2	2.340

Rods-Round

Size	Lbs Per Linear Ft
3/16	0.032
1/4	0.058
5/16	0.090
3/8	0.129
7/16	0.176
1/2	0.230
9/16	0.291
5/8	0.360
11/14	0.435
3/4	0.518
13/16	0.608
7/8	0.705
15/16	0.809
1	0.921
1 1/4	1.439
1 3/8	1.741
1 1/2	2.072
1 3/4	2.820
2	3.683
2 1/2	5.755
2 3/4	6.964
3	8.287
3 1/2	11.550
4	15.200

Sheets

Thickness	Lbs Per Sq Ft
.0126	0.1797
.016	0.2253
.020	0.2817
.0253	0.3570
.032	0.4501
.0359	0.5055
.0403	0.5676
.0508	0.7158
.0641	0.9026
.0808	1.1382
.0907	1.2781
.128	1.8099
.156	2.202
.1875	2.6481
.250	3.5215
.375	5.2822
.500	7.212

Tubing-Round

Size	Lbs Per Linear Ft
1/4 x .028	0.025
1/4 x .032	0.027
1/4 x .035	0.03
1/4 x .049	0.036
1/4 x .058	0.044
1/4 x .065	0.047
5/16 x .025	0.027
5/16 x .028	0.032
5/16 x .035	0.039
5/16 x .065	0.061
3/8 x .025	0.033
3/8 x .028	0.037
3/8 x .035	0.0435
3/8 x .042	0.053
3/8 x .049	0.063
7/16 x .035	0.054
7/16 x .049	0.075
1/2 x .032	0.056
1/2 x .035	0.063
1/2 x .042	0.073
1/2 x .049	0.086
1/2 x .065	0.11
9/16 x .032	0.067
5/8 x .035	0.08
5/8 x .042	0.093
5/8 x .049	0.11
5/8 x .058	0.13
5/8 x .065	0.14
11/16 x .049	0.105
3/4 x .035	0.096
3/4 x .049	0.1245
3/4 x .058	0.15
3/4 x .065	0.17
3/4 x .083	0.21
13/16 x .032	0.095
13/16 x .049	0.13
7/8 x .028	0.09
7/8 x .035	0.11
7/8 x .049	0.16
15/16 x .032	0.11
15/16 x .049	0.17
15/16 x .083	0.27
1 x .032	0.12
1 x .035	0.13
1 x .042	0.16
1 x .049	0.18
1 x .058	0.210
1 x .065	0.23
1 x .083	0.29
1 1/16 x .032	0.13
1 1/16 x .083	0.31
1 1/8 x .035	0.15
1 1/8 x .049	0.20
1 1/8 x .058	0.24
1 1/8 x .065	0.27
1 3/16 x .083	0.35
1 1/4 x .035	0.16
1 1/4 x .049	0.2134
1 1/4 x .058	0.27
1 1/4 x .065	0.30
1 1/4 x .083	0.37
1 5/16 x .083	0.39
1 3/8 x .032	0.17
1 3/8 x .049	0.25
1 3/8 x .058	0.29
1 3/8 x .065	0.33
1 3/8 x .083	0.41
1 3/8 x .120	0.58
1 7/16 x .095	0.48
1 1/2 x .035	0.19
1 1/2 x .049	0.27
1 1/2 x .058	0.32
1 1/2 x .065	0.36
1 1/2 x .083	0.45
1 5/8 x .065	0.39
1 5/8 x .125	0.72
1 11/14 x .095	0.58
1 3/4 x .035	0.23
1 3/4 x .049	0.32
1 3/4 x .065	0.3934
1 3/4 x .083	0.53
1 3/4 x .125	0.79
2 x .042	0.29
1 7/8 x .049	0.34
2 x .049	0.36
2 x .065	0.48
2 x .083	0.61
2 x .125	0.92
2 1/4 x .025	0.2052
2 1/2 x .065	0.61

Tubing-Streamline

Size	Lbs Per Linear Ft
1.500 x .250 x .020	0.082
1.500 x .375 x .020	0.085
1.625 x .375 x .025	0.115
1.875 x .375 x .035	0.16
2.00 x .875 x .049	0.27
2.01563 x .375 x .025	0.12
2.625 x .375 x .035	0.22
3.00 x .375 x .035	0.25
3.125 x .375 x .032	0.25
3.350 x 1.50 x .065	0.61
4.0625 x 1.71 x .065	0.73

Table A-5. Table of Weights - Brass

Bars-Flat

Size	Lbs Per Linear Ft
1/8 x 1/2	0.238
1/8 x 3/4	0.358
1/8 x 1	0.475
1/8 x 1 3/4	0.815
1/8 x 2	0.935
6/32 x 1	0.625
3/16 x 3/4	0.535
3/16 x 1	0.715
3/16 x 1 1/4	0.895
3/16 x 1 1/2	1.00
3/16 x 1 3/4	1.175
3/16 x 2	1.385
3/16 x 2 1/2	1.785
3/16 x 3	2.055
1/4 x 1	0.9575
1/4 x 1 1/8	1.075
1/4 x 1 1/4	1.185
1/4 x 1 3/4	1.585
1/4 x 2	1.885
1/4 x 2 1/2	2.375
1/4 x 3	2.815
1/4 x 6	5.65
5/16 x 3/4	0.957
5/16 x 1	1.075
5/16 x 1 1/4	1.475
5/16 x 1 1/2	1.975
5/16 x 1 3/4	2.075
5/16 x 2	2.375
5/16 x 2 1/2	3.075
5/16 x 3	3.875
5/16 x 4	5.125
5/16 x 6	8.75
3/8 x 1	1.285
3/8 x 1 1/4	1.575
3/8 x 1 1/2	2.00
3/8 x 1 3/4	2.275
3/8 x 2	2.675
3/8 x 2 1/2	3.475
3/8 x 3	4.175
3/8 x 4	5.725
3/8 x 6	8.325
1/2 x 1	1.795
1/2 x 1 1/2	2.685
1/2 x 2	3.675
1/2 x 2 1/2	4.675
1/2 x 3	5.675
1/2 x 4	7.705
1/2 x 6	11.10
5/8 x 1	2.156
5/8 x 2	4.250
3/4 x 1	2.875
3/4 x 2	5.750
7/8 x 2 1/2	8.325
1 x 1 1/4	4.525
1 x 2	7.705

Bars-Hexagon

Size	Lbs Per Linear Ft
3/16	0.1123
1/4	0.1997
5/16	0.3120
3/8	0.4493
7/16	0.6115
1/2	0.7987
9/16	1.001
5/8	1.248
11/16	1.510
3/4	1.797
12/16	2.109
7/8	2.446
15/16	2.808
1	3.195
1 1/8	4.043
1 3/16	4.505
1 1/4	4.992
1 5/16	5.503
1 3/8	6.040
1 1/2	7.188
1 9/16	7.800
1 5/8	8.436
1 11/14	9.097
1 3/4	9.784
1 13/16	10.50
1 7/8	11.23
1 15/16	11.99
2	12.78
2 1/2	19.97
3	26.41

Bars-Square

Size	Lbs Per Linear Ft
3/16	0.1297
1/4	0.2306
9/16	0.3602
3/8	0.5188
7/16	0.7061
1/2	0.9222
5/8	1.441
3/4	2.075
1	3.689
1 1/4	5.764
1 1/2	8.300
2	14.76

Rods-Round

Size	Lbs Per Linear Ft
1/16	0.01132
3/32	0.03625
1/8	0.04527
6/32	0.0915
3/16	0.1019
7/32	0.1475
1/4	0.1811
9/32	0.2375
9/14	0.2829
11/32	0.3480
3/8	0.4074
28/64	0.4185
12/32	0.4866
7/16	0.5546
1/2	0.7243
9/16	0.9167
5/8	1.132
11/14	1.369
3/4	1.630
13/16	1.913
7/8	2.218
18/14	2.546
1	2.897
1 1/8	3.667
1 3/14	4.086
1 1/4	4.527
1 5/16	4.991
1 3/8	5.478
1 7/16	5.987
1 1/2	6.519
1 9/16	7.073
1 5/8	7.651
1 11/16	8.250
1 3/4	8.873
1 13/14	9.518
1 7/8	10.19
1 15/16	10.88
2	11.59
2 1/4	14.67
2 1/2	18.11
2 3/4	21.91
2 7/8	23.95
3	26.08
3 1/2	36.75
4	46.93
5	74.25
6	108.25

Sheet

Thickness	Lbs Per Sq Ft
.0031	0.1393
.0035	0.1564
.004	0.1756
.0045	0.1972
.005	0.2214
.0056	0.2486
.0063	0.2792
.0071	0.3135
.008	0.3521
.0089	0.3953
.010	0.4439
.0113	0.4985
.0126	0.5598
.0142	0.6286
.0159	0.7059
.0179	0.7927
.0201	0.8901
.0226	0.9995
.0253	1.122
.0285	1.260
.032	1.415
.0359	1.589
.0403	1.785
.0453	2.004
.0508	2.251
.0571	2.527
.0641	2.838
.072	3.187
.0808	3.578
.0907	4.018
.1019	4.512
.1144	5.067

Table A-5. Table of Weights - Brass - Continued

.1285	5.690
.1443	6.389
.162	7.175
.1819	8.057
.2043	9.047
.2294	10.16
.2576	11.41
.2893	12.81
.3249	14.39
.3648	16.15
.4096	18.14
.460	20.37

Shim Stock

Thickness	No. Of Ozs Per Sq Ft
.002	1.40
.004	2.75
.006	4.50
.008	6.00
.010	6.75
.012	9.00

Tubing-Round

Size	Lbs Per Linear Ft
1/8 x .020	0.024
1/8 x .032	0.034
3/16 x .028	0.052
1/4 x .032	0.081
1/4 x .049	0.114
5/16 x .032	0.104
3/8 x .028	0.112
3/8 x .032	0.127
3/8 x .042	0.162
3/8 x .065	0.233
7/14 x .028	0.133
1/2 x .032	0.173
1/2 x .035	0.188
1/2 x .065	0.327
5/8 x .032	0.220
5/8 x .049	0.327
5/8 x .065	0.421
3/4 x .025	0.210
3/4 x .032	0.266
3/4 x .049	0.397
7/8 x .032	0.312
7/8 x .049	0.468
7/8 x .065	0.609
1 x .032	0.358
1 x .035	0.391
1 x .049	0.567
1 x .065	0.703
1 1/8 x .032	0.404
1 1/8 x .049	0.610
1 1/8 x .058	0.716
1 1/8 x .065	0.797
1 1/8 x .095	1.132
1 1/8 x .134	1.1537
1 1/4 x .020	0.285
1 1/4 x .032	0.451
1 1/4 x .049	0.681
1 1/4 x .058	0.800
1 1/4 x .065	0.891
1 1/4 x .072	0.981
1 3/8 x .035	0.543
1 3/8 x .049	0.752
1 3/8 x .065	0.935
1 1/2 x .032	0.544
1 1/2 x .049	0.823
1 1/2 x .065	1.08
1 5/8 x .032	0.590
1 5/8 x .049	0.893
1 5/8 x .065	1.173
1 3/4 x .032	0.636
1 3/4 x .049	0.964
1 3/4 x .065	1.267
1 7/8 x .049	1.035
2 x .032	0.729
2 x .035	0.796
2 x .065	1.455
2 1/4 x .049	1.248
2 1/4 x .065	1.643
2 3/8 x .035	0.9275
2 1/2 x .035	0.998
2 1/2 x .065	1.831
2 7/8 x .1875	5.875
3 x .032	1.200

Wire

Size	Lbs Per Linear Ft
.0010	0.000002884
.0031	0.00002852
.0035	0.00003596
.004	0.00004535
.0045	0.00005718
.005	0.00007210
.0056	0.00009092
.0063	0.0001146
.0071	0.0001446
.008	0.0001823
.0089	0.0002299
.010	0.0002898
.0113	0.0003655
.0126	0.0004609
.0142	0.0005812
.0159	0.0007328
.0179	0.0009241
.0201	0.001165
.0226	0.001469
.0254	0.001853
.0285	0.002336
.032	0.002946
.0359	0.003715
.0403	0.004684
.0453	0.005907
.0508	0.007449
.0571	0.009393
.0641	0.01184
.072	0.01493
.0800	0.01883
.0907	0.02375
.1019	0.02994
.1144	0.03776
.1285	0.04761
.1443	0.06004
.162	0.07571
.1819	0.09547
.2043	0.1204
.2294	0.1518
.2576	0.1914
.2893	0.2414
.3249	0.3044
.3648	0.3838
.4096	0.4839
.460	0.6102

Table A-6. Table of Weights - Bronze

Bars-Hexagon

Size	Lbs Per Linear Ft
5/16	0.3081
3/8	0.4437
7/16	0.6039
1/2	0.7888
9/16	0.9983
5/8	1.232
3/4	1.775
1	3.155

Rods-Round

Size	Lbs Per Linear Ft
1/8	0.04471
3/16	0.1006
1/4	0.1788
9/16	0.2794
3/8	0.4024
1/2	0.7154
9/16	0.9054
5/8	1.118
11/16	1.353
3/4	1.610
13/14	1.889
7/8	2.191
1	2.862
1 1/8	3.622
1 3/16	4.035
1 1/4	4.471
1 3/8	5.410
1 7/14	5.913
1 1/2	6.438
1 3/4	8.763
2	11.45
2 1/8	12.92
2 1/2	17.88
3	25.75
3 1/2	35.05
4	45.78

Sheet

Thickness	Lbs Per Sq Ft
.010	0.4406
.012	0.5552
.0159	0.7006
.0201	0.8857
.0253	1.115

Table A-6. Table of Weights - Bronze - Continued

.032	1.410	.050	2.238	.0907	3.997
.0359	1.582	.0641	2.825	.1285	5.662
.0403	1.776	.0808	3.567		

Table A-7. Table Of Weights - Copper

Bars-Flat

Size	Lbs Per Linear Ft
1/16 x 3/4	0.1809
1/8 x 1	0.4823
1/8 x 2	0.9646
1/4 x 1	0.9646
1/4 x 2	1.929
1/4 x 3	3.894
1/4 x 4	3.858
3/8 x 1	1.447
3/8 x 2	2.894
1/2 x 3/4	1.425
1/2 x 1	1.929
5/8 x 1 1/2	3.675

Rods-Round

Size	Lbs Per Linear Ft
1/4	0.1894
9/16	0.2959
3/8	0.4261
7/16	0.580
1/2	0.7576
5/8	1.184
3/4	1.705
7/8	2.320
1	3.030
1 1/8	3.835
1 1/4	4.735
1 1/2	6.818
1 3/4	9.281
2	12.12
2 1/2	18.94
3	27.27

Sheet

Thickness	Lbs Per Sq Ft
.002	0.125
.003	0.1434
.005	0.2312
.006	0.2914
.010	0.4625
.0126	0.5827
.0142	0.6567
.0159	0.7353
.0201	0.9296
.0226	1.0452
.0253	1.170
.032	1.4799
.0359	1.6602
.0403	1.8637
.0453	2.0950
.0508	2.3493
.0571	2.6407
.0641	2.9644
.0808	3.7367
.0907	4.1946
.1285	5.9427

Tubing-Round

Size	Lbs Per Linear Ft
1/8 x .020	0.026
1/8 x .025	0.030
1/8 x .028	0.033
1/8 x .032	0.036
1/8 x .049	0.045
3/16 x .022	0.044
3/16 x .028	0.055
3/16 x .032	0.061
3/16 x .035	0.065
3/16 x .042	0.075
3/16 x .049	0.083
7/22 x .065	0.132
1/4 x .028	0.076
1/4 x .032	0.085
1/4 x .035	0.092
1/4 x .042	0.106
1/4 x .049	0.120
1/4 x .065	0.146
9/22 x .042	0.122
3/16 x .025	0.088
5/16 x .028	0.097
5/16 x .032	0.110
5/16 x .035	0.119
5/16 x .042	0.139
5/16 x .049	0.158
5/16 x .058	0.180
5/16 x .065	0.196
3/8 x .025	0.106
3/8 x .028	0.118
3/8 x .032	0.134
3/8 x .035	0.145
3/8 x .042	0.170
3/8 x .049	0.194
3/8 x .065	0.245
3/8 x .083	0.295
3/8 x .095	0.325
7/16 x .032	0.158
7/16 x .035	0.171
7/16 x .042	0.202
7/16 x .049	0.232
7/16 x .065	0.295
1/2 x .028	0.161
1/2 x .032	0.182
1/2 x .035	0.198
1/2 x .042	0.234
1/2 x .049	0.269
1/2 x .058	0.312
1/2 x .065	0.344
1/2 x .120	0.554
1/2 x .134	0.596
9/16 x .032	0.207
9/16 x .035	0.225
9/16 x .042	0.266
9/16 x .049	0.306
9/16 x .120	0.645
9/16 x .134	0.704
5/8 x .032	0.231
5/8 x .035	0.251
5/8 x .042	0.298
5/8 x .049	0.343
5/8 x .065	0.443
5/8 x .083	0.547
5/8 x .120	0.737
11/14 x .120	0.812
3/4 x .025	0.220
3/4 x .028	0.246
3/4 x .032	0.280
3/4 x .035	0.304
3/4 x .042	0.362
3/4 x .049	0.418
3/4 x .058	0.488
3/4 x .065	0.542
3/4 x .083	0.673
3/4 x .120	0.920
3/4 x .134	1.00
13/16 x .042	0.396
13/16 x .049	0.452
7/8 x .028	0.289
7/8 x .032	0.328
7/8 x .035	0.358
7/8 x .049	0.492
7/8 x .058	0.576
7/8 x .095	0.901
7/8 x .109	1.02
7/8 x .120	1.10
1 x .025	0.297
1 x .028	0.331
1 x .032	0.377
1 x .035	0.411
1 x .042	0.489
1 x .049	0.567
1 x .065	0.739
1 x .120	1.29
1 1/16 x .032	0.403
1 1/16 x .035	0.438
1 1/8 x .032	0.425
1 1/8 x .042	0.553
1 1/8 x .049	0.641
1 1/8 x .065	0.838
1 1/8 x .148	1.759
1 3/16 x .032	0.453
1 1/4 x .032	0.474
1 1/4 x .035	0.517
1 1/4 x .049	0.716
1 1/4 x .065	0.937
1 1/4 x .072	1.03
1 1/4 x .148	1.98
1 5/16 x .032	0.498
1 5/16 x .042	0.648
1 5/16 x .049	0.758
1 3/8 x .028	0.459

Table A-7. Table Of Weights - Copper - Continued

1 3/8 x .032	0.523
1 3/8 x .035	0.570
1 3/8 x .042	0.681
1 3/8 x .049	0.790
1 3/8 x .065	1.036
1 3/8 x .148	2.209
1 7/16 x .035	0.597
1 1/2 x .032	0.571
1 1/2 x .042	0.745
1 1/2 x .049	0.865
1 1/2 x .058	1.017
1 1/2 x .065	1.135
1 1/2 x .148	2.434
1 5/8 x .032	0.620
1 5/8 x .042	0.809
1 5/8 x .049	0.939
1 5/8 x .058	1.106
1 5/8 x .065	1.238
1 5/8 x .148	2.659
1 3/4 x .032	0.669
1 3/4 x .042	0.873
1 3/4 x .049	1.014
1 3/4 x .065	1.332
1 3/4 x .148	2.884
1 7/8 x .032	0.717
1 7/8 x .042	0.937
1 7/8 x .049	1.088
1 7/8 x .065	1.431
1 7/8 x .148	3.109
2 x .032	0.766
2 x .035	0.837
2 x .042	1.00
2 x .049	1.163
2 x .065	1.530
2 x .083	1.936
2 x .095	2.202
2 1/4 x .049	1.31
2 1/4 x .065	1.73
2 1/2 x .065	1.93
2 3/4 x .095	3.07
3 x .120	4.20

Wire

Size	No. of Ft Per Lb
.020	826.9
.0253	516.7
.032	323.0
.0359	256.6
.0403	203.7
.0508	128.2
.0625	84.67
.064	80.75
.072	63.80
.0808	50.66
.0907	40.21
.1019	31.85
.1285	20.03
.2576	4.984

Table A-8. Table of Weights - Iron

Angle

Size	Lbs Per Linear Ft
1 1/16 x 1 x 1	0.40
1/8 x 3/4 x 3/4	0.59
1/8 x 1 x 1	0.80
1/8 x 1 1/2 x 1 1/2	1.23
1/8 x 1 3/4 x 1 3/4	1.44
1/8 x 2 x 2	1.65
3/16 x 1 x 1	1.16
3/16 x 1 1/4 x 1 1/4	1.48
3/16 x 1 1/2 x 1 1/2	1.80
3/16 x 1 1/2 x 2	2.12
3/16 x 2 x 2 1/2	2.75
3/16 x 2 1/2 x 2 1/2	3.07
1/4 x 1 1/4 x 1 1/4	1.92
1/4 x 1 1/2 x 1 1/2	2.34
1/4 x 2 x 2	3.19
1/4 x 2 1/2 x 2 1/2	4.10
1/4 x 3 x 3	4.9
1/4 x 4 x 4	6.6
5/16 x 2 1/2 x 3	5.6
5/16 x 3 x 3	6.1
3/8 x 1 1/2 x 1 1/2	3.35
3/8 x 2 1/2 x 2 1/2	5.90
5/8 x 6 x 6	24.2

Sheet-Black

Thickness	Lbs Per Sq Ft
.0156	0.625
.0188	0.75
.025	1.00
.032	1.25
.0375	1.50
.0438	1.723
.050	2.00
.0625	2.55
.0781	3.2
.093	3.757
.125	5.1
.156	6.4
.1875	7.56
.250	10.2
.375	15.178
.500	20.4

Sheet-Galvanized

Thickness	Lbs Per Sq Ft
.0156	0.781
.0188	0.906
.025	1.156
.032	1.406
.0375	1.656
.0438	1.9064
.050	2.156
.0625	2.62
.0938	3.9603
.125	5.1563

Sheet-Terne Plate

Size	Lbs Per Sq Ft
.0156	0.6377
.0186	0.7685
.025	1.022
.0313	1.2795
.037	1.5329
.050	2.044

Table A-9. Table of Weights - Lead

Sheet

Thickness	Lbs Per Sq Ft
1/32	2.10
1/16	4.25
3/52	6.031
1/8	7.812
3/16	11.720

Table A-10. Table of Weights - Magnesium and Magnesium Alloy

Bars-Flat

Size	Lbs Per Linear Ft
1/2 x 1	0.372
1/2 x 2	0.756
3/4 x 2	1.135
3/4 x 3	1.700
1 x 2	1.513
1 x 3	2.270
1 1/2 x 2	2.290
1 3/4 x 3 1/2	4.630
2 x 3	4.535
2 3/4 x 4	8.320
3 x 4	9.240

Bars-Hexagon

Size	Lbs Per Linear Ft
3/8	0.095
7/16	0.129
1/2	0.169
9/16	0.213
5/8	0.263
3/4	0.412
1	0.674
1 1/4	1.043
1 1/2	1.510

Rods-Round

Size	Lbs Per Linear Ft
3/16	0.021
1/4	0.037
3/16	0.058
3/8	0.083

Table A-10. Table of Weights - Magnesium and Magnesium Alloy - Continued

7/16	0.114
1/2	0.148
3/16	0.188
5/8	0.232
11/16	0.280
3/4	0.334
13/16	0.392
7/8	0.454
15/16	0.522
1	0.593
1 1/4	0.927
1 3/8	1.122
1 1/2	1.348
1 3/4	1.818
2	2.385
2 1/2	3.710
2 3/4	4.480
3	5.340
3 1/2	7.450
4	9.800

Sheets

Thickness	Lbs Per Sq Ft
.0126	0.1158
.020	0.1814
.016	0.1451
.0253	0.230
.032	0.290
.0359	0.3258
.0403	0.366
.0508	0.462
.0641	0.582
.0808	0.733
.128	1.167
.0907	1.823
.156	1.418
.1875	1.708
.250	2.270
.375	3.405
.500	4.650

Table A-11. Table of Weights - Nickel Chromium Iron Alloy (Inconel)

Rods-Round

Size	Lbs Per Linear Ft
1/4	0.182
3/16	0.285
3/8	0.409
1/2	0.728
3/4	1.638
1	2.912
1 1/4	4.55
1 1/2	6.553
2	11.651
2 1/2	18.203
.250	11.12

Sheets

Thickness	Lbs Per Sq Ft
.018	0.84
.025	1.11
.032	1.39
.037	1.65
.043	1.91
.050	2.22
.0625	2.76
.093	4.14
.125	5.56
.156	6.94
.1875	8.32

Tubing

Size	Lbs Per Linear Ft
1/4 x .028	0.071
1/4 x .035	0.088
1/4 x .049	0.113
1/4 x .065	0.139
5/16 x .028	0.091
5/16 x .035	0.113
5/16 x .049	0.150
5/16 x .065	0.188
3/8 x .028	0.113
3/8 x .035	0.139
3/8 x .049	0.188
3/8 x .058	0.217
3/8 x .065	0.236
1/2 x .035	0.191
1/2 x .049	0.257
1/2 x .058	0.299
1/2 x .065	0.329
5/8 x .049	0.329
5/8 x .065	0.424
3/4 x .035	0.292
3/4 x .049	0.400
3/4 x .058	0.468
3/4 x .065	0.519
7/8 x .035	0.343
7/8 x .049	0.472
7/8 x .058	0.552
7/8 x .065	0.613
1 x .035	0.393
1 x .049	0.543
1 x .058	0.636
1 x .065	0.708
1 1/4 x .049	0.686
1 1/4 x .065	0.897
1 3/8 x .049	0.757
1 3/8 x .065	0.988
1 1/2 x .035	0.597
1 1/2 x .049	0.828
1 1/2 x .065	1.09
1 3/4 x .049	0.969
1 3/4 x .065	1.28
2 x .049	1.11
2 x .065	1.46
2 1/4 x .049	1.26
2 1/4 x .065	1.65
2 1/2 x .049	1.40
2 1/2 x .065	1.84
3 1/4 x .120	4.38

Table A-12. Table of Weights - Nickel Copper Alloy

Rods-Round

Size	Lbs Per Linear Ft
1/4	0.190
3/16	0.309
3/8	0.428
1/2	0.761
3/4	1.172
1	3.044
1 1/4	4.756
1 1/2	6.849
2	12.178
2 1/2	19.027

Sheets

Thickness	Lbs Per Sq Ft
.018	0.86
.025	1.15
.032	1.44
.037	1.72
.125	5.75

Table A-13. Table of Weights - Steel

Bars-Flat

Size	Lbs Per Linear Ft
1/14 x 1/2	0.106
1/14 x 3/4	0.1594
1/14 x 1	0.212
1/14 x 1 1/2	0.319
1/14 x 2	0.425
1/14 x 2 1/2	0.531
1/14 x 3	0.638
1/8 x 1/2	0.2125
1/8 x 3/4	0.3188
1/8 x 1	0.425
1/8 x 1 1/2	0.638
1/8 x 2	0.850
1/8 x 2 1/2	1.06
1/8 x 3	1.27
3/16 x 1/2	0.319
3/16 x 3/4	0.478
3/16 x 1	0.638
3/16 x 1 1/4	0.797
3/16 x 1 1/2	0.956
3/16 x 2	1.28
3/16 x 2 1/2	1.59
3/16 x 3	1.91

Table A-13. Table of Weights - Steel - Continued

1/4 x 1/2	0.425
1/4 x 3/4	0.636
1/4 x 1	0.850
1/4 x 1 1/4	1.06
1/4 x 1 1/2	1.28
1/4 x 1 3/4	1.49
1/4 x 2	1.70
1/4 x 2 1/2	2.13
1/4 x 3	2.55
3/16 x 1/2	0.531
3/16 x 3/4	0.797
5/16 x 1	1.06
5/16 x 1 1/4	1.33
5/16 x 1 1/2	1.59
5/16 x 1 3/4	1.86
5/16 x 2	2.13
5/16 x 2 1/4	2.39
5/16 x 2 1/2	2.66
5/16 x 2 3/4	2.92
5/16 x 3	3.19
3/8 x 1/2	0.638
3/8 x 1	1.28
3/8 x 1 1/4	1.59
3/8 x 1 1/2	1.91
3/8 x 2	2.55
3/8 x 2 1/2	3.19
3/8 x 3	3.83
3/8 x 3 1/2	4.46
3/8 x 4	5.10
3/8 x 6	7.65
1/2 x 1	1.70
1/2 x 1 1/4	2.13
1/2 x 1 1/2	2.55
1/2 x 2	3.40
1/2 x 2 1/2	4.25
1/2 x 3	5.10
1/2 x 3 1/2	5.95
1/2 x 4	6.80
1/2 x 4 1/2	7.65
1/2 x 5	8.50
1/2 x 6	10.20
5/8 x 2	4.25
5/8 x 2 1/2	5.31
5/8 x 3	6.38
5/8 x 3 1/2	7.44
5/8 x 4	8.50
5/8 x 6	12.75
3/4 x 1	2.55
3/4 x 1 1/2	3.85
3/4 x 2	5.10
3/4 x 2 1/2	6.38
3/4 x 3	7.65
3/4 x 4	10.20
3/4 x 5	12.75
3/4 x 6	15.30
1 x 2	6.80
1 x 2 1/2	8.50
1 x 3	10.20
1 x 4	13.60
1 x 5	17.00
1 x 6	20.40
1 1/4 x 2	8.50
1 1/4 x 3	12.75
1 1/4 x 4	17.00
1 1/2 x 2	10.20
1 1/2 x 3	15.30
1 1/2 x 5	25.50
2 x 2 1/2	17.00
2 x 3	20.40
2 x 4	27.20
2 1/2 x 3	25.50
3 x 4	40.80

Bars-Hexagon

Size	Lbs Per Linear Ft
1/4	0.195
5/16	0.29
3/8	0.43
7/16	0.56
1/2	0.73
9/16	0.93
5/8	1.15
11/16	1.40
3/4	1.66
13/16	1.91
7/8	2.25
13/16	2.58
1	2.94
1 1/16	3.33
1 1/8	3.73
1 1/4	4.60
1 5/16	5.07
1 3/8	5.57
1 1/2	6.62
1 3/4	9.00
2	11.78

Bars-Square

Size	Lbs Per Linear Ft
1/8	0.053
3/16	0.120
1/4	0.212
5/16	0.332
3/8	0.478
7/16	0.651
1/2	0.850
9/16	1.076
5/8	1.328
3/4	1.913
7/8	2.603
1	3.40
1 1/8	4.303
1 1/4	5.313
1 5/16	5.857
1 3/8	6.428
1 1/2	7.650
1 3/4	10.41
2	13.60
2 1/4	17.21
2 1/2	21.25
3	30.60

Rods-Rounds

Size	Lbs Per Linear Ft
1/16	0.010
3/32	0.023
1/8	0.042
5/32	0.065
3/16	0.094
7/32	0.128
1/4	0.167
9/32	0.211
5/16	0.261
11/22	0.316
3/8	0.376
7/16	0.511
1/2	0.668
9/16	0.845
5/8	1.043
11/16	1.262
3/4	1.502
13/16	1.763
7/8	2.044
15/16	2.347
1	2.670
1 1/16	3.015
1 1/8	3.380
1 3/16	3.766
1 1/4	4.172
1 3/8	5.049
1 7/16	5.518
1 1/2	6.008
1 5/8	7.051
1 3/4	8.178
1 7/8	9.388
2	10.68
2 1/4	13.52
2 5/16	14.28
2 3/8	15.06
2 1/2	16.69
2 3/4	20.19
3	24.03
3 1/4	28.21
3 1/2	32.71
3 3/4	37.55
4	42.73
4 1/2	54.07
5	66.76
5 1/2	80.78
6	96.13
7	130.8
8	170.9

Sheets

Thickness	Lbs Per Sq Ft
.0156	0.6377
.020	0.8952
.025	1.022
.03125	1.2795
.0375	1.5329
.050	2.044
.0625	2.5549
.0781	3.1928
.093	3.8344
.109	4.4557
.125	5.1096
.156	6.377
.1875	7.6851
.250	10.219

Tubing-Round

Table A-13. Table of Weights - Steel - Continued

Size	Lbs Per Linear Ft
3/16 x .028	0.0476
3/16 x .035	0.0569
1/4 x .028	0.0663
1/4 x .035	0.0803
1/4 x .049	0.1051
1/4 x .058	0.1188
1/4 x .065	0.1283
5/16 x .028	0.0850
5/16 x .035	0.1036
5/16 x .049	0.1378
5/16 x .058	0.1575
5/16 x .065	0.1716
5/16 x .095	0.2204
3/8 x .028	0.1037
3/8 x .035	0.1270
3/8 x .049	0.1704
3/8 x .058	0.1962
3/8 x .065	0.2150
3/8 x .083	0.2586
3/8 x .095	0.2838
7/16 x .028	0.1223
7/16 x .035	0.1503
7/16 x .049	0.2030
7/16 x .065	0.2583
7/16 x .083	0.3139
7/16 x .095	0.3471
1/2 x .028	0.1410
1/2 x .035	0.1736
1/2 x .042	0.2052
1/2 x .049	0.2358
1/2 x .058	0.2735
1/2 x .065	0.3017
1/2 x .083	0.3693
1/2 x .095	0.4105
9/16 x .035	0.1969
9/16 x .049	0.2684
9/16 x .065	0.3450
9/16 x .095	0.4738
5/8 x .028	0.1783
5/8 x .035	0.2203
5/8 x .049	0.3011
5/8 x .058	0.3509
5/8 x .065	0.3883
5/8 x .083	0.480
5/8 x .095	0.5372
5/8 x .120	0.6465
11/14 x .035	0.2437
11/14 x .049	0.3338
11/14 x .065	0.4317
11/14 x .095	0.6005
3/4 x .028	0.2157
3/4 x .035	0.2670
3/4 x .049	0.3665
3/4 x .058	0.4282
3/4 x .065	0.4750
3/4 x .083	0.5906
3/4 x .095	0.6639
3/4 x .120	0.8066
13/14 x .035	0.2903
13/16 x .049	0.3991
13/16 x .058	0.4669
13/16 x .065	0.5184
7/8 x .028	0.2530
7/8 x .035	0.3137
7/8 x .049	0.4318
7/8 x .058	0.5056
7/8 x .065	0.5617
7/8 x .095	0.7906
7/8 x .120	0.9666
15/16 x .035	0.3370
15/16 x .049	0.4645
15/16 x .065	0.6051
15/16 x .083	0.7567
1 x .028	0.2904
1 x .035	0.3603
1 x .049	0.4972
1 x .058	0.5829
1 x .065	0.6484
1 x .083	0.8120
1 x .095	0.9173
1 x .120	1.127
1 1/16 x .035	0.3837
1 1/16 x .049	0.5298
1 1/16 x .065	0.6917
1 1/8 x .035	0.4070
1 1/8 x .049	0.5625
1 1/8 x .058	0.6603
1 1/8 x .065	0.7351
1 1/8 x .083	0.9227
1 1/8 x .095	1.044
1 1/8 x .120	1.287
1 3/16 x .035	0.4304
1 3/16 x .049	0.5952
1 3/16 x .065	0.7784
1 3/16 x .095	1.107
1 3/16 x .120	1.367
1 1/4 x .028	0.3650
1 1/4 x .035	0.4537
1 1/4 x .049	0.6279
1 1/4 x .058	0.7376
1 1/4 x .065	0.8218
1 1/4 x .083	1.034
1 1/4 x .095	1.171
1 1/4 x .120	1.447
1 1/4 x .125	1.500
1 1/4 x .134	1.595
1 5/16 x .035	0.4770
1 5/16 x .049	0.6605
1 5/16 x .065	0.8651
1 5/16 x .095	1.234
1 5/16 x .120	1.527
1 3/8 x .035	0.5004
1 3/8 x .049	0.6932
1 3/8 x .058	0.8150
1 3/8 x .065	0.9085
1 3/8 x .083	1.144
1 3/8 x .120	1.607
1 7/16 x .049	0.7259
1 7/16 x .065	0.9518
1 7/16 x .095	1.361
1 1/2 x .035	0.5470
1 1/2 x .040	0.7585
1 1/2 x .058	0.8923
1 1/2 x .065	0.9951
1 1/2 x .083	1.255
1 1/2 x .095	1.424
1 1/2 x .120	1.767
1 1/2 x .1875	2.626
1 9/16 x .049	0.7912
1 9/16 x .065	1.038
1 9/16 x .095	1.487
1 5/8 x .049	0.8239
1 5/8 x .058	0.9697
1 5/8 x .065	1.082
1 5/8 x .083	1.365
1 5/8 x .095	1.551
1 5/8 x .120	1.927
1 11/16 x .049	0.8566
1 11/16 x .065	1.125
1 11/16 x .095	1.614
1 3/4 x .035	0.6404
1 3/4 x .049	0.8892
1 3/4 x .058	1.047
1 3/4 x .065	1.169
1 3/4 x .083	1.476
1 3/4 x .095	1.677
1 3/4 x .120	2.087
1 3/4 x .125	2.167
1 3/4 x .1875	3.126
1 13/16 x .049	0.9219
1 13/16 x .065	1.212
1 13/16 x .095	1.741
1 7/8 x .049	0.9546
1 7/8 x .058	1.124
1 7/8 x .065	1.255
1 7/8 x .095	1.804
1 7/8 x .120	2.247
1 15/16 x .049	0.9873
1 15/16 x .065	1.299
1 15/16 x .095	1.867
2 x .035	0.7338
2 x .049	1.020
2 x .058	1.202
2 x .065	1.340
2 x .083	1.698
2 x .095	1.931
2 x .120	2.407
2 x .125	2.501
2 x .1875	3.626
2 1/8 x .035	0.7804
2 1/8 x .049	1.085
2 1/8 x .058	1.279
2 1/8 x .065	1.429
2 1/8 x .095	2.057
2 1/8 x .120	2.567
2 1/4 x .035	0.8271
2 1/4 x .049	1.151
2 1/4 x .058	1.356
2 1/4 x .065	1.515
2 1/4 x .083	1.919
2 1/4 x .095	2.184
2 1/4 x .120	2.727
2 1/4 x .125	2.834
2 1/4 x .1875	4.126
2 3/8 x .049	1.216

Table A-13. Table of Weights - Steel - Continued

2 3/8 x .065	1.602
2 3/8 x .095	2.311
2 3/8 x .120	2.887
2 1/2 x .049	1.281
2 1/2 x .065	1.689
2 1/2 x .083	2.140
2 1/2 x .095	2.438
2 1/2 x .120	3.047
2 1/2 x .125	3.167
2 3/4 x .083	2.362
2 3/4 x .095	2.691
2 3/4 x .120	3.367
2 3/4 x .125	3.501
3 x .095	2.944
3 x .120	3.687
3 3/4 x .120	4.647
3 3/4 x .15625	5.991
3 3/4 x .1875	7.127

Tubing-Streamline

Size	Lbs Per Linear Ft
1.697 x .707 x .049	0.6279
1.70 x .70 x .035	0.4537
1.874 x .781 x .035	0.5004
1.875 x .786 x .049	0.6932
2.047 x .854 x .049	0.7585
2.047 x .854 x .058	0.8923
2.215 x .823 x .035	0.5937
2.21875 x .921 x .049	0.8239
2.386 x .994 x .049	0.8892
2.386 x .994 x .058	1.047
2.386 x .994 x .065	1.169
2.726 x 1.136 x .035	0.7338
3.00 x .375 x .035	0.7338
3.067 x 1.278 x .049	1.151
3.067 x 1.278 x .065	1.515
3.748 x 1.563 x .083	2.362

Wire

Thickness	No. of Ft Per Lb
.006	10415.
.008	5858.
.009	4629.
.010	3749.
.011	2936.
.012	2604.
.013	2218.
.014	1913.
.016	1465.
.018	1157.
.020	937.3
.024	650.9
.025	599.9
.028	478.2
.031	383.9
.032	366.1
.035	306.1
.036	289.3
.040	234.3
.041	223.
.045	182.7
.047	166.2
.049	156.2
.0508	145.3
.054	128.6
.058	111.5
.0625	95.98
.0641	91.25
.071	72.32
.080	58.58
.0907	45.58
.101	36.11
.118	26.04
.1285	22.71
.162	14.29

Table A-14. Table of Weights - Zinc

Sheet

Thickness	Lbs Per Sq Ft
.018	0.67
.032	1.20
.045	1.68
.049	1.87
.0508	1.87
.109	3.98

Table A-15. Temperature Conversion Chart

−459.4 to −220			−210 to 0			1 to 25			26 to 50			51 to 75			76 to 100			101 to 340			341 to 490			491 to 760		
C	C or F	F	C	C or F	F	C	C or F	F	C	C or F	F	C	C or F	F	C	C or F	F	C	C or F	F	C	C or F	F	C	C or F	F
−273	−459.4		−134	−210	−346	−17.2	1	33.8	− 3.33	26	78.8	10.6	51	123.8	24.4	76	168.8	43	110	230	177	350	662	260	500	932
−268	−450		−129	−200	−328	−16.7	2	35.6	− 2.78	27	80.6	11.1	52	125.6	25.0	77	170.6	49	120	248	182	360	680	266	510	950
−262	−440		−123	−190	−310	−16.1	3	37.4	− 2.22	28	82.4	11.7	53	127.4	25.6	78	172.4	54	130	266	188	370	698	271	520	968
−257	−430		−118	−180	−292	−15.6	4	39.2	− 1.67	29	84.2	12.2	54	129.2	26.1	79	174.2	60	140	284	193	380	716	277	530	986
−251	−420		−112	−170	−274	−15.0	5	41.0	− 1.11	30	86.0	12.8	55	131.0	26.7	80	176.0	66	150	302	199	390	734	282	540	1004
−246	−410		−107	−160	−256	−14.4	6	42.8	− 0.56	31	87.8	13.3	56	132.8	27.2	81	177.8	71	160	320	204	400	752	288	550	1022
−240	−400		−101	−150	−238	−13.9	7	44.6	0	32	89.6	13.9	57	134.6	27.8	82	179.6	77	170	338	210	410	770	293	560	1040
−234	−390		− 95.6	−140	−220	−13.3	8	46.4	0.56	33	91.4	14.4	58	136.4	28.3	83	181.4	82	180	356	216	420	788	299	570	1058
−229	−380		− 90.0	−130	−202	−12.8	9	48.2	1.11	34	93.2	15.0	59	138.2	28.9	84	183.2	88	190	374	221	430	806	304	580	1076
−223	−370		− 84.4	−120	−184	−12.2	10	50.0	1.67	35	95.0	15.6	60	140.0	29.4	85	185.0	93	200	392	227	440	824	310	590	1094
−218	−360		− 78.9	−110	−166	−11.7	11	51.8	2.22	36	96.8	16.1	61	141.8	30.0	86	186.8	99	210	410	232	450	842	316	600	1112
−212	−350		− 73.3	−100	−148	−11.1	12	53.6	2.78	37	98.6	16.7	62	143.6	30.6	87	188.6	100	212	413	238	460	860	321	610	1130
−207	−340		− 67.8	− 90	−130	−10.6	13	55.4	3.33	38	100.4	17.2	63	145.4	31.1	88	190.4	104	220	428	243	470	878	327	620	1148
−201	−330		− 62.2	− 80	−112	−10.0	14	57.2	3.89	39	102.2	17.8	64	147.2	31.7	89	192.2	110	230	446	249	480	896	332	630	1166
−196	−320		− 56.7	− 70	− 94	− 9.44	15	59.0	4.44	40	104.0	18.3	65	149.0	32.2	90	194.0	116	240	464	254	490	914	338	640	1184
−190	−310		− 51.1	− 60	− 76	− 8.89	16	30.8	5.00	41	105.8	18.9	66	150.8	32.8	91	195.8	121	250	482				343	650	1202
−184	−300		− 45.6	− 50	− 68	− 8.33	17	62.6	5.56	42	107.6	19.4	67	152.6	33.3	92	197.6	127	260	500				349	660	1220
−179	−290		− 40.0	− 40	− 40	− 7.78	18	64.4	6.11	43	109.4	20.0	68	154.4	33.9	93	199.4	132	270	518				354	670	1238
−173	−280		− 34.4	− 30	− 22	− 7.22	19	66.2	6.67	44	111.2	20.6	69	156.2	34.4	94	201.2	138	280	536				360	680	1256
−169	−273	−459.4	− 28.9	− 20	− 4	− 6.67	20	68.0	7.22	45	113.0	21.1	70	158.0	35.0	95	203.0	143	290	554				366	690	1274
−168	−270	−454	− 23.3	− 10	14	− 6.11	21	69.8	7.78	46	114.8	21.7	71	159.8	35.6	96	204.8	149	300	572				371	700	1292
−162	−260	−436	− 17.8	0	32	− 5.56	22	71.6	8.33	47	116.6	22.2	72	161.6	36.1	97	206.6	154	310	590				377	710	1310
−157	−250	−418				− 5.00	23	73.4	8.89	48	118.4	22.8	73	163.4	36.7	98	208.4	160	320	608				382	720	1328
−151	−240	−400				− 4.44	24	75.2	9.44	49	120.2	23.3	74	165.2	37.2	99	210.2	166	330	626				388	730	1346
−146	−230	−382				− 3.89	25	77.0	10.0	50	122.0	23.9	75	167.0	37.8	100	212.0	171	340	644				393	740	1364
−140	−220	−364																						399	750	1382

751 to 1000			1001 to 1250			1251 to 1490			1491 to 1750			1751 to 2000			2001 to 2250			2251 to 2490			2491 to 2750			2751 to 3000		
C	C or F	F	C	C or F	F	C	C or F	F	C	C or F	F	C	C or F	F	C	C or F	F	C	C or F	F	C	C or F	F	C	C or F	F
404	760	1400	543	1010	1850	682	1260	2300	816	1500	2732	960	1760	3200	1099	2010	3650	1238	2260	4100	1371	2500	4532	1516	2760	5000
410	770	1418	549	1020	1868	688	1270	2318	821	1510	2750	966	1770	3218	1104	2020	3668	1243	2270	4118	1377	2510	4550	1521	2770	5018
416	780	1436	554	1030	1886	693	1280	2336	827	1520	2768	971	1780	3236	1110	2030	3686	1249	2280	4136	1382	2520	4568	1527	2780	5036
421	790	1454	560	1040	1904	699	1290	2354	832	1530	2786	977	1790	3254	1116	2040	3704	1254	2290	4154	1388	2530	4586	1532	2790	5054
427	800	1472	566	1050	1922	704	1300	2372	838	1540	2804	982	1800	3272	1121	2050	3722	1260	2300	4172	1393	2540	4604	1538	2800	5072
432	810	1490	571	1060	1940	710	1310	2390	843	1550	2822	988	1810	3290	1127	2060	3740	1266	2310	4190	1399	2550	4622	1543	2810	5090
438	820	1508	577	1070	1958	716	1320	2408	849	1560	2840	993	1820	3308	1132	2070	3758	1271	2320	4208	1404	2560	4640	1549	2820	5108
443	830	1526	582	1080	1976	721	1330	2426	854	1570	2858	999	1830	3326	1138	2080	3776	1277	2330	4226	1410	2570	4658	1554	2830	5126
449	840	1544	588	1090	1994	727	1340	2444	860	1580	2876	1004	1840	3344	1143	2090	3794	1282	2340	4244	1416	2580	4676	1560	2840	5144
454	850	1562	593	1100	2012	732	1350	2462	866	1590	2894	1010	1850	3362	1149	2100	3812	1288	2350	4262	1421	2590	4694	1566	2850	5162
460	860	1580	599	1110	2030	738	1360	2480	871	1600	2912	1016	1860	3380	1154	2110	3830	1293	2360	4280	1427	2600	4712	1571	2860	5180
466	870	1598	604	1120	2048	743	1370	2498	877	1610	2930	1021	1870	3398	1160	2120	3848	1299	2370	4298	1432	2610	4730	1577	2870	5198
471	880	1616	610	1130	2066	749	1380	2516	882	1620	2948	1027	1880	3416	1166	2130	3866	1304	2380	4316	1438	2620	4748	1582	2880	5216
477	890	1634	616	1140	2084	754	1390	2534	888	1630	2966	1032	1890	3434	1171	2140	3884	1310	2390	4334	1443	2630	4766	1588	2890	5234
482	900	1652	621	1150	2102	760	1400	2552	893	1640	2984	1038	1900	3452	1177	2150	3902	1316	2400	4352	1449	2640	4784	1593	2900	5252
488	910	1670	627	1160	2120	766	1410	2570	899	1650	3002	1043	1910	3470	1182	2160	3920	1321	2410	4370	1454	2650	4802	1599	2910	5270
493	920	1688	632	1170	2138	771	1420	2588	904	1660	3020	1049	1920	3488	1188	2170	3938	1327	2420	4388	1460	2660	4820	1604	2920	5288
499	930	1706	638	1180	2156	777	1430	2606	910	1670	3038	1054	1930	3506	1193	2180	3956	1332	2430	4406	1466	2670	4838	1610	2930	5306
504	940	1724	643	1190	2174	782	1440	2624	916	1680	3056	1060	1940	3524	1199	2190	3974	1338	2440	4424	1471	2680	4856	1616	2940	5324
510	950	1742	649	1200	2192	788	1450	2642	921	1690	3074	1066	1950	3542	1204	2200	3992	1343	2450	4442	1477	2690	4874	1621	2950	5342
516	960	1760	654	1210	2210	793	1460	2660	927	1700	3092	1071	1960	3560	1210	2210	4010	1349	2460	4460	1482	2700	4892	1627	2960	5360
521	970	1778	660	1220	2228	799	1470	2678	932	1710	3110	1077	1970	3578	1216	2220	4028	1354	2470	4478	1488	2710	4910	1632	2970	5378
527	980	1796	666	1230	2246	804	1480	2696	938	1720	3128	1082	1980	3596	1221	2230	4046	1360	2480	4496	1493	2720	4928	1638	2980	5396
532	990	1814	671	1240	2264	810	1490	2714	943	1730	3146	1088	1990	3614	1227	2240	4064	1366	2490	4514	1499	2730	4946	1643	2990	5414
538	1000	1832	677	1250	2282				949	1740	3164	1093	2000	3632	1232	2250	4082				1504	2740	4964	1649	3000	5432
									954	1750	3182										1510	2750	4982			

NOTE—The numbers in bold face type refer to the temperature either in degrees Centigrade or Fahrenheit which it is desired to convert into the other scale. If converting from Fahrenheit degrees to Centigrade degrees the equivalent temperature will be found in the left column, while if converting from degrees Centigrade to degrees Fahrenheit, the answer will be found in the column on the right.

$$°F = \frac{9}{5}(°C) + 32$$

$$°C = \frac{5}{9}(°F - 32)$$

INTERPOLATION FACTORS

C		F	C		F
0.56	1	1.8	3.33	6	10.8
1.11	2	3.6	3.89	7	12.6
1.67	3	5.4	4.44	8	14.4
2.22	4	7.2	5.00	9	16.2
2.78	5	9.0	5.56	10	18.0

L 690848

Table A-16. Standard Bend Radii for 90° Cold Forming-Flat Sheet

	MATERIAL	MATERIAL CONDITION	FORMING TEMP	GAUGE 0.008	0.012	0.016	0.020	0.025	0.032	0.040	0.050	0.063	0.071	0.080	0.090	0.100	0.125	0.160	0.190	0.250
ALUMINUM	3003-0, 5052-0. 6061-0	NOTED	ROOM		0.03	0.03	0.03	0.03	0.03	0.06	0.06	0.06	0.09	0.09	0.12	0.12	0.16	0.16	0.19	0.25
ALUMINUM	2014-0, 2024-0, 5052-H34, 6061-T4, 7075-0, 7178-0	NOTED	ROOM		0.03	0.03	0.03	0.03	0.06	0.06	0.06	0.09	0.09	0.12	0.16	0.16	0.19	0.25	0.31	0.44
ALUMINUM	2014-T4, 2024-T3, 2024-T4, 6061-T6, 7075-W, 7178-W	NOTED	ROOM		0.03	0.03	0.03	0.06	0.09	0.09	0.12	0.16	0.19	0.22	0.25	0.31	0.38	0.44	0.69	1.00
ALUMINUM	2014-T6, 2024-T36, 7075-T6, 7178-T6	NOTED	ROOM		0.06	0.06	0.08	0.09	0.12	0.19	0.25	0.31	0.38	0.44	0.50	0.56	0.69	0.88	1.00	1.50
ALUMINUM	2024-W	NOTED	ROOM		0.03	0.03	0.03	0.03	0.06	0.06	0.09	0.12	0.12	0.16	0.18	0.22	0.25	0.31	0.44	0.69
ALUMINUM	7075-T6	NOTED	HOT 300°F ± 25°		0.06	0.06	0.06	0.06	0.06	0.06	0.09	0.14	0.15	0.15	0.18	0.22	0.31	0.38	0.50	0.69
ALUMINUM	7178-T6	NOTED	HOT 275°F ± 25°		0.06	0.06	0.06	0.06	0.06	0.06	0.09	0.14	0.15	0.15	0.18	0.22	0.31	0.38	0.50	0.69
MAGNESIUM	AZ31A(SPEC.QQ-M-44)	A	HOT 400°F-625°F			0.03	0.06	0.06	0.06	0.09	0.09	0.12	0.16	0.19	0.19	0.22	0.25	0.31	0.38	0.50
MAGNESIUM	AZ31A(SPEC.QQ-M-44)	A	ROOM			0.09	0.09	0.12	0.16	0.19	0.25	0.31	0.38	0.44	0.44	0.50	0.62	0.75	1.00	1.25
MAGNESIUM	AZ31A(SPEC.QQ-M-44)	H	HOT 325°F ± 25°			0.06	0.09	0.12	0.12	0.22	0.25	0.38	0.44	0.44	0.44	0.44	0.50	0.62	0.81	1.00
MAGNESIUM	AZ31A(SPEC.QQ-M-44)	H	ROOM			0.19	0.19	0.25	0.31	0.38	0.50	0.62	0.81	0.81	0.88	1.00	1.25	1.50	2.00	2.50

				GAUGE 0.008	0.012	0.016	0.020	0.025	0.032	0.036	0.040	0.050	0.063	0.080	0.090	0.112	0.125	0.160	0.190	0.250
STEEL	1025		ROOM	0.03	0.03	0.03	0.06	0.06	0.06	0.06	0.09	0.09	0.12	0.16	0.19	0.22	0.25	0.31	0.38	0.50
STEEL	4130	65,000 TO 90,000 PSI	ROOM	0.03	0.03	0.03	0.06	0.06	0.06	0.06	0.09	0.09	0.12	0.16	0.19	0.22	0.25	0.31	0.38	0.50
STEEL	4130	90,000 TO 125,000 PSI	ROOM	0.03	0.03	0.06	0.06	0.09	0.09	0.12	0.12	0.16	0.19	0.25	0.31	0.38	0.44	0.50	0.62	0.75

L990084 9

Table A-16. Standard Bend Radii for 90° Cold Forming-Flat Sheet - Continued

	MATERIAL	MATERIAL CONDITION	MATERIAL TEMP	GAUGE																
				0.008	0.012	0.016	0.020	0.025	0.032	0.036	0.040	0.050	0.063	0.080	0.090	0.112	0.125	0.160	0.190	0.250
STEEL	Corrosion Resistant	ANNEALED	ROOM	0.03	0.03	0.03	0.03	0.03	0.03	0.03	0.03	0.06	0.06	0.09	0.12	0.12	0.16	0.16	0.19	0.25
STEEL	Corrosion Resistant	1/4 HARD	ROOM	0.03	0.03	0.03	0.03	0.06	0.06	0.06	0.06	0.09	0.09	0.12	0.16	0.19	0.22	0.25	0.31	0.38
STEEL	Corrosion Resistant	1/2 HARD	ROOM	0.03	0.03	0.06	0.06	0.09	0.09	0.12	0.12	0.16	0.16	0.19	0.25	0.31	0.38	0.50	0.62	0.75
STEEL	Corrosion Resistant	FULL HARD	ROOM	0.06	0.09	0.09	0.12	0.16	0.16	0.16	0.19	0.19	0.25	0.31	0.38	0.44	0.50	0.62	0.75	1.00
TITANIUM	Commercially Pure AMS 4901	ANNEALED	ROOM	0.03	0.03	0.06	0.06	0.09	0.09	0.12	0.12	0.16	0.19	0.25	0.31	0.38	0.38	0.44	0.56	0.75
TITANIUM	Alloy AMS 4908	ANNEALED	ROOM	0.03	0.03	0.06	0.06	0.09	0.09	0.12	0.12	0.16	0.19	0.25	0.31	0.38	0.38	0.44	0.56	0.75
TITANIUM	Alloy Convair Spec 0-01014	ANNEALED	ROOM			0.09	0.09	0.12	0.16	0.19	0.19	0.25	0.31	0.38	0.44	0.56	0.62	0.78	0.94	1.25

L9900850

Table A-17. Metal Bending and Bend Radii Bend Allowances Sheet Metal Bend Allowances Per Degree of Bend Aluminum Alloys

BEND RADIUS	Stock Thickness							
	0.022	0.032	0.040	0.051	0.064	0.091	0.128	0.187
	Bend Allowance per One Degree							
1/32	0.00072	0.00079	0.00086	0.00094	0.00104	0.00125	0.00154	0.00200
1/16	0.00126	0.00135	0.00140	0.00149	0.00159	0.00180	0.00209	0.00255
3/32	0.00180	0.00188	0.00195	0.00203	0.00213	0.00234	0.00263	0.00309
1/8	0.00235	0.00243	0.00249	0.00258	0.00268	0.00289	0.00317	0.00364
5/32	0.00290	0.00297	0.00304	0.00312	0.00322	0.00343	0.00372	0.00418
3/16	0.00344	0.00352	0.00358	0.00367	0.00377	0.00398	0.00426	0.00473
7/32	0.00398	0.00406	0.00412	0.00421	0.00431	0.00452	0.00481	0.00527
1/4	0.00454	0.00461	0.00467	0.00476	0.00486	0.00507	0.00535	0.00582
9/32	0.00507	0.00515	0.00521	0.00530	0.00540	0.00561	0.00590	0.00636
5/16	0.00562	0.00570	0.00576	0.00584	0.00595	0.00616	0.00644	0.00691
11/32	0.00616	0.00624	0.00630	0.00639	0.00649	0.00670	0.00699	0.00745
3/8	0.00671	0.00679	0.00685	0.00693	0.00704	0.00725	0.00753	0.00800
13/32	0.00725	0.00733	0.00739	0.00748	0.00758	0.00779	0.00808	0.00854
7/16	0.00780	0.00787	0.00794	0.00802	0.00812	0.00834	0.00862	0.00908
15/32	0.00834	0.00842	0.00848	0.00857	0.00867	0.00888	0.00917	0.00963
1/2	0.00889	0.00896	0.00903	0.00911	0.00921	0.00943	0.00971	0.01017
17/32	0.00943	0.00951	0.00957	0.00966	0.00976	0.00997	0.01025	0.01072
9/16	0.00998	0.01005	0.01012	0.01020	0.01030	0.01051	0.01080	0.01126
19/32	0.01051	0.01058	0.01065	0.01073	0.01083	0.01105	0.01133	0.01179

Table A-17. Metal Bending and Bend Radii Bend Allowances Sheet Metal Bend Allowances Per Degree of Bend Aluminum Alloys - Continued

BEND RADIUS	Stock Thickness							
	0.022	0.032	0.040	0.051	0.064	0.091	0.128	0.187
	Bend Allowance per One Degree							
5/8	0.01107	0.01114	0.01121	0.01129	0.01139	0.01160	0.01189	0.01235
21/32	0.01161	0.01170	0.01175	0.01183	0.01193	0.01214	0.01245	0.01289
11/16	0.01216	0.01223	0.01230	0.01238	0.01248	0.01268	0.01298	0.01344
23/32	0.01269	0.01276	0.01283	0.01291	0.01301	0.01322	0.01351	0.01397
3/4	0.01324	0.01332	0.01338	0.01347	0.01357	0.01378	0.01407	0.01453

Example: To determine bend allowance
Given: Stock = 0.064 aluminum alloy, Bend Radius = 1/8, Bend Angle = 50°
Find bend allowance for 1° in column for 0.064 Aluminum opposite 1/8 in column "Bend Radius".
Multiply this bend allowance (0.00268 in this case) by the number of degrees of the desired bend angle:
0.00268 x 50 = 0.1340 = total bend allowance to be added to the length of the straight sides of the part to determine the total length of the material needed.

Table A-18. Bend Set Back Chart

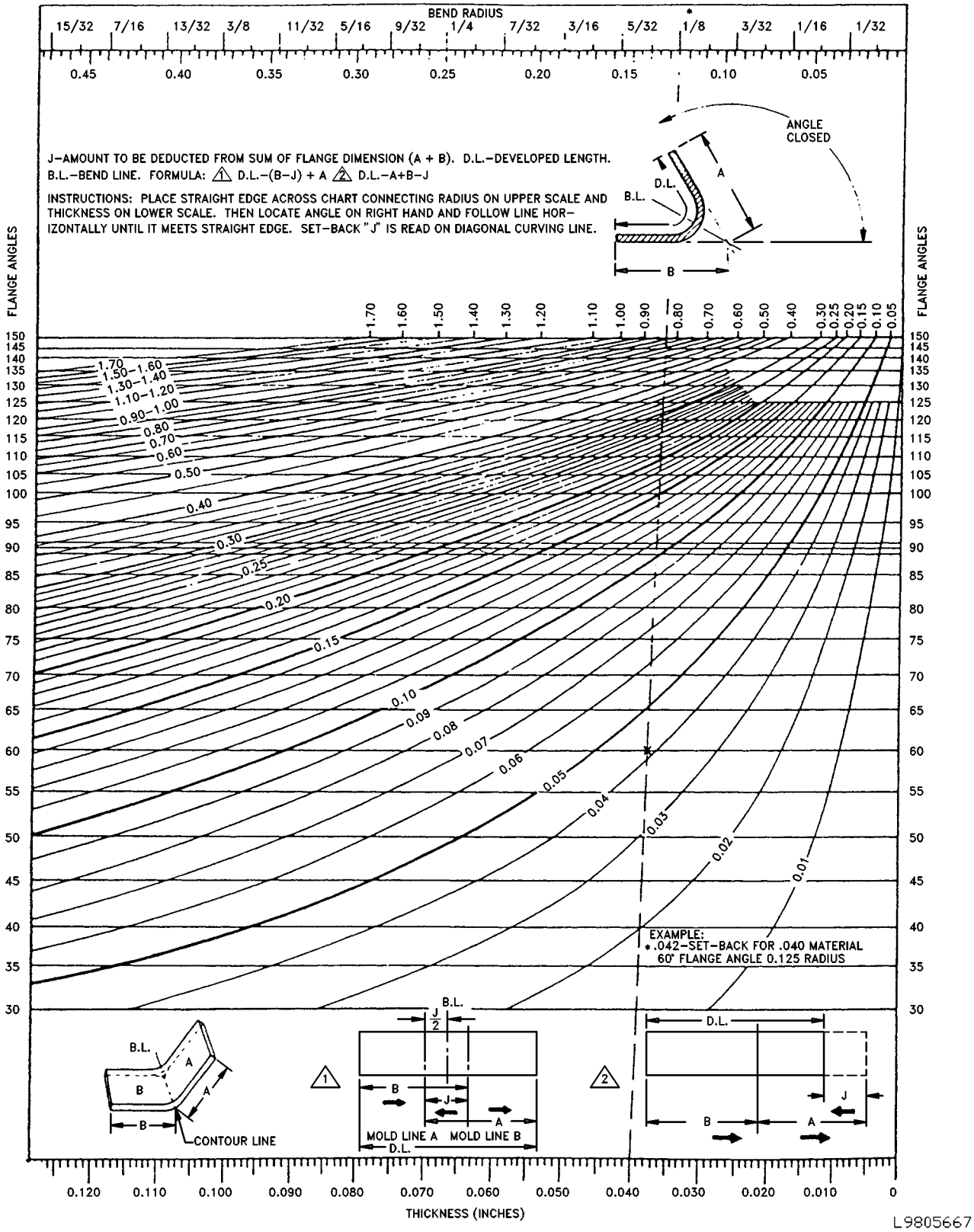

Table A-19. Comparative Table of Standard Gages

1. United States Steel Wire Gage (STL.W.G.) Also known as: National Wire, Standard Steel Wire, Steel Wire, American Steel and Wire Company, Roebling, Washburn and Moen Gages. Used for bare wire of galvanized, black annealed, bright basic tinned or copper coated, iron or steel, spring steel wire. Not used for telephone and telegraph wire.

2. British Imperial Standard Wire Gage (I.S.W.G.) or (N.B.S.) Also known as British Imperial Wire or English Legal Standard Gages. Used for bare copper telephone wires in the U.S. and for all wires and aluminum sheets in England.

3. Browne & Sharpe Gage (B.&S.G.) Also known as American or American Wire Gages. Used for bare wire of brass, phosphor bronze, German silver, aluminum, zinc and copper (not for copper telephone or telegraph wire). Also resistance wire of German silver and other alloys, and for insulated wire of aluminum and copper. Also for rods of brass, copper, phosphor bronze and aluminum; sheets of copper, brass, phosphor bronze, aluminum and German silver; brazed brass and brazed copper tubing.

4. Birmingham Wire Gage (B.W.G.) Also known as Birmingham, Stubs or Studs Iron Wire Gages. Used for iron and steel telephone and telegraph wire and strip steel, steel bands, hoop steel, crucible spring steel, round-edged flat wire, and with limited usage for copper sheets. Also for seamless brass, seamless copper, seamless steel, stainless steel and aluminum tubes, and for boiler tubes.

5. Standard Birmingham Sheet and Hoop Gage (B.G.) Used in England for iron and steel sheets and hoops.

6. United States Standard (Revised) (U.S.S.G.) Also known as U.S. Standard Sheet Metal or U.S. Standard for Steel and Iron Sheets and Plates Gages. This is a gage based on the weight per square foot of sheets rather than on thickness. It is used for commercial iron and steel sheets and plates including planished, galvanized, tinned and terne plates, black sheet iron, blue annealed soft steel, steel plate, hot-rolled sheet steel, cold-rolled sheet steel, hot-rolled monel metal, cold-rolled monel metal.

Other gages in use:
Trenton Iron Company Gage.
Zinc gage for sheet zinc only.
Birmingham Metal Gage-in England for brass sheets. American Steel and Wire Company's music wire gage. Twist Drill and Steel Wire Gage for twist drill and steel drill rods.

Gage Number	THICKNESS IN DECIMALS OF AN INCH						
						United States Standard (Revised) U.S.S.G.	
	United States Steel Wire (STL.W.G)	British Imperial Standard Wire (I.S.W.G.)	Browne & Sharpe (B.& S.G.)	Birmingham Wire (B.W.G.)	Standard Birmingham Sheet and Hoop (B.G.)	Thickness Approx.	Weight Oz/Sq Ft.
0000000	.4900	.500	-------	------	.6666	------	------
000000	.4615	.464	.580000	------	.6250	------	------
00000	.4305	.432	.516500	.500	.5883	------	------
0000	.3938	.400	.460000	.454	.5416	------	------
000	.3625	.372	.409642	.425	.5000	------	------
00	.3310	.348	.364796	.380	.4452	------	------
0	.3065	.324	.324861	.340	.3964	------	------
1	.2830	.300	.289297	.300	.3532	------	------
2	.2625	.276	.257627	.284	.3147	------	------
3	.2437	.252	.229423	.259	.2804	.2391	160
4	.2253	.232	.204307	.238	.2500	.2242	150
5	.2070	.212	.181940	.220	.2225	.2092	140
6	.1920	.192	.162023	.203	.1981	.1943	130
7	.1770	.176	.144285	.180	.1764	.1793	120
8	.1620	.160	.128490	.165	.1570	.1644	110
9	.1483	.144	.114423	.148	.1398	.1494	100
10	.1350	.128	.101897	.134	.1250	.1345	90
11	.1205	.116	.090742	.120	.1113	.1196	80
12	.1055	.104	.080808	.109	.0991	.1046	70
13	.0915	.092	.071962	.095	.0882	.0897	60
14	.0800	.080	.064084	.083	.0785	.0749	50
15	.0720	.072	.057068	.072	.0699	.0673	45
16	.0625	.064	.050821	.065	.0625	.0598	40
17	.0540	.056	.045257	.058	.0556	.0538	36
18	.0475	.048	.040303	.049	.0495	.0478	32

Table A-19. Comparative Table of Standard Gages - Continued

Gage Number	THICKNESS IN DECIMALS OF AN INCH						
	United States Steel Wire (STL.W.G)	British Imperial Standard Wire (I.S.W.G.)	Browne & Sharpe (B.& S.G.)	Birmingham Wire (B.W.G.)	Standard Birmingham Sheet and Hoop (B.G.)	United States Standard (Revised) U.S.S.G.	
						Thickness Approx.	Weight Oz/Sq Ft.
19	.0410	.040	.035890	.042	.0440	.0418	28
20	.0348	.036	.031961	.035	.0392	.0359	24
21	.03175	.032	.028462	.032	.0349	.0329	22
22	.0286	.028	.025346	.028	.03125	.0299	20
23	.0258	.024	.022572	.025	.02782	.0269	18
24	.0230	.022	.020101	.022	.02476	.0239	16
25	.0204	.020	.017900	.020	.02204	.0209	14
26	.0181	.018	.015941	.018	.01961	.0179	12
27	.0173	.0164	.014195	.016	.01745	.0164	11
28	.0162	.0148	.012641	.014	.015625	.0149	10
29	.0150	.0136	.011257	.013	.0139	.0135	9
30	.0140	.0124	.010025	.012	.0123	.0120	8
31	.0132	.0116	.008928	.010	.0110	.0105	7
32	.0128	.0108	.007950	.009	.0098	.0097	6.5
33	.0118	.0100	.007080	.008	.0087	.0090	6
34	.0104	.0092	.006305	.007	.0077	.0082	5.5
35	.0095	.0084	.005615	.005	.0069	.0075	5
36	.0090	.0076	.005000	.004	.0061	.0067	4.5
37	.0085	.0068	.004453	------	.0054	.0064	4.25
38	.0080	.0060	.003965	------	.0048	.0060	4
39	.0075	.0052	.003531	------	.0043	------	------
40	.0070	.0048	.003144	------	.0038	------	------

Table A-20. Melting Points Approximate

ELEMENTS	DEGREES	
	C	F
ALUMINUM	660	1220
ANTIMONY	631	1167
BARIUM	850	1562
BERYLIUM	1350	2462
BISMUTH	271	520
CADMIUM	321	610
CALCIUM	810	1490
CARBON	3500	6332
CHROMIUM	1765	3209
COBALT	1480	2696
COPPER	1083	1981
GOLD	1063	1945
IRON	1535	2795
LEAD	327	621
LITHIUM	186	367
MAGNESIUM	651	1204
MANGANESE	1260	2300
MERCURY	-39	-38
MOLYBDENUM	2620	4748

Table A-20. Melting Points Approximate - Continued

ELEMENTS	DEGREES	
	C	F
NICKEL	1446	2635
PHOSPHOROUS (YELLOW)	44	111
PLATINUM	1773	3223
SILICON	1420	2588
SILVER	961	1761
TIN	232	449
TUNGSTEN	3400	6152
VANADIUM	1710	3110
ZINC	420	787

GLOSSARY

A

ACID BRITTLENESS--Brittleness of steel resulting from use of acid solutions to remove scale, clean and electroplate. Brittleness is caused by the absorption of hydrogen into the metal from the acid solutions (also called hydrogen embrittlement).

AGING--(a) Generally any change in properties with time which occurs at relatively low temperature (room or elevated) after a final heat treatment of a cold marking operation. Aging is a process in which the trend is toward restoration of real equilibrium and away from an unstable condition induced by a prior operation. (b) Specifically the formation of a new phase by cooling a solid solution to super saturated state and allowing the super saturated solution to partially return to equilibrium by the formation of a less concentrated solid solution and a new phase.

AIR HARDENING--An alloy which does not require quenching from a high temperature to harden. Hardening of the material occurs simply by cooling in air from above critical temperature. The term refers only to the ability of the material to harden in air and does not imply any definite analysis or composition.

AIR COOLING/QUENCHING--Cooling from an elevated temperature in air, still or forced.

ALLOY--A mixture with metallic properties composed of two or more elements of which at least one is a metal. However, a metal is not designated an "alloy" based on elements incidental to its manufacture. For example; iron, carbon, manganese, silicon, phosphorus, sulphur, oxygen, nitrogen and hydrogen are incidental to the manufacture of plain carbon steel. It does not become an "alloy steel" until the elements are increased beyond regular composition or until other elements (metal) are added in significant amounts for a specific purpose.

ALLOY ELEMENTS--Chemical elements comprising an alloy, usually limited to the metallic elements added to modify the basic metal properties.

AMORPHOUS--Non-crystalline.

ANNEALING--Generally it is a controlled heating procedure which leads to maximum softness, ductility and formability. The annealing procedure is utilized for the following: (a) Remove stresses. (b) Induce softness. (c) After ductility, toughness, electrical, magnetic, or physical properties. (d) Refine crystalline structure. (e) Remove gases. (f) Produce a definite micro-structure.

ANNEALING FULL--A controlled heating procedure which leads to maximum softness, ductility and formability.

ANNEALING, ISOTHERMAL--Heating of a ferritic steel to a austenitic structure (fully or partial) followed by cooling to and holding at a temperature that causes transformation of the austenite to a relatively soft ferrite and carbide structure.

ANODIC OXIDE COATING--A thin film of aluminum oxide formed on the surface of aluminum and aluminum alloy parts by electro-chemical means.

AS CAST--Condition of a casting as it leaves the mold with no heat treatment.

AUSTENITE--A solid solution of iron carbide in gamma iron. It forms when the metal solidifies and remains a solution until it cools to about 732°C (1350°F). Theoretically the solution would remain if the iron or steel were cooled instantaneously from a bright red heat to atmospheric temperature, but in practice, this degree of rapidity is impracticable, and only a portion of the austenite is preserved by rapid cooling. Addition of certain alloying elements such as nickel and manganese perserves austenite below - 17°C (0°F).

GLOSSARY - Continued

B

BARK--The decarburized skin or layer just beneath the scale found after heating steel in an oxidizing atmosphere.

BASE METAL--The metal to which other elements are added to form an alloy possessing specific properties.

BESSEMER PROCESS--A process for making steel by blowing air through molten pig iron contained in a suitable vessel. The process is one of rapid oxidation primarily of silicon and carbon.

BILLET--An ingot or bloom that has been reduced through rolling or hammering to an approximate square ranging from 1 1/2 inches square to 6 inches square, or to an approximate rectangular cross-section of equivalent area. Billets are classified as semi-finished products for re-rolling or forging.

BINARY ALLOY--An alloy containing two elements, apart from minor impurities.

BLACK ANNEALING--A process of box annealing of sheets prior to tinning whereby a black color is imparted to the surface of the product.

BLUE ANNEALING--A process of annealing sheets after rolling. The sheets, if fairly heavy, are allowed to cool slowly after the hot rolling; if of lighter gage, as is usually the case, they are passed singly through an open furnace for heating to the proper annealing temperature. The sheets have a bluish-black appearance.

BLUE BRITTLENESS--Brittleness occurring in steel when in the temperature range of 149° to 371°C (300° to 700°F), or when cold after being worked within this temperature range.

BOX ANNEALING--Softening steel by heating it, usually at a sub-critical temperature, in a suitable closed metal box or pot to protect it from oxidation, employing a slow heating and cooling cycle; also called closed annealing or pot annealing.

BRIGHT ANNEALING--A process of annealing, usually with reducing gases, such that surface oxidation is reduced to a minimum, thereby yielding a relatively bright surface.

BRITTLENESS--Brittleness is the property of a material which permits little bending or deformation without fracture. Brittleness and hardness are closely associated.

BURNING--The heating of a metal to temperatures sufficiently close to the melting point to cause permanent injury. Such injury may be caused by the melting of the more fusible constituents, by the penetration of gases such as oxygen into the metal with consequent reactions, or perhaps by the segregation of elements already present in the metal.

BUTT-WELD--The welding of two abutting edges.

C

CARBON FREE--Metals and alloys which are practically free from carbon.

CARBURIZING (CEMENTATION)--Adding carbon to the surface of iron-base alloys by heating the metal below its melting point in contact with carbonaceous solids, liquids, or gases.

CASE--The surface layer of an iron-base alloy which has been made substantially harder than the interior by the process of case hardening.

CASE HARDENING--A heat treatment of a combination of heat treatments in which the surface layer of an iron-base alloy is made substantially harder than the interior by altering its composition by carburizing, cyaniding, or nitriding.

GLOSSARY - Continued

C (Cont)

CHAPMANIZING--A process for hardening steel by bubbling ammonia through a cyaniding salt bath and holding the finished part in the gas stream. This method produces a case almost as hard as nitriding at a time factor of slightly longer than required for cyaniding.

CHARPY IMPACT--An impact test made by measuring in a Charpy machine the energy required to fracture a standard notched specimen in bending. The values so obtained are merely comparative between different materials tested by the same method.

COLD DRAWING--The permanent deformation of metal below its recrystallization temperature, by drawing the bay through one or more dies.

COLD ROLLING--The permanent deformation of metal below its recrystallization temperature by rolling. This process is frequently applied in finishing rounds, sheets, strip, and tin plate.

COLD TREATING--Cooling to sub-zero temperature for various purposes, but primarily to promote transformation of austenite.

COLD WORKING--Plastic deformation of a metal at a temperature low enough to insure strain hardening.

CORE--The interior portion of an iron-base alloy which is substantially softer than the surface layer as the result of case hardening. Also, that portion of a forging removed by trepanning; the inner part of a rolled section of rimmed steel as distinct from the rimmed portion or rim; a body of sand or other material placed in a mold to produce a cavity in a casting.

CONVERSION COATING (CHEMICAL)--A film intentionally produced on a metal by subjection to a selected chemical solution for the purpose of providing improved corrosion resistance or to improve the adhesion of subsequently applied organic coating.

CYANIDING--Surface hardening by carbon and nitrogen absorption of an iron-base alloy article or portion of it by heating at a suitable temperature in contact with a cyanide salt, followed by quenching.

COOLING--Any decrease in temperature; however, specific term usually applies to reducing metal temperature in a gaseous environment rather than quenching in a liquid.

D

DECALESCENCE--When a piece of steel is heated, the temperature rises uniformly until it reaches a point between 718°C and 732°C (1,325°F and 1,350°F). At this point the rise in temperature suddenly halts due to the fact that the metal absorbs the heat necessary for the change of state. After this halt the temperature will continue its normal rate of increase. It is the halting in the temperature range that is termed decalescence. At the point of decalesence, the carbon and iron are forming a solid solution and the steel is passing from its annealed condition into its hardened condition.

DECARBURIZATION--The removal of carbon (usually refers to the surface of solid steel) by the (normally oxidizing) action of media which reacts with carbon. The decarburized area is sometimes referred to as the bark.

GLOSSARY - Continued

D (Cont)

DEFECTS IN METALS--Damage occurring to metal during manufacture/fabrication process. Some typical defects are as follows: (a) Blister - a defect in metal produced by gas bubbles either on the surface or formed beneath the surface. Very fine blisters are called pinhead or pepper blisters. (b) Blow hole - a hole produced during the solidification of metal by evolved gas which in falling to escape, is held in pockets. (c) Bursts -ruptures made in forging or rolling. (d) Fin (Flash) - a thin fin of metal formed at the side of a forging or weld where a small portion of the metal is forced out between the edges of the forging or welding case. (e) Flake -Internal fissures (cracks or clefts) in large steel forgings or large (MASS) rolled shapes. In a factured surface or test piece, they appear as sizable areas of silvery brightness and coarser grain size than their surroundings. Sometimes known as "chrome checks" and "hairline cracks." (f) Ghost - (Ferrite ghost) a faint band of ferrite. (g) Lap - a surface defect appearing as a seam caused from folding over hot metal, fins, or sharp corners and then rolling or forging, but not welding, them into the surface. (h) Pipe - a cavity formed in metal (especially ingots) during solidification of the last portion of liquid metal causes the cavity or pipe. (i) Scab - a rough projection on a casting caused by the mold breaking or being washed by the molten metal; or occuring where the skin from a blowhole has partly burned away and is not welded. (j) Seam - a crack on the surface of metal which has been closed but not welded; usually produced by blowholes which have become oxidized. If very fine, a seam may be called a hair crack or hair seam. (k) Segregation a mixture of compounds and elements, which, when cooled from the molten state, solidify at different temperatures. (l) Ductility the ability of a metal to withstand plastic deformation without rupture. Ductility is usually determined by tension test using a standard test (2″ gauge length) specimen. The test specimen is loaded in tension to rupture. The specimen is then assembled and measured for length and diameter at the fracture. The increase in length is expressed as per cent elongation and the decrease in diameter as per cent reduction of area. The above terms measure ductility and since they are comparative, considerable experience is required for proper evaluation of material for the purpose intended.

DUCTILITY--The property that permits permanent deformation before fracture by stress in tension.

E

ELASTIC LIMIT--The elastic limit of a material is the greatest load per unit area which will not produce a measurable permanent deformation after complete release of load.

ELONGATION--The amount of permanent extension at any stage in any process which continuously elongates a body.

EMBRITTLEMENT--Loss of ductility of a metal, which may result in premature failure. (see acid brittleness).

ENDURANCE LIMIT--The highest unit stress at which a material can be subjected to a very large number of repetitions of loading and still show no evidence of failure. Above this limit failure occurs by the generation and growth of cracks until fracture results in the remaining section.

ENDURANCE RATIO--The ratio of the endurance limit for cycles of reversed flexural stress to the tensile strength.

EQUALIZING--Intermediate heat treatment (special) which assists in developing desired properties, primary use is for equalizing/relieving stresses resulting from cold working.

EUTECTIC ALLOY--An alloy which has a lower melting point than neighboring compositions. More then one eutectic composition may occur in a given alloy system.

EXFOLIATION--The cracking or flaking off of the outer layer of an object.

EXPOSURE--Heating to or subjecting to an elevating temperature or environment for a certain period of time.

GLOSSARY - Continued

E (Cont)

ETCHING--Attack of metals structure by reagents. In metallography, the process of revealing structual details by the preferential attack of reagents on a metal surface. (a) Micro - etching is for the examination of the sample under a microscope and for this purpose the sample must be very carefully polished (by an experienced person) prior to etching. (b) Macro-etching is for the examination of the sample under a low power magnifying glass or by unaided eye. High polishing for this purpose is not absolutely essential; however, a good polish is necessary. (c) Deep-etching is a form of macro-etching in which the sample with regular cut surface may be immersed in hot hydrocloric acid (50% acqueous solution) and then examined for major defects such as inclusions, segregations, cracks; etc.

F

FATIGUE--The phenomenon of the progressive fracture of a metal by means of a crack which spreads under repeated cycles of stress.

FATIGUE LIMIT--Usually used as synonymous with endurance limit.

FERRITE--A solution in which alpha iron is the solvent, and which is characterized by a body centered cubic crystal structure.

FILLET--A concave junction of two surfaces usually perpendicular.

FLAME HARDENING--A process of hardening a ferrous alloy by heating it above the transformation range by means of a high-temperature flame and then cooling as required.

FORGING STRAINS--Elastic strains resulting from forging or from cooling from the temperature.

FORMING--To shape or fashion with hand/tools or by a shape or mold.

FRACTURE TESTING--A test used to determine type of structure, carbon content and the presence of internal defects. The test specimen is broken by any method that will produce a clean sharp fracture. The fracture is then examined by eye or with the aid of a low former magnifying glass. A trained/ experienced observer will determine grain size; approximate depth of carburized or decarburized surface area; the presence of inclusions of dirty steel; and defects such as seams, cracks, pipes bursts and flakes.

FULLY HARDENED--Applies generally to the maximum hardness obtainable. (In particular, applies to materials that are hardened by a strain and/or age hardening process).

FUSIBLE ALLOYS--A group of nonferrous alloys which melt at relatively low temperatures. They usually consist of bismuth, lead, tin, etc., in various proportions, and iron only as an impurity.

G

GALVANIC SERIES--A list of metals and alloys arranged in order of their relative potentials in a given environment. The galvanic series indicates the tendency of the serval metals and alloys to set up galvanic corrosion. The relative position within a group sometimes changes with external conditions, but it is only rarely that changes occur from group to group.

GRAINS--Individual crystals in metal. When metal is in molten state, the atoms have no uniform grouping. However, upon solidification they arrange themselves in a geometric pattern.

GRAIN GROWTH--An increase in the grain size of metal.

GLOSSARY - Continued

H

HARDENABILITY--The ability of an alloy to harden fully throughout the entire section thickness either by cold working or heat treatment. The maximum thickness at which this may be accomplished can be used as a measure of hardenability.

HARDENING--Hardening accomplished by heating the metal to a specified temperature, then rapidly cooling by quenching in oil, water, or brine. This treatment produces a fine grain structure, extreme hardness, maximum tensile strength, and minimum ductility.

HARDNESS--Hardness refers to the ability of a material to resist abrasion, penetration, indentation, or cutting action. The wearing qualities of a material are in part dependent upon its hardness. Hardness and strength are properties which are closely related for wrought alloys.

HARDNESS TESTING--Test used to determine the ability of a metal to resist penetration. The test results are usually directly related to tensile and yield strength of the metal involved. An exception would be case hardness. See Section VIII for typical testing methods.

HEAT TINTING--Heating a specimen with a suitable surface in air for the purpose of developing the structure by oxidizing or otherwise affecting the different constituents.

HEAT TREATMENT--An operation, or combination of operations, involving the heating and cooling of a metal or alloy in the solid state for the purpose of obtaining certain desirable conditions or properties. Heating and cooling for the sole purpose of mechanical working are excluded from the meaning of this definition.

HOMOGENIZING--Annealing or soaking at very high temperatures in order to reduce alloy segregation by diffusion.

HOT SHORTNESS--Brittleness in metal when hot. In iron when sulphur is in excess of the manganese necessary to combine with it to form manganese sulphide the excess sulphur combines with the iron to form iron sulphide. This constituent has a lower melting point than the iron and the result can be that steel may crack during hot working.

HYDROGEN EMBRITTLEMENT--See Acid Brittleness.

I

IMPACT TEST--A test in which one or more blows are suddenly applied to a specimen. The results are usually expressed in terms of energy absorbed or number of blows (of a given intensity) required to break the specimen. See Charpy Impact and Izod Impact.

INCLUSION--Particles of impurities, usually oxides, sulphides, silicates, and such which are mechanically held during solidification or which are formed by subsequent reaction of the solid metal.

INDUCTION HARDENING--A process of hardening a ferrous alloy by heating above the transformation range by means of electrical induction and then cooling as required.

M

MACHINABILITY--The cutting characteristic of metal and resulting surface finish using standard cutting tools and coolant/lubricants. There are various factors that effect the machinability of a metal such as hardness, grain size, alloy constituents, structure, inclusions; shape, type, condition of tool and coolant. The standard machinability ratings are usually based on comparison to SAE 1112/Aisi B 1112 Bessemer screw stock which is rated at 100% machinability.

GLOSSARY - Continued

M (Cont)

MAGNA FLUX TESTING--A method of inspection used to detect/locate defects such as cavities, cracks or seams in steel parts at or very close to the surface. The test is accomplished by magnetizing the part with equipment specially designed for the purpose and applying magnetic powder, wet or dry, Flaws are then indicated by the powder clinging to them (see Section VIII for additional data).

MALLEABILITY--Malleability is the property of a material which enables it to be hammered, rolled, or to be pressed into various shapes without fracture. Malleability refers to compression deformation as contrasted with ductility where the deformation is tensile.

MARTEMPERING--This is a method of hardening steel by quenching from the austenitizing temperature into a medium at a temperature in the upper part of or slightly above the martensite range and holding it in the medium until temperature is substantially uniform throughout the alloy is then allowed to cool in air through the martensite range.

MARTENSITE--It is the decomposition product which results from very rapid cooling of austenite. The lower the carbon content of the steel, the faster it must be cooled to obtain martensite.

MECHANICAL HARDNESS--See Hardness.

MECHANICAL PROPERTIES--Those properties that reveal the reaction, elastic and inelastic, of a material to an applied force, or that involve the relationship between stress and strain; for example, tensile strength, yield strength, and fatigue limit.

MECHANICAL TESTING--Testing methods by which mechanical properties are determined.

MECHANICAL WORKING--Subjecting metal to pressure exerted by rolls, presses, or hammers, to change its form, or to affect the structure and therefore the mechanical and physical properties.

MODULUS OF ELASTICITY--The ratio, within the limit of elasticity, of the stress in the corresponding strain. The stress in pounds per square inch is divided by the elongation in fractions of an inch for each inch of the original gage length of the specimen.

N

NITRIDING--Adding nitrogen to iron-base alloys by heating the metal in contact with ammonia gas or other suitable nitrogenous material. Nitriding is conducted at a temperature usually in the range 502°-538°C (935°-1000°F) and produces surface hardening of the metal without quenching.

NORMALIZING--Heating iron-base alloys to approximately 55°C (100°F) above the critical temperature range, followed by cooling to below that range in still air at ordinary temperatures. This process is used to remove stresses caused by machining, forging, bending, and welding.

O

OVERHEATING--Heating to such high temperatures that the grains have become coarse, thus impairing the properties of the metal.

P

PATENTING--Heating iron-base alloys above the critical temperature range followed by cooling below that range in air, or in molten lead, or a molten mixture of nitrate or nitrites maintained at a temperature usually between 427°-566°C (800-1050°F),depending on the carbon content of the steel and the properties required of the finished product. This treatment is applied to wire and to medium or high carbon steel as a treatment to precede further wire drawing.

GLOSSARY - Continued

P (Cont)

PHYSICAL PROPERTIES--Those properties exclusive of those described under mechanical properties; for example, density, electrical conductivity, coefficient of thermal expansion. This term has often been used to describe mechanical properties, but this usage is not recommended.

PHYSICAL TESTING--Testing methods by which physical properties are determined. This term is also inadvisedly used to mean the determination of the mechanical properties.

PICKLING--Removing scale from steel by immersion in a diluted acid bath.

PLASTIC DEFORMATION--The permanent change in size or shape of a material under stress.

POTENTIOMETER--Potentiometer 1s an instrument used to measure thermocouple voltage by balancing a known battery voltage against it.

PROCESS ANNEALING--Heating iron-base alloys to a temperature below or close to the lower limit of the critical temperature range, followed by coolings desired. This treatment is commonly applied to sheet and wire and the temperatures generally used are from 549° to 649°C (1020° to 1200°F).

PROOF STRESS--The proof stress of a material is that load per unit area which a material is capable of withstanding without resulting in a permanent deformation of more than a specified amount per unit of gage length after complete release of load.

PROPORTIONAL LIMIT--The proportional limit of a material is the load per unit area beyond which the increases in strain cease to be directly proportional to the increases in atress.

PYROMETER--An instrument for measuring temperature.

Q

QUENCHING--Rapid cooling by immersion in liquids or gases.

QUENCHING MEDIA--Quenching media are liquids or gases in which metals are cooled by immersion. Some of the more common are brine (10 percent sodium chloride solution), water 18°C (65°F), fish oil, paraffin base petroleum oil, machine oil, air, engine oil, and commercial quenching oil.

R

RECALESCENCE--When steel is slowly cooled from a point above the critical temperature, the cooling proceeds at a uniform rate until the piece reaches a point between 677° and 704°C (1,250° and 1,300°F). At this time, the cooling is noticeably arrested and the metal actually rises in temperature as the change of state again takes place. This change is the opposite of decalescence and is termed recalescence.

REDUCTION OF AREA--The difference between the original cross-sectional area and that of the smallest area at the point of rupture. It is usually stated as a percentage of the original area; also called "contraction of area."

REFINING TEMPERATURE OR HEAT--A temperature employed in case hardening to refine the case and core. The first quench is from a high temperature to refine the core and the second quench is from a lower temperature to further refine and harden the case.

S

SCALE--A coating of metallic oxide that forms on heated metal.

SENSITIZING--Developing a condition in stainless steels, which is susceptible to intergranular corrosion. The condition is usually formed by heating the steel above 800°F and cooling slowly, e.g., welding.

GLOSSARY - Continued

S (Cont)

SHEETS COLD ROLLED--The flat products resulting from cold rolling of sheets previously produced by hot rolling.

SHEETS HOT ROLLED--The flat-rolled products resulting from reducing sheet bars on a sheet mill, or slabs, blooms, and billets on a continuous strip-sheet mill.

SOAKING--Holding steel at an elevated temperature for the attainment of uniform temperature throughout the piece.

SOLIDIFICATION RANGE--The temperature range through which metal freezes or solidifies.

SPALLING--The cracking and flaking of small particles of metal from the surface.

SPHEROIDAL OR SPHEROIDIZED CEMETITE--The globular condition of iron carbide resulting from a spheroidizing treatment. The initial structure may be either pearlitic or martensitic.

SPHEROIDIZING--Any process of heating and cooling steel that produces a rounded or globular form of carbide. The spheroidizing methods generally used are: (a) Prolonged heating at a temperature just below the lower critical temperature, usually followed by relatively slow cooling. (b) In the case of small objects of high carbon steels, the spheroidizing result is achieved more rapidly by prolonged heating to temperatures alternately within and slightly below the critical temperature range. (c) Tool steel is generally spheroidized by heating to a temperature of 749°-804°C (1380°-1480°F) for carbon steels and higher for many alloy tool steels, holding at heat from 1 to 4 hours, and cooling slowly in the furnace.

STRAIN--The elongation per unit length.

STRESS--The internal load per unit area.

STRESS-RELIEF--This is annealing process which removes or reduces residual stresses retained after forming, heat treating, welding or machining. The anneal is accomplished at rather low temperatures for the primary purposes of reducing residual stresses, without material affecting other properties.

T

TEMPERING (ALSO TERMED DRAWING)--Reheating hardened steel to some temperature below the lower critical temperature, followed by any desired rate of cooling. Although the terms "tempering" and "drawing" are practically synonymous as used in commercial practice, the term "tempering" is preferred.

TENSILE STRENGTH--The tensile strength is the maximum load per unit area which a material is capable of withstanding before failure. It is computed from the maximum load carried during a tension test and the original cross-sectional area of the specimen.

TENSION--That force tending to increase the dimension of a body in the direction of the force.

THERMOCOUPLE--Thermocouple consists of a pair of wires of dissimilar metals connected at both ends. When the two junctions are subjected to different temperatures an electric potential is set up between them. This voltage is almost in direct proportion to the temperature difference, and hence, a voltage measuring instrument inserted in the circuit will measure temperature. The voltage measuring instrument is usually calibrated in °C or °F.

TOLERANCES--Slight deviations in dimensions or weight or both, allowable in the various products.

V

VISCOSITY--Viscosity is the resistance offered by a fluid to relative motion of its parts.

GLOSSARY - Continued

W

WIRE--The product obtained by drawing rods through a series of dies.

WORK HARDNESS--Hardness developed in metal resulting from mechanical working, particularly cold working.

Y

YIELD POINT--The load per unit of original cross section at which a marked increase in deformation occurs without increase in load.

YIELD STRENGTH--Stress arbitrarily defined as the stress at which the material has a specified permanent set (the value of 0.2% is widely accepted).

YOUNG'S MODULUS--See Modulus of Elasticity.