TECHNICAL MANUAL

CLEANING AND CORROSION PREVENTION AND CONTROL, AEROSPACE AND NON-AEROSPACE EQUIPMENT

F42620-00-D-0038

The publication supersedes TO 1-1-691, dated 1 May 2003, TO 1-1-691C, dated 1 November 2001 and TO 1-1-691E, dated 30 June 2002

DISTRIBUTION STATEMENT - Distribution Statement A - Approved for public release; distribution is unlimited. Other request for this document shall be referred to WR-ALC/LEET, Robins AFB, GA 31098. Questions concerning technical content shall be referred to WR-ALC/LESGI.

WARNING - This document contains technical data whose export is restricted by the Arms Export Control Act (Title 22, U.S.C., Sec 2751, et seq.) or the Export Administration Act of 1979, as amended, Title 50, U.S.C., App. 2401, et seq. Violations of these export laws are subject to severe criminal penalties. Disseminate in accordance with provisions of DoD Directive 5230.25.

Published Under Authority of the Secretary of the Air Force.

1 JULY 2003

LIST OF EFFECTIVE PAGES

INSERT LATEST CHANGED PAGES. DESTROY SUPERSEDED PAGES.

NOTE The portion of the text affected by the changes is indicated by a vertical line in the outer margin of the page. Changes to illustrations are indicated by shaded or screened areas, or by miniature pointing hands.

Dates of issue for original and changed pages are:

Original . . . . . 0 . . . . . 1 July 2003

TOTAL NUMBER OF PAGES IN THIS PUBLICATION IS 340 CONSISTING OF THE FOLLOWING:

Page No.	*Change No.	Page No.	*Change No.	Page No.	*Change No.
Title	0				
A	0				
i - vii	0				
viii Blank	0				
ix - xiii	0				
xiv Blank	0				
1-1 - 1-2	0				
2-1 - 2-22	0				
3-1 - 3-62	0				
4-1 - 4-18	0				
5-1 - 5-51	0				
5-52 Blank	0				
6-1 - 6-33	0				
6-34 Blank	0				
7-1 - 7-19	0				
7-20 Blank	0				
8-1 - 8-13	0				
8-14 Blank	0				
A-1 - A-46	0				
B-1 - B-42	0				
Glossary 1 - Glossary 4	0				
Index 1 - Index 8	0				

* Zero in this column indicates an original page.

TABLE OF CONTENTS

Chapter		Page
	LIST OF ILLUSTRATIONS	vi
	LIST OF TABLES	vii
	FOREWORD	ix
	SAFETY SUMMARY	xiii
1	INTRODUCTION	1-1
1.1	CORROSION CONTROL PROGRAM	1-1
1.1.1	Training	1-1
1.1.2	Maintenance	1-1
1.1.3	Facilities	1-1
1.2	SAFETY	1-1
1.2.1	Responsibility of Supervisors	1-1
1.2.2	Materials handling	1-1
1.3	MATERIALS	1-2
2	CORROSION THEORYYoungstown-Warren Reg. Apt.	2-1
2.1	Introduction to corrosion theory	2-1
2.2	DEFINITION OF CORROSION	2-1
2.3	CHEMICAL DEFINITIONS	2-1
2.3.1	Atom	2-1
2.3.2	Electron	2-1
2.3.3	Ions	2-1
2.3.4	Electrolyte	2-1
2.4	THEORY OF CORROSION	2-1
2.4.1	Anode	2-1
2.4.2	Cathode	2-1
2.4.3	Electrolyte	2-1
2.4.4	Electrical contact	2-1
2.5	DEVELOPMENT OF CORROSION	2-2
2.5.1	Corrosion Under Painted Surfaces	2-2
2.6	FACTORS INFLUENCE CORROSION	2-2
2.6.1	Type of Metal	2-3
2.6.2	Dissimilar Metal Coupling (Galvanic Corrosion)	2-3
2.6.3	Anode and Cathode Surface Area	2-4
2.6.4	Temperature	2-4
2.6.5	Heat Treatment and Grain Direction	2-4
2.6.6	Electrolytes	2-4
2.6.7	Oxygen	2-4
2.6.8	Electrolyte Concentration	2-5
2.6.9	Biological Organisms	2-5
2.6.10	Mechanical Stress	2-5
2.6.11	Time	2-5
2.7	TYPES OF CORROSION	2-5
2.7.1	Uniform Surface Corrosion	2-5
2.7.2	Galvanic Corrosion	2-5
2.7.3	Pitting Corrosion	2-6
2.7.4	Intergranular Corrosion	2-6
2.7.5	Exfoliation Corrosion	2-6
2.7.6	Crevice/Concentration Cell Corrosion	2-7
2.7.7	Corrosion Fatigue	2-11
2.7.8	Filiform Corrosion	2-11
2.7.9	Fretting Corrosion	2-12
2.7.10	High Temperature Oxidation (Hot Corrosion)	2-12
2.8	METALS AFFECTED BY CORROSION	2-12
2.8.1	Magnesium	2-12
2.8.2	Steel	2-13
2.8.3	Aluminum	2-13
2.8.4	Anodized Aluminum	2-17
2.8.5	Titanium	2-17
2.8.6	Copper and Copper Alloys	2-17
2.8.7	Cadmium	2-17
2.8.8	CRES/Stainless Steel	2-17
2.8.9	Nickel and Chromium	2-18
2.8.10	Silver, Platinum, and Gold	2-18
2.8.11	Graphite/Carbon Fiber Composites	2-18
2.9	CORROSIVE ENVIRONMENTS	2-19
2.9.1	Moisture	2-19
2.9.2	Temperature	2-19
2.9.3	Salt Atmospheres	2-19
2.9.4	Ozone	2-19
2.9.5	Other Industrial Pollutants	2-19
2.9.6	Sand, Dust, and Volcanic Ash	2-19
2.9.7	Solar Radiation	2-20
2.9.8	Climate	2-20
2.9.9	Factors of Influence in Tropical Environments	2-20
2.9.10	Manufacturing	2-20
2.9.11	Storage	2-21
2.9.12	Shipment	2-21
2.9.13	Industrial and Ship Emitted Air Pollutants	2-21
2.9.14	Animal Damage	2-21
2.9.15	Micro-Organisms	2-21
2.10	DEGRADATION OF NON-METALS	2-22
2.11	PREVENTIVE MAINTENANCE	2-22
3	PREVENTIVE MAINTENANCE	3-1
	SECTION I INTRODUCTION	3-1

TABLE OF CONTENTS - CONTINUED

Chapter		Page
3.1	PREVENTIVE MAINTENANCE PROGRAM	3-1
3.1.1	Preventive Maintenance	3-1
SECTION II	CLEANING	3-7
3.2	INTRODUCTION	3-7
3.2.1	Reasons for Cleaning	3-7
3.2.2	When to Accomplish Work	3-7
3.2.3	Aircraft Clear Water Rinse Requirements	3-8
3.2.4	Immediate Cleaning	3-8
3.3	CLEANING COMPOUNDS	3-9
3.3.1	Alkaline Cleaners	3-9
3.3.2	Solvent Emulsion and Aqueous Cleaners for Turbine Engine Gas Path and General Area Cleaning	3-10
3.3.3	Aqueous Parts Washer Cleaning Solutions	3-10
3.3.4	Solvents	3-11
3.3.5	Miscellaneous Cleaning Agents	3-11
3.3.6	Steam Cleaning	3-12
3.3.7	Dilution	3-12
3.4	CLEANING EQUIPMENT	3-29
3.4.1	High Pressure/Hot Water Wash Equipment	3-29
3.4.2	Portable, 15 Gallon, Foam Generating, Cleaning Unit	3-29
3.4.3	Portable, 45 Gallon, Foam Generating Cleaning Unit	3-30
3.4.4	Turbine Engine Compressor Cleaning Equipment	3-34
3.4.5	Miscellaneous Large Cleaning Equipment	3-34
3.4.6	Spray Cleaning Guns for Solvents	3-34
3.4.7	Pneumatic Vacuum Cleaner	3-34
3.4.8	Universal Wash Unit	3-34
3.4.9	Aqueous Parts Washers	3-34
3.4.10	Miscellaneous Equipment	3-36
3.5	CLEANING PROCEDURES	3-37
3.5.1	Warnings and Cautions	3-37
3.5.2	Cleaning Methods	3-40
3.5.3	Clear Water Rinsing of Aircraft	3-47
3.5.4	Post Cleaning Procedures	3-47
3.5.5	Treatment and Disposal of Wash Rack Waste	3-48
3.5.6	Fungus Growth Removal	3-48
3.5.7	Soil Barriers	3-49
SECTION III	LUBRICATION	3-50
3.6	INTRODUCTION	3-50
3.6.1	Conventional Lubricants	3-50
3.6.2	Solid Film Lubricants	3-50
3.6.3	Application of Conventional Lubricants	3-51
SECTION IV	PRESERVATION	3-53
3.7	INTRODUCTION	3-53
3.7.1	Operational Preservation	3-53
3.7.2	Non-Operational Preservation	3-53
3.7.3	Types of CPC's	3-53
3.7.4	Time Limitations of CPC's.	3-53
3.7.5	Description of CPC's	3-56
3.7.6	Preservation of Specific Areas	3-61
3.7.7	Preservation Application Methods	3-61
3.8	APPLICATION OF POLISH AND WAX	3-62
4	INSPECTION AND CORROSION PRONE AREAS	4-1
SECTION I	INSPECTION	4-1
4.1	Purpose	4-1
4.1.1	Responsibility	4-1
4.1.2	Frequency of Inspections	4-1
4.1.3	General Inspections	4-1
4.1.4	Detailed Inspections	4-1
4.2	INSPECTION METHODS	4-1
4.2.1	Visual inspection	4-1
4.2.2	Depth Gauge	4-2
4.2.3	Visual Inspection with a Borescope	4-4
4.2.4	Optical Depth Micrometers.	4-4
4.2.5	Fluorescent Penetrant Inspection	4-5
4.2.6	Eddy Current Inspection	4-6
4.2.7	Ultrasonic Inspection	4-6
4.2.8	Radiographic Inspection	4-6
4.3	EVALUATION OF CORROSION DAMAGE	4-8
4.4	DEGREES OF CORROSION	4-9
4.4.1	Light Corrosion	4-9
4.4.2	Moderate Corrosion	4-9
4.4.3	Severe Corrosion	4-9
SECTION II	CORROSION PRONE AREAS	4-9
4.5	COMMON AREAS	4-9
4.5.1	Fasteners	4-9
4.5.2	Faying Surfaces and Crevices	4-10
4.5.3	Spot-Welded Assemblies	4-10
4.5.4	Engine Exhaust and Gun Gas Impingement Areas	4-11
4.5.5	Wheel Wells and Landing Gear	4-11
4.5.6	Flap and Slat Recesses	4-11

TABLE OF CONTENTS - CONTINUED

Chapter		Page
4.5.7	Engine Frontal Areas and Air Inlet Ducts	4-12
4.5.8	Wing/Fin-Fold Joints and Wing and Control Surface Leading Edges	4-14
4.5.9	Hinges	4-14
4.5.10	Control Cables	4-14
4.5.11	Relief Tube Outlets	4-14
4.5.12	Water Entrapment Areas	4-14
4.5.13	Bilge Areas	4-14
4.5.14	Battery Compartments and Battery Vent Openings	4-14
4.5.15	Magnesium Parts	4-15
4.5.16	Electrical Connectors and Other Components	4-15
5	CORROSION REMOVAL AND SURFACE TREATMENT	5-1
	SECTION I CORROSION REMOVAL	5-1
5.1	PURPOSE	5-1
5.2	RESPONSIBILITY	5-1
5.3	CORRECTIVE ACTIONS	5-1
5.4	PAINT REMOVAL	5-1
5.5	CORROSION REMOVAL	5-1
5.5.1	Mechanical Methods	5-2
5.5.2	Non-Powered Tools and Materials	5-2
5.5.3	Power Tools and Materials	5-4
5.5.4	Abrasive Blasting	5-9
5.6	SURFACE FINISH	5-13
5.7	Pitting on Critical Structure	5-13
5.8	CORROSION REMOVAL PROCEDURES-MECHANICAL	5-13
5.8.1	Warnings and Cautions	5-13
5.8.2	Non-Powered Mechanical Corrosion Removal	5-16
5.8.3	Powered Mechanical Corrosion Removal	5-17
5.8.4	Abrasive Blasting Corrosion Removal	5-17
5.9	CORROSION REMOVAL-CHEMICAL	5-18
5.9.1	Aluminum Alloys	5-18
5.9.2	Magnesium Alloys	5-22
5.9.3	Ferrous Metal (Steel) Alloys Other Than Stainless Steels (Cres)	5-23
5.9.4	Stainless Steel (Cres) And Nickel Based Alloys	5-27
5.9.5	Copper And Copper Based Alloys	5-31
5.9.6	Titanium And Titanium Based Alloys	5-33
5.9.7	Plated And Phosphated Surfaces	5-35
	SECTION II SURFACE TREATMENT	5-37
5.10	PURPOSE	5-37
5.10.1	Chemical Prepaint Treatments	5-37
5.10.2	Surface Preparation	5-39
5.10.3	Precautions	5-40
5.10.4	Application of Surface Treatments	5-40
5.10.5	Notes on Conversion Coating/Surface Treatment	5-41
5.10.6	Post Treatment	5-42
5.10.7	Temporary Preservation	5-42
	SECTION III SHOT PEENING/ROTO-PEENING	5-44
5.11	PEENING OF METAL SURFACES	5-44
5.11.1	Types of Peening	5-44
5.11.2	Roto-Peening (Rotary Flap Peening) Procedures	5-45
6	SEALANTS	6-1
6.1	PURPOSE	6-1
6.2	APPLICATIONS	6-1
6.3	SEALING COMPOUNDS	6-1
6.3.1	Sealant Packaging	6-1
6.3.2	Polysulfide, Polyurethane, and Polythioether Sealing Compounds	6-1
6.3.3	Silicone Sealing Compounds	6-2
6.3.4	Adhesion Promoters	6-11
6.3.5	SAE AMS 3255 Oil and Water Resistant, Expanded Polytetrafluoroethylene Sealing Tape (EPTFE) (Skyflex	6-11
6.3.6	Av-Dec® Polyurethane Sealant Tapes and Two Component Sealants	6-11
6.4	EQUIPMENT	6-11
6.4.1	Sealant Gun	6-11
6.4.2	Application Nozzles	6-11
6.4.3	Injection Gun	6-11
6.4.4	Sealant Kits (Semkits®)	6-17
6.4.5	Sealant Removal and Application Tools	6-17
6.5	SEALANT MIXING	6-18
6.5.1	Application Life	6-19
6.5.2	Storage Instructions	6-22
6.5.3	Mixing MIL-PRF-81733, Type III Spray-able Sealant Coating	6-22
6.6	SEALANT APPLICATION PROCEDURES	6-22
6.6.1	Cleaning	6-23
6.6.2	Masking	6-23
6.6.3	Adhesion Promoters	6-23

TABLE OF CONTENTS - CONTINUED

Chapter		Page
6.6.4	Brush Spatula or Caulking Gun Application	6-23
6.6.5	Spray Gun Application	6-24
6.6.6	Peel and Stick Application; AMS 3255 EPTFE Skyflex® and Av-Dec® HT3935-7 and HT3000 Sealing Tapes	6-24
6.7	SEALING OF SPECIFIC AREAS	6-25
6.7.1	Faying Surface Sealing	6-25
6.7.2	Fillet Sealing	6-26
6.7.3	Injection Sealing	6-26
6.7.4	Fastener Sealing	6-26
6.7.5	Integral Fuel Cells/Tanks and Removable Fuel Tanks	6-27
6.7.6	Form-In-Place (FIP) Gasket Sealant Repair	6-27
6.7.7	SAE AMS 3255 EPTFE (Skyflex®) and Av-Dec® TF3000 and TF3935-7 Sealing Tape Gasket Repair	6-27
6.7.8	External Aircraft Structure	6-29
6.7.9	Depressions	6-29
6.7.10	Damaged Sealant	6-29
6.7.11	Extensive Repair	6-30
6.7.12	High Temperature Areas	6-30
6.7.13	Low Temperature Curing	6-30
6.8	STORAGE/SHELF LIFE CONTROL OF SEALANTS	6-30
7	TREATMENT OF SPECIFIC AREAS	7-1
7.1	INTRODUCTION	7-1
7.2	BATTERY COMPARTMENTS, BOXES, AND ADJACENT AREAS	7-1
7.2.1	Preparation of Solutions for Cleaning and Neutralizing Battery Electrolytes	7-1
7.2.2	Cleaning and Neutralizing Procedures	7-2
7.2.3	Paint Systems	7-2
7.3	RELIEF TUBE AREAS	7-2
7.4	CORROSION TREATMENT FOR STEEL CABLES	7-3
7.5	PIANO TYPE HINGES	7-3
7.6	INTEGRAL AND EXTERNAL FUEL TANKS AND DROP TANKS	7-3
7.6.1	Corrosion Removal and Rework of Pitted Areas of Integral Fuel Tanks	7-3
7.6.2	Removal of Corrosion and Rework of Aluminum External Fuel Tanks/Drop Tanks	7-4
7.7	FAYING SURFACES AND ATTACHMENT POINTS	7-5
7.7.1	Faying Surfaces, Joints, and Seams	7-5
7.7.2	Attaching Parts and Hardware	7-5
7.7.3	Severely Corroded (Rusted) Hardware	7-6
7.8	NATURAL AND SYNTHETIC RUBBER PARTS	7-7
7.9	POTABLE WATER TANKS	7-7
7.10	SURFACES AND COMPONENTS EXPOSED TO EXHAUST GASES, GUN GASES AND ROCKET BLAST	7-7
7.11	ELECTRICAL AND ELECTRONIC EQUIPMENT	7-7
7.11.1	Grounding and Bonding Connections	7-7
7.11.2	Conduit and Junction Boxes	7-7
7.11.3	Wires and Cables	7-7
7.11.4	Corrosion Protection for Electrical Connectors, Lead-ins, etc	7-7
7.11.5	Moisture and Fungus Proofing of Electrical and Electronic Equipment	7-7
7.11.6	Antennas	7-7
7.12	STRUCTURAL TUBING MEMBERS AND ASSEMBLIES	7-7
7.12.1	Structural Aluminum Alloy Tubing	7-7
7.12.2	Structural Magnesium Alloy Tubing	7-8
7.12.3	Structural Copper Alloys, Stainless Steel (CRES) Alloys, and Heat Resistant Alloy Tubing	7-8
7.12.4	Structural Carbon Steel Tubing	7-8
7.13	NON-STRUCTURAL TUBING MEMBERS AND ASSEMBLIES	7-8
7.13.1	Aluminum Alloy Tubing	7-8
7.13.2	Stainless Steel (CRES) Tubing	7-9
7.13.3	Cadmium Plated Steel Tubing	7-9
7.13.4	Special Instructions for Tubing Fittings and Sleeves	7-10
7.13.5	Removable Installations	7-10
7.14	CORROSION REMOVAL FROM THIN METAL (0.0625 INCH THICKNESS AND LESS)	7-10
7.15	AIR INTAKE DUCTS FOR JET AIRCRAFT	7-11
7.16	CLOSELY COILED SPRINGS	7-11
7.17	CORROSION PREVENTION ON ASSEMBLIES AND PARTS REMOVED FROM AIRCRAFT DURING MAINTENANCE, 30 DAY SHORT TERM STORAGE, AND OVER 30 DAY LONG TERM STORAGE REQUIREMENTS	7-11
7.17.1	Short Term Storage	7-11
7.17.2	Long Term Storage	7-11

TABLE OF CONTENTS - CONTINUED

Chapter		Page
7.18	DEPLETED URANIUM COUNTER-WEIGHTS	7-12
7.18.1	Corrosion and Finish Damage Treatment Procedures	7-12
7.19	MONEL RIVETS	7-13
7.20	BERYLLIUM-COPPER ALLOYS, BERYLLIUM-ALUMINUM ALLOYS, AND BERYLLIUM OXIDE	7-13
7.20.1	Corrosion Removal and Treatment	7-13
7.20.2	Depot Maintenance	7-14
7.21	EMI SEALS AND GASKETS	7-14
7.21.1	Treatment of EMI Seals and Gaskets	7-14
8	EMERGENCY PROCEDURES	8-1
8.1	PURPOSE	8-1
8.2	RESPONSIBILITY	8-1
8.3	EMERGENCY PREPARATIONS	8-1
8.3.1	Priority Removal List of Equipment and/or Components	8-1
8.3.2	Emergency Reclamation Team	8-2
8.3.3	Emergency Reclamation Equipment	8-2
8.3.4	Production Planning	8-2
8.4	GENERAL PROCEDURES	8-2
8.4.1	Removal of Contaminated Installed Equipment	8-5
8.4.2	Disassembly/Removal of Components	8-5
8.4.3	Clean	8-5
8.4.4	Tagging	8-5
8.5	GENERAL CLEANING PROCEDURES	8-5
8.5.1	Primary Method	8-5
8.5.2	Alternate Methods	8-6
8.5.3	Removing O-D-1407 Potassium Bicarbonate (Purple K Powder/PKP) or Other Dry Chemical Fire Extinguishing Agents	8-6
8.5.4	Removing MIL-F-24385 Aqueous Film Forming Foam (AFFF) Fire Extinguishing Agent	8-7
8.5.5	Removal of Carbon Dioxide (CO_2), HFC-125, or Halon Fire Extinguishing Agents	8-7
8.5.6	Removal of Protein Type Foam and Soda-Acid Fire Extinguishing Agents	8-7
8.5.7	Treatment After Landing on a Foamed Runway	8-8
8.5.8	Treatment After Exposure to Volcanic Ash	8-8
8.6	SPECIFIC INTERNAL AREAS	8-8
8.6.1	Aircraft Cockpit Area	8-8
8.6.2	Aircraft Ejection Seats	8-8
8.6.3	Avionic, Electronic and Electrical Equipment	8-9
8.6.4	Photographic Equipment	8-9
8.6.5	Graphite or Carbon Fiber/Epoxy, Boron Fiber/Epoxy, and Tungsten Fiber/Epoxy Composite Materials	8-9
8.7	SPECIFIC EXTERNAL AREAS OF AIRCRAFT	8-10
8.7.1	Airframes	8-10
8.7.2	Antennas	8-10
8.7.3	Reciprocating Engines	8-10
8.7.4	Turbine Engines	8-11
8.7.5	Treatment for Engines Which Have Ingested Fire Extinguishing Powder (Purple K/PKP or Sodium Bicarbonate)	8-11
8.7.6	Helicopter Transmission, Rotor Head, and Rotor Hub	8-11
8.7.7	Helicopter Main and Tail Rotor Blades	8-12
8.7.8	Armament	8-12
8.7.9	Aircraft Fuel Systems	8-13
APPENDIX A	CONSUMABLE MATERIALS	A-1
APPENDIX B	EQUIPMENT FOR CLEANING AND CORROSION PREVENTION AND CONTROL	B-1
GLOSSARY		Glossary-1
INDEX		Index-1

LIST OF ILLUSTRATIONS

Figure	Title	Page
2-1	Simplified Corrosion Cell	2-1
2-2	Elimination of Corrosion by Application of an Organic Film to a Metal Surface	2-2
2-3	Effect of Sea Water on Galvanic Corrosion	2-3
2-4	Galvanic Corrosion in a Flashlight Battery	2-4
2-5	Effect of Area Relationship in Dissimilar Metal Contacts	2-4
2-6	Galvanic Corrosion of Magnesium Adjacent to a Steel Fastener	2-5
2-7	Pitting of an Aluminum Wing Assembly	2-6
2-8	Cross-section of Corrosion Pits	2-6
2-9	Cross-section of 7075-T6 Aluminum Alloy	2-7
2-10	Grain Structure of a Corroding Aluminum Surface	2-7
2-11	Intergranular Corrosion of 7075-T6 Aluminum Adjacent to Steel Fastener	2-7
2-12	Example of Exfoliation	2-7
2-13	Another Example of Exfoliation	2-8
2-14	Concentration Cell Corrosion	2-9
2-15	Stress Corrosion Cracking	2-9
2-16	Galvanic Series of Metals and Alloys in Sea Water	2-10
2-17	Filiform Corrosion Found Under Paint Coating on a Magnesium Panel	2-11
2-18	Schematic of the Development of Filiform Corrosion on an Aluminum Alloy	2-12
2-19	Magnesium Corrosion Products	2-13
2-20	Steel Corrosion Products (Rust)	2-14
2-21	Aluminum Surface Corrosion Products	2-15
2-22	Cadmium Plated Surface Conditions	2-16
2-23	Failed Chromium Plating	2-18
3-1	Foam Generating Cleaning Unit (15 Gallons)	3-31
3-2	Foam Generating Cleaning Unit (45 Gallons)	3-32
3-3	Universal Wash Unit	3-33
3-4	Top Loading Type	3-36
3-5	Front Loading Type	3-37
3-6	Use of Aircraft Washing Applicator	3-41
3-7	Aircraft Cleaning Procedure	3-42
3-8	Automatic Water Spray Nozzle	3-45
4-1	Depth Dimension of Corrosion Pits	4-3
4-2	Fiber Optic Borescope	4-4
4-3	Optical Depth Micrometer (Analog Mechanical Read Out Type)	4-7
4-4	Optical Depth Micrometer (Digital Read Out Type)	4-8
4-5	Typical Use of a Straight Edge to Determine if Suspect Areas Have Been Previously Reworked	4-9
4-6	Corrosion Around Fasteners	4-10
4-7	Galvanic Corrosion of Aluminum Adjacent to Steel Fasteners	4-10
4-8	Spot Weld Corrosion	4-11
4-9	Spot Welded Skin Corrosion Mechanism	4-11
4-10	Gun Blast Area Corrosion Points	4-12
4-11	Exhaust Trail Area Corrosion Points	4-12
4-12	F-15 Nose Landing Gear Wheel Well	4-12
4-13	Flaps Lowered to Expose Recess Areas	4-13
4-14	Reciprocating Engine Frontal Area Corrosion Points	4-13
4-15	Jet Engine Frontal Area Corrosion Points	4-13
4-16	Corrosion Prone Point of Air Inlet	4-13
4-17	Corrosion in Air Intake Duct	4-14
4-18	Wing Fold Joint	4-15
4-19	Hinge Corrosion Points	4-16
4-20	Piano Hinge Lugs	4-16
4-21	Control Cables	4-16
4-22	Personnel Relief Tube Vent	4-16
4-23	Common Water Entrapment Areas	4-17
4-24	Bilge Areas	4-17
4-25	Battery Compartment	4-18
5-1	3M Co. Scotch-Brite™ Flap Brush and Mandrel	5-5
5-2	Abrasive Flap Wheels with Spindle Mount	5-5
5-3	3M Co. Radial Bristle Disc	5-6
5-4	3M Co. Roloc Discs	5-6
5-5	3M Co. Inline Bristle Disc	5-8
5-6	Abrasive Blasting Equipment	5-10
5-7	Shaping Reworked Areas	5-15
5-8	Acceptable Clean-up of Pitting Corrosion on Critical Structure	5-15
5-9	Limited Clearance	5-16
5-10	A Water-Break Free Surface Compared with One with Breaks	5-41
5-11	Peening Intensity Conversion Graph (I_{sp} to I_{rp})	5-48
5-12	Saturation Coverage Curves for MIL-W-81840, Type I Wheels	5-49
5-13	Saturation Coverage Curves for MIL-W-81840, Type II Wheels (Flaps)	5-50
5-14	Flap Deflection Ranges	5-51
6-1	Pneumatic Sealant Gun	6-12
6-2	Sealant Application Nozzles	6-13
6-3	Countersink Application Nozzles	6-14

LIST OF ILLUSTRATIONS - CONTINUED

Figure	Title	Page
6-4	Rivet Application Nozzles	6-15
6-5	Sealant and Adhesive Smoothing Tools	6-16
6-6	Sealant Injection Guns	6-17
6-7	Injection Style Semkit®	6-18
6-8	Non-metallic Spatula	6-24
6-9	Faying Surface Sealing	6-26
6-10	Typical Fillet Seal	6-27
6-11	Typical Injection Seal	6-28
6-12	Typical Methods of Sealing Fasteners	6-28
6-13	Typical Lap Skin Sealing	6-30
6-14	Sealing Procedures for Typical Aircraft Fitting	6-31
6-15	Typical Spar Cap Sealing	6-32
6-16	Sealing of Access Doors	6-33
7-1	Beryllium-Copper Spiral Contact With Environmental Fluorosilicone Seal	7-15
7-2	Dorsal Longeron EMI Seal	7-16
7-3	Stainless Steel (CRES) EMI Screen	7-17
7-4	Bonding Cable From Airframe To Graphite/Epoxy Avionics Bay Door	7-18
7-5	EMI Bonding Washers in an Avionics Bay	7-19
B-1	Back Mounted Full Facepiece Respirator	B-40
B-2	Front Mounted Full Facepiece Respirator	B-41
B-3	Hooded Air Respirator System	B-42

LIST OF TABLES

Table	Title	Page
2-1	Corrosion of Metals - Type of Attack and Appearance of Corrosion Products	2-16
3-1	Aircraft Wash Intervals	3-2
3-2	Cleaning of Specific Areas and Components	3-12
3-3	Recommended Dilution of Low Temperature Cleaner	3-46
3-4	Common Military Greases the Their Uses	3-52
3-5	Time Limitations for CPC's	3-54
3-6	Corrosion Preventive Compounds	3-54
3-7	Preservation of Specific Areas and Components	3-57
4-1	NDI Inspection Tools for Various Types of Corrosion	4-2
5-1	Grades of Abrasive Mats	5-2
5-2	Grades of Steel Wool	5-2
5-3	Recommended Powered Abrasives for Corrosion Removal	5-11
5-4	Recommended Non-Powered Abrasives for Corrosion Removal	5-12
5-5	Typical Chemical Corrosion Removal Procedures For Aluminum Alloy Parts and Assemblies	5-20
5-6	Typical Chemical Corrosion Removal Procedures for Magnesium Alloys	5-23
5-7	Typical Chemical Corrosion Removal Procedures for Ferrous Metals Other Than Stainless Steel (CRES)	5-27
5-8	Typical Chemical Corrosion Removal Procedures for Stainless Steel (CRES) and Nickel Based Alloys	5-29
5-9	Control of Corrosion Removal/ Pickling Action of Nitric-Hydrofluoric Acid Solutions	5-31
5-10	Typical Chemical Corrosion Removal Procedures for Copper and Copper Alloys	5-33
5-11	Typical Chemical Corrosion Removal of Titanium and Titanium Base Alloys	5-34
5-12	Typical Chemical Corrosion Removal Procedures for Plated and Phosphated Surfaces	5-37
5-13	Prepaint Treatments for Metal Surfaces	5-42
5-14	Tool Operation Speed Requirements	5-46
5-15	Standard Peening Intensity (I_{sp}) for Complete Coverage Arc-Height in Inches	5-46
6-1	Sealing Compounds	6-3
6-2	Time Requirements for Sealants When Used At 75 Degree F (24 Degree C) and 50 Precent RH	6-19
8-1	Priority Guide for Emergency Treatment of Aircraft, Missiles, & Equipment	8-2
8-2	Suggested List of Emergency Reclamation Items	8-3
A-1	Units of Issue Codes	A-1
A-2	Consumable Materials	A-2
B-1	Unit Of Issue Codes	B-1
B-2	Equipment For Cleaning and Corrosion Prevention and Control	B-2

FOREWORD

1 PURPOSE.

The purpose of this manual is to provide information on materials and procedures for the prevention and repair of corrosion damage to air craft and missile weapon systems and related equipment. Supervisory and maintenance personnel shall use this manual as a guide for all corrosion control and maintenance efforts. Contractors who maintain and repair corrosion of aircraft, missiles, and related equipment shall also use this manual.

1.1 Usage. Use this manual in conjunction with and in support of the appropriate systems peculiar aircraft, missile, or equipment technical orders (TO's). In the case of a conflict between this manual and a systems peculiar aircraft, missile, or equipment manual, the system peculiar manual shall take precedence over this manual. Paragraph 5 lists related technical publications used by personnel involved in cleaning and corrosion control.

2 SCOPE.

The material in this manual provides basic cleaning, corrosion prevention and control, and corrective maintenance information to be used at organizational, intermediate, and depot levels. This manual is divided into a foreword, safety summary, eight chapters, two appendices, a glossary, and an alphabetical index.

2.1 Foreword. This Foreword explains the purpose, responsibility for changing this manual, and presents the scope and outlay of the manual.

2.2 Safety Summary. This Safety Summary provides general safety precautions personnel shall use during all phases of operations and maintenance.

2.3 Chapter 1, Introduction. This chapter explains the appropriate usage of this manual.

2.4 Chapter 2, Corrosion Theory. This chapter explains what corrosion is, why it occurs, the various forms it can take, and how to recognize it.

2.5 Chapter 3, Preventive Maintenance. This chapter outlines accepted procedures, methods, and materials to be used in maintenance cleaning in Section I, lubrication in Section II, and preservation in Section III of aircraft, missiles, and related equipment.

2.6 Chapter 4, Inspection and Corrosion Prone Areas. This chapter describes inspection techniques for detecting corrosion in Section I and discusses corrosion prone areas in Section II.

2.7 Chapter 5, Corrosion Removal and Surface Treatment. This chapter outlines the approved methods for the removal of corrosion damage in Section I and the application of surface treatments in Section II.

2.8 Chapter 6, Sealants. This chapter covers recommended materials and procedures for the application of sealing compounds to aircraft, missile, and related equipment structures.

2.9 Chapter 7, Treatment of Specific Areas. This chapter describes the recommended procedures for treating and protecting against corrosion in specific areas.

2.10 Chapter 8, Emergency Procedures. This chapter outlines emergency procedures to be followed after exposure of aircraft to salt water, fire extinguishing chemicals, etc.

2.11 Appendix A, Consumable Materials. This appendix lists the recommended materials for cleaning, corrosion prevention, surface treatment, and preservation of aircraft, missiles, and related equipment.

2.12 Appendix B, Equipment for Cleaning and Corrosion Prevention and Control. This appendix lists equipment used for cleaning, corrosion removal, conversion coating, and sealing of aircraft, as well as associated safety equipment including personal protective equipment (PPE) for these operations.

2.13 Glossary. The glossary defines terms commonly used by personnel performing aircraft, missile, and equipment cleaning and corrosion prevention and control.

2.14 Alphabetical Index. This index locates specific subjects in the manual.

3 ABBREVIATIONS AND ACRONYMS.

This manual contains standard and non-standard abbreviations. The standard abbreviations are in accordance with ASME Y14.38.

AFCPCO	Air Force Corrosion Prevention and Control Office
AFFF	Aqueous Film Forming Foam
AISI	American Iron and Steel Institute
BOD	Biological Oxygen Demand
CaCO3	Calcium Carbonate
CBR	Chemical, Biological, Radiological
CFM	Cubic Feet per Minute
CPC	Corrosion Preventive Compounds
CRES	Corrosion Resistant Steels
CWR	Clear Water Rinse
°C	Degrees Celsius
°F	Degrees Fahrenheit
DI	Deionized
DTIC	Defense Technical Information Center
EA	Each
EPA	Environmental Protection Agency
EPTFE	Expanded Polytetrafluoroethylene
ft	Foot/Feet
FIP	Form-In-Place
HAP	Hazardous Air Pollutants
IAW	In Accordance With
ID	Inside Diameter
in	Inch
KSI	Kilograms per Square Inch
LG	Landing Gear
LOX	Liquid Oxygen
MEK	Methyl Ethyl Ketone
mg/L	Milligrams per Liter
mm Hg	Millimeters of Mercury
MOS	Maximum Operating Speed
MSDS	Material Safety Data Sheet
NDI	Non-Destructive Inspection
NRA	Nuclear Regulatory Agency
NSN	National Stock Number
OD	Outside Diameter
ODC	Ozone Depleting Compounds
ODS	Ozone Depleting Substances
%	Percent
pH	Potential of Hydrogen
PMF	Pre-Mixed and Frozen
PPE	Personal Protective Equipment
ppm	Parts Per Million
QPL	Qualified Products List
RH	Relative Humidity
RTU	Ready To Use
SE	Support Equipment
SPD	System Program Director
SPM	System Program Manager
TDS	Total Dissolved Solids
TNP	Touch-N-Prep™
TPH	Total Petroleum Hydrocarbon
TSS	Total Suspended Solids

4 RESPONSIBILITY FOR CHANGES TO THIS MANUAL.

This manual is maintained for technical content by the Air Force Corrosion Prevention and Control Office (AFCPCO), AFRL/MLS-OLR, 325 Richard Ray Blvd., Robins AFB GA 31098-1639, Tel: (478) 926-3284 (DSN 468-3284), Fax: (478) 926-6619 (DSN 468-6619), email: afcorr@ robins.af.mil; and for TO administration by WR-ALC/LESGI, 460 Richard Ray Blvd., Robins AFB GA 31098-1640, Tel:(478) 926-7046 x122 (DSN 468-7046 x122), email: wralc.lesgi.industrialbackhop@ robins.af.mil.

4.1 Recommended Changes, Corrections, or Deletions. All activities using this manual are invited to submit recommended modifications, additions, or deletions. Use the current reporting system in TO 00-5-1 to submit these changes to WR-ALC/LESGI.

5 RELATED PUBLICATIONS.

List of Related Publications

Number	Title
DOD 6050.5LR	Hazardous Material Control and Management (HMC&M)
AFI 32-1067	Water Systems
AFI 32-7080	Pollution Prevention Program
AFI 40-201	Managing Radioactive Materials in the U.S. Air Force
AFM 23-110, Vol.7,Pt.3	Inspection and Control of USAF Shelf Life Equipment

List of Related Publications - Continued

Number	Title
AFM 88-11	Sanitary and Industrial Waste Water Collection
AFM 91-11	Solid Waste Management
AFOSH STD 91-66	General Industrial Operations
AFP 85-14	Commanders Facility Improvement Guide
MIL-HDBK-729	Corrosion and Corrosion Prevention-Metals
TO 00-5-1	AF Technical Order System
TO 00-20-1	Aerospace Equipment Maintenance, General Policies and Procedures
TO 00-20-2	Maintenance Data Documentation
TO 00-25-107	Maintenance Assistance
TO 00-25-172	Ground Servicing of Aircraft and Static Grounding/Bonding
TO 00-25-234	General Shop Practice Requirements for the Repair, Maintenance, and Test of Electronic Equipment
TO 00-25-235	Safety Procedures and Equipment For Confined Space Entry (Including Missile Propellant Tanks)
TO 00-35D-54	USAF Material Deficiency Reporting and Investigating System
TO 00-85-3	Corrosion Control for Packaging
TO 00-85A-03-1	Preservation, Packaging and Packing - External Aircraft Fuel Tanks, Fuel Cells
TO 00-110A-1	Guidelines for Identification and Handling of Aircraft and Material Contaminated with Radioactive Debris (Fallout)
TO 1-1-3	Preparation, Inspection, and Repair of Aircraft Fuel, Oil, and Water-Alcohol Cells and Integral Tanks
TO 1-1-8	Application and Removal of Organic Coatings, Aerospace and Non-Aerospace Equipment

List of Related Publications - Continued

Number	Title
TO 1-1-17	Storage of Aircraft and Missiles Systems
TO 1-1-24	Maintenance Repair and Electrical Requirements for Fiberglass Airborne Radomes
TO 1-1-689	Avionics Cleaning and Corrosion Prevention/Control
TO 1-1-690	General Advanced Composite Repair Processes
TO 1-1A-1	Engineering H/B Series for Aircraft Repair - General Manual for Structural Repair
TO 1-1A-8	Engineering Manual Series for Aircraft and Missiles Repair Structural Hardware
TO 1-1A-9	Engineering Series for Aircraft Repair Aerospace Metal General Data and Usage Factors
TO 1-1A-12	Fabrication, Maintenance and Repair of Transparent Plastic
TO 1-1A-14	Installation Practices for Aircraft Electric and Electronic Wiring
TO 1-1A-15	General Maintenance Instructions for Support Equipment (SE)
TO 2-1-11	Corrosion Control of Engine Parts During Overhaul and Field Level Maintenance, Reciprocating, Turbojet, and Gas Turbine Aircraft Engines
TO 2-1-111	Standard Maintenance Practices, Navy, USAF and Army, P&W Aircraft Engines
TO 2J-1-13	Cleaning of Gas Turbine Aircraft Engines and Parts
TO 2J-1-18	Preparation for Shipment and Storage of Gas Turbine Engines

List of Related Publications - Continued

Number	Title
TO 2J-1-32	Standard Maintenance Practice Instructions - GE Aircraft Engines, Model TF-34-GE-100, A, -400, A, B, TF58-GE-3, -5, -8B, -10, -16, -100 (USCG), -4OOB, -402, T64-GE-6B, -7, A, 100, -413, -415, -416, -416A, F404-GE-400, YF404-GE-400, F110-GE-400, YT700-GE-401, T700-GE-401,4
TO 2R-1-11	Corrosion Control - Reciprocating Aircraft Engines
TO 2R-1-84	Cleaning of Reciprocating Engines and Parts
TO 4B-1-32	Maintenance and O/H Instructions - All Type Aircraft Brakes
TO 4S-1-182	General O/H & Maintenance Instr. All FSC 1620 Landing Gear & Components
TO 4W-1-61	Operation, Service, and Maintenance Instructions — All Aircraft Wheels
TO 10-1-179	Corrosion Control Manual for Photographic Equipment
TO 13A1-1-1	Repair, Cleaning, Inspection and Testing Aircraft Safety Belts, Shoulder Harness, and Miscellaneous Personnel Restraint Equipment.
TO 31-1-221	Field Instructions for Painting and Preserving Electronics Command Equipment
TO 33B-1-1	Nondestructive Inspection Methods

List of Related Publications - Continued

Number	Title
TO 34-1-3	Inspection and Maintenance of Machinery and Shop Equipment
TO 35-1-3	Corrosion Prevention, Painting, and Marking of USAF Support Equipment (SE)
TO 35-1-4	Processing and Inspection of Support Equipment for Storage and Shipment
TO 35-1-12	Compounds and Procedures for Cleaning Aerospace Ground Equipment
TO 36-1-191	Technical and Managerial Reference for Motor Vehicle Maintenance
TO 42A1-1-1	Evaluation and Service Testing of Materials - Cleaning, Painting, Sealing, Protective Treating, Anti-Corrosion, Inspection Materials, and Related Items
TO 42A3-1-2	General Use of Cements, Sealants, and Coatings
TO 42B-1-6	Corrosion Preventive Lubricants and Anti-Seize Compounds
TO 42C-1-2	Anti-Icing, Deicing, and Defrosting of Parked Aircraft
TO 42C-1-12	Quality Control of Chemicals
TO 42C2-1-7	Electro deposition of Metals and Metal Surface Treatments to meet Air Force Maintenance Requirements.

SAFETY SUMMARY

1 GENERAL SAFETY INSTRUCTIONS.

This manual describes physical and chemical processes which may cause injury or death to personnel, or damage to equipment if not properly followed. This safety summary includes general safety precautions and instructions that must be understood and applied during operation and maintenance to ensure personnel safety and protection of equipment. Prior to performing any task, the WARNINGs, CAUTIONs and NOTEs included in that task shall be reviewed and understood.

2 WARNINGS, CAUTIONS, AND NOTES.

WARNINGs and CAUTIONs are used in this manual to highlight operating or maintenance procedures, practices, conditions or statements which are considered essential to protection of personnel (WARNING) or equipment (CAUTION). NOTEs are used in this manual to highlight operating or maintenance procedures, practices, conditions or statements which are not essential to protection of personnel or equipment. The headings used and their definitions are as follows:

WARNING

Highlights an essential operating or maintenance procedure, practice, condition, statement, etc., which if not strictly observed, could result in injury to, or death of, personnel or long term health hazards.

CAUTION

Highlights an essential operating or maintenance procedure, practice, condition, statement, etc., which if not strictly observed, could result in damage to, or destruction of, equipment or loss of mission effectiveness.

NOTE

Highlights an essential operating or maintenance procedure, condition or statement.

3 SAFETY PRECAUTIONS.

The following safety precautions shall be observed while performing procedures in this manual.

- Some cleaning materials specified herein are flammable and/or toxic. Keep away from open flame or other ignition sources. Do not use synthetic wiping cloths with flammable solvents. Open all circuit breakers associated with battery power prior to application of any flammable solvent. Provide adequate ventilation and avoid skin/eye contact. Wear Personal Protective Equipment (PPE). Consult the Material Safety Data Sheets (MSDS) for specific information on hazards, effects and protective equipment requirements.
- Some cleaning processes described herein use materials and generate effluent that may be hazardous to personnel and the environment. Contact the local bioenvironmental engineer and safety office for guidance on PPE and other health and safety precautions, and waste disposal.
- Some cleaning operations described herein utilize power tool operations and abrasive blasting operations which often generate toxic/hazardous airborne particles. Always wear proper PPE.
- Ensure that all electrical power is disconnected and all systems in aircraft, missiles, or equipment are deactivated before starting cleaning operations on avionics, electronics, or electrical equipment to prevent electrical shock.
- Remove jewelry and remove/cover loose fitting clothing before operating power equipment to prevent entanglement and injury.
- Cleaning with compressed air can create airborne particles that may enter eyes or penetrate skin. Pressure shall not exceed 30 PSIG. Wear goggles. Do not direct compressed air against skin.
- Depleted uranium is extremely toxic and shall be worked only under a license from the Nuclear Regulatory Agency (NRA). Machining or other work, such as surface sanding, may be done only by the licensee. No drilling, sanding, abrasive blasting, or other mechanical work is permitted on depleted uranium by any field level (organizational or intermediate) maintenance activity. If the protective finish (plating) which covers the depleted uranium is chipped, peeled, or otherwise removed so the dark gray or black uranium oxide is visible, the part must be returned to the licensee for rework or disposal. Packaging and shipping procedures shall conform to AFI 40-201 and any other related current regulations for handling radioactive materials.

CHAPTER 1
INTRODUCTION

1.1 CORROSION CONTROL PROGRAM.

All activities responsible for maintenance of aircraft, missiles, and related equipment shall establish corrosion prevention and control programs as required by AFI 21-105. The type of program depends upon the environment to which the aircraft, missile, or equipment may be exposed. Aircraft, missiles, and equipment may be exposed to industrial gases, salts, rain, mud, and mists containing sea salts if located near salt water. A comprehensive corrosion prevention and control program shall provide a Structural Maintenance Work Center with personnel trained in the prevention, early detection, reporting, and repair of corrosion damage. In addition, such a program requires a dedicated effort by all maintenance personnel to prevent corrosion from occurring and/or to detect it in its initial stages so it can be treated early thus minimizing costly repairs and improving the operational readiness of aircraft, missiles, and equipment.

1.1.1 Training. All personnel performing maintenance on aircraft, missiles, and related equipment shall be trained in basic corrosion prevention and control skills and must be fully aware of the reasons for the corrosion prevention and control program. Without such training and understanding, more severe damage and additional problems will result.

1.1.2 Maintenance. An effective corrosion prevention and control program shall include thorough cleaning, inspection, preservation, and lubrication, at specified intervals, in accordance with Chapters 3 and 4. Check for corrosion damage and integrity of protective finishes during all scheduled and unscheduled maintenance. Early detection and repair of corrosion will limit further damage. When corrosion is discovered, treat corrosion as prescribed in Chapters 5 and 7 as soon as possible using only approved materials, equipment, and techniques. Only affected areas shall be repaired. Seal in accordance with Chapter 6, and paint as required in accordance with TO 1-1-8 and the systems peculiar TO All maintenance personnel shall report corrosion promptly in accordance with established Air Force directives.

1.1.3 Facilities. In accordance with Paragraph 7.10.5 of AFH 32-1084 titled “FACILITY REQUIREMENTS”, bases with a large number of aircraft (40 or more large or medium assigned aircraft) or located in a severe environment are authorized, with proper justification, a Corrosion Control Hanger and an aircraft wash hanger.

1.2 SAFETY.

Safety is everyone’s business and concern.

1.2.1 Responsibility of Supervisors. Work center supervisors shall receive the following training in accordance with established Air Force directives:

- The recognition and elimination of hazards.
- Occupational safety and health.
- The safety of the individual.
- Accident investigation and reporting.
- The inspection and maintenance of personal protective equipment (PPE).

1.2.1.1 Supervisors shall ensure that all corrosion control personnel are informed of: Current safety procedures;

- Current safety procedures.
- Characteristics of materials to which they will be exposed.
- Required protective clothing and personal protective equipment (PPE) to ensure safety of personnel.

1.2.1.2 In addition, supervisors shall ensure that an adequate supply of safety equipment is in a ready-for-issue condition, and that personnel under their control are given, and use, appropriate protective equipment to prevent accidents, injuries, and occupational illness. Maintenance personnel shall use the appropriate equipment while exposed to hazardous conditions, and shall report any protective equipment that is broken, damaged, defective, or inadequate to the supervisor. No one shall use protective equipment that is not in a satisfactory and serviceable condition. Personnel shall comply with occupational safety and health requirements, including medical examinations, respirator training and fit testing, and protection for eyes, ears, head, skin, and feet.

1.2.2 Materials handling. Many of the materials and procedures outlined in this manual are potentially hazardous to personnel and potentially damaging to aircraft, missiles, and equipment, especially when improperly used. When using any chemicals, such as paint removers, detergents, conversion coatings, and solvents, follow the correct procedures and use appropriate protective gear to prevent personnel injury and structural damage. Read the appropriate warnings and cautions in this manual prior to use of any hazardous materials. Misuse of certain materials can damage parts or cause corrosion which may lead to catastrophic failure Refer to DOD 6050.5-LR, Hazardous Materials Information System, and the appropriate Air Force directives for the handling, storage, and disposal of hazardous materials. Refer to local directives and policies pertaining to hazardous

waste management. When in doubt, contact the base safety office, and/or bioenvironmental engineer for assistance.

1.3 MATERIALS.

Consumable materials listed in Appendix A and accessories listed in Appendix B shall be used for corrosion prevention and control. The materials and equipment listed have been approved only after extensive testing to prove their ability to perform properly and effectively without damage to any of the metallic or nonmetallic materials used in aircraft, missiles, and related equipment. Only those materials listed in this manual shall be used for cleaning and corrosion prevention and control of aircraft, missile, and equipment components. Materials listed in other manuals shall be used only when required procedures are not covered by this manual. Materials or processes considered to be an improvement over existing ones shall be forwarded to the Aircraft System Program Director (SPD) or the Missile or Equipment System Program Manager (SPM) and the Air Force Corrosion Prevention and Control Office (AFCPCO), AFRL/MLS-OLR, for further evaluation. When approved materials are not available, substitutions shall only be made after approval by the appropriate SPD/SPM in conjunction with the AFCPCO. When several methods or materials are listed, the preferred one is listed first, with alternates following.

CHAPTER 2
CORROSION THEORYYOUNGSTOWN-WARREN REG. APT.

2.1 INTRODUCTION TO CORROSION THEORY.

This chapter is an introduction to corrosion theory, the causes of corrosion, and the factors which influence its development. The various forms of corrosion and the effect of corrosive environments on aircraft and metals are described. The purpose of this discussion is to provide maintenance personnel with the background knowledge necessary to understand the causes of corrosion and to minimize corrosion damage.

2.2 DEFINITION OF CORROSION.

Corrosion is the electrochemical deterioration of a metal because of its chemical reaction with the surrounding environment. This reaction occurs due to the tendency of metals to return to their naturally occurring states, usually oxide or sulfide ores. For example, iron in the presence of moisture and air will return to its natural state, iron oxide or rust. Aluminum and magnesium form corrosion products that are white oxides or hydroxides. When a water solution containing soluble salts is present, corrosion of many alloys can occur easily at ambient temperatures. This type of corrosion can be effectively treated by maintenance personnel as discussed in this manual. Corrosion can also occur in the absence of water, but only at high temperatures such as those found in gas turbine engines. However, the most common type of corrosion (and the one that can be most effectively treated by maintenance personnel) is electrochemical corrosion.

2.3 CHEMICAL DEFINITIONS.

2.3.1 Atom. The smallest unit of an element. There are over 100 elements, including metals such as aluminum, magnesium, gold, platinum, iron, nickel, titanium, cadmium, chromium, copper, silver, lead, uranium, beryllium, zinc and carbon and non-metals such as hydrogen, oxygen, nitrogen, sulfur, chlorine, helium and boron.

2.3.2 Electron. A negatively charged particle much smaller than an atom. An electric current occurs when electrons are forced to move through metal conductors. Electrons flow through water solutions only in the presence of ions.

2.3.3 Ions. Atoms or groups of atoms bound together which are either positively or negatively charged. An electric current occurs when ions are forced to move through water solutions. Ions cannot move through metal conductors.

2.3.4 Electrolyte. A liquid (usually water) solution containing ions. Salt water is an electrolyte: an aqueous (meaning, water) solution of sodium ions and chloride ions. Electrochemistry is the branch of chemistry concerned with chemical reactions at surfaces in contact with electrolytes.

2.4 THEORY OF CORROSION.

All structural metals will corrode to some extent in a natural environment. When a metal corrodes, the metal atoms lose electrons and become positively charged metal ions in the electrolyte. In solution, the positively charged metal ions can combine with negatively charged ions to form corrosion products, such as metallic chlorides, oxides, hydroxides, sulfides, etc. Four conditions must exist before this type of corrosion can occur.

2.4.1 Anode. A metal which has a tendency to corrode must be present (the corroding metal is known as the anode).

2.4.2 Cathode. A dissimilar conductive material (the cathode) which has less tendency to corrode than the anode must be present (such as a different metal, a protected part of the same metal, or conductive plastics).

2.4.3 Electrolyte. A conductive liquid (electrolyte) must connect the anode and cathode (so that ions can carry electric current between them).

2.4.4 Electrical contact. Electrical contact between the anode and cathode (usually in the form of metal-to-metal contact) must exist (so that electrons can move from the anode, where they are released, to the cathode).

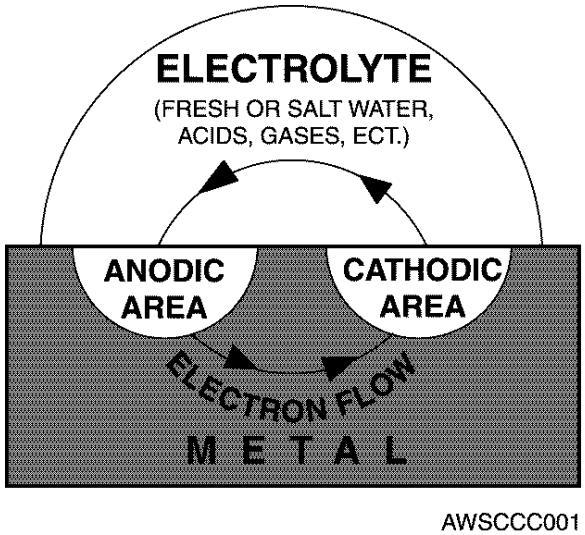

Figure 2-1. Simplified Corrosion Cell

2.4.4.1 The elimination of any one of the four conditions, illustrated in Figure 2-1, will stop corrosion. For example, a paint film on a metal surface will prevent the conducting

liquid (electrolyte) from connecting the anode and cathode, thereby, stopping the electric current (refer to Figure 2-2). Another example: two connected dissimilar metal parts placed in distilled water corrode very slowly due to a lack of ions in solution to conduct the electric current; in sea water the corrosion reaction is accelerated by a factor of 1000 or more (refer to Figure 2-3).

2.5 DEVELOPMENT OF CORROSION.

All corrosive attack begins on the surface of metals. If allowed to progress, corrosion can penetrate in the metal. If corrosion begins on an inside surface of a component (for example, the inner wall of metal tube), it may go undetected until perforation occurs. When corrosion products form, they often deposit on the corroding surface as a powdery deposit. This film of corrosion products may reduce the rate of corrosion, if the film acts as a barrier to electrolytes. Some metals (such as stainless steel and titanium), under the right conditions, produce corrosion products that are so tightly bound to the corroding metal that they form an invisible oxide film (called a passive film), which prevents further corrosion. However, when the film of corrosion products is loose and porous (such as those of carbon steel, aluminum and magnesium), an electrolyte can easily penetrate and continue the corrosion process, producing more extensive damage than surface appearance shows.

2.5.1 Corrosion Under Painted Surfaces. Paint coatings can mask the initial stages of corrosion. Since corrosion products occupy more volume than the original metal, paint surfaces should be inspected often for irregularities such as blisters, flakes, chips, lumps and worm like tracks.

2.6 FACTORS INFLUENCE CORROSION.

Some factors which influence metal corrosion and the rate of corrosion are:

- Type of metal
- Presence of a dissimilar, less corrodible metal (galvanic corrosion)
- Anode and cathode surface areas (in galvanic corrosion)
- Temperature
- Heat treatment and grain direction
- Presence of electrolytes (hard water, salt water, battery fluids, etc.)
- Availability of oxygen
- Presence of different concentrations of the same electrolytes
- Presence of biological organisms
- Mechanical stress on the corroding metal
- Time of exposure to a corrosive environment

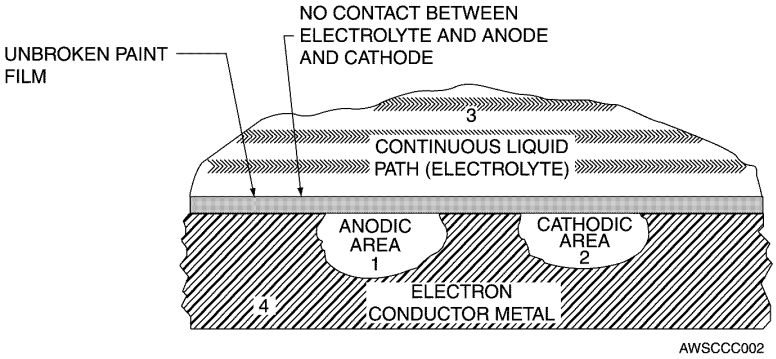

Figure 2-2. Elimination of Corrosion by Application of an Organic Film to a Metal Surface

Figure 2-3. Effect of Sea Water on Galvanic Corrosion

2.6.1 Type of Metal. Most pure metals are not suitable for aircraft construction and are used only in combination with other metals, and sometimes non-metals, to form alloys. Most alloys are made up entirely of small crystalline regions, called grains. Corrosion can occur on surfaces of those regions, which are less resistant, and also at boundaries between regions, resulting in the formation of pits and intergranular corrosion. The metals most commonly used in aircraft construction are aluminum, steel, titanium and magnesium. Cadmium, zinc, nickel, chromium and silver are sometimes used as protective platings. Metals have a wide range of corrosion resistance. The most active metals (those which tend to lose electrons easily), such as magnesium and aluminum, corrode easily and are listed at the top or anodic end of Figure 2-16. The most noble metals (those which do not lose electrons easily), such as gold and silver, do not corrode easily and are listed at the bottom or cathodic end of Figure 2-16.

2.6.2 Dissimilar Metal Coupling (Galvanic Corrosion). When two dissimilar metals make electrical contact in the presence of an electrolyte, the rate at which corrosion occurs depends on the difference in their activities, that is, their positions in Figure 2-16. The greater the difference in activity, the faster corrosion occurs. For example, magnesium would corrode very quickly when coupled with gold in a humid atmosphere. But aluminum would corrode very slowly, if at all, in contact with cadmium. A flashlight battery (or dry cell) is an example of galvanic corrosion put to practical use. In Figure 2-4, the zinc battery casing steadily corrodes supplying a steady flow of electrons, but only when the switch is closed. When the switch is open, there is no corrosion because electrons are not able to leave the zinc anode.

2.6.3 Anode and Cathode Surface Area. The rate of galvanic corrosion also depends on the size of the parts in contact. If the surface area of the corroding metal (the anode) is smaller than the surface area of the less active metal (the cathode), corrosion will be rapid and severe. But, when the corroding metal is larger than the less active metal, corrosion will be slow and superficial. For example, an aluminum fastener in contact with a relatively inert Monel structure may corrode severely, while a Monel bracket secured to a large aluminum member would result in a relatively superficial attack on the aluminum sheet (refer to Figure 2-5).

2.6.4 Temperature. Higher temperature environments tend to produce more rapid corrosion due to accelerated chemical reactions and, in humid environments, higher concentration of water vapor in the air. In addition, nightly drops in temperature can cause greater amounts of condensation, leading to increased corrosion rates.

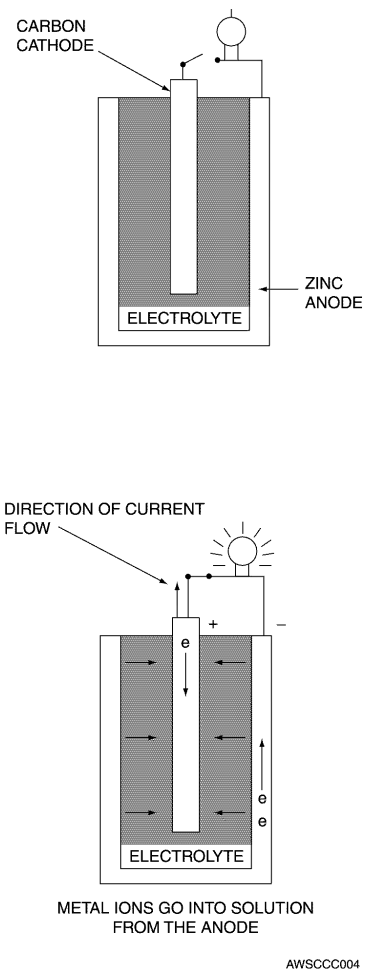

Figure 2-4. Galvanic Corrosion in a Flashlight Battery

2.6.5 Heat Treatment and Grain Direction. When heat-treated, heavy sections of metals do not cool uniformly and, as a result, tend to vary in chemical composition from one part of the metal to another. This can cause galvanic corrosion if one area is more active than another. Alloys, which are fabricated by rolling, extruding, forging, or pressing, have properties which depend highly on direction (grain length vs. cross grain). For example, exposed end grains corrode much more easily than flattened elongated surfaces in sheet stock. This explains why exfoliation occurs at the edge of aircraft skin sections or next to countersunk fasteners.

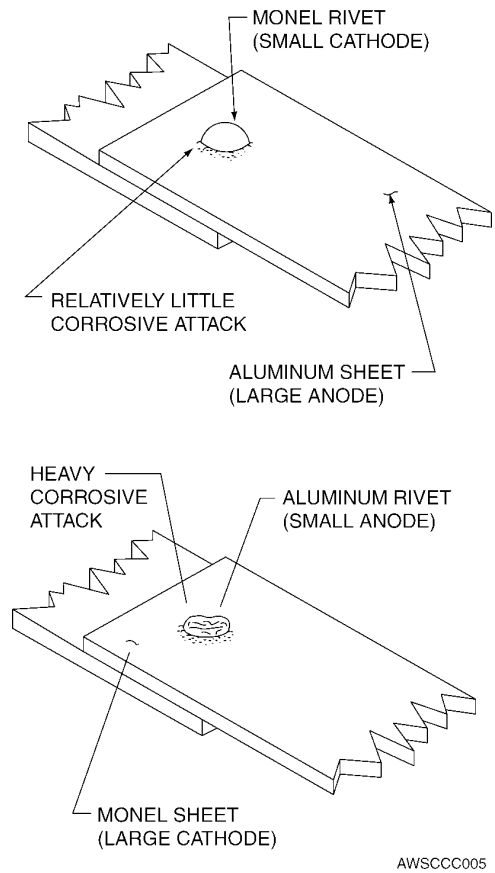

Figure 2-5. Effect of Area Relationship in Dissimilar Metal Contacts

2.6.6 Electrolytes. Electrically conducting solutions are easily formed on metallic surfaces when condensation, salt spray, rain, or rinse water accumulate. Dirt, salt, acidic stack gases and engine exhaust gases can dissolve on wet surfaces, increasing the electrical conductivity of the electrolyte, thereby increasing the rate of corrosion.

2.6.7 Oxygen. When some of the electrolyte on a metal surface is partially confined (such as between faying surfaces or in a deep crevice) metal in this confined area corrodes more rapidly than other metal surfaces of the same part outside this area. This type of corrosion is called an oxygen concentration cell or differential aeration cell. Corrosion occurs more rapidly than would be expected, because the reduced oxygen content of the confined. electrolyte causes

the adjacent metal to become anodic to other metal surface areas on the same part immersed in electrolyte exposed to the air.

2.6.8 Electrolyte Concentration. In the same way that metals can corrode when exposed to different concentrations of oxygen in an electrolyte, corrosion will also occur if the concentration of the electrolyte on the surface varies from one location to another. This corrosive situation is known as a concentration cell.

2.6.9 Biological Organisms. Slimes, molds, fungi and other living organisms (some microscopic) can grow on damp surfaces. Once they are well established, the area tends to remain damp, increasing the possibility of corrosion. Their presence can cause the areas they occupy to have different oxygen and electrolyte concentrations. In addition, corrosive wastes are secreted, which cause corrosion.

2.6.10 Mechanical Stress. Almost all alloys used in aircraft construction are sensitive to a form of corrosion known as stress corrosion cracking. Manufacturing processes such as machining, forming, welding, or heat treatment can leave stresses in aircraft parts. This residual stress and/or stress applied to a part causes corrosion to proceed more rapidly in structurally important regions of the part until failure occurs.

2.6.11 Time. As time goes on, metals naturally tend to corrode. In some cases, the corrosion process occurs at the same rate, no matter how long the metal has been exposed to the environment. In other cases, corrosion can decrease with time, due to the barrier formed by corrosion products, or increase with time if a barrier to corrosion is being broken down.

2.7 TYPES OF CORROSION.

Corrosion is catalogued and typed in many ways. Occasionally, different names are used for the same type of corrosion. The common types of corrosion are described below.

2.7.1 Uniform Surface Corrosion. Uniform surface corrosion or etching results from a direct chemical attack on a metal surface and involves only the metal surface. On a polished surface, this type of corrosion is first seen as a general dulling or etching of the surface and, if the attack is allowed to continue, the surface becomes rough and possibly frosted in appearance. This type of corrosion appears uniform because the anodes and cathodes are very small and constantly shift from one area of the surface to another. An example is the etching of metals by acids. The discoloration or general dulling of metal created by exposure to elevated temperatures is not considered to be uniform surface corrosion.

2.7.2 Galvanic Corrosion. Galvanic corrosion occurs when different metals are in contact with each other and an electrolyte, such as salt water. It is usually recognizable by the presence of a buildup of corrosion at the joint between the metals. For example, aluminum skin panels and stainless steel doublers, riveted together in an aircraft wing, form a galvanic couple if moisture and contamination are present. Figure 2-6 shows galvanic corrosion of magnesium adjacent to steel fasteners. When metals which are known to be in electrical contact are well separated from each other in Figure 2-16, galvanic corrosion is probably occurring.

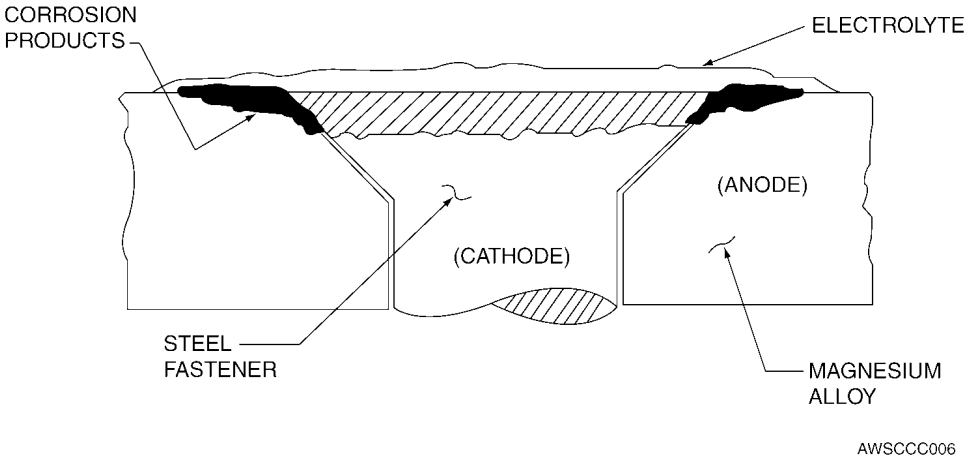

Figure 2-6. Galvanic Corrosion of Magnesium Adjacent to a Steel Fastener

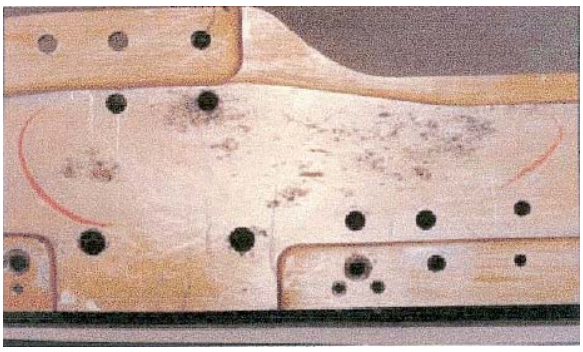

Figure 2-7. Pitting of an Aluminum Wing Assembly

2.7.3 Pitting Corrosion. The most common corrosion on aluminum and magnesium alloys is called pitting (Figure 2-7). It is first noticeable as a white or gray powdery deposit, similar to dust, which blotches the surface. When the deposit is cleaned away, tiny pits or holes can be seen in the surface (Figure 2-8). Pitting corrosion can also occur in other types of alloys. The combination of small active anodes to large passive cathodes cause severe pitting.

2.7.4 Intergranular Corrosion. Intergranular corrosion is an attack on the grain boundaries of the metal. A highly magnified cross section of any commercial alloy (refer to Figure 2-9 and Figure 2-10) shows the granular structure of the metal. It consists of quantities of individual grains, each having a clearly defined boundary, which chemically differs from the metal within the grain. Frequently the grain boundaries are anodic (tend to corrode more easily) to the metal within the grain. When in contact with an electrolyte, rapid corrosion occurs at the grain boundaries. Figure 2-11 shows intergranular corrosion of 7075-T6 aluminum alloy adjacent to steel fasteners. In this example, the grain boundaries are anodic to both the metal grain and the steel fastener.

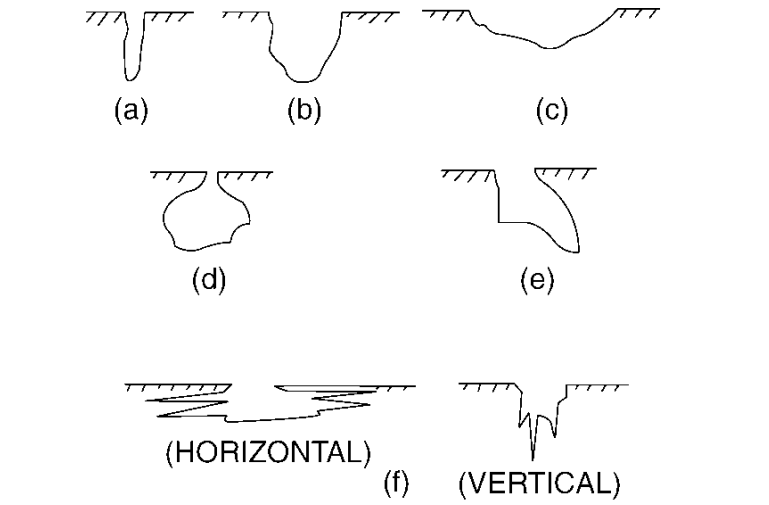

VARIATIONS IN THE CROSS-SECTION SHAPE OF PITS.
(a) NARROW AND DEEP. (b) ELLIPTICAL. (c) WIDE AND SHALLOW. (d) SUBSURFACE. (e) UNDERCUTTING.
(f) SHAPES DETERMINED BY MIRCOSTRUCTURAL ORIENTATION.

AWSCCC008

Figure 2-8. Cross-section of Corrosion Pits

2.7.5 Exfoliation Corrosion. Exfoliation (refer to Figure 2-12 and Figure 2-13) is an advanced form of intergranular corrosion where the surface grains of a metal are lifted up by the force of expanding corrosion products occurring at the

grain boundaries. The lifting up or swelling is visible evidence of exfoliation corrosion. Exfoliation occurs on extruded, rolled, wrought and forged high strength aluminum and magnesium parts.

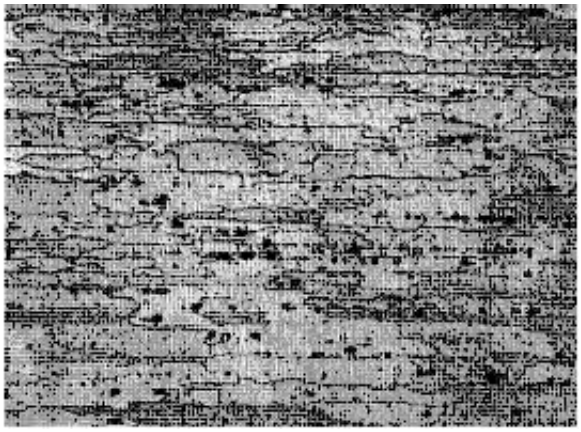

Figure 2-9. Cross-section of 7075-T6 Aluminum Alloy

Figure 2-10. Grain Structure of a Corroding Aluminum Surface

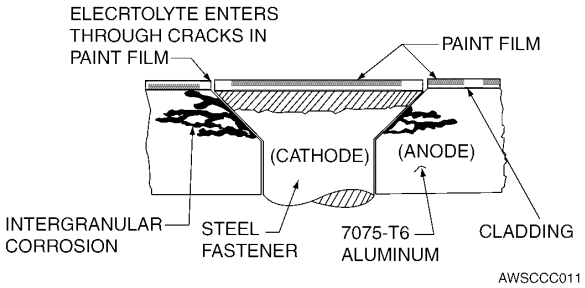

Figure 2-11. Intergranular Corrosion of 7075-T6 Aluminum Adjacent to Steel Fastener

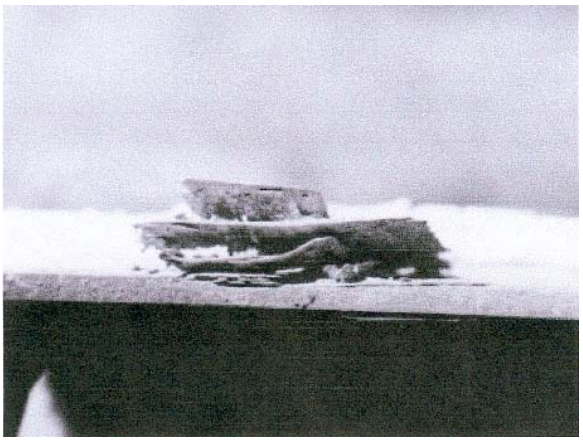

Figure 2-12. Example of Exfoliation

2.7.6 Crevice/Concentration Cell Corrosion. Crevice corrosion occurs when the electrolyte has a different concentration from one area to another. Electrolyte inside the crevice

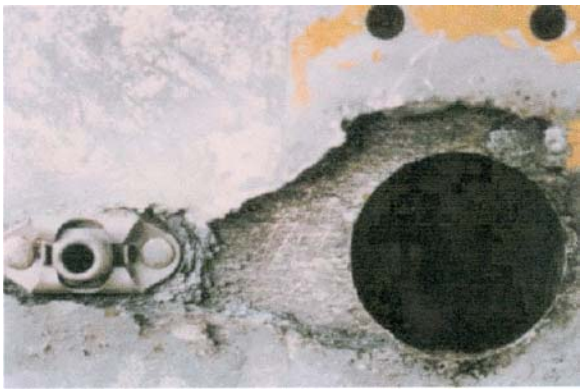

Figure 2-13. Another Example of Exfoliation

contains less oxygen and more metal ions than electrolyte just outside the crevice. As a result, the metal surfaces, even though they may be part of the same metal, have different activities and corrosion occurs inside the crevice. This kind of corrosion also occurs when a surface is covered by a foreign material. There are three general types of crevice/concentration cell corrosion (1) metal ion concentration cells (2) oxygen concentration cells; and (3) active-passive cells (Figure 2-14).

2.7.6.1 Metal Ion Concentration Cells. Stagnant electrolytes under faying surfaces will normally have a high concentration of metal ions, while a low concentration of metal ions will exist adjacent to the crevice created by the faying surface. The area of the metal in contact with the higher concentration of metal ions will be cathodic and not show signs of corrosion, but the area in contact with the lower metal ion concentration will be anodic and suffer corrosion. Figure 2-14, view A, illustrates metal ion concentration cell corrosion.

2.7.6.2 Oxygen Concentration Cells. Electrolyte in contact with metal surfaces will normally contain dissolved oxygen. An oxygen cell can develop at any point where the oxygen in the air is not allowed to diffuse into the solution, thereby creating a difference in oxygen concentration between two points. Typical locations of oxygen concentration cells are under either metallic or non-metallic deposits (dirt) on the metal surface and under faying surfaces such as riveted lap joints. Oxygen cells can also develop under gaskets, wood, rubber, plastic tape and other materials in contact with the metal surface. Corrosion will occur in the area of low oxygen concentration (anode) as illustrated in Figure 2-14, view B. Alloys such as stainless steel, which owe their corrosion resistance to surface passivity, are particularly susceptible to this type of crevice/concentration cell corrosion.

2.7.6.3 Active/Passive Cells. Metals which depend on a tightly adhering passive film, such as the oxide film on corrosion resistant steel, are prone to rapid corrosive attack by active-passive cells. The corrosive action usually starts with a deposit of dirt or salt, which creates an oxygen concentration cell. The passive film is then broken in the area of the salt deposit and the more active metal beneath the passive film will be prone to corrosive attack. This small anodic area will corrode rapidly due to the much larger area of the surrounding cathode (passive film). The result is rapid pitting of the surface, as illustrated in Figure 2-14, view C.

2.7.6.4 Stress Corrosion Cracking. Stress corrosion cracking (Figure 2-14) is the intergranular or transgranular cracking of a metal caused by the combined effects of constant tensile stress (internal or applied) and corrosion. Internal or residual stresses are produced by cold working, forming and heat treatment operations during manufacture of a part and remain concealed in the part unless stress relief operations are used. Other hidden stresses are induced in parts when press or shrink fits are used and when slightly mismatched parts are clamped together with rivets and bolts. All these stresses add to those caused by applying normal loads to parts in operation. Metals have threshold stresses below which stress corrosion cracking will not occur. This threshold stress varies from metal to metal, is different for different tempers of the same metal and is different for each of the three grain directions in which stress can be applied.

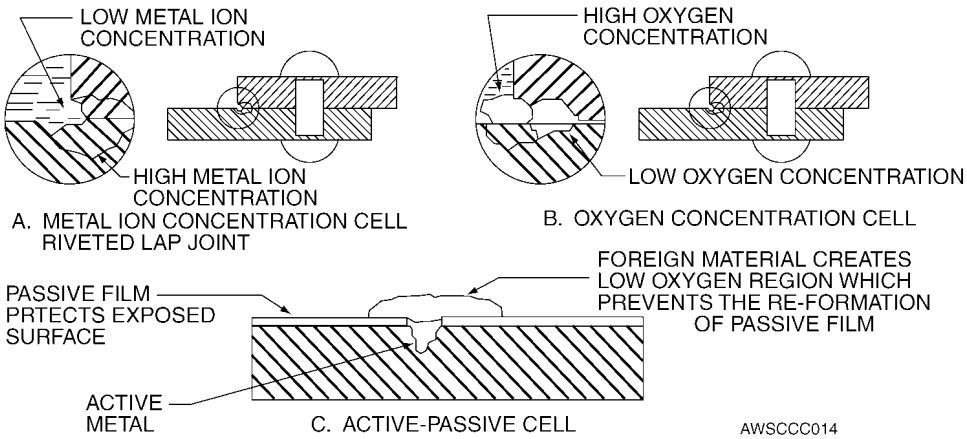

Figure 2-14. Concentration Cell Corrosion

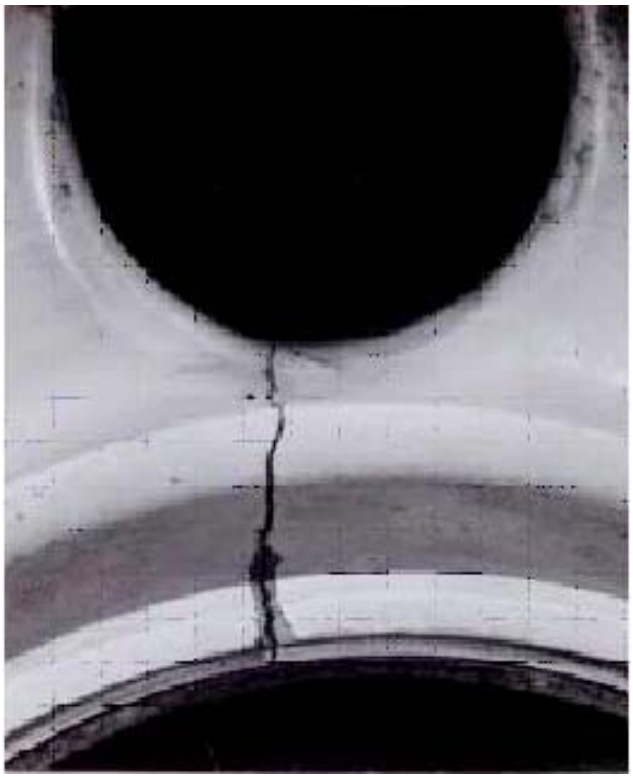

Figure 2-15. Stress Corrosion Cracking

ANODIC (High Corrosion Potential)

Lithium
Magnesium Alloys
Zinc (plate)
Beryllium
Cadmium (plate)
Uranium (depleted)
Aluminum Alloys
Indium
Tin (plate)
Stainless Steel 430 (active)
Lead
1010 Steel
Cast Iron
Stainless Steel 410 (active)
Copper (plate)
Nickel (plate)
AM 350 (active)
Chromium (plate)
Stainless Steels 350, 310, 301, 304 (active)
Stainless Steels 430, 410 (passive)
Stainless Steel 13-8, 17-7PH (active)
Brass, yellow, Naval
Stainless Steel 316L (active)
Bronze 220
Copper 110
Stainless Steel 347 (active)
Copper-Nickel 715
Stainless Steel 202 (active)
Monel 400
Stainless Steel 201 (active)
Stainless Steels 321, 316 (active)
Stainless Steels 309 13-8 17-7 PH (passive)
Stainless Steels 304, 301, 321 (passive)
Stainless Steels 201, 31, 6L (passive)
Stainless Steel 286 (active)
AM355 (active)
Stainless Steel 202 (passive)
Carpenter 20 (passive)
AM355 (passive)
Titanium Alloys
AM350 (passive)
Silver
Palladium
Gold
Rhodium
Platinum
Carbon/Graphite

CATHODIC (Low corrosion potential)

Figure 2-16. Galvanic Series of Metals and Alloys in Sea Water

2.7.6.5 Associated Hazards. Stress corrosion cracking is an extremely dangerous type of failure because it can occur at stress levels far below the rated strength of a metal, starting from what is thought to be a very minor corrosion pit. Parts can completely sever in a split second or they can crack slowly, and the rate of cracking is very unpredictable in operating service. As an example, 7075-T6 aluminum alloy can fail by stress corrosion cracking when a stress which is only 10% of its rated strength is present across the thickness of its metal grains or the short transverse grain direction.

2.7.6.6 Causes. Specific environments have been identified which cause stress corrosion cracking of certain alloys. Salt solutions, seawater, and moist salt laden air may cause stress corrosion cracking of heat treatable aluminum alloys,

high strength steels, stainless steels, and some titanium alloys. Magnesium alloys may stress corrode in moist air. Stress corrosion can be prevented by placing an insulating barrier between the metal and the corrosive environment such as protective coatings and water displacing corrosion preventive compounds. Stress relief operations during fabrication of parts will help, because it lowers the residual stress level in the parts. Shot peening a metal increases resistance to stress corrosion cracking by creating compressive stresses on the surface, which must be overcome by an applied tensile stress before the surface sees any tension load.

2.7.7 Corrosion Fatigue. Corrosion fatigue is the cracking of metals caused by the combined effects of cyclic stress and corrosion, and is very similar to stress corrosion cracking. No metal is immune to a reduction of its resistance to cyclic stressing if it is in a corrosive environment. Damage from corrosion fatigue is greater than the sum of the damage from both cyclic stresses and corrosion. Corrosion fatigue failure occurs in two stages: During the first stage, the combined action of corrosion and cyclic stress damages the metal by pitting and crack formation in the pitted area. The second stage is the continuation of crack propagation by a straight fatigue mode, in which the rate of cracking is controlled by: the stress concentration in the main cross section; and the physical properties of the metal. Fracture of a metal part due to corrosion fatigue occurs at a stress far below the fatigue limit even though the amount of corrosion may be very small. For this reason, protection of all parts subject to alternating stress is particularly important, even in environments that are only mildly corrosive. Preventive measures are the same as those given above for stress corrosion cracking.

2.7.8 Filiform Corrosion. Filiform corrosion (refer to Figure 2-17) is a special form of oxygen concentration cell corrosion or crevice corrosion, which occurs on metal surfaces having an organic coating system. It is recognized by its characteristic wormlike trace of corrosion products beneath the paint film. Filiform occurs when the relative humidity of the air is between 78 and 90%, and when the surface is slightly acidic. It starts at breaks in the coating system, such as scratches and cracks around fasteners and seams, and proceeds underneath the coating, due to the diffusion of water vapor and oxygen from the air through the coating (refer to Figure 2-18). Filiform corrosion can attack steel, magnesium, and aluminum surfaces, and may lead to more serious corrosion in some locations. Filiform corrosion can be prevented by storing equipment and aircraft in an environment with a relative humidity below 70%, by using coating systems having a low rate of diffusion for oxygen and water vapors, by maintaining coatings in good condition, and by washing equipment and aircraft to remove acidic contaminants from the surface (such as those created by pollutants in the air). Maintain coatings in good condition (prompt touch-up around fasteners) and apply corrosion preventive compounds (CPC's) when paint is damaged.

Figure 2-17. Filiform Corrosion Found Under Paint Coating on a Magnesium Panel

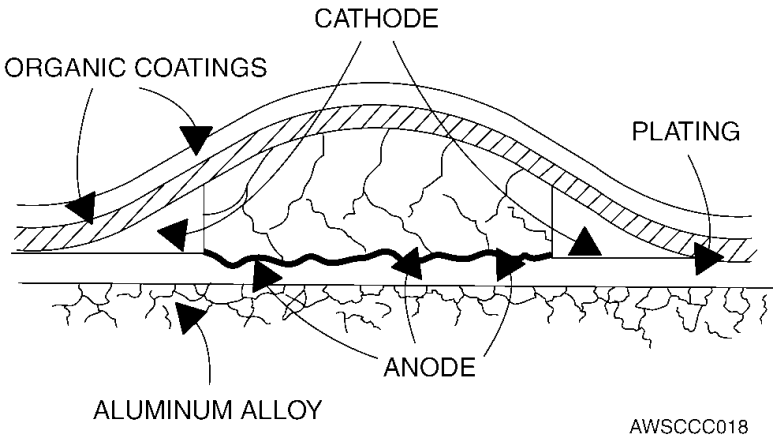

Figure 2-18. Schematic of the Development of Filiform Corrosion on an Aluminum Alloy

2.7.9 Fretting Corrosion. This is a special form of concentration cell corrosion, which occurs in combination with surface wear. The corrosion products increase the wear of the surface and the wear exposes more bare metal surface to be corroded. The overall effect is greater than the single effects of corrosion and wear added together. It has the general appearance of galling, in which chunks of metal are torn from the surface with corrosion at the torn areas or ragged pits. This type of corrosion occurs on faying surfaces of close tolerance and on parts under high pressure in a corrosive environment when there is slight relative movement of the parts such as that caused by vibration. Fretting corrosion is normally encountered in heavily loaded static joints which are subject to vibration and are not and/or cannot be sealed to prevent moisture entry, such as landing gear component attachment areas having lug holes with slight press fits or slip fit bushings with very close tolerance bolts passing through the bushings. Another area is wing root access panels or wing-to-body fairings, which are generally not tightly secured and cannot be sealed in faying surfaces.

2.7.10 High Temperature Oxidation (Hot Corrosion). Corrosion in the absence of water can occur at high temperatures, such as those found in turbine engine compressors and hot sections. When hot enough, metals can react directly with the surrounding gases producing oxide scale (by-products of oxidation). Contaminants, such as chlorides and sulfates (by-products of sulfidation), can accelerate the hot corrosion reaction by reducing the melting point of the metallic oxide and promoting its vaporization. High temperature ceramic coatings can reduce this type of corrosion, but are usually applied only by the manufacturer due to highly specialized equipment required for application.

2.8 METALS AFFECTED BY CORROSION.

Characteristics of corrosion on metals are summarized in Table 2-1. The following is a discussion of corrosion characteristics of metals commonly used on aircraft, missiles, and related equipment.

2.8.1 Magnesium. Magnesium alloys are the lightest structural metals used for aircraft and missile airframes. These alloys are highly susceptible to corrosion, which appears as white, powdery mounds or spots when the metal surface is exposed to the environment without a protective finish (refer to Figure 2-19). The normal oxide-carbonate film formed on magnesium alloys does not provide sufficient corrosion protection even in the mildest environment. The corrosion rate of a magnesium alloy increases when the alloy is immersed in water, periodically subjected to moisture, coupled to a dissimilar metal, or exposed to water in which conductive contaminants are dissolved. Corrosion of magnesium alloys can be greatly diminished by the use of the proper protective finish. Some magnesium parts in current aircraft and missiles have been originally protected by anodizing processes, such as the ASTM D1732, Class II, Type III (MIL-M-45202, Type I, Class A) HAE and the ASTM D1732, Class II, Type II (MIL-M-45202, Type I, Class C) DOW 17 coatings. The HAE process can be identified by the brown to mottled gray appearance of the unpainted surface. DOW 17 coatings have a green to grayish-green color. Coatings of this type are thicker than those applied by immersion or brushing. Anodized finishes cannot be restored in the field. Care should be taken to minimize removal of these coatings.

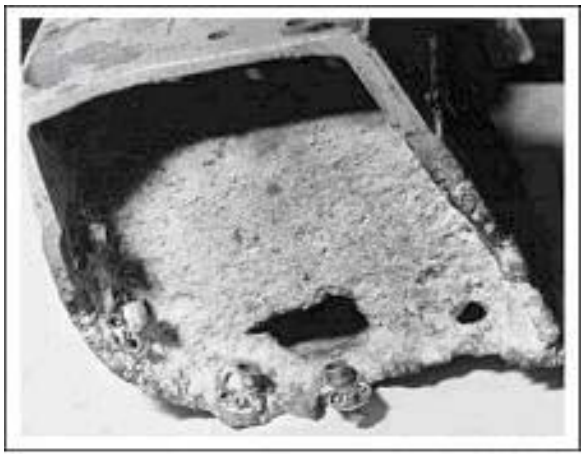

Figure 2-19. Magnesium Corrosion Products

2.8.2 Steel. Ferrous (iron) alloys are used to manufacture many aircraft and missile components, and massive structural assemblies in aircraft and missile ground support equipment, such as missile gantries, silo crib structures, frames and bodies of trailers and vans, and lesser structural parts such as brackets, racks, and panels. If unprotected, ferrous alloy surfaces (with the exception of Corrosion Resistant Steels (CRES) or stainless steels) easily corrode or rust in the presence of moisture. Ferrous alloy surfaces of structures or assemblies are normally painted or plated and painted to prevent corrosion. Corrosion of steel is easily recognized because the corrosion product is red rust (Figure 2-20). When ferrous alloys corrode, a dark corrosion product usually forms first, and when moisture is present, it converts to red rust. Further attack is promoted by the rust absorbing moisture from the air.

2.8.3 Aluminum. Aluminum and its alloys are the most widely used materials for aircraft and missile construction. Aluminum is highly anodic as evidenced by its position in the galvanic series (Figure 2-16). However, the formation of a tightly adhering oxide film offers increased resistance under mild corrosive conditions. The corrosion products of aluminum (refer to Figure 2-21) are white to gray powdery materials (aluminum oxide or hydroxide), which can be removed by mechanical polishing or brushing with abrasive. It is anodic to most other metals and, when in contact with them, galvanic corrosion of the aluminum will occur. Aluminum alloys are subject to pitting, intergranular corrosion, intergranular stress corrosion cracking, and corrosion fatigue cracking. In some cases, the corrosion products of the metal in contact with aluminum are corrosive to aluminum. Therefore, it is necessary to clean and protect aluminum and its alloys to prevent corrosion. Since pure aluminum is more corrosion resistant as well as being more anodic than most alloys, aluminum alloy sheet stock is often covered with a thin layer of nearly pure aluminum called alclad. While fully intact, the alclad layer is very resistant to corrosion because a very adherent oxide film rapidly forms on its surface to protect it. Alclad is easily removed by harsh treatment with abrasives and tooling, exposing the more corrosion susceptible aluminum alloy base metal surface. If the break in the alclad layer is small, the alclad will sacrificially corrode and protect the exposed base metal alloy because it is more anodic than the alloy. In such areas, chemical conversion coatings, paints, and corrosion preventive compounds are especially important. In a marine environment, all aluminum surfaces require protection.

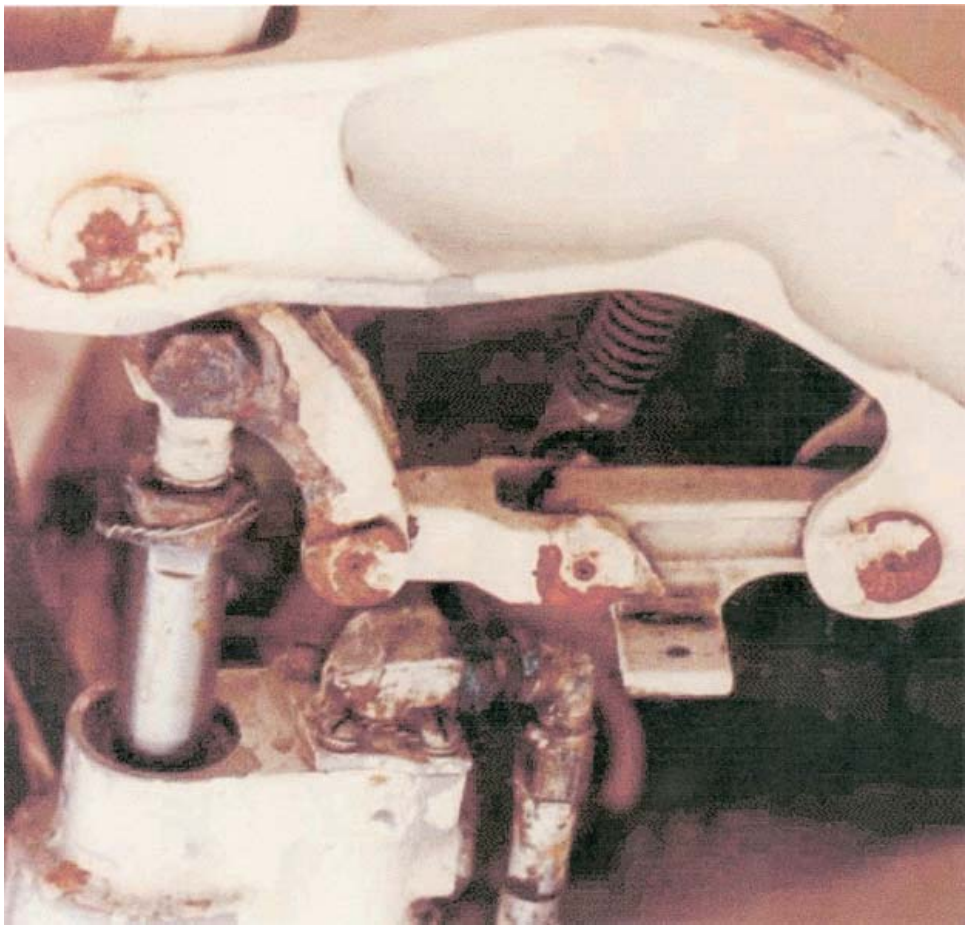

Figure 2-20. Steel Corrosion Products (Rust)

Figure 2-21. Aluminum Surface Corrosion Products

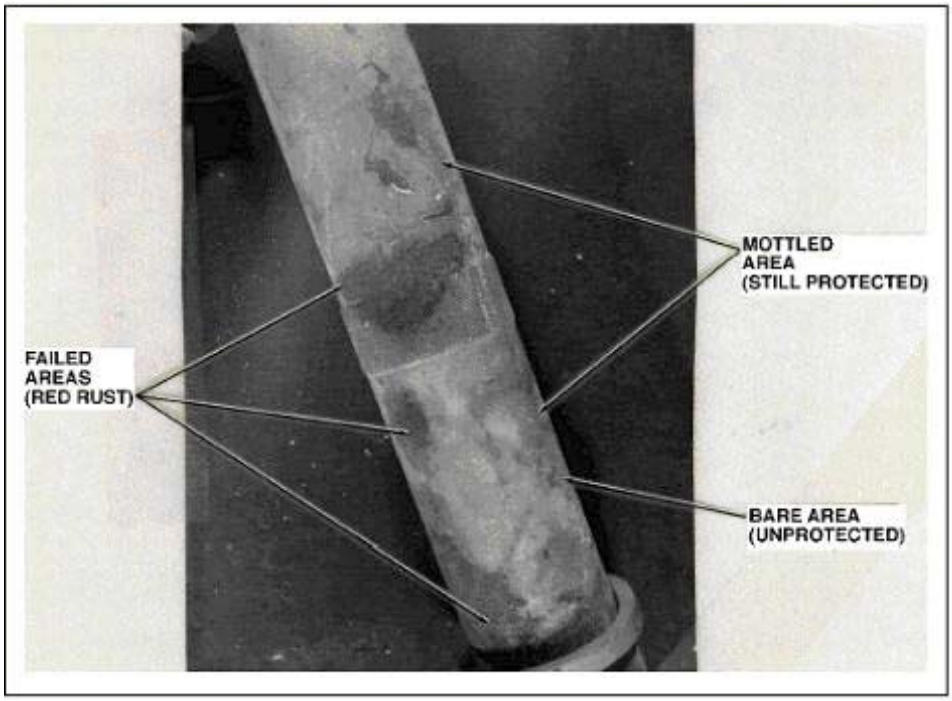

Figure 2-22. Cadmium Plated Surface Conditions

Table 2-1. Corrosion of Metals - Type of Attack and Appearance of Corrosion Products

Alloys	Type of Attack to Which Alloy Is Susceptible	Appearance of Corrosion Product
Magnesium Alloy	Highly susceptible to pitting	White, powdery, snow-like mounds, and white spots on the surface.
Low Alloy Steel (4000-8000 series)	Surface oxidation and pitting; surface and intergranular corrosion	Reddish-brown oxide (rust).
Aluminum Alloy	Surface pitting, intergranular, exfoliation, stress corrosion and corrosion fatigue cracking, and fretting	White to gray powder.
Titanium Alloy	Highly corrosion resistant; extended or repeated contact with chlorinated solvents may result in degradation of the metal's structural properties	No visible corrosion products at low temperature. Various colored surface oxides develop above 700° F (360° C). Color dependant on temperature.
Cadmium (used as a protective plating for steel)	Uniform surface corrosion; used as sacrificial plating to protect steel	From white powdery deposit to brown or black mottling of the surface.
Stainless Steels (300-400 series)	Crevice/concentration cell corrosion; some pitting in marine environments; corrosion cracking; intergranular corrosion (300 series); surface corrosion (400 series)	Rough surface; sometimes a red, brown, or black stain.
Nickel-base Alloy (Inconel, Monel)	Generally has excellent corrosion resistance qualities; susceptible to pitting in sea water	Green powdery deposit.
Copper-base Alloy, Brass, Bronze	Surface and intergranular corrosion	Blue or blue-green powdery deposit (patina).

Table 2-1. Corrosion of Metals - Type of Attack and Appearance of Corrosion Products - Continued

Alloys	Type of Attack to Which Alloy Is Susceptible	Appearance of Corrosion Product
Chromium (plate)	Pitting (promotes rusting of steel where pits occur in plate)	No visible corrosion products; blistering of plating due to rusting of the base metal and lifting of plating.

2.8.4 Anodized Aluminum. Some aluminum parts are protected with an electrochemically applied oxide coating (i.e., anodize). An aluminum oxide film on aluminum is a naturally occurring protective film, and anodizing merely increases the thickness and density of the oxide film. When this coating is damaged in service, it can be only partially restored by chemical conversion coating treatment of the damaged area (Chapter 5, Section II). Avoid damage (e.g., nicks and scratches) to the anodized surface during processing of anodized aluminum alloy parts.

2.8.5 Titanium. Titanium and titanium alloys have many uses in aircraft and missiles at temperatures up to 1,000° F (540° C). Above 1000° F, titanium readily absorbs gases from the surrounding air becoming very brittle. Titanium and its alloys are highly corrosion resistant because an extremely adherent oxide film forms on their surfaces almost immediately upon contact with air and thus provides a protective barrier. This is identical to the way aluminum forms a protective oxide film on its surface. Even at temperatures approaching 1,000o F, titanium retains its strength and corrosion resistance. When titanium is heated, different oxides having different colors form on the surface. A blue oxide coating will form at 700° to 800° F (370° to 425° C), a purple oxide will form at 800° to 950° F (425° to 510° C), and a gray or black oxide will form at 1,000° F (540° C) or higher. These are protective discolorations and should not be removed. Titanium is the less active member (cathodic) of most dissimilar metal couples, and could possibly greatly accelerate corrosion of a dissimilar metal coupled to it. However, electrical insulation between titanium and other metals is provided by the rapidly formed, very adherent, nonconductive oxide film, which prevents galvanic corrosion of the other metal. Frequent inspection of such areas is required to ensure that the oxide film has not failed and allowed corrosion to begin. Under certain conditions, chlorides and some chlorinated solvents may induce stress corrosion cracking of certain titanium alloys.

2.8.6 Copper and Copper Alloys. Copper and copper alloys are quite corrosion resistant and corrosion is usually limited to staining and tarnish. Generally, such changes in surface conditions are not dangerous and should ordinarily have no effect on the part. Copper corrosion is evidenced by the accumulation of blue or blue-green corrosion products on the corroded part. Protective paint coatings are seldom required because of the inherent resistance of the metal. However, paint finishes may be applied for decorative purposes or if the normal tarnish or green patina on the copper is objectionable. The green patina is merely a thin coating consisting mainly of basic copper sulfate and perhaps hydrated copper carbonate. The patina in the thin, firmly adhering state actually offers increased corrosion protection to the base metal, but the patina in a rough or frosted state should be removed. When coupled with most metals used in aircraft construction, copper is the less active metal and greatly accelerates corrosion of the other metals. This is especially true in copper/aluminum couples. Examples are usually found in electrical components and in areas where copper bonding strips or wires are fastened to an aluminum chassis or structural components.

2.8.7 Cadmium. Metal parts are plated either to increase the corrosion resistance of the parts or to develop certain physical properties on the surface of the parts, such as abrasion (wear) resistance and high temperature oxidation resistance. Parts may also be plated to create a compatible dissimilar metal contact, to provide a satisfactory surface for soldering, or to provide a sacrificial metal layer. Cadmium is used as a coating to protect metal parts and to provide a compatible surface when a part is in contact with other materials. Attack on cadmium is evidenced by brown to black mottling of the surface or as white powdery corrosion products. When cadmium shows mottling and isolated voids or cracks in the coating, the plating is still performing its protective function. The cadmium plate on iron or steel continues to protect until such time as actual iron rust appears (refer to Figure 2-22). Even then, any mechanical removal of corrosion products should be limited to metal surfaces from which the cadmium has been depleted.

2.8.8 CRES/Stainless Steel. Basically, stainless steels, or corrosion resistant steels (CRES), as they are more properly described, are alloys of iron with chromium and nickel. Many other elements, such as sulfur, molybdenum, vanadium, cobalt, columbium, titanium, and aluminum are added in various amounts and combinations to develop special characteristics. Stainless/CRES steels are much more resistant to common rusting, chemical action, and high temperature oxidation than ordinary steels, due to the formation of an invisible oxide film or passive layer on the surface of these alloys. Corrosion and heat resistance are the major factors in selecting stainless/CRES steels for a specific application. However, it should be well understood that stainless/CRES steels are not the cure-all for all corrosion problems, due to service conditions, which can destroy the oxide film on their surfaces. Stainless/CRES steels are highly susceptible to crevice/concentration cell corrosion and stress corrosion cracking in moist, salt laden environments and can cause galvanic corrosion of almost any other metal with

which they are in contact if proper techniques of sealing and protective coating are ignored. Stainless/CRES steels may be magnetic or non-magnetic. The magnetic steels are identified by numbers in the American Iron and Steel Institute (AISI) 400-series, such as 410, 430, etc. These steels are not as corrosion resistant as the non-magnetic steels which are identified by numbers in the AISI 300-series, such as 304, 316, etc. The AISI 300-series steels have nickel contents ranging from 6% to 22%, while the 400-series steels have nickel contents of only 2%.

2.8.9 Nickel and Chromium. Nickel and chromium are used as protective platings. Chromium plating is also used to provide a smooth, wear-resistant surface and to reclaim worn parts. Where corrosion resistance in a marine environment is required, a nickel under-coat is used. The degree of protection is dependent upon plating thickness. Both of these metals form continuous oxide coatings that can be polished to a high luster and still protect not only themselves but also any underlying metal. Chromium platings contain micro-cracks, and corrosion/rust originates on the base metal below these separations and spalls the plating from the surface. Figure 2-22 shows the results of a failed chromium plate.

2.8.10 Silver, Platinum, and Gold. These metals do not corrode in the ordinary sense, although silver tarnishes in the presence of sulfur. The tarnish is a brown-to-black film. Gold tarnish is not really corrosion but is a very thin layer of soils or contaminants that shows up as a darkening of the reflecting surfaces. All these metals are highly cathodic to almost all other metals and can cause severe galvanic corrosion of almost any metal with which they are in contact in the presence of moisture if joint areas are not sealed or otherwise insulated.

2.8.11 Graphite/Carbon Fiber Composites. Graphite or carbon fiber composites are materials, which consist of reinforcing fibers in a matrix, made of organic resin, usually epoxy. They are an important class of aviation materials because of their high strength-to-weight ratios and high stiffness. Since carbon is the least active metal in the galvanic series, it will accelerate the corrosion of any aircraft metal to which it is coupled. Insulation between graphite or carbon epoxy composites and other metals is necessary to prevent dissimilar metal attack on the attached part.

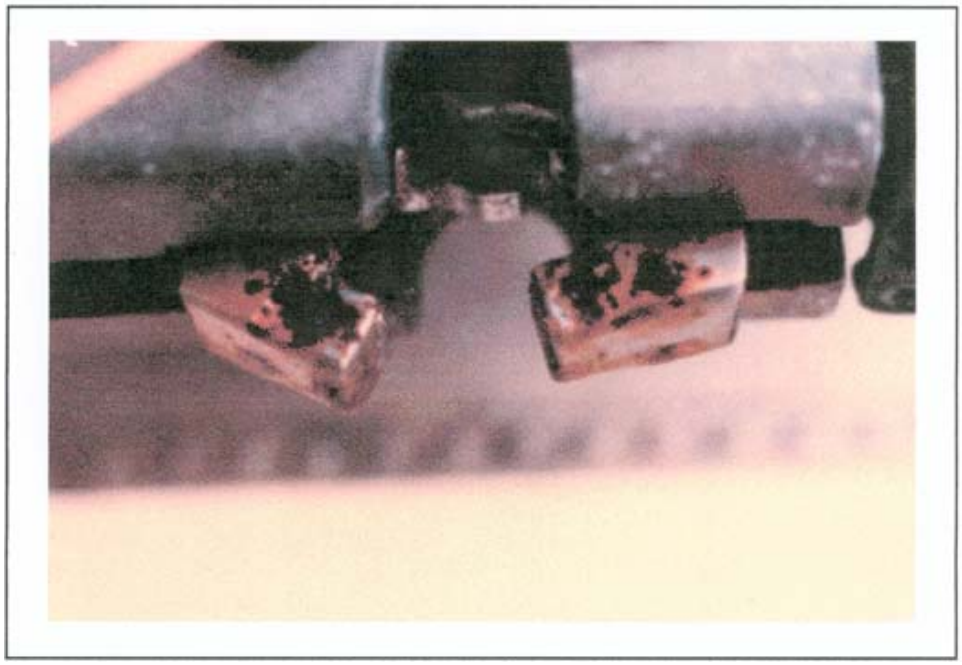

Figure 2-23. Failed Chromium Plating

2.9 CORROSIVE ENVIRONMENTS.

Corrosion of aircraft, missiles, and equipment is caused by both natural and man-made environments. Natural conditions, which affect the corrosion process, are moisture, temperature, salt atmospheres, ozone, sand, dust, solar radiation, insects and birds, and microorganisms. Man-made conditions, which also affect the corrosion process, are industrial pollution, manufacturing operations, storage conditions, and shipment. By understanding these conditions, maintenance personnel will be better able to prevent aircraft damage.

2.9.1 Moisture. Moisture is present in air as a gas (water vapor) or as finely divided droplets of liquid (mist or fog) and often contains contaminants such as chlorides, sulfates, and nitrates, which increase its corrosive effects. Moisture enters all areas of an aircraft or missile that air can enter. All enclosed areas, which are not sealed, allow air to enter and leave as the difference in pressure between inside and outside changes. These pressure differences occur when the aircraft changes altitude, when atmospheric pressure changes, and when the temperature of air inside an enclosed area changes. Moisture will condense out of air when the air becomes too cool to hold all of the moisture in it. The dew found on aircraft and missile exteriors and many times on their interior surfaces after a cool night is the result of condensation.

2.9.1.1 Condensed Moisture. Condensed moisture will usually evaporate as surrounding air warms, but will leave its contaminants (residues), including salts, behind. This can result in the build-up of soils and salt contamination. Condensed moisture and its contaminants can also be trapped in close fitting wetable joints, such as faying surfaces. Some gasket and packing materials will absorb several times their weight in water and, when heated, can transmit this retained moisture into the sealed area. Moisture can accumulate in such areas through successive cycles of warming and cooling leaving pools of moisture and a relative humidity approaching 100%. This is known as the desert still effect. In addition, moisture can be drawn into poor bond lines by capillary action (wicking). Conditions of temperature and humidity can vary widely in separate sections of aircraft depending on the success of environmental sealing condensation, and location near heat-generating equipment.

2.9.1.2 Effect of Moisture. Electrolyte formation results from condensation and/or collection of moisture. All nonmetals absorb some moisture, which may cause changes in dimensional stability, dielectric strengths, ignition voltages, and volume insulation resistances. In general, organic matrix composites are adversely affected by moisture and may suffer a loss of strength and stiffness from exposure. Hermetic sealing (liquid and vapor proof at normal temperatures and pressures) is recommended for moisture-critical items such as capacitors and quartz crystals. Refer to TO 1-1-689 for additional information related to electronics equipment.

2.9.2 Temperature. Temperatures at the high end of the range for which equipment is designed may result in either improvement or degradation of equipment, depending on conditions. Some electronic equipment may not function properly at high temperatures. Generally, corrosion and other harmful processes (such as the degradation of non-metallic materials) increase as temperatures rise, but in some instances, moderate increases in temperature may serve to reduce corrosion by preventing condensation. Growth of molds and bacteria is also inhibited by temperatures above 104° F (40° C). Temperatures at the low end of the design range generally reduce the rate of corrosion.

2.9.3 Salt Atmospheres. When dissolved in water, salt particles form strong electrolytes. The ocean, which carries from 3.5 to 3.9% salt, is the world's primary source of salt. Normal sea winds carry from 10 to 100 pounds of sea salt per cubic mile of air. Since dissolved salts are strong electrolytes, it is easy to understand why shipboard and coastal environments are highly corrosive.

2.9.4 Ozone. Ozone is a particularly active form of oxygen, which is formed naturally during thunderstorms, by arcing in electrical devices, and by photochemical reactions in smog. When ozone is absorbed by electrolyte solutions in contact with metals, it increases the rate of corrosion. It also oxidizes many nonmetallic materials, being particularly harmful to natural and certain types of synthetic rubber. Rubber seals stored near welding equipment have experienced complete degradation.

2.9.5 Other Industrial Pollutants. Carbon (from internal combustion engine exhaust), nitrates (from agricultural fertilizers), ozone (from electrical motors and welding operations), sulfur dioxide (from engine exhaust and industrial and ship smoke stacks), and sulfates (from automobile exhaust) are important airborne pollutants. The combination of these pollutants contributes to the deterioration of non-metallic materials and severe corrosion of metals.

2.9.6 Sand, Dust, and Volcanic Ash. Sand, dust, and volcanic ash are present in many areas. In industrial areas, they often contain a number of tar products, ashes, and soot. Dust is also found in the tropic zones during times of little or no rainfall. Sand and dust are extreme problems in the deserts, since dry, powdery sand and dust are carried by wind. During sandstorms, they can penetrate sealed equipment as well as many internal areas of airframes, and small sand particles are often blown as high as 10,000 feet by the siroccos hot, dust laden winds). Sand, dust and volcanic ash are hygroscopic and, when present on internal or external surfaces of aircraft or electronic parts, can absorb and hold moisture. The presence of sand, dust, and volcanic ash may also effect the operation of electrical contacts, prevent proper action of rotating motor-drive devices, and cause malfunctions of indicating instruments. Dust from volcanic areas contains chlorides and sulfates, which are extremely corrosive in the presence of moisture. Although small amounts of sand or dust may be unnoticed by operating personnel, they may be sufficient to promote corrosion and wear.

2.9.7 Solar Radiation. The two ranges of solar radiation most damaging to materials are ultraviolet, the range that causes sunburn, and infrared, the range that makes sunlight feel warm. On earth, maximum solar radiation occurs in the tropics and equatorial regions, but considerable damage occurs in the temperate zones as a result of solar heating, photochemical effects, and combinations of these two phenomena. Non-metals, especially organic and synthetic materials, are strongly affected by sunlight. Both natural and synthetic rubber deteriorates rapidly in sunlight. After extended exposure, plastics darken, paints lose their protective characteristics, polymers undergo marked decreases in strength and toughness, and colors fade. This can lead to removal of essential color-coding on tubing and electronic components. Most electronic equipment is housed in enclosed structures and is protected from solar radiation. Extra care must be taken in the selection and surface treatment of parts, such as cables and harnesses that are to be exposed to exterior environments.

2.9.8 Climate. Warm, moist air, normally found in tropical climates, tends to accelerate corrosion while cold, dry air, normally found in arctic climates, tends to reduce corrosion rates. Corrosion does not occur in very dry conditions. For this reason, desiccants are used in shipping containers to produce very dry local environments. The operational climate extremes have always been considered in aircraft design. However, certain areas within an aircraft, such as the cockpit and air-conditioned equipment bays, may be subjected to climatic conditions very different from external areas of the aircraft. Relatively warm, dry air that has been cooled by air conditioners, thus increasing its relative humidity, and ducted into interior areas of the aircraft without drying or passing it through an expansion valve can release sufficient moisture to accelerate corrosion. It is imperative to consider not only the exterior operational environment but also the environments in which the equipment will be fabricated, transported, reworked, repaired, and mounted inside the aircraft or missile.

2.9.8.1 Desert. Hot, wind-swept deserts create a severe maintenance problem because powdery dust can penetrate even supposedly sealed components. High daytime temperatures, high humidities (in areas such as the Persian Gulf), ultraviolet radiation, and fine dust are the four most serious, destructive elements of the desert climate. Non-metallic materials suffer the most damage from the hot desert climates where air temperature during the day may reach 124° F (51° C). Temperatures inside closed containers may be 100° F (38° C) higher than external air temperatures.

2.9.8.2 Temperate Zones. The temperate or intermediate climate zone encompasses most of the North American and European continents. These areas at various times of the year may approximate the extremes of polar, desert, or tropical temperatures and humidity. The temperate zone temperatures range from -25° to +59° F (-32° to +15° C) in the winter and from +59° to +125° F (+15° to +52° C) in the summer. The relative humidity (RH) also fluctuates between 5 and 100. The most critical areas are coastal locations, during the warm periods of the year in which the RH approaches 100at night and the air has high concentrations of salt. Moisture from this salt-laden air can condense on equipment during early evening and morning hours, thereby causing serious corrosion. Because of its relatively mild temperatures, the temperate zone is also the most heavily populated. Consequently the smoke, smog, ozone, and corrosive fumes associated with heavy industry are also found there.

2.9.8.3 Tropics. The greatest challenge to the aircraft and missile industries is to the design equipment that is protected from corrosion and deterioration in the heat and humidity of tropical climates. Even though they encompass only a small portion of the earth's land area, the tropics demand the greatest amount of consideration from the standpoint of corrosion treatment and control. Relative humidities of up to 100at ambient air temperatures of 85° F (29° C) and above create a formidable threat of corrosion. When high humidity and temperature conditions are combined with salt-laden air, the corrosive environment becomes extremely severe. The critical combination of high temperatures, condensation, high relative humidity, and contaminants such as salt and sand may cause catastrophic failure of equipment. Deterioration of the materials used in electronic equipment may also be accelerated.

2.9.9 Factors of Influence in Tropical Environments. Tropical environments are noted for long periods of heavy rainfall, during which 100 inches or more of rain may fall. Extended periods of high heat and humidity contribute to rapid corrosion of metals, cracking and flaking of rubber and plastic materials, and deterioration of seals. Equipment, whether stored or in use, requires special protective containers/measures and frequent preventive maintenance. Microorganisms multiply excessively in tropical environments and attack many non-metallic materials. Many items become covered with fungi in a matter of hours. Electronic equipment requires special efforts for effective operation in the tropics. Intensive preventive maintenance and the best possible protective techniques are necessary for aircraft, missiles, and their components in tropical environments.

2.9.10 Manufacturing. During the manufacture, assembly, or repair of aircraft, missiles, and their subsystems, many factors that might lead to corrosion may be introduced. The use of unsuitable materials and improper materials processing can cause corrosion. The shearing or hole-punching operations on some metal alloys, especially high strength aluminum, may introduce stresses that eventually lead to stress corrosion cracking. Assembly of parts in areas contaminated by fumes or vapors from adjacent operations may result in entrapment of the fumes or vapors in the equipment which

may cause future corrosion. Spaces that are air conditioned without humidity control may be sources of condensed moisture.

2.9.11 Storage. Even traces of corrosive vapors in packages containing aircraft or missile parts may result in serious corrosion. Moreover, the natural breathing of packages may introduce moisture into the parts and equipment. Some packing materials have been known to decompose and emit corrosive vapors during periods of prolonged storage. Refer to TO 1-1-17 and the system peculiar (-17) manual for additional storage information.

2.9.12 Shipment. During shipment, materials such as plastics and lubricants are often exposed to environments that were not considered during the design stage. Materials shipped by air are subjected to changes in atmospheric pressure and can lose volatile components by out-gassing. The vibration and mechanical shocks associated with shipment by truck can damage protective coatings or platings. Shipment by ocean vessel may expose the equipment to corrosive marine environments, vibrations and shock from engines or sea conditions, and residual corrosive vapors from previous shipments. Although packaging equipment in accordance with MIL-STD-2073-1 will protect the equipment from corrosive environments, packaging may be damaged during handling and thus become ineffective.

2.9.13 Industrial and Ship Emitted Air Pollutants. Smog, smoke, soot, and other airborne contaminants are extremely corrosive to exposed aircraft, missiles, and equipment. Many of the fumes and vapors emitted by ships and from factories can greatly accelerate metal corrosion. Industrial atmospheres may exist over large areas, since wind may carry these corrodents many miles from their source. Generally, air pollutants, when combined with water, create electrolytic solutions and accelerate corrosion.

2.9.14 Animal Damage. Damage to aircraft, missiles, and their subsystems may be caused by insects, birds, and various small animals, especially in tropical environments. Equipment in storage is most susceptible to this type of attack, since animals may enter through vent holes or tears in packaging and sometimes build nests. Moisture absorbed by nests plus excretions from animals may cause corrosion and deterioration that goes unnoticed until equipment is put into use and fails. Another type of damage may occur when organic materials, such as upholstery, are shredded for nests or consumed as food.

2.9.15 Micro-Organisms. Microbial attack includes the action of bacteria, fungi, or molds. Micro-organisms are nearly everywhere and outnumber all other types of living organisms. Organisms that cause the greatest corrosion problems are bacteria and fungi. Damage resulting from microbial growth can result from: (1) the tendency of the growth to hold moisture which then causes corrosion; (2) digestion of the substrate as food for the microorganism; or (3) corrosion of the surface beneath the growth by secreted corrosive fluids

2.9.15.1 Bacteria. Bacteria may be either aerobic or anaerobic. Aerobic bacteria require oxygen to live. They can accelerate corrosion by oxidizing sulfur to produce sulfuric acid or ammonia to produce nitric acid. Bacteria living on or adjacent to metals may promote corrosion either by depleting the oxygen supply or by releasing metabolic products. Anaerobic bacteria, on the other hand, can survive only when free oxygen is not present. The metabolism of these bacteria requires them to obtain food sources by oxidizing inorganic compounds such as iron, sulfur, hydrogen, and carbon monoxide. The resultant chemical reactions cause corrosion.

2.9.15.2 Microbial Growth Requirements. Fungi make up one class of microorganisms that feed on organic matter. Low humidity levels inhibit the growth of most species of fungi and bacteria. Ideal growth conditions for most fungi and bacteria are temperatures of +68° to +104° F (+20° to +40° C) and relative humidities of 85 to 100%. It was formerly believed that microbial attack could be prevented by applying moisture-proof coatings to nutrient materials or by drying the interiors of compartments with desiccants. However, some moisure-proof coatings are attacked by microorganisms, especially if the surface to which they are applied is contaminated. Some microorganisms can survive in spore form for long periods while dry, and can become active when moisture is available. When desiccants become saturated, they form what is known as a “desiccant pump” which pumps their absorbed moisture into the affected area by evaporation and allows microorganisms to begin to grow. Dirt, dust, and other airborne contaminants are the least recognized contributors to microbial attack. Unnoticed, small amounts of airborne debris may be sufficient to promote fungal growth by absorbing moisture.

2.9.15.3 Microbial Nutrients. Since fungi, bacteria, and other microorganisms are classified as living, it was previously thought that only materials derived from living organisms could provide them with food. Thus wool, cotton, feathers, leather, etc., were known to be microbial nutrients. To a large extent this rule of thumb is still valid, but the increasing complexity of synthetic materials makes it difficult, if not impossible, to determine from the name alone whether a material will support growth of microorganisms. Many otherwise resistant synthetic materials are rendered susceptible to microbial attack by the addition of chemicals, which change the properties of the material. In addition, different species of microorganisms have different growth requirements. The service life, size, shape, surface smoothness, cleanliness, environment, and species of microorganism involved all determine the degree of microbial attack on the affected item.

2.10 DEGRADATION OF NON-METALS.

Non-metallic materials (plastics, elastomers, paints, and adhesives) are not subject to electrochemical corrosion, since ions are not easily formed from non-metallic materials and their electrical conductivity is extremely low. The degradation of non-metals depends on the chemical makeup of the material and the nature of the environment. In 2-10. general, non-metallic materials on aircraft, missiles, and related equipment are selected for their obvious performance properties (flexibility, transparency, strength, electrical resistance, etc.) as well as their resistance to heat, impact, abrasion, ultraviolet radiation, moisture, ozone and other detrimental gases, and operational fluids such as hydraulic fluid, lube oil, cleaners, deicing fluids, etc. However, the use of unauthorized maintenance chemicals and procedures can accelerate degradation and ultimately lead to material failure resulting in leakage, corrosion, electrical shorts, crazing, and/or mechanical failure.

2.11 PREVENTIVE MAINTENANCE.

The two most important factors in preventing corrosion, and the only ones which can be controlled by field personnel, are the removal of the electrolyte and the application of protective coatings. Since the extent of corrosion depends on the length of time electrolytes are in contact with metals, corrosion can be minimized by frequent washing. If non-corrosive cleaners are used, the more frequently a surface is cleaned in a corrosive environment the less the possibility of corrosive attack. In addition, by maintaining chemical treatments, paint finishes, lubricants, and corrosion preventive compounds (CPC's) in good condition, corrosion can be minimized. The degradation of non-metallic materials can be minimized by avoiding the use of unauthorized maintenance chemicals and procedures. In addition, when repair or replacement of non-metallic materials is required, use only approved materials. Dedication to proper preventive maintenance practices maximizes equipment reliability.

CHAPTER 3
PREVENTIVE MAINTENANCE

SECTION I INTRODUCTION

3.1 PREVENTIVE MAINTENANCE PROGRAM.

As directed by AFI 21-105, the prevention and control of corrosion on aircraft missiles and related equipment is a command responsibility. Each command must place special emphasis on the importance of the corrosion control program and lend its full support to ensure that corrosion prevention and control receives sufficient priority to be accomplished along with other required maintenance.

3.1.1 Preventive Maintenance. Aluminum and magnesium alloys found in aviation equipment will corrode if salt deposits, other corrosive soils, or electrolytes are allowed to remain on their surfaces. To prevent corrosion, a constant cycle of cleaning, inspection, operational preservation, and lubrication must be followed. Prompt detection and removal of corrosion will limit the extent of damage to aircraft components. An effective preventive maintenance program requires all of the procedures specified in this chapter, but also includes corrosion removal, paint removal, surface treatment, sealing, and painting. A disciplined preventive maintenance program includes:

a. Regularly scheduled aircraft washing as specified in Table 3-1.

b. Regularly scheduled cleaning or wipe down of all exposed unpainted surfaces, such as landing gear struts and actuating rods of hydraulic cylinders with a compatible fluid or lubricant as specified by system peculiar technical orders.

c. Keeping low-point drains open.

d. Inspection, removal, and reapplication of corrosion preventive compounds (CPC's) on a scheduled basis.

e. Earliest detection and repair of damaged protective coatings.

f. Using only clean/fresh tap water with low chloride content for all aircraft, missile, and equipment washing and rinsing operations. Fresh water used for these wash and rinse operations shall meet the following requirements:

CAUTION

To prevent corrosive salt buildup in the water, water from recycling systems shall also meet these same quality standards. Recycled water shall be tested every 30 days to ensure compliance.

(1) Chloride content shall be 400 mg/L maximum (somewhat higher than EPA potable drinking water standard of 250 mg/L).

(2) pH shall be between 6.5 and 8.5.

(3) Total dissolved solids (TDS) content shall be 500 mg/L maximum.

(4) Total suspended solids (TSS) content shall be 5 mg/L maximum.

(5) The Langlier Saturation Index shall be slightly above 0.

(6) The biological oxygen demand (BOD) concentration shall be 5 mg/L maximum.

(7) Adequate disinfection of the water shall be provided to control the growth of microorganisms in the water.

(8) The water hardness shall be between 75 and 150 mg/L as CaCO3.

(9) The total petroleum hydrocarbon (TPH) content shall be 10 mg/L maximum.

g. Using padded panel racks to store panels/parts for aircraft and equipment during maintenance; using protective measures to prevent abrasions/scratches resulting from placement of parts, tools, tool boxes, etc. on wings, fuselage or other aircraft surfaces. Aircraft Wash Intervals

Table 3-1. Aircraft Wash Intervals

Air Base Name and Location	Wash Interval By Severity		
	Severe (30 Days)	Moderate (90 Days)	Mild (120 Day)
Aj Taif, SA			X
Al Jouf, SA			X
Allen C. Thompson Fld.; Jackson, MS			X
Altus AFB, OK			X
As Sulayyil, SA			X
Anderson AFB, GU	X		
Anchorage IAP, AK			X
Andrews AFB, MD (Wash. DC)			X
Atlantic City, NJ			X
Aviano AB, IT			X
Bagram AB, Afganistan		X	
Bahrain	X		
Bangor IAP, ME			X
Barksdale AFB; Shreveport, LA			X
Barnes M. Apt.; Westfield, MA			X
Battle Creek, MI			X
Beale AFB; Marysville, CA			X
Birmingham Apt., AL			X
Boise Air Term., ID (ANG)			X
Bradley IAP; Windsor Locks, CT			X
Brindisi/Casale AB, IT	X		
Buckley ANGB; Denver, CO			X
Burlligton IAP, VT			X
Byrd Fld.; Richmond,VA			X
Cannon AFB; Clovis, NM			X
Capital Mun. Apt.; Springfield, IL			X
Channel Island; Port Hueneme NAS, CA	X		
Cheyenne Apt. WY			X
Charleston AFB, SC			X
Charleston Apt. , WV			X
Columbus AFB, MS			X
Cyprus International Airport	X		
Danelly Fld.; Montgomery, AL			X
Davis-Monthan AFB; Tucson, AZ			X
Des Moines IAP, IA			X
Dhahran, SA			X
Diego Garcia	X		
Dobbins AFRB; Marietta, GA		X	
Douglas IAP; Charlotte, NC			X
Dover AFB, DE			X
Duluth IAP, MN			X
Dyess AFB; Abilene, TX			X
Eareckson (Shemya) AFB, Aleutian Is., AK	X		
East. WV Reg. Apt; Martinsburg, WV			X
Edwards AFB; Rosamond, CA			X
Eglin AFB; Valparaiso, FL	X		

Table 3-1. Aircraft Wash Intervals - Continued

Air Base Name and Location	Wash Interval By Severity		
	Severe (30 Days)	Moderate (90 Days)	Mild (120 Day)
Eglin AFB (Aux Fld. #3), FL			X
Eielson AFB, AK			X
Ellington Fld.; Houston, TX			X
Ellsworth AFB; Rapid City, SD			X
Elmendorf AFB; Anchorage, AK			X
Fairchild AFB; Spokane, WA			X
Fairford, UK			X
Falcon AFB, CO			X
Forbes Fld., KS			X
Fort Smith Mun. Apt., AR			X
Fort Wayne Apt., IN			X
Francis E. Warren AFB; Cheyenne, WY			X
Fresno Air Term., CA			X
Geilenkhirchen, GE		X	
Gen. Mitchell IAP; Milwaukee, WI			X
Grand Forks AFB; Emarado, ND			X
Great Falls IAP, MT			X
Greater Peoria Apt.; IL			X
Griffiss AFB; Rome, NY			X
Grissom ARB; Peru, IN			X
Hancock IAP; Syracuse, NY			X
Hanscomb AFB; Bedford, MA			X
Harrisburg IAP, PA			X
Hector IAP; Fargo, ND			X
Hickam AFB; Honolulu, HI	X		
Hill AFB; Ogden, UT			X
Holloman AFB; Alamogordo, NM			X
Homestead ARB, FL			X
Howard AB; Panama		X	
Hulman Reg. Apt., IN			X
Hurlburt Fld.; Fort Walton Beach, FL	X		
Incirlick AB, Turkey		X	
Istres AB, France		X	
Jacksonville IAP, FL			X
Jeddah, SA			X
Joe Foss Fld.; Sioux Falls, SD			X
Kadena AB, Japan	X		
Keesler AFB; Biloxi, MS	X		
Kelly AFB; San Antonio, TX			X
Key Fld.; Meridian, MS			X
Khamis Mushay, SA		X	
King Khalid, SA			X
Kingsley Fld.; Klamoth Falls IAP, OR			X
Kirtland AFB, NM; Albuquerque, NM			X
Kunsan AB; S. Korea	X		
Lajes Fld.; Azores, Portugal	X		

Table 3-1. Aircraft Wash Intervals - Continued

Air Base Name and Location	Wash Interval By Severity		
	Severe (30 Days)	Moderate (90 Days)	Mild (120 Day)
Lambert Fld., St. Louis IAP, MO			X
Langley AFB; Hampton, VA	X		
Larnaka International Apt. , Cyprus	X		
Laughlin AFB; Del Rio, TX			X
Lincoln Mun. Apt., NE			X
Little Rock AFB, AR			X
Luke AFB; Glendale, AZ			X
MacDill AFB; Tampa, FL	X		
Malmstrom AFB; Great Falls, MT			X
Mansfield Lahm Apt., OH			X
March ARB; Riverside, CA			X
Martin St. Apt.; Baltimore, MD			X
Maxwell AFB; Montgomery, AL			X
McChord AFB; Tacoma, WA			X
McClellan AFB; Sacramento, CA			X
McConnell AFB, Wichita, KS			X
McEntire ANGB; Columbia, SC			X
McGhee Tyson Apt.; Alcoa, TN			X
McGuire AFB; Wrightstown, NJ			X
Memphis IAP, TN			X
Minot AFB, ND			X
Minn.-St. Paul IAP, MN			X
Misawa AB, Japan		X	
Moffett Fld., CA			X
Moody AFB; Valdosta, GA			X
Mountain Home AFB; Boise, ID			X
NAS Fort Worth, TX			X
NAS Keflavic, Iceland	X		
NAS New Orleans, LA			X
NAS Sigonella; Sicily, Italy	X		
NAS Souda Bay (Chania Apt.), Crete	X		
Nashville Met. Apt., TN			X
Nellis AFB; Las Vegas, NV			X
Newburgh Apt. NY			X
New Castle Co. Apt.; Wilmington, DE			X
Niagra Falls IAP, NY			X
Offutt AFB; Omaha, NE			X
O'Hare IAP; Chicago, IL			X
Osan AB; S. Korea		X	
Otis ANGB; Falmouth, MA			X
Patrick AFB; Cocoa Beach, Fl,	X		
Pease ANGB; Portsmouth, NH		X	
Peterson AFB; Colorado Springs, CO			X
Pittsburgh IAP, PA			X
Pope AFB; Fayetteville, NC			X
Portland IAP, OR			X

Table 3-1. Aircraft Wash Intervals - Continued

Air Base Name and Location	Wash Interval By Severity		
	Severe (30 Days)	Moderate (90 Days)	Mild (120 Day)
Prince Sultan AB, Al Kharj, SA			X
Puerto Rico IAP/Muniz ANGB; San Juan, PR	X		
Quonset St. Apt; Providence, RI	X		
RAF Akrotiri, Cyprus	X		
RAF Lakenheath, UK		X	
RAF Mildenhall, UK		X	
Ramstein AB, GE X			X
Randolph AFB; San Antonio, TX			X
Reese AFB; Lubbock, TX			X
Reno/ Tahoe IAP, NV			X
Rhein-Main, GE	X		
Richhards-Gebauer AFRB, MO			X
Rickenbacker IAP; Columbus, OH			X
Riyadh, SA			X
Robins AFB; Warner Robins, GA			X
Rosecrans Mem. Apt.; St. Joseph, MO			X
Salt Lake City IAP, UT			X
Schenectady Co. Apt. NY			X
Scott AFB; Belleville, IL			X
Selfridge ANGB; Mount Clemens, MI			X
Seymour Johnson AFB; Goldsboro, NC			X
Shaw AFB; Sumter, SC			X
Sheppard AFB; Wichita Falls, TX			X
Sioux Gateway Apt.; Sioux City, IA			X
Souda Bay, Crete	X		
Sky Harbor Apt.; Pheonix, AZ			X
Spangdalhem AB, GE			X
Springfield-Bleckley Mun. Apt., OH			X
Standiford Fld./Lvle. IAP; Louisville, KY			X
Suffolk Co. Apt., NY	X		
Tabuk, SA			X
Taegu, S. Korea			X
Tinker AFB; Oklahoma City, OK			X
Toledo Exp. Apt.; Swanton, OH			X
Travis AFB; Fairfield, CA			X
Travis Fld.; Savannah, GA		X	
Truax Fld./Dane City Reg. Apt; Madison, WI			X
Tucson IAP, AZ			X
Tulsa IAP, OK			X
Tyndall AFB; Panama City, FL	X		
Vance AFB; Enid, OK			X
Vandenburg AFB; Lompoc, CA			X
Westover AFB; Chicopee, MA			X
Whiteman AFB; Knobnoster, MO			X
Willow Grove ARS; Philadelphia, PA			X
Will Rogers IAP; Oklahoma City, OK			X

Table 3-1. Aircraft Wash Intervals - Continued

Air Base Name and Location	Wash Interval By Severity		
	Severe (30 Days)	Moderate (90 Days)	Mild (120 Day)
Wright-Patterson AFB; Dayton, OH			X
Yeager Apt.; Charleston, WV			X
Yokota AB, Japan			X
Youngstown-Warren Reg. Apt. ARS, OH			X

SECTION II CLEANING

3.2 INTRODUCTION.

CAUTION

- Authorized cleaning agents and equipment are listed in this Chapter and Appendixes A and B. Order materials and equipment by NSN from the lists in these appendixes through regular supply channels, or local purchase from venders listed on the most current QPL of a specification or by vender part number listed in these appendixes for an authorized non-specification material.
- Specification QPL's are the responsibility of the authority for the specification. For information access, many cleaning and corrosion prevention and control process related specifications having a QPL are available, with their most current revision, from the AFCPCO, AFRL/MLS-OLR, web site: https://afcpco.robins.af.mil or the Defense Technical Information Center (DTIC) Scientific and Technical Information Network web site: http://stinet.dtic.mil.
- Do not use unauthorized cleaners. Although other commercial cleaners may appear to perform as well as, or better than, approved products, these materials may be corrosive to metal alloys used in aircraft, missiles, and related equipment. They can also accelerate degradation of non-metallic materials causing material failures, which may result in fluid leakage, corrosion of surrounding metals, electrical shorts, crazing, and/or mechanical failure.

NOTE

Ozone depleting substances (ODS) are solvents such as, but not limited to, 1,1,1 trichloroethane (MIL-T-81533) and trichlorotrifluoroethane (MIL-C-81302). These solvents, as well as products containing them, are still used in some aircraft maintenance processes, including oxygen systems cleaning and some avionics cleaning. Alternate materials continue to be identified. Wherever possible, specifications are being changed to eliminate their use automatically. Some products that have been reformulated are now flammable. Pay close attention to all CAUTION/WARNING labels on solvents and solvent-based products.

3.2.1 Reasons for Cleaning. Aircraft cleaning is the first step in preventing aircraft corrosion. Cleaning requires a knowledge of the materials and methods needed to remove corrosive contaminants and fluids, which tend to retain contaminants. Clean aircraft, missiles, and related equipment regularly in order to:

a. Prevent corrosion by removing salt deposits, other corrosive soils, and electrolytes.

b. Maintain visibility through canopies and windows.

c. Allow a thorough inspection for corrosion damage; aircraft washing before Isochronal (ISO)/ Phase inspections is strongly recommended to facilitate corrosion inspections.

d. Maintain turbine engine efficiency.

e. Reduce fire hazards by the removal of accumulations of leaking fluids.

f. Improve overall appearance.

g. Ensure aerodynamic efficiency of the aircraft.

h. Maintain paint scheme characteristics.

3.2.2 When to Accomplish Work. Accomplish cleaning and related treatments at the frequency prescribed in this Section, or more frequently if inspection indicates the need. Inspect areas of missiles not protected from the elements (e.g. rain, dust, snow, etc.) daily. The Aircraft System Program Director (SPD) in conjunction with the Using Command and the Air Force Corrosion Prevention and Control Office (AFCPCO) shall establish aircraft wash cycle requirements. The Unit Commander shall establish a definite schedule for inspection, cleaning, and corrosion treatment of the unit's assigned aircraft, missiles, and equipment, and may at his/her discretion direct a wash cycle that is more frequent (not less frequent) than the established aircraft wash cycle to promote the professional appearance of assigned aircraft, missiles, and equipment.

3.2.2.1 Cleaning Frequency. The frequency of inspection, cleaning, and related corrosion treatment depends on the type of systems assigned as well as the existing local environmental and other conditions. Table 3-1 specifies the required aircraft/weapon system wash interval by base or location as dictated by existing, recorded environmental and pollution data at each base and/or location unless a shorter one is specified in a system peculiar technical order. Under certain local conditions, depending on aircraft type and usage, the established wash cycle may be insufficient. Some types of aircraft, missiles, and related equipment may require more frequent cleaning of affected areas when:

a. Excessive exhaust or gun blast soil and exhaust gases accumulate within impingement areas.

b. Paint is peeling, flaking, or softening.

c. Fluid leakage (coolant, hydraulic fluid, oil, etc.) occurs.

d. Exposure to salt spray, salt water, or other corrosive materials occurs.

3.2.3 Aircraft Clear Water Rinse Requirements. Aircraft exposed to a salt-water environment require clear water rinse (CWR). Specific rinse requirements are as follows:

3.2.3.1 All aircraft stationed at bases located within 1.25 mi (2 km) of salt water shall be CWR'd at least once every 15 days unless washed first. Aircraft flown at low level (under 3000 ft) or making two or more take-offs and/or landings, including touch-and-go landings, over salt water require a CWR after the last flight of the day.

3.2.3.2 All aircraft deployed to a location within 1.25 mi (2 km) of salt water for 10 days or more have the same CWR requirements as if stationed there. When mission requirements and/or facility limitations prevent accomplishment of clear water rinsing at the deployed location, make an entry in the aircraft forms to require a clear water rinse be performed within 3 days after return to home station. If an aircraft is deployed for 30 days or more at a location where it cannot be clear water rinsed, it shall be washed within 5 days after returning to home station.

NOTE

When extremely unique operational requirements or facility limitations severely impact a unit's ability to CWR daily, this requirement may be temporarily waived by the MAJCOM Corrosion Program Manager in conjunction with the Aircraft System Program Director (SPD) who has the final approval authority. The MAJCOM Corrosion Program Manager must forward a copy of the waiver to the Air Force Corrosion Prevention and Control Office (AFCPCO). Each waiver is valid for a period not to exceed one year.

3.2.3.3 Any aircraft (primarily transient aircraft) performing only a single take-off and/or landing requiring low-level flight over salt water in a single day are excluded from clear water rinsing unless this occurs ten or more times within a 30 day period. After the tenth occurrence, an entry shall be made in the aircraft forms to require a clear water rinse within five days after returning to home station.

3.2.3.4 Bases that must routinely CWR their assigned aircraft due to low-level flights over salt water may adopt, at their option, a 15 day CWR program for all their assigned aircraft in lieu of the routine daily rinsing of flyers. This option shall not be granted for aircraft on bases located within 1.25 mi (2 km) of salt water or those involved in search, rescue, and recovery missions or any other special operations over salt water. Approval of a 15 day CWR program must be requested from the Air Force Corrosion Prevention and Control Office (AFCPCO) through the MAJCOM Corrosion Program Manager. Bases approved for a 15 day CWR program shall ensure their Plans and Scheduling Office enters a special inspection requirement into their maintenance data collection system so that the CWR program is tracked as scheduled maintenance and not just entered into the aircraft AFTO 781K Forms as unscheduled maintenance.

NOTE

Optimum use of taxi-through rinse facilities is recommended for removal of salt contamination and light deposits when operating near salt water. CWR does not satisfy aircraft washing requirements as it only removes readily water-soluble matter from aircraft exterior surfaces.

3.2.4 Immediate Cleaning. These affected areas and soils must be cleaned immediately:

a. Spilled electrolyte and corrosive deposits found around battery terminals and battery area shall be cleaned, neutralized, and treated. Close attention and regular cleaning is required for battery areas of aircraft, missiles, and equipment.

b. Areas of aircraft, missiles, and equipment ex posed to corrosive fire extinguishing materials shall be cleaned within 4 hours after application if at all possible. If an aircraft, missile, or piece of equipment is impounded by an Accident Investigation Board, the board shall consider the corrosive effect of fire fighting materials and direct their removal as soon as possible consistent with the accident investigation. Prompt removal of these materials saves considerable labor hours and materials when salvaging and restoring equipment to a serviceable status (Refer to Chapter 8 for instructions).

c. Salt deposits, relief tube waste, or other contaminants.

d. Aircraft, missiles, or equipment exposed to significant amounts of salt water. If shipped or transported via ship over salt water, they shall be cleaned and given any necessary treatment after receipt, particularly if the preservation and/or packaging are damaged.

e. Fungus growth.

f. Chemical, biological, or radiological (CBR) contaminants. Procedures for CBR decontamination of aircraft, missiles, and equipment are contained in the 00-110-Series technical orders.

g. Spills of corrosive chemicals. An entry in the aircraft AFTO 781A Form shall be made for all corrosive

chemical spills, and the chemicals shall be neutralized in accordance with procedures in AFM 71-4.

3.3 CLEANING COMPOUNDS.

Cleaning compounds work by dissolving soluble soils, emulsifying oily soils, and suspending solid soils. There are several types of cleaning compounds, each of which cleans a surface using one or more of these mechanisms.

3.3.1 Alkaline Cleaners.

CAUTION

When high strength steels (typically 180 KSI and above), some high strength aluminum, and some stainless steels are exposed to acid paint removers, plating solutions, other acidic materials (cleaners, etc.), and even some alkaline materials, a cathodic reaction on the metal surface produces hydrogen. The hydrogen diffuses into the bulk metal, accumulating at grain boundaries and weakens the structure. If the part is under load or contains residual manufacturing stresses, sudden catastrophic failure known as hydrogen embrittlement occurs when the part can no longer sustain the internal and/or applied stresses. Hydrogen embrittlement has been known to occur in parts stressed to only 15% of the nominal tensile strength of the metal.

Many alkaline cleaners are not authorized for cleaning of Air Force aircraft, missiles, and related equipment because they are incompatible with the polyimide insulation on the electrical wiring used on many aircraft, missiles, and related equipment. Cleaning compounds conforming to MIL-PRF-87937 and MIL-PRF-85570 and that are listed on the QPL for each specification have been tested and proven compatible with polyimide insulation. Types I, II, and IV of MIL-PRF-87937 and Types I and II of MIL-PRF-85570 all contain detergents and foaming agents and work the same way as any detergent solution. Type I cleaners of both specifications contain solvents and are more effective for removal of heavy oils and greases such as wire rope lubricant, but they cannot be used in poorly ventilated areas due to their solvent content. Types II and IV of MIL-PRF-87937 and Type II of MIL-PRF-85570 are all good general cleaners for removal of dirt, grime, light oils, and hydraulic fluid; and they are usable in confined areas such as cockpits, cabins, bilges, and equipment bays as they contain no solvents.

3.3.1.1 MIL-PRF-87937, Type I (terpene solvent based) and MIL-PRF-85570, Type I (aromatic solvent based) cleaners are water dilutable and biodegradable materials, and are very good general cleaners for washing aircraft, missiles, components, and support equipment. However, since they contain solvents, environmental and waste disposal factors need to be considered prior to use. Since MIL-PRF-87937, Type I materials contain terpenes which are potentially corrosive if entrapped and not completely removed, their use may be restricted on some weapon systems in specific applications. Always consult weapon system specific -23 TO's for precautions and/or restrictions on use of this class of materials. These cleaners may be used as alternates for MIL-PRF-87937, Types II and IV, and MIL-PRF-85570, Type II materials. MIL-PRF-87937, Type I cleaners are approved for use on support equipment (SE) per TO 35-1-3, and aircraft wheels per TO 4W-1-61.

3.3.1.2 MIL-PRF-87937, Types II and IV, and MIL-PRF-85570, Type II cleaners are water dilutable and biodegradable materials, and are the primary cleaners for washing the exterior of aircraft, missiles, engines, and support equipment (SE). They are excellent materials for removing light to medium soils (greases, oils, grime, etc.) from almost all surfaces. Since they contain no solvents, their use is not limited; except that approval by the aircraft SPD is required prior to use on transparent plastic aircraft canopies, windows, and windshields/windscreens. Depending on the type of soils involved, these cleaners may be used in various dilutions as substitutes for solvents in hand wipe cleaning of greasy and oily areas. Apply them from a pump spray bottle followed by drying with a clean, lint free cloth. When applied from a pump spray bottle at the most dilute mixture recommended, these are excellent cleaners for lightly soiled surfaces in aircraft cabins and cockpits such as non-transparent plastic parts and instrument glass covers.

3.3.1.3 MIL-PRF-87937, Type III and MIL-PRF-85570, Type V are gel type cleaners intended for full strength application with no dilution in areas requiring special cleaning, such as aircraft wheel wells, control surface wells, and wing butts. They contain small amounts of solvents, detergents, and thickening agents, which make them cling very well to vertical and overhead surfaces. These cleaners are very effective in emulsifying and/or cleaning heavy deposits of hydraulic fluids, oils, greases, and carbon. In areas where complete rinsing with water can be tolerated, they may be used as direct replacements for solvent cleaners such as MIL-C-43616, MIL-PRF-680, and A-A-59601. To be most effective, these materials are applied full strength with no pre-rinsing of the surface, allowed to dwell 5 to 15 minutes, agitated with a non-metallic bristle brush, and then rinsed thoroughly with tap water. These cleaners are not intended for and shall not be used on transparent plastic aircraft canopies, windows, and windshields/windscreens.

3.3.1.4 MIL-PRF-87937, Type IV is also an excellent heavy duty, water dilutable, solventless cleaner intended for removal of light to heavy deposits of greases, oils, hydraulic fluids, and carbon from aircraft, missile, and other equipment surfaces. It is not intended for and shall not be used on transparent plastic aircraft canopies and windows.

3.3.1.5 MIL-PRF-85570, Type IV is a cleaner that contains solvents, detergents, and suspended rubber particles and is intended for removal of exhaust gas and gun gas residues, smudges, boot marks, and other embedded soils from aircraft, missiles, and other equipment with flat (low gloss)/camou-

flage coating systems. When rubbed across a soiled surface, the rubber particles in the cleaner mechanically entrap the soils like tiny erasers without polishing the surface of the coating system and increasing its gloss.

NOTE

Solvents used in MIL-PRF-85570, Type IV cleaners may be hazardous air pollutants (HAP's). Consult with bioenvironmental engineering before using this cleaner. MIL- PRF-87937, Types III and IV or MIL-PRF- 85570, Type V may be used as alternates.

3.3.1.6 MIL-PRF-85570, Type III is a cleaner that contains detergents and fine abrasive particles and is intended for removal of exhaust gas and gun blast residues from aircraft with a high gloss coating system. When rubbed across a soiled surface, the abrasive particles mechanically remove the soils which are then suspended in the detergent while producing only a very minimal dulling of the high gloss coating system.

3.3.2 Solvent Emulsion and Aqueous Cleaners for Turbine Engine Gas Path and General Area Cleaning. MIL-PRF-85704, Types I, II, and III materials are solvent emulsion (Types I and II) and aqueous (Type III) cleaners intended for cleaning the internal areas or gas path of aircraft turbine engines. MIL-C-43616, Classes 1 and 1A materials are solvent emulsion cleaners intended for general cleaning of heavily soiled exterior areas of aircraft, missiles, and other equipment. Use only those materials listed on the QPL's for MIL-PRF-85704 and MIL-C-43616.

3.3.2.1 MIL-PRF-85704, Type I (solvent emulsion with aromatic hydrocarbons) and Type II (aqueous with some non-aromatic hydrocarbons) are materials intended for cleaning the interior of an aircraft engine by spraying the cleaner into the intake while the starter is motoring the engine. There is a Type II, RTU (ready-to-use) material that requires no dilution before use, but the bulk form of Type II and Type I must be diluted with water having a maximum conductivity of 10 micro-mho/centimeter and a pH in the 5.0 to 8.0 range before use. Type III (bulk, same water dilution requirements) and Type III RTU (ready-to-use with no dilution) are aqueous materials with no hydrocarbon solvents intended for cleaning the interior of an aircraft engine by spraying the cleaner into the intake while the engine is on line or running per specific engine maintenance instructions. These cleaners work very well for removal of accumulated salts, dirt, and oily soils from the compressor section and other areas of the gas path of aircraft engines, and their use is followed by spraying fresh tap water through the engine to rinse away the contaminants.

3.3.2.2 MIL-C-43616, Class 1 (bulk- requires dilution with tap water) and Class 1A (aerosol- ready-to-use with no dilution) are solvent emulsion cleaners and are very effective for removal of oily and greasy soils from general exterior painted (polyurethane only) and unpainted areas of aircraft, missiles, and other equipment. The Class 1A aerosol materials are excellent spot cleaners for removal of oily and greasy soils.

NOTE

- MIL-PRF-85704 materials are specially formulated to minimize corrosion of aircraft turbine engines. Other types of cleaners shall not be used to clean engine interior areas without specific approval by the engine SPM and/or as required by the system peculiar engine maintenance TO The system peculiar engine maintenance TO shall be consulted for interior cleaning procedures and the requirement/authorization to use MIL-PRF-85704 cleaners.
- MIL-C-43616 solvent emulsion cleaners shall not be used on non-polyurethane paint systems and markings as their high solvent content can cause them to fade and/or streak. These cleaners also leave a very thin oil and/or solvent film on the surface, so they are not suitable for use as a final cleaner prior to painting, sealing, or adhesive bonding.
- Large scale use of bulk solvent emulsion cleaners may cause problems for waste water treatment facilities. Local air pollution regulations may restrict the amount and application methods of solvent emulsion cleaners. If so, use MIL-PRF-85704, Type II, RTU in lieu of the Type I and the appropriate type of MIL-PRF-87937 or MIL-PRF-85570 in lieu of MIL-C-43616, Class 1 or 1A.

3.3.3 Aqueous Parts Washer Cleaning Solutions. Materials conforming to and listed on the QPL for MIL-C-29602, Type I (liquid concentrate) and Type II (powder) Cleaning Compounds for Parts Washers and Spray Cabinets, either diluted with water (Type I) or dissolved in water (Type II) in accordance with manufacturer's instructions are the cleaning agents to be used in high pressure cabinet style parts washers for removing oils and greases from disassembled components. They are not to be used for bearings unless authorized by system peculiar technical data. Due to their maximum allowable pH of 13.5, MIL-C-29602 cleaning solutions can attack/corrode aluminum alloys. Aircraft SPD and/or equipment SPM engineering authority approval is required before cleaning aluminum alloy parts. In addition, many heated MIL-C-29602 solutions can attack the IVD Aluminum coating used on many high strength steel components and generate hydrogen, which can enter into the steel and cause a catastrophic failure by hydrogen embrittlement. This is of particular concern for IVD Aluminum coated high strength steel aircraft landing gear (LG) components. These LG components shall be cleaned in aqueous parts washers

using only those materials listed on the most current revision of AF Drawing No. 9825019 by the Landing Gear SPM, OO-ALC/LGHLE.

3.3.4 Solvents. Cleaning solvents dissolve oily and greasy soils so that they can be easily wiped away or absorbed on a cloth. However, solvents differ significantly in their cleaning ability, toxicity, evaporation rate, effect on paint, and flammability. A-A-59601, Type II and/or MIL-PRF-680, Type II are the most common cleaning solvents used on aircraft, due to their low toxicity, minimal effect on paint, and relative safety. Other solvents such as alcohols, ketones, chlorinated solvents, and naphtha, are specialized materials restricted for use, as recommended in Table 3-2.

NOTE

- Solvent cleaning operations are becoming more and more limited due to environmental regulations. Determine local requirements regarding limitations on type and volume used and disposal from your work center supervisor, safety officer, and/or bioenvironmental engineer.
- A-A-59601 Dry Cleaning and Degreasing Solvent PD680 and MIL-PRF-680 Degreasing Solvent, replace P-D-680 Dry Cleaning and Degreasing Solvent. MIL-PRF-680 has been reformulated to reduce Hazardous Air Pollutants by reducing the aromatic content of the solvent, while A-A-59601 is identical to P-D-680.

3.3.4.1 MIL-PRF-680 Degreasing Solvent, and A-A-59601 Dry Cleaning and Degreasing Solvent, PD680. These solvents are used as cleaners and degreasers for painted and unpainted metal parts and to remove corrosion preventive compounds. The solvents are available in several types. Although the degreasing effectiveness is approximately the same, the flash points differ as follows: Type I, both specifications, 100° F (38° C) minimum; Type II, both specifications, 140° F (60° C) minimum; Type III, both specifications, 200° F (93° C) minimum, Type IV (d-limonene additive), MIL-PRF-680 only, 140° F (60° C) minimum. Though the flash points differ, all types will burn intensely once ignited. Type I, both specifications, is not authorized as a general cleaner due to its flammability, but may be used in parts washers designed for such solvents. Type II, both specifications, is the most common cleaning solvent used on aircraft, missiles, and equipment because of its higher flash point. If necessary, ASTM D 235, Type II, Class C, Mineral Spirits may be used as a substitute for MIL-PRF-680 or A-A-59601, Type II. Type III, both specifications, is intended for use in confined spaces and in locations with environmental constraints where a solvent with a very low vapor pressure (evaporation rate) and a very high flash point is required. MIL-PRF-680, Type IV (d-limonene additive) may be used where a higher flash point and strong solvency is desired if approved by the aircraft SPD or the missile or equipment SPM. The dwell time for all types should be held to a minimum (less than 15 minutes) to avoid damage to paint.

3.3.4.2 TT-I-735 Isopropyl Alcohol. Isopropyl alcohol is a flammable solvent used primarily as a disinfectant for cleaning fungus and mold. It is a poor degreaser.

3.3.4.3 ASTM D 740 Methyl Ethyl Ketone (MEK). This is a highly flammable solvent used primarily for cleaning prior to painting and bonding. It may also be used for cleaning if surfaces become contaminated with leaking oils and/or hydraulic fluids after surface treatment. Most locations cannot use MEK due to environmental restrictions on use of solvents with vapor pressures greater than 44 millimeters of mercury (mm Hg). MIL-PRF-87937, Type II or MIL-PRF-85570, Type II (either-diluted 1 part cleaner to 9 parts water), may be used as an alternate followed by rinsing thoroughly with fresh water and air drying; or surfaces may be cleaned by solvent wiping with AMS 3166, Solvents, Cleaning, Cleaning Prior to Application of Sealing Compounds.

3.3.4.4 Aliphatic Naphtha. Aliphatic naphtha is a highly flammable solvent used primarily for cleaning oily or greasy deposits from acrylic canopy materials. Other solvents cause crazing of acrylics. It can also be used to remove masking or preservation tape residue.

3.3.4.5 MIL-T-81772, Type I (Polyurethane), and Type II (Epoxy) Thinner. Both of these thinners are highly flammable solvents that can be used for prepaint solvent cleaning when necessary at locations requiring a solvent vapor pressure less than 45 mm Hg.

3.3.5 Miscellaneous Cleaning Agents. Some other cleaning materials used on aircraft, missiles, and equipment are listed here. P-P-560 plastic polish containing a mild abrasive is used to polish out scratches in acrylic canopy and window materials. Some alkaline chemicals used to neutralize specific acidic soils are: A-A-59370 ammonium hydroxide for urine, and ASTM D 928 sodium bicarbonate for electrolyte spills from sulfuric acid batteries. Some acidic chemicals used to neutralize specific alkaline soils are: ANSI/AWWA B 504 monobasic sodium phosphate and A-A-59282 boric acid for electrolyte spills from nickel-cadmium batteries. MIL-F-24385 AFFF fire extinguishing agent containing wetting and foaming agents can be used to wash out residues from fire extinguishing solutions made with salt water. A-A-59199 optical glass lens cleaner is used for cleaning optical lenses on aircraft, missiles, and equipment. Solutions of O-D-1435 and A-A-1048 disinfectants are used to sanitize and deoderize relief tube areas; latrine areas including toilet bowls, urinals, and latrine buckets; garbage receptacles; sinks; galley areas; and other interior areas of aircraft and equipment requiring disinfection. SAE AMS 1453 disinfectant is a ready-to-use material that can be used

as a general disinfectant cleaner for aircraft and equipment interior surfaces requiring disinfection.

3.3.6 Steam Cleaning. Steam cleaning shall not be used on aircraft and missiles at all levels (Organizational/Unit, Intermediate, or Depot) of maintenance. In addition, steam cleaning shall not be used on the following items on equipment and components removed from aircraft and missiles: honeycomb bonded structure, sealant, fiberglass composites, acrylic windows and canopies, or electrical wiring. Steam cleaning erodes paint, crazes plastics, disbonds adhesives, damages electrical insulation, and drives lubrication out of bearings.

3.3.7 Dilution. More concentrated solutions than those recommended do not clean any better and are wasteful; MORE IS NOT ALWAYS BETTER. In fact, if too much cleaner is used, the solution merely becomes slippery film, preventing the washing pad from loosening the soil and making rinsing more difficult. Do not exceed the cleaner dilution ratios recommended in Table 3-2.

Table 3-2. Cleaning of Specific Areas and Components

Area or Component	Type of Soil	Cleaning Agent or Compound	Mixing Directions and Nomenclature	Cleaning Procedures
NOTE • Cleaning procedures are listed in this table. Ordering information for approved materials can be found in Appendix A. Ordering information for approved equipment can be found in Appendix B. • Use of hot water (120° to 140° F/49° to 60° C) for rinsing during aircraft washing operations is strongly recommended as it provides much more efficient rinsing and is known to reduce man-hours for aircraft washing operations by approximately 20%.				
	WARNING • A-A-59601 Dry Cleaning and Degreasing Solvent, PD680 and MIL-PRF-680 Degreasing Solvent are combustible. Keep away from open flames. Use in a well-ventilated area. Wear rubber gloves and chemical or splash proof goggles. Avoid skin contact. Consult the local safety office regarding respiratory protection. • Wear rubber gloves, chemical or splash proof goggles, and water resistant boots during cleaning operations using MIL-PRF-87937 and MIL-PRF-85570 cleaning compounds. If cleaner is splashed in eyes, rinse thoroughly with fresh water for 15 minutes and report to medical facility. Remove clothing saturated with cleaning solution immediately and flush exposed skin areas with fresh water.			
EXTERIOR SURFACES, PAINTED	Light Soils (dirt, dust, mud, salt, loose soot)	MIL-PRF-87937, Type II or IV or MIL-PRF-85570, Type II or	1 part cleaner in 9 parts water	Apply cleaner solution with foam generator, spray, sponge, soft brush, or cloth. Scrub and then rinse with fresh water and dry. MIL-PRF-87937, Type I materials contain terpenes. Aircraft SPD and/or missile or equipment SPM restrictions may apply. Consult system peculiar maintenance manuals.
		MIL-PRF-87937 or MIL-PRF-85570, Type I	1 part cleaner in 16 parts water	

Table 3-2. Cleaning of Specific Areas and Components - Continued

Area or Component	Type of Soil	Cleaning Agent or Compound	Mixing Directions and Nomenclature	Cleaning Procedures
	Moderate Soils (hydraulic fluids, lube soils, light preservatives)	MIL-PRF-87937 Type II or IV, or MIL-PRF-85570, Type II or MIL-PRF-87937 or MIL-PRF-85570, Type I	1 part cleaner in 4 parts water 1 part cleaner in 9 parts water	Apply cleaner solution with foam generator spray, sponge, soft brush, or cloth. Rub gently with a circular motion for up to one minute. Rinse with fresh water and dry. Use of MIL-PRF-87937, Type I is subject to restrictions noted above.
	Heavy Soils (carbonized oil, aged preservatives, grease, gun blast and exhaust deposits)	MIL-PRF-87937, Type III or MIL-PRF-85570, Type V or	Undiluted	Spray or brush on cleaner. After 5 to 15 minutes, brush and rinse thoroughly.
EXTERIOR SURFACES, PAINTED - Cont.		A-A-59601 or MIL-PRF-680, Type II and CCC-C-440, Type II or III, Class 1 or A-A-2522, Grade A or AMS 3819, Class 1, Grade A and MIL-PRF-87937 or MIL-PRF-85570, Type I or MIL-PRF-87937, Type IV or MIL-PRF-85570, Type II	Degreasing Solvent Undiluted Cotton Cheesecloth (Unbleached) White Cotton Cloth White Cleaning Cloth 1 part cleaner in 4 parts water 1 part cleaner in 4 parts water	Pre-clean by wiping or brushing with A-A-59601 or MIL-PRF-680, Type II solvent, then apply cleaner solution with foam generator, spray, sponge, or cloth. Allow the cleaner to dwell for up to one minute without scrubbing then scrub for up to a minute. Rinse thoroughly, then dry. Do not allow cleaning solution to dry on surfaces or streaking will occur. Use of MIL-PRF-87937, Type I is subject to restrictions noted above in Exterior Painted Surfaces.
	Stubborn Soil on Gloss Painted Aircraft (scuff marks, exhaust, etc.)	MIL-PRF-87937, Type IV MIL-PRF-85570, Type III, IV or V	1 part cleaner in 4 parts water Undiluted	Apply cleaner with a damp cloth. Rub with a circular motion. Rinse thoroughly, then dry. Do not allow the cleaner to dry on surfaces or rinsing may be difficult.
	Stubborn Soil on Low Gloss/Flat and/or Camouflage Paint Scheme Aircraft (scuff marks, exhaust, etc.)	MIL-PRF-85570, Type IV	Undiluted	Apply cleaner with a non-abrasive cleaning pad. Allow 1-3 minutes dwell time. Rub with a circular motion. Rinse thoroughly, then dry. Do not allow the cleaner to dry on surfaces or rinsing may be difficult.

Table 3-2. Cleaning of Specific Areas and Components - Continued

Area or Component	Type of Soil	Cleaning Agent or Compound	Mixing Directions and Nomenclature	Cleaning Procedures
	WARNING Wear rubber gloves, chemical or splash proof goggles, and water resistant boots during cleaning operations using MIL-PRF-87937 or MIL-PRF-85570 cleaning compounds. If cleaner is splashed in eyes, rinse thoroughly with fresh water for 15 minutes and report to medical facility. Remove clothing saturated with cleaning solution immediately and flush exposed skin with fresh water. **CAUTION** Do not allow MIL-PRF-87937 or MIL-PRF-85570, Type I cleaning solutions to contact canopy, window, or windshield/windscreen transparent plastic panels as they may cause crazing.			
EXTERIOR SURFACES, UNPAINTED	Gunblast residues, carbonized exhaust residues	MIL-PRF-87937 or MIL-PRF-85570, Type I or MIL-PRF-87937, Type III or MIL-PRF-85570, Type IV or V	1 part cleaner in 4 parts water Undiluted	Wet surface with fresh water. Apply cleaning solution and scrub briskly with A-A-58054 Type I, Grade A or B abrasive mat. Rinse with fresh water and dry. Use of MIL-PRF-87937, Type I is subject to restrictions noted above in Exterior Painted Surfaces.
	WARNING • Wear rubber gloves, chemical or splash proof goggles, and water resistant boots during cleaning operations using MIL-PRF-87937 or MIL-PRF-85570 cleaning compounds. If cleaner is splashed in eyes, rinse thoroughly with fresh water for 15 minutes and report to medical facility. Remove clothing saturated with cleaning solution immediately and flush exposed skin with fresh water. • When using Ammonium Hydroxide (Ammonia), do not breathe vapors and avoid skin contact. Wash immediately if spilled on skin. **CAUTION** • When using Ammonium Hydroxide (Ammonia), do not allow any solutions to contact aircraft wiring. Flush immediately with fresh water if spillage occurs. • Avoid use of compressed air to clean electronic equipment. Do not use abrasives in radome compartments.			

Table 3-2. Cleaning of Specific Areas and Components - Continued

Area or Component	Type of Soil	Cleaning Agent or Compound	Mixing Directions and Nomenclature	Cleaning Procedures
INTERIOR AREAS				
Lavatories	Urine residue	A-A-59370	Ammonium Hydroxide (Ammonia) 1 part in 20 parts water	Sponge with a solution of ammonium hydroxide (Ammonia). Flush with fresh water or wet surface with sodium bicarbonate solution, allow to dry, and rinse with fresh water. Dry with a clean cloth.
		ASTM D 928	Sodium Bicarbonate, 6 oz to 1 gallon of fresh water	
		USDA Reg 100-12-1	Germicidal Tablets	Use germicidal tables as toilet and urinal deodorants.
	All types of soils on lava-tory surfaces	O-D-1435; A-A-1048; or SAE AMS 1453	Mix per manf. instructions	Pour solution into toilets, urinals, and latrine buckets. Scrub with a brush, and rinse with fresh water. Sponge all other surfaces with the solution, sponge area with fresh water; and wipe dry.
Floor and Deck	Dirt, debris	MIL-PRF-87937, Type II or IV or MIL-PRF-85570, Type II (Preferred) or	1 part cleaner in 9 parts water	Remove loose dirt with vacuum cleaner. Wipe with cleaning compound, and rinse with fresh water. Use of MIL-PRF-87937, Type I is subject to restrictions noted above in Exterior Painted Surfaces.
		MIL-PRF-87937, or MIL-PRF-85570, Type I (Alternate)	1 part cleaner in 16 parts water	
Radome and Equipment Compartment (interior)	Dust, dirt, oil, and debris	MIL-PRF-87937, Type II or IV or MIL-PRF-85570 Type II and	1 part cleaner in 16 parts water	Remove loose dirt with a vacuum cleaner. Wipe fiberglass and other surfaces with a cloth wet with cleaning solution and rinse with cloth wet with fresh water. Dry with a clean cloth.
		CCC-C-440, Type I or II, Class 1 or A-A-59323, Type II or AMS 3819, Class 1, Grade A or B	Cotton Cheesecloth (Unbleached) Cleaning Cloth, Low lint White Cleaning Cloth	
Cockpit Interior	Dust, dirt, mud, and light debris	MIL-PRF-87937, Type II or IV or MIL- PRF-85570, Type II and	1 part cleaner in 9 parts water	Loosen any accumulations of mud on control pedals, floors, or other cockpit equipment with brush and remove with vacuum cleaner. Wipe with cloth wet with cleaning solution and follow with a cloth wet with fresh water. Dry with a clean cloth.
		A-A-50129	Cloth, Flannel	
Environmental Control Ducting	Light debris, dust, and grime	MIL-PRF-87937, Type II or IV or MIL-PRF-85570, Type II	1 part cleaner in 9 parts water	Refer to applicable maintenance manuals.

Table 3-2. Cleaning of Specific Areas and Components - Continued

Area or Component	Type of Soil	Cleaning Agent or Compound	Mixing Directions and Nomenclature	Cleaning Procedures
	NOTE Refer to aircraft system peculiar manual to determine acrylic plastic parts			
ACRYLIC PLASTIC PARTS (EXCEPT CANOPIES and WINDOWS)	Light soil and smudges	MIL-PRF-87937, Type II or IV or MIL-PRF-85570, Type II and A-A-50129	1 part cleaner in 16 parts water Cloth, Flannel	Wipe with cloth wet with cleaning solution and follow with a cloth wet with fresh water. Dry with a clean cloth.
INTERIOR PLASTIC AND GLASS PANELS		A-A-50129	Cloth, Flannel	Vacuum and then dust with soft, clean, damp cloth. Keep cloth free of grit by rinsing frequently in water and wringing out.
ELASTOMERIC SEALS	Dust, dirt, oil, and grime	MIL-PRF-87937, Type II or IV or MIL-PRF-85570, Type II	1 part cleaner in 9 parts water	Wipe with cloth wet with cleaning solution and rinse with a cloth wet with fresh water. Dry with a clean cloth.
ELASTOMERIC SEALS - Cont.		CCC-C-440, Type I or II, Class 1 or A-A-59323, Type II or AMS 3819, Class 1, Grade A or B	Cotton Cheesecloth (Unbleached) Cleaning Cloth (Low lint) White Cleaning Cloth	
	WARNING Wear rubber gloves, chemical or splash proof goggles, and water resistant boots during cleaning operations using MIL-PRF-87937 and MIL-PRF-85570 cleaning compounds. If cleaner is splashed in eyes, rinse thoroughly with fresh water for 15 minutes and report to medical facility. Remove clothing saturated with cleaning solution immediately and flush exposed skin with fresh water.			
FABRIC PARTS, SOUND-PROOFING AND UPHOLSTERY	Light soil and oil spots	MIL-PRF-87937, Type II or IV or MIL-PRF-85570, Type II	1 part cleaner in 4 parts water	Remove loose dirt with vacuum cleaner. Apply soap solution with sponge and scrub briskly. Rinse with clean, dampened rag or sponge using clean, fresh water. Allow area to dry. Raise nap by brushing.

Table 3-2. Cleaning of Specific Areas and Components - Continued

Area or Component	Type of Soil	Cleaning Agent or Compound	Mixing Directions and Nomenclature	Cleaning Procedures
	WARNING Do not use synthetic wiping cloths with flammable solvents, such as TT-N-95 aliphatic naphtha.			
	CAUTION Refer to aircraft system peculiar manual to determine cleaning procedures for aircraft canopies. In addition, refer to TO 1-1A-12. Remove rings, watches, or other hard objects from hands and wrists before washing transparent plastics. Personnel must also take precautions to prevent buttons, badges, or other hard objects from scratching surfaces. Do not use hard, dirty, or gritty cloths in cleaning and polishing transparent plastics. Wiping with such cloths can mar and scratch plastic surfaces. Do not use any chemical compounds unless specifically authorized for cleaning plastics. Do not rub dry plastic panels with dry cloth, which might scratch surface or create electrostatic charge that attracts dust.			
CANOPY EXTERIOR, PLASTIC AND GLASS WINDOW AND WINDSHIELD/ WINDSCREEN PANELS	Dust, dirt grime, salt spray,	P-P-560 and	Plastic Polish Compound	Rub gently with bare hands or clean cloth while flushing with fresh water to remove loose dirt. Apply polishing compound with a soft, clean cloth and rub using a circular motion until clean. Polish with another soft, clean cloth.
		A-A-50129	Cloth, Flannel	
CANOPY EXTERIOR, PLASTIC AND GLASS	Oil, grease	TT-N-95 and	Aliphatic Naphtha	Apply naphtha with soft, clean cloth. Blot gently; solvent will evaporate and not leave a film.
WINDOW AND WINDSHIELD/ WINDSCREEN PANELS-Cont.		P-P-560 and	Plastic Polish Compound	Apply polishing compound. Rub using a circular motion until clean and polish with another soft, clean cloth.
		A-A-50129	Cloth, Flannel	

Table 3-2. Cleaning of Specific Areas and Components - Continued

Area or Component	Type of Soil	Cleaning Agent or Compound	Mixing Directions and Nomenclature	Cleaning Procedures
	WARNING • Open all circuit breakers associated with battery power (refer to applicable system peculiar maintenance manuals) prior to application of MIL-PRF-680 Degreasing Solvent or A-A-59601 Dry Cleaning and Degreasing Solvent, PD680. • Both of these solvents are combustible. Keep away from open flames. Use in a well-ventilated area. Wear rubber gloves and chemical or splash proof goggles. Avoid skin contact. Consult the local safety office regarding respiratory protection.			
	CAUTION Do not use excessive cleaning solvent on control cables. Solvent will remove internal lubricant.			
CONTROL CABLES	Dust, dirt oil, grease	A-A-59601 or MIL-PRF-680, Type II and	Degreasing Solvent	Wipe with clean cloth dampened with solvent. Apply MIL-C-81309, Type II water displacing CPC to cables, and recoat cables with MIL-PRF-16173, Grade 4 CPC.
CONTROL CABLES - Cont.		MIL-C-81309, Type II and MIL- PRF -16173, Grade 4	Water Displacing, CPC CPC	
	CAUTION Wipe away from seal areas to preclude collection of soil at seal junction areas. Make sure piston surface is clean and completely lubricated but not dripping. If piston is dry, telescoping action of strut will force gritty particles into cylinder causing leaks and eventual failure. Do not use aerosol type cleaning fluids on hydraulic systems.			
LANDING GEAR EXPOSED PISTON SURFACES	Sand, dirt, salt deposits, and other foreign particles	MIL-H-83282	Hydraulic Fluid,	Clean exposed surfaces with clean cloth dampened with hydraulic fluid. Take care not to scratch the surface. Wipe away from seals, not toward them.
		CCC-C-440, Type I or II, Class 1 or A-A-59323, Type II or AMS 3819, Class 1, Grade A or B	Cotton Cheesecloth (Unbleached) Cleaning Cloth (Low lint) Cleaning Cloth	

Table 3-2. Cleaning of Specific Areas and Components - Continued

Area or Component	Type of Soil	Cleaning Agent or Compound	Mixing Directions and Nomenclature	Cleaning Procedures
	WARNING • Open all circuit breakers associated with battery power (refer to applicable system peculiar maintenance manuals) prior to application of MIL-PRF-680 Degreasing Solvent or A-A-59601 Dry Cleaning and Degreasing Solvent, PD680. • Both of these solvents are combustible. Keep away from open flames. Use in a well-ventilated area. Wear rubber gloves and chemical or splash proof goggles. Avoid skin contact. Consult the local safety office regarding respiratory protection.			
	CAUTION Do not use MIL- PRF-16173, Grade 4 or MIL-C-85054 on micro-switches or exposed piston rod surfaces.			
DOORS, LINKAGES, CYLINDERS	Dust, dirt, oil, grease	A-A-59601 or MIL-PRF-680, Type II MIL-PRF-16173, Grade 4 or MIL-C-85054	Degreasing Solvent CPC CPC	Brush surfaces as necessary with solvent. Cover rod ends and springs with MIL-PRF-16173, Grade 4 CPC. Where lubrication is not required, MIL-C-85054 CPC may be applied.
	WARNING • Dust, corrosion products, and other fine particles generated by beryllium and beryllium-copper alloys are toxic when inhaled or allowed to contact the skin. Severe poisoning can results if beryllium dust is inhaled. • Wear rubber gloves, chemical or splash proof goggles, and water resistant boots during cleaning operations using MIL-PRF-87937, MIL-PRF-85570, or Mil-C-43616 cleaning compounds. If cleaner is splashed in eyes, rinse thoroughly with fresh water for 15 minutes and report to medical facility. Remove clothing saturated with cleaning solution immediately and flush exposed skin with fresh water.			
WHEELS AND BRAKES	Oil, grease, dirt, sand, and other foreign matter	MIL-PRF-87937, Type I, II, or IV or MIL-PRF-85570, Type I or II or MIL-C-43616, Class 1 or A-A-59601 or MIL-PRF-680, Type II or III or	1 part cleaner in 4 parts water Undiluted	clean exposed areas with cleaner solution or solvent by brushing. Rinse thoroughly with fresh water. Relubricate as required. Use of MIL-PRF-87937, Type I is subject to restrictions noted above in Exterior Painted Surfaces.

Table 3-2. Cleaning of Specific Areas and Components - Continued

Area or Component	Type of Soil	Cleaning Agent or Compound	Mixing Directions and Nomenclature	Cleaning Procedures
		AF Drawing # 9825019 specified materials	Dilute and/or mix per manufacturer's instructions	Use only those cleaners listed in the most current revision of AF Drawing No. 9825019. Place off aircraft parts in the Aqueous Parts Washer and run through the complete wash, rinse, and dry cycle.
	WARNING • Open all circuit breakers associated with battery power (refer to applicable system peculiar maintenance manuals) prior to application of MIL-PRF-680 Degreasing Solvent or A-A-59601 Dry Cleaning and Degreasing Solvent, PD680. • Both of these solvents are combustible. Use in a well-ventilated area. Keep it away from open flames. Avoid contact with skin. • Wear rubber gloves, chemical or splash proof goggles, and water resistant boots during cleaning operations using MIL-PRF-87937, MIL-PRF-85570, or MIL-C-43616 cleaning compounds. If cleaner is splashed in eyes, rinse thoroughly with fresh water for 15 minutes and report to medical facility. Remove clothing saturated with cleaning solution immediately and flush exposed skin with fresh water.			
	CAUTION Protect tires from contact with degreasing solvents or cleaning solutions.			
LANDING GEAR (OTHER THAN EXPOSED PISTON AREA) AND WHEEL WELLS	Dirt, grease, hydraulic fluid, etc.	MIL-PRF-87937, Type III or MIL-PRF-85570, Type V or	Undiluted	Apply thixotropic gel Type III or Type V cleaner with spray or brush and allow a 5-15 minute dwell. Brush, if necessary, and rinse thoroughly with fresh water. Repeat rinsing with brushing to remove cleaner residues.
		A-A-59601 or MIL-PRF-680, Type II or III	Undiluted Degreasing Solvent	Alternate procedure: Brush on solvent to loosen stubborn soil.
		MIL-C-43616, Class 1 or MIL-PRF-85570, Type I	1 part cleaner in 4 parts water	Apply MIL-C-43616, Class 1, MIL-PRF-85570, Type I, or MIL-PRF-87937,Type I clean ing solution, brush, and rinse. Omit solvent presoak if desired. Use of MIL-PRF-87937, Type I may be restricted as noted above in Exterior Painted Surfaces.

Table 3-2. Cleaning of Specific Areas and Components - Continued

Area or Component	Type of Soil	Cleaning Agent or Compound	Mixing Directions and Nomenclature	Cleaning Procedures
	WARNING Before cleaning electrical and avionic equipment, make sure electrical power is disconnected. Injury and death may otherwise result.			
	CAUTION Avoid use of compressed air in electronic compartments because air can force dust, dirt, and other foreign materials into components or equipment and cause damage.			
ELECTRICAL CONNECTORS AND AVIONIC COMPONENTS	Dust, dirt, lint, and other loose foreign matter, grease, oil smudges, light tarnish, corrosion, or fungi			Refer to TO 1-1-689
	WARNING • Open all circuit breakers associated with battery power (refer to applicable system peculiar maintenance manuals) prior to application of TT-I-735 isopropyl alcohol. • Do not use synthetic wiping cloths with flammable solvents such as TT-I-735 isopropyl alcohol.			
ORGANIC MATERIALS; MILDEW, MOLD, FUNGUS, ETC	Fungi, mold, mildew, etc.	TT-I-735	Isopropyl Alcohol	Wipe with clean cloth wet with isopropyl alcohol. To prevent recurring fungus growth, keep area dry and clean. For treatment of fungus in fuel systems, contact the appropriate aircraft SPD and/or missile or equipment SPM.
		CCC-C-440, Type I or II, Class 1 or A-A-59323, Type II or AMS 3819, Class 1, Grade A or B	Cotton Cheesecloth Cleaning Cloth Low lint Cleaning Cloth	
OXYGEN LINES (EXTERIOR SURFACES)	Oil, grease	Refer to system peculiar maintenance manuals.		

Table 3-2. Cleaning of Specific Areas and Components - Continued

Area or Component	Type of Soil	Cleaning Agent or Compound	Mixing Directions and Nomenclature	Cleaning Procedures
	WARNING Wear rubber gloves, chemical or splash proof goggles, and water resistant boots during cleaning operations using MIL-PRF-87937 or MIL-PRF-85570 cleaning compounds. If cleaner is splashed in eyes, rinse thoroughly with fresh water for 15 minutes and report to medical facility. Remove clothing saturated with cleaning solution immediately and flush exposed skin with fresh water.			
RELIEF TUBES (EXTERIOR)	Human waste (urine)	MIL-PRF-87937, Type II or IV or MIL-PRF-85570, Type II	1 part cleaner in 9 parts water	Wash thoroughly with solution using a soft, bristle brush, then rinse thoroughly with fresh water and wipe dry.
	WARNING Wear rubber gloves, chemical or splash proof goggles, and water resistant boots during cleaning operations using MIL-PRF-87937 or MIL-PRF-85570 cleaning compounds. If cleaner is splashed in eyes, rinse thoroughly with fresh water for 15 minutes and report to medical facility. Remove clothing saturated with cleaning solution immediately and flush exposed skin with fresh water.			
	CAUTION Do not use strong alkaline cleaners or highly abrasive compounds when cleaning rotor tip cap areas. Refer to systems peculiar technical orders for specific cleaning instructions.			
HELICOPTER AND PROPELLER BLADES	Grime, oil, grease, exhaust stains	MIL-PRF-87937, Type IV or MIL-PRF-85570, Type II A-A-3100	1 part cleaner in 9 parts water Cleaning Pad	Apply cleaning solution with a cleaning pad or brush and agitate. Rinse with fresh water and wipe dry.
HELICOPTER CARGO AND RESCUE HOIST CABLE, AND END FITTINGS	Salt, and salt water	MIL-PRF-16173, Grade 3 or MIL-C-81309, Type II or MIL-L-87177, Type I, Grade B A-A-50129	Water Displacing Corrosion Preventive Compound Cloth, Flannel	Flush thoroughly with fresh water. Blow dry with clean, compressed air or thoroughly dry with a cotton cloth. Spray with MIL-PRF-16173, Grade 3; MIL-C-81309, Type II; or MIL-L-87177, Type I, Grade B compound as it is being rewound. Remove excess with clean dry cloth.

Table 3-2. Cleaning of Specific Areas and Components - Continued

Area or Component	Type of Soil	Cleaning Agent or Compound	Mixing Directions and Nomenclature	Cleaning Procedures
	WARNING Wear rubber gloves, chemical or splash proof goggles, and water resistant boots during cleaning operations using MIL-C-43616, MIL-PRF-87937, or MIL-PRF-85570 cleaning compounds. If cleaner is splashed in eyes, rinse thoroughly with fresh water for 15 minutes and report to medical facility. Remove clothing saturated with cleaning solution immediately and flush exposed skin with fresh water.			
HELICOPTER CARGO AND RESCUE HOIST DRUM	Salt, and salt water	MIL-PRF-87937 or MIL-PRF-85570, Type I or MIL-C-43616, Class 1	1 part cleaner in 9 parts water	Rinse with fresh water. Apply cleaning solution and scrub with a clean cloth or sponge. Rinse with clean water. Blow dry with clean, compressed air or dry with a clean, dry cloth. Use of MIL-PRF-87937, Type I may be restricted as noted above in Exterior Painted Surfaces.
	WARNING Wear rubber gloves, chemical or splash proof goggles, and water resistant boots during cleaning operations using MIL-PRF-87937 or MIL-PRF-85570 cleaning compounds. If cleaner is splashed in eyes, rinse thoroughly with fresh water for 15 minutes and report to medical facility. Remove clothing saturated with cleaning solution immediately and flush exposed skin with fresh water.			
HELICOPTER RESCUE SLING	Salt, and salt water	MIL-PRF-87937, Type IV or MIL-PRF-85570, Type II	1 part cleaner in 9 parts water	Rinse with fresh water. Apply cleaning solution with sponge or clean cloth. Rinse thoroughly with fresh water. Blow dry with clean compressed air or suspend and allow to dry. If suspended to dry, ensure water will drain away from the buckle.
	WARNING • Open all circuit breakers associated with battery power (refer to applicable system peculiar maintenance manuals) prior to application of MIL-PRF-680 Degreasing Solvent or A-A-59601 Dry Cleaning and Degreasing Solvent, PD680. • Both of these solvents are combustible. Keep away from open flames. Use in a well-ventilated area. Wear rubber gloves and chemical or splash proof goggles. Avoid skin contact. Consult the local safety office regarding respiratory protection.			

Table 3-2. Cleaning of Specific Areas and Components - Continued

Area or Component	Type of Soil	Cleaning Agent or Compound	Mixing Directions and Nomenclature	Cleaning Procedures
ENGINES, RECIPROCATING	Oxidized oil, dust, carbon, salt deposits	A-A-59601 or MIL-PRF-680, Type II and CCC-C-440, Type I or II, Class 1 or A-A-59323, Type II or AMS 3819, Class 1, Grade A or B	Degreasing Solvent Cotton Cheesecloth (Unbleached) Cleaning Cloth Low Lint Cleaning Cloth	Apply solvent with cleaning cloth or brush. Repeat application and dry. Collect solvent runoff and dispose in accordance with local regulations.
	WARNING Wear rubber gloves, chemical or splash proof goggles, protective wet weather clothing where necessary, and water resistant boots during cleaning operations using cleaning compound MIL-PRF-85704, Types II or II RTU. If cleaner is splashed in eyes, rinse thoroughly with fresh water for 15 minutes and report to medical facility. Remove clothing saturated with cleaning solution immediately and flush exposed areas with fresh water.			
	CAUTION • Use only MIL-PRF-85704 cleaning compound for cleaning turbine engine gas paths. Prepare aircraft in accordance with applicable system peculiar maintenance manuals and/or maintenance work cards. In case of conflict, the manuals and/or work cards take precedence over the following instructions. • MIL-PRF-85704, Type I gas path cleaners typically contain 30 to 60 percent solvent. When diluted (1 part cleaner to 4 parts water), some products are above the 10% solvent limit; and most contain enough naphthalene to cause wash rack runoff to exceed the discharge permit limits. The current substitute is MIL-PRF-85704, Type II, a water-base product that contains less than 10 percent solvent in the concentrate. This material shall be used at the same dilution ratio while using the same starter cranked engine wash procedures, which are currently approved in aircraft engine manuals. MIL-PRF-85704, Type II RTU is ready to use (does not require dilution, but required 5 times the storage space since it is already diluted with water).			
GAS TURBINE ENGINE INTER-IOR (GAS PATH)	Oxidized oil, dust, carbon, salt deposits	MIL-PRF-85704, Type II or MIL-PRF-85704, Type II RTU	1 part cleaner in 4 parts water Do not dilute, this is a ready mix form	Use in accordance with applicable engine maintenance manual instructions. Dispose of waste cleaner in accordance with local regulations.

Table 3-2. Cleaning of Specific Areas and Components - Continued

Area or Component	Type of Soil	Cleaning Agent or Compound	Mixing Directions and Nomenclature	Cleaning Procedures
	WARNING Wear rubber gloves, chemical or splash proof goggles, and water resistant boots during cleaning operations using MIL-PRF-87937, MIL-PRF-85570, MIL-C-43616, or MIL-PRF-85704, Types I or II cleaning compounds. If cleaner is splashed in eyes, rinse thoroughly with fresh water for 15 minutes and report to medical facility. Remove clothing saturated with cleaning solution immediately and flush exposed skin with fresh water.			
	CAUTION Prepare aircraft in accordance with applicable system peculiar maintenance manuals and/or maintenance work cards. In case of conflict, the manuals and/or work cards take precedence over the following instructions.			
GAS TURBINE ENGINE EXTERIOR, ENGINE BAY AND ENGINE BAY DOORS	Oxidized oil, dust, carbon, salt deposits	MIL-C-43616, Class 1 or MIL-PRF-85704, Type I or II or MIL-C-43616, Class 1A or MIL-PRF-85704, Type II RTU or MIL-PRF-87937, Type IV or MIL-PRF-85570, Type II or MIL-PRF-87937, Type III or MIL-PRF-85704, Type V	1 part cleaner in 4 parts water Aerosol Can Do not dilute, this is a ready mix form 1 part cleaner in 4 parts water Undiluted concentrate	Apply mixed cleaning solutions (MIL-C-43616, Class 1; MIL-PRF-85704, Type I or II; MIL-PRF-87937, Type IV; or MIL-PRF-85570, Type II) or the pre-mixed cleaners (MIL-C-43616, Class 1A or MIL-PRF-85704, Type II RTU) with a brush, scrub, then rinse with fresh water. When using the MIL-PRF-87937, Type III or MIL-PRF-85570, Type V, apply the undiluted concentrate with a brush, allow cleaner to remain on surface for 5 minutes, then brush and rinse thoroughly. Dispose of waste cleaners in accordance with local directives.
	WARNING Never use a wire brush to clean a battery or a battery area. Wear rubber gloves, a rubber apron, and protective goggle when handling batteries.			

Table 3-2. Cleaning of Specific Areas and Components - Continued

Area or Component	Type of Soil	Cleaning Agent or Compound	Mixing Directions and Nomenclature	Cleaning Procedures
	CAUTION • Nickel-cadmium batteries must not be exposed to acid or acid vapors. Battery electrolytes are extremely corrosive. Spilled electrolyte shall be removed immediately. Refer to applicable system peculiar aircraft, missile, or equipment manuals for battery type. • Fumes from overheated electrolyte will spread to adjacent areas, causing rapid corrosion on unprotected surfaces. **NOTE** Refer to chapter 7 for additional instructions.			
Battery Compartments	Nickel-cadmium battery electrolyte deposits (potassium hydroxide solution)	A-A-59282 or ANSI/AWWA B 504 MIL-C-81309, Type II, Class 1 or 2, or MIL-L-87177, Type I or II, Grade B	Boric Acid Monobasic sodium phosphate Mix either material 6 oz in 1 gallon water Water Displacing CPC	Remove spilled electrolyte immediately by flushing with fresh water. Spray the contaminated area with Bromothymol Blue solution (Refer to Chapter 7). Neutralize the area by sponging or spraying generously with boric acid or sodium phosphate solution. Brush with a fiber bristle brush and flush with fresh water. Reapply the Bromothymol Blue solution to determine if all the electrolyte has been neutralized. Retreat area as required and rinse. Dry with clean wiping cloths. Keep the cell vents open, but do not allow any solutions to enter the cells. Preserve compartment with MIL-C-81309, Type II, Class 1 or 2 or MIL-L-87177, Type I or II , Grade B CPC. Do not paint or preserve batteries.

Table 3-2. Cleaning of Specific Areas and Components - Continued

Area or Component	Type of Soil	Cleaning Agent or Compound	Mixing Directions and Nomenclature	Cleaning Procedures
	Lead-acid battery electrolyte deposits (sulfuric acid solution)	ASTM D 928	Sodium bicarbonate, 6 oz in 1 gallon water	Remove spilled electrolyte immediately by flushing with fresh water. Spray the contaminated area with Litmus solution (Refer to Chapter 7). Neutralize the area by sponging or spraying with sodium bicarbonate solution. Apply generously until bubbling stops and the Litmus solution turns blue. Let it stay on the surface for 5 minutes, but do not allow to dry. Brush with a fiber bristle brush, then flush with fresh water. Reapply the Litmus solution to determine if all the electrolyte has been neutralized. Retreat the area as required and rinse. Dry with clean wiping cloths. Keep the cell vents open but do not allow any solutions to enter the cells. Preserve compartment with MIL-C-81309, Type II, Class 1 or 2, or MIL-L-87177, Type I or II, Grade B CPC. Do not paint or preserve batteries.
		MIL-C-81309, Type II, Class 1 or 2, or MIL-L-87177, Type I or II, Grade B	Water Displacing CPC	
	WARNING • Wear rubber gloves, chemical or splash proof goggles, and water resistant boots during cleaning operations using MIL-PRF-87937 or MIL-PRF-85570 cleaning compounds. If cleaner is splashed in eyes, rinse thoroughly with fresh water for 15 minutes and report to medical facility. Remove clothing saturated with cleaning solution immediately and flush exposed skin with fresh water. • A-A-59601, Type III Dry Cleaning and Degreasing Solvent, PD680 and MIL-PRF-680, Type III Degreasing Solvent are non-combustible, but can still burn if exposed to flames. Use in a confined area is allowed, but this area should still be well-ventilated. Keep away from open flames. Avoid contact with skin.			
BILGE AREAS	Hydraulic fluid, water, dirt, metallic debris	MIL-PRF-87937, Type II or IV, or MIL-PRF-85570, Type II or	1 part cleaner in 9 parts water	Vacuum clean liquids and debris. Wipe area with a sponge dampened in cleaning solution. Rinse by sponging with fresh water. Wipe dry with a clean cloth.
		MIL-PRF-87937 or MIL-PRF-85570, Type I or	1 part cleaner in 16 parts water	Use of MIL-PRF-87937, Type I may be restricted as noted above in Exterior Painted Surfaces.
		A-A-59601 or MIL-PRF-680, Type III	Degreasing Solvent	Wipe with cloth dampened with solvent. Wipe dry with a clean cloth.

Table 3-2. Cleaning of Specific Areas and Components - Continued

Area or Component	Type of Soil	Cleaning Agent or Compound	Mixing Directions and Nomenclature	Cleaning Procedures
	Algae contamination	MIL-PRF-87937, Type IV, or MIL-PRF-85570, Type II or MIL-PRF-87937 or MIL-PRF-85570, Type I or MIL-PRF-87937, Type III or MIL-PRF-85570, Type V	1 part cleaner in 4 parts water 1 part cleaner in 9 parts water Undiluted concentrate	Mix cleaner and water in a pump spray bottle. Spray mixture on contaminated area and allow it to dwell at least 2 minutes. Wipe off with a sponge and dry with a clean cloth. Use of MIL-PRF-87937, Type I may be restricted as noted above in Exterior Painted Surfaces.
OPTICAL GLASS	Dust, grease, oil	A-A-59199 and A-A-50129	Optical cleaner Cloth, Flannel	Spray cleaner onto flannel and carefully wipe the lens or other optical surface. Wipe dry with clean flannel cloth.
EJECTION SEATS	**WARNING** • Application of corrosion preventive compounds (CPC's) or paints to certain areas of ejection seats could prevent or restrict seat operation. Specific ejection seat instructions must be followed carefully. • See system peculiar ejection seat maintenance manuals and SPM instructions for corrosion prevention and control and lubrication of ejection seats.			
REMOVABLE METAL FUEL TANKS	Fuel residues, grease, and exhaust deposits	MIL-D-81956		Use MIL-D-81956 detergent in accordance with procedures in systems peculiar fuel tank manuals.

3.4 CLEANING EQUIPMENT.

CAUTION

- High pressure wash equipment which develops more than 175 PSI nozzle pressure shall not be used to apply cleaning compounds unless specifically authorized by the aircraft SPD and/or the missile or equipment SPM.
- High pressure wash equipment shall never be used on aircraft landing gear and components, wheels, and brakes as they can force lubricants out of bearings and attach points, and cause corrosion and wear problems.

NOTE

- Use only cleaning materials and equipment authorized and described in this manual. Experimentation with unauthorized cleaners may damage aircraft, missiles, and equipment thus reducing reliability and increasing maintenance costs.
- Cleaning equipment specific to one type of aircraft, missile, or piece of equipment is not covered by this manual. Approved equipment for general cleaning is discussed in this manual, and ordering information is presented in Appendix B of this manual. General operating instructions are in Paragraph 3.4.1 through 3.4.9. See specific equipment operating manuals for detailed equipment operating instructions.

3.4.1 High Pressure/Hot Water Wash Equipment. If approved by the aircraft SPD and/or the equipment SPM, high pressure/hot water wash equipment can be used for general purpose cleaning of aircraft, support equipment, and vehicles. These machines can deliver four gallons per minute of water and/or cleaning solution at a temperature of 210° F and a pressure of 3000 PSI at the attach points on the machine for each output hose. These machines shall be operated per these instructions and the directions in the specific equipment operating manual.

a. Fill the cleaner reservoir with only approved cleaning compounds.

b. Set the water cleaning compound mixture ratio to 50 parts water to 1 part cleaner.

c. Use only 40° flat fan spray nozzles.

d. Ensure that the nozzle stand-off distance to the surface is always at least 12 inches and never less.

NOTE

- Pressure and temperature at the nozzles will be less than at the hose attach points on the machine due to losses in the hoses.
- This equipment may remove any loose sealant and/or paint.

3.4.2 Portable, 15 Gallon, Foam Generating, Cleaning Unit. This cleaning unit is compact, portable, light, and ideal for cleaning hard to reach areas. It consists of a 54 inch applicator wand, 50 feet of hose, and a 15 gallon tank mounted on a frame with rubber tire wheels (refer to Figure 3-1). The control system allows the operator to adjust the foam wetness to fit any job. The cleaning unit provides a foam capable of clinging to vertical surfaces to soften and dislodge soils. These machines shall be operated per these instructions and the directions in the specific equipment operating manual:

WARNING

Do not service the portable 15 gallon foam generating cleaning unit without releasing the tank pressure.

CAUTION

When the cleaning task is completed, drain and flush the tank with fresh water to prevent forming an extremely concentrated solution by pouring additional cleaner into the solution remaining in the tank which could damage the equipment being cleaned.

a. Release the tank pressure prior to servicing, and remove the tank fill cap. Fill the tank with an authorized, pre-diluted cleaning solution, while leaving an adequate air space at the top of the tank. Replace the tank fill cap.

b. Connect the air supply hose to the air inlet valve on the air regulator.

NOTE

Table 3-2 for the proper cleaner to water mix ratio.

c. Open the cleaning compound metering valve and the air inlet valve to the full open position and set the air regulator to a pressure within the range of 30 to 70 PSI.

d. Open the foam discharge valve while directing the nozzle at the surface to be cleaned.

e. If the foam is too wet, close the cleaning compound metering valve slightly. If the foam is too dry, open the cleaning compound metering valve slightly and/or lower the air pressure slightly by adjusting the air regulator. Dry foams have a longer dwell time and prolong the cleaning operation, but wet foams clean better.

f. Apply the foam to the surface and allow it to dwell for a minimum of one minute, but not long enough to dry on the surface, and then scrub with a cleaning kit, brush, or cloth and rinse. Refer to Table 3-2 for additional instructions.

3.4.3 Portable, 45 Gallon, Foam Generating Cleaning Unit. This cleaning unit is a simplified, portable pressure operated, foam-dispensing system (refer to Table 3-2). It uses available air supply for its power source without using pumps. Air is metered directly into the pressurized solution chamber which forces cleaning solution into the hose to create foam. These machines shall be operated per these instructions and the directions in the specific equipment operating manual:

WARNING

Do not service the portable 45 gallon foam generating cleaning unit without releasing the tank pressure.

CAUTION

When the cleaning task is completed, drain the tank and flush with fresh water to prevent forming an extremely concentrated solution by pouring additional cleaner into the solution remaining in the tank which could damage the equipment being cleaned.

a. Release the tank pressure prior to servicing. Close the cleaning compound metering valve and the air valve, and open the air dump valve to bleed off retained air pressure.

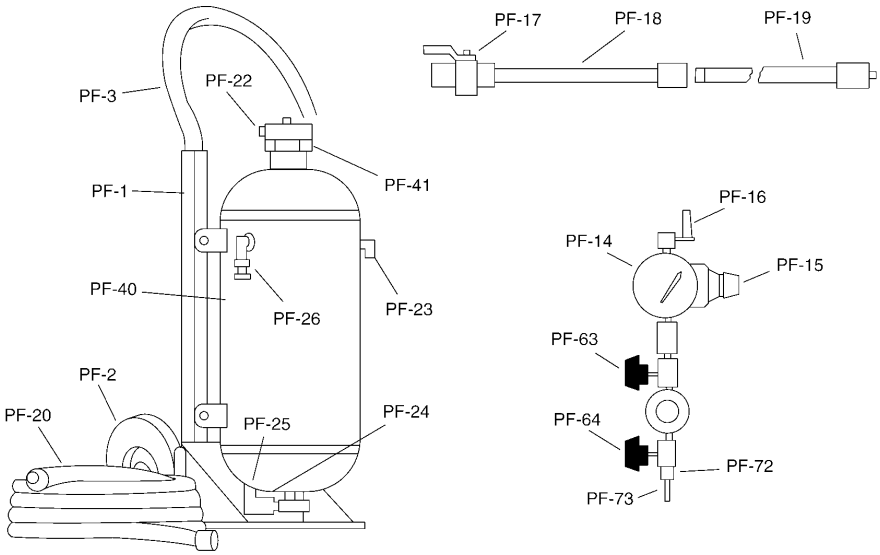

TANK CAPACITY:	15 GALLONS
TANK DIMENSIONS:	16 IN LONG X 17 IN WIDE X 42 IN HIGH
TANK WEIGHT (EMPTY):	68 POUNDS
COMPRESSED AIR PRESSURE:	40-110 PSI
FILLER HATCH OPENING:	3-1/4 IN
AIR LINE INLET:	1/4 IN (USE 3/8 IN OR 1/2 IN AIR LINE)
CFM REQUIRMENTS:	15 CFM
TANK CONSTRUCTION:	STAINLESS STEEL
FOAMING HOSE DIMENSIONS:	5/8 IN ID X 50 FT LONG, 200 PSI
SAFETY RELIEF VALVE:	125 PSI

PART NO.	DESCRIPTION	PART NO.	DESCRIPTION	PART NO.	DESCRIPTION
PF-1	PORTABLE CARRAGE	PF-18	SHORT WAND	PF-26	AIR BLEED VALVE
PF-2	WHEEL	PF-19	WAND EXTINSION	PF-40	COMPOUND TANK (15 GAL)
PF-3	CURVED HANDLE	PF-20	APPLICATION HOSE	PF-41	TANK CAP GASKET
PF-14	PRESSURE GAUGE	PF-22	TANK FILL CAP	PF-63	AIR METERING VALVE
PF-15	AIR REGULATOR	PF-23	SAFETY VALVE	PF-64	COMPOUND METERING VALVE
PF-16	AIR INLET VALVE	PF-24	CHECK VALVE	PF-72	SK FITTING (F)
PF-17	FOAM DISCHARGE VALVE	PF-25	SK FITTING (M)	PF-73	SS TUBING

NOTE

REPLACMENT PARTS NOT AVAILABLE BY NSN. ORDER FROM MANUFACTURER.

AWSCCC024

Figure 3-1. Foam Generating Cleaning Unit (15 Gallons)

TANK CAPACITY:	45 GALLONS
TANK DIMENSIONS:	48 IN LONG x 27 IN WIDE x 37 IN HIGH
TANK WEIGHT (EMPTY):	175 POUNDS
COMPRESSED AIR PRESSURE:	40-110 PSI
FILLER HATCH OPENING:	3-14 IN
AIR LINE INLET:	1/4 IN (USE 3/8 OR 1/2 IN AIR LINE)
CFM REQUIREMENTS:	15 CFM
TANK CONSTRUCTION:	STAINLESS STEEL
FOAMING HOSE DIMENSIONS:	5/8 IN ID x 50 FT LONG, 200 PSI
SAFETY RELEIF VAVLE:	125 PSI

Figure 3-2. Foam Generating Cleaning Unit (45 Gallons)

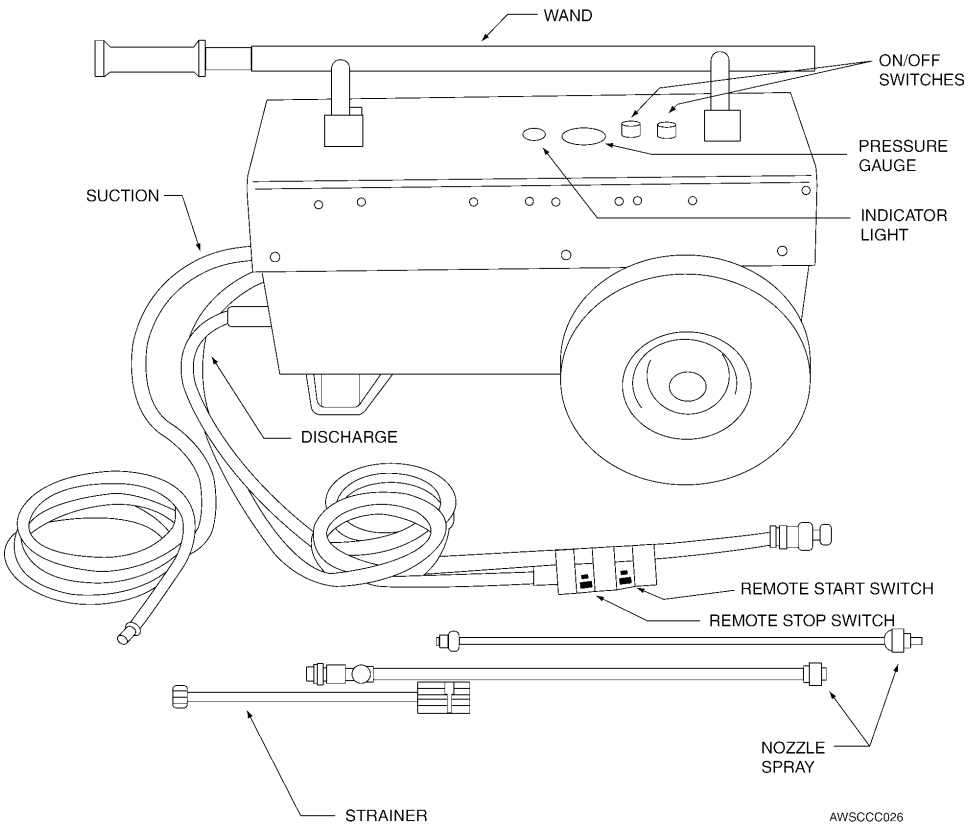

Figure 3-3. Universal Wash Unit

b. Open the tank by removing the cover retaining bolts and lifting off the cover. Fill the tank with an authorized, pre-diluted cleaning solution, while leaving an adequate air space at the top of the tank. Replace the cover and bolt it firmly in place.

NOTE

Refer to Table 3-2 for the proper cleaner to water mix ratio.

c. Make sure the cleaning compound metering valve and the air valve are closed. Attach an air line to the air inlet/dump valve on the side of the unit, and fill the void in the tank with air until the pressure is within the range of 30 to 70 PSI as indicated at the air regulator.

d. Open the air valve, and then open the cleaning compound metering valve slowly while pointing the nozzle at the surface to be cleaned. Adjust the cleaner compound metering valve until the desired foam consistency is reached.

e. If the foam is too wet, close the cleaning compound metering valve slightly and/or open the air valve slightly. If the foam is too dry, open the cleaning compound metering valve slightly and/or close the air valve slightly.

f. Apply the foam to the surface and allow it to dwell for a minimum of one minute, but not long enough to dry on the surface, and then scrub with a cleaning kit, brush, or cloth and rinse. Refer to Table 3-2 for additional instructions.

3.4.4 Turbine Engine Compressor Cleaning Equipment. Equipment used for cleaning aircraft turbine engines is contained in specific system peculiar engine TO's.

3.4.5 Miscellaneous Large Cleaning Equipment. Other equipment such as truck, trailer, or wash rack/hanger mounted spray or foam equipment may be available at many locations.

3.4.6 Spray Cleaning Guns for Solvents. These solvent spray guns have an extended nozzle/tube and require approximately 14 CFM of air at 50 PSI to siphon solvent or cleaner from container and deliver it to a surface in a non-atomized spray.

3.4.7 Pneumatic Vacuum Cleaner. This unit is a small, portable, wet/dry, air-operated vacuum cleaner for removing debris and water from aircraft (Refer to Appendix B).

3.4.8 Universal Wash Unit. Universal wash units are used for general purpose cleaning (refer to Figure 3-3). They apply cleaning solutions to aircraft and/or equipment surfaces in a non-foam state at the approximate rate of 2.5 gal/min. at a pressure of 30 PSI. These machines shall be operated per these instructions and the directions in the specific equipment operating manual:

WARNING

Use the universal wash unit in the horizontal position only.

a. Connect the strainer unit to the intake hose and insert it into the container of water or cleaning compound solution.

b. Connect the wand and the spray nozzle assembly to the output/discharge hose, or connect the discharge quick disconnect to the aircraft wash manifold quick disconnect.

c. Press the start switch on the unit or the remote start switch and observe the pressure gauge on the unit. It should indicate an increase of pressure immediately. When the pressure reaches approximately 10 PSI, release the start switch and the unit will continue to run.

d. Point the nozzle at the aircraft or equipment surface to be cleaned and spray the surface with the cleaning solution.

e. Press the stop switch on the unit or the remote stop switch to stop the unit.

f. Allow the cleaning compound solution to dwell for several minutes, but not long enough to dry on the surface, and then scrub with a cleaning kit, brush, or cloth and rinse. Refer to Table 3-2 for additional instructions.

3.4.9 Aqueous Parts Washers. These units are automatic industrial power washers comprised of an enclosed cabinet equipped with a system of spray impingement nozzles; a cycle timer; a cleaning solution reservoir with a heater unit; a fluid pump; and an effluent reservoir with a skimmer unit for removal of oil, grease, and residues (Refer to Figure 3-4 and Figure 3-5). These automatic washers can effectively clean aircraft, missile, and equipment components by using aqueous cleaning solutions applied at varying combinations of high temperatures and pressures for the removal of soils, oils/greases, corrosion preventive compounds, and other contaminants when authorized by the aircraft SPD and/or the missile or equipment SPM. These machines shall be operated per these instructions and the directions in the specific equipment operating manual:

WARNING

Materials used in and effluent generated by this cleaning process may be hazardous to personnel and the environment. Contact the local bioenvironmental engineer and safety office for guidance on personal protective equipment (PPE) and other health and safety precautions and waste disposal. Parts may be very hot and retain hot water and/or cleaning solution in part cavities at the end of the cleaning cycle. Handle parts with water proof and heat resistant protective gloves, and drain entrapped fluids back into the parts washer.

CAUTION

- Aqueous parts washers shall not be used to clean bearings unless authorized by system peculiar technical data.
- Due to the maximum allowable pH of 13.5 for the MIL-C-29602 cleaning compounds used in these parts washers, they can attack aluminum alloy and IVD aluminum coated parts. Aircraft SPD and/or missile or equipment SPM approval is required prior to cleaning these types of parts in aqueous parts washers.
- Due to the possibility for hydrogen embrittlement and other damage, only those cleaners which have been tested, approved, and listed in the most current revision of AF Drawing No. 9825019 by the Landing Gear (LG) SPM, OO-ALC/LGHLE shall be used in aqueous parts washers for cleaning LG components including wheels and brakes.
- Depending on the type of equipment used, water/cleaning solution spray pressures in aqueous parts washers can range from 40 to 100 PSI. Suitable fixtures and/or baskets must be used to secure components during the cleaning cycle to prevent damage caused by impingement of the high pressure spray.

3.4.9.1 The effectiveness of cleaning in aqueous parts washers is influenced by several factors that should be considered when using this cleaning method.

3.4.9.1.1 Spray Nozzles. There are two basic nozzle designs, fan and cone spray. The distance of the parts in the cabinet from the spray nozzles determines how effective the force of the spray from the nozzles will be and the area of coverage. Placing parts too close to the spray nozzles reduces the surface coverage of the nozzles and too far from the spray nozzles reduces the force of the spray. Understanding this and racking parts properly in aqueous parts washers will improve the cleaning effectiveness of the machine.

3.4.9.1.2 Bath Quality. Maintaining the condition of the cleaning bath affects its ability to remove soils. There are two types of detergents used in aqueous cleaning, emulsifying and non-emulsifying. Emulsifying cleaners break down the oils and greases and hold them in suspension in the bath. With these cleaning materials, their cleaning ability becomes degraded by excessive amounts of oil and greases being held in the bath. It is important to monitor and change the bath solution routinely to maintain effective cleaning. The non-emulsifying cleaners break down the oils and greases but do not hold the materials in the bath solution, they rise to the top of the bath. It is important to have an effective skimmer on machines using non-emulsifying cleaners to remove the oil and greases. The proper concentration of cleaner in the bath also affects the bath performance. The heated cleaning solutions cause evaporation and proper make up of both water and cleaner should be added. This should be monitored regularly and adjustments made per the manufacturer's instructions.

3.4.9.1.3 Skimmers and Filtration. Several types of both skimmers and filtration systems are available for use with aqueous parts washers. These have a major impact on maintaining bath quality. It is recommended that both the filters and skimmers be used and that they be maintained properly per manufacturer's instructions to ensure bath quality and the cleaning effectiveness of the machine.

3.4.9.2 Determine the capacity of the aqueous parts washer cleaning compound reservoir, and fill it with MIL-C-29602 or AF Drawing No. 9825019 approved cleaning compound solution mixed/diluted per the manufacturer's directions.

NOTE

Agitation prior to reaching the required operating temperature may cause the cleaning solution to foam excessively. Do not use the washer until the cleaning solution has stabilized at the proper temperature.

a. Allow the cleaning solution to stabilize at the temperature recommended by the manufacturer within the range of 140° to 180° F.

CAUTION

- When cleaning components which can entrap fluids, load the components in the basket so that as many cavities as possible that can entrap fluids are face down to prevent corrosion caused by fluid retention.
- Due to evaporation of the heated cleaning baths, the bath level must be monitored. This is necessary to ensure levels do not go down and expose the heating elements of the machine as this will cause them to burn out.

b. Place components to be cleaned in the aqueous parts washer, and either secure them to the turntable or secure the basket in which they are placed on the turntable.

CAUTION

Do not leave parts unattended in the washer cabinet as the very hot and humid environment inside the unit can cause the parts to corrode rapidly. Remove the cleaned components from the washer as soon as possible after the cycle is complete

c. Set the wash cycle timer for 3 to 30 minutes depending on the type of soil to be removed, the quantity of soils on the parts, and the number of parts involved and based on the manufacturer's recommendations in the equipment operating manual. Light degreasing may require only 3 minutes, while heavy soils and baked on grease may require a full 30 minute cycle. Always run the aqueous parts washer for the entire programmed time cycle, and then allow the cleaned components to cool for a short time before removing and handling them.

d. If the cleaned components are to be subjected to an immediate in line process such as fluorescent penetrant inspection, surface treatment and/or painting, or follow-on precision cleaning, rinse the part with fresh tap water and dry them thoroughly.

e. Apply a film of MIL-C-81309, Type II, MIL-L-87177, Type I, Grade B, or MIL-PRF-16173, Grade 3, followed by a film of MIL-PRF-16173, Grade 4 on bare steel parts that have been cleaned and rinsed and will be left unprotected from the environment without further processing for a period of time.

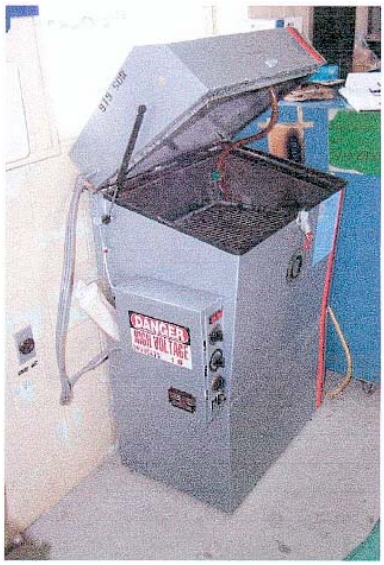

Figure 3-4. Top Loading Type

3.4.10 Miscellaneous Equipment. Accessories and consumable materials for manual cleaning operations are listed in Appendixes A and B, and include the following important items:

3.4.10.1 The 3M Co. PN 251 Aircraft Washing Kit (refer to Figure 3-6) is a conformable plastic device/head with a surface for attaching non-abrasive cleaning pads and sponges. It attaches to a mop handle for cleaning aircraft surface areas.

3.4.10.2 A-A-3100 Non-Metallic Cleaning and Scouring Pads are crimped polyester fiber pads for use with detergents and solvents for cleaning aircraft, missile, and equipment surfaces. These pads can also be attached to a 3M Co. PN 251 Aircraft Washing Kit.

3.4.10.3 MIL-B-23958 and A-A-3080, Non-Metallic Bristle Brushes are used to agitate MIL-PRF-87937 and MIL-PRF-85570 detergent cleaners on aircraft, missile, and equipment surfaces during cleaning operations.

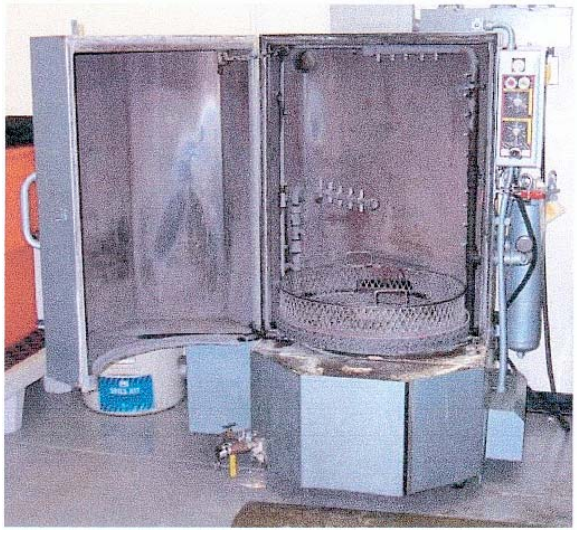

Figure 3-5. Front Loading Type

3.4.10.4 CCC-C-440, Type I or II, Class 1 or 2 Cheesecloth, CCC-C-46, Type I, Class 7 Non-Woven Wiping Cloths, A-A-59323, Type I or II Low Lint Cleaning Cloths, and AMS 3819A, Class 1 or 2, Grade A or B Cleaning Cloths are used for cleaning critical areas where an exceptionally clean cloth is required, such as solvent cleaning prior to painting, adhesive bonding, or sealing.

3.4.10.5 A-A-2806, or equal, Plastic Pump-Spray Bottles are used for applying diluted MIL-PRF-87937, Type I or IV, and MIL-PRF-85570, Type I or II, or concentrated MIL-PRF-87937, Type III and MIL-PRF-85570, Type V cleaning solutions to small, localized areas being cleaned.

3.5 CLEANING PROCEDURES.

Where high outdoor temperatures are encountered (80° F /27° C and above) and an indoor wash rack is not available, cleaning operations should be scheduled for early morning, late afternoon, or night. Wet aircraft exteriors with fresh water before applying cleaners to cool surfaces and help prevent fast evaporation and drying of cleaners during hot weather. For cold weather procedures, refer to Paragraph 3.5.2.6.

NOTE

Only water meeting the requirements in Paragraph 3.1.1, steps f (1) through (9) shall be used in cleaning operations (washing and rinsing) on aircraft, missiles, and equipment.

3.5.1 Warnings and Cautions. The following warnings and cautions shall be observed during aircraft cleaning operations:

3.5.1.1 Electrical.

WARNING

- Aircraft and/or other equipment shall not be washed, cleaned, or inspected on an outdoor washrack when an electrical storm is in the immediate area.
- Open all circuit breakers associated with battery power (refer to applicable aircraft manuals) prior to application of flammable solvent cleaners.
- In order to guard against the danger of static electricity, aircraft shall be electrically grounded during all cleaning operations and when moored and parked.
- Before cleaning electrical and avionic equipment, make sure electrical power is disconnected. Injury or death may otherwise result.

3.5.1.2 Personal Protection.

WARNING

- Wear rubber gloves, chemical or splash proof goggles, and water resistant boots during cleaning operations using MIL-PRF-87937, MIL-PRF-85570, MIL-C-43616, or MIL-PRF-85704 cleaning compounds. If cleaner is splashed in eyes, rinse thoroughly with fresh water for 15 minutes and report to medical facility. Remove clothing saturated with cleaning solution immediately and flush exposed skin areas with fresh water.
- Cleaning solutions are slippery. Use maintenance stands where practical. A safety harness and safety lines shall be used when standing on upper surfaces of aircraft during cleaning operations.

Consult the local safety office and bioenvironmental engineer for personal protective equipment (PPE) requirements.

3.5.1.3 Use of solvents.

WARNING

- Do not use synthetic wiping cloths with flammable solvents, such as TT-N-95 aliphatic naphtha.
- Solvents shall not be applied with atomizing spray equipment. This is not only hazardous, but violates environmental regulations in most areas.
- Keep all solvents away from open flames and any live electrical circuit or sources of electrical arcing. Ensure that residual solvent is removed from aircraft, engine bays, and equipment.
- Use solvents only in well-ventilated areas. Wear chemical resistant rubber gloves and chemical or splash proof goggles when using solvents. Avoid skin contact. Consult the local safety office and bioenvironmental engineer regarding respiratory protection.
- Do not mix cleaning compounds with any solvent such as A-A-59601 and MIL-PRF-680. The added solvents create a fire hazard, a serious disposal problem, and can damage nonmetallic materials.

3.5.1.4 Use of Cleaners.

CAUTION

- Steam shall not be used for cleaning aircraft, missiles, or their components. Steam can damage and/or deteriorate sealants, paint coatings, and elastomers.
- Do not apply MIL-PRF-87937 (except Type IV) or MIL-PRF-85570 (except Type II), MIL-C-43616, or MIL-PRF-85704, Type I cleaning solutions or any unauthorized solvents to electrical wiring or plastic aircraft canopies, as they may cause damage to insulation or crazing of transparent surfaces.
- Do not use cleaning compounds at higher concentrations than those recommended. Do not allow cleaning solutions to dry on aircraft surfaces. Such practices cause streaking and can damage aircraft finishes and components.

3.5.1.5 Water Intrusion.

CAUTION

- To prevent entrapment of water, solvents, and other cleaning solutions inside of aircraft, missile, and equipment parts and structural areas, all drain holes, flapper valves, etc., shall be opened before washing to ensure that proper drainage occurs.
- Do not wash or rinse aircraft, missiles, or equipment with a solid stream of water. Use a soft spray pattern to avoid damaging fragile sections or causing water intrusion.
- Do not direct water streams at pitot tubes, static ports, vents, etc. These areas shall be adequately protected by masking prior to starting a cleaning operation.
- Relubricate all fittings and other lube points in areas where cleaning compounds have been applied, such as wheel wells, flap wells, flight control wells, etc. Ensure that these areas are adequately drained and check the system peculiar aircraft manual to determine lubrication requirements.

3.5.1.6 Oxygen Systems.

CAUTION

Observe warnings and cautions in system peculiar oxygen system manuals.

3.5.1.7 Special Precautions.

CAUTION

Use extreme care when cleaning around radomes, access doors to integral fuel tank cells, light fixtures, electrical components, antennas, etc. These areas may be damaged by cleaning solutions and equipment.

3.5.1.8 Preparation for Cleaning.

WARNING

Open all circuit breakers associated with battery power (refer to applicable system peculiar aircraft manuals) prior to application of any flammable solvent.

CAUTION

Cover acrylic or polycarbonate canopies and windows on aircraft during washing operations to prevent accidental scratching or crazing by cleaning compounds and equipment. Cover canopies and/or windows with A-A-50129 flannel cloth. Cover the flannel cloth on the canopies and/or the windows with MIL-PRF-131, Class 1 barrier material (plastic side toward aircraft) and tape it to the canopy and/or window frames, or the painted surface near them using AMS-T-21595, Type III masking tape or AMS-T-22085, Type II preservation tape. Do not apply the tape directly to the transparent surfaces.

3.5.1.9 Pre-Wash Lubrication Point Protection. To protect against cleaning solution entrapment, inspect all lubrication points having exposed lubrication fittings. Prior to masking any components or parts, remove all foreign matter from joints, fittings, and bearing surfaces, using a CCC-C-46, non-woven cleaning cloth or an AMS 3819, Class 1, Grade B cleaning cloth. Wipe up all spilled or excess oil and grease. Mask all fittings which will be exposed to wash solutions with MIL-PRF-131, Class 1, barrier material and AMS-T-21595, Type III masking tape as needed. See the applicable system peculiar maintenance manuals and cards, and Paragraph 3.6 for location of lubrication points.

NOTE

Consult the system peculiar aircraft (-23) corrosion manual for cleaning operation masking requirements for specific aircraft in addition to those in this manual.

3.5.1.10 Water/Cleaning Compound Intrusion. Take the following steps to prevent water/cleaning compound intrusion during cleaning operations:

a. Close all doors, removable panels, and emergency openings, and seal and/or mask their edges if required to prevent leakage into interior areas. Mask all areas where cleaning solutions and water can become entrapped and cause corrosion and other damage to aircraft and missile components and structure, such as pod doors, areas around thrust rings, radomes, optical glass, nirdomes, etc. Use prefabricated covers and/or MIL-PRF-131, Class 1 barrier material and AMS-T-21595, Type III masking tape or AMS-T-22085, Type II preservation tape for masking.

b. Check drain holes. Make sure that all drain holes are clean by inserting a probe, such as a pipe cleaner, into them except for pressurized flapper valves. Refer to system peculiar aircraft maintenance manuals or (-23) corrosion manuals for location of drain holes.

CAUTION

Make sure that pitot static tubes and static vents/openings/ports are not fouled by tape adhesive transfer. Cover them as directed in step c. below.

c. Cover all static vents, openings, and ports with circular cut pieces of MIL-PRF-131, Class 1 barrier material (plastic side toward the aircraft surface) and hold in place with AMS-T-21595, Type III masking tape or AMS-T-22085, Type II preservation tape. Refer to system peculiar aircraft and missile maintenance manuals and (-23) corrosion manuals for locations of static vents, openings, and ports to be masked. Place covers on pitot static tubes. If covers are not available, a piece of MIL-PRF-131, Class 1 barrier material may be cut and taped in place on the pitot static tube with AMS-T-21595, Type III masking tape or AMS-T-22085, Type II preservation tape. Covers and masking must be removed prior to release of aircraft for flight. Particular care shall be taken to ensure that static vents, openings, and ports and pitot static tubes are not fouled by tape adhesive transfer. In the event of significant adhesive transfer, clean with TT-N-95 aliphatic naphtha.

CAUTION

Do not use a direct spray of water or cleaning compound on carbon brakes, wheels or wheel hubs. If wheel bearings are suspected of contamination, corrosion, or loss of lubricant, remove wheel bearings and relubricate in accordance with applicable system peculiar maintenance instructions and TO 4W-1-61. If carbon brakes are suspected of contamination, decontaminate per applicable system peculiar maintenance instructions and TO 4B-1-32.

d. Cover wheels with covers designed and manufactured for the specific aircraft or locally fabricated covers to prevent water/cleaning compound contamination of wheel bearings and carbon brakes. Carbon brakes have temporarily reduced performance when subjected to water, deicers, degreasers, and oil. Protect brakes from direct impingement of fluids as much as practical during maintenance and aircraft cleaning operations. Weak or spongy brakes (and in some cases, smoke) may result until the contaminants are burned off (normally one flight/take off and landing).

3.5.2 Cleaning Methods.

WARNING

- Wear rubber gloves, chemical or splash proof goggles, and water resistant boots during cleaning operations using MIL-PRF-87937, MIL-PRF-85570, or MIL-PRF-85704 cleaning compounds. If cleaner is splashed in eyes, rinse thoroughly with fresh water for 15 minutes and report to medical facility. Remove clothing saturated with cleaning solution immediately and flush exposed skin areas with fresh water.
- Open all circuit breakers associated with battery power (refer to applicable system peculiar aircraft manuals) prior to application of flammable solvents.
- There are potential health risks associated with cleaning compounds if proper handling, mixing, and usage instructions are not followed. Consult the specific cleaning compound MSDS and the local safety office and bioenvironmental engineer for specific information.

The methods for cleaning aircraft, missiles, and equipment may vary depending upon the type of aircraft, missile, or equipment involved. Use the following methods for cleaning aircraft, missile, and equipment exterior surfaces. Refer to Table 3-2 for instructions on specific areas and components.

3.5.2.1 Alkaline Detergent and/or Solvent Emulsion Cleaning, Painted and Unpainted Surfaces; Fresh Water Readily Available. Use procedures in Paragraph 3.5.2.1.1, steps a through g.

CAUTION

Do not use A-A-58054 abrasive mats for cleaning operations on painted or unpainted surfaces.

3.5.2.1.1 Accomplish cleaning operations in planned steps starting with the lowest and most inboard surfaces to be cleaned and work upward and outward. Dilute and/or mix cleaning compounds as recommended in Table 3-2.

a. Flush aircraft, missile, or equipment surfaces with fresh water when necessary to reduce skin temperature. Streaking will occur if cleaning solutions run down on and/or dry on hot painted or unpainted surfaces.

CAUTION

- MIL-C-43616 solvent emulsion cleaner and A-A-59601 and/or MIL-PRF-680 solvents shall not be used on non-polyurethane paint systems and markings as the solvent materials will cause them to fade.
- Consult the base bioenvironmental engineer before using these solvent materials as they can create waste disposal problems.

b. Apply properly mixed/diluted MIL-PRF-87937, Type I, II, or IV, MIL-PRF-85570, Type I or II, or MIL-C-43616 cleaning compound solution from a bucket, spraying equipment (including the high pressure type if approved by the aircraft SPD and/or the missile or equipment SPM), or foaming equipment. Scrub surfaces with a 3M Co. PN 251 Aircraft Washing Kit (Appendix B; Item 1) fitted with a cleaning pad (Appendix A; Item 38; refer to Figure 3-6), one of the 3M Co. Improved Wash Pads fitted to its appropriate holder and handle (Appendix A; Item 39), or with a cleaning brush. Allow the solution to dwell on the surface for 5 to 10 minutes. Start at the lower and inboard edges of the surfaces being cleaned working upward and outward (refer to Figure 3-7).

NOTE

MIL-PRF-87937, Type I materials contain terpenes. Aircraft SPD and/or missile or equipment SPM restrictions may apply. Consult system peculiar maintenance manuals.

c. Rinse away the loosened soil and cleaner with fresh, heated, tap water at a temperature of 120° F/ 49° C minimum to 140° F/60° C maximum. Use a rubber padded shut-off spray nozzle (refer to Figure 3-8) to rinse the cleaner and loosened soil from aircraft, missile, or equipment surface. Adjust the nozzle to provide a light to coarse fan spray directed at an angle between 15° and 30° from the surface. Start at the outboard and upper edges of the area being rinsed working inward and downward. Continue rinsing until all evidence of cleaner and soils have been removed from aircraft, missile, or equipment. Small areas may be rinsed with water applied with cloths or sponges which are rinsed out frequently, and then dried with a clean cloth or sponge, or allowed to air dry.

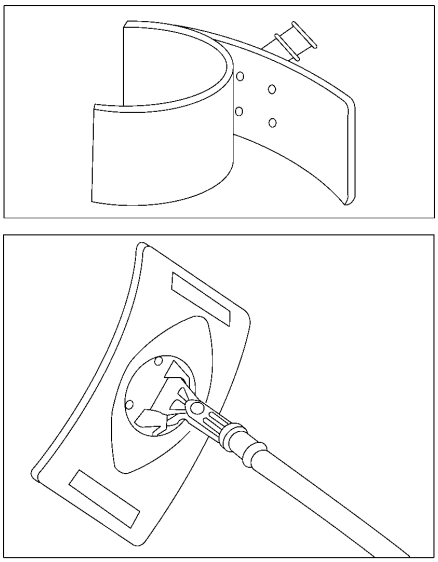

Figure 3-6. Use of Aircraft Washing Applicator

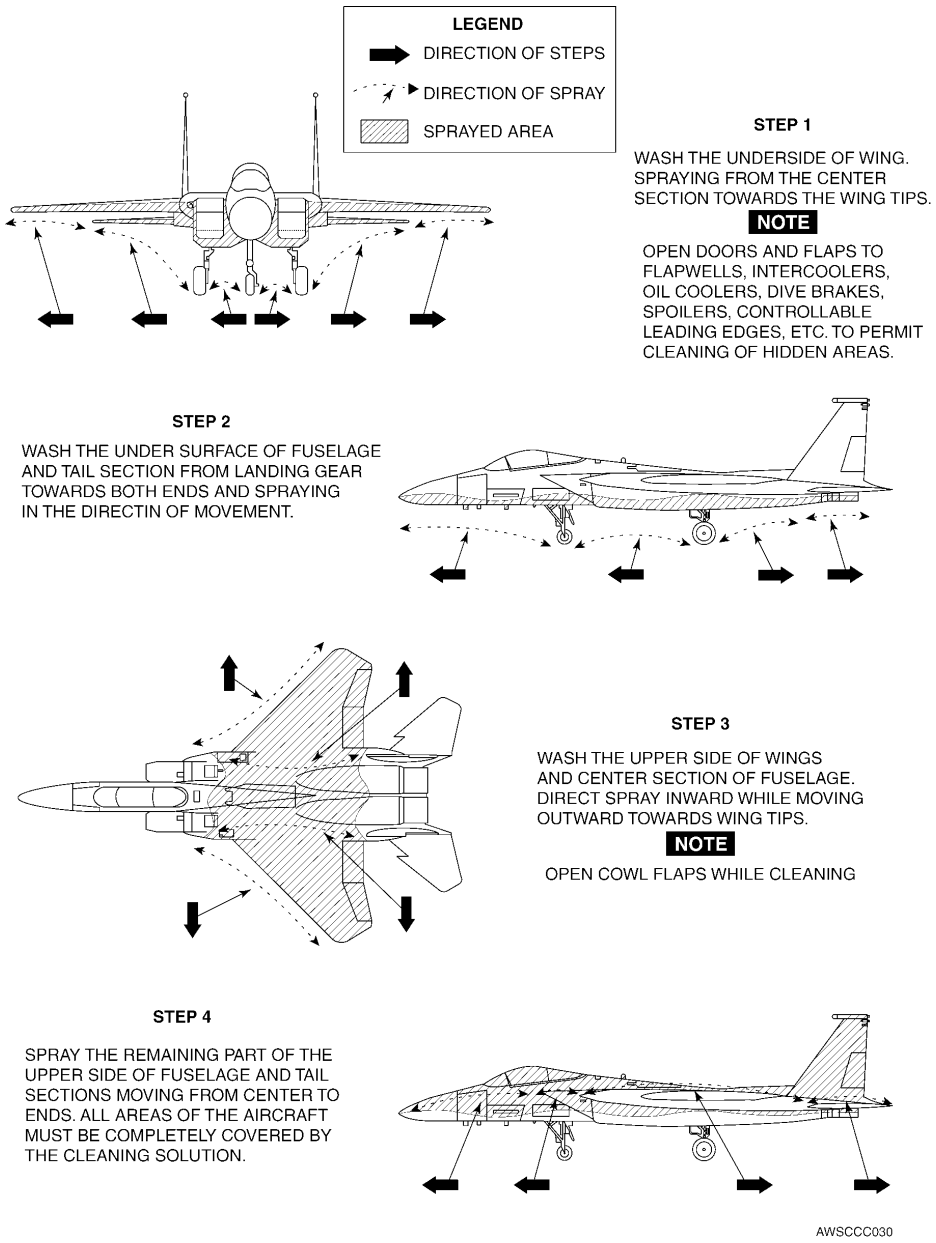

Figure 3-7. Aircraft Cleaning Procedure

NOTE

If hot water is unavailable, regular tap water may be used for rinsing; but it takes a great deal longer, requires much more water, and is not as efficient in removal of residue from the surface. Hot water rinsing is known to reduce man-hours required for rinsing by approximately 20

.

d. For aircraft, or equipment painted with a low gloss/flat and/or camouflage paint scheme, ground-in soils (boot marks, smudges, etc.) can be cleaned with MIL-PRF-85570, Type IV spot cleaner. Apply with a cleaning pad or sponge; and after several minutes dwell time, scrub these areas with the pad or sponge, and rinse thoroughly. When the rubber particles in this cleaner are rubbed with the pad, removable soils are erased from the low areas or depressions in the surface of the paint

e. Clean wheel, flap, aileron, elevator, rudder wells and other heavily soiled areas which can tolerate water rinsing with MIL-PRF-87937, Type III, or MIL-PRF-85570, Type V gel cleaner. These cleaning compounds may be sprayed on using a hand operated pump spray. Allow to dwell for 5 to 15 minutes, and then rinse thoroughly with a rubber padded shut-off fan spray nozzle adjusted to provide a light to coarse fan spray (refer to Figure 3-8).

f. Clean painted and unpainted surfaces on aircraft, missiles, and/or equipment that are protected/treated with CPC's with MIL-C-43616, Class 2 (aerosol type) solvent emulsion cleaner applied by spray or A-A-59601, Type II or III, or MIL-PRF-680, Type II or III degreasing solvents applied with a brush, cloth, sponge, or non-atomizing spray. Rinse the area thoroughly with fresh tap water (preferably hot water), and then wash by alkaline detergent cleaning per steps b and c above.

NOTE

MIL-PRF-87937, Type III or MIL-PRF-85570, Type V gel cleaning compounds may be used as alternates to clean CPC coated areas per procedure in step e above.

g. If surfaces are not clean at this point, repeat the cleaning process.

3.5.2.2 Waterless Wipe Down. Waterless wipe down procedures for spot cleaning will be used only when water is not available for rinsing, or when cold weather prevents the use of water. The waterless wipe down method for removal of soils and corrosive salt residues is as follows:

a. Using a plastic spray bottle, apply MIL-PRF-87937, Type I or IV, or MIL-PRF-85570, Type I or II, (mixed one part cleaner to nine parts water) to the exterior surfaces of the aircraft (several square feet at a time).

NOTE

MIL-PRF-87937, Type I materials contain terpenes. Aircraft SPD and/or missile or equipment SPM restrictions may apply. Consult system peculiar maintenance manuals.

b. After 30 seconds, scrub, then wipe cleaner and soil from the surface with the clean CCC-C-46, Type I, Class 7 or AMS 3819, Class 1, Grade B cloth.

c. Rinse the cleaned surface with fresh water when it becomes available and/or weather permits.

3.5.2.3 Alkaline Detergent Cleaning with Only Limited Fresh Water Available. Use the following procedure, only when sufficient rinse water is not available:

a. Mix either of the following in a bucket depending on the type of soil to be removed:

(1) One part MIL-PRF-87937, Type I, II, or IV, or MIL-PRF-85570, Type I or II cleaning com-pound and 16 parts water for removal of light to moderate soils; or

(2) One part MIL-PRF-87937, Type I, II, or IV, or MIL-PRF-85570, Type I or II cleaning com-pound and 4 parts water for removal of heavy soils.

NOTE

MIL-PRF-87937, Type I materials contain terpenes. Aircraft SPD and/or missile or equipment SPM restrictions may apply. Consult system peculiar maintenance manuals.

b. Apply the cleaner with a cleaning pad, sponge, cloth, or cleaning brush one small area at a time (10 to 20 SQFT).

c. Scrub the area with the applicator from step b, and then wipe clean with a CCC-C-46, Type I, Class 7, or AMS 3819, Class 1, Grade B cloth.

d. For very stubborn soils, clean with A-A-59601, Type I or II, or MIL-PRF-680, Type I or II degreasing solvent, and then scrub with one of the above solutions .(1)

3.5.2.4 Solvent Cleaning. The use of MIL-PRF-87937, Type III, or MIL-PRF-85570, Type V cleaning compounds for cleaning very stubborn or exceptionally oily areas on exhaust tracks, landing gears, wheel wells, control surface wells, and engine nacelles will normally be sufficient. When these materials do not completely clean these areas, A-A-59601, Type II or III, or MIL-PRF-680, Type II or III can be used in small quantities. The quantity used shall be limited to the minimum necessary to accomplish the required cleaning. Remember that solvents will burn intensely once ignited, so limit the amount of solvent available at the aircraft, missile, or piece of equipment to a maximum of three gallons under the use and/or control of each authorized person involved in

the solvent cleaning operation. Each authorized person shall be thoroughly familiar with applicable safety precautions and disposal requirements/information. The solvent dwell time on painted surfaces shall be held to a minimum of 10 to a maximum of 15 minutes to prevent softening of the paint. Any dirty solvent draining off the surface during the cleaning operation shall be controlled to prevent unauthorized entry into the sewer. All solvent spillage shall be cleaned up per local regulations/directions. In no instance shall solvents be allowed to drain into or enter a public sewer or otherwise be allowed to contaminate streams or lakes. These guidelines shall be followed when using A-A-59601, Type II or III, or MIL-PRF-680, Type II or III solvents:

a. Use only in areas approved by the local safety office.

b. Ensure that the area within 50 feet of the solvent cleaning operation is clean and remains clear of all potential ignition sources.

c. Use only explosion-proof electrical devices and power equipment. Power units used in servicing shall be placed upwind and beyond the 50 feet clearance. Ensure that the aircraft, missile, or equipment is properly grounded.

d. No smoking shall be allowed in the solvent cleaning area.

e. Mixing of solvents with other chemicals, cleaning compounds, water, etc., is strictly prohibited except as specified by this manual.

f. Suitable fire extinguishing equipment shall be available to the solvent cleaning area.

g. Wear ANSI Z87.1, Type II goggles, protective wet weather clothing, solvent resistant gloves, boots, and head covering. Use a respirator fitted with organic vapor cartridges when working in an enclosed area. Ensure that good ventilation is maintained. Consult the local safety office and bio-environmental engineer for PPE requirements.

h. Apply A-A-59601, Type II or III, or MIL-PRF-680, Type II or III solvents using a pad, cloth, or brush. Clean up solvent spills as they occur.

i. Ensure that no solvent is trapped or has entered the equipment interior. Remove by wiping with clean cotton wiping cloths or by blowing dry, using clean, low pressure air (10-15 PSI).

j. Collect waste solvents and solvent wetted wiping rags and dispose of them per local regulations/directions.

k. After cleaning with A-A-59601 or MIL-PRF-680 solvents, re-clean the area using procedures in Paragraph 3.5.2.1 to remove residue left by the solvents.

3.5.2.5 Interior Cleaning (Vacuum). Remove dirt, dust, small loose objects, paper, etc., from an area with an industrial or domestic type vacuum cleaner. A soft bristle brush on the end of the inlet tube/hose of the vacuum cleaner will aid in removal of soils.

a. Inspect aircraft floor boards and bilge area underneath the floor boards during depot level maintenance and as may otherwise be required during field level maintenance for conditions that would necessitate cleaning or corrosion removal and treatment. Particular attention shall be given to urinal and latrine areas.

CAUTION

Accidental spills shall be investigated immediately after occurrence to determine if the spilled materials are corrosive. Spills determined to be corrosive shall be neutralized as soon as possible per directions in AFM 71-4 followed by cleaning per procedures in Table 3-2. Failure to comply can result in extensive corrosion damage and possible unsafe conditions for operation of the aircraft, missile, or equipment.

b. When it is determined that harmful contamination, (i.e., dirt spillage, foreign material, etc.) is present in an aircraft bilge area, remove the floor boards as necessary to allow proper cleaning of the bilge area.

c. Clean the aircraft bilge area by vacuuming up all loose foreign material, dirt, etc., The vacuum removal of dirt or soil may be aided by agitating with the brush. Be careful not to sweep or wipe the dirt, etc., into oily or wet areas.

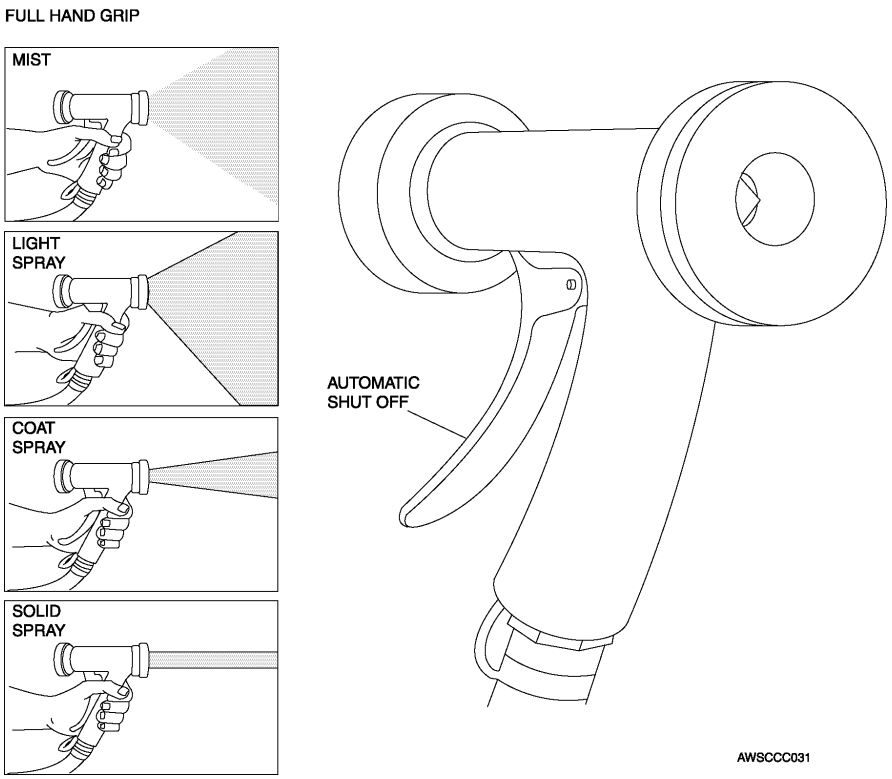

Figure 3-8. Automatic Water Spray Nozzle

WARNING

Ensure there is adequate ventilation when using A-A-59601, Type II or III, or MIL-PRF-680, Type II or III solvents and be sure the bilge and/or other areas are properly ventilated (blown out) before floor boards are reinstalled or closed. Warning signs shall be conspicuously placed at all aircraft entrances to indicate that combustible materials are being used. The guidelines cited in Paragraph 3.5.2.4 for solvent cleaning procedures apply.

d. Clean oily areas and/or spots by wiping them with a clean cloth dampened with A-A-59601, Type II or III, or MIL-PRF-680, Type II or III solvent followed immediately by drying with a clean dry cloth. Do not oversaturate the cloth used for applying the solvent because this may result in the solvent puddling or entering recessed areas and creating a fire hazard. Precautions shall be taken when using these solvents around electrical equipment to prevent entry.

CAUTION

Before starting the following cleaning operation, be sure that the spray or other method of application will not result in moisture damaging any components, especially electrical components. Before using a spray method, ensure all drain holes are open, that the fluid materials will drain, and that the cleaning solution will not be forced into inaccessible areas. Do not apply the solution to any moisture absorbing material such as insulation, sponge rubber (open cell), felt, etc.

e. If further cleaning is required, use a solution of 1 part MIL-PRF-87937, Type II or IV, or MIL-PRF-85570, Type II mixed with 9 parts fresh water applied by spray, mop, sponge, or brush. Use this solution only if it can be adequately rinsed and/or removed from the surface.

f. After applying the cleaning solution, allow dwell time of approximately 10 minutes, agitate the solution on the surface with a non-metallic bristle brush, and flush or rinse with clean water. Check drain holes to ensure that they are open and that the cleaning solution and water are draining properly. Remove any remaining water using clean cloths. The surface shall then be thoroughly dried by blowing warm air over the surface or wiping with clean, dry cloths.

g. In those areas where the above procedures cannot be used due to lack of drainage, possible damage to components, etc., hand cleaning procedures will have to be used. Apply a solution of 1 part MIL-PRF-87937, Type II or IV, or MIL-PRF-85570, Type II mixed with 9 parts water to the surface with a rag or sponge wetted with the solution and then agitate it with the applicator. Immediately following agitation of the solution, rinse the area by wiping it with a rag wetted with clean water and then wipe it dry with a clean, dry rag. This procedure may have to be repeated several times on extremely soiled areas.

h. If corrosion is encountered and/or paint is removed, treat the corrosion per this manual and the applicable system peculiar maintenance manual, and touch-up the paint system per TO1-1-8 and the applicable system peculiar maintenance manual before the floor boards are replaced or area is closed.

3.5.2.6 Low Temperature Cleaning. Do not perform routine scheduled cleaning when the ambient temperature is 40° F (4° C) and below. Instead, aircraft, missiles, or equipment shall be cleaned in an indoor, heated wash rack. However, if the ambient temperature is between 40° F (4° C) and 32° F (0° C) and such a facility is not available, exterior areas/surfaces on aircraft, missiles, or equipment contaminated with corrosive materials, such as runway deicing agents and salt water shall have these areas/surfaces cleaned outdoors using the waterless wipe down method in Paragraph 3.5.2.2. Normal cleaning solutions cannot be used in freezing weather of 32° F (0° C) and below; so under these conditions, the following procedures shall be used for cleaning:

Table 3-3. Recommended Dilution of Low Temperature Cleaner

AMBIENT TEMPERATURE	DILUTION RATIO (Parts mixture: parts water)
+30° F and above	1:4
+10 F to +30° F	1:2
+10° F and below	1:1

WARNING

SAE AMS 1424, Type I aircraft deicing/anti-icing fluid is mildly toxic. Contact with skin and eyes shall be avoided. Do not inhale deicing fluid mist. Spray equipment operators and personnel using brush applicators should stay on the windward side of the aircraft and/or equipment to be cleaned during cleaning solution application. Chemical, splash-proof goggles and wet weather gear, including boots and gloves, shall be worn by all maintenance personnel involved in low temperature cleaning operations.

CAUTION

TT-I-735 isopropyl alcohol or any other alcohol shall not be used for deicing acrylic plastic canopies. Use Type AMS 1424, SAE Type I aircraft deicing/anti-icing fluid for these applications.

a. If necessary, deice the aircraft, missile, or equipment per procedures in TO 42C-1-2 and/or the applicable system peculiar maintenance manual.

b. Solvent clean heavily soiled areas of aircraft by wiping or brushing with A-A-59601, Type II or III, or MIL-PRF-680, Type II or III degreasing solvent using procedures in Paragraph 3.5.2.2.

c. To make a low temperature cleaner, mix ½ pint of concentrated/undiluted MIL-PRF-87937, Type IV or MIL-PRF-85570, Type II cleaning compound into one gallon of the ready-to-use (RTU) SAE AMS 1424, Type I Aircraft Deicing/Anti-Icing Fluid or into one gallon of a solution of the concentrated form of the SAE AMS 1424, Type I Aircraft Deicing/Anti-Icing Fluid diluted 1

to 1 with water. If necessary, warm either of these cleaning compound materials until they can be easily poured into the deicing/anti-icing fluid. Mix thoroughly.

d. Dilute this mixture as required by the ambient temperature involved per Table 3-3 and mix thoroughly.

e. Scrub the aircraft, missile, or equipment using a brush, cloth, or aircraft washing kit.

f. Rinse by deicing as in step a. Heated deicing/anti-icing fluid mixtures will speed up the rinsing process.

3.5.3 Clear Water Rinsing of Aircraft.

CAUTION

- Do not rinse aircraft with a solid stream of water. Use a soft, spray pattern to avoid damaging fragile sections or causing water intrusion. Water must not be directed at pitot tubes, static ports, vents, etc. Critical areas shall be adequately protected with ground plugs, covers, etc.
- Application of water in wheel wells, flap wells, flight control wells, etc., may necessitate the relubrication of some components/areas. Ensure that these areas are adequately drained and check the system peculiar aircraft maintenance manuals to determine lubrication requirements.

NOTE

- Clear water rinsing does not satisfy aircraft washing requirements.
- Only water meeting the requirements in Paragraph 3.1.1, steps f (1) through (9) shall be used for clear water rinse operations.

3.5.3.1 Requirements. As directed by the requirements in Paragraph 3.2.3, aircraft shall be clear water rinsed to remove salt contamination from aircraft surfaces caused by operations near salt water. Most salt deposits are readily dissolved and/or dislodged and flushed away by rinsing. Rinsing can be done in a taxi-through facility or by direct manual spraying.

3.5.3.2 Taxi-Through Rinsing. Deluge rinse facilities (bird baths) are automatic installations located in a taxiway area for use by aircraft after flight through salt air. These installations provide multiple jet sprays of fresh water to cover the entire aircraft exterior surface to rinse off salt and water soluble contaminants. Such facilities should be used as frequently as possible per the requirements in Paragraph 3.2.3.

3.5.3.3 Manual Application. Fresh water can be applied from a hand held hose or piece of spraying equipment. The force or pressure used to apply the water is not as critical as the amount of water. Satisfactory results are achieved with an amount of water that will create a full flowing action over the surface. This requires a minimum of eight gallons per minute (GPM) of water at a nozzle pressure of 25 PSI minimum to 175 PSI maximum.

3.5.3.4 Rinsing Procedures. Clear water rinsing shall be accomplished as follows:

a. Direct water at an angle of 15° to 30° from the surface. Ensure that sufficient water flow is achieved on all surfaces.

b. Begin rinsing on lower surfaces and work upward starting with the lower wing surfaces, then the lower fuselage, and the lower horizontal stabilizer surfaces. Then rinse from the top down, starting with the upper and lower surfaces of the horizontal stabilizer on T-tail aircraft, the vertical stabilizer surfaces, then the upper fuselage, upper wing surfaces, and upper horizontal stabilizer surfaces. (Refer to Figure 3-7).

3.5.4 Post Cleaning Procedures.

WARNING

Do not use synthetic wiping cloths with flammable solvents as these solvents can dissolve them.

3.5.4.1 Post Cleaning Task Sequence. Strict compliance with the following post cleaning procedures is essential, and they shall be done in the following order:

a. Remove covers and masking from all static vents, pitot static tubes, air ducts, heater ducts, etc.

b. Remove tape from all other openings sealed with masking tape.

c. Remove all tape adhesive residues with TT-N-95 aliphatic naphtha or TT-I-735 isopropyl alcohol.

d. Ensure all drain holes are open by inserting a probe, such as a pipe cleaner.

e. Ensure that all areas that accumulate water have been drained and/or otherwise dried. Whenever this is a recurring problem, specialized procedures shall be developed and implemented to remove entrapped water and other fluids to prevent their accumulation.

CAUTION

An effective corrosion prevention and control program requires that prescribed preservation and lubrication procedures be accomplished as soon as possible after a cleaning operation to prevent/minimize the occurrence of corrosion.

f. Upon completion of all cleaning operations, lubricate all exposed static joints and inject lubricant into all lube fittings in the areas cleaned in accordance with Paragraph 3.6 and applicable system peculiar maintenance manuals to displace any entrapped water or cleaning materials that could cause corrosion and failure of lubricated parts if they remained.

g. Apply preservatives/corrosion preventive compounds (CPC's) to components in the area cleaned in accordance with Paragraph 3.7 and applicable system peculiar maintenance manuals as necessary. Cleaning compounds tend to remove preservatives, making previously protected surfaces vulnerable to corrosion.

3.5.5 Treatment and Disposal of Wash Rack Waste.

NOTE

Cleaning solutions which remove greases, oils, and surface contamination from aircraft, missiles, equipment, and components may exceed discharge concentration limits for oil and grease (especially where oil/water separators are not installed or not operating properly), naphthalene (from cleaners containing aromatic hydrocarbons), chromium, cadmium, nickel, or other heavy metals (from cleaning operations involving engines or plated parts). If your wash rack is a source of hazardous waste, consult the base safety office and/or bioenvironmental engineer to determine corrective action. Take precautionary measures to prevent wash rack waste from contaminating lakes, streams, or other natural environments. Some chemicals used for cleaning require treatment or other special controls prior to disposal.

3.5.5.1 The disposal of materials shall be accomplished in accordance with applicable directives and in a manner that will not result in the violation of local, state, or federal pollution directives.

3.5.5.2 To reduce the problems associated with disposal and the actual cleaning process, all work shall be accomplished on an approved wash rack. The only exception to this requirement shall be for those facilities which are temporarily established to support combat operations or special missions.

3.5.5.3 Aircraft wash rack cleaning waste shall receive the equivalent of secondary sewage treatment. When MIL-PRF-85704, Type I or MIL-C-43616, Class 1 solvent emulsion cleaning solutions are used, waste shall be released so that the total effluent entering the waste treatment plant does not contain more than the amount limited by local environmental regulations or 100 parts per million (ppm) of cleaning compound.

3.5.6 Fungus Growth Removal.

WARNING

A 50-50 by volume mixture of isopropyl alcohol and water is flammable with a flash point of 60° F. Use only with adequate ventilation, and comply with guidelines for solvent cleaning in this chapter.

CAUTION

Do not use isopropyl alcohol on transparent acrylic or polycarbonate plastics used for aircraft canopies and windows or methacrylate plastic (plexiglas) components as it can cause them to craze.

Fungus growth (mildew and mold) occurs on the surface of organic materials (plastics, paper, organic coatings/paints, etc.) and inorganic materials (metals, concrete, etc.) particularly in warm, damp/humid climates. Fungus growths must be removed to prevent corrosion of metals and deterioration of other materials caused by the fungus by-products.

3.5.6.1 Fungus Removal from Plastics. Since the term plastics includes a wide variety of different chemical compounds with a wide variety of chemical and physical properties, one type can be cleaned by a method which can deteriorate another type. In general, organic solvents, mineral spirits, and paint thinners should not be used to clean plastics or be allowed to come in contact with them. Except as noted above, remove fungus from plastics by scrubbing the contaminated area with a lint-free cloth or a sponge wet with a 50-50 by volume solution of TT-I-735, Grade A or B, and fresh tap water with two (2) fluid ounces of P-D-410, Type II detergent per gallon of solution mixed in. Wipe off the residue with a lint-free cloth wet with fresh tap water and wipe dry with a clean dry cloth. Clean fungus from transparent plastics and plastic electrical insulation as follows:

WARNING

TT-N-95 aliphatic naphtha is flammable and toxic to the skin, eyes, and respira-tory tract. Keep away from all sources of ignition. Avoid skin and eye contact. Good general ventilation is adequate.

CAUTION

TT-N-97 aromatic naphtha shall not be used to clean transparent plastics as it can attack and damage them.

a. Remove fungus from acrylic, polycarbonate, and methacrylate (plexiglas) transparent plastic com-ponents with a lint-free cloth or sponge wet with TT-N-95 aliphatic naphtha, and then wipe dry with a clean, dry cloth. If polishing is required, rub the area with SS-P-821, Grade F or finer pumice ground abrasive. Consult TO 1-1A-12 for details on polishing transparent plastics.

b. Remove fungus from plastic electrical insulation by wiping with a lint-free cloth or sponge wet with a 50-50 by volume solution of TT-I-735, Grade A or B isopropyl alcohol and fresh tap water, and then wipe dry with a clean, dry cloth. Consult TO 1-1-689 for additional information on cleaning electrical insulation.

3.5.6.2 Fungus Removal from Metal Surfaces. Remove fungus from all metal surfaces other than electrical connectors by first wiping the contaminated area with a lint-free cloth or sponge wet with TT-I-735, Grade A or B isopropyl alcohol followed by cleaning per the standard methods in Table 3-2 for the type of area involved. Remove fungus from electrical connectors as follows:

a. Remove fungus from exterior surfaces of electrical connectors by wiping with a lint-free cloth or brushing with a non-metallic bristle brush (tooth brush) wet with TT-I 735, Grade A or B isopropyl alcohol followed by rinsing with a stream of the alcohol from a plastic wash bottle and then drying with clean, dry, oil free compressed air (15 PSI max).

b. Remove fungus from male pins/contacts using the same methods as for the exterior surfaces of the electrical connector.

NOTE

Consult TO 1-1-689 for additional information on cleaning of electrical connectors.

c. Remove fungus from female pins/contacts by scrubbing with a pipe cleaner or a toothpick saturated with TT-I-735, Grade A or B isopropyl alcohol followed by rinsing with a stream of the alcohol from a plastic wash bottle and drying with clean, dry, oil free compressed air (15 PSI max).

3.5.7 Soil Barriers.

CAUTION

Do not apply soil barrier materials to any area other than engine exhaust and gun gas residue areas on aircraft having a camouflage or a flat paint scheme. These materials increase the specular gloss and IR reflectance of paint systems thereby compromising the effectiveness of the camouflage and flat paint schemes.

Soil barriers are transparent materials that are very effective in preventing damage to both painted and unpainted engine exhaust track areas and areas exposed to gun gas residue on aircraft and/or other equipment. Soil barrier materials shall be applied to these areas on aircraft immediately after curing of a new or overcoat paint system prior to engine run and existing paint systems after each aircraft wash as a part of the aircraft wash. Soil, soot, and/or gun gas residue gradually accumulate on or in the soil barrier film instead of the paint system protected by the film. when the protected area doesn't meet acceptable aircraft or equipment appearance standards, or an aircraft undergoes a routine wash, remove the soil barrier film per Paragraph 3.5.7.3 and reapply per Paragraph 3.5.7.2 using materials specified in Paragraph 3.5.7.1.

3.5.7.1 Materials. McGean-Rocho, Inc. PN Cee-Bee A-6 and Eldorado Chemical Co., Inc. PN PC-1020 are the soil barrier materials approved for use on Air Force aircraft and equipment.

NOTE

- Rain or water do not deteriorate soil barrier materials; but solvents, alkaline cleaners, and solvent emulsion cleaners tend to degrade and/or remove them.
- If the temperature of the surfaces to be treated with soil barriers reaches or exceeds 100° F (38° C), cool the surfaces with a light spray of fresh water before applying soil barrier materials.
- No prior cleaning and/or rinsing of an area is required if soil barriers are being applied on a new or overcoat paint system.

3.5.7.2 Application. If an old soil barrier film is present on the surface, remove it per Paragraph 3.5.7.3.

a. Thoroughly clean surface with MIL-PRF-87937, Type II or MIL-PRF-85570, Type II cleaning compound per Table 3-2 and Paragraph 3.5.2.1.

b. Rinse surface thoroughly with fresh water to remove all grease, oil, dirt, and cleaning compound residue and allow the water to drain off.

c. When most of the rinse water has drained off, apply a uniform film of either soil barrier material listed in Paragraph 3.5.7.1 with a non-atomizing type sprayer (garden sprayer), brush, or roller, and allow the film to dry for one hour before releasing the aircraft or equipment.

d. Flush the sprayer and/or rinse the brush or roller with fresh water immediately after completing the application operation. If soil barrier materials dry on/in application equipment, remove it with A-A-59601, Type II or III, or MIL-PRF-680, Type II or III degreasing solvent or soak the equipment in a solution of one part MIL-PRF-87937, Type II or MIL-PRF-85570, Type II cleaning compound and four parts water for a minimum of four hours.

3.5.7.3 Removal.

a. Apply McGean-Roncho, Inc. PN Cee-Bee A-276 or Eldorado Chemical Co., Inc. PN Astromat A soil barrier remover or A-A-59601, Type II or III, or MIL-PRF-680, Type II or III degreasing solvent to the surface from which the soil barrier film is to be removed with a non-atomizing sprayer, mop, brush, or cloth.

NOTE

- Soil barrier removers may be used as received or diluted 1 to 1 with water, but undiluted works best.
- Soil barrier removers are to be used only for removal of soil barrier films. They shall not be used for any other type of aircraft or equipment cleaning

b. Allow the soil barrier remover or solvent to dwell on the surface until it penetrates the soil barrier film (usually about 20 to 60 minutes).

c. Scrub the area thoroughly with a brush or 3M Co. PN 251 aircraft washing kit fitted with a non-abrasive cleaning pad or sponge, and then flush the area with fresh water.

d. Reapply soil barrier material per Paragraph 3.5.7.2.

SECTION III LUBRICATION

3.6 INTRODUCTION.

Lubrication performs a dual purpose: to prevent wear between moving parts; and also to fill air spaces, displace water, and provide a barrier against corrosive elements. The lubrication requirements contained in system peculiar maintenance manuals and/or cards are usually adequate to prevent corrosion of most lubricated surfaces under normal operating conditions. Aircraft lubrication shall be accomplished only by personnel qualified in lubrication procedures. In the event that the specified lubricant is not available, request substitutions from the aircraft SPD and/or the missile or equipment SPM.

NOTE

Comply with relubrication time frame requirements outlined in the system peculiar maintenance manual.

3.6.1 Conventional Lubricants. Table 3-4 contains the title, specification, intended use, and temperature range of the most frequently used conventional lubricating materials.

3.6.2 Solid Film Lubricants.

CAUTION

- Not all lubricating materials are compatible with each other and/or metals used in Air Force aircraft, missiles, or equipment. Some are known to promote galvanic corrosion or cause paint or acrylic plastics to deteriorate. Using the correct lubricating material is critical. Do not use greases or oils with solid film lubricants. Use only lubricants specified by appropriate system peculiar manuals and/or cards.
- Do not lubricate Teflon bearings or bushings. Clean Teflon bearings and bushings with A-A-59601, Type II or III, or MIL-PRF-680, Type II or III degreasing solvent.
- Lubricants containing graphite, either alone or in mixture with any other lubricants, shall not be used since graphite is cathodic to most metals and will cause galvanic corrosion in the presence of electrolytes.

Solid film lubricants are used where conventional lubricants are difficult to apply or retain, or where other lubricants may be contaminated with dust, wear products, or moisture and to reduce fretting corrosion on close tolerance fittings that see primarily static loads with only very small relative movement caused by vibration. Typical applications of solid film lubricants are sliding motion components such as flap tracks, hinges, turnbuckles and cargo latches.

CAUTION

- Do not use solid film lubricants in areas subject to rotational speeds above 100 RPM under heavy loads or on roller bearing elements because they will not provide adequate lubrication in these situations.
- Do not use solid film lubricants in conjunction with oils or greases as they are not compatible.

3.6.2.1 As with paints, surface preparation prior to application is extremely important to the service wear life of solid film lubricants. In reality, solid film lubricants are nothing more than paints with solid (powder) type lubricants used as the pigment. They are usually applied over surfaces precoated with other films, such as anodize (aluminum and magnesium base material), phosphate (steel base material), and sometimes over organic coatings such as epoxy primers.

3.6.2.2 SAE AS5272 (MIL-L-46010), Lubricant, Solid Film, Heat Cured, Corrosion Inhibiting is a heat cured, corrosion-inhibiting, solid film lubricant that provides extended wear life. It can be used on aluminum, copper, steel, stainless steel, and titanium in areas of infrequent operation and in areas requiring long term protection under static conditions to prevent galling, corrosion, and metal seizure. Because SAE AS5272 (MIL-L-46010), Type I must be cured at 400° F (205° C) for one hour and Type II must be cured at 300° F (149° C) for two hours, they are not suitable for all applications as metallurgical damage may occur at these temperatures.

3.6.2.3 MIL-PRF-46147 and/or MIL-L-23398, Lubricant, Solid Film, Air Cured, Corrosion Inhibiting are air-cured, corrosion-inhibiting, solid film lubricants that can be used on aluminum, steel and titanium in areas of infrequent operation and areas requiring long term protection under static conditions to prevent galling, corrosion, and metal seizure. They provide moderate wear life and corrosion protection in these areas when it is not feasible to use a solid film lubricant that requires curing at elevated temperatures, and can be used to repair damaged SAE AS5272 (MIL-L-46010) heat-cured, solid film lubricants. MIL-L-23398, Type I (bulk) and Type II (aerosol) both require a 6 hour cure at a temperature of 77° ±3° F(25° ±2° C). MIL-PRF-46147, Form 1 (bulk) and Form 2 (aerosol); Type I (standard solvents) require a 18 hour cure and Type II (low VOC content), both forms, require a 24 hour cure at these same temperatures. Curing of both MIL-L-23398 and MIL-PRF-46147 solid film lubricants may be accelerated by allowing air drying at room temperature for 30 minutes to flash off solvents and then heating to 125° ±5° F (52° ±3° C) for 1 to 1½ hours.

3.6.3 Application of Conventional Lubricants.

CAUTION

When lubricating hinges and pinned joints, apply a generous quantity of either MIL-L-63460 (preferably); MIL-C-81309, Type II; or MIL-PRF-32033 water displacing, Corrosion Preventive Compound (CPC) before applying the specified lubricant. Actuate hinges several times to make sure that the CPC's and lubricants penetrate all crevices thoroughly, and then wipe off excess from exterior surfaces.

3.6.3.1 Apply lubricants as sparingly as possible to prevent accumulation of dust, dirt, and other foreign matter, but always apply enough to provide adequate lubrication. Wipe away any excess lubricant. Using the proper method of application as specified in the appropriate system peculiar maintenance manual is important. Apply lubricants by one of the following methods:

- Grease guns: lever or pressure type
- Oil, squirt, and aerosol spray cans
- Hand or brush

3.6.3.2 Grease Gun Application. When applying grease type lubricants in pressure type grease fittings (Zerk fittings) with a grease gun, clean grease fitting with A-A-59601, Type II or III, or MIL-PRF-680, Type II or III degreasing solvent and clean cloth before applying lubricant. Make sure the lubricant has emerged around the bushing. If no grease appears, check the fitting and grease gun for proper operation. Be certain the grease gun is properly attached to the fitting prior to applying pressure. When applying grease to a flush type (high pressure) fitting, make sure that the grease gun is fitted with a flush type adapter and held perpendicular to the surface of the fitting before applying pressure. If the fitting does not accept lubrication, replace the fitting and lubricate. Wipe excess grease from the fitting and the surrounding surfaces with a clean, dry cloth.

Table 3-4. Common Military Greases the Their Uses

Specification and Nomenclature	Intended Use	Recommend Temperature Range
AMS-G-4343 Grease, Pneumatic System (NATO Code G-392)	Lubrication between rubber and metal parts of pneumatic systems; pressurized cabin bulkhead grommets and other mechanisms requiring rubber to metal lubrication.	-65° to 200° F (-54° to 93° C)
AMS-G-6032 Grease, Plug, Valve, Gasoline and Oil Resistant (NATO Code G-363)	Tapered plug valves; gasket lubricant or seal; general plug valve and fitting use where gasoline, oil, alcohol, or water resistance is required.	-32° to 200° F (0° to 93° C)
MIL-G-21164 Grease, Molybdenum Disulfide, for Low and High Temperatures (NATO Code G-353)	Heavily loaded steel sliding surfaces, accessory splines, or anti-friction bearings carrying high loads and operating through wide temperature ranges where molybdenum disulfide will prevent or delay seizure in the event of inadequate lubrication. This grease is not intended for use in wheel bearings.	-100° to 250° F (-73° to 121° C)
MIL-PRF-23827 Grease, Aircraft and Instrument, Gear and Actuator Screw (NATO Code G-354)	Lubrication of ball, roller, and needle bearings, gears, and sliding and rolling surfaces of equipment such as instruments, cameras, electronic gear and aircraft control systems that are subject to extreme marine and low temperature conditions; rolling and sliding surfaces of equipment with low motivating power (low torque equipment); general use on aircraft gears, actuator screws, and other equipment with high load carrying capacity. Its extremely low volatility makes it useful on aircraft optical equipment since it will not produce oil fogging	-100° to 250° F (-73° to 121° C)
MIL-G-25013 Grease, Aircraft, Ball and Roller Bearing (NATO Code G-372)	Lubrication of ball and roller anti-friction bearings that operate at extreme high or low temperatures, especially in applications where soap-type petroleum or synthetic oil greases and oils cannot be used. Can be used on aircraft actuators, gearboxes, and similar equipment.	-100° to 450° F (-73° to 232° C)
MIL-G-25537 Grease, Aircraft, Helicopter, Oscillating Bearing (NATO Code G-366)	Lubrication of aircraft bearings having oscillating motion of small amplitude.	-65° to 160° F (-54° to 71° C)
MIL-PRF-27617 Grease, Aircraft and Instrument, Fuel and Oxidizer Resistant	Lubrication of taper plug valves, gaskets, and bearings in aircraft and ground support equipment fuel systems; lubrication of valves, threads, and bearings of liquid oxygen (LOX) systems of aircraft, aerospace vehicles, and support equipment. Do not use on aluminum or magnesium dynamic bearings due to possible ignition hazard.	
Type I (NATO Code G-397)		-65° to +300° F (-54° to +149° C)
Type II (NATO Code G-398)		-40° to +400° F (-40° to +204° C)

Table 3-4. Common Military Greases the Their Uses - Continued

Specification and Nomenclature	Intended Use	Recommend Temperature Range
Type III (NATO Code G-399)		-30° to +400° F (-34° to +204° C)
Type IV (NATO Code G-1350)		-100° to +400° F (-73° to +204°C)
Type V		-100° to +450° F (-73° to +232° C)
MIL- PRF-81322 Grease, Aircraft, General Purpose, Wide Temperature Range (NATO Code G-395)	NLGI Grade 1: arresting gear sheave spacers and other equipment that operates under high contact loads and high sliding speeds NLGI Grade 2: aircraft wheel bearings and internal brake wheel assemblies, anti-friction bearings, gearboxes, and plain bearings. Both will withstand high speed operations and operations on equipment subject to extreme marine environments.	-65° to 350° F (-54° to 177° C)

SECTION IV PRESERVATION

3.7 INTRODUCTION.

Corrosion preventive compounds (CPC's), or preservatives, are used to protect metal aircraft, missile, and equipment parts and components by preventing corrosive materials from contacting and corroding bare metal surfaces. Many of these compounds are also able to displace water, including sea water, and other contaminants from these surfaces; and some provide lubrication, as well as corrosion protection. Generally, CPC's are mixtures of special additives in petroleum derivative bases (special oils or greases). CPC's range in appearance and consistency from the thick, black types, such as MIL-C-16173, Grade 1, to light oils, such as MIL-PRF-32033. The thicker CPC's provide the best corrosion protection, are longer lasting, and are more difficult to remove. The thinner materials provide some lubrication and do not crack, chip, or peel; but they must be removed and replaced regularly to provide continuing protection.

3.7.1 Operational Preservation. The day to day application of CPC's to prevent corrosion on operational aircraft is known as operational preservation. Areas which are corrosion prone or where paint has been damaged should be routinely protected by CPC's until more permanent treatment, such as paint touch-up or sealant, can be applied.

3.7.2 Non-Operational Preservation. Preservation of aircraft or components during periods of prolonged inactivity, storage, or shipment is known as non-operational preservation.

3.7.3 Types of CPC's. CPC's can be separated into two major categories: water displacing and non-water displacing compounds.

3.7.3.1 Water Displacing Compounds. Water displacing CPC's can be used to remove water, in-cluding sea water, or other electrolytes from metal surfaces. MIL-C-81309, MIL-L-63460, MIL-PRF-16173, Grade 3, and MIL-PRF-32033 are water displacing CPC's that are able to penetrate into cracks, crevices, voids at faying surface edges, around fastener heads, and into hinges. They usually provide very thin coatings, one mil (0.001 inch) or less in thickness, that are clear or translucent and remain soft and oily after application, so they cannot provide long term protection outdoors or in areas which are frequently handled. Another type, MIL-C-85054, differs from the other water displacing compounds as it doesn't penetrate into joints very well, but forms a relatively hard, dry film on exterior surfaces, and therefore, it can be used for protection outdoors and in areas of frequent handling.

3.7.3.2 Non-Water Displacing Compounds. Non-water displacing CPC's may be used on dried surfaces or on surfaces which have been first treated with a water displacing CPC. MIL-PRF-16173, Grades 1, 2 and 4 are non-water displacing CPC's. They are heavier bodied, waxy type greases which provide long term corrosion protection by forming a barrier film on metal surfaces. These CPC's provide thicker coatings and are light brown to very dark brown in color, with a waxy greasy appearance. They provide good corrosion protection in areas where large amounts of water collect on or run off of structures.

3.7.4 Time Limitations of CPC's. . Because of their temporary nature, CPC's must be regularly removed and replaced to provide continuing corrosion protection. Table 3-5 provides the recommended time intervals for indoor and outdoor CPC use.

Table 3-5. Time Limitations for CPC's

CPC	Outdoor[1]	Indoor[2]	[3]Indoor Covered
Soft Thin Films			
MIL-C-81309, Type II	14 Days	30 Days	180 Days
MIL-C-81309, Type III	5 Days	14 Days	90 Days
MIL-L-87177, Grade B	5 Days	14 Days	90 Days
MIL-PRF-16173, Grade 3	14 Days	30 Days	180 Days
Lubrication and Protection			
MIL-PRF-32033	5 Days	30 Days	180 Days
MIL-L-63460	5 Days	30 Days	180 Days
Hard Thick Films			
MIL-C-85054	90 Days	210 Days	365 Days
MIL-PRF-16173 Grade 4	90 Days	210 Days	365 Days
MIL-PRF-16173 Grade 2	90 Days	210 Days	365 Days
MIL-PRF-16173 Grade 1	210 Days	365 Days	365 Days

1 Outdoor: Without cover; exposed to elements in a mild climate; absence of Outdoor: Without cover; exposed to elements in a mild climate; absence of Outdoor: Without cover; exposed to elements in a mild climate; absence of rain and other washing forces; free from air and water borne pollutants.

2 Indoor: Hangars, shop areas, storage or parts accumulation areas, warehouses

3 Indoor covered: Items are wrapped or sealed in a water-resistant material and stored indoors in a hangar, warehouse, or shop area. Soft thin film CPCs were designed for indoor use and ease of removal.

Table 3-6. Corrosion Preventive Compounds

Specification and Nomenclature	Intended Use	Type of Coating
WATER-DISPLACING CPC's		
MIL-PRF-32033 Lubricating Oil, General Purpose, Preservative, (Water Displacing, Low Temperature); Military Symbol PL-S; NATO Code O-190	Lubrication and corrosion protection of hinges, other moving parts, small arms and automatic weapons, and wherever a low temperature, water displacing lubricant is required; requires frequent reapplications.	Soft, oily coating and lubricant
MIL-L-63460 Lubricant, Cleaner, and Preservative for Weapons and Weapons Systems; Military Symbol CLP; NATO Code S-758	Lubrication and short term preservation of hinges, and small and large caliber weapons in all climatic conditions within a temperature range of -65° to +150° F (-54° to +66° C); facilitates the effective removal of firing residues, gums, and other contaminants from weapons components while providing adequate lubrication and short term preservation. Of all water displacing CPC's, this material is the best lubricant. Excellent water displacing characteristics and penetration into tight joints.	Thin corrosion preventive lubricant film

Table 3-6. Corrosion Preventive Compounds - Continued

Specification and Nomenclature	Intended Use	Type of Coating
MIL-PRF-16173 Corrosion Preventive Compound, Solvent Cutback, Cold Application, Grade 3	Displacement of water; short term corrosion protection of metal surfaces during shipment, storage, and in-service use; can be used on moving parts where minor lubrication is required, such as on hinges, bomb racks, and sliding parts.	Soft, oily, thin film (1.0 mil), light amber color
MIL-C-81309 Corrosion Preventive Compounds, Water Displacing, Ultra-thin Film		
Type II	Displacement of water; short term corrosion protection of metal surfaces during shipment, storage, and in-service use; corrosion protection of moving parts where very minor lubrication is required, such as hinge areas, bomb racks, and sliding parts. Cannot be used on interior of electrical or electronic equipment and connectors.	Soft, oily, very thin film (0.5 mil) translucent, light amber color
Type III	Displacement of water; corrosion protection of electrical, avionics, and other electronic equipment, electrical connector plugs and contact pins. This material and MIL-L-87177, Grade B are the only CPC's that can be used on the interior of electrical or electronic equipment and connectors	Soft, oily, ultra thin film (0.2 mil), translucent, light amber color.
MIL-L-87177 Lubricants, Corrosion Preventive, Water Displacing, Synthetic Grade B	Displacement of water, corrosion protection, and some lubrication on in-service lightly loaded moving parts. Can be used on interior of electrical, avionics and other electronics equipment and connectors	Soft, oily, thin film (0.5 mil), translucent, light amber color
MIL-C-85054 Corrosion Preventive Compound, Water Displacing, Clear (AMLGUARD)	Corrosion protection and water displacement for non-moving parts, such as skin seams, installed fastener heads where paint has cracked, access panel edges, and areas with damaged paint. Cannot be used on interior areas of electrical or electronics equipment and connectors or in joint areas of moving parts as it dries to a hard film.	Dry, thin film (1.0 mil), transparent, colorless to slight blue tint
	NON-WATER DISPLACING CPC's	
MIL-PRF-16173 Corrosion Preventive Compound, Solvent Cutback, Cold Application		

Table 3-6. Corrosion Preventive Compounds - Continued

Specification and Nomenclature	Intended Use	Type of Coating
Grade 1	Protection of metal surfaces against corrosion when exposed with or without covering indoors or outdoors. Cannot be used if temperatures will fall below 0° F (-18° C) as the film will crack and can spall from the surface leaving it unprotected.	Hard, tack-free, thick film (4.0 mils), dark brown or black color
Grade 2	Protection of metal surfaces against corrosion during rework or storage; film remains tacky.	Soft, non-drying, thick (2.0 mils), light brown color
Grade 4	Protection of metal surfaces against corrosion during indoor storage when a transparent coating is required; coating of aircraft and equipment interior, metal wire control cables.	Soft, tack-free, thick (2.0 mils), light brown color

3.7.5 Description of CPC's. A list of CPC's and their intended uses is summarized in Table 3-6.

3.7.5.1 MIL-C-81309, Corrosion Preventive Compound, Water Displacing, Ultra Thin Film and MIL-L-87177, Lubricants, Corrosion Preventive, Water Displacing, Synthetic.

WARNING

MIL-C-85054, MIL-L-63460, and MIL-C-81309 have been revised to eliminate ODC's . Some reformulated products now contain flammable solvents and/or propel-lants. Pay close attention to all CAUTION/WARNING labels on the product containers.

MIL-C-81309 and MIL-L-87177 materials are general purpose corrosion preventive compounds for use when a thin, water displacing CPC is needed. MIL-C-81309 and MIL-L-87177 are for indoor protection and short term protection where surfaces can be recoated when required. These materials are excellent water displacing compounds which provide an ultra thin, soft film (0.5 mil or less). The MIL-C-81309 specification covers two types of materials and the MIL-L-87177 specification covers one grade of material that are useful for Air Force purposes to provide temporary protection from corrosion while still being easily removable with a solvent. They should not be used around LOX fittings. All of these CPC's may be applied by either dipping, brushing, or spraying with a pump or aerosol sprayer.

3.7.5.1.1 MIL-C-81309, Type II and MIL-L-87177, Grade B. These CPC's form a soft, thin film for general use on moving or sliding parts where some lubrication is needed, such as on hinges or bomb rack components. These materials can be easily washed away by rain or wash procedures, so frequent reapplication may be required. They are useful in the protection of areas which cannot be properly drained or contain recesses that are particularly difficult to reach due to their excellent water displacing abilities.

3.7.5.1.2 MIL-C-81309, Type III and MIL-L-87177, Grade B. These CPC's form an ultra thin, soft film that provides excellent water displacement and corrosion protection for the interior of electrical, avionics and other electronic equipment and connectors. Although these CPC coatings are non-conductive, they will allow electrical contact because their very soft, thin film is easily moved aside by mechanical action or contact. These materials are the only CPC's allowed for interior use on electrical and electronics equipment.

3.7.5.2 MIL-C-85054, Corrosion Preventive Compound, Clear (AMLGUARD). AMLGUARD is a water displacing CPC which forms a clear, hard/dry, semi-flexible film. It is intended for use as a protective coating on bare metal areas where the paint system has been damaged or failed until touch-up and/or repainting is practical. Because of its paint-like characteristics, it provides no lubrication and blocks electrical conductivity.

CAUTION

Ensure that all areas where MIL-C-85054 is applied are fully dried before sealing an area. Although MIL-C-85054 is a corrosion preventive compound, its solvent vapors may cause corrosion if not allowed to dissipate.

3.7.5.2.1 AMLGUARD can be applied by either dipping, brushing, or spraying with a paint spray gun or an aerosol can, but it is primarily applied by spraying from aerosol cans. Invert the aerosol can after each use and spray to clear the spray tip (nozzle) of entrapped material. If an aerosol can does not spray, invert and depress the spray tip several times to clear the delivery tube and spray tip (nozzle). If the can still does not spray, remove and clean the plastic spray tip (nozzle), and then reinstall the spray tip (nozzle), and spray again to clear the delivery tube. Dip application provides only a very thin coating and therefore much less corrosion protection.

3.7.5.2.2 Remove AMLGUARD if it is damaged due to abrasion, there are cracks in the coating, or if there is evidence of corrosion under the coating. Since excessive AMLGUARD buildup is difficult to remove, especially after prolonged exposure to direct sunlight, remove previously applied coatings before reapplication. If the solvents recommended in Table 3-7 do not remove old films of AMLGUARD, spraying on fresh AMLGUARD to soften the film and wiping or rubbing while wet is often effective.

3.7.5.3 MIL-PRF-16173, Corrosion Preventive Compound, Solvent Cutback, Cold Application. MIL-PRF-16173 covers five different grades of CPC's which can be applied by brushing or dipping. Grades 1, 2, and 4 do not displace water and must be applied to dried surfaces or to surfaces which have been treated with MIL-C-81309, Type II or III, MIL-L-87117, Grade B, or MIL-PRF-16173, Grade 3.

3.7.5.3.1 Grade 1. A thick, hard, black CPC which can be removed with difficulty using mineral spirits or degreasing solvents. It offers the most corrosion protection of all the CPC's indoors and outdoors, and may be used at temperatures down to 0° F(-18° C). If used at temperatures below 0° F (-18° C), the CPC film can crack and spall off leaving the surface unprotected.

Table 3-7. Preservation of Specific Areas and Components

Area or Component	CPC	Application Instructions	Removal Instructions
NOTE Prior to the application of preservatives (CPC's), ensure removal of old preservative CPC coatings.			
EXTERIOR SURFACES NOT REQUIRING LUBRICATION			
Unpainted areas and areas with damaged paint which do not require lubrication (fastener heads; faying surface, access panel, door, and frame edges; attachment points; non-moving attachment hardware; wheel well areas; ram air ducts ; and flap/slat cavities)	MIL-C-85054 or	Wipe off dirt and excess moisture. Apply thin coating of AMLGUARD. Allow to dry ½ hour. Apply a second coat.	Use a non-synthetic wiping cloth wet with A-A-59601, Type II or III, or MIL-PRF-680, Type II or III degreasing solvent. For stubborn AMLGUARD, refer to Paragraph 3.7.5.2.2.
	MIL-C-81309, Type II or MIL-L-87177 Grade B and MIL-PRF-16173, Grade 4	Wipe off dirt and excess moisture. Apply a coating of MIL-C-81309, Type II or MIL-L-87177, Grade B followed by a coating of MIL-PRF-16173, Grade 4.	
EXTERIOR SURFACES NOT REQUIRING HIGH PERFORMANCE LUBRICANT OR HYDRAULIC FLUID			

Table 3-7. Preservation of Specific Areas and Components - Continued

Area or Component	CPC	Application Instructions	Removal Instructions
Sliding or moving parts requiring only minor lubrication (bomb rack components, hinges, door locks)	MIL-L-63460 or MIL-C-81309, Type II or MIL-L-87177, Grade B and MIL-PRF-32033	Apply a continuous wet coat of MIL-L-63460. Apply a coating of MIL-C-81309, Type II or MIL-L-87177, Grade B followed by a coating of MIL-PRF-32033. If handled, reapply as necessary.	Use a non-synthetic wiping cloth wet with A-A-59601, Type II or III, or MIL-PRF-680, Type II or III degreasing solvent.
THREADED SURFACES Screws, various fasteners	MIL-L-63460 or MIL-C-81309, Type II or MIL-L-87177, Grade B or MIL-C-16173, Grade 4	Dip screws or fasteners in CPC and install. When disassembly is frequent, use MIL-L-63460, preferably, or use MIL-C-81309, Type II or MIL-L-87177, Grade B as alternates. When disassembly is infrequent, use MIL-C-16173, Grade 4 for long term protection.	Immerse screws or fasteners in A-A-59601, Type II or III, or MIL-PRF-680, Type II or III degreasing solvent and blot or blow dry.
HYDRAULIC PISTON SURFACES	System hydraulic fluid	Wipe exposed surface with a cloth dampened with the hydraulic fluid used in the system. Always wipe away from seals. Take care not to scratch surfaces.	Do not remove. Reapply as necessary.
ELECTRICAL CONNECTOR SHELLS (EXTERIOR SURFACES)		**NOTE** For additional information refer to TO 1-1-689.	
Connector shells located in control surface wells, wheel wells, bilge areas, and other interior areas of aircraft and missiles, and all areas of other equipment	MIL-C-85054 or	Wipe off dirt and excess moisture. Apply thin coating of MIL-C-85054 (AMLGUARD). Do not allow CPC to contact internal surfaces. Allow to dry ½ hour, and then apply a second coat.	Use a non-synthetic wiping cloth wet with A-A-59601, Type II or III, or MIL-PRF-680, Type II or III degreasing solvent. For stubborn AMLGUARD, refer to Paragraph 3.7.5.2.2.
	MIL-C-8130,9 Type II or III or MIL-L-87177, Grade B And MIL-PRF-16173, Grade 4	Wipe off dirt and excess moisture. Apply coating of MIL-C-81309, Type II or III, or MIL-L-87177, Grade B followed by a coating of MIL-PRF-16173, Grade 4.	
ELECTRICAL CONNECTOR SHELLS (INTERIOR SURFACES)		**NOTE** For additional information refer to TO 1-1-689.	

Table 3-7. Preservation of Specific Areas and Components - Continued

Area or Component	CPC	Application Instructions	Removal Instructions
		CAUTION Do not use any other type of CPC than those listed here on the interior of electrical connector shells as all other types will interfere with electrical conductivity.	
Connector shells located in all the same areas noted for exterior surfaces of connectors	MIL-C-81309, Type III or MIL-L-87177, Grade B	Wipe off dirt and excess moisture. Apply a thin, uniform coating of CPC.	Use a non-synthetic wiping cloth wet with TT-I-735 isopropyl alcohol.
ELECTRICAL CONNECTOR PINS (ALL)		**CAUTION** Do not use any other type of CPC than those listed here on electrical connector pins and sockets as they will interfere with electrical conductivity.	
Connector pins and sockets	MIL-C-81309, Type III or MIL-L-87177, Grade B	Apply a continuous thin, wet coat of CPC. If handled or exposed to water, reapply.	Use an acid brush with non-synthetic bristles to apply TT-I-735 isopropyl alcohol to pins and sockets. Lightly dab all pins and sockets, and then blot dry.
ELECTRICAL AND ELECTRONIC EQUIPMENT	Refer to TO 1-1-689.		
CONTROL CABLES (ALL) (INTERIOR and EXTERIOR)	MIL-C-81309, Type II or MIL-L-87177, Grade B or MIL-PRF-16173, Grade 3 and MIL- PRF-16173, Grade 4	Apply a continuous film of MIL-C-81309, Type II; MIL-L-87177, Grade B; or MIL-PRF-16173, Grade 3 water displacing CPC by aerosol can or by wiping with cloth wet with the CPC. Follow with a coating of MIL-PRF-16173, Grade 4 applied with a non-synthetic cloth or a non-metallic bristle brush.	Use a non-synthetic wiping cloth wet with A-A-59601, Type II or III, or MIL-PRF-680, Type II or III degreasing solvent.

Table 3-7. Preservation of Specific Areas and Components - Continued

Area or Component	CPC	Application Instructions	Removal Instructions
HELICOPTER CARGO HOIST DRUM	MIL-C-81309, Type II or MIL-L-87177, Grade B or MIL-PRF-16173, Grade 3 or	Apply a continuous film of MIL-C-81309, Type II; MIL-L-87177, Grade B; or MIL-PRF-16173, Grade 3 water displacing CPC to the drum surfaces by aerosol can or by wiping with a non-synthetic cloth wet with the CPC. Wipe with a clean cloth to remove excess.	Use a non-synthetic wiping cloth wet with A-A-59601, Type II or III, or MIL-PRF-680, Type II or III degreasing solvent.
	MIL-C-85054	Spray a continuous film of MIL-C-85054 (AML-GUARD) on the drum surfaces by aerosol can. Allow to dry one-half hour, and then apply a second coat.	For stubborn AMLGUARD, refer to 3-7.5.2.2.
ARMAMENTS	Refer to the system peculiar equipment maintenance and/or instruction manual.		
EJECTION SEATS	Refer to the system peculiar ejection seat maintenance manuals and SPM instructions.		

3.7.5.3.2 Grade 2. A thick, soft, grease-like, brown CPC that remains tacky and can be removed with mineral spirits or degreasing solvents. It protects under relatively severe conditions and given adequate maintenance touch-up as necessary, can be used for most maximum protection requirements. It may be used at temperatures down to -40° F (-40° C). It is not a good choice for parts that are handled frequently since it remains tacky.

3.7.5.3.3 Grade 3. A thin, soft, oily film, water displacing CPC. This CPC doesn't penetrate into tight joints as well as MIL-C-81309, Type II or MIL-L-87177, Grade B, so one of them should be used as a substitute for this type of application.

NOTE

Remove the MIL-C-16173, Grade 3 film with A-A-59601, Type II or III, or MIL-PRF-680, Type II or III degreasing solvent prior to inspecting an area when the coating is dark and prevents visual inspection of the underlying surface for cracks and hydraulic leaks.

3.7.5.3.4 Grade 4. A thick, soft, waxy type CPC that drys to a tack free, semi-transparent film through which identification can be read. It provides good protection under relatively severe conditions when touched-up as necessary. It is excellent for use on in-service equipment over MIL-C-81309, Type II; MIL-L-87177, Grade B; or MIL-PRF-16173, Grade 3 water displacing CPC since it drys to a tack free film. It can be used at temperatures down to -40° F (-40° C).

3.7.5.4 MIL-L-63460, Lubricant, Cleaner, and Preservative for Weapons and Weapon Systems.

CAUTION

- If MIL-L-63460 is used in an area which will later be sealed or totally enclosed with no ventilation, allow at least 4 hours for the solvent to evaporate prior to sealing or closing off the area. Although MIL-L-63460 is a corrosion preventive compound, its solvent vapors may cause corrosion if not allowed to dissipate.
- Do not use MIL-L-63460 on rubber or other elastomeric parts. MIL-L-63460 contains solvents which attack rubber O rings and other elastomeric parts. Do not use as a direct substitute for VV-L-800.

MIL-L-63460 is a thin, water displacing, protective, penetrating lubricant used for cleaning, lubrication, and preservation of aircraft, missile, and equipment hinges and fitting joints that experience only minor and infrequent relative motion, and on parts and areas of small or large caliber weapons. This material has good lubricating properties between -65° and +150° F (-54° and +65° C), and it is the best lubricant of all water displacing CPC's. It may be applied by brushing, dipping, or spraying by aerosol can or a pump sprayer.

3.7.5.5 MIL-PRF-32033, Lubricating Oil, General Purpose, Preservative, Water Displacing.

CAUTION

MIL-PRF-32033 material suffers a loss of viscosity or starts to gel at very low temperatures, therefore, it shall not be used when temperatures can drop below -40° F (-40° C).

MIL-PRF-32033 is a general purpose, water displacing, lubricating oil with preservative properties intended for the lubrication and preservation of aircraft, missile, and equipment components. It may be applied by brushing, dipping, or spraying by aerosol can or a pump sprayer.

3.7.6 Preservation of Specific Areas.

CAUTION

- Do not use corrosion preventive compounds on the interior of fuel tanks or fuel cells, engines, or engine fuel systems as fouling of fuel systems may occur.
- Do not use corrosion preventive compounds on engine parts or accessories which exceed 800° F (427° C). Corrosive reactions may occur with CPC's at high temperatures.
- CPC's are not compatible with LOX and should not be used on oxygen equipment, lines, fittings or storage bottles. Fire may result.

NOTE

Use only corrosion preventive compounds (CPC's) authorized by and described in this manual and/or a system peculiar equipment manual.

Table 3-7 provides procedures for the preservation of specific areas and components where the use of a CPC on exposed metal surfaces is generally recommended for reducing corrosion. This list does not constitute authority to use CPC's on specific equipment. The use of some or all types of CPC's in certain areas or on equipment may be detrimental. Therefore, consult the appropriate system peculiar aircraft, missile, or equipment corrosion and/or maintenance manuals before applying a CPC in a new area to determine which, if any, compounds should be used in that area.

3.7.7 Preservation Application Methods.

WARNING

- CPC's and solvents can produce toxic vapors. Use only in well ventilated areas. Avoid contact with skin. Consult the local safety office and bioenvironmental engineer for personal protective equipment (PPE) requirements.
- Do not use synthetic wiping rags or cloths with these materials as they will dissolve the synthetic cloth/rag.
- Keep CPC's and solvents away from open flames, heat, or sparks as they are flammable.

CPC's can be applied by brushing, dipping, or spraying. The area of application, viscosity of the material, and conditions under which they need to be applied are factors that influence the decision of which application method should be used. Low viscosity materials are best applied by spraying, whereas high viscosity materials are more suited for brushing or dipping. Dipping can be used for all types of materials, but the thickness of the coating obtained with low viscosity materials may be too thin to provide adequate corrosion protection. Prior to application of preservatives, remove old preservative coatings, and then apply a fresh coating using one of the following methods:

3.7.7.1 Brushing. Brushing may be accomplished using an ordinary paint brush. This method is most appropriate for applying thick materials on small areas or in areas where it is necessary to prevent material from getting on surrounding areas or nearby equipment.

3.7.7.2 Dipping. Dipping may be accomplished using any suitable container for the CPC. It is most suitable for smaller, disassembled parts. It cannot be used for assemblies which contain any part or area adversely affected by the CPC.

3.7.7.3 Spraying.

CAUTION

For spray application, do not thin or dilute bulk preservative CPC unless absolutely necessary. Do not use synthetic wiping cloths. Mask off adjacent areas to prevent overspray.

Spraying may be accomplished using paint spraying equipment, various types of pump sprayers, or aerosol cans. This method is very effective for application to large areas where confined areas are not involved. The viscosity of the material will determine which type of spraying apparatus to use.

3.8 APPLICATION OF POLISH AND WAX.

Polishing and waxing of aircraft exterior surfaces is prohibited.

CHAPTER 4
INSPECTION AND CORROSION PRONE AREAS

SECTION I INSPECTION

4.1 PURPOSE.

Frequent corrosion inspections are essential for an effective overall corrosion control program. Early detection, identification, and treatment, minimizes the costs resulting from corrosion damage. Without regular systematic inspections, corrosion will seriously damage aircraft, missiles, and equipment. This chapter describes the basic visual and Non-Destructive (NDI) inspection procedures for detecting corrosion as well as some of the signs of corrosion damage.

4.1.1 Responsibility. Corrosion detection is everyone's responsibility. Since corrosion can occur almost anywhere on aircraft, missiles, and equipment, all maintenance personnel must be able to identify and report corrosion problems. Personnel performing any scheduled inspections shall be qualified in corrosion detection and shall have attended appropriate corrosion prevention and control courses established by AETC and the MAJCOM, and required by AFI 21-105.

4.1.2 Frequency of Inspections. The frequency and extent of inspections are established by the aircraft System Program Director (SPD) and/or the missile or equipment System Program Manager (SPM). However, during scheduled or unscheduled maintenance actions on aircraft, missiles, or equipment and their components, the area involved as well as those within 36 inches (18 inches on each side) of the repair or treatment area shall be visually inspected for corrosion. Additional inspections of areas particularly prone to corrode, such as magnesium gear boxes, wheel and control surface wells, bilge areas, etc. may be necessary. Corrosion prone areas are discussed in Paragraph 4.5.

4.1.3 General Inspections. A general inspection of aircraft, missiles, and equipment is performed as follows:

a. Clean area thoroughly per instructions in Paragraph 3.5.

CAUTION

Prior to removing any access covers or panels coated with TT-P-2760 flexible polyurethane primer either with or without a MIL-PRF-85285 polyurethane topcoat, score the coating system at the edges of the cover/panel with a sharp plastic tool to prevent fraying or peeling of the paint finish system when the panel is removed for the first time after the finish system is applied.

b. If corrosion is suspected, examine the area with a 10X magnifying glass and flashlight. Pay particular attention to edges of skin panels, rivet heads, and other corrosion prone areas. If blisters, bubbles, or other coating irregularities are present, attempt to dislodge the paint by scraping with a sharp plastic tool. If paint does not dislodge easily, the irregularity is probably a sag or run which is confined to the paint film itself and no further action is necessary. When corrosion is suspected but no irregularities are present, clean and dry the area per Paragraph 3.5; and apply a strip of 3M Co. PN 250 (preferred) or A-A-883, Type II, flat-back masking tape over the area leaving a two inch length free at one end. Hand rub the tape for several strokes in order to assure good adhesion. Grip the free end of the tape, and remove the tape with an abrupt lifting motion. Where paint is removed, inspect and determine the extent/degree of corrosion as described by Paragraph 4.4.

c. Remove corrosion, clean, and treat the surface per procedures in Chapter 5, and touch-up the paint per TO 1-1-8.

4.1.4 Detailed Inspections. A detailed inspection of aircraft, missiles, and equipment shall be performed if the corrosion damage found during a general inspection is suspected to be extensive or severe, and/or as specified in appropriate system peculiar aircraft, missile, or equipment maintenance manuals. Aircraft, missiles, and equipment shall be carefully inspected for corrosion using the NDI tools and procedures listed in Table 4-1. Refer to Paragraph 4.5 for information on common corrosion prone areas.

4.2 INSPECTION METHODS.

4.2.1 Visual inspection. Visual inspection is the most widely used method for the detection and evaluation of corrosion. It is very effective for detecting most types of corrosion if done carefully with a knowledge of where and for what to look. Read Chapter 2 (Corrosion Theory) before performing corrosion inspection, paying particular attention to Table 2-1 (Appearance of Corrosion Products). The following tools can be used to find and evaluate the extent of corrosion damage:

- Flashlight
- 10X Magnifying Glass
- Plastic Scraper
- Depth Gauge, pin micrometer type

- Borescope
- Optical Micrometer

4.2.1.1 Evidence of Corrosion. Aluminum corrosion products are either white, gray, or black and may appear as a paste when wet or as either a hard, adherent film or easily crumbled deposits when dry. Magnesium corrosion products are white and powdery, and form in large amounts with significant losses to the base metal. Steel corrosion products (rust) are red, brown, or black deposits either in the form of a powder or when severe, as flakes that spall off easily. Copper corrosion products (patina) are blue or blue-green deposits that adhere tightly to the surface. Titanium and stainless steels do not produce significant amounts of visible corrosion products on their surfaces, but they can exhibit cracking due to stress corrosion cracking. When corrosion occurs beneath a paint system, the surface of the paint appears blistered, bubbled, or distorted.

4.2.2 Depth Gauge. Depth gauges are tools used to measure the depth of corrosion pits and areas reworked for pitting, exfoliation, and other types of corrosion to determine the extent of corrosion damage and the amount of metal removed during rework. If the pit and/or rework area depth are within allowable tolerances specified in a system peculiar aircraft, missile, or equipment manual as directed by Paragraph 5.6, the pits can be acceptably reworked, and areas reworked for corrosion damage of any type are acceptable. Reapplication of a protective coating system to reworked areas per TO 1-1-8 and the applicable system peculiar aircraft, missile, or equipment manual is required. If the depth of pits or a reworked area are not within allowable tolerances, the part must be replaced or repaired, if allowed, or a request for engineering assistance must be submitted to the aircraft SPD and/or the missile or equipment SPM.

NOTE

On thin sheet material, waviness in the material may result in false depth readings. Several readings may be necessary, or it may be necessary to improvise another method for determining the depth of the corrosion damage. The depth gauge is not suitable for determining the depth of a stress corrosion or corrosion fatigue crack due to the relatively large size of the indicator pin.

4.2.2.1 Use of Depth Gauges. Take several depth readings in the affected area, and select the deepest reading as the corrosion damage depth. Where there are several damaged areas in the same skin panel or component part, plot or sketch a diagram of the depth and location of each damaged area for comparison with damage limits specified in the applicable system peculiar aircraft, missile, or equipment manuals or for forwarding to the aircraft SPD and/or the missile or equipment SPM engineer when requesting engineering assistance. Place the depth gauge base flat against the undamaged surface on each side of the corrosion damage area. When taking measurements on concave or convex surfaces, place the base perpendicular to the surface (refer to Figure 4-1). Also, on the interior or exterior of an aircraft fuselage or a missile body, it is best to align the length of the depth gauge base with the fuselage or body length.

Table 4-1. NDI Inspection Tools for Various Types of Corrosion

Equipment		Type of Corrosion Detected or Evaluated (See Type Below)
Borescope		1, 2, 3, 4, 5, 10, 11, 12
Depth Gauge		4, 5
Optical Micrometer		1, 2, 4, 5, 6, 7, 8, 10,11
Fluorescent Penetrant		3, 4, 8, 9
Eddy Current		1, 3, 4, 6, 8, 9
Ultrasonic		3, 4, 6, 8, 9,
Radiography		6, 8, 9,
Type	1 Uniform surface corrosion	
	2 Galvanic or dissimilar metal corrosion	
	3 Intergranular attack (general)	
	4 Intergranular attack (exfoliation)	
	5 Pitting	
	6 Crevice/concentration cell corrosion	
	7 Fretting corrosion	
	8 Stress corrosion cracking	
	9 Corrosion fatigue	
	10 Filiform corrosion	
	11 Microbiologically induced corrosion	

Table 4-1. NDI Inspection Tools for Various Types of Corrosion - Continued

Equipment	Type of Corrosion Detected or Evaluated (See Type Below)
12 High temperature oxidation	

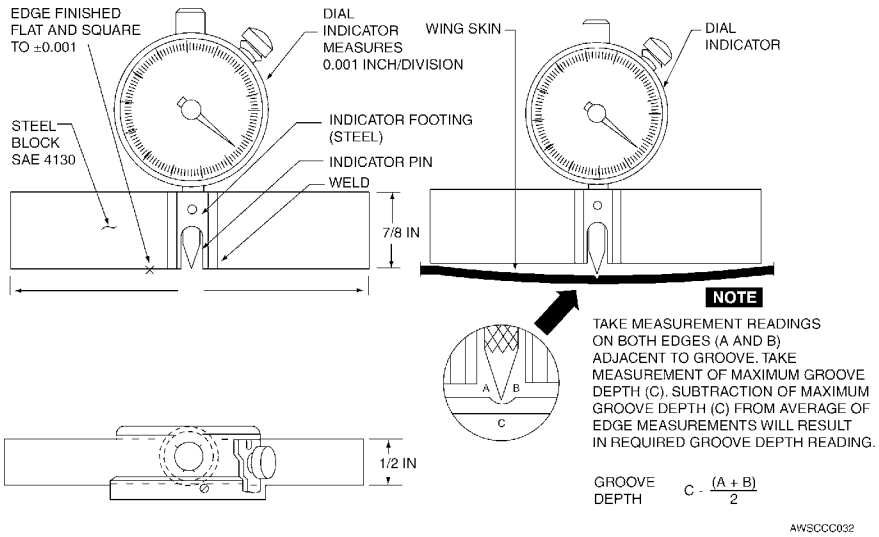

Figure 4-1. Depth Dimension of Corrosion Pits

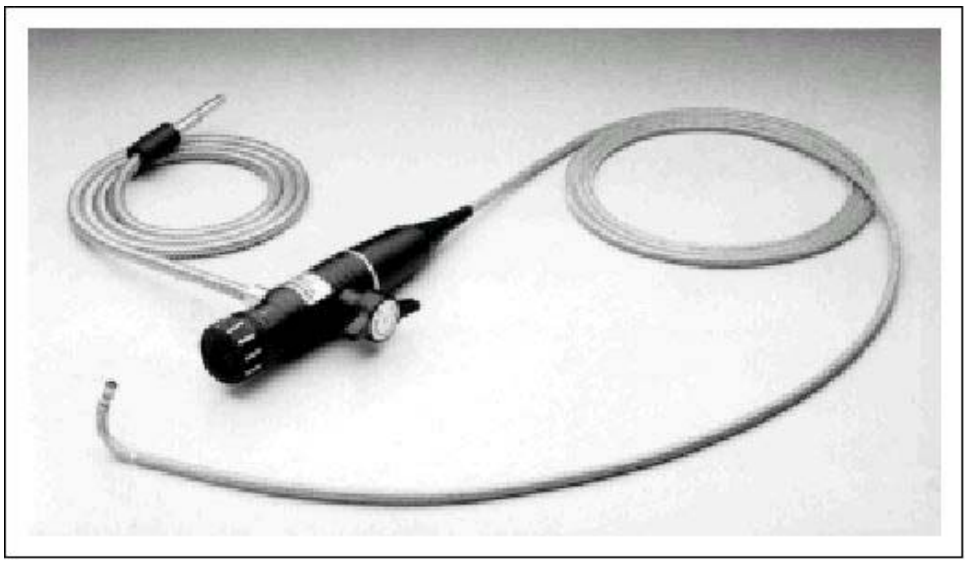

Figure 4-2. Fiber Optic Borescope

4.2.3 Visual Inspection with a Borescope. The borescope has a small, high intensity light that can be used to aid in the inspection of interior surfaces which are not accessible by any other method. Insert the head assembly into any cavity having a large enough opening. With the cavity illuminated, visually inspect it's interior for defects, such as damage to the paint system and corrosion (refer to Figure 4-2).

NOTE

Wearing eyeglasses makes it difficult to place the eye at the ideal distance from the eyepiece, and the view is distorted by external glare and reflection. Rubber eye shields on optical instruments (e.g. borescope, optical micrometer) are designed to shut out external light, but are not as effective when glasses are worn. For these reasons, it is desirable that the inspector be able to adjust the instrument without wearing glasses to compensate for variations in visual acuity.

4.2.4 Optical Depth Micrometers..

4.2.4.1 Analog Mechanical Read-Out Type. This inspection tool is an alternate for the digital read-out optical depth micrometer and is used to measure the depth of scratches, cracks, pits, and reworked areas and/or the height of spurs and other protrusions (refer to Figure 4-3). The optical depth micrometer is first focused on the highest surface in the area of interest and a reading is taken. A second reading is taken when the lowest surface is in focus. The difference between the readings is the distance between the two surfaces. Optical micrometers are available with 100 and 200 power magnification, reticle eyepieces, and accessory lighting. Use the procedures outlined below to determine the depth of corrosion pits and/or areas reworked due to corrosion damage on any surface with the optical depth micrometer:

a. Select the appropriate base surface (e.g., flat, curved, round, or inside/outside angle surfaces) in the area where the measurement is to be made that will provide a stable location for the micrometer feet.

b. Position the micrometer solidly over the base surface A of Figure 4-3 (undamaged surface close to surface B of Figure 4-3) to make an initial measurement. While the micrometer is set over the surface, a pin point of light will cover the area being measured.

c. Look through the eyepiece of the micrometer and rotate the micrometer thimble clockwise or counterclockwise starting with the hundred thousandth scale, then the ten thousandth scale, and finally the thousandth scale until

surface A of Figure 4-3 comes into sharp focus using extreme care when focusing to reduce inaccuracy in the measured values.

d. Obtain and record the reading for surface A of Figure 4-3 located on the vernier scale. Since the vernier scale is not one that can be simply read, an experienced technician with the proper training is required to read the scale accurately.

e. Position the micrometer over surface B of Figure 4-3 (corrosion pit or area reworked due to corrosion damage) to measure the pit or rework depression depth. When measuring the depth of corrosion pits or reworked areas, ensure that the surface being measured has a large enough area to focus on for an accurate reading.

f. Repeat procedures in steps c. and d. on surface B of Figure 4-3. Take several readings from the corrosion grind-out area and/or the corrosion pit, and use the deepest reading for the depth calculation.

g. Subtract the surface A of Figure 4-3 reading from the surface B of Figure 4-3 reading to obtain the depth of a corrosion grind-out or a corrosion pit or: Pit/Damage Depth = B Reading - A Reading.

4.2.4.2 Digital Read-Out Type. This digital read-out optical depth micrometer is the preferred inspection tool for measuring the depth of scratches, cracks, pits, and reworked areas and/or the height of spurs and other protrusions (refer to Figure 4-4). The optical depth micrometer is first focused on the highest surface in the area of interest (usually an undamaged surface next to a scratch, pit, or grind out area), and the digital display is set to zero (0). The micrometer is then focused on the lowest surface of the area being inspected (the bottom of the scratch, pit, or grind out area). The reading shown in the digital display when the lowest surface is brought into focus is the actual depth of the area or the difference between the undamaged surface and the bottom of the damaged area. This type of optical micrometer comes with extra lenses capable of 40, 80, 100, and 200 power magnification. The depth of narrow features such as stress corrosion and corrosion fatigue cracks can be observed and measured with the higher power lenses while using the reticle eyepiece to measure the width of such features. The digital micrometer kit also includes interchangeable bases, accessory lighting, and a sample scratch plate for demonstration and practice. Use the procedures outlined below to determine the depth of corrosion pits and/or areas reworked due to corrosion damage on any surface with the optical depth micrometer:

a. Select the appropriate base to use on the type of surface (e.g. flat, curved, round, or inside/outside angle) on which the measurement will be made.

b. Turn on the digital display, and check to see if it reads in inches and not millimeters. Change it to inches with the in/mm button if necessary.

NOTE

The “origin” button is not needed or use in this application.

c. Shine a flashlight down through the eyepiece to spot the target and position the micrometer. Look through the eyepiece, and focus up and down to assure that both the high and low surfaces are within the field of view. Rotating the focus thimble counterclockwise moves the lens up and clockwise moves the lens down. The 10X objective lens will focus when it is approximately ¼ in above the surface.

d. Focus on surface A, and carefully press the “zero” button on the display without moving the micrometer.

e. Focus on surface B, and read the depth on the digital display while observing the following points:

(1) Do not move the micrometer base when refocusing between surface A at the 0.000 inch digital read-out and surface B.

(2) To get accurate readings, take extreme care in focusing. Be sure to focus well past the surface B (clockwise rotation) you picked in case even lower areas might be found.

(3) If both surfaces A and B are not within the field of view, use the 4X lens to get a wider field of view.

f. Take several readings from the corrosion damaged/grind out area, and select the deepest reading as the actual depth.

4.2.5 Fluorescent Penetrant Inspection.

CAUTION

The apparent simplicity of the penetrant inspection is deceptive. Very slight variations in the inspection process can invalidate the inspection by failing to indicate serious flaws. It is essential that personnel performing penetrant inspection be trained and experienced in the penetrant process.

NOTE

The following inspection methods shall be accomplished only by qualified and certified NDI technicians. Refer to TO 33B-1-1 and the specific system peculiar NDI manual for more detailed inspection procedures.

Fluorescent penetrant inspections require components to be cleaned and then treated with a fluorescent penetrating liquid which is capable of entering surface cracks and/or flaws. After removing the penetrant from the surface, a developer

(powder or liquid suspension of powder) is applied to absorb penetrant trapped in the cracks or flaws. Under ultraviolet light, the absorbed penetrant is visible directly above the cracks or flaws from which it was drawn out. The penetrant inspection method is used to detect stress corrosion cracking, corrosion fatigue and plain fatigue cracks, intergranular corrosion, and residual corrosion following corrosion removal by grinding or sanding. Intergranular corrosion attack at metallic grain boundaries and the network of very fine cracks it forms are visible in the early stages only under a 10X or greater magnification, and developer is not used when evaluating a penetrant indication with a magnifying glass. In addition, if penetrant inspection is used to monitor a surface for adequacy of corrosion removal by grinding or sanding, caution must be exercised because mechanical removal methods can cause smearing which may obscure indications of remaining corrosion. When monitoring corrosion grind-out areas with penetrant, a developer is not used following removal of excess surface penetrant; because the area must also be examined with a 10X magnifying glass after a minimum five minute dwell time. When corrosion is no longer detected in a corrosion grind-out area, the inspection process shall be repeated using non-aqueous developer to determine if any cracks are present.

4.2.5.1 Limitations of Penetrant Inspection.

4.2.5.1.1 Flaw Location. Penetrant inspection is applicable to all solid, non-porous materials provided the flaw being inspected for is open to the surface of the part. To detect subsurface flaws, another inspection method must be used.

4.2.5.1.2 Restricted Flaw Openings. The penetrant inspection process depends upon the ability of the penetrant to enter and exit the flaw opening. Any factor that interferes with the entry or exit reduces its effectiveness. Organic coatings, such as paint, oil, grease, or resin, are examples of this interference. Any coating that covers or bridges the flaw opening prevents penetrant entry, and even if it does not cover the opening, material at the edge of the opening affects the mechanism of penetrant entry and exit, and greatly reduces the reliability of the inspection. Coatings at the edge of the flaw may also retain penetrant causing background fluorescence. An inspection method other than penetrant must be used if the organic coating cannot be stripped or removed from the surface in the area to be inspected.

4.2.5.1.3 Smeared Metal. Mechanical operations, such as shot peening, machine honing, abrasive blasting, buffing, wire brushing, grinding, or sanding, can smear or peen the surface of metals. This mechanical working closes or reduces the surface opening of any existing discontinuities or flaws. Mechanical working (smearing or peening) also occurs during service when parts contact or rub against each other. Penetrant inspection will not reliably indicate discontinuities or flaws when it is performed after a mechanical operation or service that smears or peens the surface. Chemical etching per procedures in TO 33B-1-1 and/or the system peculiar aircraft, missile, or equipment NDI manual is recommended prior to penetrant operations to improve test sensitivity when smeared metal is present.

4.2.5.1.4 Porous Surfaces. Penetrant inspection is impractical on porous materials with interconnected subsurface porosity. The penetrant rapidly enters the pores and migrates through the network. This results in an overall fluorescence or color that masks any potential discontinuity or flaw indications. In addition, removal of the penetrant after the inspection may be impossible.

4.2.6 Eddy Current Inspection. The eddy current inspection method may be used to detect or evaluate accessible and inaccessible surfaces for corrosion. This method can detect and evaluate pitting, intergranular, exfoliation, stress corrosion cracking, and corrosion fatigue cracking. Detection of corrosion with eddy current techniques is used on aircraft, missile, and equipment skins where corrosion may occur on inaccessible interior surfaces. Corrosion usually occurs in areas where moisture is entrapped in faying surface areas. If relatively uniform thinning is expected, corrosion detection may be simply a matter of thickness measurement. In most instances, corrosion is confined to smaller localized areas of relatively small diameter. As skin thicknesses increase, sensitivity to small areas and shallow depths of corrosion is reduced. Corrosion on either member of faying surfaces may be detected. Refer to TO 33B-1-1 and/or the system peculiar NDI manuals for more detailed inspection procedures. Eddy current can also be used for corrosion removal inspections, but is less sensitive than penetrant.

4.2.7 Ultrasonic Inspection. The ultrasonic inspection method may be used to detect exfoliation, intergranular, pitting corrosion; and stress corrosion and corrosion fatigue cracking. Ultrasonic thickness gauging is included in this method. Ultrasonic inspection for far-side pitting and internal exfoliation corrosion may be accomplished using shear (“S”) wave and longitudinal (“L”) wave techniques. The use of a delay line transducer is recommended for “L” wave inspection to improve resolution of both near and far surface corrosion. Technique development is required for each specific application. Refer to TO 33B-1-1 and/or system peculiar NDI manuals for more detailed inspection procedures.

4.2.8 Radiographic Inspection. Although the radiographic inspection method is available for detection and evaluation of corrosion, it is generally used only when no other method can accomplish the inspection. The labor hour requirements are high for on-aircraft/missile/equipment radiography as well as requiring restricted access for other maintenance personnel during the inspection. Radiographic inspection is used in combination with ultrasonics to determine the condition of aluminum honeycomb. Refer to TO 33B-1-1 and/or system peculiar NDI manuals for more detailed inspection procedures.

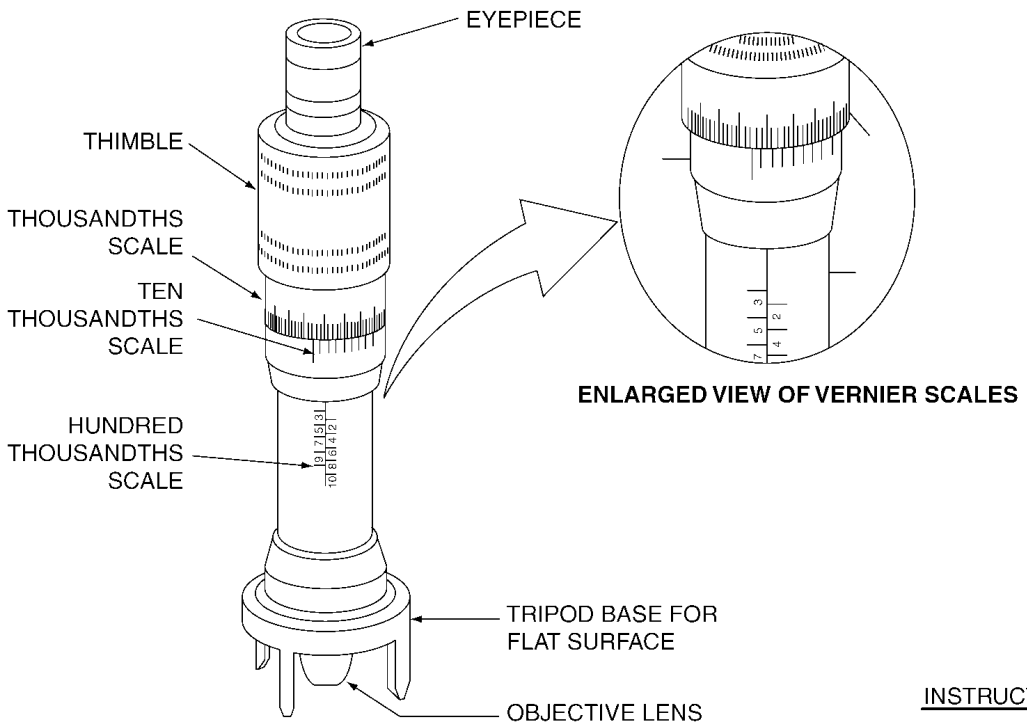

OPTICAL DEPTH MICROMETER

PARTAL VIEW OF OPTICAL DEPTH MICROMETER SHOWING ONLY THE OPTIC AND BASE

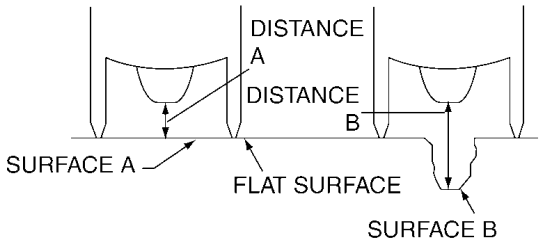

INSTRUCTIONS

- PLACE MICROMETER ON AN UNDAMAGED SURFACE NEAR THE AREA OF INTEREST.

NOTE

FOR BEST RESULTS, THE MICROMETER TRIPOD SHOULD BE STABLE AND REMAIN STATIONARY WHEN MEASURING DISTANCE.

- FOCUS ON UNDAMAGED SURFACE BY ADJUSTING THE THIMBLE ON THE MICROMETER.
- TAKE READING FROM VERNIER SCALES. THIS READING IS DISTANCE A.
- MOVE MICROMETER AND CENTER OVER CORROSION PIT.
- FOCUS ON BOTTOM OF PIT BY ADJUSTING THE THIMBLE ON THE MICROMETER.
- TAKE READING FROM VERNIER SCALE. THIS READING IS DISTANCE B.
- PIT DEPTH = DISTANCE B - DISTANCE A

AWSCCC034

Figure 4-3. Optical Depth Micrometer (Analog Mechanical Read Out Type)

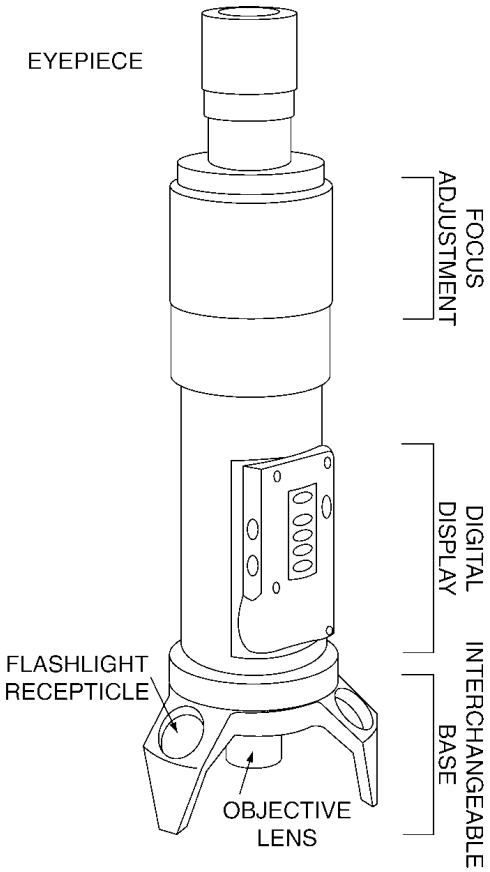

DIGITAL OPTICAL DEPTH MICROMETER

DIGITAL DISPLAY DETAIL

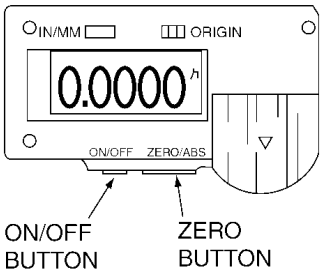

INSTRUCTIONS

1. TURN DIGITAL ON AND SET TO READ IN INCHES WITH "IN/MM" BUTTON.
2. PLACE MICROMETER OVER TARGET AND SHINE FLASHLIGHT DOWN THROUGH LENS TO LOCATE AREA PRECISELY. 10X OBJECTIVE LENS WILL FOCUS AT APROX. 1/4 IN ABOVE SURFACE. USE SAMPLE PLATE FROM MICROMETER KIT FOR BRIEF ORIENTATION AND PRACTICE.
3. FOCUS ON UNDAMAGED SURFACE A WITH FOCUSING THIMBLE AND PRESS "ZERO/ABS" BUTTON. RE-CHECK THAT THE DISPLAY READS "0.000" WHEN SURFACE IS IN SHARPEST FOCUS.
4. WITHOUT MOVING THE MICROMETER, FOCUS (CLOCKWISE) DOWN INTO ADJACENT CORROSION PIT (SURFACE B). FOCUS PAST SURFACE B, MAKING SURE NO LOWER AREAS ARE FOUND, THEN FOCUS PRECISELY ON SURFACE B.

NOTE

THE TRIPOD BASE AND MICROMETER SHOULD REMAIN STATIONARY WHEN MEASURING FROM SURFACE A TO SURFACE B, AND BOTH SURFACES SHOULD BE WITHIN THE FIELD OF VIEW.

5. TAKE READING FROM DIGITAL DISPLAY. THIS IS THE DEPTH OF THE CORROSION PIT (THE DIFFERENCE IN HEIGHTS BETWEEN SURFACES A AND B).
6. REPEAT A FEW TIMES AND SELECT THE DEEPEST READING AQUIRED AS PIT DEPTH.

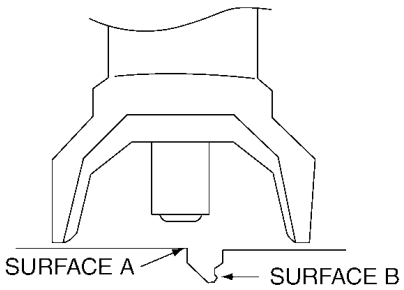

AWSCCC035

Figure 4-4. Optical Depth Micrometer (Digital Read Out Type)

4.3 EVALUATION OF CORROSION DAMAGE.

Visually determine if the corrosion is present in an area which has previously been reworked. If the corrosion damage is in a previously reworked area, measure the damage to include the material which has previously been removed. A straight edge and a 10X magnifying glass may be used to assist in determining if an area has previously been reworked. Place the straight edge across the area being examined at various angles and check for irregularities, low spots, or depressions (refer to Figure 4-5). If any irregularities, low spots, or depressions are found, and a visual determination cannot verify previous rework, closely examine the suspected area and the surrounding area using the 10X magnifying glass. After determining that the area has been previously reworked, evaluate the depth of the previous rework (grind-out) to

determine if further metal removal will exceed grind-out limits specified in the applicable aircraft, missile, or equipment system peculiar manuals or as specified in Paragraph 5.6. Depth measurements can also be made using the depth gauges as described in Paragraph 4.2.2 and Paragraph 4.2.4.

4.4 DEGREES OF CORROSION.

Corrosion must be evaluated after the initial inspection and cleaning to determine the nature and extent of repair or rework needed. It is difficult to draw a distinct and specific dividing line among the degrees of corrosion, so reliable evaluation requires sound maintenance judgment. Use the following categories in reporting degrees of corrosion:

4.4.1 Light Corrosion. This degree of corrosion is indicated by the protective coating being scraped, gouged, or chipped to bare metal, or showing the tracks of filliform corrosion in the film and the bare metal showing is characterized by discoloration of surface corrosion and/or pitting to a depth of approximately one mil (0.001 inch) maximum. This type of damage can normally be removed by light hand sanding.

4.4.2 Moderate Corrosion. This degree of corrosion looks somewhat like light corrosion except some blisters or evidence of scaling and flaking of the coating or paint system is present, and the pitting depths may be as deep as 10 mils (0.010 inch). This type of damage is normally removed by extensive hand sanding or light mechanical sanding.

4.4.3 Severe Corrosion. The general appearance of this degree of corrosion is similar to moderate corrosion in the appearance of the coating system but with severe intergranular corrosion cracks and blistering exfoliation with scaling or flaking of the metal surface. The pitting depths are deeper than 10 mils (0.010 inch). This damage must be removed by extensive mechanical sanding or grinding and may require a patch type repair or component replacement.

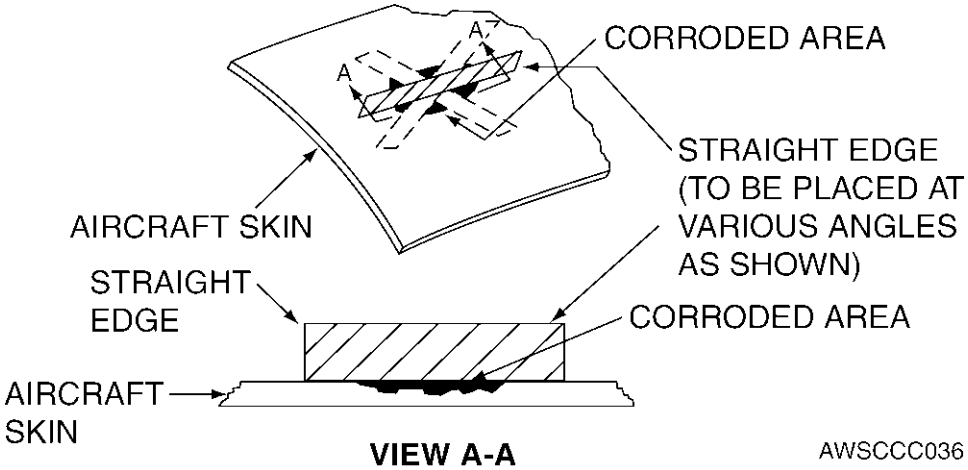

Figure 4-5. Typical Use of a Straight Edge to Determine if Suspect Areas Have Been Previously Reworked

SECTION II CORROSION PRONE AREAS

4.5 COMMON AREAS.

There are certain corrosion prone areas common to all aircraft, missiles, and equipment. (refer to Figure 4-6 through Figure 4-25). Corrosion prone areas should be cleaned, inspected, and treated more frequently than less corrosion prone areas. The following paragraphs describe the areas and contain illustrations to aid in inspections. However, the list is not complete and should be expanded by referring to the system peculiar maintenance manuals and cards for each specific aircraft, missile, or piece of equipment which show other possible trouble spots.

4.5.1 Fasteners. There are hundreds to thousands of fasteners on aircraft, missile and equipment exterior surfaces, and areas around these fasteners are trouble spots (refer to Figure 4-6 and Figure 4-7). These areas are subject to high operational loads and/or moisture intrusion which makes the

skin material highly susceptible to corrosion at fastener locations. High strains cause paint to crack around the fasteners which provides a path for corrosive materials to enter the joint between fastener heads and skin panels. Any paint that is not highly flexible will crack to some degree around fasteners.

4.5.2 Faying Surfaces and Crevices. Similar to corrosion around fasteners, corrosion in faying surfaces, seams, and joints is caused by the intrusion of salt water and/or other corrosive fluids or agents. Entry of fluids by capillary action causes corrosive liquids to flow into the tightest of joints. The effect of corrosion resulting from fluid intrusion into joint areas is usually detectable as bulging of the skin surface.

4.5.3 Spot-Welded Assemblies. Spot-welded assemblies are particularly corrosion prone due to entrapment of corrosive agents between the parts of the assemblies (refer to Figure 4-8 and Figure 4-9). Corrosive attack causes skin buckling or spot-weld bulging (refer to Figure 4-9) and eventual spotweld fracture. Skin and spot-weld bulging may be detected in their early stages by sighting or feeling along spot-welded seams. This condition is prevented by keeping potential moisture entry points such as gaps, seams, and holes created by broken spot-welds, filled with a sealant or a suitable preservative or CPC.

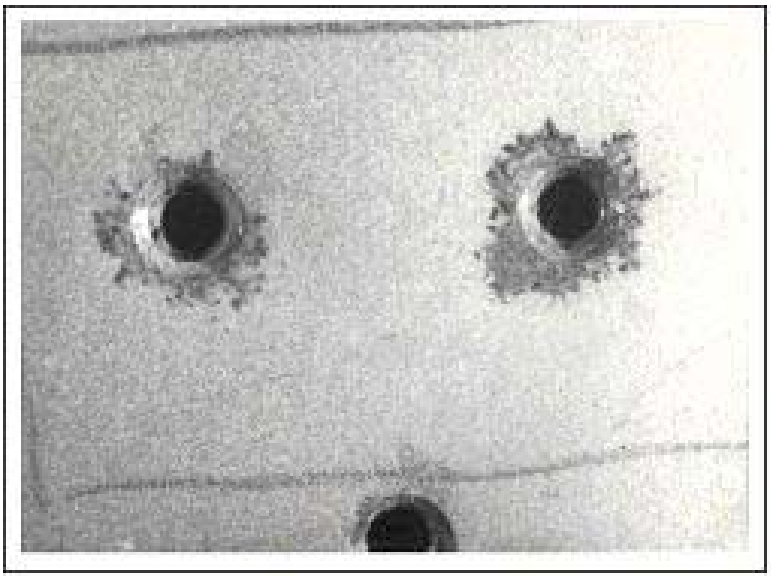

Figure 4-6. Corrosion Around Fasteners

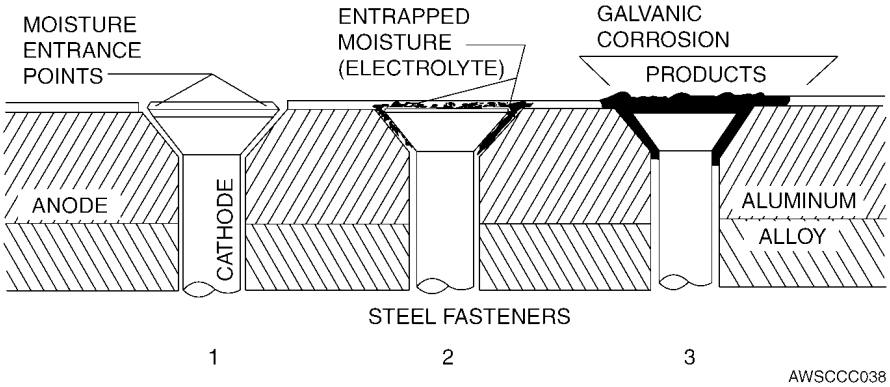

Figure 4-7. Galvanic Corrosion of Aluminum Adjacent to Steel Fasteners

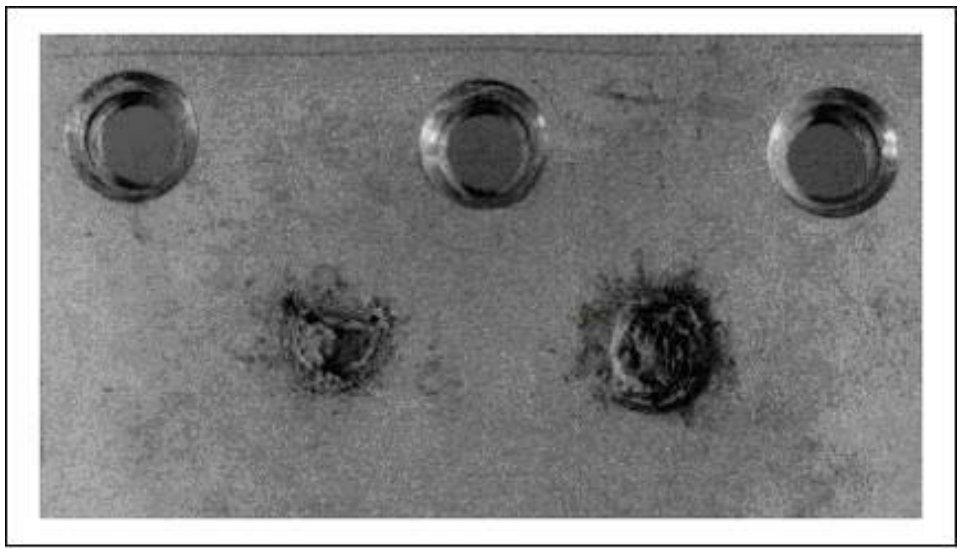

Figure 4-8. Spot Weld Corrosion

4.5.4 Engine Exhaust and Gun Gas Impingement Areas. Exhaust and gun gas impingement areas include areas on an aircraft, missile, or piece of equipment exposed to engine, rocket, missile, and equipment exhaust, gun blast or any other surface exposed to them on installed equipment. These gases cover the organic finish on the surface with deposits (i.e. corrosive ash and residual solids) that damage the finish. Surfaces located in the path of rocket and gun blasts, including gun compartment systems and spent ammunition collection chutes, are particularly susceptible to deterioration and corrosion (refer to Figure 4-10). In addition to the corrosive effect of the gases and exhaust deposits, the protective finish is often blistered by the heat, blasted away by the high velocity gases, or abraded by spent shell casings or solid particles from engine, gun, and rocket exhausts/gases (refer to Figure 4-11). These areas require more attention during inspections.

4.5.5 Wheel Wells and Landing Gear. Wheel well areas probably receive more abuse than any other area on an aircraft. They are exposed to water spray, mud, salt and other runway deicing agents, gravel, and other flying debris from runways during taxiing, takeoff, and landing. They are also exposed to salt air and spray when aircraft are parked at locations near salt water. Because of the many complicated shapes, assemblies, and fittings in the area, complete coverage with protective coatings is difficult to maintain (refer to Figure 4-12).

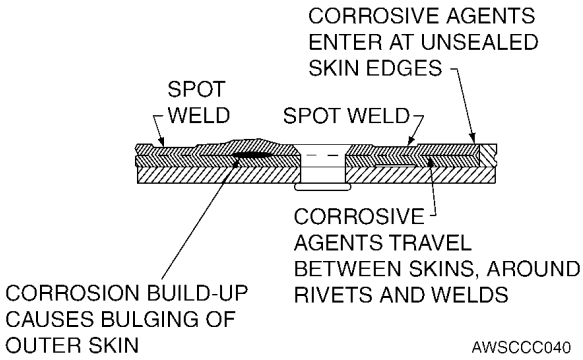

Figure 4-9. Spot Welded Skin Corrosion Mechanism

4.5.6 Flap and Slat Recesses. Flap and slat recesses/wells (refer to Figure 4-13) and equipment installed in them are normally hidden from view since flaps and slats are usually maintained in the retracted/closed position when an

aircraft is on the ground, and they may experience corrosion that goes unnoticed unless special inspections are performed.

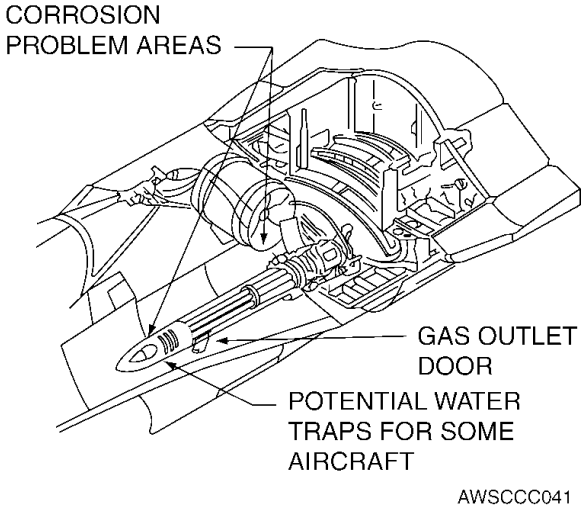

Figure 4-10. Gun Blast Area Corrosion Points

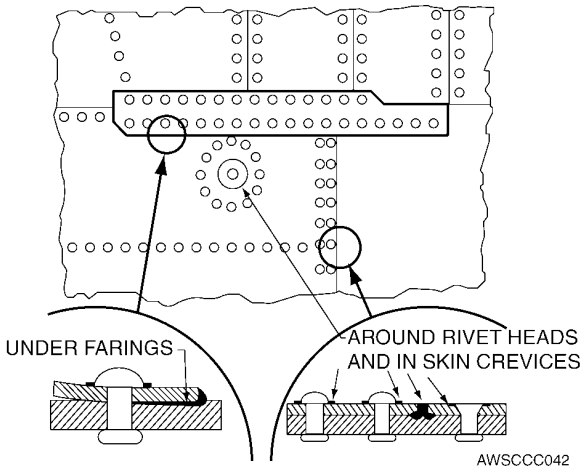

Figure 4-11. Exhaust Trail Area Corrosion Points

4.5.7 Engine Frontal Areas and Air Inlet Ducts. Since these areas are constantly abraded by dirt, dust, and gravel, and eroded by rain, special attention shall be given to:

a. Engine frontal areas (refer to Figure 4-14 and Figure 4-15) for general surface corrosion, pitting, intergranular corrosion, and erosion.

b. Leading edges of air inlet ducts, including hardware inside ducts (refer to Figure 4-17 and Figure 4-16) for damaged/deteriorated protective coating/paint system, galvanic corrosion at fastener locations, general surface corrosion, exfoliation corrosion, and erosion .

c. Due to heat dissipation requirements, oil cooler cores and reciprocating engine cylinder fins are not usually painted. Engine accessory mounting bases may have small, unpainted areas on the machined mounting surfaces. With moist, salt-laden air flowing over these surfaces, they are vulnerable to general surface corrosion/rusting and pitting.

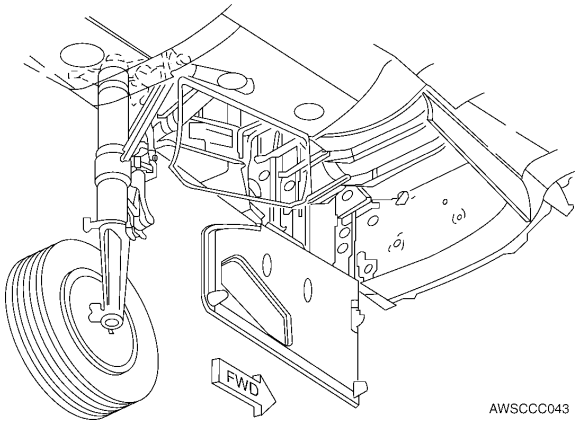

Figure 4-12. F-15 Nose Landing Gear Wheel Well

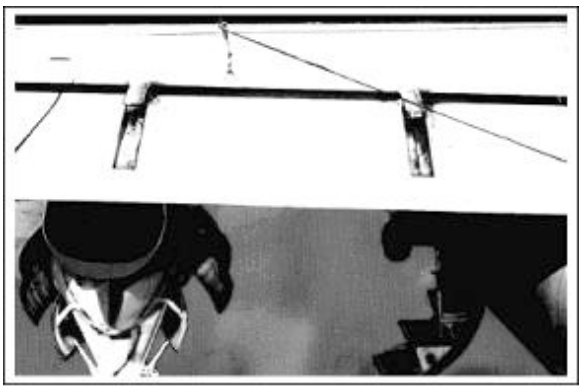

Figure 4-13. Flaps Lowered to Expose Recess Areas

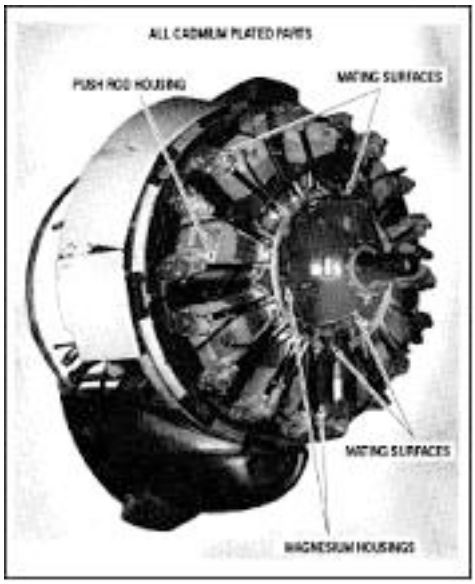

Figure 4-14. Reciprocating Engine Frontal Area Corrosion Points

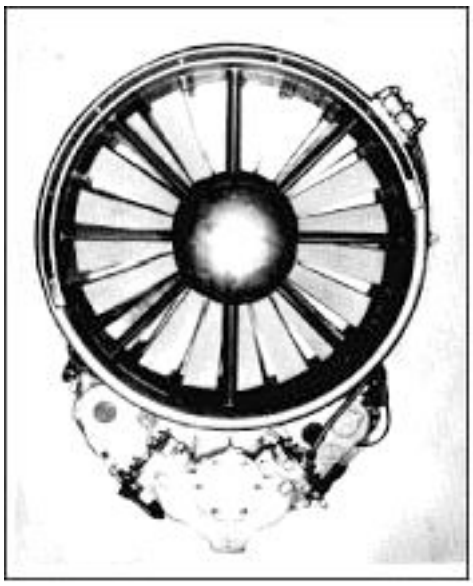

Figure 4-15. Jet Engine Frontal Area Corrosion Points

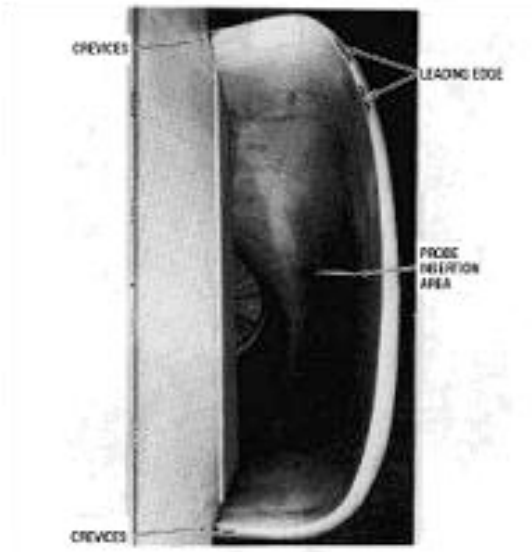

Figure 4-16. Corrosion Prone Point of Air Inlet

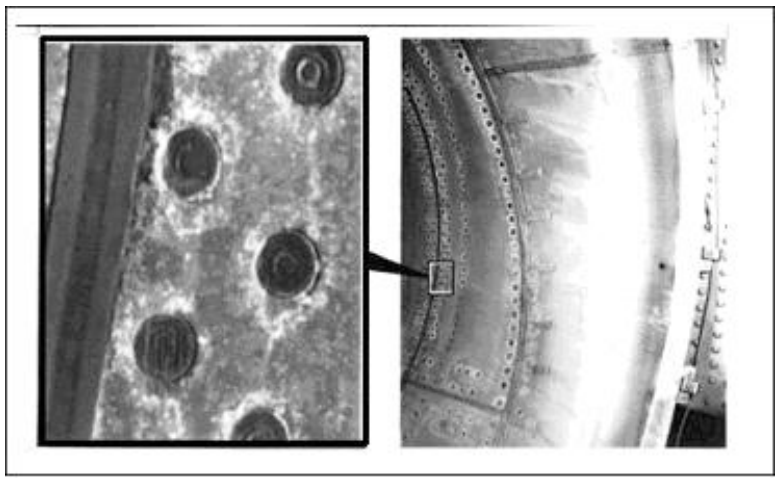

Figure 4-17. Corrosion in Air Intake Duct

4.5.8 Wing/Fin-Fold Joints and Wing and Control Surface Leading Edges.

a. Wing and fin-fold areas are vulnerable to corrosive attack when the wings or fins are folded, so they require special attention (refer to Figure 4-18).

b. Both wing and control surface leading edges on aircraft are constantly exposed to salt laden air and wind erosion which make them vulnerable to corrosion, so they both require special attention.

4.5.9 Hinges. Hinges (refer to Figure 4-19 and Figure 4-20) are highly susceptible to corrosion because of dissimilar metal contact that results from wear and damage to protective metallic coatings. They are natural traps for dirt, salt, and moisture. Piano type hinges which are used extensively on aircraft hatches and control surfaces are especially vulnerable to attack.

4.5.10 Control Cables. Control cables present a corrosion problem whether they are made of carbon steel or stainless steel. As shown in Figure 4-21, the presence of bare spots in the plastic cladding on clad cables or missing or gaps in the protective CPC coating are the main contributing factors to the corrosion of cables. Dirt, grime, and rust that collect between cable strands lead to more severe corrosion and wear that eventually cause cable failure.

4.5.11 Relief Tube Outlets. Urine products are very corrosive (refer to Figure 4-22). Relief tube areas should be cleaned frequently and the paint finish kept in good condition. The relief tubes are usually made of plastic and do not present a corrosion problem, but the surrounding metallic aircraft fuselage structure can be severely corroded by urine products.

4.5.12 Water Entrapment Areas. Figure 4-23 shows common water entrapment areas. Design specifications require that aircraft have drains installed in all areas where water may collect, but in many cases these drains are ineffective either because of improper location or because they are plugged by sealants, fasteners, dirt, grease, and/or other debris. The plugging of a single drain hole or the altering of the attitude of the aircraft can cause serious structural defect if salt water or other corrosives remain for any appreciable amount of time in one of these entrapment areas. Daily inspection and cleaning, if necessary, of low point drains is a standard requirement. These areas may accumulate water following washing or rinsing of aircraft. Where this is a recurring problem, field units shall request the aircraft SPD to develop procedures to prevent water accumulation. Drain holes shall not be drilled by field units unless specifically authorized by the aircraft SPD.

4.5.13 Bilge Areas. Aircraft bilge areas are natural collection points (i.e., low points/areas in an aircraft fuselage) for water, salt water, dirt, loose fasteners, drill shavings, and other debris (refer to Figure 4-24). Keeping bilge areas free of debris and fluids, maintaining the protective finish system in good condition, and application of CPC's as required in aircraft system peculiar maintenance manuals are the best protection against corrosion in bilge areas.

4.5.14 Battery Compartments and Battery Vent Openings. In spite of protective paint systems, corrosion preventive compounds, and venting provisions, battery compartments are high corrosion problem areas (refer to Figure 4-25). Fumes from overheated battery electrolyte will spread to adjacent internal cavities causing rapid corrosion of unprotected surfaces. If the battery installation has an external vent opening on the aircraft, missile, or equipment skin, include this area in battery compartment inspection and maintenance procedures. Frequent cleaning and neutralization of deposits will minimize corrosion. Leakage of electrolytes of either sulfuric acid from lead-acid batteries or

potassium hydroxide from nickel-cadmium batteries will cause corrosion. Consult the applicable system peculiar maintenance manuals of the particular aircraft, missile, or piece of equipment to determine which type of battery is used. Refer to Chapters 3, 8 and system peculiar maintenance manuals for instructions on neutralizing battery electrolytes.

4.5.15 Magnesium Parts. Magnesium parts are extremely corrosion prone. Special attention must be given to proper corrosion preventive surface pretreatment of their surfaces, insulation from contact with other metal surfaces, and maintenance of protective paint coatings.

4.5.16 Electrical Connectors and Other Components. Some electrical connectors are potted with a sealant compound to prevent the entrance of water into the backside areas of connectors where wires are attached to pins. Rubber O-rings are also used to seal moisture out of the front side or pin mating areas of connectors when two connector halves are mated together. If moisture gets into electrical plugs, it will cause corrosion and electrical failure. Electrical plugs must be disconnected periodically for inspection and corrosion treatment. The use of improper and unauthorized sealants, potting compounds, and corrosion preventive compounds can cause severe corrosion damage and/or electrical failure of electrical connectors or components. Refer to TO 1-1-689 for authorized materials and procedures for use on avionics and other electronic and electrical equipment

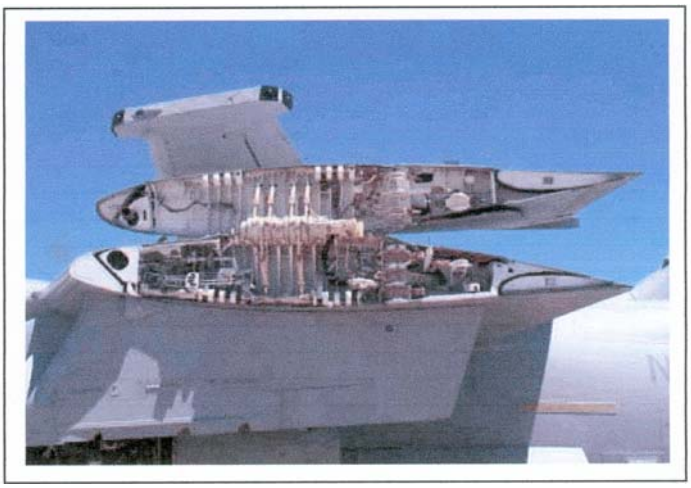

Figure 4-18. Wing Fold Joint

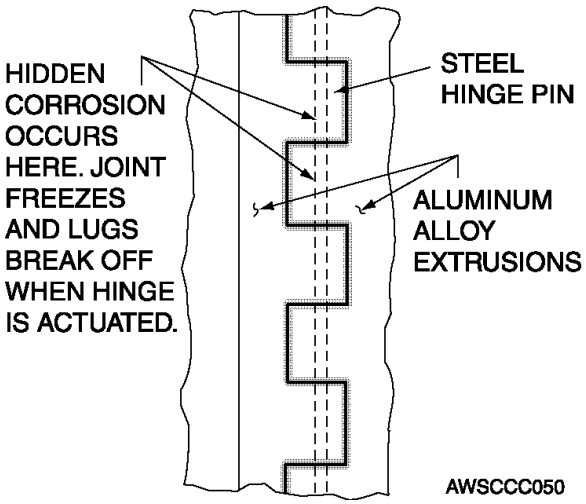

Figure 4-19. Hinge Corrosion Points

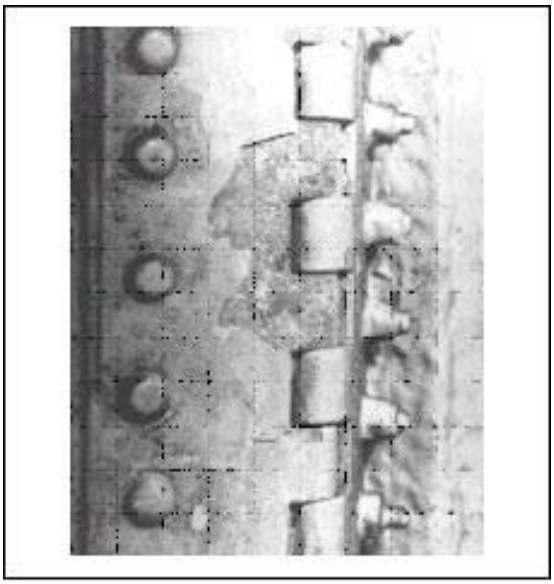

Figure 4-20. Piano Hinge Lugs

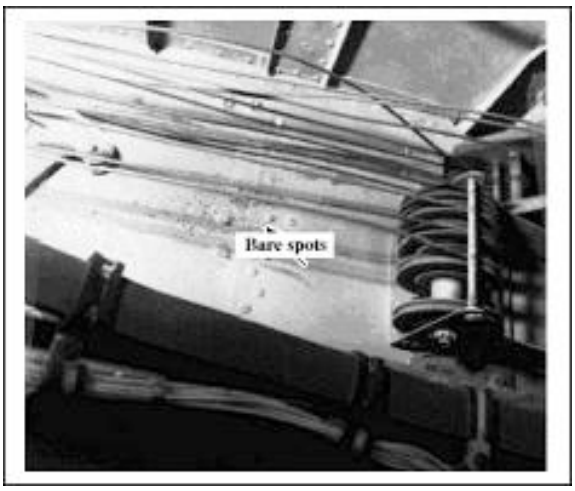

Figure 4-21. Control Cables

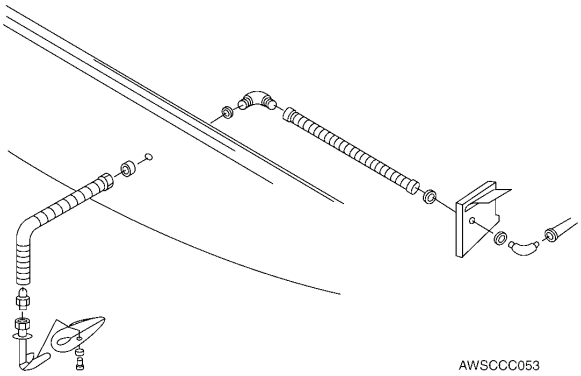

Figure 4-22. Personnel Relief Tube Vent

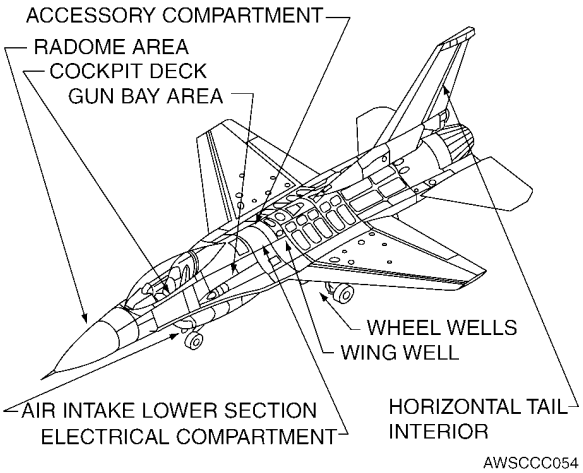

Figure 4-23. Common Water Entrapment Areas

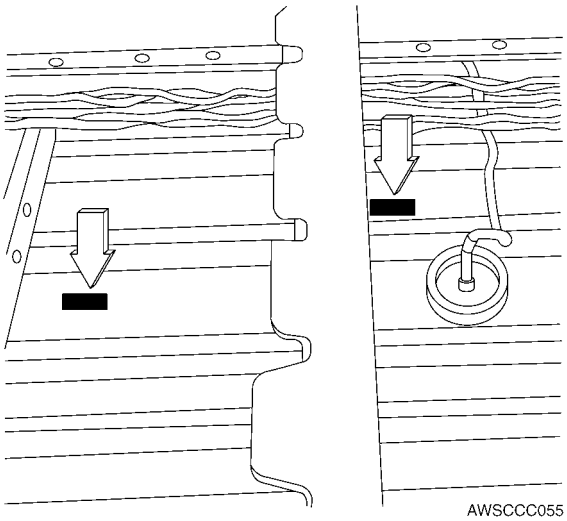

Figure 4-24. Bilge Areas

Figure 4-25. Battery Compartment

CHAPTER 5
CORROSION REMOVAL AND SURFACE TREATMENT

SECTION I CORROSION REMOVAL

5.1 PURPOSE.

This chapter covers procedures for corrosion removal and surface treatment. When corrosion is detected, a specific and immediate corrective action is required. Each type of corrosion has its own peculiarities and requires special treatment. Complete treatment involves a thorough inspection of all corroded areas, evaluation of the corrosion damage (refer to Chapter 4), paint removal per TO 1-1-8, corrosion removal per this chapter, application of chemical surface treatments per this chapter, sealing (refer to Chapter 6), and application/touch-up of protective paint finishes per TO 1-1-8.

5.2 RESPONSIBILITY.

CAUTION

Propellers and helicopter blades have critical balance requirements. Refer to the appropriate system peculiar propeller or blade manual for evaluation and repair limits for corrosion, erosion, and abrasion damage.

Personnel assigned to perform corrosion removal corrective maintenance tasks shall be specially trained in the use of chemical paint removers, abrasive materials, powered and hand tools, depth and area measurement of metal removed, and determination of damage limits from the applicable system peculiar maintenance manuals. Inadequate training will lead to further damage of equipment and poses a safety hazard to the individual.

5.3 CORRECTIVE ACTIONS.

Corrective maintenance depends on: the type of surface involved (metallic or composite); the area of the damaged surface (small corrosion spot or large heavily corroded area); and the degree of corrosion, as determined in Chapter 4. Composite materials, such as fiberglass or graphite-reinforced structures, shall not be exposed to chemical paint remover, but shall only be scuff sanded to the primer coat. Since composite materials do not corrode, corrosion removal techniques are not applicable and shall not be used. Corrosion shall always be removed by the mildest effective technique. For mechanical procedures specific to the various metal alloys, refer to Table 5-3 and Table 5-4.

5.4 PAINT REMOVAL.

Refer to TO 1-1-8 for proper paint removal procedures. Choose the most effective method that produces the least amount of hazardous waste and danger to personnel for the job to be accomplished.

5.5 CORROSION REMOVAL.

Corrosion can be removed by either mechanical or chemical methods. Certain factors must be considered prior to starting any corrosion removal operation. The most important factor is that corrosion products must be removed completely without causing additional damage to the structure during the process. This can be accomplished by first removing all corrosion visible through a 10X magnifying glass, then removing an additional two mils (0.0020 inch) to ensure that all deposits have been eliminated. Failure to remove all corrosion allows the corrosion to continue even after affected surfaces are refinished. Additional factors to consider are as follows:

a. Before attempting to remove corrosion products, strip the paint and clean contaminants from the surface. Surface contaminants and paint interfere with corrosion removal procedures and make the operation more difficult.

b. Protect adjacent components and parts from corrosion residue and possible damage that could be caused by the removal operation. Corrosion residue can cause additional corrosion and damage the surface finish of the surrounding area. An accidental slip of a corrosion removal tool can quickly result in additional damage.

c. Prior to corrosion removal, determine the allowable limits from the system peculiar aircraft, missile, and/or equipment manuals and/or technical orders. When removing corrosion from critical aircraft, missile, or equipment structure, take the following steps:

(1) If allowable metal removal or damage limits will not be exceeded, remove corrosion completely. Metal loss due to corrosion damage is cumulative. Metal

loss from prior corrosion removal operations and corrosion removal from areas on the opposite side of a part must be considered when assessing the degree of corrosion damage.

(2) If allowable damage limits will be exceeded, repair the damaged area or replace parts per procedures in system peculiar aircraft, missile, or equipment repair manuals/technical orders. Coordinate any repair or part replacement not covered in these manuals/ technical orders with the aircraft SPD or the missile or equipment SPM.

5.5.1 Mechanical Methods. There are various mechanical methods for removing corrosion from metal surfaces. The method used and the types of tools and equipment selected for the removal operation depend on the type of metal involved, the location and accessibility of the corroded area, the degree of damage, and the type of corrosion involved. It is important that the removal method, tools, and equipment selected be compatible with the metal surface. Compatibility involves two considerations: the mechanical effect of the equipment and tools on the surface and the compatibility of metallic particles worn off the removal equipment and tools which might become embedded in the metal surface.

5.5.1.1 Mechanical Compatibility.

CAUTION

Corrosion removal accessories/tools, such as flap brushes or rotary files, shall be used on one type of metal only. For example, a flap brush used to remove corrosion from aluminum alloys shall not be used to remove corrosion from magnesium alloys or steel also.

Mechanical compatibility refers to the selection of the right tools and equipment to prevent additional damage caused by the removal process. Often it is necessary to select a series of removal techniques involving the use of different grades or classes of equipment and material to effectively remove the corrosion products. The initial use of a rapid and coarse removal method followed by a slower and finer removal method produces a smooth metal surface finish (e.g. using a vacuum blaster first followed by using a fine abrasive cloth or paper to finish the job).

5.5.1.2 Material Compatibility. Material compatibility refers to using a medium for brushing, abrading, blasting, etc., that will not cause additional corrosion. Material compatibilities are assured by using like metals during corrosion removal operations (e.g. regular carbon steel wool shall never be used to remove corrosion from aluminum alloys as it will embed in the aluminum alloy surface and cause galvanic corrosion).

5.5.2 Non-Powered Tools and Materials.

5.5.2.1 Abrasive Mats. Abrasive mats are made from a nylon mesh material impregnated with various grades of aluminum oxide. Abrasive mats are available in 9 x 11 inch sheets under A-A-58054, Type I, Class 1, Grade A - Very Fine (280-400 grit), Grade B - Fine (180 grit), and Grade C - Medium (100-150 grit). These mats are used by hand to remove small areas of corrosion and/or paint where the use of powered tools would be impractical or prevented by the shape or accessibility of the area. Table 5-1 is a guide for relating abrasive mat materials to coated abrasive paper and/or cloth grit particle sizes.

5.5.2.2 Abrasive Cloth. Abrasive cloths with bonded aluminum oxide grit per A-A-1048 and silicon carbide grit per A-A-1200 are used for dry sanding of light to moderate corrosion products. They are available in 9 x 11 inch sheets and 2 or 3 inch wide x 150 foot long rolls in 240 grit (fine) and 320 grit (very fine) grades.

Table 5-1. Grades of Abrasive Mats

Grade	Coated Abrasive (CA) Equivalent
Medium (C)	100- 150
Fine (B)	180 - 240
Very Fine (A)	240- 320
Super Fine (AA)	500 & finer
Ultra Fine (AAA)	10 microns & finer

Table 5-2. Grades of Steel Wool

Type	Grade	Use
	Very Fine	Final smoothing

Table 5-2. Grades of Steel Wool - Continued

Type	Grade	Use
II	Fine	Most commonly used
III	Medium	General purpose
IV	Coarse	Rough work
V	Extra coarse	Restoration work

5.5.2.3 Abrasive Paper. Heavy paper with silicon carbide grit bonded to it per A-A-1047 is used for either wet or dry sanding to remove light to moderate corrosion. It is available in 9 x 11 inch sheets in 240 grit (Fine) and 320 grit (Very Fine) grades. Silicon carbide is usually more effective than aluminum oxide on harder metals such as low carbon and corrosion resistant steel alloys. Other abrasive paper and cloth with bonded emery or flint are available, but they suffer from poor efficiency and short working life.

5.5.2.4 Metallic Wools. Metallic wools are abrasive materials used for removing corrosion that is not tightly bonded to a metal surface. The four major types of metallic wools are: aluminum, copper, stainless (CRES) steel, and carbon steel. Metallic wools are available in five grades, ranging from very fine to extra coarse. Table 5-2 is a guide to help select the correct grade of metallic wool.

5.5.2.4.1 The type of corroded metal must be known before using metallic wool. Carbon steel wool is used on low carbon steel alloys; aluminum wool is used on aluminum and magnesium alloys; copper wool is used on copper, bronze, and brass alloys; and stainless steel wool is used on stainless (CRES) steel alloys. The use of metallic wools which are not galvanically compatible with the metal surface being treated is not authorized. These metallic wool materials are very good for removing corrosion from tubing or extruded parts. Remove all metallic wool residue from the metal surface being treated and the surrounding area with a vacuum cleaner. Metallic wool particles can create galvanic cells if left on the metal surface.

5.5.2.5 Wire Brushes. Wire brushes are available with carbon steel, stainless (CRES) steel, aluminum, and brass bristles and are used to remove heavy corrosion deposits and flaking paint that are not tightly bonded to the metal surface. Densely set, short, stiff bristles are most effective for rapid corrosion removal. The metallic bristles must be compatible with the metal surface being treated to prevent galvanic corrosion with stainless (CRES) steel being considered neutral and usable on all metals. Do not use brushes with a bristle wire gauge or diameter above 0.010 inch, as severe gouging of the surface leading to stress risers and fatigue cracking may occur. Remove the corrosion with a linear motion; do not cross-hatch as this will unnecessarily damage the surrounding surface area. After wire brushing, the surface areas must be polished with fine abrasive paper to remove and/or smooth out gouges and scratches.

5.5.2.6 Pumice Powder. Pumice powder is a very fine and soft abrasive used to remove stains or to remove surface corrosion on thin metal surfaces where minimum metal removal is allowed. It is mixed with water and then rubbed over the area with a soft cloth to polish the surface. After the corrosion is removed, the powder is wiped off the surface with a clean cloth wet with fresh water.

5.5.2.7 Scrapers. Scrapers are used primarily for the initial removal of heavy corrosion deposits such as flaking rust and exfoliation blisters, and are particularly effective in corners and crevices that cannot be reached with other equipment. Scrapers may be locally manufactured from phenolic plastic, fiberglass, aluminum alloys, plain carbon steel or carbide-tipped carbon steel, or stainless (CRES) steel. Plastic and fiberglass scrapers may be used on any type of metal surface but are of limited value due to their softness relative to a metal surface; stainless (CRES) steel and carbide-tipped carbon steel scrapers may be used on any type of metal surface; aluminum alloy scrapers may be used only on aluminum or magnesium alloy surfaces; and plain carbon steel scrapers may be used only on carbon steel surfaces. Scrapers made from copper or brass alloys shall never be used on any structural metal surface as galvanic corrosion will result. Failure to use the correct metal scraper can also lead to galvanic corrosion after the part is returned to service.

Surface areas must receive further finishing after corrosion removal with scrapers due to the gouging action of scrapers and the difficulty in determining complete corrosion removal after their use.

5.5.3 Power Tools and Materials.

WARNING

- Power tool operations can often generate toxic airborne particles containing heavy metals, such as chromium (in the form of chromates), titanium, nickel, and beryllium, depending on the surface being treated. Eye protection, ventilation, and an adequate respirator for dust control are required.
- Do not use hands to probe for air leaks in power tools and their hoses as injury may result.
- Before using any powered equipment, remove any clothing such as ties and shirts with long loose sleeves as well as all rings and other jewelry which might become entangled in the equipment. Always wear proper personal safety equipment (PPE), such as goggles, face-shields, respirators, etc. Ensure that all electrical equipment is grounded.
- Corrosion removal with power tools is a very aggressive method which shall only be used when and where the extent of corrosion makes non-powered corrosion removal impractical. The indiscriminate use of power tools for corrosion removal can result in damage to protective surface finishes.

Power tools are used to remove heavy corrosion from localized areas on metal surfaces or mild to severe corrosion over large surface areas. Their use results in saving time and money, but care must be exercised when using power tools. Application of excessive pressure can easily damage metal surfaces and cause internal metallurgical changes in the metal due to excessive heat buildup.

5.5.3.1 Pneumatic Drill Motors. Pneumatic drill motors are the preferred power tools for removing heavy corrosion or reworking large surface areas. The drill motor is normally used with wire brush wheels, rotary files, flap brushes, sanding pads, abrasive wheels, or buffing wheels. These drills are available in many shapes and sizes to satisfy almost any requirement. Check all pneumatic equipment air hoses for breaks or bulges in the coverings.

5.5.3.1.1 Maximum chuck capacity of portable powered drills is usually ¼ inch. Insert the tool shank into the drill and tighten chuck securely with the chuck key prior to use. When it is difficult or impossible to reach the work area with a straight drill, use a flexible shaft or angle adapter. The flexible shaft permits working around obstructions with a minimum of effort.

5.5.3.1.2 To prevent the rotary file, abrasive wheel, flap brush, or sanding disc from digging into the metal, keep the tool off the metal when initially starting the drill motor. When the abrading stroke is finished, lift the tool from the metal before releasing the power to the motor.

5.5.3.1.3 Holding the drill motor with both hands, apply moderate pressure while holding the rotary file, sanding disc, flap brush, or abrasive wheel against the work surface. When using the pneumatic tool as a sander, be sure to check the size and type of the abrasive disc. Ensure that the type of disc is compatible with the metal. Keep the sanding disc tilted to approximately a 10 degree angle so that only one side of the disc is in contact with the metal surface. If the entire disc surface is in contact with the surface, a “bucking” effect will occur. Excessive pressure will cause a“chattering” effect. Move the tool over the surface with slightly overlapping strokes. Do not grind, sand, or file in one area for any extended length of time without stopping and allowing the metal to cool. Excessive heating of the metal will alter its metallurgical structure.

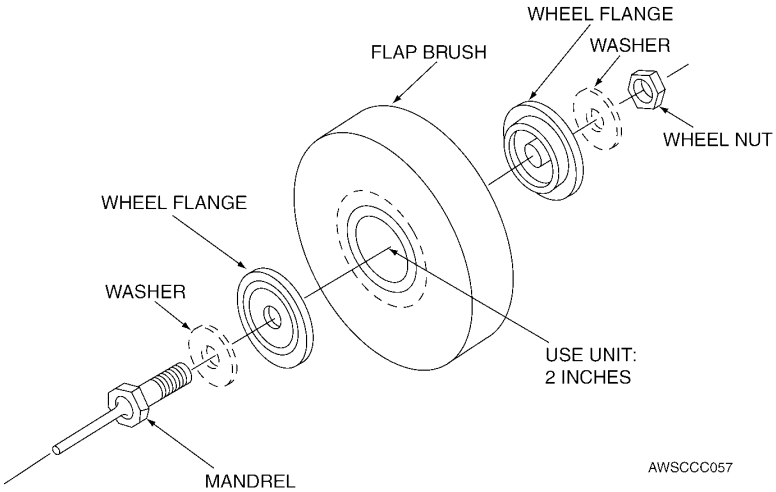

Figure 5-1. 3M Co. Scotch-Brite™ Flap Brush and Mandrel

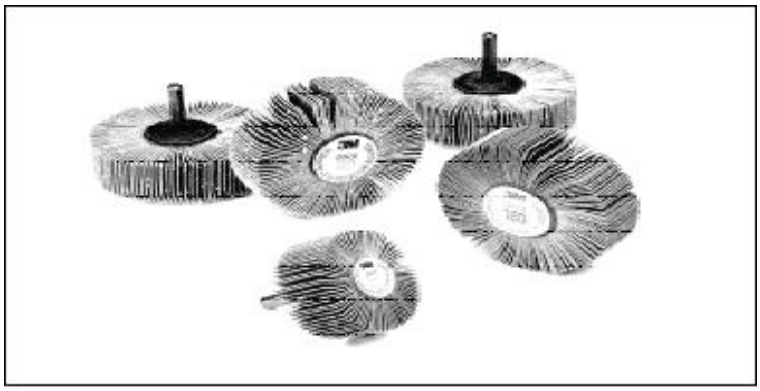

Figure 5-2. Abrasive Flap Wheels with Spindle Mount

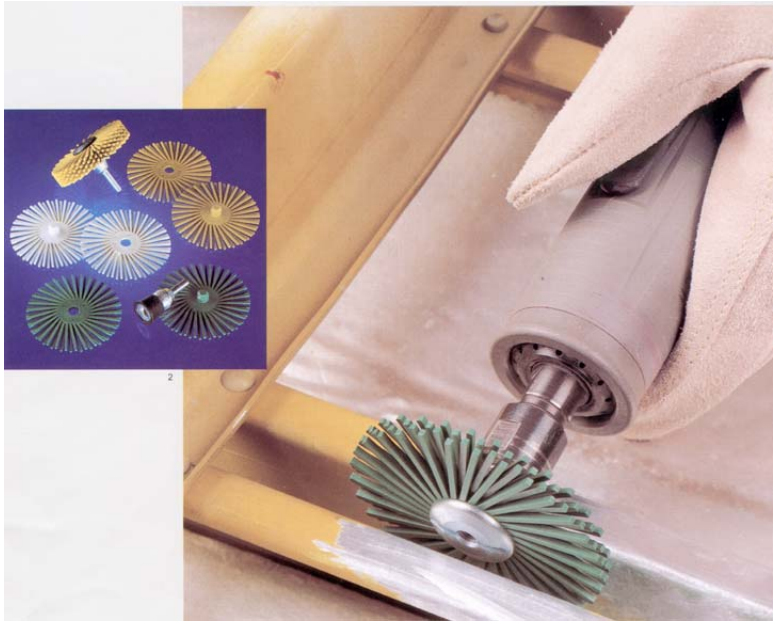

Figure 5-3. 3M Co. Radial Bristle Disc

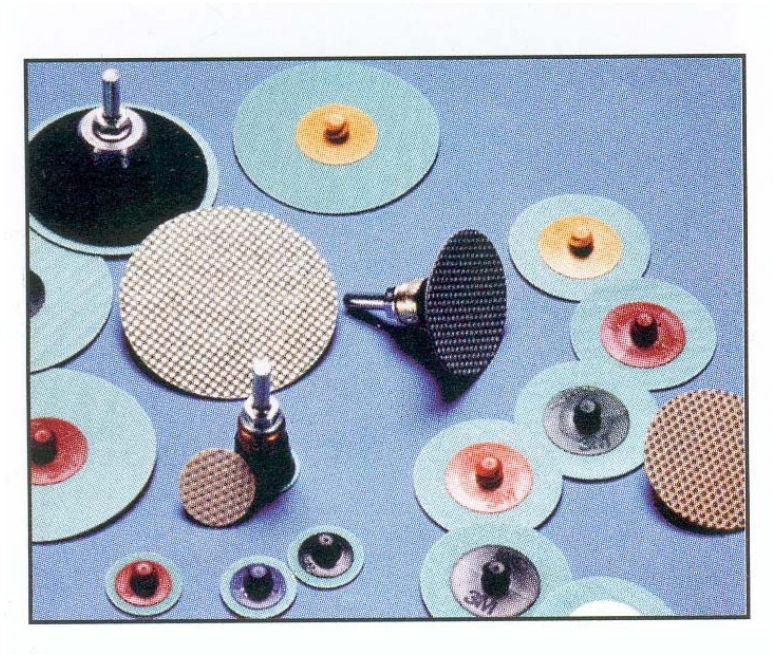

Figure 5-4. 3M Co. Roloc Discs

5.5.3.2 Pneumatic Sanders. The proper technique for using pneumatic sanders with oscillating heads shall include the following:

5.5.3.2.1 To prevent the sander from digging into the metal, start the sander before it touches the metal. When the sanding stroke is finished, lift the sander from the metal before pressing the stop switch. Do not lay the unit down with the motor running.

5.5.3.2.2 For best results, apply moderate pressure while holding the sander against the work. Move the sander over the surface with parallel and slightly overlapping strokes. Move it as slowly as possible without causing overheating of the metal. Generally, the coverage rate should be about two square feet per minute.

5.5.3.3 3M Co. Scotch-Brite™ Finishing Flap Brushes.

CAUTION

Do not use flap brushes (refer to Figure 5-1) down to within 2 inches of core. Continued use beyond this limit may cause gouging due to loss of flexibility of fiber. When using flap brushes, apply minimal pressure to remove a minimum amount of metal. Excessive pressure on flap brushes will cause paint at the edge of the area being worked to melt, gum up, and streak onto the work area. Do not use on non-metallic surfaces.

Flap brushes are made of non-woven, nylon webbing impregnated with aluminum oxide grit. The brushes are very effective for removing mild surface corrosion and prepping surfaces. It can also be used for mechanical removal and feathering of paint systems. The brushes are comprised of a series of flaps bonded to a cardboard core and attached to a mandrel. Each flap impacts the surface as the brush spins. When used correctly, the brushes will lead to minimal metal removal. The flap brush and mandrel (refer to Figure 5-1) shall be assembled so that the arrow, painted on the brush, is facing the operator and points in the direction of rotation (clockwise). To achieve maximum effectiveness, use at the specified RPM, and do not exceed the maximum RPM rating specified on the brush to prevent disintegration during use and either damage to equipment or injury to personnel.

5.5.3.4 Abrasive Flap Wheels. Abrasive flap wheels come in various types. One type is made of paper flaps impregnated with aluminum oxide abrasive and mounted on a spindle (refer to Figure 5-2). Another type is made from a resin reinforced nylon mesh impregnated with aluminum oxide abrasive in a convoluted flap form per A-A-59292, Class 1 or a unitized, rigid, laminated form per A-A-59292, Class 2, both of which are mounted on arbors. Depending on grit size, these wheels can be used to remove medium to severe corrosion from thick materials, but caution must be used to minimize the amount of metal removal. For the most effective use of this equipment, use at the specified RPM and never exceed the maximum RPM rating specified on the wheel to prevent disintegration of the wheel during use and either damage to equipment or injury to personnel.

5.5.3.5 Abrasive Cloth and Paper. Aluminum oxide and silicon carbide cloth and paper can be used with sanders and drill motors by cutting suitable pieces from stock or using precut discs mounted on pad type holders.

5.5.3.6 Powered Wire Brushes. Powered wire brushes are available with various types of wire (straight, twisted, or crimped), various lengths of wire (short, medium, or long), and various wire densities (light, medium, or heavy). Different actions can be obtained by varying wire type, trim length, and density.

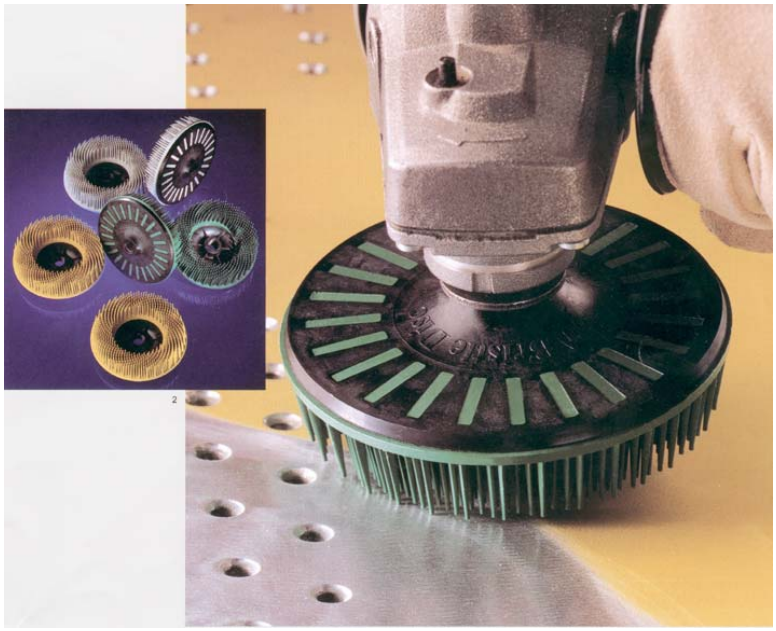

Figure 5-5. 3M Co. Inline Bristle Disc

5.5.3.7 Rotary Files.

CAUTION

Unless authorized and directed by the cognizant aircraft SPD or missile or equipment SPM, rotary wire brushes are not authorized for corrosion removal on any metals except low strength carbon steels. They can severely damage softer metal alloys such as aluminum and magnesium by leaving deep gouges in them and cause fatigue problems in high strength steel and aluminum alloys due to the stress risers created by the deep scratches/gouges they leave on the surface.

Since they provide one of the fastest ways to remove corrosion and underlying metal, rotary files should only be handled by an experienced structural repair technician. This tool is a tungsten carbide cylinder or cone into which cutting edges have been machined. When installed in the chuck of a pneumatic drill, rapid metal removal can be achieved.

5.5.3.8 3M Co. Roloc™ Disc and Radial Disc Abrasives.

CAUTION

Improper use of rotary files can rapidly damage aluminum structures by creating thin spots that exceed established damage limits. Their use is authorized only for removal of severe intergranular or exfoliation corrosion by qualified structural repair technicians. Do not use rotary files to remove corrosion from installed fasteners.

These tools are available in various grits and diameters to cover all corrosion removal requirements from initial grind out to final finishing/smoothing of the grind-out area. The Roloc™ discs consist of a spindle that screws into a disc pad that receives a screw on type paper coated abrasive disc, a Scotch-Brite™ nylon mesh abrasive disc, or a plastic Bristle Disc™ abrasive. These disc assemblies are mounted to either a straight or right angle type pneumatic drill to remove

corrosion from all types of readily accessible metal surfaces. The radial type plastic Bristle Disc™ is similar to a flap wheel and is mounted to an arbor either by itself or in multiples with the assembly being installed in a straight type pnuematic drill to remove corrosion from all types of metal surfaces, particularly in bores and recessed areas. To achieve maximum effectiveness with these discs, use at the specified RPM, and never exceed the maximum RPM rating specified on the disc to prevent disintegration of the disc during use and either damage to equipment or injury to personnel.

5.5.4 Abrasive Blasting.

WARNING

Abrasive blasting operations create airborne particles which may be hazardous to the skin and eyes. A hood, gloves with gauntlets, and adequate ventilation are required.

In abrasive blasting, abrasive media is propelled toward the work piece either with air pressure (conventional or vacuum blasting) or with water (wet blasting).

5.5.4.1 Conventional Equipment. Two types of equipment are used to propel dry abrasives: direct pressure feed and suction/venturi feed. In direct pressure equipment, the abrasive holding tank is a pressure vessel from which abrasive media is forced, through a metering device, into the pressurized blast line to the blast nozzle. In suction/venturi feed equipment, the abrasive holding tank is unpressurized and provides media, through a metering device, into a passing air stream which then propels it through the blast hose to the blast nozzle. Small blast cabinets known as glove boxes (refer to Figure 5-6, A) are built to accommodate small parts and have a recycle system which removes dust and light particle contaminants such as paint chips or corrosion products. Blasting rooms, designed for large components, use a recycling and ventilating system. The operator works within the room, using a blast gun.

NOTE

Suction/venturi feed equipment requires higher nozzle pressure than direct pressure equipment to obtain the required abrasive action. Pressures given in Table 5-3 are for direct pressure equipment. As a general rule, increase the nozzle pressure by 50 percent when using suction/venturi feed equipment.

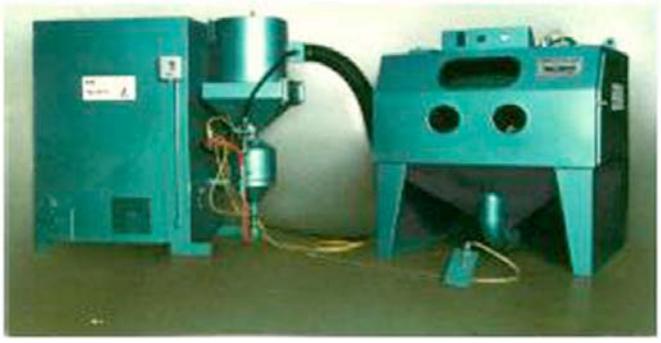

A. GLOVE-BOX UNIT

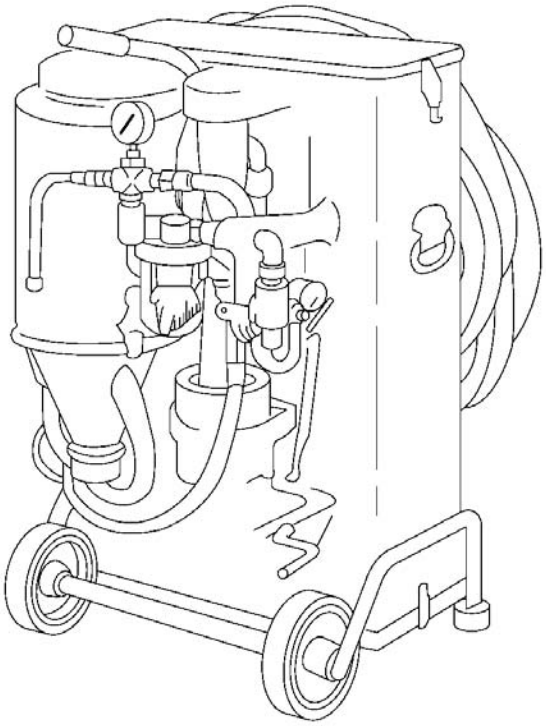

B. DRY-HONING MACHINE

AWSCCC062

Figure 5-6. Abrasive Blasting Equipment

Table 5-3. Recommended Powered Abrasives for Corrosion Removal

Alloy	Flap Brush, Abrasive Wheels [1]	Abrasive Cloth/ Paper [2]	Abrasive Blasting Parameters: Media [3]	Abrasive Blasting Parameters: Pressure (PSI)	Other Tools
Aluminum alloys (Clad)	Aluminum oxide or silicon carbide	Aluminum oxide or silicon carbide	Glass beads (Sizes 10-13) or (AGB-15, 12, 9, or 6)	30-40 [4]	None
Aluminum alloys (Non-clad)	Aluminum oxide or silicon carbide	Aluminum oxide or silicon carbide	Glass beads (Sizes 10-13) or (AGB-15, 12, 9, or 6)	40-45 [4]	Rotary files (fine fluted)
Magnesium alloys	Aluminum oxide or silicon carbide	Aluminum oxide or silicon carbide	Glass beads (Sizes 10-13) or (AGB-15, 12, 9, or 6)	10-35 [4]	Rotary files (fine fluted)
Ferrous metals (other than stainless steel)	Aluminum oxide or silicon carbide	Aluminum oxide or silicon carbide	Aluminum oxide (Type I, Grade A or B); Glass beads (sizes 10-13) or (AGB-15, 12, 9, or 6)	40-50 [4] 40-50 [4]	Rotary files, Wire wheels (steel or stainless steel)
Stainless steel and Nickel alloys	Aluminum oxide or silicon carbide	Aluminum oxide or silicon carbide	[5]Glass beads (Sizes 10-13) or (AGB-15, 12, 9, or 6)	40-50 [4]	Wire wheels (stainless steel) Rotary files (fine fluted)
Copper alloys	**DO NOT USE POWERED ABRASIVE METHODS DUE TO TOXICITY OF RESIDUE/PARTICLES GIVEN OFF - IN PARTICULAR FROM BERYLLIUM-COPPER ALLOYS.**				
	CAUTION Powered abrasive operations on titanium alloys can generate severe sparking. Keep area clear of all ignitable substances when performing powered abrasive operations on titanium alloys.				
Titanium alloys	Aluminum oxide or silicon carbide	Aluminum oxide or silicon carbide	Glass beads (Sizes 10-13) or (AGB-15, 12, 9, or 6); Aluminum oxide (Type I, Grade A or B)	40-50 [4] 40-50 [4]	None
Plated and phosphated surfaces	**DO NOT USE POWERED ABRASIVE METHODS DUE TO TOXICITY OF RESIDUE/PARTICLES GIVEN OFF FROM MANY TYPES OF PLATING AND PROBABLE SEVERE DAMAGE TO VERY THIN PLATING FILMS.**				

(1) This includes RolocTM type discs and inline and radial type Bristle DiscsTM.
(2) This includes RolocTM type discs.
(3) Media specifications: Glass beads - AMS 2431/6 Aluminum oxide - A-A-59316
(4) Indicated pressure is for direct pressure equipment. For suction/venturi equipment, use 50% higher pressure.
(5) Use only on heavily corroded parts prior to acid pickling and/or passivation.

Table 5-4. Recommended Non-Powered Abrasives for Corrosion Removal

Alloy	Non-woven Abrasive	Abrasive Cloth/Paper	Metallic Wool	Brushes	Others
Aluminum alloys	Abrasive Mat	Aluminum oxide, Silicon carbide	Aluminum wool	Stainless steel, Aluminum	Pumice paste, Carbide-tipped scrapers
Magnesium alloys	Abrasive Mat	Aluminum oxide, Silicon carbide	None	Stainless steel, Aluminum	Pumice paste, Carbide-tipped scrapers
Ferrous metals (other than stainless steel)	Abrasive Mat	Aluminum oxide, Silicon carbide	Steel wool	Carbon steel, Stainless steel	Carbide-tipped scrapers
Stainless steel and Nickel alloys	None	Aluminum oxide, Silicon carbide	Stainless steel wool	Stainless steel, Aluminum	None
Copper alloys	None	Aluminum oxide (400 grit), Silicon carbide (400 grit)	Copper wool	Brass	None
Titanium alloys	Abrasive Mat	Aluminum oxide, Silicon carbide	Stainless steel wool	Stainless steel, Aluminum	Pumice paste, Carbide-tipped scrapers
Cadmium or Zinc plated surfaces	Abrasive Mat	Aluminum oxide, Silicon carbide	None	None	None
Chromium, Nickel, Tin, or copper plated surfaces	Abrasive Mat	Aluminum oxide, Silicon carbide	None	Stainless steel, Aluminum	None
Phosphated surfaces	USE METHOD RECOMMENDED FOR BASE METAL				

5.5.4.1.1 Blast Media. A wide variety of materials in various sizes (measured by mesh or grit size) are available for blasting applications. Only aluminum oxide per A-A-59316, Type I, Grades A or B and glass beads per AMS 2431/6, Designation Nos. 15, 12, 9, and 6 (sizes 10-13) abrasives are approved for use on aircraft, missiles, and their components. Other media may be used on steel components of support equipment as designated in TO 35-1-3 and/or the equipment system peculiar maintenance manual.

5.5.4.1.2 Air Hoses. The nozzle pressure of a blast stream is affected by the length and inside diameter (ID) of the air hoses. It is best to use the shortest hose possible to prevent excessive pressure drop due to friction. If it is necessary to couple lengths of hose, use quick disconnect external couplers.

5.5.4.1.3 Blast Nozzles. In general, larger nozzle sizes are preferable to smaller ones, because more area can be cleaned per hour with the same amount of labor. High efficiency, wear resistant nozzles (e.g. tungsten carbide) should be used, since they have a longer service life and direct the blasting particles more efficiently. Inspect nozzles periodically for wear and discard them when the orifice is worn to a diameter which is 50 percent greater than the diameter when new. A worn nozzle, just as a larger nozzle, will require a larger volume of air flow from the compressor to sustain the needed pressure at the nozzle.

5.5.4.1.4 Air Supply. Frictional losses in the hoses reduce the pressure at the nozzle, and nozzle wear increases the volume of air needed to maintain the desired nozzle pressure. To allow for nozzle wear, it is generally good practice to use a compressor with the capability of delivering at least 1½ times the cubic feet per minute (CFM) of air required for a new nozzle to permit adjustments as the nozzle wears. Moisture and oil in the air stream gradually accumulates in the abrasive during blasting operations and will eventually cause the abrasive to clog the blaster. A water and oil separator must be used in the compressed air supply line to prevent this problem.

5.5.4.2 Portable Vacuum Abrasive Blast Equipment. Also known as vacu-blasters or dry honing machines, these devices are portable machines designed to recover the abrasive as it rebounds from the work piece.

Vacu-blasters have an abrasive hopper, a reclaimer, a dust collector, a vacuum pump, and a blast gun which contains both a blast nozzle and a vacuum duct surrounding the nozzle for recovery of the media (refer to Figure 5-6 B). This equipment is useful only on flat or slightly curved surfaces so that the rebounding media can be collected by the vacuum duct surrounding the blast nozzle. Refer to TO 35-1-3, the equipment operators manual, and systems peculiar maintenance manuals for the aircraft, missile, or equipment being repaired for further information on the authorization and use of these machines.

5.5.4.3 Wet Abrasive Blasting Equipment. Wet abrasive blasters use high pressure water as the medium for the delivery of abrasives. This method is not as harmful to the base metal as dry abrasive blasting due to the cushioning effect of the water medium. Unfortunately, this effect inhibits the speed with which corrosion products are removed, and the water can be driven into joint areas and cause corrosion itself. For these reasons, this method should not be used on aircraft or missiles. Wet abrasive blasters are useful for removing rust from steel surfaces of support equipment. The abrasive material is normally not recoverable in wet blasting operations, and only sand per A-A-59316, Types II or VI, Grades B or C; aluminum oxide per A-A-59316, Type I, Grades A or B; or glass beads per AMS 2431/6, Designation No. AGB-6 (size 13) shall be used. A corrosion inhibitor must be added to the water or a temporary protective film such as a Corrosion Preventive Compound (CPC) must be applied to the blasted surface immediately after blasting to prevent rusting of the steel surface until the part can be painted.

5.6 SURFACE FINISH.

All depressions resulting from corrosion removal shall be blended smoothly and evenly with the surrounding original surfaces. In critical and highly stressed areas, all pits remaining after removal of corrosion products, by any method, shall be blended out to prevent stress risers which may become starting points for stress corrosion cracking and/or metal fatigue. On non-critical structures, it is not necessary to blend out pits remaining after removal of corrosion products since this can result in unnecessary metal removal. Always check the system peculiar aircraft, missile, or equipment maintenance/repair manuals for maximum allowable depth of depressions due to pitting or corrosion removal. The general guidelines for shaping and blending corrosion grind-outs are shown in Figure 5-7 through Figure 5-9. For additional information on blend out procedures, refer to the system peculiar aircraft, missile, or equipment maintenance manuals and/or contact the aircraft SPD or the missile or equipment SPM.

5.7 PITTING ON CRITICAL STRUCTURE.

On critical structures having a large number of closely spaced pits, intervening material may be removed to minimize surface irregularity or waviness. The resulting depression shall have no sharp corners and shall be saucer-shaped, wherever clearance permits, with its major axis running spanwise on wings and horizontal stabilizers, longitudinally on fuselages, and vertically on vertical stabilizers (refer to Figure 5-7). In areas where a true saucer shaped depression cannot be formed due to inadequate clearance, blend out a depression as nearly as possible to that shape so that there are no abrupt or sharp edges.

5.8 CORROSION REMOVAL PROCEDURES-MECHANICAL.

5.8.1 Warnings and Cautions. The following warnings and cautions shall be observed during corrosion removal operations.

5.8.1.1 Personal Protection.

WARNING

- Many materials such as copper alloys (especially beryllium-copper, refer to Paragraph 7.20), cadmium plate, chromate conversion coatings, paints containing chromates, lead, barium, and strontium, and chemicals used for corrosion removal are toxic. Use approved respirators, eye protection, and skin protection. Take proper safety precautions to avoid inhalation or ingestion of chemical fumes or liquids and dust from corrosion products during corrosion removal. Wash hands thoroughly before eating or smoking.
- All powered mechanical corrosion removal procedures create airborne particles. Respirators and eye protection and adequate ventilation are required.
- It is essential that all blasting media and other residue be completely removed after abrasive blasting operations. The blasting media can be very slippery and can cause dangerous falls.
- Operators shall be adequately protected with complete face and head covering equipment, and provided with pure breathing air per requirements of AFOSH Standards 91-31 and 161-1 for all abrasive blasting operations .
- Wear leather gloves when using metallic wools to prevent hand injuries.

- Do not use abrasive flap brushes, wheels, discs or wire brushes above their authorized RPM rating. These tools can fly apart, causing serious injury.
- Abrasive blasting operations create extensive airborne particles which may be hazardous to the eyes, lungs, skin, etc. A hood, gloves with gauntlets, and respirator are required.
- Exercise caution when using sharp or pointed tools to prevent injury.
- Depleted uranium is extremely toxic and shall be worked only under a license from the Nuclear Regulatory Agency (NRA). Machining or other work, such as surface sanding, may be done only by the licensee. No drilling, sanding, abrasive blasting, or other mechanical work is permitted on depleted uranium by any field level (organizational or intermediate) maintenance activity. If the protective finish (plating) which covers the depleted uranium is chipped, peeled, or otherwise removed so the dark gray or black uranium oxide is visible, the part must be returned to the licensee for rework or disposal. Packaging and shipping procedures shall conform to AFI40-201 and other any other related current regulations for handling radioactive materials.

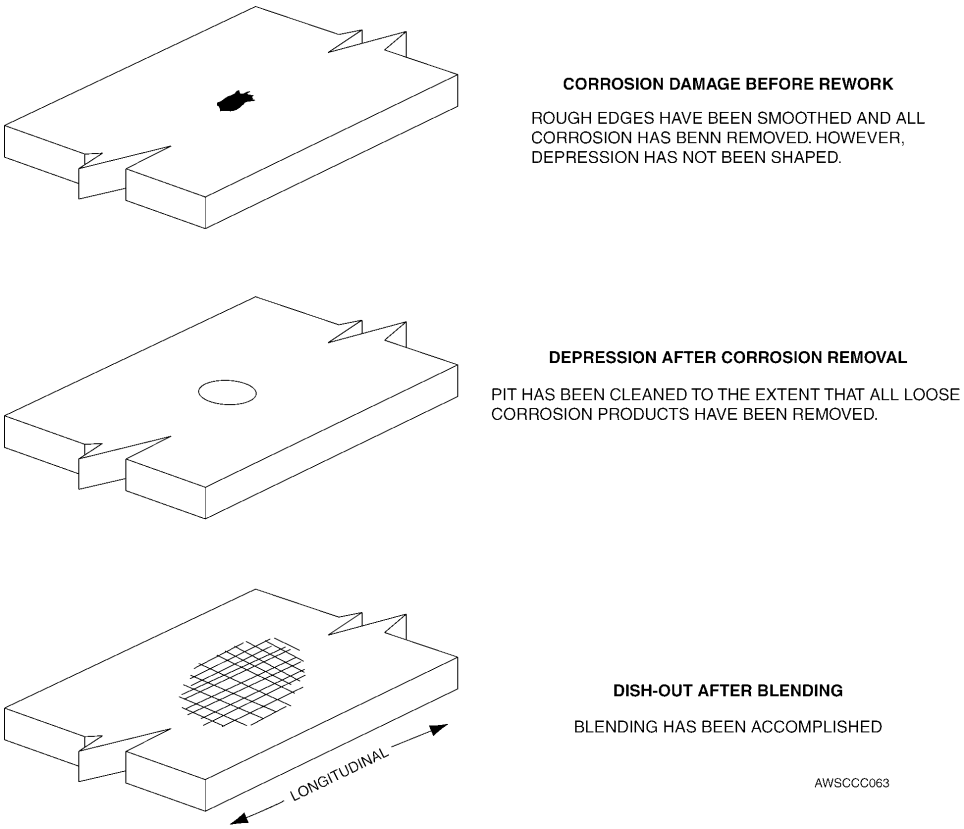

Figure 5-7. Shaping Reworked Areas

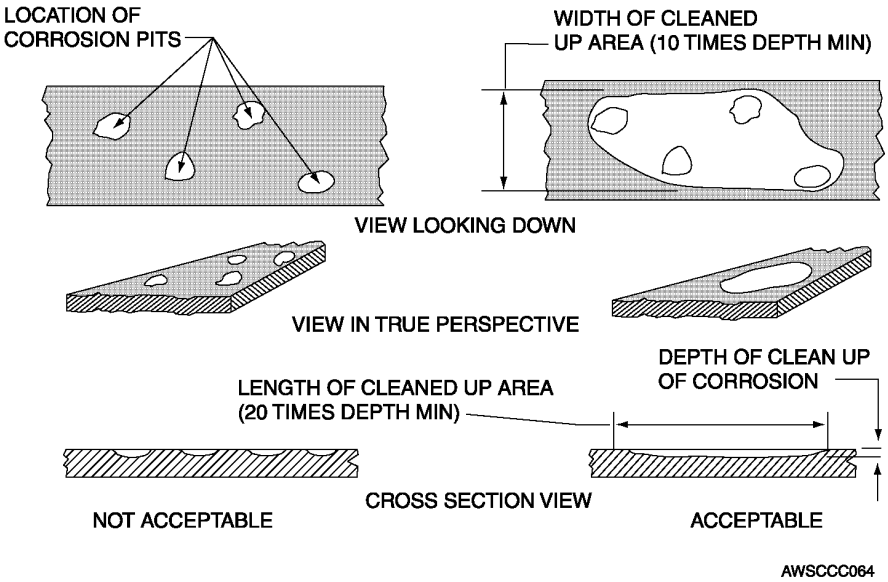

Figure 5-8. Acceptable Clean-up of Pitting Corrosion on Critical Structure

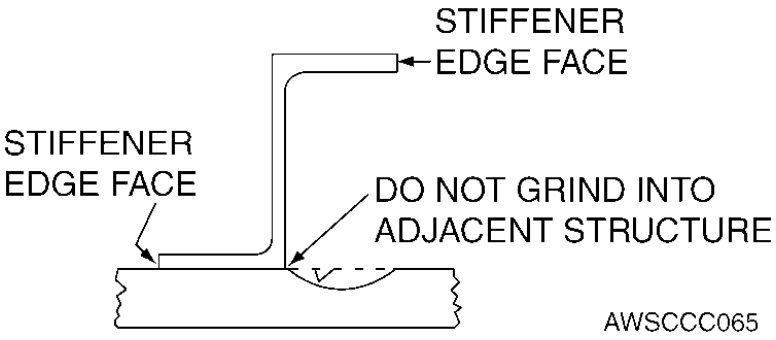

Figure 5-9. Limited Clearance

5.8.1.2 Mechanical Damage.

WARNING

- Use extreme care to ensure that blast media does not contaminate hydraulic, fuel, oil, coolant, or oxygen systems. Blockages in flight critical components caused by abrasive media particles can result in loss of life and aircraft.
- Finely divided dried particles of many materials (metallic, organic, and inorganic) can form explosive mixtures with air resulting in dust explosion hazards. Use extreme care when dry abrasive blasting magnesium and titanium alloys, and provide adequate ventilation to prevent formation of explosive dust mixtures during all abrasive blasting operations.
- Abrasive blasting operations of these surfaces shall not be subjected to severe abrasive action. Do not use rotary files to remove corrosion from installed fasteners.
- Use only non-powered abrasive paper, cloth, or mat, powered flap brushes or wheels, or abrasive blasting to remove corrosion from high steels. Other power tools can cause local overheating and/or formation of notches which can generate fatigue or stress corrosion cracking failures. Refer to TO 4S-1-182 for additional procedures/restrictions to be used on aircraft landing gear components.
- Dry abrasive blasting of titanium alloys and high strength steel crates sparking. Ensure that the abrasive blasting area is free of all flammable vapors and liquids.

CAUTION

- Do not use flap brushes down to within two inches from the center of the hub. Continued use beyond this limit may cause gouging due to loss of flexibility of the fiber. Follow direction of rotation, as indicated by arrow imprinted on side surface of the core.
- Excessive pressure on flap brushes will cause polyurethane paint to melt, gum up, and streak around the area being worked
- Protect areas adjacent to corrosion removal operations from chips, dust, and other debris which could produce dissimilar metal corrosion on previously uncorroded surfaces.
- Use only those materials recommended in Table 5-3 and Table 5-4 to prevent dissimilar metal particles from becoming embedded in surfaces and generating rapid galvanic corrosion.
- Be careful when removing corrosion from soft plated surfaces (zinc, cadmium, etc.). Soft plating is easily damaged or removed by mechanical methods.

5.8.2 Non-Powered Mechanical Corrosion Removal. This method is accomplished by abrading the corroded surface with hand held tools or abrasives to remove the corrosion. It is normally used to remove surface corrosion and other forms of mild to moderate corrosion by scraping or wearing away the corrosion products along with a minor amount of base metal. The basic steps in this procedure are.

5.8.2.1 Determine whether all the corrosion can be removed without exceeding the allowable damage limits before

starting the removal operation. If damage limits will be exceeded, repair or replace the part per directions in the applicable system peculiar aircraft, missile, or equipment maintenance manual or request disposition from the aircraft SPD or the missile or equipment SPM if repair or replacement is not covered in the manuals.

5.8.2.2 Protect adjacent components and/or areas from scale, chips, corrosion products, and chemical agents. Mask lap joints, hinges, faying surfaces, access doors, air scoops, and other openings which would allow chips, dust, or other debris to enter interior areas. Use barrier material/paper and masking tape.

a. Clean the affected area to remove grease, oil, and soils (refer to Chapter 3).

b. Using materials in Table 5-4, remove all corrosion using the mildest effective method. Determine whether corrosion has been completely removed by inspecting with a 10X magnifier (refer to Appendix B). If necessary, a more sensitive evaluation can be made by using fluorescent penetrant in conjunction with the magnifier.

c. When complete removal has been attained, blend or fair out the edges of the damaged areas using fine abrasive paper or cloth. a. e. After all corrosion has been removed, recheck to ensure that allowable damage limits have not been exceeded.

d. Treat the surface in accordance with Section II of this Chapter and apply protective coatings in accordance with TO 1-1-8 and the applicable system peculiar maintenance manual.

5.8.3 Powered Mechanical Corrosion Removal. Powered corrosion removal is generally done using pneumatic drills with flap brush, rotary file, sanding pad or abrasive wheel attachments. This method is normally used to remove heavy corrosion by wearing away the corrosion products. Part of the base metal is abraded away with the corrosion products using this procedure. The basic steps in corrosion removal are:

5.8.3.1 Determine whether all the corrosion can be removed without exceeding the allowable damage limits before starting the removal operation. If damage limits will be exceeded, repair or replace the part per directions in the applicable system peculiar aircraft, missile, or equipment maintenance manual or request disposition from the aircraft SPD or the missile or equipment SPM if repair or replacement is not covered in the manuals.

5.8.3.2 Protect adjacent components and/or areas from scale, chips, corrosion products, and chemical agents. Mask lap joints, hinges, faying surfaces, access doors, air scoops, and other openings which would allow chips, dust, or other debris to enter interior areas. Use barrier material/paper and masking tape.

a. Clean the affected area to remove grease, oil, and soils (refer to Chapter 3).

b. Using materials in Table 5-3, remove all corrosion using the mildest effective method. Determine whether corrosion has been completely removed by inspecting with a 10X magnifier (refer to Appendix B). If necessary, a more sensitive evaluation can be made by using fluorescent penetrant in conjunction with the magnifier.

c. When complete removal has been attained, blend or fair out the edges of the damaged areas using fine abrasive paper or cloth.

d. After all corrosion has been removed, recheck to ensure allowable damage limits have not been exceeded.

e. Treat the surface in accordance with Section II of this Chapter and apply protective coatings in accordance with TO 1-1-8 and the applicable system peculiar maintenance manual.

5.8.4 Abrasive Blasting Corrosion Removal. Before beginning abrasive blasting operations, ensure that all safety precautions listed in the warnings and cautions in Paragraph 3.5.1.2 and Paragraph 5.8.1.2 are fully observed. Failure to comply with these precautions may result in harm to personnel and equipment.

5.8.4.1 Abrasive Blasting Procedures. The blasting operation should be accomplished in the following steps:

a. Inspect corroded areas and surfaces and decide which ones can be abrasively blasted and what techniques will be used. Clean any oil, grease, or other soils from surfaces with MIL-PRF-87937, Type IV; MIL-PRF-85570, Type II; or an approved cleaning solvent such as A-A-59601 and/or MIL-PRF-680, Types II or III per instructions in Chapter 3 of this manual.

(1) Blasting shall not be used in areas or under conditions that would allow any escaped abrasive particles to contaminate any system, engine, or other component.

(2) Examine all corroded areas for corrosion blisters. If intergranular and/or exfoliation corrosion is present, use other recommended mechanical removal methods. Abrasive blasting will not remove these types of corrosion effectively.

(3) Blasting shall not be performed on surfaces where there is a danger of warping or distorting the base material. Sheet metal, 0.0625 inch (16 gauge, U.S. Standard) or thinner shall not be blasted. Consult the applicable system peculiar aircraft, missile, or equipment manuals to determine metal type, thickness, and allowable metal removal limits for the particular part.

b. Determine what areas need protection from the media blast stream and entrapment of the media, and mask or seal these areas. Composite surfaces and those requiring a very smooth surface finish (63 RMS or better) must be effectively protected from the media blast stream. Use form fitting metal or wood shields as required and an impact resistant tape such as 3M Co. PN 510 or YR-500.

c. Statically ground the abrasive blast equipment and the aircraft, missile, or equipment to be blasted.

d. Blast corroded areas using the pressures and materials given in Table 5-3. Do not attempt to use pressures higher than those specified, since higher air pressures tend to cause significant damage to components by rapidly removing too much surrounding metal along with the corrosion products. When cleaning non-ferrous metal alloys (i.e. aluminum, magnesium, etc.), never use media which has been used for cleaning ferrous metals. Abrasives used for cleaning ferrous metals will retain many ferrous metal particles which will contaminate any non-ferrous metal being blasted. Refer to the applicable abrasive blasting equipment operator's manual for specific operating instructions.

(1) Direct the blast stream at the surface from which corrosion is being removed to sweep across the surface at an angle of 30° to 40° from the blast nozzle to the surface. Several short passes over the corroded area with the blast nozzle are much more effective and less damaging to the surrounding metal than dwelling on an area for an extended period of time. Passes should start a few inches before and end a few inches beyond the corroded area being worked.

(2) Maintain the nozzle distance from the surface being clean wherever the best cleaning is obtained within the range of 2 inches minimum to 6 inches maximum.

(3) Continue blasting with short passes over the corroded area until a near-white metal surface is obtained. A near-white metal surface is a surface from which all mill scale, rust, oxides, any other types of corrosion products, paint, and/or any other foreign matter have been removed.

(4) On critical high strength aluminum and steel parts, it is necessary to fair out and smooth edges of pits to reduce stress concentrations that generate metal fatigue and/or stress corrosion cracking problems. The most effective manner is to rotate the blast nozzle around the outer edge of the pit, keeping the nozzle at a constant rate using several short passes over the corroded area.

e. Upon completion of blasting, inspect for the presence of corrosion in the blasted area. It may be necessary to use fluorescent penetrant inspection in conjunction with a 10X magnifier. Pay particular attention to areas where it is suspected that pitting has progressed into intergranular attack, because abrasive blasting has a tendency to close up streaks of intergranular corrosion rather than remove them if e. the operator uses an improper impingement angle. If corrosion has not been removed in a total blasting time of 60 seconds on any one specific area, other mechanical methods of removal should be utilized.

NOTE

- Refer to the individual system peculiar aircraft, missile, or equipment maintenance manuals for limits on metal removal. Do not exceed these limits without engineering approval from the aircraft SPD or the missile or equipment SPM.
- Abrasive blasting will not remove intergranular and/or exfoliation corrosion from aluminum alloys.
- Abrasive blasting shall be used on stainless steel (CRES) and nickel alloy parts only to remove severe/heavy corrosion and prior to acid pickling and/or passivation.

f. Completely clean all residue from the surface and exposed areas using either a pneumatic or an electric wet/dry vacuum cleaner. The vacuum cleaner nozzle shall be plastic or covered with masking tape to protect surfaces from mechanical damage. Clean the surface using materials and procedures in Chapter 3. Treat and protect all blasted areas as soon as possible after blasting in accordance with the procedures in Section II of this Chapter.

5.9 CORROSION REMOVAL-CHEMICAL.

The following paragraphs discuss chemical removal procedures for use on aircraft, missile, and other equipment parts/components and assemblies. Each type of metal alloy requires specific chemicals for removal of the different types of corrosion that are encountered on the metal alloy. The authorized chemical corrosion removal materials and procedures for their usage for each of the various metal alloys used on Air Force aircraft, missiles, and equipment is discussed separately for each metal alloy.

5.9.1 Aluminum Alloys. These paragraphs outline chemical corrosion removal procedures for aluminum alloy parts and assemblies of aircraft, missiles, and other equipment. Table 5-5 provides procedures for removal of specific types of corrosion.

5.9.1.1 Preparation. Before starting chemical removal of corrosion products, perform the following procedures:

a. Clean all dirt, grease, oil, and other contamination from surfaces to be worked in accordance with Chapter 3.

b. Inspect the equipment to determine which area(s) are and should be treated with a chemical corrosion removal compound. If an aircraft is being prepared for complete painting or repainting, all cleaned bare aluminum surfaces shall be treated.

CAUTION

- Protect all magnesium surfaces from contact with SAE AMS-1640 (MIL-C-38334) corrosion removal compound and treat later, as prescribed in this manual. Steel and cadmium plated parts should also be protected from this compound, but protection of all steel and cadmium plated steel fastener heads in large structures is impractical and need not be done.

- Do not allow these chemical corrosion removers to contact high strength steel. Hydrogen embrittlement may occur and cause a catastrophic failure.

c. Mask all lap joints, hinges, faying surfaces, access doors, air scoops, and other openings that would allow the corrosion removal compound to enter interior areas or crevices, or contact unprotected magnesium, steel, and cadmium plated parts. Mask with MIL-PRF-131, Class 1 water and vapor proof barrier material (plastic side toward the surface) and SAE AMS-T-23397, Type II (MIL-T-23397, Type II) masking tape. 3M Co. PN 425 tape is the most effective tape for extensive operations, such as chemical corrosion removal and surface preparation on large structures such as aircraft exteriors during depot repaint operations.

5.9.1.2 Chemical Corrosion Removal Materials for Aluminum Alloys. SAE AMS-1640 (MIL-C-38334, Type I) Corrosion Removal Compound for Aircraft Surfaces is the authorized general chemical remover for removing corrosion products from aluminum alloys, in particular on larger areas. Limited area corrosion removal can also be accomplished by using MIL-C-81706, Class 1A chemical conversion coating solution or Semco® PN Pasa-Jell 102 gel type aluminum corrosion remover in conjunction with A-A-58054, Type I, Grade B or C abrasive mats.

5.9.1.2.1 SAE AMS-1640 (MIL-C-38334, Type I) Corrosion Removing Compound for Aircraft Surfaces.

WARNING

SAE AMS-1640 (MIL-C-38334, Type I) and Semco® PN Pasa-Jell 102 are moderately toxic and MIL-DTL-81706, Class 1A is highly toxic to skin, eyes, and respiratory tract. Chemical or splash proof goggles and/or face shields, and chemical resistant rubber gloves, and aprons are required. Good general ventilation is normally adequate.

This material is a liquid concentrate material which shall be mixed with an equal volume of tap water before use; further dilution renders it ineffective. This material has a shelf life of one year from the date of manufacture; discard any of the material which has reached or exceeded its shelf life. SAE AMS-1640 (MIL-C-38334, Type I) is used as a general chemical corrosion remover to remove surface and pitting corrosion products from aluminum alloy surfaces. It is not Liquid Oxygen (LOX) compatible.

5.9.1.2.1.1 Application and Use. The procedure for application and use of SAE AMS-1640 (MIL-C-38334, Type I) materials is as follows:

a. After mixing properly, apply the solution by either flowing, mopping, sponging, brushing, wiping, or spraying with a non-atomizing sprayer onto the surface being worked. For large areas, begin the application at the lowest point and work upward while using a circular motion to apply the solution to ensure proper coverage and to disturb the oxide film on the surface.

b. Allow the solution to dwell on the surface for 11 to 12 minutes while vigorously agitating it on the surface at least every 2 minutes with a non-metallic, acid resistant, bristle brush or an A-A-58054, Type I, Grade B or C abrasive mat. Then rinse the surface thoroughly with fresh water heated to a temperature of +120° to +140° F (+49° to +60° C). The solution is much more effective if it is also heated to a temperature of +120° to +140° F (+49° to +60° C) and applied while warm. For severe pitting, removal may be aided by lightly agitating the pits by hand with a stainless steel (CRES) wire bristle brush with wire bristles having a maximum diameter between 0.005 and 0.006 inch (5-6 mils). Areas with

moderate to heavy surface or pitting corrosion may require additional applications.

c. After each solution application and rinse, examine the area being worked, aided with a 10X magnifier for pitting, to determine if all corrosion products have been removed. If not, repeat this process a maximum of three more times. If corrosion products remain after the fourth application of this chemical remover, use an appropriate mechanical method described in this Chapter to remove the remaining corrosion products.

NOTE

MIL-DTL-81706 (MIL-C-81706)/MIL-C-5541, Class 1A chemical chromate conversion coating shall be applied immediately after the final rinse when corrosion removal is the last process of a rework operation, or when the item or area will be painted.

Table 5-5. Typical Chemical Corrosion Removal Procedures For Aluminum Alloy Parts and Assemblies

Type of Corrosion	Step 1 Corrosion Removal	Step 2 Surface Treatment (When applicable)	Step 3 Final Protective Paint Finish (When applicable)
Light or heavy pitting or etching of aluminum alloys (clad)	Remove corrosion with SAE AMS-1640 (MIL-C-38334, Type I) per Paragraph 5.9.1.2.1.	MIL-DTL-81706/MIL-C-5541, Class 1A per Section II of this chapter.	See TO 1-1-8 and aircraft, missile, or equipment system peculiar maintenance manuals for paint system
Light or heavy pitting or etching of aluminum alloys (non-clad)	Remove corrosion with SAE AMS-1640 (MIL-C-38334, Type I) per Paragraph 5.9.1.2.1 followed by appropriate mechanical me- thods in this chapter if necessary.	As above	As above
Intergranular or exfoliation corrosion of aluminum alloys	Not applicable. Remove corrosion by appropriate mechanical methods in this chapter.	As above	As above
Light or heavy pitting or etching on small aluminum alloy parts which can be removed for treatment	Remove corrosion and/or oxide film by immersion in a SAE AMS-1640 (MIL-C-38334, Type I) prepared per Paragraph 5.9.1.2.1.	Immersion in MIL-DTL-81706, Class 1A solution per Section II of this chapter.	As above
Stress corrosion cracking of aluminum	Not applicable; replace/repair as required in the structural handbook	See step 1	See step 1

5.9.1.2.2 Semco® PN Pasa-Jell 102. This material is a gel type chemical corrosion remover for use on aluminum alloys in limited areas, in particular where LOX compatibility is required, to remove pitting and surface corrosion or etching/oxidation. Pasa-Jell 102 is a relatively strong acid mixture that can be detrimental to equipment or components if improperly used. Therefore, it shall be used only in small areas, and primarily where LOX compatibility is an essential requirement. Personnel must be properly trained and qualified to use this material for corrosion removal.

5.9.1.2.2.1 Application and Use.

WARNING

Do not use aluminum or any type of steel wool to apply or agitate Semco® PN Pasa-Jell 102 or fire will result.

CAUTION

Excessive use of abrasive materials and Semco® PN Pasa-Jell 102 can cause removal of protective cladding (Alclad) and/or excessive metal removal.

The procedure for application and use of Semco® PN Pasa-Jell 102 material is as follows:

a. Apply Pasa-Jell 102 with an acid brush. Agitate areas of deep pitting with an acid brush that has the bristles shortened by cutting off half their length or an A-A-58054, Type I, Grade A or B abrasive mat until corrosion products are removed. A thin, evenly dispersed film gives the best results. Keep the dwell time to the minimum necessary to effectively remove the corrosion products (5 to 12 minutes). Usually, dwell time can be controlled by closely observing the reaction of the Pasa-Jell 102 mixture with the aluminum surface to which it is applied to determine when all corrosion products have been lifted from the surface.

b. After all the corrosion products have been freed from the surface or the maximum 12 minutes dwell time is reached, whichever is first, wipe off the Pasa-Jell 102 and other residue with a clean, moist cloth followed by rinsing with a stream of fresh tap water applied with a wash bottle or continue to wipe with a clean, moist cloth, frequently rinsed in fresh tap water.

c. Inspect the area being worked to determine if all corrosion has been removed giving particular attention to pitted areas. Use a 10X magnifier to aid in examination of questionable areas. Remaining corrosion will appear as a powdery crust, slightly different in color than the uncorroded base metal. One application of Pasa-Jell 102 is usually sufficient in most cases. However, in severe cases, the preceding steps may have to be repeated.

5.9.1.2.3 MIL-DTL-81706 (MIL-C-81706), Class 1A Chemical Chromate Conversion Coating Solutions. Limited area corrosion removal from aluminum alloy surfaces while simultaneously applying a chemical chromate conversion coating can be accomplished by using a MIL-DTL-81706, Class 1A solution in conjunction with an A-A-58054, Type I, Grade C abrasive mat. This material helps to clean an area by oxidizing all organic soils on the aluminum alloy surface, while the abrasive mat acts to remove the corrosion products, and then the solution forms a chemical chromate conversion coating film on the aluminum alloy surface. If organic soils are present, they will turn green upon application of the solution. The green residue and the solution contaminated with the residue should be wiped from the surface and discarded. Mix the MIL-DTL-81706, Class 1A solution in accordance with the manufacturer's instructions and Section II of this chapter. It is recommended that the technician practice on some condemned components or parts prior to using this material on serviceable aircraft, missile, or equipment aluminum alloy parts.

5.9.1.2.3.1 Application of MIL-DTL-81706 (MIL-C-81706), Class 1A Solutions for Corrosion Removal.

WARNING

MIL-DTL-81706 (MIL-C-81706), Class 1A chemical chromate conversion coating solutions are moderately toxic to the skin, eyes, and respiratory tract. Chemical or splash proof goggles and chemical resistant rubber gloves are required. Good general ventilation is normally adequate.

CAUTION

MIL-DTL-81706 (MIL-C-81706), Class 1A solutions shall not be used on high strength steels (180 KSI or higher), due to the potential of hydrogen embrittlement. Also, they shall not be used on magnesium, titanium, or cadmium or zinc plated parts/surfaces as they will damage and/or corrode these metals.

The procedures for application of these materials for corrosion removal are the same as those cited in Section II of this chapter for the standard chemical chromate conversion coating solutions, except as follows:

a. The small area requiring corrosion removal and surface treatment can be cleaned with the chemical chromate conversion coating solution instead of cleaning, rinsing, and drying per Chapter 3 before application of the solution.

b. Thoroughly wet or flood the area being worked with the solution and keep it wet with solution until all phases of the process are completed and the final film is formed to prevent streaking and/or powdering on the surface.

c. Lightly abrade the surface while wet with the solution using a A-A-58054, Type I, Grade C abrasive mat.

d. If the solution turns green, continue to abrade the entire area until it is completely cleaned, and then wipe all dirty solution from the surface with a sponge, which should leave a bright, shiny surface. If dark spots or lines are seen in the area which indicates the presence of residual spots of moderate to severe corrosion, reapply the solution and vigorously agitate the wetted area with an abrasive mat as before. If the corrosion is not completely removed after this second application of

solution, remove the remaining corrosion using an appropriate mechanical method in this chapter. After corrosion removal is complete and the dirty solution is removed, reapply MIL-DTL-81706, Class 1A to form a MIL-C-5541, Class 1A film on the surface and allow the film to form in accordance with procedures in Section II of this chapter for application of chemical chromate conversion coatings to aluminum alloy surfaces.

5.9.1.3 Application of Organic Coatings. Reapply the organic coating system specified in the appropriate system peculiar maintenance manual and/or engineering drawing for the aircraft, missile, or piece of equipment and TO 35-1-3 for support equipment (SE) using TO 1-1-8 for application procedures. Apply a MIL-C-5541, Class 1A chemical chromate conversion coating using materials conforming to MIL-DTL-81706, Class 1A, if not already done, per Section II of this chapter; and paint within 48 hours after application of the conversion coating. Reapply the conversion coating in accordance with Section II of this chapter if more than 48 hours have elapsed since application of a conversion coating.

5.9.2 Magnesium Alloys. These paragraphs outline chemical corrosion removal procedures for the removal of corrosion from magnesium alloy parts and assemblies of aircraft, missiles, or other equipment. Table 5-6 provides procedures for the removal of specific types of corrosion. Removable parts can be treated more effectively by applying one of the electrodeposition conversion coatings, such as Type IV or VII, of SAE AMS-M-3171 (MIL-M-3171) after corrosion removal instead of the brush on Type VI coating specified for coating repair after corrosion removal from small areas discussed here.

5.9.2.1 Preparation. Before starting chemical removal of corrosion products, remove paint from the area per TO 1-1-8 and clean all grease, oil, and other contamination from surfaces to be worked in accordance with Chapter 3 if immersion, spray, or vapor blast cleaning is not practical. If practical, use one of the procedures for cleaning magnesium alloys by immersion, spray, or vapor blast included in SAE MS-M-3171 (MIL-M-3171).

5.9.2.2 Chemical Corrosion Removal Materials for Magnesium Alloys. Chromic acid pickle solution which is a mixture of A-A-55827 chromic acid in water may be used to remove surface oxidation and light corrosion from magnesium alloy surfaces. It is not adequate for removal of deep pitting, heavy corrosion, sand or other blast media residue, or the effects of blasting which will require use of one of the mechanical methods described in this chapter. If properly used, this chemical method removes much less metal causing much less reduction of sectional thickness than mechanical methods, but it shall not be used on parts containing copper or steel inserts unless they are completely masked off. Do not allow excessive amounts of anions such as chlorides, sulfates, or fluorides to build up in the solution; they tend to coat or etch the metal surface rather than removing corrosion products. Do not reuse old solutions; prepare fresh solutions for each separate removal operation.

5.9.2.2.1 Application and Use.

WARNING

- Do not allow rags, brushes, abrasive mats, or any other item soaked with A-A-55827 chromic acid or the chromic acid pickle solution prepared with it to come in contact with any organic solvent (MEK, acetone, paint thinner, A-A-59601/MIL-PRF-680 dry cleaning solvent, etc.) or fire will result.
- A-A-55827 chromic acid and the chromic acid pickle solution prepared with it are highly toxic to the skin, eyes, and respiratory tract. Chemical splash proof goggles and/or face shield, chemical resistant rubber gloves and apron are required. Good general ventilation is usually adequate. In case of eye or skin contact, flush with water immediately and report to the base medical facility.

The procedure for application and use of chrome pickle solution, a mixture of A-A-55827 chromic acid in water, is as follows:

a. Mix 24 ounces of A-A-55827 chromium trioxide in enough water to make one gallon for each gallon of solution being prepared in a container fabricated from lead lined steel (any alloy), stainless steel (any CRES alloy), or 1100 aluminum alloy. For depot level operations only, a removable part that is being treated can be completely immersed in the solution with an immersion time ranging from one to 15 minutes at an operating temperature ranging from 190° to 202° F (88° to 94° C). For hand application with the solution at room temperature, the dwell time for the solution on the surface is 15 minutes minimum to 30 minutes maximum. Steps b through d are for hand application. Steps e through g apply to both the immersion and hand application methods.

b. Mask off the surrounding areas, in particular to include all nearby operating mechanisms, joints, crevices, copper and/or steel inserts, and plated steel to keep the solution from attacking them.

c. Apply the chromic acid pickle solution carefully to the corroded area with an A-A-289 acid brush.

d. Allow the solution to remain on the surface for approximately 15 minutes for a solution at room temperature. Agitate the area with an A-A-289 acid brush having half the bristle length cut off or an A-A-58054, Type I, Grade B or C abrasive mat.

e. Thoroughly rinse the solution from the surface with plenty of fresh tap water.

f. Repeat the preceding sequence as necessary until all corrosion products have been removed and the metal is a bright metallic color.

g. Apply a SAE AMS-M-3171 (MIL-M-3171), Type VI chromic acid brush-on pretreatment coating to the area from which corrosion was removed in accordance with procedures in Section II of this chapter for application of a brush-on chromic acid pretreatment coating to magnesium alloy surfaces. If desired, parts that were treated by complete immersion may receive one of the other coatings listed in SAE AMS-M-3171 (MIL-M-3171) for depot level operations.

5.9.2.3 Application of Organic Coatings. Reapply the organic coating system specified in the appropriate system peculiar maintenance manual and/or engineering drawing for the aircraft, missile, or piece of equipment and TO 35-1-3 for support equipment (SE) using TO 1-1-8 for application procedures. Apply the paint within 48 hours after application of the pretreatment coating. Reapply the pretreatment coating in accordance with Section II of this chapter if more than 48 hours have elapsed since application of the pretreatment coating.

Table 5-6. Typical Chemical Corrosion Removal Procedures for Magnesium Alloys

Type of Corrosion	Step 1 Corrosion Removal	Step 2 Surface Treatment	Step 3 Protective Finish
Light pitting or surface oxidation/etching	Remove corrosion with chromic acid pickle solution per Paragraph 5.9.2.2	SAE AMS-M-3171 (MIL-M-3171), Type VI per Section II of this chapter	Approved paint system per Paragraph 5.9.2.3
Heavy pitting or etching	Not applicable. Remove corrosion by an appropriate mechanical method in this chapter.	As above	As above
Intergranular or exfoliation	Not applicable. Remove corrosion by an appropriate mechanical method in this chapter.	As above	As above
Light or heavy corrosion on small parts which can be removed for treatment	Remove corrosion in accordance with SAE AMS-M-3171 (MIL-M-3171)	As above	As above
Stress corrosion cracking	Not applicable. Replace or repair as required in the system peculiar structural handbook.	Not applicable	Not applicable

5.9.3 Ferrous Metal (Steel) Alloys Other Than Stainless Steels (Cres). These paragraphs outline chemical corrosion removal procedures for treating ferrous metal alloy parts and assemblies of aircraft, missiles, and other equipment. Use of chemical corrosion removers on steels is recommended only for areas where there is no danger of entrapping the chemicals in crevices and/or recesses. Table 5-7 provides procedures for the removal of specific types of corrosion.

5.9.3.1 Preparation. Before starting chemical removal of corrosion products, remove paint from the area per TO 1-1-8 and clean all heavy deposits of grease, oil, and other contaminants from the surfaces to be worked in accordance with Chapter 3.

5.9.3.2 Chemical Corrosion Removing Materials for Ferrous Metal Alloys Other Than Stainless Steels (CRES). Chemical corrosion/rust removers for steels are of two types; the MIL-C-10578 acid type and the A-A-59260 (MIL-C-14460) alkaline type.

5.9.3.2.1 MIL-C-10578 Corrosion Removing and Metal Conditioning Compound (Phosphoric Acid Base). MIL-C-10578 covers six separate types of phosphoric acid based corrosion/rust removing compounds used to remove corrosion/rust from ferrous metal surfaces. The following types are available:

5.9.3.2.1.1 Type I (Wash-Off) and II (Wipe-Off). Type I and II materials are suitable as rust removers for ferrous alloy metal parts. They may also be used as metal conditioners for ferrous and nonferrous (zinc galvanized, cadmium, brass, and relatively pure aluminum or alclad) metals prior to the primer and paint application and/or as a corrosion preventive to provide minor corrosion protection to these metals in an unpainted condition. Remove very heavy rust incrustations using an appropriate mechanical method listed in this chapter and heavy grease, oil, and other contamination per Chapter 3 as directed by Paragraph 5.9.3.1 before application of these materials. Type I is a little more efficient in removing rust and grease than Type II. Type I materials are applied by either spray, dip, flow-on, brush, rag, or sponge and are always rinsed off with water, preferably hot. Type II materials are applied by either brush, rag, or sponge and do not have to be rinsed off with water, but are wiped off with clean, damp rags followed by wiping with clean, dry rags prior to painting. Type II materials leave a light, gray-white coating/film on the surface that acts as a pretreatment for painting.

5.9.3.2.1.2 Type III (Inhibited). Type III materials are intended for corrosion/rust removal from chromium plated ferrous alloy surfaces and those bare ferrous alloy surfaces requiring very close dimensional tolerances. Remove very heavy rust incrustations by an appropriate mechanical method in this chapter, and heavy grease, oil, and contamination per Chapter 3 as directed by Paragraph 5.9.3.1 or by vapor degreasing before application of these materials. Type III materials are applied by either spray, dip, flow-on, brush or by full immersion in a tank containing the material. Parts are left in the solution tank or the solution is left on the surface of the part until the rust is dissolved or loosened sufficiently to permit easy removal, and then the residue is rinsed off the surface with fresh, tap water, preferably hot, and the part is dried. It is then ready for application of the required corrosion preventive treatment or paint system application.

5.9.3.2.1.3 Type IV (Nonfoaming). Type IV materials are very similar to Type I, except that nonfoaming detergents are included in the mixture. It is intended for use in pressurized spray systems at temperatures up to 150° F (66° C) maximum, after which it is rinsed off with fresh, tap water.

5.9.3.2.1.4 Type V (Immersion Tank). Type V materials are also very similar to Type I, except no grease removing solvents are used in these materials, so they are only suitable for use on surfaces from which all grease, oil, and contamination have been completely removed by cleaning per Chapter 3 as directed by Paragraph 5.9.3.1. It is intended for use in immersion tanks either at ambient temperatures or at temperatures up to 140° F (60° C) maximum.

5.9.3.2.1.5 Type VI (Brush, Spray, or Dip). Type VI materials are surface pretreatments and/or rust converters for application on either newly sand blasted or corroded/rusty steel surfaces by spray, brush, or dipping. All old grease, oil, and dirt must be removed as well as all loose and scaly rust before applying these materials. After application, they are allowed to dwell on the surface for a minimum of six hours to form a pretreatment coating on uncorroded ferrous alloys or to convert the rust on a corroded ferrous surface to a protective, pretreatment film. After a dwell time of six hours, the excess materials are rinsed off, the surface is allowed to air dry, and then the surface can be primed and painted or treated with a CPC.

5.9.3.2.2 Application and Use of MIL-C-10578 Corrosion Removing Compounds.

WARNING

- Phosphoric acid corrosion removal compounds are toxic to the skin, eyes, and respiratory tract. Chemical splash proof goggles and rubber gloves and aprons are required. Use only in a well ventilated area. In case of eye or skin contact, flush immediately with water and report to the Base Medical Facility.
- When mixing, always add the phosphoric acid corrosion remover to the water. Do not add the water to the acid, since this causes excessive heat to be generated.

CAUTION

- High strength steel parts, those heat-treated above Rockwell C40 (180,000 PSI) tensile strength, are subject to hydrogen embrittlement when exposed to acids, therefore, use of acid rust/corrosion removers on these parts is prohibited.
- Do not use acidic rust/corrosion removers if there is a danger of entrapping the materials in crevices or recesses, as they can cause corrosion in these areas.

5.9.3.2.2.1 Application and Use of Type I (Wash-Off). The directions for application and use of these materials are as follows:

a. Add one part of the concentrated material as received to three parts of water by volume. Use either a stainless steel, aluminum, vinyl, polyethylene, or rubber mixing container.

b. Remove heavy grease, oil, and contamination per Chapter 3 and heavy rust using an appropriate mechanical method in this chapter before applying the chemical removal compound.

c. Protect adjacent components by masking to prevent damage by scale, chips, corrosion products, or chemicals.

d. Apply the solution to the surfaces to be treated by either non-atomized spray, dip, flow-on, or brush. Allow the material to remain only long enough to wet the surface and cause etching. On rusted surfaces, allow the solution to dwell on the surface long enough to loosen the rust (2 to 10 minutes, depending on the degree of rusting) while agitating the surface with an A-A-58054, Type I, Grade C abrasive mat or a hand held stainless steel (CRES) brush.

e. Rinse the surface with fresh, tap water, preferably hot (120° - 140° F/ 49° - 60° C). Allow the surface to dry thoroughly prior to application of a rust/CPC or a required paint system.

5.9.3.2.2.2 Application and Use of Type II (Wipe-Off). The directions for application and use of these materials are as follows:

a. Add one part of the concentrated material as received to three parts of water by volume. Use the same type of mixing containers specified in Paragraph 5.9.2.2.1 , step a.

b. Remove heavy grease, oil, and contamination per Chapter 3 and heavy rust using an appropriate mechanical method in this chapter before applying the chemical removal compound.

c. Protect adjacent components by masking to prevent damage by scale, chips, corrosion products, or chemicals.

d. Apply the solution to the surfaces to be treated by either brush, rag, or sponge. Allow the compound to dwell on the surface for about 30 seconds.

e. Wipe off residue first with damp rags followed with dry rags leaving no more than a light gray-white coating film on the surface. Allow the surface to dry thoroughly prior to applying the required paint system.

5.9.3.2.2.3 Application and Use of Type III (Inhibited). The directions for application and use of these materials are as follows:

5.9.3.2.2.3.1 Follow these procedures for non-atomized spray, flow-on, and brush applied operations with Type III materials:

a. Add one part of the concentrated material as received to one part of water by volume. Use the same type of mixing containers specified in Paragraph 5.9.2.2.1, step a.

b. Remove grease, oil, and contamination per Chapter 3 and heavy rust using an appropriate mechanical method in this chapter prior to applying the chemical removal compound.

c. Protect adjacent components by masking to prevent damage by scale, chips, corrosion products, or chemicals.

d. Apply the solution to the surfaces to be treated by non-atomized spray, flow-on, or brush. Allow the conditioner to dwell on the surfaces long enough to loosen and/or dissolve the rust, and then rinse off all residue with fresh, hot, tap water (120° - 140° F/ 49° -60° C).

e. Allow the surface to thoroughly dry, and then either apply a CPC or a required paint system, or place the part directly into service, whichever is directed by the system peculiar maintenance technical data for the equipment involved.

WARNING

Heated dip tanks shall be properly ventilated, and ventilation shall be evaluated by the Bioenvironmental Engineer prior to initial use.

5.9.3.2.2.3.2 Follow these procedures for dip tank operations with Type III materials:

a. Stainless steel (CRES) tanks are preferred for use with this method. Mix the material as specified for non-atomized spray, flow-on, and brush applications, but mix it in the stainless steel (CRES) dip tank.

b. Immerse the part in the solution only long enough to loosen the rust. For heavy rust removal, the solution can be heated to 140° F (60° C) maximum.

c. Agitate the part in the solution to increase the rust removal rate. Rinse in a continuously over-flowing fresh, cold, tap water rinse tank, if available, or spray with fresh, hot, tap water (120° - 140° F/49° - 60° C). Thoroughly dry the parts and immediately apply the required paint system or CPC or place the part directly into service, whichever is directed by the system peculiar maintenance technical data for the equipment involved.

5.9.3.2.2.4 Application and Use of Type IV (Non-Foaming). The directions for application and use of these materials are as follows:

a. Add one part of the concentrated material as received to three parts of water by volume. Use the same type of mixing containers as specified in Paragraph 5.9.3.2.2.1, step a.

b. Remove all heavy grease, oil, and contamination per Chapter 3 and heavy rust using an appropriate mechanical method in this chapter prior to applying the chemical removal compound.

c. Apply the solution to the surface being treated by non-atomized, pressurized spray. To increase the rust

removal rate, the solution may be heated up to a temperature of 150° F (66° C).

d. Rinse with fresh, tap water, preferably hot (120° - 140° F/ 49° - 60° C).

e. Allow the part to thoroughly dry prior to application of a rust/CPC or a required paint system.

5.9.3.2.2.5 Application and Use of Type V (Immersion Tank). The directions for application and use of these materials are as follows:

a. Add one part of the concentrated material as received to three parts of water by volume. Use the same type of mixing containers as specified in Paragraph 5.9.3.2.2.1, step a, and pour the solution into a stainless steel (CRES) immersion tank, or mix the solution directly in the immersion tank.

b. This material contains no solvents to assist in cleaning, so all heavy grease, oil, and contamination must be thoroughly removed per Chapter 3 or immersion in an alkali bath prior to immersing a part in the corrosion removal solution. Remove heavy rust with an appropriate mechanical method in this chapter also prior to immersion of the part in the chemical removal compound.

c. Submerge the part being treated in the chemical removal compound just long enough to loosen the rust. For heavy rust removal, the solution can be heated to a temperature of 140° F (60° C).

d. After immersion, rinse all metal surfaces thoroughly with fresh, tap water, or immerse the part in an alkali solution followed by rinsing with fresh, tap water.

e. Allow the part to thoroughly dry prior to applying a CPC or a required paint system.

5.9.3.2.2.6 Application and Use of Type VI (Brush, Spray, or Dip). The directions for application and use of these materials are as follows:

a. Add one part of the concentrated material as received to three parts of water by volume. Use the same type of mixing containers specified in Paragraph 5.9.2.2.1, step a. This material is also available mixed in a pen type applicator for direct application to the surface.

b. Remove all heavy grease, oil, and contamination per Chapter 3 and heavy rust using an appropriate mechanical method in this chapter prior to applying the chemical removal compound.

c. Apply the solution to the surface being treated by brush, any sprayer that will accommodate acid solutions, dipping the part in the solution, or with the pen applicator.

d. Allow the material to dwell on the surface and react with the metal and convert the rust to a protective film for 6-24 hours for brush and spray applications. For dip applications, allow the part to remain in the solution for 1-5 hours, and then remove it from the solution, and allow the material to dwell on the part surfaces for an additional 6-24 hours.

e. After the dwell time is completed, rinse all excess/ unreacted material off all part surfaces with fresh, running, tap water for at least 30 seconds.

f. Allow the part to thoroughly dry prior to applying a CPC or a required paint system.

5.9.3.2.3 A-A-59260 (MIL-C-14460, Type I) Corrosion Removing Compound, Sodium Hydroxide Base; for Electrolytic or Immersion Application. This is a highly alkaline chemical corrosion/rust removing compound suitable for rust removal by immersion of the parts in the solution. It doesn't cause dimensional change of critical or machined surfaces, and it is safe to use on high strength steels as it will not cause hydrogen embrittlement. It can be used on small parts with or without paint, grease, or other surface coatings.

5.9.3.2.4 Application and Use of A-A-59260 (MIL-C-14460, Type I) Corrosion Removing Compounds. The directions for application and use of these materials are as follows:

CAUTION

- A-A-59260 (MIL-C-14460, Type 1) corrosion/ rust removing compound is a sodium hydroxide solution and therefore, highly alkaline. It is toxic to the skin, eyes, and respiratory tract. Chemical splash proof goggles and/or face shields and chemical resistant rubber gloves and aprons are required. Heated dip tanks shall be properly ventilated, and ventilation shall be evaluated by the Bioenvironmental Engineer prior to their initial use.
- When preparing/mixing this highly alkaline solution, never pour water onto the sodium hydroxide granules or flakes; this will generate an excessive amount of heat. Always pour the sodium hydroxide granules/flakes into the water.

a. Prepare/mix this alkaline corrosion/rust remover solution per the manufacturer's instructions printed on the container to obtain a solution concentration of five pounds of sodium hydroxide granules or flakes per gallon of water. Use either carbon steel or stainless steel (CRES) tanks to contain the solution.

b. Immerse the parts in the corrosion/rust remover solution. Rust removal time varies with the extent of the rust. At room temperature, rust removal is very slow, and a long soak time is required. This solution is most effective if the temperatures of the solution is brought up

to the point of a rolling boil which increases the rate of the corrosion/rust removal significantly.

c. Rinse the parts thoroughly in fresh, tap water (preferably hot- 120°-140° F/ 49°-60° C).

d. Dry the parts thoroughly, and immediately apply a CPC or a required paint system.

5.9.3.3 Application of Organic Coatings. Reapply the organic coating system specified in the appropriate system peculiar maintenance manual and/or engineering drawing for the aircraft, missile, or piece of equipment and TO 35-1-3 for support equipment (SE) using TO 1-1-8 for application procedures. Apply the paint system, when required within 4 hours after completion of the corrosion removal procedure to prevent surface rusting from occurring. As a minimum, a primer should be applied within this time frame.

Table 5-7. Typical Chemical Corrosion Removal Procedures for Ferrous Metals Other Than Stainless Steel (CRES)

Type of Corrosion	Corrosion Removal
Light or heavy rust on installed parts where chemical rust removal is practical	Remove very heavy corrosion by wire brushing, sanding, or other appropriate mechanical method in this chapter followed by phosphoric acid etch with MIL-C-10578, Type I, II, IV, or VI materials (refer to Paragraph 5.9.3.2.2.1, Paragraph 5.9.3.2.2.2, Paragraph 5.9.3.2.2.4, and Paragraph 5.9.3.2.2.6). Do not use phosphoric acid etch on high strength steel.
Light or heavy rust on small parts where vat treatment is practical	a. Acid Method: Remove corrosion by immersing parts in MIL-C-10578, Type III, V, or VI phosphoric acid solution (refer to Paragraph 5.9.3.2.2.3, Paragraph 5.9.3.2.2.5, and Paragraph 5.9.3.2.2.6). Do not use phosphoric acid on high strength steel. Alkaline Method (recommended for critical or mechanical surfaces): Remove corrosion by immersing parts in A-A-59260 (MIL-C-14460, Type I) alkaline solution (refer to Paragraph 5.9.3.2.4)

5.9.4 Stainless Steel (Cres) And Nickel Based Alloys. These paragraphs outline chemical corrosion removal procedures for stainless steel (CRES) and nickel based alloy parts and assemblies. Table 5-8 provides procedures for removing specific types of corrosion. Chemical corrosion removal is recommended for severely corroded areas only when there is no danger of entrapping chemicals in recesses, cavities, or joint areas or damaging surrounding metals and plating. Use these chemical procedures on installed components which are not readily removable. When internal corrosion is evident, affected components shall be removed and processed through an overhaul facility in accordance with system peculiar maintenance manuals for the specific aircraft, missile, or piece of equipment.

5.9.4.1 Preparation. If the corroded area is contaminated with grease, oil, dirt, or any other foreign material, clean the area per Chapter 3.

a. Protect adjacent unaffected areas not being treated by masking to prevent damaging them with the chemicals used.

WARNING

- A-A-59601 and MIL-PRF-680, Types II and III dry cleaning and degreasing solvents are toxic to the skin, eyes, and respiratory tract. Skin and eye protection are required. Avoid repeated or prolonged skin contact or inhalation. Good general ventilation is normally adequate.
- When using metallic wools, wear leather gloves and exercise care to prevent injury to hands and fingers.

CAUTION

- Take care to prevent solvents from splashing or running because they can damage paints and elastomers (e.g., rubbers, plastics).
- Take care to protect surrounding unaffected areas next to the area being treated by preventing leakage of chemicals into recesses or inaccessible areas in the structure which can cause additional damage from corrosion attack.

b. Remove all loose corrosion by abrading the surface with either A-A-1043, Type IV, Class 1 stainless steel wool, 240 grit ANSI B74.18 (A-A-1047) silicon carbide abrasive paper or ANSI B74.18 (A-A-1200) silicon carbide abrasive cloth, 240 grit ANSI B74.18 (A-A-1048) aluminum oxide abrasive paper or cloth, or A-A-58054, Type I, Grade C abrasive mat. Remove all loose particles by wiping the surface with a clean cloth dampened with A-A-59601 or MIL-PRF-680, Type II or III dry cleaning and degreasing solvent.

5.9.4.2 Chemical Corrosion Removing Materials for Stainless Steel (CRES) and Nickel Based Alloys. There are three types of chemicals used for corrosion removal from stainless steels (CRES) and nickel based alloys: Semco® PN Pasa-Jell 101 mineral acid, gel type material; MIL-C-10578, Type III -inhibited phosphoric acid based solution; and acid pickling solutions consisting of a mixture of A-A-59105 (O-N-350) nitric acid, MIL-A-24641 hydrofluoric acid, and water.

5.9.4.2.1 Semco® PN Pasa-Jell 101. This is a mineral acid, gel type material used for chemical corrosion removal from assembled aircraft, missile, and equipment structures in areas involving LOX storage and gaseous oxygen transfer systems and other areas where a gel type material is necessary and/or preferred.

5.9.4.2.1.1 Application and Use of Semco® PN Pasa-Jell 101.

WARNING

- Do not use aluminum or steel wool to agitate Semco® PN Pasa-Jell 101, as a combustible reaction will occur.
- Semco® PN Pasa-Jell 101 contains strong acids and is toxic to the skin, eyes, and respiratory tract. Chemical splash proof goggles and/or face shield and chemical resistant rubber gloves and aprons are required. Avoid inhaling fumes, and use only in a well ventilated area.

The directions for the application and use of this material are as follows:

a. Prepare the area per the procedures outlined in Paragraph 5.9.4.1.

b. Apply the Semco® PN Pasa-Jell 101 material to the area being worked with an A-A-289 acid brush and in accordance with the manufacturer's instructions.

c. To remove light to medium corrosion, agitate the area with an A-A-289 acid brush having half the bristle length cut off, if necessary. To remove heavy corrosion where pitting is present, agitate the area with an A-A-58054, Type I, Grade C abrasive mat until all corrosion embedded in pits and on the surface is removed. Allow the material to dwell on the surface only long enough to loosen and/or dislodge all the corrosion products.

d. Remove the Semco® PN Pasa-Jell 101 material and corrosion products from the surface with a clean, lint-free cloth frequently rinsed in fresh, tap water.

e. For a final wipe, use a clean, lint-free dry cloth. After drying, either apply a CPC or a required paint system, or place the part directly into service, whatever is directed by the system peculiar maintenance technical data for the equipment involved. Usually, stainless steel (CRES) and nickel based alloy parts do not require painting.

5.9.4.2.2 MIL-C-10578, Type III Corrosion Removing and Metal Conditioning Compound (Phosphoric Acid Base)/Inhibited. This is a phosphoric acid based material that can be used to remove corrosion from assembled aircraft, missile, and equipment structures in areas that do not contain oxygen systems and where a liquid material is acceptable.

5.9.4.2.2.1 Application and Use of MIL-C-10578, Type III. The directions for the application and use of this material are as follows:

a. Prepare the area per the procedures outlined in Paragraph 5.9.4.1.

b. Protect adjacent components by masking to prevent damage by scale, chips, corrosion products, or chemicals.

c. Add one part of the concentrated material as received to one part of water by volume. Use either a stainless steel, aluminum, vinyl, polyethylene, or rubber mixing container.

d. Apply the solution to the surfaces to be treated by non-atomized spray, flow-on, or brush. Allow the conditioner to dwell on the surfaces long enough to loosen and/or dissolve the corrosion/rust, and then rinse off all residue with fresh, hot, tap water (120° - 140° F/ 49° -60° C).

e. Allow the surface to thoroughly dry, and then either apply a CPC or a required paint system, or place the part directly into service, whatever is directed by the system peculiar maintenance technical data for the equipment involved. Usually, stainless steel (CRES) and nickel based alloy parts do not require painting.

Table 5-8. Typical Chemical Corrosion Removal Procedures for Stainless Steel (CRES) and Nickel Based Alloys

Type of Corrosion	Step 1 Corrosion Removal	Step 2 Surface Treatment	Step 3 Protective Finish
Light to heavy corrosion/rust to include pitting on installed parts where liquid chemical corrosion/rust removal is impractical because of location involving LOX storage or gaseous oxygen transfer equipment, complexity of the structure, or rinsing difficulties.	Remove very heavy corrosion/ rust first with stainless steel wool or wire brush, rotary file, or other mechanical means in this chapter followed by application of Semco® PN Pasa-Jell 101 (refer to Paragraph 5.9.4.2.1.1).	None	Normally not required (refer to Paragraph 5.9.4.3) for discussion of paint systems)
As above, when liquid chemical corrosion/rust removal is practical.	Remove very heavy corrosion/ rust as above first, followed by application of MIL-C-10578, Type III solution (refer to Paragraph 5.9.4.2.2.1).	None	As Above
Light to heavy corrosion to include pitting on parts which can be removed for processing	Remove very heavy cor rosion/ rust as above first followed by immersion in the nitric-hydrofluoric acid pickling solution (refer to Paragraph 5.9.4.2.3.1).	Passivate in accordance with SAE AMS-QQ-P-35, Type II, VI, VII, or VIII as applicable to the type of stainless steel (CRES) alloy being treated	As Above

5.9.4.2.3 Acid Pickling for Corrosion Removal (FOR DEPOT AND OTHER AUTHORIZED FACILITY USE ONLY). Acid pickling solutions consisting of a mixture of A-A-59105 (O-N-350) nitric acid, MIL-A-24641 hydrofluoric acid, and water are used to remove corrosion/rust from removed stainless steel (CRES) and nickel based alloy parts that can be immersed in the solution.

WARNING

Scale loosening, pickling, and passivating solutions are all strong acids which are toxic to the skin, eyes, and respiratory tract. Chemical splash proof goggles and/or face shield and chemical resistant rubber gloves and aprons are required. In case of eye or skin contact, flush immediately with water and report to the Base Medical Facility. Avoid inhaling fumes, and provide adequate ventilation. Solution tanks shall be properly ventilated with a lateral exhaust type ventilation system. The ventilation system and procedure shall be properly evaluated by the Bioenvironmental Engineer prior to initial use.

CAUTION

- Heat-treatable stainless steel alloys, such as AISI types 403, 410, 420, and others, are susceptible to cracking when placed in pickling solutions. Use only mechanical methods to remove corrosion from these alloys.
- When preparing pickling solutions, never pour water into the acids as excessive heat will be generated. Always pour the acids into the water.
- Rubber lined or Koroseal tanks shall be used to hold these solutions because they are so highly acidic.

a. Pickling Solution Concentration. Pickling solutions are prepared by mixing various amounts of A-A-59105 (O-N-350) nitric acid and MIL-A-24641 hydrofluoric acid in water with the correct content of the two acids for a given corrosion removal job being determined by the testing procedure outlined below. The nitric acid content may vary from 5 to 50% by volume, while the hydrofluoric acid content may vary from 0.5 to 5% by volume. A solution of 12 to 15% nitric acid by volume and 1% hydrofluoric acid by volume in water is normally used to remove light scale and/or corrosion/rust. Increase the percentage of hydrofluoric acid within the range specified above to remove heavier scale and/or corrosion/rust. As the amount of nitric acid increases with respect to the amount of hydrofluoric acid in the solution, the rate of corrosion/rust and/or scale removal decreases, because nitric acid inhibits the action of hydrofluoric acid.

b. Pickling Solution Temperature. The temperature of the pickling solution may be adjusted from ambient/room temperature up to a maximum of 140o F (60o C). Higher temperatures shall be avoided to reduce evaporation loss of hydrofluoric acid. Use temperatures below 120o F (49o C) if intergranular attack is experienced in localized areas, such as weld zones.

NOTE

AISI 300 series stainless steel (CRES) alloy tubing may be used to manufacture steam coils to heat the solution. The heating coils should be installed so that they are easily replaced, since they will be corroded by the solution over time.

c. Testing for Optimum Pickling Conditions. Optimum pickling conditions (temperature, time, and acid concentration) shall be determined by exposing test panels to various combinations of these parameters and processing them through the entire cleaning and corrosion removal/pickling cycle. Excessive etching and/or intergranular attack of the base metal indicates conditions are too aggressive, and slow removal rates indicate conditions are not aggressive enough.

(1) Make four inch square test panels from the same material from which the parts that will be treated are made. Process these test panels through the complete cleaning and corrosion removal/pickling cycle.

(2) If etching or intergranular attack is excessive (i.e., would cause the component to be condemned), or if corrosion removal is not complete, adjust the acid concentration, immersion time, and/or solution temperature until the desired result is obtained. Table 5-9 shows the effect that varying the parameters of acid concentration, immersion time, and/or solution temperature has on the corrosion removal/pickling action of the solution.

5.9.4.2.3.1 Application and Use of Acid Pickling Solutions for Corrosion Removal. The directions for the application and use of nitric acid-hydrofluoric acid solutions for corrosion removal are as follows:

a. Clean parts to be treated per procedures in Chapter 3.

b. If severe scale is present, remove it by one of the following methods:

(1) Remove scale using an appropriate mechanical method in this chapter, or

(2) Remove scale using this chemical method:

(a) Immerse parts in a solution of 8 to 10% by weight A-A-55828 (O-S-809) sulfuric acid and water at a temperature of 150° to 160° F (66° to 71° C) for about 5 minutes. If required, scrub the surface of the parts with a stainless steel (CRES) wire brush to remove any sludge formed in the area having severe scale.

(b) Repeat the above process if required, and then quickly rinse the parts thoroughly in fresh, hot, tap water at a temperature of 120° to 130° F (49° to 54° C).

c. c. Prepare the pickling solution by mixing the proper proportions of A-A-59105 (O-N-350) nitric acid and MIL-A-24641 hydrofluoric acid in fresh, tap water. As a starting point, a typical pickling solution consists of 15% nitric acid by volume and 2 to 3% hydrofluoric acid by volume in water. Make adjustments as determined by results of the testing in Paragraph 5.9.4.2.3, step c.

d. Immerse parts in the typical pickling solution at a temperature of 60° to 140° F (16° to 60° C) for a period of 5 to 15 minutes. Make adjustments to the solution temperature and immersion time as determined by the results of the testing in Paragraph 5.9.4.2.3, step c. If required, scrub the surface of the parts with a stainless steel (CRES) wire brush to loosen and remove all corrosion products.

NOTE

- Ensure that the parts are completely immersed in these solutions to prevent corrosive attack of the part at the liquid level line.
- New welds should be mechanically vibrated or agitated during the pickling operation.

e. Immediately after removing the parts from the pickling solution, thoroughly rinse the parts with fresh, hot, tap water at a temperature of 120° to 130° F (49° to 54° C).

5.9.4.3 Passivation of Stainless Steel (CRES) Alloy Parts. After corrosion removal is completed on removed stainless steel (CRES) parts, passivate the surfaces of these parts as follows:

a. Prepare a passivating solution in accordance with SAE AMS-QQ-P-35 either Type II, VI, VII, or VIII as applicable to the stainless steel (CRES) alloy of the part to be passivated.

b. Immerse the part in the passivating solution held within the temperature range and for the time interval specified in SAE AMS-QQ-P-35.

c. Remove the parts from the passivating solution, and thoroughly rinse with fresh, hot, tap water at a temperature of 120° to 130° F (49° to 54° C). As required by SAE AMS-QQ-P-35, immerse all ferritic and/or martensitic stainless steel (CRES) alloy parts in a 4 to 6% by weight solution of A-A-59123 (O-S-595) sodium dichromate in water at a temperature of 140° to 160° F (60° to 71° C) for 30 minutes.

d. Remove the parts from the sodium dichromate solution. Rinse thoroughly with fresh tap water and dry. Place the parts directly in service or in the supply system unless painting is required by system peculiar technical data.

5.9.4.4 Application of Organic Coatings. Stainless steels (CRES) and nickel based alloys are normally not painted. However, where extreme corrosive conditions are encountered, where organic finishes are required for decorative purposes, or where the stainless steel (CRES) or nickel based alloy is in contact with a dissimilar anodic metal, painting may be required. Reapply the organic coating system specified in the appropriate system peculiar maintenance manual and/or engineering drawing for the aircraft, missile, or piece of equipment and TO 35-1-3 for support equipment (SE) using TO 1-1-8 for application procedures.

5.9.5 Copper And Copper Based Alloys. These paragraphs outline chemical corrosion removal procedures for copper and copper based alloy parts and assemblies of aircraft, missiles, and equipment. Table 5-10 provides procedures for removing specific types of corrosion.

5.9.5.1 Preparation. If the corroded area is contaminated with grease, oil, dirt, or other foreign materials, clean the area per Chapter 3. Protect adjacent components and areas not being treated by masking to prevent damaging them with the chemicals used.

5.9.5.2 Chemical Corrosion Removing Materials for Copper and Copper Based Alloys. There are two types of chemical solutions used for corrosion removal from copper and copper based alloys provided there is no danger of chemical entrapment in crevices and/or recesses: MIL-C-10578, Type III Corrosion Removing and Metal Conditioning Compound (Phosphoric Acid Base)/Inhibited solution and A-A-55828 (O-S-809) Sulfuric Acid solution.

Table 5-9. Control of Corrosion Removal/ Pickling Action of Nitric-Hydrofluoric Acid Solutions

Action Is More Aggressive	Action Is Less Aggressive
1. When the nitric acid content is decreased and/or the hydrofluoric acid content is increased.	1. When the nitric acid content is increased and/or the hydrofluoric acid content is decreased.
2. When the temperature is increased.	2. When the temperature is decreased.
3. When immersion time is increased.	3. When immersion time is decreased.

5.9.5.2.1 MIL-C-10578, Type III Corrosion Removing and Metal Conditioning Compound (Phosphoric Acid Base)/Inhibited. This is a phosphoric acid based material used to remove corrosion from assembled copper and/or

copper alloy aircraft, missile, and equipment structures in areas that do not contain oxygen systems and where a liquid material is acceptable.

5.9.5.2.1.1 Application and Use of MIL-C-10578, Type III Solutions. The directions for the application and use of this material are as follows:

a. Prepare the area per the procedures outlined in Paragraph 5.9.5.1.

b. Add one part of the concentrated material as received to one part of water by volume. Use either a stainless steel, aluminum, vinyl, polyethylene, or rubber mixing container.

c. Apply the solution to the surfaces to be treated by non-atomized spray, flow-on, or brush. Allow the conditioner to dwell on the surfaces long enough to loosen and/or dissolve the corrosion and then rinse off all residue with fresh, hot, tap water (120° - 140° F/ 49° -60° C).

d. Allow the surface to thoroughly dry, and then either apply a CPC or a required paint system, or place the part directly into service, whatever is directed by the system peculiar maintenance technical data for the equipment involved.

5.9.5.2.2 A-A-55828 (O-S-809) Sulfuric Acid Solutions. Sulfuric acid solutions may be used to remove corrosion from copper and/or copper alloy components which can be disassembled and treated in immersion tanks. The tanks must be either manufactured from or lined with either stainless steel (CRES), lead, ceramic, glass, or acid resistant rubber; and they must be provided with an adequate lateral exhaust ventilation system. Part holding racks must be manufactured from either stainless steel (CRES) or Monel. The proper conditions (i.e., time, temperature, and acid concentration) for the process shall be determined by the same test procedure outlined in Paragraph 5.9.4.2.3, step c. using test panels made from the same material being treated.

5.9.5.2.2.1 Application and Use of A-A-55828 (O-S-809) Sulfuric Acid Solutions.

WARNING

Sulfuric acid solutions are toxic to the skin, eyes, and respiratory tract. Chemical, splash proof goggles and/or face shields and chemical resistant rubber gloves and aprons are required. In case of eye or skin contact, flush immediately with fresh water and report to the Base Medical Facility.

The directions for the application and use of this material are as follows:

a. Disassemble the components from which corrosion will be removed to the piece part level as necessary.

b. Prepare parts per the procedures outlined in Paragraph 5.9.5.1.

WARNING

When preparing sulfuric acid solutions, never pour water into the acid, as excessive heat will be generated. Always pour the acid into the water.

c. Prepare a 5 to 10% by volume solution of A-A-55828 (O-S-809) sulfuric acid in water and maintain the solution temperature within a range of 60° to 120° F (16° to 49° C). As required by Paragraph 5.9.5.2.2, determine the actual operating solution concentration and temperature within the ranges listed above and establish the required part immersion time by testing per Paragraph 5.9.4.2.3, step c.

CAUTION

Do not process components having assembled dissimilar metal parts or separate parts made from different metals in a sulfuric acid solution, as corrosion problems can result.

d. Immerse parts in the sulfuric acid solution prepared and maintained at the solution concentration and temperature per step c, for the immersion time established in step c.

e. Remove the parts from the acid solution, and immediately rinse them thoroughly with fresh tap water.

NOTE

Thorough rinsing is important, since any residual acid will cause staining of the metal surface.

f. If a red stain appears on the parts following the above treatment, remove the stain by immersion of the parts in a solution of 4 to 10% by volume A-A-55828 (O-S-809) sulfuric acid and 4 to 8 ounces per gallon of solution of A-A-59123 (O-S-595) sodium dichromate in water maintained within a temperature range of 60° to 120° F (16° to 49° C).

WARNING

Compressed air used for drying purposes can cause airborne particles that may enter the eyes. Eye protection is required. Air pressure shall not exceed 30 PSI.

g. Dry rapidly, preferably with hot air, to prevent water stains on the surface, and then either apply a CPC or a required paint system, or place the part directly into service, whatever is directed by the system peculiar maintenance technical data for the equipment involved.

5.9.5.3 Application of Organic Coatings. Normally copper and copper based alloys are not painted. If required, reapply the organic coating system specified in the system peculiar maintenance manual and/or engineering drawing for the aircraft, missile, or piece of equipment and TO 35-1-3 for support equipment (SE) using TO 1-1-8 for application procedures.

Table 5-10. Typical Chemical Corrosion Removal Procedures for Copper and Copper Alloys

Type of Corrosion	Step 1 Corrosion Removal	Step 2 Surface Treatment	Step 3 Protective Finish
Tarnish or colored corrosion products (patina) on installed components whenever chemical corrosion removal is practical	Remove corrosion with MIL-C-10578, Type III corrosion removing compound (phosphoric acid base)/inhibited (refer to Paragraph 5.9.5.2.1.1.)	Not required	Refer to Paragraph 5.9.5.2.1.1 for specific instructions
Corrosion on parts which can be disassembled for immersion treatment	Remove corrosion by immersion in A-A-55828 (O-S-809) sulfuric acid solution (refer to Paragraph 5.9.5.2.1.1, steps a. through e.)	If required, remove stain by immersion in A-A-55828 (O-S-809) sulfuric acid solution and A-A-59123 (O-S-595) sodium dichromate solution (refer to Paragraph 5.9.5.2.1.1, steps f. through h.)	As above

5.9.6 Titanium And Titanium Based Alloys. These paragraphs outline chemical corrosion removal procedures for titanium and titanium alloy parts and assemblies. Table 5-11 provides procedures for removing specific types of corrosion.

5.9.6.1 Preparation. If the corroded area is contaminated with grease, oil, dirt, or other foreign materials, clean the area per Chapter 3.

a. Protect adjacent unaffected areas not being treated by masking to prevent damage from scale, chips, corrosion products, or chemicals.

b. If present, remove gray or black oxides by an appropriate mechanical method in this chapter.

5.9.6.2 Chemical Corrosion Removal Materials for Titanium and Titanium Based Alloys. There are two types of chemical solutions used for corrosion removal from titanium and titanium based alloys: an acid pickling solution of A-A-59105(O-N-350), nitric acid and MIL-A-24641, hydrofluoric acid in water; and an SAE AMS-1640 (MIL-C-38334) corrosion removing compound solution.

5.9.6.2.1 Acid Pickling Solutions.

WARNING

- Nitric-acid-hydrofluoric acid pickling solutions are toxic to the skin, eyes, and respiratory tract. Chemical, splash proof goggles and/or face shields and chemical resistant rubber gloves and aprons are required. In case of eye or skin contact, flush immediately with water and report to the Base Medical Facility. Use only in a well ventilated area.
- When preparing sulfuric acid solutions, never pour water into the acid, as excessive heat will be generated. Always pour the acid into the water.

CAUTION

Titanium is susceptible to hydrogen embrittlement in acid solutions. Therefore, acid pickling shall be used only when other corrosion methods are not adequate. Competent operators must be assigned to monitor the process.

An acid pickling solution for removing corrosion from removed titanium and titanium alloy parts consists of a mixture of 20% by volume, A-A-59105 (O-N-350), nitric acid and 3% by volume, MIL-A-24641, hydrofluoric acid in water. This solution will remove most oxide coatings from titanium, provided the scale was formed at temperatures below 1000° F (538° C) by immersing them in the solution. As noted in Paragraph 5.9.6.1, step b, gray or black oxides which form at temperatures above 1000° F (538° C) should be removed by an appropriate mechanical method in this chapter, such as abrasive blasting, prior to the acid pickling to prevent pitting of the titanium.

5.9.6.2.1.1 Application and Use of Acid Pickling Solutions. The directions for the application and use of these materials are as follows:

a. Remove the components to be treated, and disassemble them to the piece part level.

b. Prepare the parts per Paragraph 5.9.6.1.

c. Immerse the parts in the nitric acid - hydrofluoric acid pickling solution specified in Paragraph 5.9.6.2.1, while maintaining the solution at room temperature. Allow the parts to remain in the solution only long enough to loosen and remove the oxide film from the surface. Intermittent scrubbing of the part surfaces with an acid brush or wiping them with a cloth during this operation will facilitate oxide film removal and minimize any pitting of the part surfaces.

NOTE

This process may be optimized by adjusting the acid concentration and immersion time as determined by testing per Paragraph 5.9.4.2.3, step c. prior to starting the pickling operation

d. Remove the parts from the solution, and immediately rinse them thoroughly in fresh, running, tap water. Either air dry them at room temperature, or dry them in a circulating air oven at a temperature of 180° to 240° F (82° to 116° C).

e. If required by system peculiar technical data, apply an organic coating system per Paragraph 5.9.6.3.

5.9.6.2.2 SAE AMS-1640 (MIL-C-38334) Corrosion Removal Compound for Aircraft Surfaces. This is the same material used to remove corrosion from aluminum alloy surfaces, and it may also be used to remove corrosion from titanium and titanium alloy assemblies and/or on equipment surfaces (refer to Paragraph 5.9.1.2.1).

5.9.6.2.2.1 Application and Use of SAE AMS-1640 (MIL-C-38334). The procedure for application and use of this corrosion removal compound to remove corrosion products/oxides from titanium and titanium alloy surfaces is the same as it is for aluminum alloy surfaces (refer to Paragraph 5.9.1.2.1.1).

5.9.6.3 Application of Organic Coatings. Titanium and titanium alloys do not normally require a paint system for corrosion protection. Where organic finishes are required for decorative purposes, for continuity with the finish system on surrounding surfaces, or to provide a barrier to prevent contact with a dissimilar anodic material, prepare the titanium or titanium alloy surface for painting by applying a thixotropic MIL-DTL-81706/MIL-C-5541, Class 1A chemical chromate conversion coating solution per Section II of this Chapter. Apply the organic finish system specified in the applicable system peculiar aircraft, missile, or equipment maintenance manual and/or engineering drawing and TO 35-1-3 for support equipment using TO 1-1-8 for application procedures.

Table 5-11. Typical Chemical Corrosion Removal of Titanium and Titanium Base Alloys

Type of Corrosion	Corrosion Removal	Protective Finish
Light to heavy oxide on parts where acid pickling is practical on removed parts	(1) Remove gray or black oxide by an appropriate mechanical method in this chapter.	When required, refer to Paragraph 5.9.6.3.

Table 5-11. Typical Chemical Corrosion Removal of Titanium and Titanium Base Alloys - Continued

Type of Corrosion	Corrosion Removal	Protective Finish
	(2) Remove remaining oxide by immersion in nitric/hydrofluoric acid solution (refer to Paragraph 5.9.6.2.1.1.	
Light to heavy oxide on assembled parts and/or on equipment surfaces	(1) As in (1) above	As above
	(2) Remove remaining oxide by treating with SAE AMS-1640 (MIL-C-38334) solution (refer to Paragraph 5.9.6.2.2.1 and Paragraph 5.9.1.2.1.1).	

5.9.7 Plated And Phosphated Surfaces. These paragraphs outline chemical corrosion removal procedures for removing corrosion from plated and phosphated surfaces. Table 5-12 provides guidelines for touch-up of corroded areas, but where an organic finish on the plated part is specified and/or required for engineering or other reasons, the table can be used as a guide for treating the entire surface of the plated or phosphated parts. Chemical corrosion removal using acid type chemical corrosion/rust removers is recommended for use where there is no danger of the chemicals becoming entrapped in crevices or recesses. They are intended for brush application following removal of heavy corrosion by an appropriate mechanical means in this chapter to remove the remaining red rust and other types of corrosion from the base metal and to condition the metal surface for better paint adhesion.

5.9.7.1 Preparation.

WARNING

Many platings and their corrosion products, such as copper, cadmium, and chromium are toxic. Take proper safety precautions to avoid inhalation or ingestion of residue created during corrosion removal operations. Wash hands thoroughly before eating, drinking or smoking after removing corrosion from plated surfaces.

If the corroded area is contaminated by grease, oil, dirt, or other foreign materials, clean the area per Chapter 3. Protect adjacent components and areas by masking to prevent damage from scale, chips, corrosion products, and the chemicals used.

5.9.7.2 Treatment of Corroded Areas on Cadmium or Zinc Plated Surfaces. Cadmium and zinc platings provide anodic protection to underlying steel/ferrous (sometimes copper) base metal. If the plating surface is broken during normal usage, the cadmium or zinc plate being anodic to the base metal will corrode preferentially and sacrificially protect the base metal. The removal of corrosion from cadmium or zinc plated surfaces shall be limited to the removal of the plating and the base metal corrosion products from the localized area of the underlying base metal.

5.9.7.2.1 Application and Use of Chemical Corrosion Removers on Cadmium and Zinc Plated Surfaces. The directions for the application and use of chemical removers on these plated surfaces are as follows:

a. Prepare the area per Paragraph 5.9.7.1.

b. As stated in Paragraph 5.9.7, remove heavy cadmium or zinc and base metal corrosion products from part surfaces using an appropriate hand type mechanical method in this chapter such as ANSI B74.18 (GGG-C-520, Type II, Class 1) 240 grit abrasive paper; ANSI B74.18 (A-A-1047) 240 grit abrasive cloth; or A-A-58054, Type I, Grade B abrasive mat. Avoid removing undamaged cadmium or zinc plating adjacent to the corroded area, and limit corrosion removal to the immediate area of the corrosion on the base metal and the plating surrounding it.

c. Remove any remaining corrosion and condition the surface of the plating and base metal with MIL-C-10578, Type I, wash-off, phosphoric acid base, corrosion removing and conditioning compound. Refer to Paragraph 5.9.3.2.2.1 for additional instructions for application and use of this material. Allow the acid to contact the surface only long enough to remove the corrosion, and then rinse the area thoroughly with fresh tap water.

d. Allow the area to dry, and immediately apply an organic coating system or CPC as directed by system peculiar technical data (refer to Paragraph 5.9.7.5).

NOTE

These procedures are intended only for field level treatment of localized corroded areas on cadmium or zinc plated surfaces and reapplication of a protective coating after corrosion removal. When the use of organic finishes or the thickness of the organic finish will impair the normal operation of a part, severely corroded parts must be removed and replaced. Where facilities are available, parts with severely corroded cadmium or zinc plating may be stripped and replated in accordance with procedures in TO 42C2-1-7. When high strength steels are being replated, use only those specialized procedures authorized for high strength steels as many plating solutions can cause hydrogen embrittlement of these materials.

5.9.7.3 Treatment of Corroded Areas on Plated Surfaces Except Cadmium or Zinc Plating. When a break occurs in the surface of either chromium, nickel, tin, or copper platings, corrosion of the steel/ferrous base metal and undercutting of the plating will rapidly follow. The corrosion will occur at a highly accelerated rate due to the galvanic action of these platings which are highly cathodic to the steel/ferrous base metals.

5.9.7.3.1 Application and Use of Chemical Corrosion Removers on Plated Surfaces Except Cadmium or Zinc Plating. Directions for the application and use of chemical removers on plated surfaces except cadmium and zinc platings are as follows:

a. Prepare the area per Paragraph 5.9.7.1.

b. Remove heavy corrosion by an appropriate hand type mechanical method in this chapter, such as a wire brush or abrasive paper, cloth, or mat.

c. Remove any remaining corrosion and condition the surface of the plating and base metal with MIL-C-10578, Type I, wash-off, phosphoric acid base, corrosion removing and conditioning compound. Refer to Paragraph 5.9.3.2.2.1 for additional instructions for application and use of this material. Allow the acid to contact the surface only long enough to remove the corrosion, and then rinse the area thoroughly with fresh tap water.

d. Allow the area to dry, and immediately apply an organic coating system or CPC or place the part directly into service, whichever is directed by system peculiar technical data (refer to Paragraph 5.9.7.5).

NOTE

These procedures are intended only for field level treatment of localized corroded areas on chromium, nickel, tin, and copper plated surfaces. Where service temperatures preclude the use of organic finishes and/or the film thickness of the organic finish will impair normal operation of the part, severely corroded parts must be removed and replaced. Where facilities are available, severely corroded parts with chromium, nickel, tin, or copper plating may be stripped and replated in accordance with procedures in TO 42C2-1-7. When high strength steels are being replated, use only those specialized procedures authorized for high strength steels as many plating solutions can cause hydrogen embrittlement of these materials.

5.9.7.4 Treatment of Corroded Areas on Phosphated Surfaces. Cadmium and zinc plated surfaces as well as many bare steel surfaces are treated with a phosphate coating at the time of manufacture to improve paint adhesion and corrosion resistance of the surfaces or as a base for the application of grease, oil, or CPC's. When phosphated surfaces corrode, corrosion should be removed by the method recommended for the base material.

5.9.7.5 Application of Organic Coatings. Organic coatings may be applied to phosphated surfaces and some plated surfaces to provide corrosion protection to the plating and/or to increase the corrosion protection the plating or phosphate coating provides to the base metal. They should not be used when the part operates at temperatures which preclude their use or when the finish will prevent the part from performing its intended function. Organic coatings shall not be used on bearing or wearing surfaces of gears, cams, slides, etc., and on surfaces requiring electrical conductivity. Apply the organic finish system specified in the applicable system peculiar aircraft, missile, or equipment maintenance manual and/or engineering drawing and TO 35-1-3 for support equipment using TO 1-1-8 for application procedures.

Table 5-12. Typical Chemical Corrosion Removal Procedures for Plated and Phosphated Surfaces

Type of Corrosion	Corrosion Removal	Protective Finish*
Light corrosion of plating and base metal under and at breaks in cadmium or zinc platings	Remove corrosion from plating and base metal with an abrasive paper, cloth, or mat. Complete corrosion removal and condition metal with MIL-C-10578, Type I, wash-off, phosphoric acid base corrosion removing and conditioning compound (refer to Paragraph 5.9.7.2.1 and Paragraph 5.9.3.2.2.1).	Refer to Paragraph 5.9.7.5 for discussion of organic coating systems.
Light corrosion of base metal under and at breaks in tin, chromium, nickel, or copper platings	Remove corrosion from the base metal using an appropriate hand mechanical method in this chapter, followed by metal conditioning with MIL-C-10578, Type I, wash-off, phosphoric acid base corrosion removing and conditioning compound (refer to Paragraph 5.9.7.3.1 and Paragraph 5.9.3.2.2.1).	As above
Heavy corrosion of base metal under and at breaks in cadmium, zinc, chromium, nickel, or copper platings	As above	As above
Light to heavy corrosion of base metal under and at breaks in phosphate coatings	Remove corrosion by method used for corrosion removal on the base metal	As above

* Protective finish should be applied only when the service temperature of the part does not preclude use of an organic coating and/or where the film thickness of the coating will not impair the operation of the part.

SECTION II SURFACE TREATMENT

5.10 PURPOSE.

Surface treatment of the metal with a prescribed chemical to form a protective film is an important step in the corrosion prevention process. Properly applied chemical treatments impart considerable corrosion resistance to the metal and greatly improve the adhesion of subsequently applied paints. Epoxy primers, for example, which do not adhere well to bare aluminum alloy surfaces, adhere very well to them when they are treated with chemical conversion coatings.

5.10.1 Chemical Prepaint Treatments. Also known as chemical conversion coatings, chromate conversion coatings, chemical films, or surface pretreatments, these treatments are aqueous acid solutions of active inorganic compounds which combine with aluminum or magnesium surfaces to form a corrosion resistant film. In addition, these films improve the adhesion of paint coatings.

5.10.1.1 MIL-DTL-81706 (MIL-C-81706) Chemical Conversion Materials for Coating Aluminum and Aluminum Alloys. MIL-DTL-81706 covers six different forms (I, II, III, IV, V, and VI) of two different classes (1A and 3) of chromate prepaint treatment materials (with various fluoride activators) with four separate application methods (A-spray, B-brush, C-immersion, and D-pen application) for treating bare and clad aluminum surfaces, including touch-up of damaged anodized aluminum, and titanium alloys. Application of these materials and the performance of the coatings developed by them are covered by MIL-C-5541. MIL-DTL-81706, Class 1A coatings provide maximum protection against corrosion when left unpainted and superior adhesion when paint systems are applied. Class 3 coatings are intended for use as a corrosion preventative film for electrical and electronic applications where low contact resistance is required. Class 1A is available in the following forms:

5.10.1.1.1 Form I (concentrated liquid).

WARNING

- Form II (powder) and Form V (premeasured thixotropic powder) contain chromic acid dust and the other forms contain liquid chromic acid all of which can cause burns of the skin, eyes, and mucous membranes, including irritation and ulcers of the nasal septum. Use chemical resistant, rubber gloves and aprons; chemical, splash proof goggles and/or face shield; and a dust filter mask when mixing the powder and handling the solutions.
- Chromic acid is a strong oxidizer and may ignite on contact with organic materials and reducing agents.

NOTE

Mix the Form I concentrated liquid, the Form II powder, and the Form V premeasured thixotropic powder in accordance with the manufacturer's instructions.

When the concentrated liquid is mixed with water, preferably deionized (DI) water, per the manufacturer's instructions, it forms a solution equivalent to a Form III solution and is ready for use in touch-up by brush, spray, and immersion (Methods A, B, and C) applications. The unused portions of the mixed solution may be stored in a container and used as required. The shelf-life of the concentrated liquid and the mixed solution is around six months if they are not contaminated.

5.10.1.1.2 Form II (powder). When the powder is mixed with water, DI water, per the manufacturer's instructions a solution equivalent to a Form III solution is formed that can be used for brush, spray, and immersion (Methods A, B, and C) applications. The powder has an indefinite shelf-life until mixed with water. The unused portions of the mixed solution may be stored in a closed container and used as required. Once mixed, the shelf-life of the solution is around six months if the solution is not contaminated.

5.10.1.1.3 Form III (premixed liquid). This material is ready for use as received for brush, spray, and immersion (Methods A, B, and C) applications. The Form III premixed liquid is the most convenient form of MIL-DTL-81706 for use at field level since it requires no mixing, but is more expensive than the Form II powder. The shelf-life of this liquid is about six months from the date of manufacture.

5.10.1.1.4 Form IV (premixed, thixotropic liquid). This material is a thickened, premixed liquid which is ready to use as received for brush (Method B) application. It is ideal for use on small areas, particularly vertical surfaces, since it will remain in place without running. It is also intended for use as a surface pre-treatment on titanium alloys prior to painting. The shelf-life of this liquid is about six months from the date of manufacture.

5.10.1.1.5 Form V (premeasured, thixotropic powder). This material is a premeasured powder that will form a thixotropic solution equivalent to Form IV when mixed with water, preferably DI water, per the manufacturer's instructions. Its use and application are the same as Form IV. The powder has an indefinite shelf-life until mixed with water. The unused portions of the mixed solution may be stored in a closed container and used as required. Once mixed, the shelf-life of the solution is about six months if the solution is not contaminated.

5.10.1.1.6 Form VI (premixed liquid in a self-contained applicator device). This material is a premixed, ready-to-use liquid contained in its own applicator device/pen for application by (pen application) (Method D). It is intended to touch-up small damaged areas of MIL-C-5541 chemical chromate conversion coatings and anodized coatings, and to apply a pre-treatment coating on corrosion grind out areas on aluminum alloys. The shelf-life of the solutions in the applicators is about six months from the date of manufacture.

5.10.1.2 AMS-M-3171 (MIL-M-3171), Type VI Magnesium Alloy, Processes for Pretreatment and Prevention of Corrosion On; Chromic Acid Brush-On Treatment.

CAUTION

The newly formed conversion coating is soft and can be easily removed. Do not disturb the coated surface until coating is completely dry. Maintain the drying temperature below 140° F (60° C) to avoid compromising integrity of the film. The minimum drying time is two hours.

Also known as the Dow #19 process, this is a corrosion preventive and prepaint surface treatment/conversion coating for application on all magnesium alloys after corrosion removal by either brush-on or immersion methods. Either obtain the premixed AMS-M-3171 (MIL-M-3171), Type VI solution through supply channels or mix the solution per these instructions:

WARNING

- AMS-M-3171 (MIL-M-3171), Type VI, contains chromic acid which can cause burns of the skin, eyes, and mucous membranes, including irritation and ulcers of the nasal septum. Use chemical resistant rubber gloves and aprons, chemical, splash proof goggles and/or face shield, and dust filter mask when mixing or handling these chemicals and/or solutions.
- Chromic acid is a strong oxidizer and may ignite on contact with organic materials such as solvents, thinners, and reducing agents.
- MIL-DTL-81706/MIL-C-5541 aluminum conversion coating is not authorized for treating magnesium alloy surfaces as it can cause corrosion of these surfaces as well as poor paint adhesion to magnesium alloys.

a. Obtain a one gallon stainless steel, aluminum, vinyl, polyethylene or rubber container.

b. Add ½ gallon of water, preferably DI water, to the container.

c. Add 1-1/3 ounces (37.8 grams) of A-A-55827 (O-C-303) Chromic Acid (CrO3) and 1 ounce (28.3 grams) of O-D-210 Anhydrous Calcium Sulfate (CaSO4.2H2O) to the water (refer to Appendix A for ordering information of chemicals).

d. Top off with enough water to make one gallon of solution and mix thoroughly until Calcium Sulfate has completely dissolved into the solution.

5.10.2 Surface Preparation. After completing corrosion removal, proceed as follows:

a. Feather the edges of the paint around areas that have been chemically or mechanically stripped for removal and treatment of corrosion prior to pretreatment/conversion coating and repainting to ensure a smooth, overlapping transition between the old and new paint surfaces. Feathering shall be accomplished using 240 or 320 grit ANSI B74.18 (A-A-1048) aluminum oxide abrasive cloth or paper; A-A-58054, Type I, Grade B or C (fine or medium) aluminum oxide abrasive mat; or a fine or very fine aluminum oxide finishing flap brush.

b. Clean the surface of the parts and/or areas being treated per procedures in Chapter 3 to remove all grease, oil, and dirt, and then rinse with fresh water. For water sensitive areas, use an approved cleaning solvent per procedures in Chapter 3.

c. Abrade the area from which corrosion was removed with an A-A-58054, Type I, Grade A or B (very fine or fine) aluminum oxide abrasive mat to remove the oxide layer/coating. This is the most effective means for cleaning the surface so that it will accept a prepaint treatment/chemical conversion coating.

NOTE

For aluminum alloy surfaces, the oxide layer may be removed from the area being treated with AMS-1640 (MIL-C-38334) corrosion removing compound per procedures in TO 1-1-8 and/or Paragraph 5.9.1.2.1. of this manual followed by rinsing with fresh water.

d. After abrading and/or deoxidizing the area, rinse the surface thoroughly by flushing with fresh water, paying particular attention to fasteners and other areas where residues may become entrapped. At this stage of the cleaning process, the surface should be water break-free (refer to Figure 5-7). A surface showing water breaks (water beading or incomplete wetting) is indicative of contamination, which will later interfere with conversion coating, sealing, and painting.

e. If the surface is not free of water breaks, repeat steps b, c, and d.

NOTE

Areas of aircraft, missiles, or equipment that have been waxed, particularly with a silicone material, or that have been treated with a silicone grease or oil require special cleaning to obtain a surface free of water breaks. When silicone wax, grease, or oil are suspected, solvent clean using an approved cleaning solvent per procedures in Chapter 3, and then perform steps b, c, and d.

5.10.3 Precautions. Observe the following precautions when applying chemical prepaint treatments on aluminum, titanium, or magnesium:

5.10.4 Application of Surface Treatments.

WARNING

- Chemical prepaint treatments are toxic to the skin, eyes, and respiratory tract. Use chemical resistant rubber gloves and aprons, and chemical, splash proof goggles and/or face shield during mixing or application. If the material (which is an acid) accidentally contacts the skin or eyes, flush immediately with plenty of fresh water, and report to the Base Medical Facility if eyes are affected or the skin is burned.
- Mixing and application should be done in an adequately ventilated area. Avoid prolonged breathing of vapors.
- Chemical conversion coating/prepaint treatment materials are strong oxidizers and are a fire hazard in contact with flammable, combustible, and readily oxidizable materials. They must be stored separately from flammable, combustible, and oxidizable materials and never mixed in containers previously containing flammable, combustible, and oxidizable products. Rags contaminated with chemical conversion coating materials should be thoroughly rinsed and disposed of as soon as it is practicable.

CAUTION

- Do not use chemical prepaint treatments on high strength steel parts. Catastrophic failure may occur due to hydrogen embrittlement.
- Do not use steel, lead, copper, or glass containers for holding/storing chemical prepaint treatments. Use only plastic, rubber, or stainless steel. Brushes with tin plated steel handles or ferrules may be used, but contact with the treatment solution should be minimized.

NOTE

Acrylic tip of TNP pen can be modified or altered to form any shape to allow touching up hard to reach areas.

Refer to Table 5-13 for recommended materials and procedures for specific alloys. Immediately after cleaning to a water break-free surface and rinsing thoroughly, apply chemical conversion coating material by brush, sponge stick moistener, immersion, or non-atomizing spray. The type of application method used depends on the type of conversion material being applied, the area to be covered, and whether application is on a removed part or on an assembly or on equipment area. The sponge stick moisteners and the Touch-N-Prep™ (TNP) pens are particularly useful for small areas. The sponge stick moisteners may be used to apply all types of conversion coatings for aluminum, magnesium, and titanium alloys; and when used, they should be rinsed with fresh water and discarded at the end of each work shift. The TNP pens are used to apply MIL-DTL-81706, Class 1A, Form VI, Method D (Alodine 1132) conversion coatings on aluminum alloys.

5.10.4.1 Conversion Coating Using TNP Pens. The repair of damaged chemical conversion coatings on aluminum alloys can be accomplished by applying Alodine 1132 using the TNP pens conforming to MIL-DTL-81706, Class 1A, Form VI, Method D. The TNP pen applicators are ideal for touching-up small surface areas such as nicked, scratched, and chipped areas in a protective coating system. The solution applied with TNP pens doesn't require rinsing or wiping off following application, thus minimizing hazardous waste generation. Empty pens can be returned to manufacturer for disposal. To use the TNP pen, remove the cap and charge the tip by pressing the tip against a flat surface for 10 to 15 seconds. The conversion coating solution will saturate the tip. Do not over-saturate the tip. Refresh solution often during use in a similar fashion.

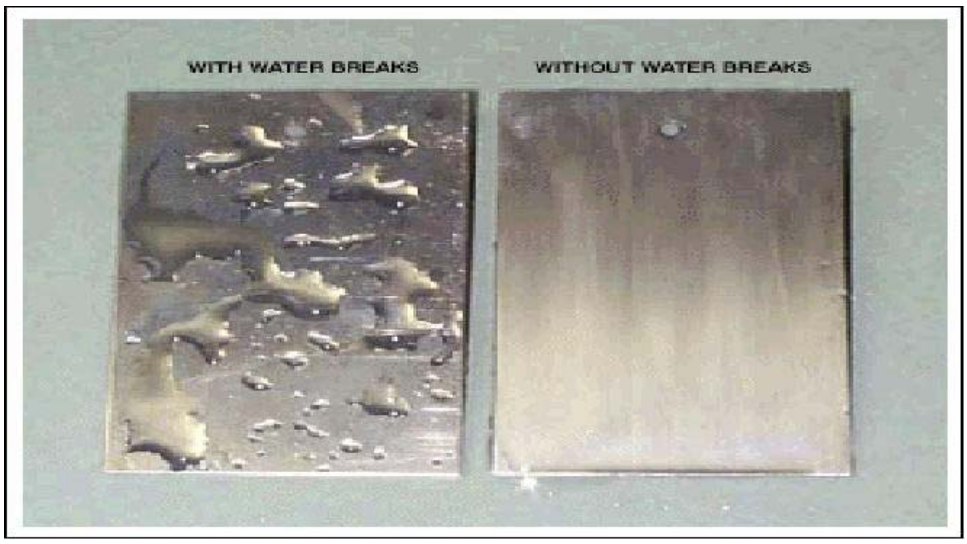

Figure 5-10. A Water-Break Free Surface Compared with One with Breaks

a. Prepare and clean the damaged area to be repaired in accordance with Paragraph 5.10.2 prior to using the TNP pen.

b. Immediately following cleaning, use the TNP pen to apply a chemical conversion coating solution in overlapping parallel strokes. Do not overapply the solution which would allow puddles, drips, or runs to form.

c. Apply one coat of solution and allow coating to dry for 5-10 minutes before next application.

d. Apply a second coat perpendicular to the first coat and allow it to dry. The treated surface does not require rinsing or wiping off, and it can be air dried at ambient temperature or force air dried with hot air. Once completely dried, the coating is ready for priming and/or painting.

e. After processing, if bare surface areas still exist, repeat steps b through d. Also, if the treated surface does not turn to an iridescent yellow color shortly following application, reclean the surface and reapply per steps a through d.

5.10.5 Notes on Conversion Coating/Surface Treatment. Prepaint treatments shall be applied immediately after corrosion removal procedures. Failure to obtain a good conversion coating may be attributed to the following:

5.10.5.1 Allowing too long a period of contact prior to rinsing can result in a powdery coated surface. Chemical conversion coating/prepaint treatments for aluminum alloys shall be rinsed immediately when the surface has an iridescent yellow to gold appearance. This usually occurs in 1 to 5 minutes. A brownish color indicates too long a dwell time and produces a powdery coating. This will not provide a good surface to which the paint/coating system can adhere. If a powdery coating is formed, remove it with an A-A-58054, Type I, Grade B abrasive mat and reapply the material. The normal dwell time for magnesium conversion coating/paint pretreatments is 1 to 3 minutes to form a brown-green film, but longer contact times for magnesium pretreatments do not usually cause problems. Titanium alloys require a dwell time of 45 minutes using a thixotropic MIL-DTL-81706, Form IV or V solution. Consult Chapter 3 of TO 1-1-8 and the material manufacturer's instructions for additional instructions for mixing and application of conversion coating solutions.

5.10.5.2 Allowing pretreatment solutions to contact lead, steel, copper, glass, or other incompatible materials can reduce the effectiveness of the solutions and may prevent adequate pretreatment.

5.10.5.3 Insufficiently cleaned metal surfaces will prevent the conversion coating from forming on the metal surface. Cleaning must provide a water break-free surface. Refer to Paragraph 5.10.2, step d.

5.10.5.4 Insufficient dwell time doesn't allow the conversion coating to form on the metal surface. As the solution approaches its shelf-life, or at temperatures below 50° F (10° C), more time may be required to form good films.

5.10.5.5 Test a solution or material that is beyond its shelf life date using a small sample of scrap of the aluminum or magnesium alloy metal that is to be treated. If a iridescent yellow to gold coating is produced within five minutes on an

aluminum alloy or a brown-green coating is formed within three minutes on a magnesium alloy at 77° F (25° C), the material may be used.

5.10.6 Post Treatment. Allow the chemical conversion coated surface to dry for a minimum of two hours before painting or applying any other temporary treatment. More time may be required at low temperatures or high humidity. The coating is soft until completely dried. Do not wipe the area with a cloth or brush when coating is still wet, since this will remove the coating. To avoid contamination of the treated surface and to provide a surface that is receptive to organic coatings, prime the treated area per procedures in TO 1-1-8 with the primer specified in the system peculiar maintenance manual for the aircraft, missile, or equipment involved within 48 hours after application of the conversion coating/prepaint treatment. If this is not possible, perform temporary preservation procedures (refer to Paragraph 5.10.7) as soon as possible. If the surface is allowed to become dirty, scratched or more than 48 hours have elapsed since its application, it must be cleaned with a wet A-A-58054, Type I, grade A or B abrasive mat and retreated before any organic coatings/paint systems or sealants are applied.

5.10.7 Temporary Preservation. Under adverse conditions or when the pressure of operations will not permit the application and curing of an organic coating/paint system, apply an appropriate CPC in accordance with Chapter 3.

Table 5-13. Prepaint Treatments for Metal Surfaces

Alloy	Surface Treatment	Procedure
Aluminum alloys	MIL-DTL-81706, Class 1A, Form I (Conc. Liquid), Form II (Powder), Form III (Pre-mixed Liquid), Method A, B, or C	Prepare a proper solution with either Form I or II materials per the manufacturer's instructions and TO 1-1-8 or use a Form III solution as received. Spray the solution with a non-atomizing sprayer (Method A) or brush the solution with a sponge stick applicator or brush (Method B) on the part or area being treated or immerse a removed part in solution (Method C). Keep the part/area wet with or the part immersed in the solution for one to five minutes, until an iridescent yellow/gold color is obtained. Immediately rinse part thoroughly. Allow to dry (usually two hours, but not to exceed 48 hours) before painting. (1)
	MIL-DTL-81706, Class 1A, Form VI, Method D; TNP Pen	Brush the surface using the acrylic tip of the pen to apply a MIL-C-81706, Form VI conversion coating per Method D (refer to Paragraph 5.9.4.1). The treated surface does not require rinsing.
Magnesium alloys	AMS-M-3171 (MIL-M-3171), Type VI (chromic acid brush-on treatment)	Obtain a premixed solution or mix a solution per instructions in Paragraph 5.10.1.2. Apply the solution to the area being treated with a sponge stick applicator or brush and keep the area wet with solution for one to three minutes until a brown-green, brassy, or brown-yellow color is obtained. Immediately rinse part thoroughly. Allow part to dry (usually eight hours) before painting. (1)
Ferrous metal (other than stainless steel)	None	Treatment prior to painting is limited to corrosion removal, cleaning and application of MIL-PRF-26915 organic zinc rich primer or MIL-C-8514 or DOD-P-15328 wash primer per instructions in TO 1-1-8. Some of the MIL-C-10578 treatments will leave a film adequate to paint over (refer to Paragraph 5.9.3.2.2)
Stainless steel and nickel alloys	None	Under engineering guidance, surfaces may be pickled (refer to Paragraph 5.9.4.2.3)
Cooper alloys	None	(2)

Table 5-13. Prepaint Treatments for Metal Surfaces - Continued

Alloy	Surface Treatment	Procedure
Titanium alloys	MIL-DTL-81706, Class 1A, Form IV (premixed thixotropic liquid) or Form V (premixed thixotropic powder)	Obtain the Form IV premixed thixotropic liquid or mix the Form V premixed thixotropic powder with water per the manufacturer's instructions and apply the solution to the surface being treated with a sponge stick applicator or a brush. Allow the solution to dwell on the surface for 45 minutes and then rinse thoroughly with fresh water. Allow to dry (usually two hours, but not to exceed 48 hours) before painting (1)
Plated and phosphated cadmium	None	(2)

(1) Drying time may be accelerated by blowing with filtered warm air (140° F/60° C maximum). If the air contains oil (from a compressor) or other impurities, the paint system which is applied over the conversion coating will not pass wet tape adhesion tests and will probably peel leading to additional corrosion. Drying air temperatures higher than 140° F (60° C) will degrade the conversion coating and cause it to lose its effectiveness.

(2) Treatment is limited to corrosion removal and cleaning. These surfaces are not normally painted, but may require painting for decorative purposes, or in instances where the surface will be in contact with a dissimilar anodic metal. (CPCs) may be applied as recommended in Chapter 3.

SECTION III SHOT PEENING/ROTO-PEENING

5.11 PEENING OF METAL SURFACES.

Peening is a special form of abrasive blasting which slightly deforms the metal surface by dimpling it and produces a compressive stress on the metal surface. It acts as a preload stress which must be exceeded by tensile loads applied to a part before the metal surface experiences any tensile stress from an applied tensile load. The deformation on the surface tends to close off exposed metal end grains and grain boundaries on the metal surface. The compressive stress on the surface increases the resistance of the metal to fatigue and stress corrosion cracking, because both begin on the surface of the metal when it is subjected to tensile stresses. The closure of exposed end grains and grain boundaries increases the resistance of the metal to intergranular corrosion; in particular, it increases the resistance of high strength aluminum alloys to exfoliation corrosion. Because it increases resistance to corrosion and fatigue, peening is specified for protection of numerous new, high strength steel and aluminum alloy parts as well as being required as a final procedure during rework/grindout of corrosion damaged areas at both field and depot levels of maintenance on many aircraft, missile, and other equipment components fabricated from these metals. Peening will not restore the strength lost in a metal structure caused by metal removal due to corrosion damage, but it increases corrosion and fatigue resistance of the remaining metal. Peening requires the use of larger sized abrasive particles than used in abrasive blasting operations, specialized blasting procedures for accomplishment, and special techniques and equipment for measuring the intensity and saturation or surface coverage of a peening operation. Peening intensity is measured with an Almen gauge and test strips, while saturation or surface coverage is determined by observation of the surface with a 10X magnifying glass.

5.11.1 Types of Peening.

WARNING

Peening operations can cause injury to personnel, as high speed airborne abrasive particles can strike unprotected areas of the body, enter into the respiratory tract, and cause slippage due to abrasive residue buildup on the floor. Personal protective equipment (PPE): protective goggles and/or a face-shield, dust filter mask, gloves, and coveralls are required for personnel engauged in peening operations. The work areas shall be kept clean of abrasive residue buildup, and adequate ventilation shall be provided.

CAUTION

- Peening is a specialized process requiring specialized training in peening techniques used. Personnel who have not been specifically trained for peening operations and/or who are not thoroughly familiar with the specifications which cover these operations AMS-S-13165 (MIL-S-13165) AMS-2431 and its subordinate slash numbers (/1 through /8), MIL-R-81841, and MIL-W-81840, shall not be allowed to perform peening operations. Damage to structure, injury to personnel, ineffective peening, and a false sense of security about the condition of peened aircraft, missile, or piece of equipment structure will result if untrained and inexperienced personnel are allowed to perform peening operations.
- Damage to equipment can also result from abrasive particles which enter working mechanisms. Masking and shielding materials shall be used to prevent penetration of abrasive particles in areas adjacent to the area being peened and to contain abrasive over-spray to prevent damage to the structure.

There are two basic types of peening used on Air Force equipment: shot peening and glass or ceramic bead peening per AMS-S-13165 (MIL-S-13165), and roto-peening per MIL-R-81841.

5.11.1.1 Shot Peening and Glass or Ceramic Bead Peening.

CAUTION

Do not use peening media (i.e. steel shot, glass beads, etc.) previously used for peening one type of metal to peen a different type of metal, as contamination of the metal surface and subsequent galvanic corrosion will result. Do not use any steel wire or shot for peening aluminum alloy surfaces, as steel particles will become embedded and cause galvanic corrosion. Use only AMS 2431/6 glass bead shot or AMS 2431/7 ceramic bead shot per parameters outlined in AMS-S-13165 for peening aluminum alloys.

Shot and glass or ceramic bead peening, per AMS-S-13165 (MIL-S-13165), is the peening of a metal surface by directing an air driven stream of abrasive particles onto the metal surface, using the same type of equipment employed for abrasive blasting to remove corrosion. The materials used are: stainless steel (CRES) cut wire shot per AMS 243¼; cast steel shot per AMS 2431/1 and /2; conditioned carbon steel cut wire shot per AMS 2431/3 and /8; ceramic bead shot per AMS 2431/7; and glass bead shot per AMS 2431/6. Consult AMS-S-13165 (MIL-S-13165) for all parameters that concern peening, such as intensity, saturation points, angle of blasting, nozzle distance, dwell times, pressures, and cast shot, cut wire shot, and glass or ceramic bead shot sizes. Shot peening by blasting will not be discussed further in this manual as this is normally a depot level operation requiring a specific step by step work procedure for each job and is not used very often in every day corrosion removal work.

5.11.1.2 Roto-Peening (Rotary Flap Peening).

CAUTION

MIL-W-81840, Type I flaps shall not be used to peen aluminum alloy surfaces, since they contain cast steel shot which can become imbedded in the surface and cause galvanic corrosion. Use only Type II flaps on aluminum alloy surfaces.

Roto-peening or rotary flap peening per MIL-R-81841 is a process that uses fiber type flaps with metal shot bonded to them and mounted in a mandrel which is rotated in a pneumatic drill motor to peen a metal surface. The flaps are held close to the metal surface while the drill motor is moved linearly along the surface so that the bonded shot strike the surface causing a peening action to occur over the entire area being worked. Rotary flap peening wheels used for roto-peening conform to MIL-W-81840 and are of two types: Type I - rigid core with semi-rigid bonded flaps to which cast steel shot conforming to AMS 243½ or SAE J827 are bonded; and Type II (Class 1, 2, or 3; defines flap size) - a flexible flap assembly mounted in a slotted mandrel with tungsten carbide shot bonded to the flap. Consult the specification covering rotary flap peening of metal parts, MIL-R-81841, for all parameters that concern roto-peening, such as intensity, saturation points, flap distance from surface, linear movement rate of flap, dwell times, drill motor speed (in RPM), and size of flap. This method of peening is convenient for peening small areas where corrosion rework has been accomplished in place on an aircraft, missile, or piece of equipment since it does not produce the contamination and abrasive residue associated with the airblast methods and doesn't require removal/disassembly of a part for placement in a blast booth. Roto-peening (rotary flap peening) is the primary peening process used on aircraft, missile, and equipment components after corrosion removal, so it is the only peening process discussed in detail in this manual. These procedures are limited in scope for use only for peening or repeening metal surfaces after corrosion removal and no other purpose. Peening that may be accomplished is limited as follows:

a. The area peened shall not be larger than 3 x 4 inches.

b. When more than one area on a component requires peening, the cumulative size of these areas shall not exceed 3 x 4 inches.

c. This procedure is not authorized for peening to accomplish fatigue or stress relief on previously unpeened areas where corrosion removal is not involved.

d. Any roto-peening operation which exceeds these parameters shall be accomplished in accordance with all requirements in MIL-R-81841 in addition to these procedures.

e. Roto-peening shall be used on a weapon system component only when required in a specific system peculiar technical order or the component is identified as having been previously peened.

5.11.2 Roto-Peening (Rotary Flap Peening) Procedures.

WARNING

Roto-peening (rotary flap peening) operations create airborne particles. Eye protection in the form of safety goggles/glasses and/or face shield is required.

5.11.2.1 Equipment. The tools required for rotary peening are: a pneumatic drill or high speed grinder; a flap wheel, conforming to MIL-W-81840; an air regulator for the drill or grinder; and a tachometer. The pneumatic drill or high speed grinder must be capable of achieving the RPM required for the type and class of peening wheel or flap being used (within ±10 RPM under load; refer to Table 5-14). The tachometer is used to check the speed (RPM) of the drill/grinder. The air regulator is used to adjust the air pressure for the control of the RPM. An Almen gauge designed specifically for the roto-peen process along with appropriate Almen test strips is used to determine peening intensity. MIL-W-81840 flap wheels are of two types: Type I wheels are for use on ferrous metal alloys (steels); and Type II, Class 1, 2, or 3 wheels (flap assemblies mounted in mandrels) are for use on aluminum and steel alloys.

5.11.2.2 Surface Preparation Procedure. Prepare the surface to be peened as follows:

5.11.2.2.1 Dimensions and Part Conditions. Areas of parts to be roto-peened shall be within required dimensional and surface finish requirements before peening. Unless otherwise directed, all heat treatments required to develop specified mechanical properties, and all machining, grinding,

and required polishing operations shall be completed before peening. Prior to roto-peening, all fillets shall be properly formed, all burrs shall be removed, and all sharp edges and corners to be peened shall be machined or sanded to provide them with a sufficient radius to result in complete coverage without any distortion.

5.11.2.2.2 Cleaning and Coating/Paint Removal. Unless otherwise specified, all areas to be roto-peened shall be cleaned in accordance with Chapter 3 of this manual, and coatings/paints shall be removed from the areas per procedures in TO 1-1-8.

Table 5-14. Tool Operation Speed Requirements

Tool (MIL-W-81840)	Tool Description	Operational Speed (RPM) Normal Range	Maximum Allowed
Type I	Rigid Core with Bonded Semi-Rigid Flaps and Cast Steel Shot Bonded to Flaps	1500 to 4000	4500
Type II, Class 1	Mandrel with 2 in L x 1 in W Flaps	1500 to 5000	6000
Type II, Class 2	Mandrel with 1¼ in L x 9/16 in W Flaps	2750 to 7000	14000
Type II, Class 3	Mandrel with 1 in L x 9/16 in W Flaps	2750 to 7000	14000

5.11.2.2.3 Masking. Any areas of the part which have critical surface finishes that must be free from peening shall be suitably masked or otherwise handled to protect them from damage caused by the rotary flap action. Masking of areas not requiring peening and whose surface finishes are not critical is optional.

5.11.2.3 Peening Intensity Determination. The peening intensity is a measure of the amount of compressive stress developed on the surface of the metal component by peening. This is measured as an arc-height value, based on the fact that a sheet of metal which is cold worked on one side only will deform due to the compressive stresses set up on the cold worked side and form a bow or arc. The arc height is determined by measuring in inches the bow created in an Almen test strip at its center by roto-peening it using the same parameters as will be used to peen the area of the component being worked. The peening intensity required after corrosion removal is that which is specified in a system peculiar maintenance technical order for the specific weapon system or it may be determined from Table 5-15. The peening intensities given in this table are for standard shot peening and were determined with an Almen test strip in accordance with AMS-S 13165 (MIL-S-13165). These intensities must be converted to roto-peen (rotary flap peening) intensities in accordance with MIL-W-81840, using the graph in Figure 5-8 which is reprinted here from MIL-W-81840.

Table 5-15. Standard Peening Intensity (I_{sp}) for Complete Coverage Arc-Height in Inches

Material Thickness (In.)	Steel: Under 20000 PSI	Steel: Over 20000 PSI	Titanium and Titanium Alloys	Aluminum and Aluminum Alloys
0.090 or less	0.003-0.0006A	0.003-0.006A	0.00.-0.006A	
0.0090 0.375	0.006-0.012A	0.006-0.010A	0.006-00.010A	0.0060-0.010A
0.375 or more	0.012-0.016A	0.006-0.010A	0.006-0.010A	0.010-0.014A

NOTE

- Base on test strip holder is specified in AMS-S-13165 (MIL-S-13165).
- The suffix letter A indicates that the values have been determined by using an A type Almen test strip. An A type Almen test strip is used for arc heights up to 0.024A. For greater intensities, Almen test strip C should be used. Almen test strip N is used if the intensity is less than 0.004A.

5.11.2.4 RPM and Peening Time Determination. The required peening intensity determined from Table 5-15 is converted in Figure 5-8 and then used in Figure 5-9 and/or Figure 5-10, as applicable, to establish peening time and RPM requirements. Figure 5-9 converts peening intensity to the RPM and peening time required to achieve this intensity

when using MIL-W-81840, Type I roto-peening wheels. Figure 5-10 accomplishes the conversion for MIL-W-81840, Type II, Class 1, 2, and 3 peening wheels (flaps). The peening times have been determined by saturating the 2.25 square inch Almen test strip at the RPM and times given in Figure 5-9 and/or Figure 5-10 to obtain the corresponding peening intensity. For areas smaller or larger than 2.25 square inches, use the following equation to determine peening time:

$T = T_s A/A_s$

T = Total peening time, in minutes.

T_s = Saturation peening time, as determined from Figure 5-9 and/or Figure 5-10, in minutes.

A = Area of part to be peened in square inches.

A_s = The 2.25 in_2 area of the test strip when a flap with a width of ¾ inch or less is used; if the flap width is greater than ¾ inch, multiply effective width of the flap by 3 inches to obtain A_s.

I_{sp} = Standard peening intensity measured with an AMS-S-13165 (MIL-S-13165) Almen strip holder. The intensity range required for saturation peening for various metal alloys at various thicknesses is specified in Table 5-15.

I_{rp} = Roto-peening intensity required for saturation peening as measured with a MIL-W-81840 Almen strip holder and determined by conversion of I_{sp} to I_{rp} using the graph in Figure 5-8.

Example: Determine the peening time and the tool speed (RPM) required to roto-peen (rotary flap peen) a 3 x 4 in area on an aluminum alloy component having a thickness within the range of 0.090 to 0.375 in using a MIL-W-81840, Type II, Class 1 flap and mandrel.

A = 3 x 4 in = 12 in^2

A_s= 1 x 3 in = 3 in^2. This is the case since a Type II, Class 1 flap is 1 in (wider than ¾ in).

I_{sp} = 0.010A (10 mils). This is the maximum allowed intensity for aluminum alloys with a thickness within the 0.090 to 0.375 in range as determined with a AMS-S-13165 (MIL-S-13165) Almen strip holder and specified in Table 5-15.

I_{rp} = 13.2 mils (0.013A). This is the required roto-peening intensity measured with a MIL-W-81940 Almen strip holder. It is determined by entering Figure 5- 8 on the horizontal (X) axis with the I_{sp} of 10 mils, moving up to the line in the graph, and reading across to the vertical (Y) axis to find an I_{rp} of 13.2 mils.

$T =_s$ 3.25 minutes. This is determined by entering Figure 5-10, the saturation curve graph for Type II wheels (flaps) of MIL-W-81840, on the vertical (Y) axis with the I_{rp} of 13.2 mils from above, moving across to the "C" curve, which is the only curve that works in this case for Class 1 flaps, and reading down to the horizontal (X) axis to find a T_s of 3.25 minutes at a flap speed of 2500 RPM.

T = (3.25) 12/3 = 13.00 min = 13 min and 0 sec at a flap speed of 2500 RPM.

5.11.2.5 Peening Process.

CAUTION

MIL-W-81840, Type I flaps shall not be used to peen aluminum alloy surfaces, since they contain cast steel shot which can become imbedded in the surface and cause galvanic corrosion. Use only Type II flaps on aluminum surfaces.

To achieve the required peening intensity, it is essential that the flap wheel be operated at the required speed under load and that the proper flap deflection be maintained throughout the peening process. Move the flap wheel over the surface being peened with longitudinal sweeps and transverse oscillation to provide uniform surface coverage, while applying sufficient hand pressure to the tool to deflect the flaps as shown in Figure 5-11. Perform this procedure over the entire surface area being peened for the time determined by the methods stated in Paragraph 5.11.2.4.

NOTE

The flaps used for this procedure are expensive and tear apart easily when they drop over the edge of a part during the peening operation. The use of a hard rubber material clamped in place at the edges of the part being peened will prevent the flaps from dropping over the edge of the part during the peening operation, thus increasing the useful life of each flap.

5.11.2.6 Peened Coverage. Visually inspect peened areas with a 10X power magnifier to determine if complete coverage and saturation have been accomplished. Every portion of the critical surface shall show visible evidence of plastic flow to demonstrate complete coverage and saturation which is indicated by the complete obliteration of the original surface finish and overlapping peening impressions.

5.11.2.7 Surface Finish. Conversion coat or passivate the peened area in accordance with Section II or other applicable paragraph of this chapter. Apply protective coatings as specified in the system peculiar maintenance manual for the aircraft, missile, or equipment involved using application procedures in TO 1-1-8

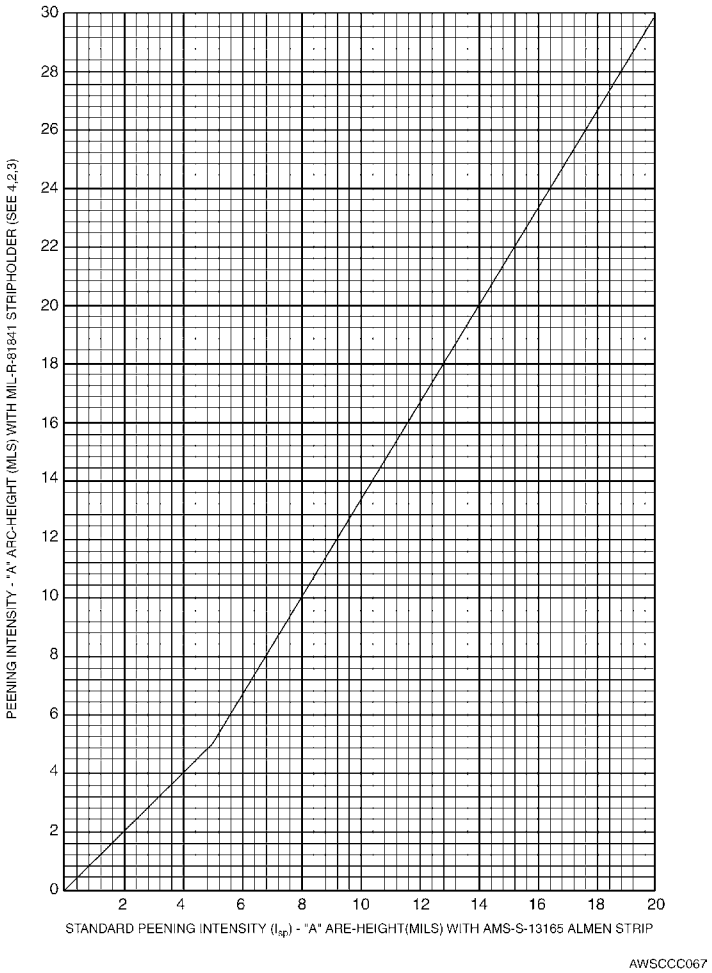

Figure 5-11. Peening Intensity Conversion Graph (I_{sp} to I_{rp})

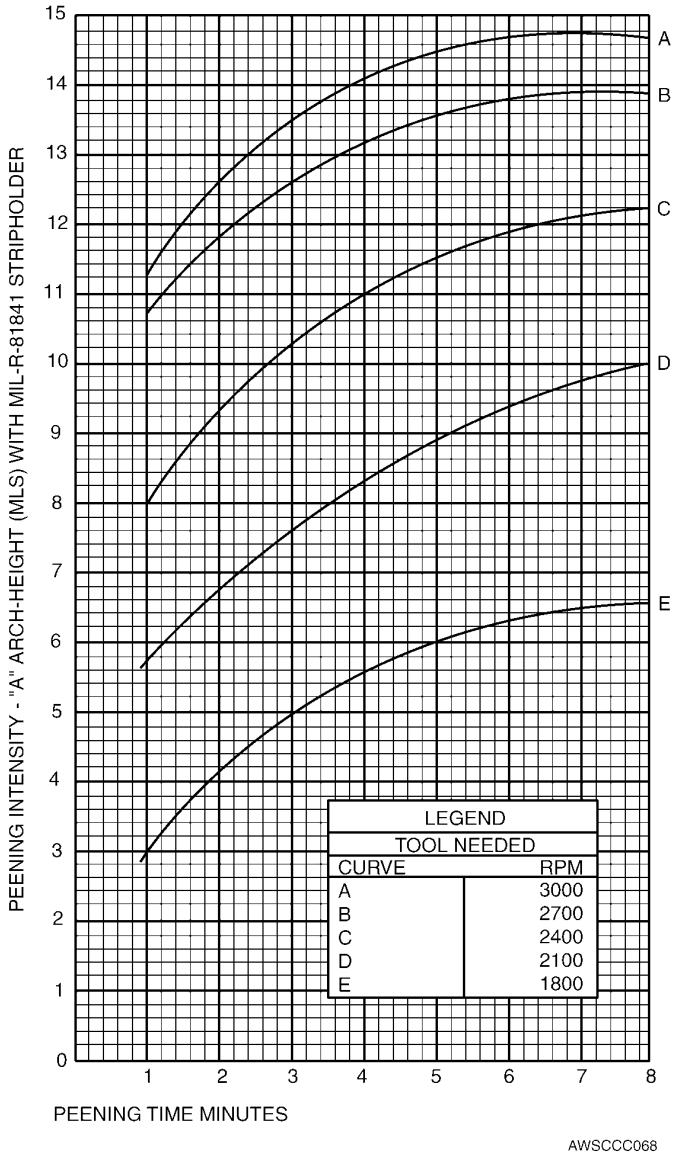

Figure 5-12. Saturation Coverage Curves for MIL-W-81840, Type I Wheels

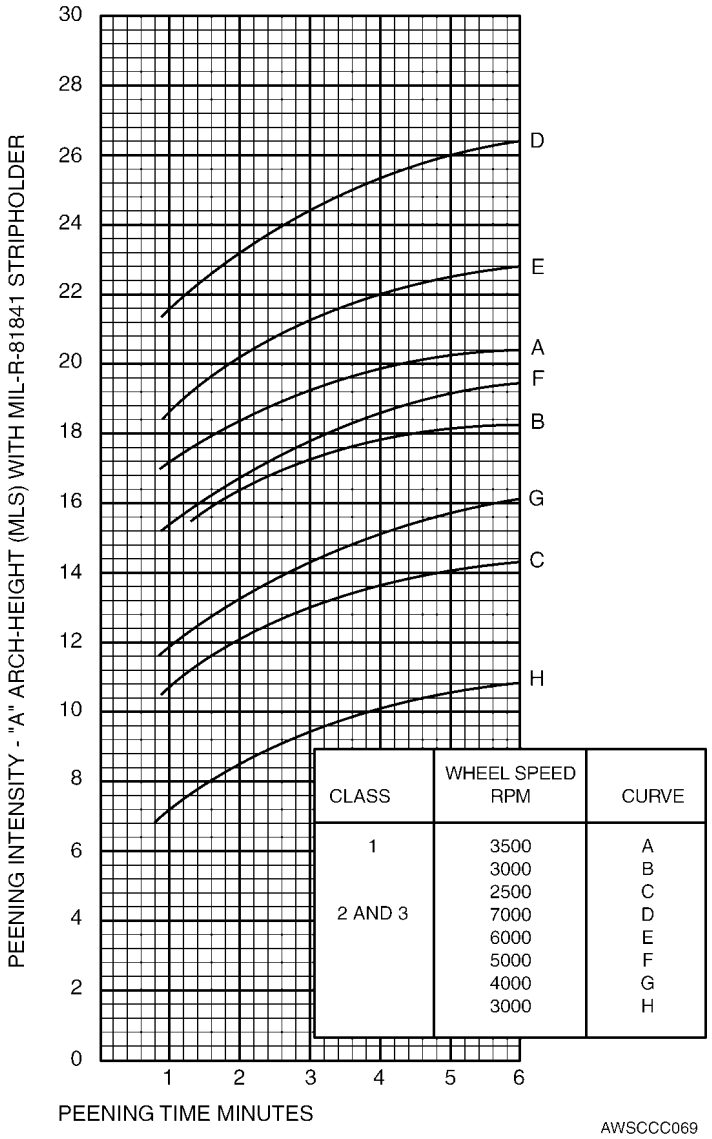

CLASS	WHEEL SPEED RPM	CURVE
1	3500	A
	3000	B
	2500	C
2 AND 3	7000	D
	6000	E
	5000	F
	4000	G
	3000	H

Figure 5-13. Saturation Coverage Curves for MIL-W-81840, Type II Wheels (Flaps)

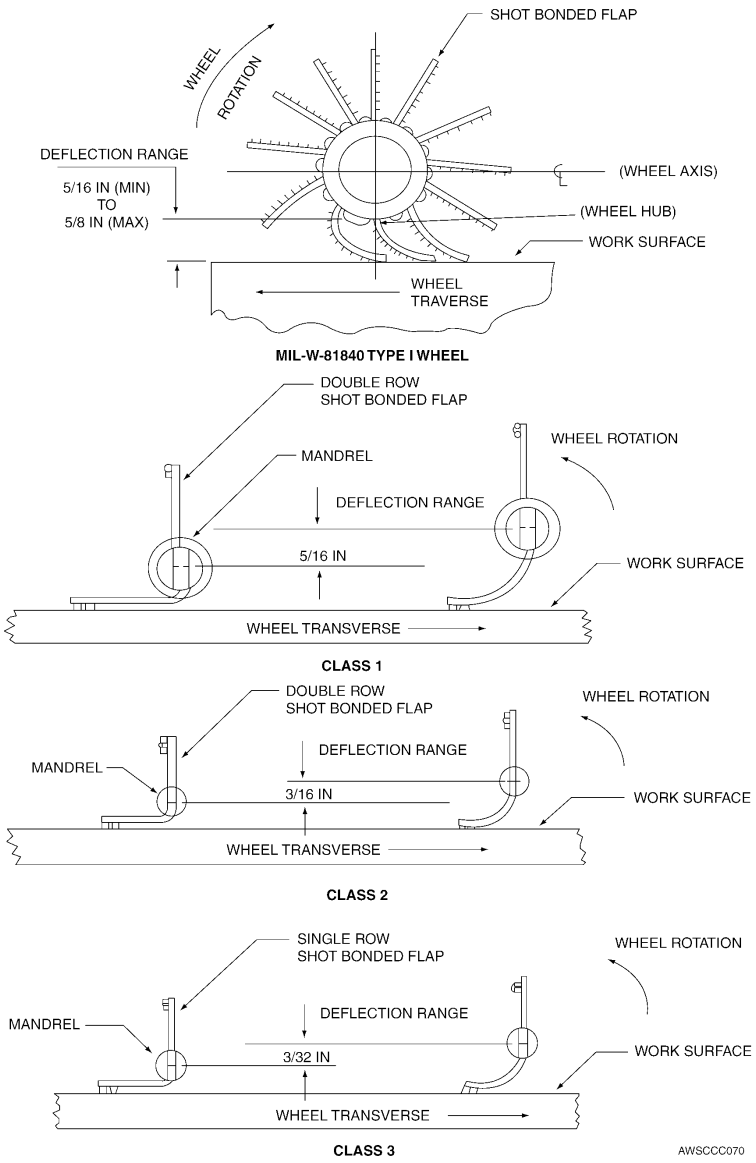

Figure 5-14. Flap Deflection Ranges

CHAPTER 6
SEALANTS

6.1 PURPOSE.

This chapter covers sealing compounds and procedures for their application to aircraft, missile, and equipment structures. When properly applied, sealants prevent the intrusion of moisture from condensation, rain, and salt water as well as dust, dirt, and aircraft fluids into joint areas where they can cause extensive corrosion. Sealants are one of the most important tools for corrosion prevention and control. To be effective, it is critical that the correct sealant be chosen for a specific area/situation and that it be applied correctly. Only qualified personnel thoroughly familiar with sealants and their application shall be permitted to handle and apply them.

6.2 APPLICATIONS.

Sealants are used for the following reasons:

a. Fuel sealing (fuel tanks and delivery components).

b. Pressure area sealing (aircraft cabin areas).

c. Weather and fluid sealing (aircraft, missile, and equipment exterior and interior skin and structural joints and surfaces).

d. Firewall sealing (engine and ordnance areas).

e. Electrical sealing (bulkhead wiring, electrical connectors, and components).

f. Acid-resistant sealing (aircraft, missile, and equipment battery compartments, and aircraft relief tubes and waste collection tanks).

g. Window sealing (aircraft and equipment windows).

h. High temperature sealing (engine areas, anti-icing ducts, and some electronics).

i. Aerodynamic sealing/smoothing (aircraft and missile exterior skin surfaces).

6.3 SEALING COMPOUNDS.

Table 6-1 lists approved sealing compounds, and their available types, properties, and intended use. Refer to the applicable aircraft, missile, or equipment system peculiar maintenance manual and Paragraph 6.7 for specific information concerning selection of the proper sealing compound and its application. Observe the warnings and cautions in Paragraph 6.6 when using any sealing compound.

6.3.1 Sealant Packaging. Sealants are generally packaged and available as three different types of packaging or units of issue (U/I):

6.3.1.1 Two-Part Kit (KT). The package consists of two separate containers, usually metal cans. One contains the catalyst (part A) and the other contains the base compound (part B), each in pre-measured amounts for mixing together.

6.3.1.2 Cartridge (CA). Cartridges come in two different types. One for single component sealants and one for two component sealants.

6.3.1.2.1 Single component sealants are contained in a plastic cartridge or tube in a ready to use condition requiring no mixing. If some of a single component sealant remains after a job, it can be stored and used at a future time as long as the cartridge/tube is tightly capped at the nozzle opening to prevent contact with air.

6.3.1.2.2 Two component sealants are packaged in Semkits® which are complete plastic cartridge assemblies that store both sealant components (each in separate chambers). Mixing of sealant materials is accomplished within the assembly, which is then used for application. Semkits® are convenient because they eliminate the need to measure and handle the materials for mixing, and generate less waste as they contain small quantities for small area applications.

6.3.1.3 Premixed and Frozen (PMF). Two component sealants can be premeasured, mixed, and frozen at temperatures of -40° F (-40° C) and stored at temperatures of -20° F (-29° C) or lower with the unit of issue being in ounces. The PMF material in plastic tubes is a convenient package configuration for low and intermittent usage applications, particularly in depot level operations. Simply thaw the material and use.

6.3.2 Polysulfide, Polyurethane, and Polythioether Sealing Compounds. All these materials are two component with the Part B base containing the prepolymer and the Part A catalyst containing the curing agent packaged in separate containers supplied together as a kit. When thoroughly mixed, the catalyst cures the prepolymer to a rubbery solid. Rates of cure depend on the type of prepolymer and catalyst, as well as the temperature and humidity. Full cure of

these materials may require as long as 7 days. Refer to Table 6-1 for a general description of these materials.

6.3.3 Silicone Sealing Compounds.

CAUTION

Room Temperature Vulcanizing (RTV) silicones conforming to MIL-A-46106 produce acetic acid (vinegar smell) which is corrosive. Therefore, as a rule of thumb, if the RTV silicone material smells like vinegar, don't use it.

These materials are generally one component materials which cure by reacting with moisture in the air. If silicones are applied too thick or in such a way that moisture is prevented from entering the material, they may not cure at all. In addition, many unauthorized silicone sealing compounds produce acetic acid, indicated by a vinegar smell, while curing which can lead to severe corrosion problems. There are two silicone sealant specifications, MIL-A-46146 and MIL-A-46106. Only MIL-A-46146 materials are non-corrosive. MIL-A-46106 materials give off acetic acid while curing and shall not be used on Air Force equipment.

Table 6-1. Sealing Compounds

Specification	Types Available	Properties	Intended Use
MIL-PRF-81733 (supersedes MIL-S-81733), Sealing and Coating Compound, Corrosion Inhibitive Class 1 - Polysulfide Class 2 - Polythioether Grade A - Chromate Inhibitors Grade B - Non-Chromate Inhibitors	Type I (thin) - for brush or dip application Type II (thick) - for sealant gun or spatula application Type III (sprayable) - for spray gun application Type IV (spreadable) - for faying surface sealing requiring extended assembly times	Two components Room temp cure Service temp: -65° to +250° F (-54° to + 121° C) Peel strength: 15 inlb width (min) Corrosion inhibiting Resists fuel, oil, and hydraulic fluid.	Sealing faying surfaces and for wet installation of fasteners on permanent structure repairs. Class 1, Grade A materials are the preferred sealants for these applications as they provide the best corrosion protection.
SAE AMS-S-8802 (supersedes MIL-S-8802), Sealing Compound, Temperature Resistant, Integral Fuel Tanks and Fuel Cell Cavities, High Adhesion (Polysulfide)	Class A (thin) - for brush application Class B (thick) - for sealant gun or spatula Class C (spreadable) - for use where extended assembly times are required	Two components Room temp cure Service temp: -65° to +250° F (-54° to + 121° C) Peel strength: 20 inlb width (min) No corrosion inhibitors Resists fuel, oil, and hydraulic fluid.	Used for fillet and brush sealing integral fuel tanks and fuel cell cavities. Not to be exposed to fuel or overcoated until tack-free.

Table 6-1. Sealing Compounds - Continued

Specification	Types Available	Properties	Intended Use
SAE AMS 3276 (supersedes MIL-S-83430), Sealing Compound, Integral Fuel Tanks and General Purpose (Polysulfide).	Class A (thin) - for brush application Class B (thick) - for sealant gun or spatula application Class C (thick) - for use where extended assembly times are required Class D (thick) - for hole and void filling Class E (thick) - for automatic riveting equipment application	Two components Room temp cure Service temp -65° to +250° F (-54° to + 121° C) sustained, intermittent (about 6 hours max.) exposure to 360° F (182° C) Peel strength: 20 inlb width (min) No corrosion inhibitors Resists fuel, oil, and hydraulic fluid;	For higher temperature applications. Used for fuel tank sealing, cabin pressure sealing, hole and void filling, and aerodynamic smoothing; for faying surface sealing, wet-installation of fasteners, overcoating fasteners, and sealing joints and seams in fuel wet areas; and for non-structural adhesive bonding. Treat bond surfaces with SAE AMS 3100 adhesion promoter to enhance sealant adhesion.
PR-1773 (supersedes PR-1403G), Sealing Compound, Non-Chromate Corrosion Inhibitive Polysulfide Rubber Cage Code #83574	Class B (thick) - for sealant gun or spatula application	Two components Room temp cure Service temp: -65° to 250° F (-54° to +121° C) Peel strength: 2 inlb width (max) Corrosion inhibitors Resists fuel, oil, and hydraulic fluid.	Preferred sealant for general purpose, low adhesion sealing of access doors, floor panels and plates, removable panels, and formed in place (FIP) gaskets in non-fuel areas. Can be used to repair defects in FIP Gaskets.
SAE AMS 3267 /1, /2, /3, and /4 (supersedes MIL-S-8784), Sealing Compound, Low Adhesion, Corrosion Inhibiting, For Removable Panels and Fuel Tank Inspection Plates /1= Class A-½ /2= Class B-½ /3= Class A-2 /4= Class B-2	Class A (thin) - for brush application Class B (thick) - for sealant gun or spatula application	Two components Room temp cure Service temp: -65° to 250° F (-54° to +121° C) Peel strength: 4 inlb width (max) Corrosion Inhibitors Resists fuel, oil, and hydraulic fluid.	Polysulfide rubber sealing compound for fillet and fay surface sealing of removable structures such as access doors, floor panels and plates, removable panels, and fuel tank inspection plates. Not for high temp areas or permanent structures.

Table 6-1. Sealing Compounds - Continued

Specification	Types Available	Properties	Intended Use
SAE AMS 3374 /1, /2, /3, and /4 (supersedes MIL-S-38249), Sealing Compound, Aircraft Firewall	Type 1 (one-part high temp. silicone)(condensation cured	One component, Type 1; Two components, Types 2, 3, and 4	Sealing firewall structures exposed to very high temperatures against the passage of air and vapors. Cures on exposure to air.
/1= Type 1	Type 2 (two-part high temp. silicone) - addition cured	Room temp cure	
/2= Type 2	Type 3 (two-part high temp. silicone) - condensation cured	Service temp; -65° to +400° F (-54° to + 204° C) withstands flash temperature of 2000° F (1093° C)	
/3= Type 3	Type 4 (two-part polysulfide)	Peel strength: 10 inlb width (min)	
/4= Type 4		No corrosion inhibitors	
		Resists fuel, oil, and hydraulic fluid	
MIL-S-85420, Sealing Compounds, Quick Repair, Low Temperature Curing Polysul-fide, for Aircraft Structures	Class A (thin) - for brush application	Two components	Quick repair sealing of aircraft structures at low temperatures. Use only with the recommended adhesion promoter/primer for optimum results. When cured at a temperature of at least 75° F (24° C), the fly-away time is 2 to 3 hours. When cured at a temperature as low as 45° F (7° C), the fly-away time is 4 hours for Type II sealants and 8 hours for Type I sealants. This sealant should be stored at a temperature not to exceed +80 (F or poor adhesion will result.
Type I - dichromate cure system	Class B (thick) - for sealant gun or spatula application	Low temp cure	
Type II - manganese cure system		Service Temp: -65° to 200° F (-54° to + 93° C)	
		Peel strength: 10 inlb width (min)	
		No corrosion inhibitors;	
		Resists fuel, oil, and hydraulic fluid.	

Table 6-1. Sealing Compounds - Continued

Specification	Types Available	Properties	Intended Use
MIL-S-29574 (SAE AMS-S-29574), Sealing Compound, Polythioether, for Aircraft Structures, Fuel and High Temperature Resistant, Fast Curing at Ambient and Low Temperatures	Class A (thin) - for brush application	Two component	Multi-purpose aircraft structure and integral fuel tank sealants with rapid ambient and low temperature curing capabilities. Use of manufacturer's recommended primer is required prior to applying this sealant for proper adhesion. Type I can be used as an alternate for SAE AMS-S-8802 (MIL-S-8802) in fuel tank applications and Type II can be used as an alternate for MIL-S-81733.
Type I (No corrosion inhibitors intermittent use to +400° F (204° C) Grade A (general use, fuel tanks and aircraft structures Grade A1 (ambient or immediate heat cure after application at temps up to 350° F (175° C) Classes B & C only Grade B (enhanced craze resistance for aircraft acrylic transparencies	Class B (thick) - for sealant gun or spatula	Low (down to +20° F/ -7° C) and ambient temp curing; Type I, Grade A1 only - can be heat cured at temps. up to +350° F (+175° C)	
Type II (Corrosion inhibitive intermittent use to 360° F (182° C)	Class C (semi-thick) -extended assembly times for faying surface sealing	Service temp: -80° to +300° F (-68° to +150° C) with intermittent use to +400° (+204° C) for Type I and +360° F (+182° C) for Type II Peel strength: 20 inlb width (min) Corrosion inhibiting - Type II only Type I has no corrosion inhibitors Resists fuel, oil, and hydraulic fluid.	

Table 6-1. Sealing Compounds - Continued

Specification	Types Available	Properties	Intended Use
MIL-A-46146, Adhesive - Sealants, Silicone, Room Temperature Vulcanizing (RTV), Noncorrosive (For Use With Sensitive Metals and Equipment)	Group I - General purpose	One component	Convenient one component, non-corrosive, RTV silicone sealant for use with sensitive metals and equipment. Not to be used where resistance to fuels, oils, or hydraulic fluids is required. Check manufacturer's instructions for primer requirements on the metal substrate being sealed, and apply the specified primer before applying the sealant.
	Group II - High strength Group III - High temperature Each group has two types.	Room temp cure Service temp -70° to +400° F (-57° to +204° C) for Groups I & II, and -70° to +600° F (-57° to +316° C) for Group III	
	Type I - Thixotropic paste inlbs	Peel strength: Group I, Type I: 15 inlbs width (min) Type II: 4 inlbs width (min) Groups II & III (both types): 40 inlbs width (min)	
	Type II - Self-leveling liquid	No corrosion inhibitors Long shelf life Short cure time.	
SAE AMS 3255, Sealing Tape, Polytetrafluoroethylene, Expanded (EPTFE) Oil and Water Resistant; (Skyflex(®)	Class 1: Continuous Ribbed, includes: Skyflex® PN's:	Preformed gasket tape with no adhesive on either side except as noted in "Intended Use" column;	Sealing of faying surfaces, access/removable panels, floorboards, and windscreens. Not for fuel soaked or very high temperature application. Non-hazardous alternative to low adhesion, two component sealants. Some of these sealing tapes have a low peel strength adhesive on one side to hold the tape in place on one surface while the mating part is being installed.
	GUA-1071-1 for fay surfaces ≤1 in wide	No mixing, masking, or curing required	
	GUA-1001-1 for fay surfaces &;gt; 1 in wide	Service temp: -65° to + 450° F (-54° to + 232° C) with short term exposure to 600° F (315° C)	
	GUA-1001-2 for fay surfaces &;gt;1 in wide where thicker tape is needed to fill fay surface gap	Peel strength: 2 lb/in width (max) for side with adhesive only	
	GUA-1017-1 for fay surfaces ≤ 1 in wide	No corrosion inhibitors	
	GUA-1401-1 for fay surfaces ≤ 1 in wide in dry areas of floorboards and where a thicker tape is needed to fill fay surface gaps	Resists water, fuel, oil, and hydraulic fluid	

Table 6-1. Sealing Compounds - Continued

Specification	Types Available	Properties	Intended Use
	GSC-21-80767-00- for fay surfaces < 1 in in high moisture areas of floorboards and where thicker tape is needed to fill fay surface gaps Class 2: Continuous Non-Ribbed, includes: Skyflex PN's GUA-1003-1- compensation tape a narrow un-ribbed tape used to fill irregularities on a sealing surface or repair minor damage to a previously applied tape seal GUA-1057-1- for fay surfaces <1 in wide, used as shim/barrier to resist minor chafing GUA-1058-1(for fay surfaces <1 in wide, used as a shim/barrier to resist minor chafing GUA-1059-1 for fay surfaces >1 in wide , used as shim/barrier to resist minor chafing GUA-1301-1- for fay surface <1 in wide with thick gaps.		
Av-Dec® HiTak® Polyurethane Tape Sealant (PN HT3935-7-XXX)		Preformed gasket tape with adhesive on both sides and thin polyethylene release film on one side	For fay surface sealing of areas where fluid intrusion is a problem such as aircraft floor panels and cargo tie down fittings. For maximum sealing, remove the release film for adhesion to both surfaces. For easier panel removal and maximum reusability, leave the release film in place on the side contacting the removable panel. Damaged sections of the tape are easily repaired as it has very good adhesion to itself.
	-100 for fay surfaces ≤ 1 in wide	No mixing, masking, or curing required	
	-150 for fay surfaces &;gt; 1 in up to 1.5 in wide	Service Temp: (85° to + 275° F (65° to +135° C) will withstand short non-continuous exposure to higher temperatures	
	-200 for fay surfaces > 1.5 in up to 2 in wide	Peel Strength: 1-4 inlb width	

Table 6-1. Sealing Compounds - Continued

Specification	Types Available	Properties	Intended Use
Av-Dec® HiTak® TufSeal™ Polyurethane Tape Sealant (PN HT3000-XXX)	-250 for fay surfaces > 2 in up to 2.5 in wide -100 for fay surfaces ≤ 1 in wide -150 for fay surfaces >1 in up to 1.5 in wide -200 for fay surfaces >1.5 in up to 2 in wide	No corrosion inhibitors Resists water, deicing fluids, fuel, oil, and hydraulic fluid (including Skydrol LD-4) Preformed gasket tape with adhesive on one side and a permanent Teflon (film baking on the opposite side No mixing, masking, or curing required Service Temp: (85° to +275° F (65° to +135° C) Peel Strength: 2-5 inlb width adhesive side only, the other side has a permanent Teflon (film backing No corrosion inhibitors Resists water, deicing fluids, fuel, oil, and hydraulic fluid (including Skydrol LD-4)	For fay surface sealing of non-permanent structure such as access and inspection panels/covers on aircraft, missiles, and equipment to prevent fluid entry into the faying surface areas and the cavities over which the panels/covers are installed. The Teflon (backing is highly abrasion resistant and permits slight movement of the covers without damaging the structure to which it is attached. The tape is very durable, so it may be reused many times once it is installed, and damaged sections are easily repaired as it has very good adhesion to itself.
Av-Dec® SelfLeveling™ (Green (PN HT 3326-5-XXX) and Thixoflex (Orange Injectable (PN TF2219) Sealants	Self Leveling (Green (for filling voids and/or cavities on horizontal surfaces where a self leveling liquid may be used; supplied in either 50cc (-050) or 200 (-200) cartridges Thixoflex™ Orange - for filling voids/cavities on horizontal, vertical, or overhead surfaces where a paste material is required; supplied in 50cc cartridges	Two component sealants; both are supplied in dual syringes containing the required amounts of resin and hardener for mixing on site Mixing and dispensing is accomplished with accessories obtained from the vendor per the vendor's instructions Service Temp: -60° to +260° F (-51° to +127° C) (either type	The SelfLeveling™ (Green sealant is intended to fill voids/cavities on horizontal surfaces such as aircraft seat track depressions to prevent fluids from accumulating in them and causing corrosion while still being easily removed for required inspections and/or operational use. Also useful to fill cavities around antenna connectors.

Table 6-1. Sealing Compounds - Continued

Specification	Types Available	Properties	Intended Use
		Peel Strength: both 1-4 inlb width No corrosion inhibitors Resists water, deicing fluids, fuel, oil, and hydraulic fluid (including Skydrol LD-4).	The Thixoflex™ Orange sealant is intended for filling the same voids/cavities as above as well as those on vertical and overhead surfaces while still being easily removed for required inspections and/or operational use.

6.3.4 Adhesion Promoters.

CAUTION

Solvent based adhesion promoters are hygroscopic (absorb moisture) and must be kept away from moisture. Discard material if it becomes cloudy or a precipitate is formed.

Some sealing compounds may require the application of a special primer or adhesion promoter prior to sealant application in order to develop a good adhesive bond with the surface. Use only those primers or adhesion promoters recommended by the manufacturer for their product. These materials are especially important for MIL-S-85420, SAE AMS-S 29574 (refer to MIL-S-29574) and some silicone based sealants. Refer to Appendix A for a listing and description of adhesion promoters.

6.3.5 SAE AMS 3255 Oil and Water Resistant, Expanded Polytetrafluoroethylene Sealing Tape (EPTFE) (Skyflex. The sealant tape consists of an extruded gasket (most of the time with several protruding ribs) with a pressure sensitive adhesive backing. No mixing is required and there are no application life constraints or cure times involved. The sealing tape does not require removal and replacement unless damaged. The adhesive backing is only required to hold the sealing tape in place until an access panel, floor panel, or component is (re)installed. Tapes may be special ordered without adhesive backing for use in areas where fluid exposure (e.g. hydraulic fluid or fuel) is expected and applied with a fluid resistant rubber cement. Refer to Table 6-1 for a general description of these tapes.

NOTE

Use of the EPTFE (Skyflex) sealing tape requires authorization from the aircraft SPD or the missile or equipment SPM engineering authority.

6.3.6 Av-Dec® Polyurethane Sealant Tapes and Two Component Sealants. Av-Dec® sealing tapes are precured polyurethane gasket tapes with the HT3935-7 series having a tacky adhesive on both sides and the HT3000 series having a tacky adhesive on one side and a permanent Teflon(film backing on the other side. These tapes require no mixing, have unlimited application life, and require no cure time. The HT3995-7 series tapes are particularly useful for sealing high moisture areas such as aircraft floor panels. The HT3000 series are useful for sealing frequently removed inspection and access panels, since once applied they are totally reusable unless damaged; damaged areas only may be removed and replaced. The HT3326-5 Self Leveling Green liquid and TF2219 thick orange paste materials are two component curable sealants that are particularly useful in filling voids and cavities to prevent moisture and fluid accumulation and subsequent corrosion damage in areas where ease of removal for inspection and/or operational requirements is necessary.

6.4 EQUIPMENT.

The following equipment is available:

NOTE

Avoid air bubbles as much as possible during the filleting operation. Allow the sealant to cure to, at least, the tack-free stage before moving the assembly.

6.4.1 Sealant Gun. The Semco® Model 250-A or its equivalent (Figure 6-1), fitted with one of the nozzles from Figure 6-2 is used for the application of fillet seals. When using this gun, the nozzle tip must be pointed into the seam and maintained at a 45 degree angle to the line of travel, forcing the bead of sealing to precede the gun tip to minimize entrapment of air. Use fairing/smoothing tools (i.e., spatulas and spreaders) shown in Figure 6-5 to work sealants and adhesives into seams.

6.4.2 Application Nozzles.

CAUTION

Care should be taken when using rivet nozzles to prevent sealant material from filling fastener holes.

In addition to the standard, fillet, and ribbon nozzles in Figure 6-2, the countersink and rivet nozzles in Figure 6-3 and Figure 6-4, respectively, can also be used with sealant guns. Countersink nozzles can be used to apply sealants into the countersink of fastener holes prior to fastener installation. Rivet nozzles are suitable for use to apply sealants into countersink and through hole prior to fastening part(s) with rivets. The rivet nozzles have a spring-loaded tip. It serves as a check valve and allows for dispensing the precise amount of sealant material.

6.4.3 Injection Gun. Figure 6-6 illustrates two types of injection guns used for injecting sealant into confined holes, slots, structural voids, joggles, etc. Follow the procedures outlined in the applicable aircraft, missile, or equipment system peculiar maintenance manual and the injection gun manufacturer's operation instructions for the proper preparation and use of these guns. For hard to reach areas, attach an extension nozzle to the injection tip.

MODEL 250-A PNEUMATIC SEALANT DISPENSING GUN (WITH HANDLE)

*250 (PN = 250255) . 2-1/2 OZ CAPACITY
250 (PN = 250065) . . 6 OZ CAPACITY

ALL PARTS INTERCHANGEABLE

NOTES

1. PLASTIC CARTRIDGE AND STEEL SAFETY RETAINER DETERMINE CAPACITY. ALL OTHER PARTS ARE IDENTICAL.

2. TOTAL WEIGHT (6 FL OZ GUN) - 15 OZ

3. LENGTH OVERALL LESS NOZZLE (6 OZ GUN) - 8-1/2 IN.

4. PISTOL GRIP HANDLE MAY BE REMOVED TO CONVERT TO LEVER THROTTLE FOR CONFINED AREAS.

*5. 2-1/2 OZ CAPACITY RECOMMENDED FOR MOST FIELD REPAIRS.

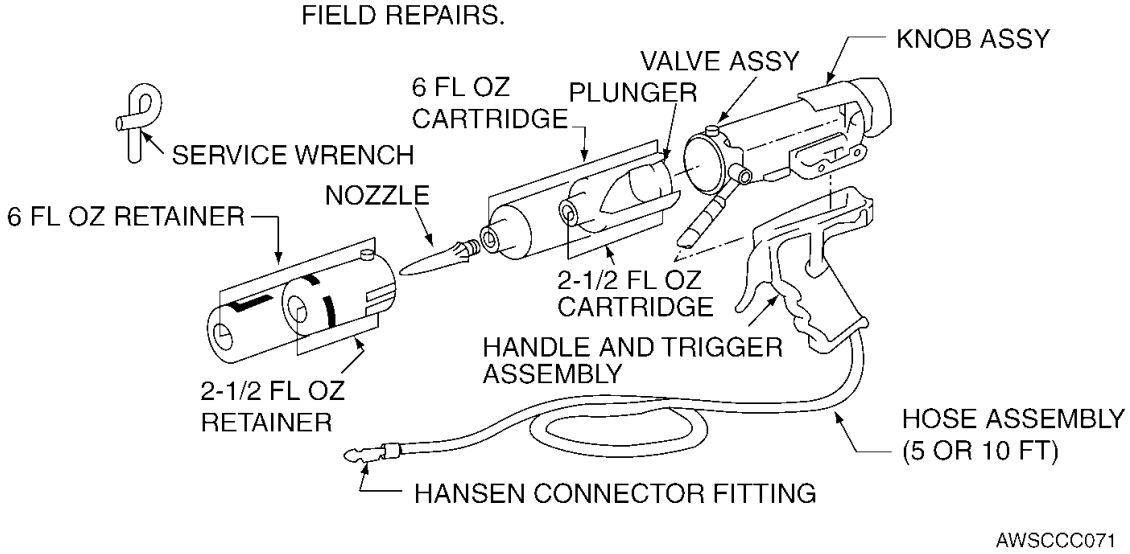

Figure 6-1. Pneumatic Sealant Gun

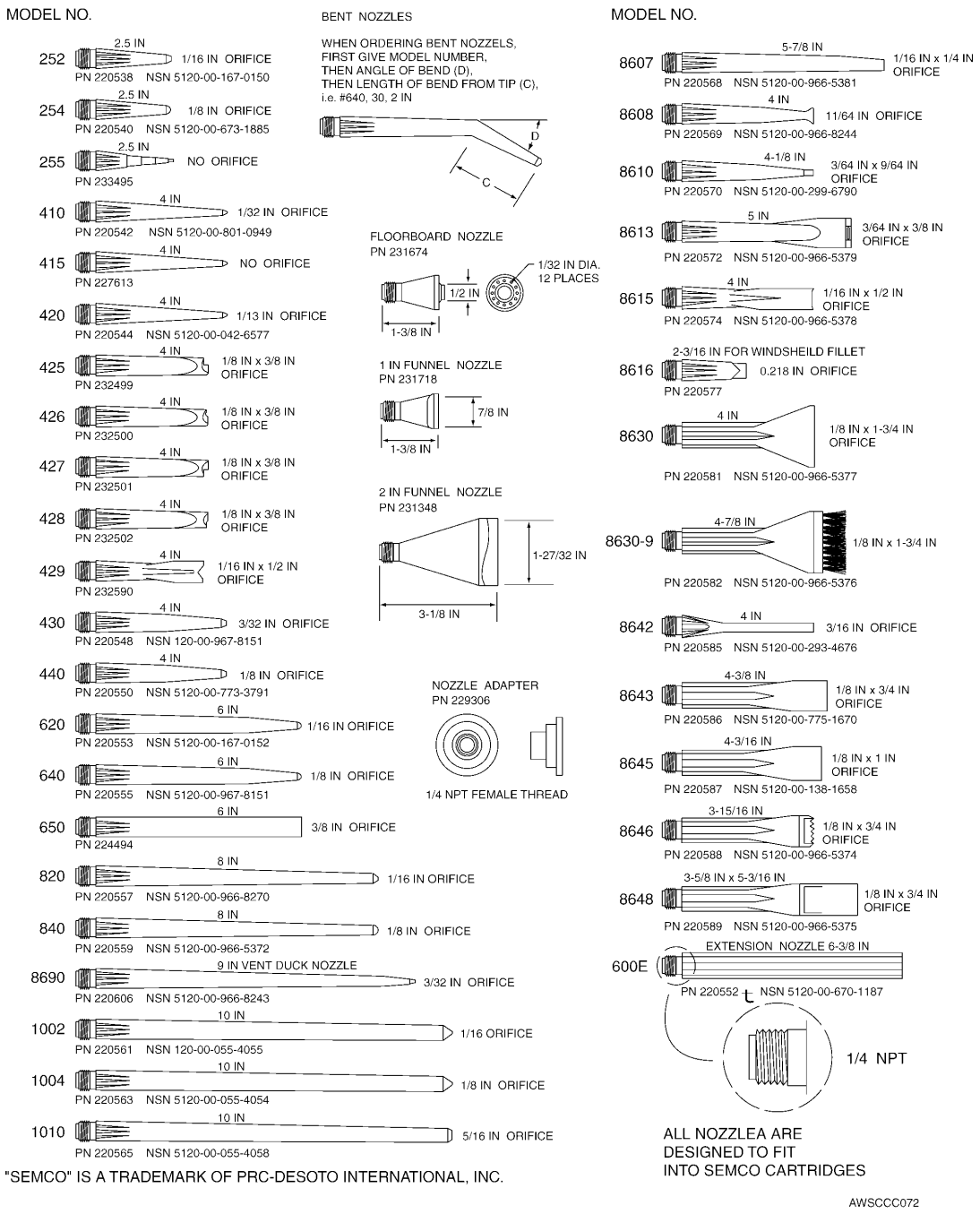

Figure 6-2. Sealant Application Nozzles

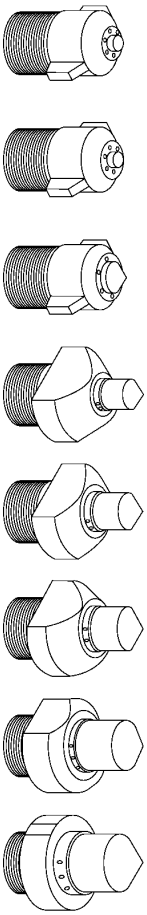

PART NUMBER	COLOR	SIZE	QUANTITY HOLES
233244	RED	3/32 IN - 1/8 IN	6 HOLES
233243	WHITE	3/16 IN - 1/4 IN	6 HOLES
233451	BLUE	5/16 IN - 3/8 IN	6 HOLES
231319	YELLOW	1/4 IN HOLE	6 HOLES - 0.028 IN
231320	GREY	5/16 IN HOLE	6 HOLES - 0.028 IN
231321	GREEN	3/8 IN HOLE	6 HOLES - 0.028 IN
231560	RED	7/16 IN HOLE	6 HOLES - 0.028 IN
231559	BLUE	1/2 IN HOLE	4 HOLES - 0.028 IN

NOTE

FASTENER SEALING (COUNTERSINK) NOZZLES ARE USED TO APPLY THE REQUIRED AMOUNT OF SEALANT IN THE COUNTERSINK OF FASTENER HOLES, PRIOR TO INSTALLATION OF FASTENER. WHEN PROPERLY USED, SEALANT WILL BE APPLIED TO THE PERIMETER OF THE COUNTERSINK AND NOT INSIDE THE HOLE. THE ASSORTED FASTENER SEALING NOZZLE SIZES ARE COLOR CODED FOR IDENTIFICATION.

AWSCCC073

Figure 6-3. Countersink Application Nozzles

	PART NUMBER	COLOR	FITS HOLE SIZE	SIZE AND QUANTITY OF DISPENSING HOLES
3/32 IN	234285	GERMAINE GREEN	3/32 IN	0.030 IN DIA, 6 EA EQUALLY SPACED
1/8 IN	226837	BLUE	1/8 IN	0.031 IN DIA, 6 EA EQUALLY SPACED
5/32 IN	226838	BLACK	5/32 IN	0.035 IN DIA, 6 EA EQUALLY SPACED
3/16 IN	226839	WHITE	3/16 IN	0.060 IN DIA, 6 EA EQUALLY SPACED
3/16 IN-120°	234260*	GREEN	3/16 IN-120°	0.030 IN DIA, 6 EA EQUALLY SPACED
7/32 IN	234284	LIGHT BLUE	7/32 IN	0.046 IN DIA, 6 EA EQUALLY SPACED
1/4 IN	226840	RED	1/4 IN	0.044 IN DIA, 6 EA EQUALLY SPACED
5/16 IN	233051	ORANGE	5/16 IN	0.062 IN DIA, 6 EA EQUALLY SPACED
3/8 IN	233052	YELLOW	3/8 IN	0.062 IN DIA, 6 EA EQUALLY SPACED

*PN 234260 APPLIES SEALANT TO COUNTERSINK ONLY.

NOTE

RIVET NOZZLES ARE USED TO APPLY THE REQUIRED AMOUNT OF SEALANT INTO THE COUNTERSINK AND THROUGH HOLE PRIOR TO FASTENING PARTS WITH RIVETS. THE SPRING-LOADED TIP OF THE RIVET NOZZLE ACTS AS A CHECK VALVE ALLOWING PRECISE SHOTS OF MATERIAL TO BE DISPENSED. THE ASSORTED SIZES ARE COLOR CODED FOR EASY IDENTIFICATION.

AWSCCC074

Figure 6-4. Rivet Application Nozzles

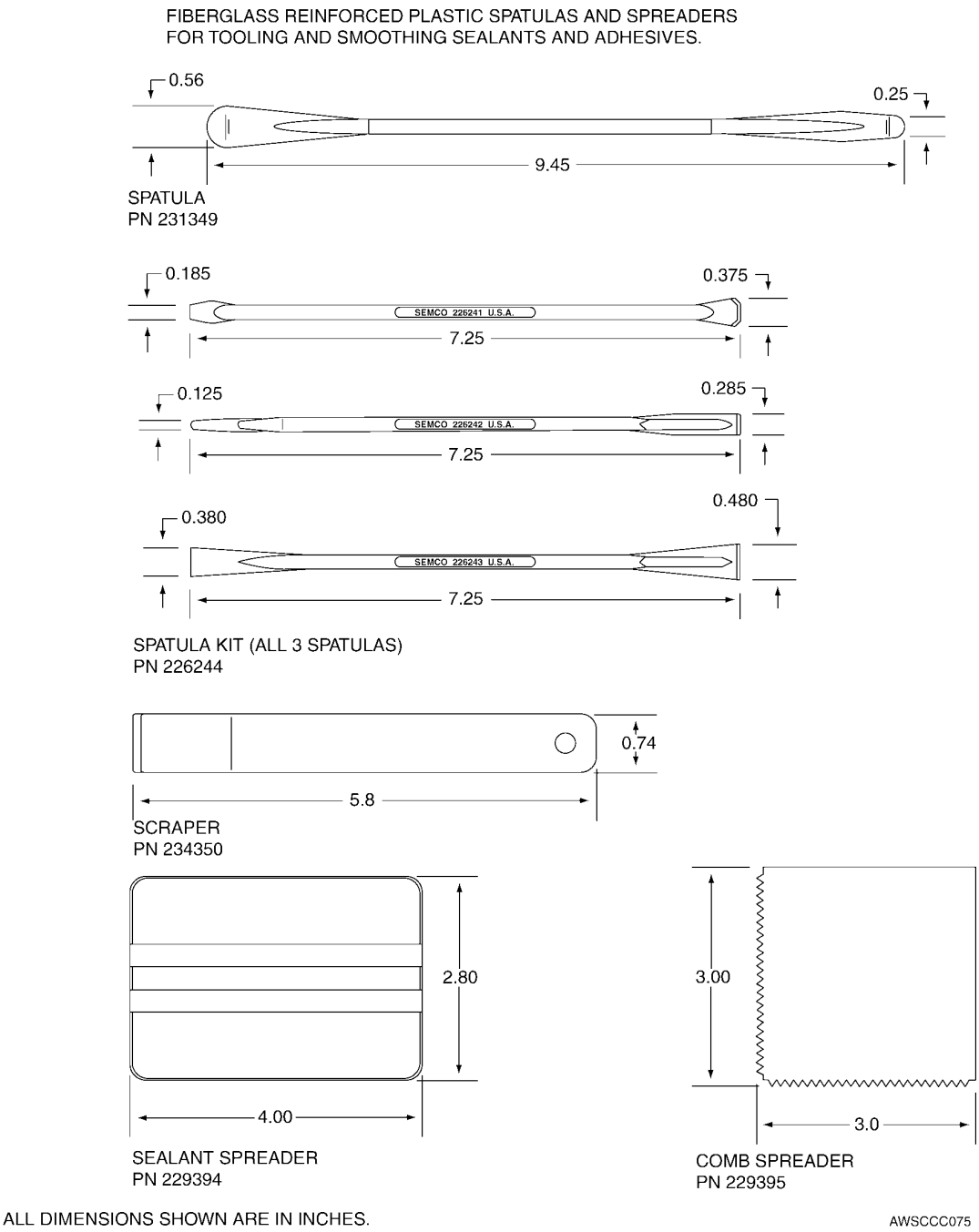

Figure 6-5. Sealant and Adhesive Smoothing Tools

Figure 6-6. Sealant Injection Guns

6.4.4 Sealant Kits (Semkits®).

CAUTION

Before using sealant materials, refer to the sealant Material Safety Data Sheet (MSDS) for information on handling precautions.

Certain types of sealants, such as SAE AMS-S-8802 (MIL-S-8802) and MIL-PRF-81733, are available as ready to use kits (Semkits®). These kits are compact, two-part mixing application units designed for convenient storage, easy mixing, and proper application of the sealant in small quantities. The base component of the sealant is packed in standard 2-½ ounce and 6 ounce cartridges which are placed in a filleting gun or injection gun for application after mixing with the accelerator/catalyst. There are two styles: the Barrier Style, which holds proportioned amounts of the two components separated by an aluminum barrier disc; and the Injection Style, which stores the accelerator/catalyst material within the injection rod to separate it from the base compound prior to use (Figure 6-7). When using Semkits®, note that the handle or the injection/dasher rod contains a pre-measured amount of accelerator/catalyst and should be retained until the ramrod has been operated to break the seal at the bottom of the injection/dasher rod releasing the accelerator/catalyst into the base component and mixing is completed. All of the materials contained inside these two-component Semkit® packages are mixed within the cartridges. Follow the manufacturer's recommended storage instructions for these Semkits®.

6.4.5 Sealant Removal and Application Tools. The most commonly used tools for removing or fairing out sealants are shown in Figure 6-5. Other tools may be

manufactured as needed to fit a specific situation. Only plastic shall be used to manufacture these sealant removal and application tools.

6.5 SEALANT MIXING.

The proper weighing and mixing of components is essential to assure proper curing and adhesion of sealants. Use an appropriate weight scale (refer to Appendix B) to accurately measure the materials before blending. Accomplish all mixing in one designated central area in each organization. Polysulfide and polythioether sealants consist of two separately packaged components, a base compound (usually part B) and an accelerator/catalyst (usually part A) in ½ pint (6 oz), pint (12 oz), and quart (24 oz) kits. The base-to-accelerator/catalyst ratio varies with different manufacturers of the same type of sealant. It is important, therefore, to mix the material according to the manufacturer's instructions recommendations. Add accelerator/catalyst into the base in the correct ratio and mix until a uniform color is obtained. Difficulties with curing and/or adhesion of poly-sulfide and polythioether sealants are frequently caused by incomplete mixing. Two component sealants are chemically cured and do not depend on solvent evaporation for curing. Slow hand mixing is recommended for two-component can type kits. A high speed mechanical mixer should not be used as internal heat will be generated thus reducing application life and introducing air into the mixture. Refer to Figure 6-7 for injection style Semkit® mixing instructions.

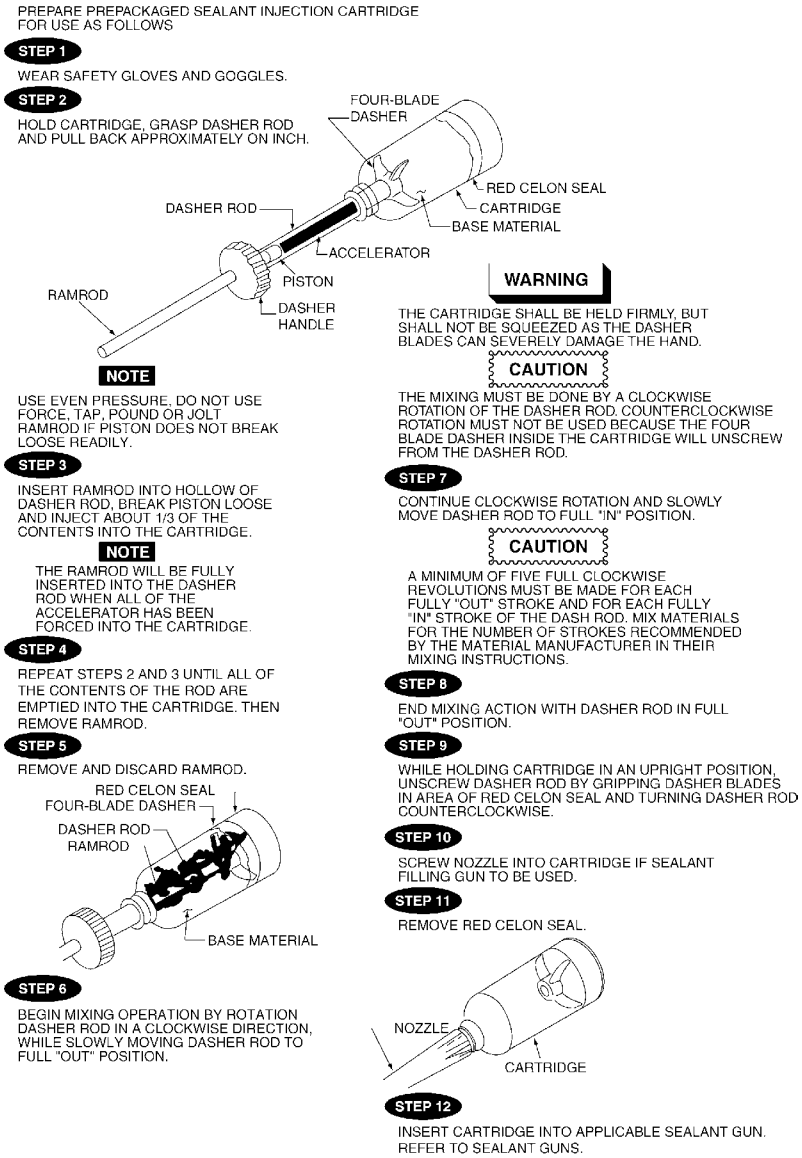

Figure 6-7. Injection Style Semkit®

6.5.1 Application Life.

NOTE

- Do not use any mixed two-part sealant after its rated application life has expired, as poor adhesion may result.
- To determine if a sealant is suitable for a specific application, review the individual sealant specification and guidelines provided in Table 6-1.
- Only sealants with a 2 hour or greater application life may be pre-mixed and frozen as the application life of these sealants after thawing is decreased by ½ hour from the rated application life.

Application life and cure times are dependant on environmental considerations. The application life of a sealant is the length of time that a mixed sealing compound remains usable at 75° F (24° C) and 50 percent relative humidity (RH). This time (in hours), known as a dash number, is denoted as the last number in a sealant designation (e.g. MIL-PRF-81733, Type II-2 has an application life of two hours). For each 18° F (10° C) increase in the temperature above 75° F (24° C), the application time is cut by approximately half with a similar reduction in tack-free and cure times. Table 6-2 indicates application times, tack-free times, and full cure times for each sealant type and dash number at 75°(and 50% RH. When sealants are applied in an environment where the RH is greater than 50%, its application life is shortened to some degree. Maintenance personnel should be aware of the effects of temperature and humidity on the application life of a sealant. Mix only the amount of material that can be applied during the rated work life of the sealant.

Table 6-2. Time Requirements for Sealants When Used At 75 Degree F (24 Degree C) and 50 Precent RH

Specification		Type or Class[1]	Assembly Time (Hr)	Tack-Free Time (Hr)	Approximate Fly Away Time (Hr)	Application Method(s)
MIL-PRF-81733		I, CL 2-¼	-	4	-	Brush
(Supersedes MIL-S-81733)		I-½		CL1-16 CL2-8	-	Brush
		I-2	-	CL1-24 CL2-16	-	Brush
		II, CL 1-1/6	-	4	-	Gun or spatula
		II-¼	-	CL1-8 CL2-1	-	Gun or spatula
		II-½	-	CL1-16 CL2-2	-	Gun or spatula
		II-2	-	CL1-24 CL2-12	-	Gun or spatula
		II-4	-	32	-	Gun or spatula
		III-1	-	8	-	Spray
		IV-4	8	40	-	Brush or spatula
		IV-12	24	120	-	Brush or spatula
		IV-24	48	180	-	Brush or spatula
		IV-40	120	600	-	Brush or spatula
		IV-48	168	1008	-	Brush or spatula
SAE AMS-S-8802		A-½	-	10	40	Brush
(Supersedes MIL-S-8802)		A-1	-	20	55	Brush
		A-2	-	40	72	Brush
		B-½	-	10	30	Gun or spatula
		B-1	-	20	55	Gun or spatula
		B-2	-	40	72	Gun or spatula

Table 6-2. Time Requirements for Sealants When Used At 75 Degree F (24 Degree C) and 50 Precent RH - Continued

Specification		Type or Class[1]	Assembly Time (Hr)	Tack-Free Time (Hr)	Approximate Fly Away Time (Hr)	Application Method(s)
		B-4	-	48	90	Gun or spatula
		C-12	12	-	-	Brush or spatula
		C-20	20	96	-	Brush or spatula
		C-80	80	120	-	Brush or spatula
		C-96	96	-	-	Brush or spatula
AMS 3276		A-½	-	10	30	Brush
(Supercedes MIL-S-83430)		A-2	-	24	72	Brush
		A-4	-	36	90	Brush
		B-¼	-	6	16	Gun or spatula
		B-½	-	10	30	Gun or spatula
		B-1	-	12	36	Gun or spatula
		B-2	-	24	72	Gun or spatula
		B-4	-	36	90	Gun or spatula
		B-6	-	48	120	Gun or spatula
		B-12	-	120	240	Gun or spatula
		C-½	-	10	30	Brush or spatula
		C-2	-	24	72	Brush or spatula
		C-8	20	96	120	Brush or spatula
		D-¼	-	6	16	Gun or spatula
		D-½	-	10	30	Gun or spatula
		E	6	120	240	Used w/auto rivet equip.
PR-1773 (Supercedes PR-1403G)		B-½	-	4	6	Gun or spatula
PRC-DeSoto Int.		B-2	-	8	16	Gun or spatula
AMS 3267	/1	A-½	-	10	24	Brush
(Supersedes MIL-S-8784)	/3	A-2	-	24	72	Brush
	/2	B-½	-	10	24	Gun or spatula
	/4	B-2	-	24	72	Gun or spatula
AMS 3374	/1	1 -N/A	-	6	14 days	Gun or spatula
(Supersedes	/2	2 -4	-	24	7 days or 1day @ 120° F (49° C)	Gun or spatula
MIL-S-38249)	/3	3 -4	-	6	14 days	Gun or spatula
	/4	4 -½	-	2	7 days	Gun or spatula
MIL-S-85420		Ty I, Cl A-1/6	-	2 (ST), 4 (LT)[2]	4 (ST), 8 (LT)[2]	Brush
		Ty I, Cl B-1/6	-	2 (ST), 6 (LT)[2]	4 (ST), 8 (LT)[2]	Gun or spatula
		Ty II,ClA-1/6	-	2 (ST), 4 (LT)[2]	4 (ST), 6 (LT)[2]	Brush

Table 6-2. Time Requirements for Sealants When Used At 75 Degree F (24 Degree C) and 50 Precent RH - Continued

Specification		Type or Class[1]	Assembly Time (Hr)	Tack-Free Time (Hr)	Approximate Fly Away Time (Hr)	Application Method(s)
		Ty II,ClB-1/6	-	1¼ (ST), 4 (LT)[2]	4 (ST), 6 (LT)[2]	Gun or spatula
AMS -S-29574		A-¼	-	1 / 3 / 6[3]	1.5 / 4 / 8[3]	Brush
(MIL-S-29574)		A-½	-	1.5 / 3 / 6[3]	3 / 8 / 16[3]	Brush
		A-2	-	9	14	Brush
		B-¼	-	1 /3 / 6[3]	1.5 / 4 / 8[3]	Gun or spatula
		B-½	-	2 / 6 / 6[3]	3 / 8 / 16[3]	Gun or spatula
		B-2	-	9	14	Gun or spatula
		C-4	8	-	24	Brush or spatula
MIL-A-46146		Gp I, Ty I	-	5	-	Gun or spatula
		Gp I, Ty II	-	5	-	Pour
		Gp II, Ty I	-	5	-	Gun or spatula
		Gp II, Ty II	-	5	-	Pour
		Gp III, Ty I	-	5	-	Gun or spatula
		Gp III, Ty II	-	5	-	Pour
AMS 3255-EPTFE Sealing Tape (Sky-flex®)		Class 1	-	0	0	Peel and Stick
Av-DEC™ HT3935-7 & HT3000 FR Series		Class 2	-	0	0	Peel and Stick
Polyurethane Sealing Tapes		-	-	0	0	Peel and Stick
Av-DEC™ Injectable Polyure-thane Seal-ants		SelfLevel-ing™ Green, HT3326-5	<20 (minutes)	45 (minutes) max	-	Gun with syringe
		Thixoflex™ Orange, TF2219	<3 (minutes)	7 (minutes) max	-	Gun with syringe

1 The number after the dash (-) indicates the room temperature working life of the sealant after it is mixed.
2 (ST) =Standard Temperature of +75° F (+24° C); (LT) = Low Temperature of +45° F (+7° C).
3 1st # @ +75° F (+24° C); 2nd # @ +40° F (+4° C); 3rd # @ +20° F (-7° C).

6.5.2 Storage Instructions. When large quantities of sealants are used, such as for depot level maintenance operations, it may be advantageous to premix and freeze sealants to provide a ready supply of mixed sealants when they are needed. Store two-part kits and Semkit® package sealants according to instructions on the container. Store polysulfide sealants in a pre-mixed and frozen (PMF) form in a freezer at -40° F (-40° C) or below for retention of optimal application properties and shelf life. Polythioether sealants require extremely low temperature refrigeration at -80° F (-62° C) or below for optimal retention of application properties and shelf life. Thawing of PMF sealants can be accomplished in two ways. For ambient temperature thaw, place the PMF cartridge in a vertical position. Let stand at +70° to +80° F (+21° to +27° C) approximately 30 minutes. Dry any condensation from the exterior of the cartridge prior to use. For water bath thaw, place the PMF cartridge upright in a +120° F (49° C) water bath for approximately 4 to 6 minutes. Upon removal from the bath, carefully dry the exterior of the cartridge before using.

6.5.3 Mixing MIL-PRF-81733, Type III Spray-able Sealant Coating. The base component (Part B) of MIL-PRF-81733, Type III has a tendency to settle out during storage, so it requires thorough mixing with a standard paint shaker to obtain a uniform consistency before the addition of the accelerator component (Part A). The accelerator component (Part A) requires hand shaking or stirring with a wood stir paddle/stick in its container to obtain a uniform consistency before adding it to the base component (Part B). After both components, base and accelerator, have been stirred/mixed separately, add the proper amount of the accelerator to the base in its container and mix the combined materials, preferably with a paint shaker for 3 minutes in an upright position followed by 3 minutes in an inverted position for kits up to 1 gallon, and for 5 to 10 minutes with an air driven agitator in a pressure pot for kits greater than 1 gallon. For proper application life and cure, the base and accelerator must be combined in the proper ratio and mixed prior to the addition of any thinner (solvents). After mixing, the sealant may be thinned for spraying to a viscosity of 20 to 25 seconds in a No. 2 Zahn cup (refer to TO 1-1-8) with a 20 to 30% by volume addition of a 50% by volume mixture of MEK conforming to ASTM D 740 and Toluene conforming to A-A-59107, and stirring for 2 minutes with an air driven agitator at 70 RPM.

6.6 SEALANT APPLICATION PROCEDURES.

WARNING

- Solvents are flammable. Never use near ignition sources, i.e. lighted cigarettes, electrical arcing, heat sources, etc.
- When cleaning an area prior to applying a sealant, apply a small amount of solvent to a clean cloth, wipe the surface, and follow by wiping with a clean, dry cloth. Immediately after use, place used rags into an appropriate HAZMAT container, and then dispose of per local directives. This minimizes exposure of personnel to and release of solvent vapors into the environment.
- Sealants, with the exception of SAE AMS 3255 (Skyflex®) EPTFE and Av-Dec® sealant tapes, are toxic to the skin, eyes, and respiratory tract. Wear rubber or polyethylene gloves and chemical proof goggles and/or face shield when using these materials, and make sure ventilation is adequate in the area where they are used. Wash hands thoroughly with soap and water before eating or smoking.

CAUTION

- MIL-PRF-81733 is not suitable for use on the interior of integral fuel tanks and shall not be used for these applications. SAE AMS-S-8802 (MIL-S-8802) and SAE AMS-S-29574 (MIL-S-29574) are the authorized sealants for the interior of integral fuel tanks.
- No RTV sealant which produces acetic acid such as those conforming to MIL-S-46106 shall be used on aircraft. No RTV sealant shall be used in areas where exposure to fuels and oils will be encountered. If RTV sealants are required by the structural repair manual, ensure that the sealant conforms to MIL-A-46146, Adhesives/Sealants, Silicone, RTV, Noncorrosive (for use on sensitive metals and equipment), and/or is listed in Appendix A as being a non-corrosive RTV silicone sealant.

- SAE AMS-S-8802 (MIL-S-8802) sealant should not be exposed to fuel or overcoated until it is tack-free as it will not cure properly. SAE AMS-S-8802 is used to fillet and brush seal on the inter-ior of integral fuel tanks only.
- Do not use AMS 3267 (MIL-S-8784) sealant in high temperature areas or for permanent structural installations. These sealants have no high temperature resistance and very low peel strength. Some typical uses of SAE AMS 3267 (MIL-S-8784) sealants include sealing aircraft floor panels and plates, and fuel tank inspection plates.

6.6.1 Cleaning. If the surfaces have been contaminated following corrosion removal and surface treatment per instructions in Chapter 5, clean the area with a clean CCC-C-440, Type I or II, Class 2 cheesecloth; an AMS 3819A, Class 2, Grade A cleaning cloth; or a CCC-C-46, Type I, Grade 7 non-woven cleaning cloth saturated with either A-A-59281, Type I or AMS 3166 solvent. Begin at the top of the area to be sealed and work downward. Dry the surfaces immediately with a clean cloth. Do not allow solvent to evaporate from the surface because it will allow some or all of the oil, dirt, etc. to redeposit, making it impossible to remove with a dry cloth. Use a stiff bristle brush to clean around bolts, rivets, etc. Always use clean cloth as each new area is cleaned.

NOTE

Always pour solvent on the cloth to avoid contaminating the solvent supply. Reclaimed solvents or soiled cleaning cloths shall not be used. After surface treatment, do not contaminate areas to be sealed with soiled hands or tools.

6.6.2 Masking. To prevent sealant from contacting adjacent areas during application and smoothing out operations, the surrounding area not being sealed can be masked off with AMS-T-21595, Type I masking tape (Figure 6-8). In cases where the tape is likely to remain in place for more than two days on items exposed to direct sunlight and where tape residue on the surface cannot be tolerated, use AMS-T-22085, Type II (3M Co. PN 481 or 225) preservation and sealing tape. Masking tape is very useful during fillet sealing of exterior surface lap and butt seams.

6.6.3 Adhesion Promoters. In some cases, it may be necessary to improve the adhesion of sealants by the use of adhesion promoters. Adhesion promoters are solvents that contain additives which leave a residue on the surface after solvent evaporation to promote adhesion. To apply, clean the area per Paragraph 6.6.1, brush or wipe the surface to be sealed with the liquid solution, and allow the treated surface to dry by evaporation without touching the treated areas for 30 minutes to an hour before applying sealant. AMS 3100 adhesion promoter (PN: PR-148 or PR-182) is essential to repairing integral fuel tanks where new polysulfide sealant will be applied over aged, fuel soaked polysulfide sealant. If a polythioether sealant is to be applied over a polysulfide sealant, PN PR-186 is recommended for use at the sealant interface. If the surface becomes contaminated or sealant is not applied within two hours after applying an adhesion promoter, re-clean the area and reapply the adhesion promoter per the above instructions. Refer to Appendix A for information relative to purchasing/ordering these adhesion promoters.

6.6.4 Brush Spatula or Caulking Gun Application. Prior to masking and sealing, prepare and clean the surface in accordance with Paragraph 6.6.1.

CAUTION

Do not contaminate areas to be sealed with hands, tools, etc. after surface treatment and primer application.

6.6.4.1 To prevent sealant from contacting adjacent areas during application and smooth out, outline the areas being sealed with masking tape (AMS-T-21595, Type I) so that each tape strip is 1/16 to 3/8 in from the edge of butt seams and the upper surface edge of a lap seam, and ¼ to 3/8 in from the lower surface edge of a lap seam. If tape residue on these surfaces is excessive, remove adhesive residues using TT-N-95 aliphatic naphtha. Masking may be very beneficial during fillet sealing of exterior surface lap seams and filling exterior surface butt seams.

6.6.4.2 Apply sealant between the pieces of tape.

6.6.4.2.1 Thick sealants may be applied with a non-metallic spatula or spreader to fillet seal lap seams or flush fill butt seams as shown in Figure 6-8. Avoid the entrapment of air. Work sealant into recesses by sliding the edge of the spatula firmly back over recesses. Smoothing will be easier if the non-metallic spatula is first dipped in water.

6.6.4.2.2 Brushable sealants are applied with a brush and smoothed until the desired thickness is reached.

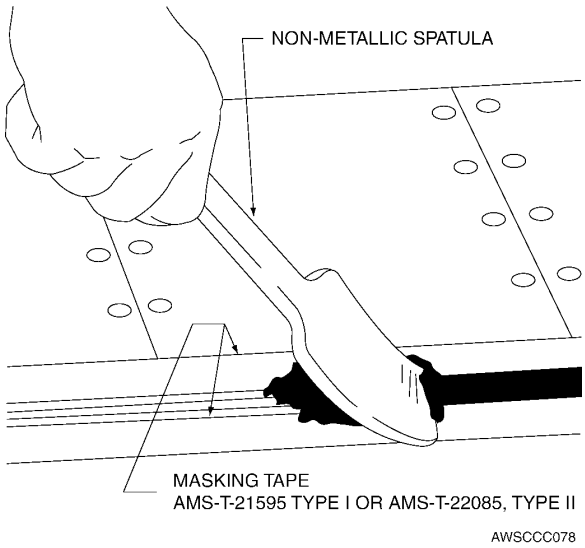

Figure 6-8. Non-metallic Spatula

6.6.4.2.3 Thick sealants may be applied with a caulking gun, and if done carefully, will not usually require masking. This method is especially adaptable to filling seams or the application of form-in-place gaskets. On exterior surfaces where aerodynamic smoothness is required, masking is necessary to allow smoothing the sealant after application without smearing it onto surrounding surfaces.

6.6.4.3 Remove masking tape after the sealant has been applied and before it begins to set. Cure time depends on the application life of the sealant materials used, the temperature, and the RH. When sealant no longer feels tacky, prime and topcoat as necessary and required by system peculiar technical data per application instructions in TO 1-1-8.

6.6.4.4 d. Remove all uncured sealant residue by wiping the area with an SAE AMS 3819A, Class 2, Grade A or equivalent cleaning cloth wetted with a liquid product known as Sky Wash® distributed by AeroSafe Products Inc. and wiping dry with a clean, dry cloth of the same type.

NOTE

MEK conforming to ASTM D 740 may be used as an alternate solvent for cleaning up uncured sealant residues as long as it is not environmentally prohibited and the aircraft SPD and/or the missile or equipment SPM approves its use and requires it in system peculiar technical data.

6.6.5 Spray Gun Application. Prior to masking and sealing, prepare surface in accordance with Paragraph 6.6.1.

CAUTION

If any dirt or oil residues accumulate after conversion coating, clean thoroughly with solvent to ensure adequate adhesion of paint, primer, and sealant.

a. Mask off adjacent areas with either MIL-PRF-121, Type I or II, or MIL-PRF-131, Class 1 barrier material held in place with AMS T-21595, Type I masking tape to minimize overspray on adjacent areas.

b. Apply MIL-PRF-81733, Type III sprayable sealant in a solid, continuous pattern per the manufacturer's instructions and TO 1-1-8.

NOTE

The dry film thickness (DFT) of spray sealant coatings shall be in the range of 3 to 5 mils (0.003 to 0.005 in).

6.6.6 Peel and Stick Application; AMS 3255 EPTFE Skyflex® and Av-Dec® HT3935-7 and HT3000 Sealing Tapes. Prior to application, prepare surface in accordance with Paragraph 6.6.1.

CAUTION

After surface treatment and any required primer application, do not contaminate areas to be sealed with soiled hands or tools as contamination prevents proper sealing tape adhesion.

6.6.6.1 Examine faying surfaces to be sealed and build up any uneven areas on the aircraft, missile, or equipment frame flange. Use Skyflex® PN GUA-1003-1 compensation tape or a small piece of the same type of Skyflex® tape that will be used for AMS 3255 sealing tape applications and a small piece of the same type of Av-DEC™ tape that will be used for HT3935-7 and/or HT3000FR sealing tape applications. This will create a level faying surface for panel sealing.

6.6.6.2 Select the proper PN sealant tape so that it will cover the full width of the faying surface to be sealed. Tape may be applied to either the aircraft, missile, or equipment frame flange or to the panel faying surface.

a. Measure and cut the required length of sealant tape.

b. For corners, cut the ends of the tape at a 30 degree angle so that the sealant tape from the converging side will overlap by one-quarter to one-half inch. Do not fold the tape in corners as this will result in triple layer thickness.

CAUTION

Use care not to pull or stretch the sealant tape as it is applied. The stretched AMS 3255 EPTFE and Av-Dec® HT3000 tapes will retract even if clamped between faying surfaces, and the Av-Dec® HT3935-7 tapes will be reduced in thickness. In either case, inadequate sealing may result.

c. Peel the non-stick backing paper off the sealant tape a little at a time as the tape is applied to the aircraft, missile, or equipment frame flange or mating panel surface.

NOTE

- Applying a small amount of extra pressure to the upper surface of the sealant tape will cause the pressure sensitive adhesive to adhere better to the faying surface on which it is being applied, and it will create indentations/discoloration at the fastener holes allowing for easier location/identification. If done with Av-DEC® 3935-7 sealant tapes, it must be done before the non-stick backing paper is removed.
- If an AMS 3255 sealant tape without a pressure sensitive adhesive backing has been ordered for use in areas where fluid exposure is expected, 3M Co. PN Scotchgrip® 847 or 1099 plastic adhesive (refer to Appendix A) may be used to hold the sealing tape in place during panel installation.

d. After applying the full length of the sealant tape, run fingers back and forth on the upper surface of the sealant tape to press the tape against the aircraft, missile, or equipment frame flange or the access panel surface to promote adherence of the adhesive.

NOTE

For Av-Dec® HT3935-7 sealant tapes, this must be done before the non-stick backing is removed.

e. Puncture all fastener holes using an object with a sharp point such as an awl or a scribe.

NOTE

As fasteners are installed, the sealant material pushed into the fastener holes will help to seal against moisture intrusion.

f. Install the access door/panel.

NOTE

No curing time is required. All fasteners should be wet installed with MIL-PRF-16173, Grade 4; MIL-L-63460 CPC material specified in the specific aircraft, missile, or equipment system peculiar maintenance manual.

6.7 SEALING OF SPECIFIC AREAS.

6.7.1 Faying Surface Sealing. Faying surfaces are sealed by applying sealants to the connecting surfaces of two or more parts (refer to Figure 6-9). It is a very effective seal and should be used for all assembly or reassembly. When possible, it should be used in conjunction with fillet sealing. There are two types of faying surface seals: removable and permanent. Removable seals are used around access doors, removable panels, inspection plates, etc. A removable seal can be formed using a low adhesion sealant that adheres to both surfaces, or by using a high adhesion sealant that adheres to one surface and a parting agent on the mating surface. Permanent seals are created using high adhesion sealants between permanently fastened structures. To create a permanent seal, coat either one or both mating surfaces with a high adhesion sealant before assembling the parts and then assembling them while the sealant is still wet. Apply enough sealant to force a bead to squeeze out along the joint after assembly, and also install all fasteners wet with the sealant. Assemble parts within the rated application life and/or assembly life of the sealant while taking into account the effects of temperature and humidity on these times.

6.7.1.1 For permanent structure, all faying surfaces, seams, and lap joints outside of fuel wet and high temperature areas shall be protected with MIL-PRF-81733, Type II or IV, Class 1 or 2, Grade A sealant. Apply the sealing compound to one or both surfaces and squeeze the part together to ensure the complete coating of the entire mating or faying surface. Excess material squeezed out shall be removed so that the fillet remains at the joint edges. The fillet width shall not be less that ¼ inch. For seams, the sealant shall fill the seam entirely up to flush with the surface. Joint, joggle, or cavity areas which could hold water shall be filled with MIL-PRF-81733, Type II, Class 1 or 2, Grade A, SAE AMS-S-8802, Class B, or SAE AMS-3276, Class B sealant. a.

6.7.1.2 If sealing is impossible because of mechanical or other factors, prime both surfaces with two coats of MIL-PRF-23377, Type I, Class C epoxy primer or TT-P-2760, Type I, Class C polyurethane primer per instructions in TO 1-1-8.

6.7.1.3 Faying surfaces that are to be adhesive bonded shall be treated and processed as specified by the approved bonding procedure in the applicable system peculiar maintenance manual.

6.7.1.4 On faying surfaces, seams, or joints which require disassembly for maintenance, either SAE AMS 3267 or PN: PR-1773 low adhesion sealant shall be used (PN: PR-1773 sealant contains non-chromate corrosion inhibitors).

NOTE

SAE AMS 3255 (Skyflex®) sealing tapes or Av-Dec® HT3935-7 and HT3000 sealing tapes may be used in lieu of the low adhesion curing type sealants in many removable joint areas requiring periodic disassembly for maintenance when approved by the aircraft SPD and/or the missile or equipment SPM.

6.7.1.5 e. On plastic components, the joints shall be suitably sealed and faired into the adjacent surfaces with MIL-PRF-81733, Type II or IV, Class 1 or 2, Grade A, SAE AMS-S-8802, Class B, or SAE AMS-3276 sealant, unless otherwise specified in the applicable system peculiar maintenance manuals, to stop the formation of pockets which will entrap moisture, dirt, etc.

NOTE

MIL-PRF-81733, Type II or IV, Class 1 or 2, Grade A sealant shall be used for rivets that require wet installation on plastic components.

6.7.2 Fillet Sealing. The fillet, or seam, as shown in Figure 6-10, is the most common type found on an aircraft, missile, or piece of equipment. Fillet seals are used to cover structural joints or seams along stiffeners, skin butts, walls, spars, and longerons, and to seal around fittings and fasteners. This type of sealing is the most easily repaired. It should be used in conjunction with faying surface sealing and in place of it if the assembly sequence restricts the use of faying surface sealing.

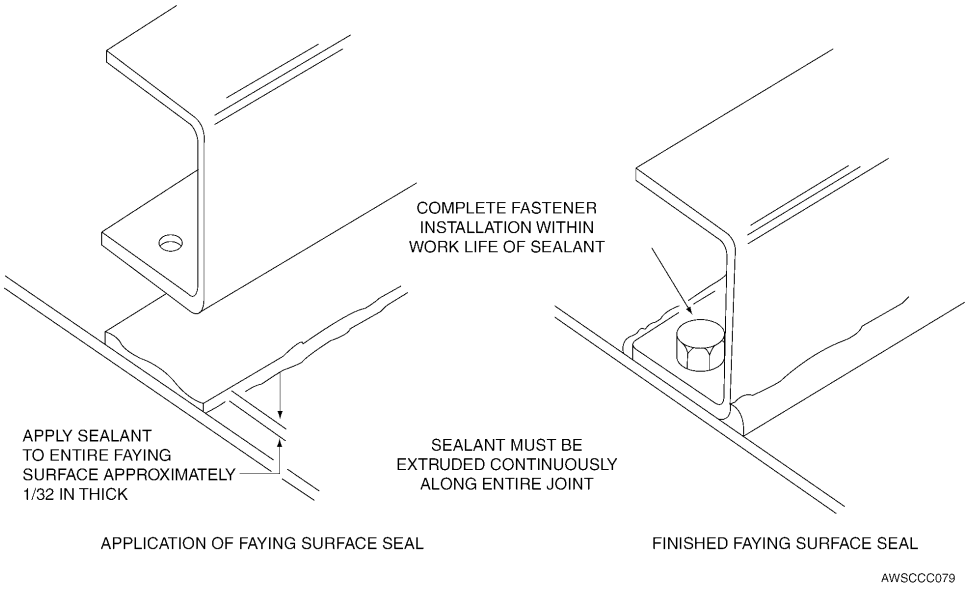

Figure 6-9. Faying Surface Sealing

6.7.3 Injection Sealing. This type of seal, as shown in Figure 6-11, is used primarily to fill voids created by structural joggles, gaps, and openings. Use only those sealants recommended by the aircraft, missile, or equipment manufacturer. Force sealant into the areas using a sealant gun. This method is a means of producing a continuous seal where it becomes impossible to lay down a continuous bead of sealant while fillet sealing. Clean the voids of all dirt, chips, burrs, grease, and oil before injection sealing.

6.7.4 Fastener Sealing. Figure 6-12 illustrates techniques used to seal different types of fasteners. Fasteners are sealed either during assembly or after assembly. Install them

wet with sealant in accordance with requirements in the applicable system peculiar maintenance manual for fasteners in permanent structures. To seal during assembly, apply the sealant to the hole or dip the fastener into sealant, and install fastener while sealant is wet. For removable parts, coat the lower side of the fastener head only. Do not coat the hole or the fastener shank or threads, as this makes future removal almost impossible without damage to the part. To seal after assembly, cover the pressure side of the fastener with sealant after installation. Corrosion damaged areas in the countersinks around removable and fixed fasteners may be filled with the fastener in place. Cadmium coated fasteners that have been blasted or abraded during corrosion removal shall be primed in accordance with the applicable system peculiar maintenance manual and TO 1-1-8 and then coated with MIL-PRF-81733, Type I, Class 1 or 2, Grade A sealant.

6.7.5 Integral Fuel Cells/Tanks and Removable Fuel Tanks. Refer TO 1-1-3 and/or the aircraft's system peculiar maintenance manual for fuel area sealing procedures.

6.7.6 Form-In-Place (FIP) Gasket Sealant Repair. After removal of all loose sealant material, thoroughly clean the area to be re-sealed per Paragraph 6.6.1. Areas of the old seal to which new sealant will be added must be cleaned and abraded using an abrasive mat or abrasive cloth (refer to Appendix A) to expose a clean, fresh surface.

a. Apply MIL-PRF-81733, Type II-½, Class I, Grade A; PR-1773, Class B-½; or SAE AMS-3276, Class B-½ sealant, preferably with a sealant gun. The new sealant should match the configuration of the removed sealant but should be of sufficient depth to ensure contact with the mating surface.

b. Apply a very thin film of MIL-PRF-32033 (VV-L-800) oil or VV-P-236 petrolatum to the mating surface of the access door/panel and close and/or install the access door/panel. If installed with fasteners, lubricate them with the same material used on the door/panel mating surface, install ½ of the required fasteners (every other fastener), and torque to ½ to ¾ of the specified torque for the assembly.

c. Do not open or remove the door/panel for a minimum of 24 hours.

NOTE

The main function of the pressure sensitive adhesive backing on the SAE AMS 3255 (Skyflex®) sealant tape is to hold the EPTFE sealant tape in place during access door/panel assembly. The adhesive on one side of the Av-Dec® HT3000 sealant tape acts as a seal as well as holding the sealant tape in place. Peeling/delamination of the adhesive from the aircraft, missile, or equipment frame flange or access door/panel requires replacement of the sealant tape if the tape is no longer located in the faying surface. Visually inspect sealant tape material for nicks, cuts, gouges and delamination/separation.

6.7.7 SAE AMS 3255 EPTFE (Skyflex®) and Av-Dec® TF3000 and TF3935-7 Sealing Tape Gasket Repair. In order to preserve seal integrity, it is necessary to inspect the sealant tape each time an access panel is removed.

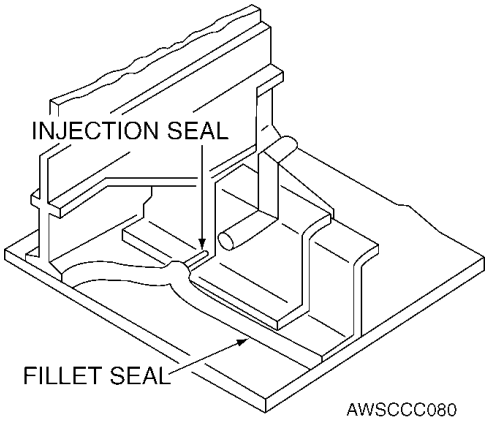

Figure 6-10. Typical Fillet Seal

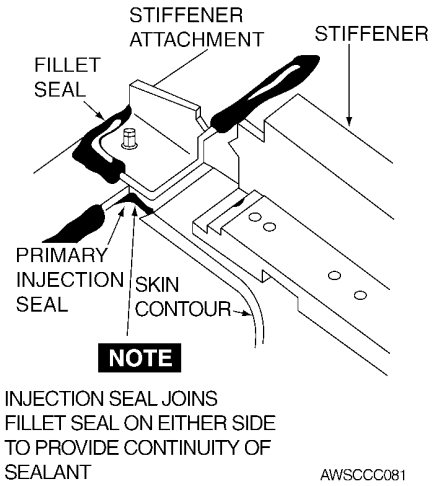

Figure 6-11. Typical Injection Seal

NOTE

Av-Dec® HT3935-7 sealing tape requires complete replacement each time an access door/panel sealed with it is removed as it has an adhesive on both sides. Scrape the old tape off with a plastic tool, and apply a new length of tape as done originally.

a. Cut and remove damaged section of sealant tape.

b. Measure and cut a new piece of SAE AMS 3255 (Skyflex®) or Av-Dec® HT3000 sealant tape approximately one inch longer than the removed section.

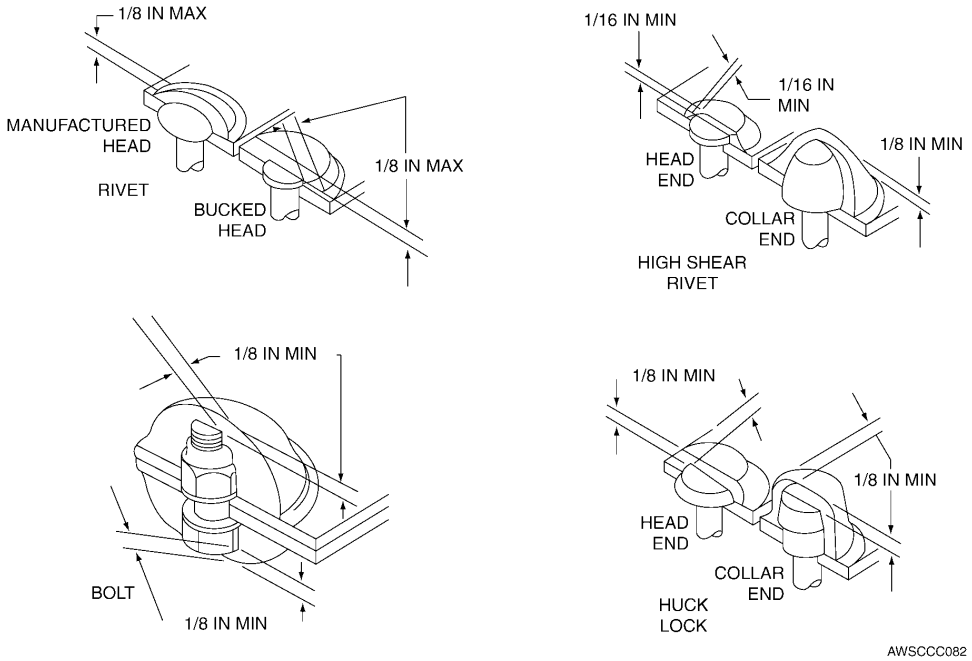

Figure 6-12. Typical Methods of Sealing Fasteners

c. Peel the non-stick backing paper off and install a new section of sealant tape so it overlaps the previously installed sealant tape by one-quarter to one-half of an inch on each side of the repair site.

NOTE

Ends of the repair splice must overlap the existing sealant tape to ensure seal integrity. Use care not to pull or stretch the sealant tape patch as it is applied. The stretched AMS 3255 EPTFE and Av-Dec® HT3000 sealant tape patches will retract even if clamped between faying surfaces, and inadequate sealing may result.

d. Once the sealant tape patch is applied, run fingers back and forth on the upper surface of the sealant tape patch to promote adherence of the adhesive. d.

NOTE

Applying a small amount of extra pressure to the upper surface of the sealant tape patch will cause the pressure sensitive adhesive to adhere better to the faying surface and overlapped areas of old sealant tape and it will create indentations/discoloration at the fastener holes allowing for easier location/identification.

e. Puncture any affected fastener holes with a sharp pointed object such as an awl or a scribe.

NOTE

As fasteners are installed, the sealant material pushed into the fastener holes will help seal against moisture intrusion.

f. Install access panel.

NOTE

No curing time is required. All fasteners should be wet installed with MIL-PRF- 16173, Grade 4 CPC; MIL-L-63460 CPC; or CPC material specified in the specific aircraft, missile, or equipment system peculiar maintenance manual.

6.7.8 External Aircraft Structure. If, during normal maintenance, it becomes necessary to remove and replace components (wing planks, skin, spar caps, fasteners, fittings, etc.), they shall be sealed when reinstalled, even if they were not sealed originally. The only exception to this requirement is a temporary repair accomplished for a one time flight to a depot or overhaul facility. Refer to Figure 6-13 through Figure 6-16 for typical sealing methods.

6.7.9 Depressions. When the thickness of metal is reduced by more than 15 mils (0.015 in) in the removal of corrosion damage, fill the depression with MIL-PRF-81733, Type II, Class 1 or 2, Grade A sealant after applying a chemical conversion treatment per Section II of Chapter 5.

NOTE

The above procedure does not apply to the use of SAE AMS 3255 EPTFE and Av-Dec® HT3935-7 or HT3000 sealing tapes; or to the use of SAE AMS-S-8802 (MIL-S-8802) sealant inside integral fuel tanks

6.7.10 Damaged Sealant. Many areas on aircraft, missiles, and equipment are sealed either at the factory or by depots during rework. Fresh sealant shall be applied whenever the previously applied sealant is damaged. Remove the damaged sealant with a plastic scraper and, if necessary, prepare the metal surface in accordance with Section II of Chapter 5. Slightly roughen a strip of the undamaged sealant approximately one inch wide around the boundary of the stripped area with an A-A-58054, Type I, Grade C abrasive mat and then clean the area per Paragraph 6.6.1. Apply the new sealant by brush, sealant gun, or spatula and then smooth out the surface with a spatula as required. The new sealant should overlap onto the roughened area of the old sealant

NOTE

- To assist with removal of damaged sealant, a liquid product known as Sky Restore® distributed by AeroSafe Products Inc. (refer to Appendix A) may be applied to the damaged area with a non-metallic bristle brush, an SAE AMS 3819A, Class 2, Grade A or equivalent cleaning cloth, or a pump spray bottle and allowed to dwell for 15 to 50 minutes until the sealant is softened. A plastic scrapper may then be used to remove the damaged sealant. This material has a fairly obnoxious odor so it must be used either in a well ventilated area or personnel must wear an appropriate respirator in all confined areas.
- After the damaged sealant is scrapped away, the area must be neutralized and cleaned with a liquid product known as Sky Wash® distributed by AeroSafe Products Inc. (refer to Appendix A) applied in the same manner as above, scrubbed with the same type of brush or cloth as used above, and wiped dry
- Other tools useful for sealant removal are the 3M Co. SR Radial Bristle Discs and plastic SR Cutters mounted on a pneumatic drill motor and the Kell-Strom Toll Co. OZ7000 pneumatic sealant removal kit; a vibro gun with a set of plastic scrapers and OZ7006 manual sealant removal kit; or a rubber palm support handle with a set of plastic scrapers. (refer to appendix B).

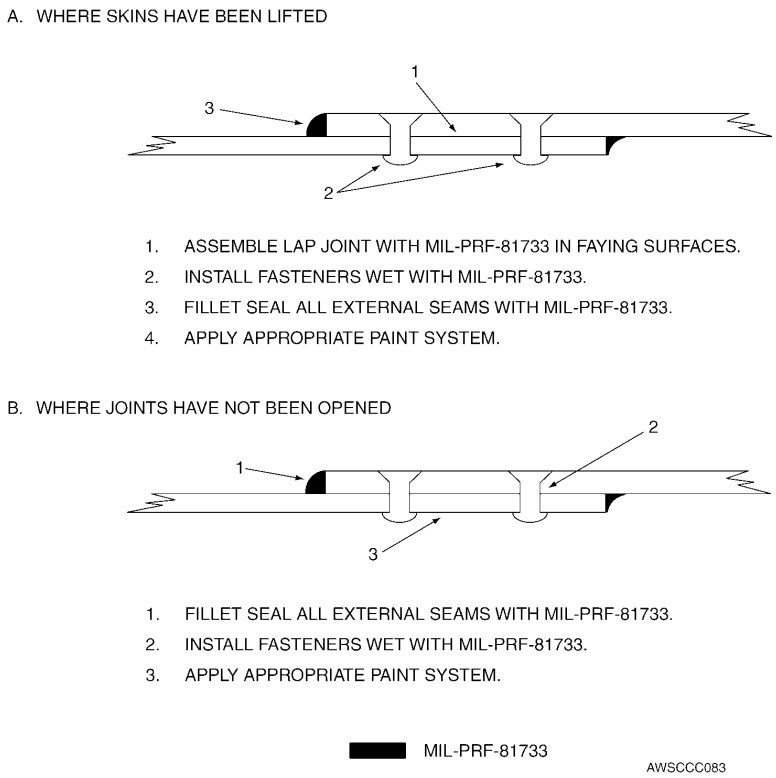

Figure 6-13. Typical Lap Skin Sealing

6.7.11 Extensive Repair. If corrosion damage is so extensive that structural repair is necessary, all faying surfaces between patches (or doublers) and skins shall receive a surface treatment per Section II of Chapter 5 before the repair parts are installed. Coat the faying surfaces with MIL-PRF-81733, Type IV, Class 1 or 2, Grade A sealant prior to installation of patch, and install all fasteners wet with MIL-PRF-81733, Type I or IV, Class 1 or 2, Grade A sealant.

6.7.12 High Temperature Areas. In areas where the temperature is expected to rise above 250° F (121° C), a one-part silicone sealant, MIL-A-46146, Type I or III, or SAE AMS 3374, Type 1, 2, 3, or 4 silicone sealant should be used for temperatures up to +400° F (+204° C). SAE AMS 3276 (MIL-S-83430) sealant may be used in areas that experience intermittent temperatures up to +360° F (+182° C). Application of these sealants is by spatula or sealant (caulking) gun per Paragraph 6.6.4.

6.7.13 Low Temperature Curing. When cold climates interfere with sealing operations by prolonging the sealant curing reaction, use MIL-S-85420 or MIL-S-29574. For better adhesion, an adhesion promoter can be used, refer to Paragraph 6.3.3. SAE AMS 3255 EPTFE and Av-DEC™ HT3935-7 or HT3000FR sealant tape gasket materials may be used for low temperature sealing operations when specified in system peculiar technical data and/or is approved by the aircraft SPD and/or the missile or equipment SPM.

6.8 STORAGE/SHELF LIFE CONTROL OF SEALANTS.

All sealants have a specified shelf life. The date of manufacture and the shelf life are listed on each container. The shelf life is dependant on storing the sealant in its original, unopened container in an area where the temperature does not exceed 80° F (27° C). Sealants shall not be stored in areas where the temperature exceeds 80° F (27° C). Prior to use, sealant containers shall be inspected to determine if the material has exceeded its shelf life. If a sealant has exceeded its original shelf life then it shall not be used until the update testing has been performed. Sealants may be extended one-half of their original shelf life after passing the required tests. Updating may be repeated until sealant fails to pass testing. No sealant shall be used if it fails testing. Minimum update testing can be performed as follows .

a. Select one kit of sealant from each manufacturer's batch of material to be tested for updating.

b. Visually examine the content of each can in the kit. If the base polymer is lumpy or partially cured or cannot be mixed with the curing agent, dispose of the opened kit and all kits from that batch of sealant.

c. If the kit can be blended to form a homogeneous mixture, determine whether the working time is suitable

for the intended purpose by applying the mixture to a clean scrap of metal. If the working time is not acceptable, dispose of the opened kit and all others from that batch

d. If the working time is acceptable, the applied sealant shall be tested for proper cure time by periodically checking its hardness. The batch of sealant represented by applied test sealant can be extended one-half its original shelf life if it achieves approximately the same hardness as sealant from kits of another batch which are within their established shelf life.

e. This updating process may be repeated until the sealant fails to pass any of the above tests.

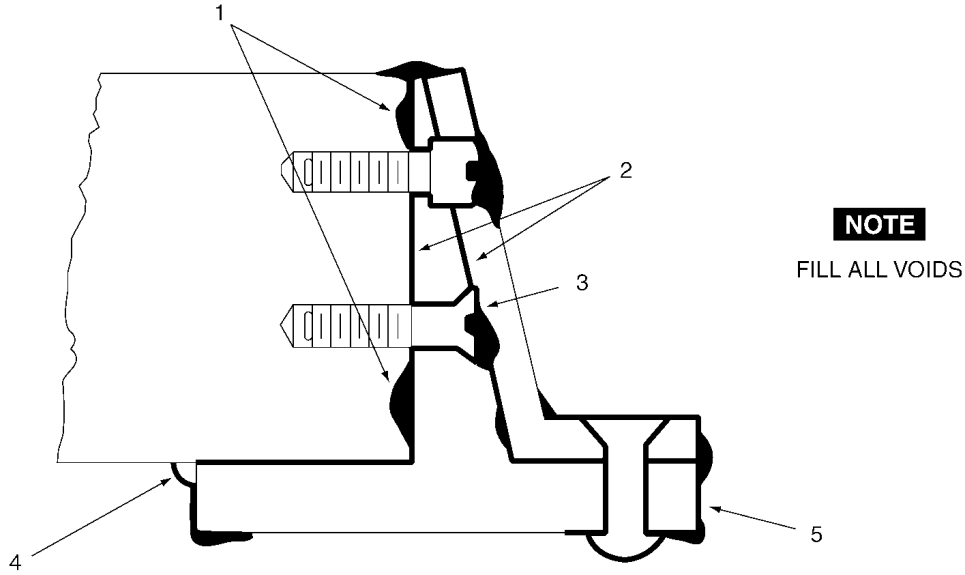

1. REMOVE CORROSION AND SURFACE TREAT IN ACCORDANCE WITH CHAPTER 5.
2. APPL MIL-PRF-81733 SEALANT TO ALL FAYING SURFACES.
3. INSTALL ALL FASTENERS WET WITH MIL-PRF-81733.
4. FILLET SEAL ALL EXTERNAL JOINTS WITH MIL-PRF-81733.
5. COAT WITH APPROPRIATE PAINT SYSTEM.

MIL-PRF-81733

AWSCCC084

Figure 6-14. Sealing Procedures for Typical Aircraft Fitting

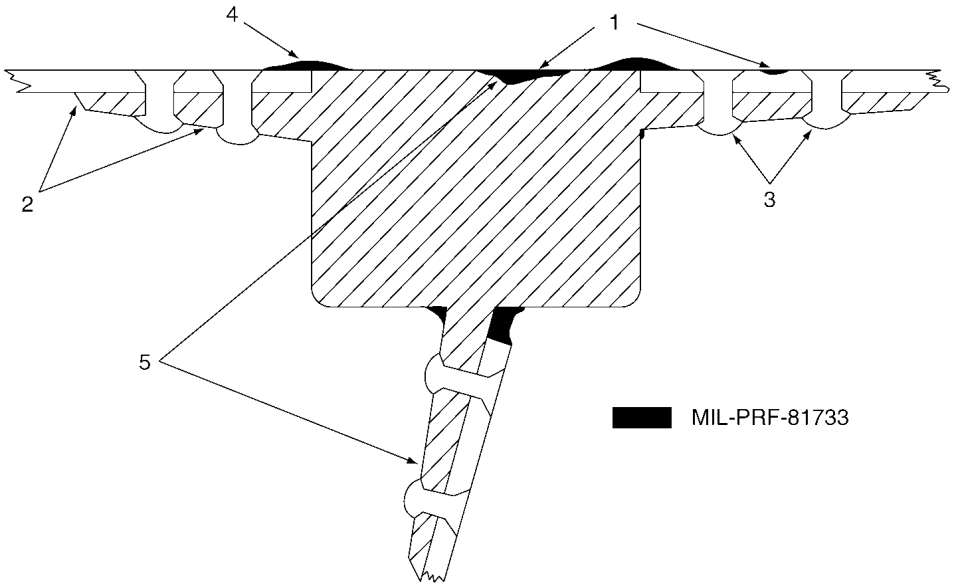

1. REMOVE CORROSION AND SURFACE TREAT IN ACCORDANCE WITH CHAPTER 5.
2. APPLY MIL-PRF-81733 SEALANT TO ALL ACCESSIBLE FAYING SURFACES.
3. INSTALL ALL FASTENERS WET WITH MIL-PRF-81733.
4. FILLET SEAL ALL EXTERNAL SEAMS WITH MIL-PRF-81733.
5. COAT ENTIRE SPAR CAP AND FASTENER AREA WITH MIL-PRF-81733, FILLING ALL DEPRESSIONS.
6. COAT WITH APPROPRIATE PAINT SYSTEM.

AWSCCC085

Figure 6-15. Typical Spar Cap Sealing

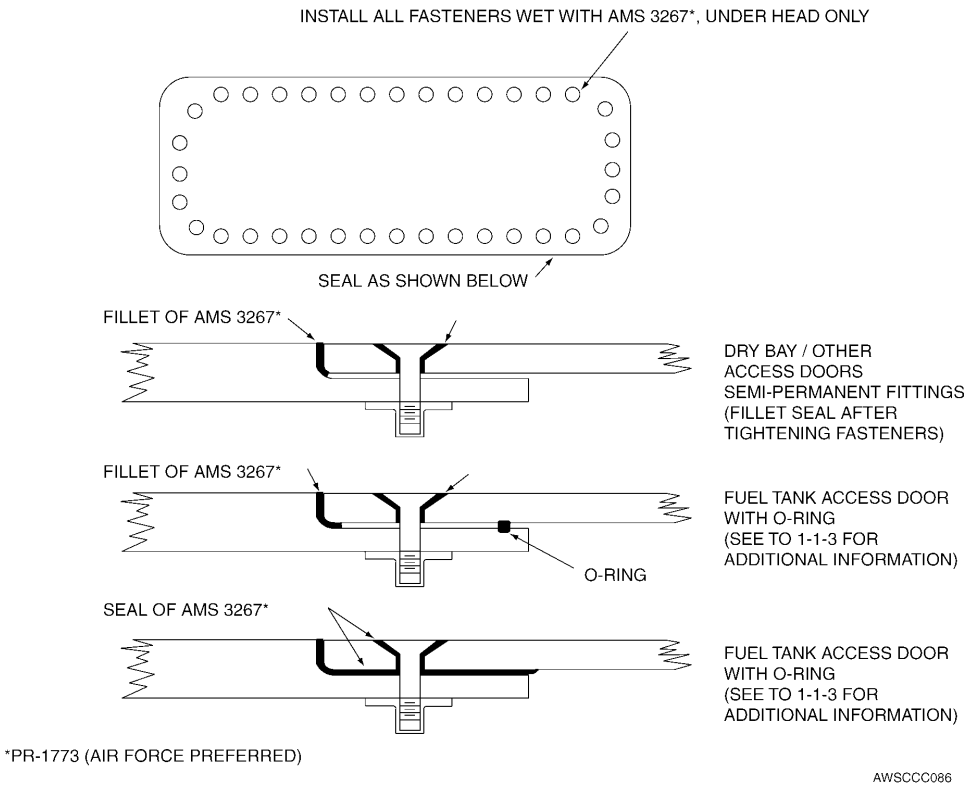

Figure 6-16. Sealing of Access Doors

CHAPTER 7
TREATMENT OF SPECIFIC AREAS

7.1 INTRODUCTION.

This chapter describes the procedures recommended for treating and protecting against corrosion in several specific areas known to be corrosion prone areas and contains illustrations to aid in inspections. This chapter is not all inclusive. Applicable system peculiar maintenance manuals for specific aircraft, missiles, and/or equipment should be consulted also to determine all corrosion prone areas on a specific system, and the required treatment and preventive measures in these areas as well as any existing expanded or amplified instructions for areas covered by this chapter.

7.2 BATTERY COMPARTMENTS, BOXES, AND ADJACENT AREAS.

WARNING

Observe precautions listed in previous chapters (or references) for cleaning compounds, solvents, surface treatments, sealants, and paints as these materials can injure personnel if used improperly.

The battery, battery cover, battery box, and adjacent areas (especially areas below the battery compartment where battery electrolyte may have seeped) are subject to the corrosive action of the battery electrolyte. Two different types of batteries are encountered on aerospace and non-aerospace equipment: lead acid, having a sulfuric acid electrolyte; and nickel-cadmium, having a potassium hydroxide electrolyte. Methods for cleaning up and neutralizing spilled and/or leaked electrolytes are given in Table 3-2.

7.2.1 Preparation of Solutions for Cleaning and Neutralizing Battery Electrolytes.

WARNING

- When handling electrolytes, chemical splash proof goggles and chemical resistant rubber gloves and aprons shall be worn. If any electrolyte contacts the skin or eyes, flood the affected area immediately with water and report to the Base Medical Facility. An emergency shower and an eye wash station in the area where work involving electrolytes is being performed are required.
- Isopropyl Alcohol (TT-I-735) is highly flammable. Use only in a well ventilated area and keep away from all sources of ignition.

CAUTION

Both sulfuric acid and potassium hydroxide battery electrolytes will cause severe corrosion of metallic structures. Avoid dripping electrolyte on or allowing contaminated gloves, rags, sponges, etc., to come in contact with aircraft, missile, or equipment structures. Place all items contaminated with electrolyte in a leak-proof plastic container prior to removing them from the area of the aircraft, missile or piece of equipment. Remove any battery box which contains spilled electrolyte from the aircraft, missile, or piece of equipment prior to cleaning it. Electrolyte spilled on aircraft, missile or equipment structure shall be cleaned up as soon as possible after it has been detected.

NOTE

The use of indicating solutions can sometimes be avoided and/or at least limited in scope by using test strips of litmus paper. When trying to initially detect electrolyte spills from acid batteries (such as lead- acid), apply a strip of blue litmus paper to the wet surface. A color change to red indicates an acid is present. When trying to detect spills from alkaline batteries (such as nickel-cadmium), apply red litmus paper to the wet surface. A color change to blue indicates an alkaline solution is present.

7.2.1.1 There are four different solutions needed for the detection, neutralization, and clean up of spilled and/or leaked battery electrolytes. Indicating solutions (litmus solution for lead acid batteries and bromothymol blue solution for nickel cadmium batteries) are required for cleaning areas subjected to electrolyte spills to determine the location of contaminated areas and to indicate if these areas have been completely neutralized. A 10% by weight sodium bicarbonate (ordinary baking soda) solution is required to neutralize sulfuric acid from lead-acid batteries and a 3% by weight boric acid or monobasic sodium phosphate solution is required to neutralize potassium hydroxide from nickel-cadmium batteries. These solutions are prepared per the following procedures:

7.2.1.1.1 Litmus Indicating Solution. Pour one pint of a mixture containing 70 percent by volume of TT-I-735 isopropyl alcohol and 30 percent by volume distilled water into a plastic spray bottle with a hand squeeze pump. Add one tablespoon of litmus powder into the solution, and mix thoroughly until a deep blue color is observed.

7.2.1.1.2 Bromothymol Blue Indicating Solution. Pour one pint of bromothymol blue solution into a plastic bottle with a hand squeeze pump. Using an eye dropper, add one drop at a time of phosphoric acid into the solution with subsequent mixing after each drop until the color of the solution changes from blue to gold or amber.

7.2.1.1.3 Sodium Bicarbonate Neutralizing Solution. Pour one pint of distilled water into a 500ml polyethylene wash bottle, add ¾ of an ounce of ASTM D928 sodium bicarbonate powder, and mix thoroughly.

7.2.1.1.4 Boric Acid and/or Monobasic Sodium Phosphate Neutralizing Solutions. Pour one pint of distilled water into a 500ml polyethylene wash bottle, add ¾ of an ounce of either A-A-59282 boric acid powder or ANSI/AWWA B504 monobasic sodium phosphate powder, and mix thoroughly.

7.2.2 Cleaning and Neutralizing Procedures.

7.2.2.1 Determine the type of electrolyte involved by dipping a small strip of blue and a small strip of red litmus papers into the liquid puddle. If the red litmus stays red and the blue litmus turns red, the liquid is acid. If the blue litmus stays blue and the red litmus turns blue, the liquid is basic or alkaline.

7.2.2.2 Remove any standing liquid or puddles with a squeeze bulb type syringe, absorbent cloth, or sponge. Place the used items in a leak proof container for disposal to prevent the contamination of other areas.

7.2.2.3 Spray the entire suspected area with the proper indicator solution, using the minimum amount needed to wet the entire surface. For spills/leaks from lead acid batteries, use the litmus solution which will change in color from deep blue to a bright red in areas contaminated by sulfuric acid. For spills/leaks from nickel-cadmium batteries, use the bromothymol blue solution which will change in color from amber or gold to a deep blue in areas contaminated by potassium hydroxide.

7.2.2.4 Apply the correct neutralizing solution to the areas where the indicating solution has been applied. For spills/leaks from lead-acid batteries, use a sodium bicarbonate solution. For spills/leaks from nickel-cadmium batteries, use either a boric acid or mono-basic sodium phosphate solution. Ensure that the area is well saturated including all seams and crevices where electrolyte could collect. Use care to prevent neutralizing solutions from spreading to adjacent areas; and on aircraft, ensure that bilge area drains are open. Allow fluids to flow overboard from these drains on aircraft. Allow the neutralizing solution to remain on the surface for at least five minutes or until all bubbling action ceases, whichever is longer.

NOTE

When neutralizing sulfuric acid, the litmus indicating solution will change back from its bright red color to a light blue as the neutral point is reached. When neutralizing potassium hydroxide, the bromothymol blue indicating solution will change back from its deep blue color to a light amber color as the neutral point is reached.

7.2.2.5 Rinse the area thoroughly with a liberal amount of clean tap water and remove any standing liquid or puddles, as specified in Paragraph 7.2.2.2.

7.2.2.6 Reapply the indicator solution, as in Paragraph 7.2.2.3. If the solution does not change color, rinse the area, as in Paragraph 7.2.2.5, and dry the area with clean cloths or rags. If the solution changes color, repeat Paragraph 7.2.2.4 and Paragraph 7.2.2.5.

7.2.2.7 Remove any corrosion noted per procedures in Section I of Chapter 5, apply conversation coating treatment per procedures in Section II of Chapter 5, apply sealant specified by the applicable system peculiar maintenance manual and Chapter 6 using procedures in Chapter 6, and apply primer and paint coatings per the applicable system peculiar maintenance manual using procedures in TO 1-1-8 if bare metal is exposed. If bare metal was not exposed, or when the paint system applied is cured to a tack free state, apply a protective film of either MIL-C-81309, Type II, or MIL-L-87177, Type I or II, Grade B CPC to the area.

7.2.3 Paint Systems. Special acid and/or alkali resistant coatings are usually required for battery compartments, boxes, and areas. Refer to the applicable system peculiar aircraft, missile, or equipment maintenance manual for the specific paint system requirements.

7.3 RELIEF TUBE AREAS.

WARNING

O-D-1435 disinfectant solutions are highly alkaline and can burn the eyes and the skin. Wear chemical resistant splash proof goggles and/or face shield and chemical resistant rubber gloves when using these solutions.

Interior and exterior relief tube areas shall be inspected and cleaned after each flight. Cleaning shall be accomplished by procedures outlined in Chapter 3. After cleaning, the exposed areas shall be disinfected by wiping down with a cloth wetted with an O-D-1435 disinfectant solution prepared per the manufacturer's instructions. The interior of the tubes shall be

disinfected by pouring the solution through them. Rinse the disinfectant solution from the area with fresh tap water, and wipe dry with a clean, dry cloth. After cleaning and disinfecting, remove any corrosion noted per procedures in Section I of Chapter 5. For areas having exposed bare metal, apply the type of conversion coating material required for the specific metal alloy involved per procedures in Section II of Chapter 5. Touch up the paint system in the area as required with the primer and topcoat specified in the applicable system peculiar maintenance manual with application per procedures in TO 1-1-8.

7.4 CORROSION TREATMENT FOR STEEL CABLES.

CAUTION

- Consult the applicable system peculiar maintenance manual for cable detensioning and tensioning requirements prior to performing any maintenance.
- Do not use metallic wools to clean installed steel control cables. The use of metallic wool will cause dissimilar metal particles to become embedded in the cables and create further corrosion problems (galvanic corrosion). Use only a clean cloth dampened with A-A-59601, Type II or III, or MIL-PRF-680, Type II or III degreasing solvent to clean steel control cables. Excessive solvent will remove internal cable lubricant and allow the cable strands to abrade and further corrode.

If the surface of a cable is corroded, relieve cable tension and carefully force the cable open by reverse twisting. Visually inspect the interior. Corrosion on the interior strands constitutes failure, and the cable must be replaced. If no internal corrosion is detected, remove loose external rust and corrosion with a clean, dry, coarse-weave rag or fiber brush. Clean the control cables with a clean cloth dampened with A-A-59601, Type II or III, or MIL-PRF-680, Type II or III degreasing solvent. After thorough cleaning, apply a thin film of either MIL-C- 81309, Type II; MIL-L-87177, Type I or II, Grade B; or MIL-PRF-16173, Class II, Grade 3 water displacing CPC to the cable surface by aerosol spray or a cloth dampened with the CPC followed by a liberal application of MIL-PRF-16173, Class II, Grade 4 CPC with a non-metallic brush. Wipe off any excess CPC. If excessive CPC is allowed to build up, it will interfere with the operation of cables at fairleads, pulleys, or grooved bell-crank areas.

7.5 PIANO TYPE HINGES.

Corrosion inhibiting solid film lubricants are often applied to hinge pins and nodes to provide lubrication and to reduce corrosion problems. Refer to Section II of Chapter 3 for procedures on touch-up and replacement of these lubricants when hinges are disassembled. Each time an aircraft, missile or piece of equipment is washed, make sure that all hinges are cleaned in accordance with Chapter 3. After washing, apply a coating of a water displacing CPC. Use either MIL-L-63460, or MIL-C-81309 Type II, or MIL-L-87177, Type I or II, Grade B followed by MIL-PRF-32033 (VV-L-800) to the node and hinge pin areas of all piano hinges including those coated with solid film lubricants.

7.6 INTEGRAL AND EXTERNAL FUEL TANKS AND DROP TANKS.

For additional instructions on materials and procedures used in aircraft fuel tank areas, refer to TO 1-1-3.

7.6.1 Corrosion Removal and Rework of Pitted Areas of Integral Fuel Tanks. Complete removal of corrosion products is required to prevent recurrence of corrosion in the affected areas.

WARNING

Power abrasive removal operations create airborne particles. Eye protection is required. Good general ventilation is normally adequate.

7.6.1.1 Remove corrosion by mechanical methods in Section I of Chapter 5 using materials and procedures listed there for aluminum alloys, except that abrasive blasting shall not be used. In general, a power driven abrasive on a flexible shaft is the most effective means of corrosion removal in this area. Corrosion removal shall be followed by hand sanding with 280 grit abrasive paper or cloth followed by 400 grit abrasive paper or cloth to produce a smooth surface finish. The system peculiar aircraft -3 and -23 manuals shall be consulted to assure structural limits are not exceeded.

WARNING

To prevent injury to personnel, exercise caution when using sharp or pointed tools.

7.6.1.2 After sanding operations are completed, clean abrasive residue off reworked areas with a clean cloth, and inspect for small shiny patches which appear much brighter than the base metal. These generally indicate exfoliation underneath the exposed shiny surface below a blister from which the top has been partially removed. As the surface is being sanded during rework, these blisters, being high points, receive most of the abrasive action, leaving the blister area much brighter than the surrounding base metal. To completely remove this corrosion, the blisters must be broken open to fully expose the exfoliation and powdery corrosion deposits underneath. It is usually much faster and easier to pry the top off the blister with a sharp instrument. This operation requires extreme caution to prevent unnecessary gouges or scratches in the base metal. Pitted and exfoliated areas must be reworked to a depth sufficient to remove all the

corrosion and the resulting depression must be blended into the surrounding surface. All loosened material must be removed from the fuel tank by vacuuming prior to further treatment.

7.6.1.3 Abrade the bare metal reworked area to remove the oxide film which forms on it and the surface of the SAE AMS-C-27725 (MIL-C-27725) fuel tank coating adjacent to the reworked areas to remove the gloss from it with A-A-58054, Type I, Grade A abrasive mat.

WARNING

A-A-59281 (MIL-C-38736) solvents are flammable and toxic to skin, eyes, and respiratory tract. Chemical resistant splash proof goggles and/or face shield and chemical resistant rubber gloves are required. Respirators are required when using this solvent in enclosed areas.

7.6.1.4 Clean the areas thoroughly to remove all residue, oil, and grease with a clean, lint free cloth conforming to either A-A-2522, Grade A, Color 1; CCC-C-440, Type I or II; or SAE AMS 3819A, Class 2, Grade A wetted with A-A-59281, Type I (MIL-C-38736, Type I) solvent. Do not allow solvent to dry by evaporation; wipe the area dry with a clean cloth to prevent redepositing the soils on the surface.

7.6.1.5 Apply MIL-C-5541/MIL-C-81706, Class 1 A, conversion coating to the reworked area per Section II of Chapter 5.

WARNING

PR-148 adhesion promoter is flammable and toxic to skin, eyes, and respiratory tract. Chemical or splash proof goggles and rubber gloves are required. Respirators are required when using this material in enclosed areas.

7.6.1.6 Apply PR-148 (PRC-DeSoto Int. Corp.) adhesion promoter to the reworked area and the dulled area of the coating around the reworked area, and allow it to dry for 30 minutes minimum to 2 hours maximum.

WARNING

MIL-PRF-81733 sealants are moderately toxic to skin and body (if ingested). Wear chemical resistant gloves and avoid other skin contact. Wash hands thoroughly before eating, drinking, or smoking after using these sealants.

7.6.1.7 Using an acid brush which has had the bristles clipped off to half their original length, scrub MIL-PRF-81733, Type I or II sealant onto the reworked area while making sure the sealant wets the entire area and overlaps slightly on to the dulled area of the coating around the reworked area. Add more sealant with the brush until a slight mound is formed and smooth the surface with the brush.

7.6.1.8 Replace any fillet or brush coat sealant removed to facilitate rework of a corroded area per instructions in TO 1-1-3.

WARNING

Polyurethane coatings are flammable and toxic to the skin, eyes, and respiratory tract. Chemical resistant splash proof goggles and/or face shield, chemical resistant rubber gloves, and an organic vapor face mask are required. Avoid all skin contact. Exhaust ventilation is required when using this material in enclosed spaces/areas. Keep all open flames and any other sources of ignition away from the area in which this material is being used.

7.6.1.9 When sealant applied in Paragraph 7.6.1.7 and Paragraph 7.6.1.8. above is tack free, overcoat the sealant with a MIL-C-83019 clear flexible polyurethane coating. Overlap of this coating onto the dulled area of the SAE AMS-C-27725 (MIL-C-27725) coating around the reworked area shall not exceed ¼ inch.

7.6.2 Removal of Corrosion and Rework of Aluminum External Fuel Tanks/Drop Tanks. Complete removal of corrosion products is required to prevent recurrence of corrosion in the affected areas.

7.6.2.1 Tank Exterior Surfaces.

WARNING

Tanks which have contained fuel are hazardous until all vapors and residual fuel deposits have been removed. They are potential explosion and health hazards and should be treated as such. Refer to TO 1-1-3 for proper purging procedures.

Remove corrosion from these surfaces and rework the area per the following procedure:

a. If painted, remove paint from area where corrosion is suspected per instructions in TO 1-1-8 such that a margin of good metal around the suspected area is exposed.

b. Remove and treat corrosion using an appropriate mechanical method in Section I of Chapter 5.

c. Apply MIL-C-5441/MIL-C-81706, Class 1A conversion coating to bare metal areas per procedures in Section II of Chapter 5.

d. Touch up area from which paint was removed per instructions in the applicable system peculiar -23 aircraft technical order using procedures in TO 1-1-8.

7.6.2.2 Tank Interior Surfaces. Remove corrosion from these surfaces and rework the area per the following procedure:

NOTE

The interior surface of aluminum alloy tanks shall not be painted.

7.6.2.2.1 If a preservative mixture is present, remove it only from the immediate area requiring corrosion removal and treatment. Mix 1 part MIL-C-87937, Type IV cleaner with 9 parts fresh tap water by volume. Apply the cleaner solution to the area with a sponge, soft brush, or cloth. Scrub the area thoroughly, remove preservative, and rinse with fresh tap water. Use a clean, dry, lint free cloth to dry the area.

7.6.2.2.2 Remove and treat corrosion using an appropriate mechanical method in Section I of Chapter 5, except abrasive blasting shall not be used.

7.6.2.2.3 Apply MIL-C-5541/MIL-C-81706, Class 1A conversion coating to bare metal areas per procedures in Section II of Chapter 5.

7.6.2.2.4 Per direction of TO 00-85A-03-1, preserve the interior of assembled tanks by fogging with preservative or applying it with a clean, lint free cloth soaked in a preservative solution. The preservative solution shall consist of one part of MIL-C-6529, Type 1 CPC and three parts of MIL-PRF-6081, Grade 1010 oil. If spraying the preservative to protect the entire tank interior, spray with a pressure spray that provides complete atomization, and vent the tank at the farthest practicable distance from the introduction point of the oil mixture during spraying operations. The amount of preservative shall be a minimum of 0.12 cc per square foot of internal surface.

NOTE

- Tanks containing foam baffling shall not be preserved.
- This preservative compound is compatible with gasoline and jet type fuels, so it need not be removed before placing tank in service.

7.7 FAYING SURFACES AND ATTACHMENT POINTS.

NOTE

Treat and process faying surfaces of parts, components, or structures which are assembled by adhesive bonding in accordance with the applicable system peculiar aircraft, missile, or equipment maintenance manual that covers adhesive bonding.

7.7.1 Faying Surfaces, Joints, and Seams. When repairs are made on equipment or accessories and/or components are installed or structures are reinstalled, the attaching or faying surfaces shall be protected by sealing all metal to metal and composite to metal contact surfaces. All permanent structures shall be installed with faying surfaces wet with MIL-PRF-81733, Type I or IV, Class 1 or 2, Grade A sealant. All removable structures such as access doors, inspection plates, floor panels and plates, and other removable panels (components requiring frequent removal for maintenance requirements) shall either be installed with faying surfaces wet with AMS 3367, Class A or B, or PR-1773, Class B sealant or with SAE AMS 3255 (Skyflex®) or Av-DEC™ HT3935-7 or HT3000FR sealant tape in the joints as specified by the system peculiar maintenance manual. In addition to faying surface sealing, fillet seal all critical interior seams (those in corrosive areas such as aircraft bilges and latrines) and all exterior seams (those exposed to the outside environment) on permanent structure so that fillet is flush with the surface for butt seams and fairs smoothly into the adjoining surface for lap seams using MIL-PRF-81733, Type II, Class 1 or 2, Grade A sealant. Fillet seal all critical interior and all exterior butt and lap seams on removable structures that were faying surface sealed with SAE AMS 3367 or PR-1773 sealant in the same manner with SAE AMS 3267, Class B, or PR-1773, Class B sealant. Refer to Chapter 6 for additional details on sealant selection and application procedures. The coating system on all structures adjacent to the sealed seams and joints shall be touched up after sealant installation to match the surrounding structure in accordance with the applicable system peculiar maintenance manual with application per TO 1-1-8 procedures.

7.7.2 Attaching Parts and Hardware. Attaching parts, such as nuts (standard, speed, and self-locking), bushings, spacers, washers, screws (standard and self-tapping), sleeves for shake-proof fastener studs, clamps, bolts, etc., do not need to be painted in detail except when dissimilar metal or wood contact is involved with the materials being joined or exposure to a corrosive interior environment or the exterior environment will occur in service. However, all parts shall be installed wet with sealant. For permanent installations, use

MIL-PRF-81733, Type I or IV, Class 1 or 2, Grade A sealant and coat the entire mating surface of the parts. For removable installations, use SAE AMS 3367, Class A or PR-1773, Class B sealant and coat only the lower side of the heads of screws and bolts with sealant. For removable installations, do not coat the threads and shanks of screws and bolts or the holes into which they are inserted because this will make future removal almost impossible without damaging the parts. As an alternate for removable installations, the shanks, threads, and lower side of the heads of standard screws and bolts may be coated with MIL-L-63460; MIL-PRF-16173, Class II, Grade 3; or MIL-PRF-32033 (VV-P-800) CPC before they are installed. Close tolerance bolts and parts shall be coated with corrosion inhibiting, solid film lubricant. Use SAE AS5272 (MIL-L-46010, heat curing type) on non-aluminum parts when 400° F (205° C) ovens are available. Use MIL-L-23398 or MIL-PRF-46147 (air curing type) on aluminum parts and on all types of metallic parts when 400° F (205° C) ovens are unavailable. The solid film lubricant shall be applied and completely cured prior to assembly (refer to Section II of Chapter 3 for application and curing procedures). Bolts shall be coated on shanks and threads only. A thin bead of sealant shall be applied under the bolt head to impart a wet seal. If possible, bolt head, nut, and bolt end shall be fillet sealed after installation. MIL-PRF- 81733, Type II, Class 1 or 2, Grade A shall be used for sealing.

NOTE

The following does not apply to parts which are lubricated in the joint areas immediately before or after installation, or to close tolerance bolts and parts which are removed frequently for maintenance requirements.

7.7.2.1 All rivets shall be installed wet with MIL-PRF-81733, Type I or IV, Class 1 or 2, Grade A sealant. In fuel contact areas, the exposed rivet head and approximately ¼ in of the adjacent structure shall be brush-over-coated with SAE AMS-S-8802 (MIL-S-8802), Class A sealant.

7.7.2.2 All machine screws, countersunk fasteners, bolts (head end), and nuts which are used in contact with magnesium shall be installed with 5056 aluminum alloy washers. These parts, including the washers, shall be installed wet with MIL-PRF-81733, Type II, Class 1, Grade A sealant and shall be completely fillet sealed with the same material after installation.

7.7.2.3 Adjustable parts, such as tie rod ends and turnbuckles shall be installed as follows:

7.7.2.3.1 If possible, surfaces and threads shall be lubricated and protected before assembly with a film of SAE AS5272 (MIL-L-46010, heat curing type) or MIL-L-23398 or MIL-PRF-46147 (air curing type) corrosion inhibiting, solid film lubricant which shall be completely cured prior to assembly (refer to Section II of Chapter 3 for application and curing procedures). After installation, apply a thin coating of DOD-L-25681 lubricant to all surfaces of these parts located in high temperature areas. Apply a thin coating of MIL-L-63460; MIL-PRF-16173, Class II, Grade 3; MIL-PRF-32033 (VV-L-800); MIL-L-81309, Type II; or MIL-L-87177, Type 1 or 2, Grade B water displacing, CPC to all surfaces of these parts located in other lower temperature areas.

7.7.2.3.2 If solid film lubricants cannot be applied, use a thin coating of DOD-L-25681 lubricant on all surfaces before and after assembly when located in high temperature areas. Apply a thin coating of MIL-L-63460; MIL-PRF-16173, Class II, Grade 3; MIL-PRF-32033 (VV-L-800); MIL-L-81309, Type II; or MIL-L-87177, Type 1 or 2, Grade B water displacing, CPC after assembly when located in other lower temperature areas.

7.7.2.4 If possible, slip fit parts shall be assembled with mating surfaces wet with MIL-PRF-81733, Type I or IV, Class 1 or 2, Grade A sealant. If not possible, coat the ID of the holes in the receiving part, which is normally the larger structure, with a corrosion inhibiting, solid film lubricant conforming to MIL-L-23398 or MIL-PRF-46147 (air curing types) and the OD of the mating part with one conforming to MIL-L-46010 (heat curing type) or one conforming to MIL-L-23398 or MIL-PRF-46147 (air curing types). The solid film lubricant shall be applied and completely cured prior to assembly (refer to Section II of Chapter 3 for application and curing procedures).

7.7.2.5 Press fit parts shall be installed with faying surfaces (the OD of the part and the ID of the hole) wet with MIL-PRF-81733, Type IV, Class 1 or 2, Grade A sealant, and the edges of these parts shall be fillet sealed with MIL-PRF-81733, Type II, Class 1 or 2, Grade A sealant after installation.

7.7.2.6 All cut edges and holes drilled or reworked for bolts, screws, rivets, studs, and bushings of aluminum alloy and magnesium alloy structures or parts shall receive a chemical conversion coating treatment prior to the installation of the fasteners or bushings and prior to installing or refinishing the structure or parts. Apply a MIL-C-5541/MIL-C-81706, Class 1A chromate conversion coating to aluminum alloy parts and SAE AMS-M-3171 (MIL-M-3171), Type VI chromic acid brush-on pretreatment to magnesium alloy parts per procedures in Section II of Chapter 5.

7.7.3 Severely Corroded (Rusted) Hardware. Severely corroded common hardware such as screws, bolts, and washers should be replaced. Economic consideration shall be given to replacement of other corroded screws, bolts, nuts, washers, etc., instead of cleaning and recoating or replating. However, major replacements should be accomplished during overhaul and/or scheduled depot maintenance. When a protective coating, such as cadmium plating on bolts, screws, etc., is damaged, immediate action shall be taken to apply an

appropriate protective finish to prevent corrosion (rusting). Refer to Section III of Chapter 3 for proper corrosion preventative materials.

7.8 NATURAL AND SYNTHETIC RUBBER PARTS.

Natural and synthetic rubber shall not be painted or oiled. As a general rule, grease should not be applied to rubber parts, but some parts, such as O rings, require a grease coating (consult the appropriate system peculiar maintenance manual). Many types of rubber are subject to fungus growth (e.g. mold, mildew) which can cause deterioration of the rubber and corrosion of surrounding metal surfaces. If fungus is noted on rubber parts, clean the parts and remove the fungus per procedures in Section I of Chapter 3.

7.9 POTABLE WATER TANKS.

The interior surface of aluminum alloy potable water tanks shall not be painted or conversion coated. Remove corrosion by using the mechanical methods outlined in Section I of Chapter 5, and ensure all debris is removed.

7.10 SURFACES AND COMPONENTS EXPOSED TO EXHAUST GASES, GUN GASES AND ROCKET BLAST.

Residues from exhaust gases, gun gases, and rocket blast are very corrosive and can cause deterioration of paint systems. Frequent cleaning of these areas to remove residue is required and shall be accomplished in accordance with Section I of Chapter 3.

7.11 ELECTRICAL AND ELECTRONIC EQUIPMENT.

Avionic and electrical equipment are easily damaged by contamination with corrosion removal debris and by application of improper corrosion control materials. Many of the conventional corrosion treatment methods used on airframe, missile, and equipment structural components are also used on areas adjacent to or supporting avionic equipment, electrical equipment, wire bundles, and other electrical parts. Personnel performing airframe corrosion control tasks on or around this equipment shall be familiar with materials and procedures used for corrosion prevention and control on electrical and electronic equipment to ensure that no damage to electrical or avionic equipment will occur. For more specific information, refer to TO 1-1-689, TO 00-25-234, TO 1-1A-14, and the specific system peculiar equipment maintenance manuals.

7.11.1 Grounding and Bonding Connections. After the grounding or bonding connection has been made, overcoat the entire connection, including all bare areas on the metal surface, with MIL-PRF-81733, Type II, Class 1 or 2, Grade A sealant.

7.11.2 Conduit and Junction Boxes. Electrical conduit (exterior) and junction boxes (interior and exterior) shall be primed with two coats of MIL-PRF-23377, Type I, Class C epoxy primer or TT-P-2760, Type I, Class C polyurethane primer applied per procedures in TO 1-1-8. If corrosion is found, remove it by mechanical methods outlined in Section I of Chapter 5. Before applying the primer, apply a MIL-C-5541/MIL-C-81706, Class 1A chromate conversion coating to aluminum alloy parts and SAE AMS-M-3171 (MIL-M-3171), Type VI chromic acid brush-on pretreatment to magnesium alloy parts per procedures in Section II of Chapter 5 to all reworked areas and any other bare metal areas.

7.11.3 Wires and Cables. Electrical wires and cables having plastic jacket insulation and/or braided wire exterior shielding shall not be painted or coated except as required for moisture and fungus proofing. Consult TO 1-1-689, TO 1-1A-14, and TO 00-25-234 for additional information.

7.11.4 Corrosion Protection for Electrical Connectors, Lead-ins, etc. Almost all corrosion problems on electrical and electronic equipment are caused by moisture intrusion at the connector or lead-in attachment points on cases and covers. While the design of this equipment is fixed, corrosion can be prevented by spraying MIL-C-81309, Type III or MIL-L-87177, Type I, Grade B avionics grade, water displacing, CPC into the pin and/or pin receptacle end of the connectors prior to mating the connector halves, and on the connector shells after mating the connector halves. Consult Section III of Chapter 3 and TO 1-1-689 for additional information.

7.11.5 Moisture and Fungus Proofing of Electrical and Electronic Equipment. Consult TO 1-1-689, TO 1-1A-14, and TO 00-25-234 for information on fungus proofing this equipment.

7.11.6 Antennas. Dissimilar metal (Galvanic) corrosion often occurs at antenna attach points. Refer to TO 1-1-689 for repair information. Refer to the system peculiar maintenance manuals for information on paint touch-up and finishing. Apply paint and coatings per procedures in TO 1-1-8.

7.12 STRUCTURAL TUBING MEMBERS AND ASSEMBLIES.

Only non-powered mechanical procedures and materials specified in Section I of Chapter 5 shall be used to remove corrosion on structural tubing. Reworked areas shall always be polished to a smooth surface, using 400 to 600 grit abrasive mat, paper, or cloth as the final step in the corrosion removal procedure. The following steps outline general practices for the protection of structural tubing:

7.12.1 Structural Aluminum Alloy Tubing. Treat and paint the exterior surfaces of all tubing and the interior surfaces of open ended tubing closed off by riveted or bolted end surfaces with the finish system designated in the applicable system peculiar maintenance manual. Apply paint per procedures in TO 1-1-8. All bolted or riveted caps or components shall be installed with faying surfaces and fasteners wet with MIL-PRF-81733, Type I or IV, Class 1 or 2, Grade A sealant. Interior surfaces of tubing closed by

welded end plugs or components shall be coated with MIL-PRF-16173, Class II, Grade 2 or 4 CPC using the fill and drain method of application through holes located near each end of the tubes. These holes shall subsequently be closed by installing blind rivets wet with MIL-PRF-81733, Type II, Class 1 or 2, Grade A sealant and overcoating the rivet head with the same material after installation.

7.12.2 Structural Magnesium Alloy Tubing. All surfaces of magnesium tubing shall be treated with a SAE AMS-M-3171 (MIL-M-3171), Type VI chromic acid brush-on pretreatment coating per procedures in Section II of Chapter 5, and painted with the finish system designated in the applicable system peculiar maintenance manual with application per procedures in TO 1-1-8. Install all parts onto the tubing with all faying surfaces and fasteners wet with MIL-PRF-81733, Type I or IV, Class 1 or 2, Grade A sealant.

7.12.3 Structural Copper Alloys, Stainless Steel (CRES) Alloys, and Heat Resistant Alloy Tubing. The interior and exterior surfaces of these types of tubing do not require a finish system. However, to prevent galvanic corrosion of other metals with which these types of tubing are in contact, install parts and attach tubing with faying surfaces and fasteners wet with MIL-PRF-81733, Type I or IV, Class 1 or 2, Grade A sealant when located in areas not exposed to high temperatures or AMS-3374, Type 1, 2, 3, or 4 sealant for high temperature areas.

7.12.4 Structural Carbon Steel Tubing.

7.12.4.1 Exterior. All exterior surfaces of steel tubing assemblies shall be finished with one coat of MIL-PRF-26915, Type I or II, Class A or B, zinc-rich primer; MIL-PRF-23377, Type I, Class C, or MIL-PRF-85582, Type I, Class C2 epoxy primer; or TT-P-2760, Type I, Class C polyurethane primer followed by two coats of MIL-PRF-85285 polyurethane topcoat with the color as specified in the applicable system peculiar maintenance manual. After corrosion (rust) is removed and before applying a primer, apply an appropriate MIL-C-10578 film per Section I of Chapter 5, or a MIL-C-8514 or DOD-P-15328 wash primer coating to bare metal areas per procedures in TO 1-1-8. Apply primer and topcoat materials per procedures in TO 1-1-8.

7.12.4.2 Interior. For tubing assemblies without welded or crimped ends, coat all interior surfaces with MIL-PRF-23377, Type I, Class C epoxy primer or MIL-PRF-26915, Type I or II, Class A or B, zinc-rich primer using a fill-and-drain procedure. Where practical, in lieu of the fill-and-drain procedure, two coats of primer may be spray applied to interior surfaces of all assemblies using a spray gun with an extension wand.

7.12.4.3 Sealing. After coating the interior, clean the exterior surfaces of all assemblies adjacent to holes in the tube walls by solvent wiping to remove any oil, grease, or other contamination. Seal all holes in tube walls by installing blind rivets in the holes wet with MIL-PRF-81733, Type II, Class 1 or 2, Grade A sealant and overcoating the rivet heads with the same material after installation. Assemble all tubing assemblies manufactured by riveting or bolting members together with fittings with faying surfaces and fasteners wet with MIL-PRF-81733, Type I or IV, Class 1 or 2, Grade A sealant.

7.13 NON-STRUCTURAL TUBING MEMBERS AND ASSEMBLIES.

Use the same procedures and materials specified for corrosion removal on structural tubing members and assemblies in Paragraph 7.12 to remove corrosion from non-structural tubing.

7.13.1 Aluminum Alloy Tubing.

WARNING

Do not use A-A-59601 and/or MIL-PRF-680 degreasing solvents or other solvents that are not oxygen compatible in areas involving oxygen storage, including transfer systems, and on the surfaces of missiles using liquid propellant. Failure to observe these precautions can result in serious or fatal injury to personnel and complete destruction of the equipment.

7.13.1.1 Protect aluminum tubing exposed directly to the outside environment during either flight or ground operations by applying the exterior finish system specified in the applicable system peculiar maintenance manual with application per procedures in TO 1-1-8. Treat aluminum tubing according to the following procedure: Clean in accordance with Section I of Chapter 3. Remove corrosion in accordance with Paragraph 7.12, using non-powered mechanical methods specified in Section I of Chapter 5.

7.13.1.1.1 Apply a MIL-C-81706, Class 1A chemical chromate conversion coating to all interior and exterior surfaces of tubing per procedures in Section II of Chapter 5; except coat only the exterior surfaces of oxygen lines. For new tubes, apply conversion coating to the entire tube after fabrication and prior to the installation. If corrosion has been removed from tubing, apply conversion coating to all bare, reworked areas.

CAUTION

No paint or corrosion preventive compound shall be applied to any tubular interior surface. Take necessary precautions to prevent primer or paint from entering the interior areas of tubing. Where double flares are used (e.g., on oxygen systems), cap the ends and apply the finish system after the flaring operation. Paint end fittings after installation on the aircraft, missile, or equipment. Use extreme care to prevent contamination of interior surfaces of hydraulic, oxygen, and air speed indicator tubing during painting operations.

7.13.1.1.2 No paint or corrosion preventive compound shall be applied to any interior surfaces of non-structural tubing. Apply the specified exterior finish system to all exterior surfaces or reworked areas of tubing exposed to the environment in the same sequence given above for structural aluminum tubing. Touch-up any coating systems damaged during tubing installation with the coating system specified in the system peculiar maintenance manual with application per procedures in TO 1-1-8.

7.13.2 Stainless Steel (CRES) Tubing.

WARNING

- Do not use A-A-59601 or MIL-PRF-680 degreasing solvents or other solvents that are not oxygen compatible in areas involving oxygen storage, including transfer systems, and on the surfaces of missiles using liquid propellant. Failure to observe these precautions can result in serious or fatal injury to personnel and complete destruction of the equipment
- SAE AMS 3166 wipe solvent is flammable and toxic to the skin, eyes, and respiratory tract. Eye and skin protection is required. Use only in a well ventilated area.
- Apply a small amount of AMS 3166 solvent to a clean cloth and wipe the surface. Follow by wiping with a clean cloth or dry rag. This minimizes the amount of solvent used as well as preventing redepositing contamination on the surface.
- To control solvent odor, used rags should be immediately placed in sealed plastic bags or covered containers and disposed of in accordance with local directives.

7.13.2.1 Protect stainless (CRES) steel tubing exposed directly to the outside environment, either during flight or ground operations, by applying the exterior finish specified in the applicable system peculiar maintenance manual with application per procedures in TO 1-1-8. Austenitic (3XX series) stainless (CRES) steels are highly susceptible to pitting, crevice corrosion, and stress corrosion cracking when exposed to moist, salt-laden air and when deposits of dirt and debris are allowed to collect on areas of the tubing covered by metal brackets or parts. Treat stainless steel (CRES) tubing according to the following procedures:

a. Clean in accordance with Section I of Chapter 3.

b. Remove corrosion in accordance with Paragraph 7.12, using non-powered mechanical methods specified in Section I of Chapter 5.

c. Immediately before painting, wipe areas which will be painted with a lint free cloth moistened with SAE AMS 3166 wipe solvent; and dry with a clean cloth. Do not allow drying by evaporation, since soils will redeposit on the surface.

d. Apply the finish system specified for stainless steel (CRES) tubing in the system peculiar technical manuals per TO 1-1-8 procedures.

7.13.3 Cadmium Plated Steel Tubing.

WARNING

- SAE AMS 3166 wipe solvent is flammable and toxic to the skin, eyes, and respiratory tract. Eye and skin protection is required. Use only in a well ventilated area.
- Apply a small amount of AMS 3166 solvent to a clean cloth and wipe the surface. Follow by wiping with a clean cloth or dry rag. This will minimize the amount of solvent used as well as preventing redepositing contamination on the surface.
- To control solvent odor, used rags should be immediately placed in sealed plastic bags or covered containers and disposed in accordance with local directives.

7.13.3.1 Bare cadmium plating deteriorates rapidly when subjected to abrasion, most bases (alkalis) and acids, and marine, industrial, and very humid environments. It should always be protected with a paint system to prevent corrosion. Treat cadmium plated steel tubing in accordance with the following procedure:

a. Clean in accordance with Section I of Chapter 3.

b. Remove deteriorated plating and corrosion on base metal (steel) in accordance with Paragraph 7.12, using non-powered mechanical methods specified in Section I of Chapter 5.

c. Immediately before painting, wipe areas which will be painted with a lint free cloth moistened with SAE AMS 3166 wipe solvent; and dry with a clean cloth. Do not allow drying by evaporation, since soils will redeposit on the surface.

d. Apply the specified finish system for steel tubing in the system peculiar technical manuals per TO 1-1-8 procedures.

7.13.4 Special Instructions for Tubing Fittings and Sleeves. Corrosion often occurs on sleeves and their fittings and/or on the tubing in contact with them due to the crevices present at their attachment points. Galvanic corrosion often occurs because the type of sleeve or fitting chosen is not electrochemically compatible with the tubing. When corrosion is found on these areas or when tubing, fittings, or sleeves are replaced, consult the applicable system peculiar maintenance manual to determine the proper types of sleeves and fittings. Fillet seal all fittings located in areas which are inaccessible for inspection and refinishing during operational service at the joint area with MIL-PRF-81733, Type II, Class 1 or 2, Grade A sealant at the time of installation and prior to painting. After sealant is tack-free, paint the tubing, fittings, and sealant as directed in tubing in the system peculiar technical manuals per TO 1-1-8 procedures.

7.13.5 Removable Installations.

WARNING

- Do not use MIL-PRF-16173 corrosion preventive compounds on any oxygen line fittings. These materials contain petroleum solvents that are not Liquid Oxygen (LOX) compatible. Explosion may occur if oxygen contacts these materials and if the resulting mixture is subjected to sudden pressure or impact. After installation, apply the exterior paint system specified in the applicable system peculiar maintenance manual with application per procedures in TO 1-1-8 to exposed tubing, sleeves, and back portions of the B nuts of these fittings and a LOX compatible grease/lubricant to the gap at the front end of the B nut and the adjacent tubing for a length of one inch.
- Provide adequate ventilation when using A-A-59601 and/or MIL-PRF-680 degreasing solvents. Avoid repeated or prolonged skin contact of inhalation or vapors.

7.13.5.1 Do not apply the finish system on fittings and adjacent tubing for a distance of one inch from the back and front ends of the fittings on tubing areas requiring periodic removal and/or opening during service. Clean all old preservative coatings and dirt from the fitting, sleeves, and tubing ends with a clean, lint free cloth wetted with either A-A-59601, Type II or III, or MIL-PRF-680, Type II or III degreasing solvent and wipe dry with a clean, dry lint free cloth before reinstalling tubing and tightening fittings. Except for oxygen line fittings, apply a MIL-C-81309, Type II; MIL-L-87177, Type I or II, Grade B; or MIL-PRF-16173, Class II, Grade 3 water displacing, CPC by spray or brush to all fitting surfaces after they are tightened, including the exposed areas of the sleeves and the unfinished areas of the tubing. Allow the CPC to dry for at least one hour, and apply MIL-PRF-16173, Class II, Grade 4, or MIL-C-85054 CPC over the same areas by spraying or brushing.

7.14 CORROSION REMOVAL FROM THIN METAL (0.0625 INCH THICKNESS AND LESS).

CAUTION

Do not allow metallic or corrosion particles to build up around the area being polished or on the polishing tool (abrasive cloth or paper) during the polishing operation. Damage to thin metal surfaces may result.

Moderate to severe pitting and all intergranular and/or exfoliation corrosion on thin metal requires removal by mechanical methods specified in Section I of Chapter 5 as appropriate for the type of metal involved. Use extreme care and consult the applicable system peculiar maintenance manual for structural damage limits when removing corrosion from thin metal. When stains, surface corrosion, and mild pitting are found on thin structural skins (i.e., aircraft, missile, and equipment skins), chemical methods specified in Section I of Chapter 5, as appropriate for the type of metal involved, may be used to remove the corrosion. In lieu of chemical corrosion removal, the following convenient and effective mechanical method for the removal of minor corrosion or stains on all metals may be used:

a. Mix ground SS-P-821, Grade F pumice powder abrasive with clean tap water to form a paste. Using a clean, soft cloth (such as CCC-C-440 cheesecloth), apply the paste to the area being treated and abrade the area with a light rubbing motion.

b. When the pumice paste has dried to a white powder, wipe it off with a clean, dry, soft cloth. If corrosion products (observed as stubborn stains) still exist, use a 600 grit wet or dry abrasive paper, cloth, or mat and water to remove the remaining corrosion. Wipe clean with a clean, soft, dry cloth.

c. Refer to Section II of Chapter 5 for the required surface treatment on the type of metal involved, and touch-up

the area with the finish system specified in the applicable system peculiar maintenance manual with application per procedures in TO 1-1-8.

7.15 AIR INTAKE DUCTS FOR JET AIRCRAFT.

Air intake ducts are fabricated from materials (usually 5000 series aluminum) which have high corrosion resistance. Certain components of these ducts may be cast aluminum or magnesium. Frequent cleaning of the ducts is usually sufficient to preclude attack by corrosion. Aircraft performing low level missions or take-offs and landings over salt water or in highly saline atmospheres may require the ducts to be painted to reduce corrosion attack. A requirement for a coating as determined and/or recommended by the operating unit shall be coordinated with the MAJCOM Corrosion Manager, the aircraft SPD, and the Air Force Corrosion Prevention and Control Office (AFCPCO). The MIL-PRF-23377, Type I, Class C epoxy primer/MIL-PRF-85285 or APC polyurethane topcoat paint system, color to match the surrounding area, is usually recommended for painting the ducts, but the final determination of the coating to be used shall be made by the aircraft SPD in conjunction with the AFCPCO.

7.16 CLOSELY COILED SPRINGS.

Springs which are so tightly coiled that the areas between the coils can not be plated or painted for corrosion protection shall be coated with a MIL-C-81309, Type II; MIL-L-87177, Type I or II, Grade B; or MIL-PRF-16173, Class II, Grade 3 water displacing CPC applied by spraying or dipping and allowing it to dry for at least one hour. After drying, a coating of MIL-PRF-16173, Class II, Grade 4 CPC shall be applied to the springs by spraying or dipping.

NOTE

These requirements do not apply to springs operating in oil or hydraulic fluids.

7.17 CORROSION PREVENTION ON ASSEMBLIES AND PARTS REMOVED FROM AIRCRAFT DURING MAINTENANCE, 30 DAY SHORT TERM STORAGE, AND OVER 30 DAY LONG TERM STORAGE REQUIREMENTS.

7.17.1 Short Term Storage. Short term storage is defined as any period up to 30 days for the purposes of this manual. When assemblies or parts are removed from the aircraft, missile, or equipment for repair, or to gain access to areas of the aircraft, missile, or equipment for maintenance, they shall be treated to prevent corrosion prior to placement into short term storage. All items shall be stored indoors in a covered area to protect them from the elements. Refer to TO 1-1-17 and the applicable system peculiar maintenance manual and -17 storage manual for specific details on storage of a particular part or assembly.

7.17.1.1 Assemblies or parts having bare metal surfaces, such as internal and working surfaces on landing gear components, shall be properly lubricated or protected by coating with the aircraft, missile, or equipment greases, hydraulic fluids, or oils normally applied in operational service.

7.17.1.2 High strength steel components which are stripped of their protective coatings shall have a film of MIL-C-81309, Type II; MIL-L-87177, Type I or II, Grade B; or MIL-PRF-16173, Class II, Grade 3 water displacing CPC applied to all bare surfaces whenever there is a lapse of two hours or more in the rework cycle. The part shall then be loosely over-wrapped with MIL-B-121, Type II, Grade A, Class 1 barrier paper.

7.17.1.3 Completely painted parts need no other special protective measures, except in marine or high humidity environments. In these cases, a MIL-C-81309, Type II; MIL-L-87177, Type I or II, Grade B; or MIL-PRF-16173, Class II, Grade 3 water displacing CPC shall be applied to the part. The part shall then be loosely over-wrapped with MIL-B-121, Type II, Grade A, Class 1 barrier paper.

7.17.1.4 Prior to rework or reapplication of the required protective coating, remove old CPC with solvent, and reapply the appropriate aircraft, missile, or equipment lubricant to areas requiring lubrication. The CPC compound applied to provide temporary protection shall not be used for lubrication in lieu of the appropriate lubricant specified for use on a particular part or assembly.

7.17.2 Long Term Storage. If the storage of assemblies or parts will exceed 30 days, increased protective measures are required, particularly on critical parts and high strength steel components. All items shall be stored indoors in a covered area to protect them from the elements. Refer to TO 1-1-17 and to the applicable system peculiar maintenance and -17 storage manuals for specific details on storage of a particular part or assembly.

7.17.2.1 All bare metal surfaces, and surfaces with damaged plating or paint, shall be coated with MIL-C-81309, Type II; MIL-L-87177, Type I or II, Grade B; or MIL-PRF-16173, Class II, Grade 3 water displacing CPC followed by application of a coating of MIL-PRF-16173, Class II, Grade 4 long term CPC. The part shall then be over-wrapped with MIL-B-121, Type II, Grade A, Class 1 barrier paper.

7.17.2.2 Completely repainted parts need no other special protective measures, except in marine or high humidity environments. In these cases, surfaces shall be coated with MIL-C-81309, Type II; MIL-L-87177, Type I or II, Grade B; or MIL-PRF-16173, Class II, Grade 3 water displacing CPC followed by application of a coating of MIL-PRF-16173, Class II, Grade 4 long term CPC. The part shall then be over-wrapped with MIL-B-121, Type II, Grade A, Class 1 barrier paper.

7.17.2.3 Depending on the length of time in storage, reapplication of CPC's may be required. Refer to Section III of Chapter 3 for time limitation information on CPC's.

7.17.2.4 Prior to returning the part or assembly to service, remove CPC's with solvent and reapply the appropriate aircraft, missile, or equipment lubricant to areas requiring lubrication. The CPC compound applied to provide temporary protection shall not be used for lubrication in lieu of the appropriate lubricant specified for use on a particular part of assembly.

7.18 DEPLETED URANIUM COUNTER-WEIGHTS.

Many aircraft control surfaces such as ailerons and elevators are equipped with counter-weights fabricated from depleted uranium for mass balancing purposes. Depleted uranium is used because of its very high weight per unit of volume (density). To protect the depleted uranium from corrosion, many of the counterweights are plated with a copper strike, followed with a nickel strike, followed by a full thickness cadmium plate and then overcoated with the organic finish (paint) system specified for the specific aircraft. These counter-weights are usually impression stamped for identification as follows; "Caution: Radioactive Material, Depleted Uranium, High Salvage Value, Manufactured by - - -, Fabrication No. - - -, Finished Weight - - - lb. Unauthorized Alterations Prohibited." All personnel shall observe the following requirements of the Nuclear Regulatory Commission relative to depleted uranium.

WARNING

To restrict radiation exposure to a maximum of 10% of the Nuclear Regulatory Commission's established limits for radioactive materials workers and to comply with the requirements in AFI 40-201, observe these precautions to control exposure to radiation emitted from these weights. Failure to comply may result in overexposure to radiation and the need for medical attention.

a. All work on depleted uranium counterweights shall conform to the requirements of AFI 40-201.

b. Chemical or mechanical processing of depleted uranium counterweights, other than repair or restoration of plating, organic finish system, and/or other covering, requires a Nuclear Regulatory Commission license.

c. Do not machine, grind, file, sand, drill, weld, or otherwise mechanically work these counterweights at field/organizational maintenance units. Depleted uranium and its oxide corrosion products in the form of dust, fumes, or particles are highly toxic if ingested.

d. If at all possible, remain at least two feet away from the depleted uranium counterweights since radiation is almost nil at this distance and greater. If any part of the body comes within 1 foot of a depleted uranium counterweight, keep a record of the exposure time; and do not allow the total exposure time to exceed 40 hours per calendar quarter. If it becomes necessary to touch a depleted uranium counterweight, keep a record of the exposure time; and do not allow the total exposure time to exceed 13 hours per calendar quarter.

e. If an aircraft with control surfaces having depleted uranium counterweights is being transferred to another unit or the aircraft or one of its control surfaces is being scrapped, notify the receiving unit and/or salvage personnel of their presence and bring these precautions to their attention.

f. Remove the depleted uranium counterweights and/or the control surfaces containing them from the aircraft after any aircraft accident.

g. Dispose of depleted uranium counterweights per directions in AFI 40-201.

NOTE

Refer to applicable system peculiar maintenance manual to determine the location of depleted uranium parts and to determine any specific directions for work either on the counterweights or in areas immediately adjacent to the counterweights.

7.18.1 Corrosion and Finish Damage Treatment Procedures. Follow these procedures when treating finish system and/or corrosion damage on depleted uranium counterweights:

7.18.1.1 Visually inspect the organic finish system (paint) for blisters and flaking. If found, peel away the paint flakes and inspect the plating for blisters and flaking. If found, peel away the plating flakes and inspect the surface of the depleted uranium for pitting and/or intergranular exfoliation corrosion. The corrosion products are very dark brown to gray to black color similar to rust on steel and will flake off in the same fashion.

7.18.1.2 Collect all of peeling and/or flaking paint and/or plating residue, check it for radioactivity, and dispose of it per instructions in AFI 40-201 if radioactivity is noted.

7.18.1.3 Field/organizational units are not authorized to remove corrosion found on the depleted uranium itself. Field/organizational units are limited to the following actions on depleted uranium counterweights:

a. Accomplish Paragraph 7.18.1. and Paragraph 7.18.1.2 above.

b. Apply one thick coat of MIL-PRF-81733, Type I or II, Class 1 or 2, Grade A sealant to the bare area with a brush per the manufacturer's instructions.

c. After the sealant cures at least to a tack free state, apply one coat of MIL-PRF-85285 polyurethane in the color

specified in the system peculiar technical data by brush per procedures in TO 1-1-8 over the sealant with a slight overlap onto the surrounding paint surface.

d. Make an entry in the appropriate aircraft forms to indicate a requirement for depot level repair of the affected counterweight at the next aircraft depot input for PDM or other depot level maintenance.

7.18.1.4 Depot facilities (ALC prime for the aircraft) can remove corrosion from depleted uranium counterweights and rework them, but only if properly licensed by the Nuclear Regulatory Commission. If the prime ALC is not licensed to perform the work, the affected counterweights shall be removed from the control surfaces and packaged for shipment per instructions in AFI 40-201, and shipped to a properly licensed facility for either rework or disposal as appropriate. If the prime ALC performs rework of depleted uranium counterweights after they are removed from the control surface, it shall be done in accordance with AFI 40-201 and a definitive process order developed and approved by the aircraft SPD in conjunction with the ALC corrosion prevention and control manager. This process order shall include the following procedures as a minimum:

a. Remove the affected counterweight from the control surface per instructions in the applicable system peculiar maintenance manual.

b. Remove the paint from the counterweight surfaces per procedures in TO 1-1-8.

c. Remove the plating from the counterweight surfaces per procedures in TO 42C2-1-7.

d. Remove any corrosion from the depleted uranium surfaces using an appropriate mechanical method in Section I of Chapter 5 of this manual that is approved and listed in the process order making sure to observe all the precautions in the WARNING above and in AFI 40-201.

e. Check all residue for radioactivity, and dispose of any residue found to be radioactive per instructions in AFI 40-201.

f. Replate the counterweight with the plating(s) specified in the applicable system peculiar technical data per procedures in TO 42C2-1-7.

g. Apply a MIL-PRF-23377, Type I, Class C epoxy primer and MIL-PRF-85285 polyurethane topcoat in the color specified in the applicable system peculiar maintenance manual per procedures in TO 1-1-8.

h. Reinstall the counterweight on the control surface per instructions in the applicable system peculiar maintenance manual with faying surfaces and fasteners wet with MIL-PRF-81733 Type I or IV, Class 1 or 2, Grade A sealant.

7.19 MONEL RIVETS.

Corrosion of nickel-copper alloy (monel) is evidenced by green corrosion products (patina). Removal of this type of corrosion is not required as the corrosion products are very adherent and provide a degree of protection to the monel base metal. If desired, corrosion products may be removed as follows:

a. Scrub with a non-metallic bristle brush wet with solution of 6 oz of ASTM D928 sodium bicarbonate per gallon of water.

b. Thoroughly rinse the affected area with fresh tap water and wipe dry with a clean, lint free cloth or blow dry with oil free, low pressure air.

7.20 BERYLLIUM-COPPER ALLOYS, BERYLLIUM-ALUMINUM ALLOYS, AND BERYLLIUM OXIDE.

WARNING

Dust, corrosion products (beryllium oxide), and other fine particles generated by beryllium and beryllium alloys are toxic when inhaled or allowed to contact skin. Severe poisoning can result if beryllium dust and/or fumes are inhaled and cause delayed lung injury and/or death. OSHA regulations require use of Personal Protective Equipment (PPE) suitable for the task being performed. Consult the local Bioenvironmental Engineer for determination of the type of PPE required. Do not weld, drill, cut, file, sand, abrade, machine, or perform any other mechanical action on beryllium alloy parts that will create airborne dust particles from the operation without using appropriate PPE and facility dust collection systems.

NOTE

Surface discoloration is normal and removal is neither advised nor is it necessary.

7.20.1 Corrosion Removal and Treatment. If it is not feasible to remove the part from the aircraft, missile, or piece of equipment for corrosion removal and treatment, the procedure may be performed on an installed part in place. To minimize the generation of fine beryllium, beryllium oxide, beryllium-copper alloy, and/or beryllium-aluminum alloy dust particles when removing corrosion from beryllium-copper alloy fittings such as contacts, bushings, etc., and beryllium-aluminum alloy parts, proceed as follows:

a. Wear disposable coveralls, gloves, hood, cartridge respirator, and other PPE as required by the local Bioenvironmental Engineer.

b. Dampen an A-A-58054, Type I, Grade B abrasive mat with A-A-59601 or MIL-PRF-680, Type II or III degreasing solvent, and abrade the corrosion products from the surface.

c. To prevent the spread of toxic dust, keep mat wet throughout the corrosion removal process.

d. Clean the surface with disposable towels dampened with degreasing solvent after the completion of corrosion removal, and wipe dry with a clean, dry towel.

e. Apply a film of MIL-C-81309, Type II, or MIL -L-87177, Type I, Grade B water displacing, CPC to beryllium-copper bushings and MIL-C-81309, Type III, or MIL-L-87177, Type I, Grade B to beryllium-copper contacts by spraying. Apply a MIL-C-81706/MIL-C-55441, Class 1A conversion coating to the surface of beryllium-aluminum alloy parts per procedures in Section II of Chapter 5.

f. Wipe work area clean with disposable towels dampened with A-A-59601 or MIL-PRF-680, Type II or III degreasing solvent, and wipe the area dry with a clean, dry towel.

g. Place disposable towels, abrasive mats, and coveralls in a plastic bag marked, “Beryllium Contaminated Waste”.

h. Close the plastic bag with SAE AMS-T-23397 (MIL-T-23397), Type II aluminum foil tape.

i. Discard all in accordance with local environmental directives.

j. Wash hands with soap and water immediately after completion of the task.

7.20.2 Depot Maintenance. If it is feasible, operationally acceptable, and replacement parts are readily available, beryllium alloy parts should not be reworked to remove corrosion by field/organizational level maintenance personnel. The parts should be removed from the aircraft, missile, or piece of equipment, properly packaged, and shipped to the responsible depot (ALC) for rework using the following procedures:

a. Wear disposable coveralls, gloves, cartridge respirator and other PPE as required by the local Bioenvironmental Engineer.

b. Remove the corroded part, and place it in a plastic bag marked, “Beryllium Alloy Part”.

c. Close the plastic bag with SAE AMS-T-23397 (MIL-T-23397), Type II aluminum foil tape.

d. Package the part for shipment to the responsible depot (ALC) for rework.

e. Clean the area from which the part was removed with disposable towels dampened with A-A-59601 or MIL-PRF-680, Type II or III degreasing solvent, and wipe dry with a clean, dry towel.

f. Install a new replacement part in the area from which the old, corroded beryllium alloy part was removed per the appropriate system peculiar technical data.

g. Place disposable towels and coveralls in a plastic bag marked, “Beryllium Contaminated Waste”.

h. Close the plastic bag with SAE AMS-T-23397 (MIL-T-23397), Type II aluminum foil tape.

i. Discard all in accordance with local environmental directives.

j. Wash hands with soap and water immediately after completion of the task.

7.21 EMI SEALS AND GASKETS.

Radiated electromagnetic fields (produced by radar antennas; aircraft, and missile transmitters; certain poorly designed avionics units; electric motors; lightning; or any other natural effects) can interfere with aircraft avionics systems causing electrical and/or electronic malfunctions. This radiation is known as electromagnetic interference (EMI). To prevent malfunctions caused by EMI, electrically conductive shielding is either built into the avionic device or must be added to access panels, doors, or covers to: prevent emission of EMI from its own circuits and; prevent susceptibility to outside EMI. EMI seals and gaskets may also act as environmental seals in certain locations especially around doors and access panels. Since aluminum surfaces oxidize very easily, thus becoming much less conductive and/or non-conductive, other materials have been used to make electrical contacts (i.e., beryllium-copper, titanium, silver-plated aluminum, and tin-zinc coatings). However, since these contacts must provide a conductive path to an aluminum or graphite/epoxy skin, corrosion often occurs at the junction of these dissimilar metals. When corrosion occurs, the conductive path is lost along with the EMI protection, making the aircraft susceptible to electrical and electronic malfunctions caused by external radiation. Examples of system malfunctions are microprocessor bit errors, computer memory loss, false indicators (alarms, lights, read-outs), CRT ripple, false signals and power loss. The result of such malfunctions can be catastrophic (e.g. EMI radiation was responsible for an aircraft jettisoning a bomb while taking off from a carrier). The following are typical EMI shielding materials: elastomeric seals and gaskets with an embedded or attached conductor (Figure 7-1), conductive elastomer gaskets (Figure 7-2), metallic screens installed under composite covers (Figure 7-3), bonding cables for access doors (Figure 7-4), and bonding washers for avionics enclosures (Figure 7-5).

7.21.1 Treatment of EMI Seals and Gaskets. When corrosion is observed in such areas, disassemble only the

affected areas and remove the corrosion using the mildest available method necessary to remove the corrosion. Carefully clean the area with a lint free cloth wet with TT-I-735 isopropyl alcohol. Dry with a clean cloth. If replacement seals are available, install them in accordance with the appropriate aircraft, missile, or equipment system peculiar maintenance manual. If replacement seals are not available or do not exist, spray the contacting surfaces with a light coating of MIL-C-81309, Type III avionics grade, water displacing CPC, and then reassemble. Periodically inspect repaired areas and areas known to be chronic problems.

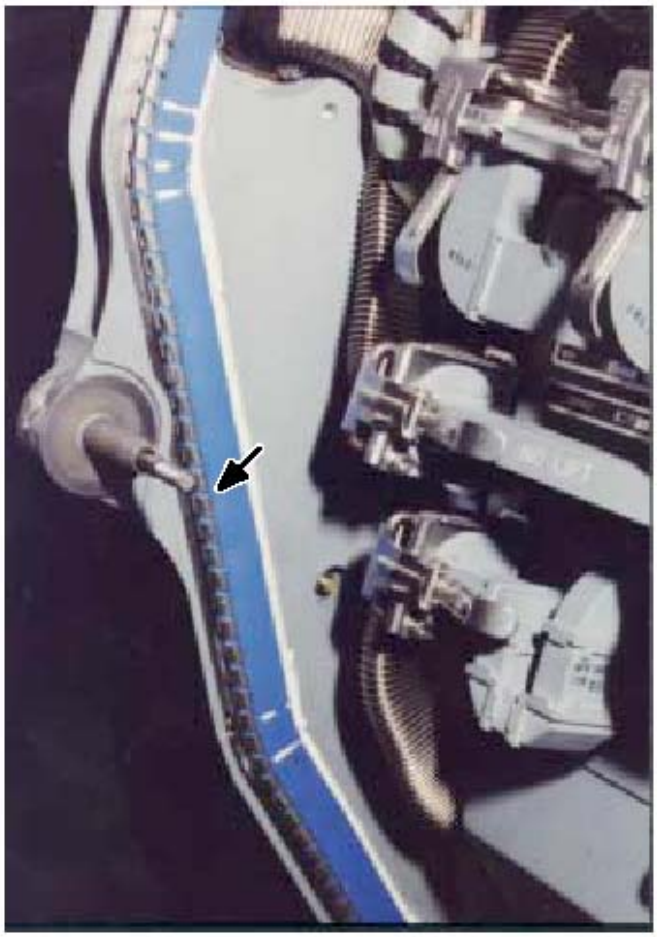

Figure 7-1. Beryllium-Copper Spiral Contact With Environmental Fluorosilicone Seal

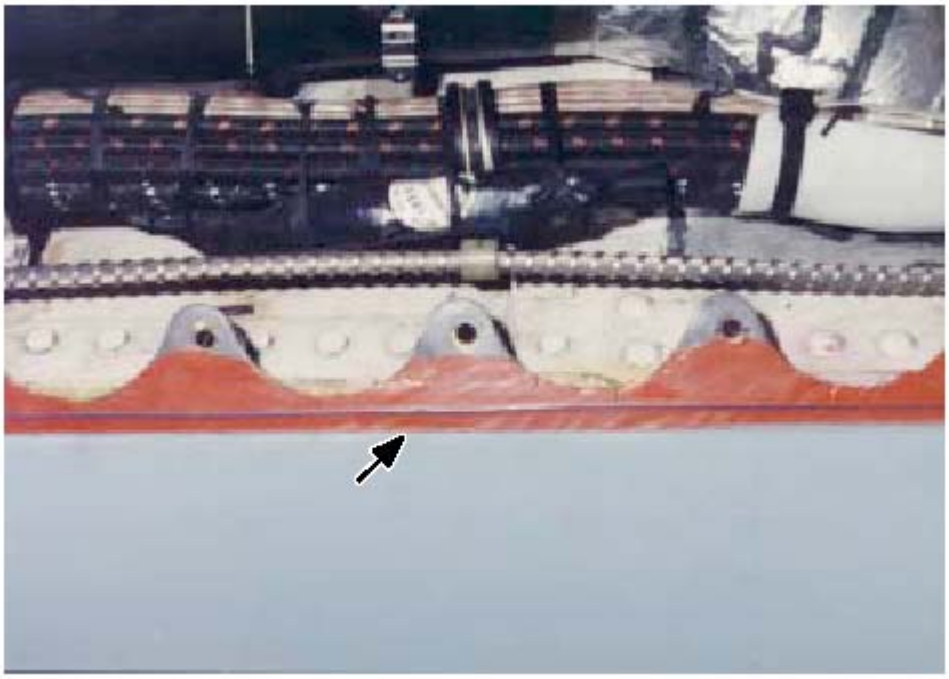

Figure 7-2. Dorsal Longeron EMI Seal

Figure 7-3. Stainless Steel (CRES) EMI Screen

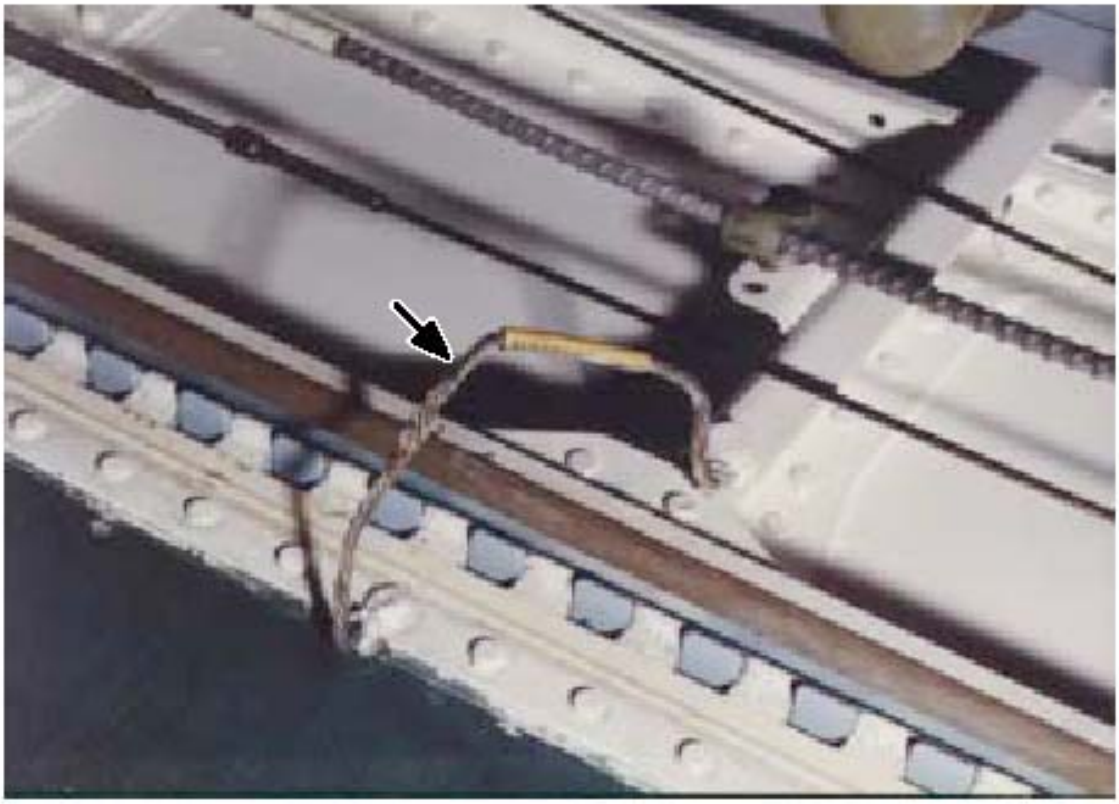

Figure 7-4. Bonding Cable From Airframe To Graphite/Epoxy Avionics Bay Door

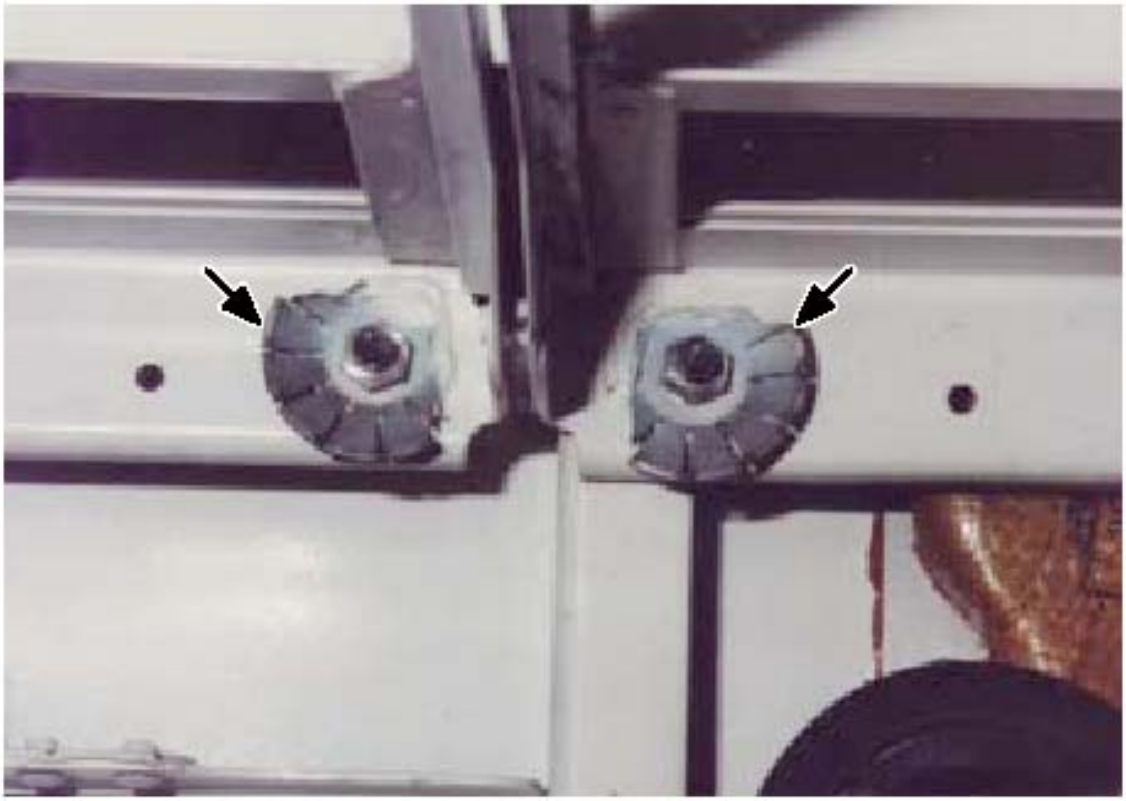

Figure 7-5. EMI Bonding Washers in an Avionics Bay

CHAPTER 8
EMERGENCY PROCEDURES

8.1 PURPOSE.

This chapter describes emergency procedures to be followed after aircraft, missile, or equipment incidents or accidents involving exposure to gross amounts of salt water or fire extinguishing agents. The procedures described are used to prevent further damage before more extensive cleanup at either organizational or intermediate maintenance can be performed and/or further treatment at depot level maintenance can be accomplished.

8.2 RESPONSIBILITY.

CAUTION

Exposure to salt water, purple K powder (PKP/potassium bicarbonate), and/or protein type fire fighting foam require immediate action to prevent serious corrosion damage.

NOTE

In cases involving aircraft, missile, or equipment accidents, permission must be obtained from the senior member of the accident investigation board prior to the initiation of emergency procedures.

Under emergency conditions, all personnel are responsible for minimizing damage. Removal of equipment shall be supervised by the organizational unit maintenance officer in conjunction with the maintenance superintendent. They shall designate an officer or senior NCO as the corrosion control officer, whose duties will include organizing and supervising an emergency reclamation team and directing the team to accomplish salvage operations or corrosion control action. The size and composition of the team depends on the urgency of the situation and/or workload. If required, additional personnel from outside the maintenance squadron shall be selected and placed under the direction of the corrosion control officer. In case of fire damage, the aircraft SPD and/or the missile or equipment SPM and cognizant ALC corrosion prevention and control manager must be contacted to determine the effects of heat or excessive salt water and/or fire fighting material contamination prior to continued use or repair of affected parts or components.

8.3 EMERGENCY PREPARATIONS.

Emergency preparations shall include the development of priority lists for removal of equipment, emergency reclamation team planning, and lists of required tools, materials, and equipment with notations of their location and availability within the organizational unit and/or where they can be obtained if not readily available at the unit.

NOTE

Each organizational unit maintenance officer and/or maintenance superintendent shall prepare or have access to a list of installed equipment/components indicating removal priority from affected aircraft, missiles, or equipment in emergency conditions.

8.3.1 Priority Removal List of Equipment and/or Components.

CAUTION

Magnesium parts are particularly susceptible to corrosive attack when exposed to salt water or fire extinguishing materials. Avionic, electronic, electrical, and ordnance equipment known to contain magnesium components shall be given high priority for cleaning. Contaminants shall be removed promptly to prevent serious damage.

Table 8-1 is a tabulation of aircraft, missile, and equipment component groups arranged in order of suggested priority of treatment. Among the factors considered in the development of the table were dollar value, corrosion rate, and probability of successful salvage. Whenever manpower or facility shortage prohibits simultaneous processing of all components, treatment shall be given in the order of the priority listing. The table should be considered as a guide, and operations may deviate from the assigned priority when directed by qualified organizational unit production planning personnel

or maintenance officer and/or maintenance superintendent or the cognizant ALC SPD and/or SPM engineering personnel.

NOTE

Table 8-1 is a priority guide for removing and processing equipment which has been exposed to corrosive salt water or fire fighting chemicals. Variations in aircraft, missile, or equipment design configurations and mission equipment installations may make it necessary to contact the affected aircraft SPD and/or missile or equipment SPM and request them to furnish listings of equipment and preferred priority of removal and treatment. Priority of removal and treatment should always be oriented toward recovery of salvageable equipment

8.3.2 Emergency Reclamation Team. The emergency reclamation team will provide expertise and facilities for processing equipment received from accident/incident sites at the operational unit. This team shall be responsible for processing equipment received. The size of the team, its organization, and the specific equipment requirements will be geared to the size and needs of the reclamation operation at hand. Recommended equipment includes wash/rinse facilities, drying ovens, dip tanks (for water displacing compounds and preservatives), and cleaning compounds.

8.3.3 Emergency Reclamation Equipment. The availability of the necessary tools, materials, and equipment for the prompt removal, cleaning, and drying of avionic, electronic, and electrical equipment will significantly aid in reducing damage. Refer to material and equipment lists in Table 8-2 and Appendices A and B. Certain useful items of equipment are:

- Drying ovens
- Portable air blowers
- Heaters
- Backpack pumps
- Vacuum cleaners
- Hoses and washing equipment

8.3.4 Production Planning. Whenever possible, all salvageable components of the affected aircraft, missile, or equipment shall be treated simultaneously. To minimize damage and ensure that the work is accomplished in a thorough and competent manner, the most experienced personnel available shall be assigned to disassemble and process the aircraft, missile, or equipment. Whenever possible, examination and evaluation personnel shall be assigned to work with the disassembly and preservation crew in order that those items obviously beyond reclamation may be scrapped immediately; and that only those areas exposed to corrosive salt water or fire fighting chemicals are disassembled and treated. The time saved by this procedure may be utilized to accelerate preservation of salvageable components.

8.4 GENERAL PROCEDURES.

WARNING

Before starting emergency treatment, particularly in those instances where fuel cells have been ruptured and fuel or fuel vapors are present, it is imperative that a fuel system specialist and/or the safety officer supervise purging or inerting procedures and certify that the affected aircraft, missile, or equipment is fire and explosion safe. Qualified missile and/or ordnance personnel shall be assigned to handle all missiles, ordnance and associated items, such as ammunition and pyrotechnics.

For cases involving aircraft, missile, or equipment accidents, permission for any treatment shall be obtained from the senior member of the accident investigation board prior to initiating procedures for emergency reclamation to prevent jeopardizing the ability to determine the cause of the incident.

NOTE

CBR decontamination procedures for aircraft, missiles, and equipment exposed to chemical, biological, and/or radiological materials are found in TO 00-110A-1 and AFI 40-201.

a. Determine from the local fire department which fire extinguishing agent was used. A review of photographs taken by public affairs and/or other media personnel may provide information concerning areas that were actually exposed to corrosive fire extinguishing materials such as foam, and purple K (PKP).

Table 8-1. Priority Guide for Emergency Treatment of Aircraft, Missiles, & Equipment

Priority Number	Reciprocating Engine	Gas Turbine Engine	Turboprop, Turboshaft Engine	Helicopters
1	Engine, propeller, and accessories	Engine and accessories	Engine, propeller, propeller drive gear mechanisms, and accessories	Rotor dynamic components

Table 8-1. Priority Guide for Emergency Treatment of Aircraft, Missiles, & Equipment - Continued

Priority Number	Reciprocating Engine	Gas Turbine Engine	Turboprop, Turboshaft Engine	Helicopters
2	Avionic and fire control equipment	Avionic and fire control equipment	Avionic and fire control equipment	Engine, rotors, and accessories
3	Instruments	Instruments	Instruments	Avionic and fire control equipment
4	Fuselage, wings, and empennage	Fuselage, wings, and empennage	Fuselage, wings, and empennage	Instruments
5	Turrets, and rocket and missile launchers	Turrets, and rocket and missile launchers	Turrets, and rocket and missile launchers	Fuselage
6	Drained fuel and oil systems	Drained fuel and oil systems	Drained fuel and oil systems	Drained fuel and oil systems
7	Photographic equipment	Photographic equipment	Photographic equipment	Photographic equipment
8	Landing and arresting gear	Landing and arresting gear	Landing and arresting gear	Landing gear or floats
9	Safety and survival equipment	Safety and survival equipment	Safety and survival equipment	Safety and survival equipment
10	Electrical equipment	Electrical equipment	Electrical equipment	Electrical equipment
11	Armament equipment	Armament equipment	Armament equipment	Armament and rescue equipment
12	Fixed equipment (seats, etc.)	Fixed equipment (seats, etc.)	Fixed equipment (seats, etc.)	Fixed equipment (seats, etc.)
13	Miscellaneous equipment	Miscellaneous equipment	Miscellaneous equipment	Miscellaneous equipment
1	Warheads	Engines and accessories		
2	Engines and accessories	Instruments		
3	Guidance systems and sensors	Electronic and electrical equipment		
4	Electrical equipment	Drained fuel and oil systems		
5	Miscellaneous equipment	Fixed equipment (seats, etc.)		
6	Miscellaneous equipment	Suggested List of Emergency Reclamation Items		

Table 8-2. Suggested List of Emergency Reclamation Items

Priority Number	Accessories	Order Info.	Specification Part Number
1	Aircraft Grounding Straps	-	-
2	Aircraft Washing Kits	App. B, #1	3M Co. PN 251
3	Cleaning & Scouring Pads, Non-metallic	App.B, #2	A-A-3100
4	Soft Bristle Scrub Brushes	App. B, #3	A-A-2074
5	Backpack Pump (5-gallon)	App. B, #10	-
6	Spray Gun, Pneumatic	App. B, #11	MIL-G-952, Type I
7	Drying Rags	App. A, #37	CCC-C-458
8	Leather Chamois	App. A, #36	KK-C-300

Table 8-2. Suggested List of Emergency Reclamation Items - Continued

Priority Number	Accessories	Order Info.	Specification Part Number
9	Cleaning Sponges	App. B, #1	A-A-2073
10	Air Nozzle Gun	App. B, #31	A-A-55543
11	Air Hose Assembly	App. B, #32	ZZ-H-500 / ZZ-H-521
12	Vacuum Cleaner, Pneumatic (Wet/D Vac)	App. B, #17 & 18	A-A-54943
13	Utility Pails, Plastic	App. B, #21	A-A-59243
14	Large Trash Cans & Plastic Liners	-	-
15	Water Nozzle	App. B, #8	A-A-50461
16	Water Hose	App. B, #9	A-A-59270
17	Goggles, Chemical Resistance	App. B, #101	A-A-1110
18	Face Shield, Industrial	App. B, #99	ANSI Z87.1
19	Rubber Apron	App. B, #98	A-A-3104
20	Rubber Gloves, Industrial	App. B, #82	MIL-G-12223
21	Leather Palm Gloves (for handling composite materials, medium sized only)	NSN: 8415-00-268-8350	A-A-50016
22	Barrier Material	App. A, #69	MIL-PRF-131, Class 1
23	Aircraft Preservation Tape	App. A, #73	AMS-T-22085, Type II
24	Full Face Piece Respirator & Cartridges	App. B, #64 & 67	-
25	Disposal Coveralls (Bunny Suit).	App. B, #88	A-A-55196, Type II
26	Heater Gun, Electric	App. B, #16	A-A-59435
	Consumable Materials		
27	Corrosion Preventive Compound, Water Displacing (5-gal min.)	App. A, #43 & 44	MIL-C-81309,Type II & III; & MIL-L-87177, Type I & II, Grade B
28	Aircraft Cleaning Compound	App. A, #19 & 20	MIL-PRF-87937, Type IV; MIL-PRF-85570, Type II
29	Engine Gas Path Cleaner	App. A, #22	MIL-PRF-85704, Type II RTU
30	Degreasing Solvent	App. A, #97	A-A-59601, Type II; MIL-PRF-680, Type II
31	Isopropyl Alcohol (IPA)	App. A, #101	TT-I-735
32	Fire Extinguishing Agent (AFFF)	App. A, #59	MIL-F-24385

b. Ensure that the aircraft, missile, or equipment is safe for maintenance. Electrically ground the aircraft, missile, or equipment by attaching the ground lead to the aircraft, missile or equipment at a point outside the area that could contain explosive vapors. Turn off all electrical power and disarm all explosive and/or firing systems on a missile or an aircraft, including the ejection seat(s) on an aircraft .

c. Closely inspect the aircraft, missile, or equipment to determine areas affected. Traces of foam type extinguishing agents may not be evident; however, moist residues often indicate previous foam application. Dry powders may be present in joints, faying surfaces, etc., so a careful examination will be necessary to determine if they are present.

d. Wherever possible, remove components from affected areas. Open, loosen, or remove covers, access plates, inspection doors, etc. Allow any accumulated salt water or other liquids to drain off. If dry chemical fire extinguishing materials have been used, refer to Paragraph 8.5.3.

e. Remove gross amounts of contaminants by flushing with fresh water and draining.

f. Remove components and process in accordance with Paragraph 8.4.2 and Paragraph 8.4.3.

g. Clean the aircraft in accordance with Paragraph 8.4.4.

h. Inspect aircraft, missile, or equipment and determine whether it can return to operational service following local organizational level maintenance action or whether additional higher level maintenance will be necessary. If aircraft is locally repairable, repairs must be permanent repairs before the aircraft, missile, or equipment is released for unrestricted operational service.

8.4.1 Removal of Contaminated Installed Equipment. After salt water immersion or entry or exposure to any corrosive agents, equipment must be cleaned promptly and thoroughly. Follow the procedures in this chapter for decontaminating specific areas and equipment. Refer to Table 8-1 for assigning priority to equipment removal and treatment.

8.4.2 Disassembly/Removal of Components.

8.4.2.1 The mechanical cutting of fuel, hydraulic and oil lines, and electrical leads, and other drastic operations necessary to expedite removal of parts are left to the discretion of the maintenance officer and/or maintenance superintendent directing the operations.

8.4.2.2 When aircraft are involved in water crashes, it shall be assumed that all components, including hollow structural and mechanical members, are contaminated internally. All components shall be disassembled and treated or forwarded to the appropriate ALC depot for disassembly and treatment as required. Ensure that all contaminants have been removed and that all corroded surfaces have been effectively treated to inhibit further attack prior to returning the aircraft to operational service.

8.4.3 Clean. Equipment and components shall be cleaned by the team, in accordance with Paragraph 8.5, Paragraph 8.6, and Paragraph 8.7, and then delivered to the designated shops for further inspection and maintenance. Equipment that cannot be removed shall be cleaned in place and inspected.

NOTE

All equipment subject to emergency reclamation team procedures must be certified operationally ready before returning to serviceable status. Inspect equipment for corrosion, cracks and heat damage. Obtain the maximum available engineering assistance to evaluate the extent of damage. Particular attention shall be given to dissimilar metal joints. Avionic, electronic, and electrical equipment usually contain dissimilar metals.

8.4.4 Tagging. All parts and components removed from the aircraft, missile, or equipment shall be "green" tagged (DD Form 1577-3) for identification, description of the accident/incident experienced, listing of the contaminants and chemical materials to which they were exposed, and to indicate the type of CPC applied. CPC's shall be removed prior to reusing the equipment.

8.5 GENERAL CLEANING PROCEDURES.

Contaminated areas may be cleaned by several methods. The primary method is fresh water flushing. Alternate methods may be used when fresh water is not available. Use the methods in Paragraph 8.6, and Paragraph 8.7 for emergency treatment of specific components. Do not use the following general methods when specific methods are available.

8.5.1 Primary Method.

WARNING

Prolonged breathing of vapors from organic solvents or materials containing organic solvents is dangerous. Prolonged skin contact with many organic solvents or solvent containing materials can have toxic effect on exposed skin areas. Observe precautions listed in previous chapters, referenced manuals, and MSDSs for cleaning compounds, solvents, surface treatment chemicals, sealants, primers, and paints.

CAUTION

Do not expose plastic or rubber items; avionic, electronic, or electrical components; wiring; or other components susceptible to heat damage to temperatures in excess of 130° F (54° C) and any/all other areas to temperatures in excess of 150° F (66° C) during emergency cleaning procedures.

NOTE

Always use the mildest cleaning cycle available that will ensure proper decontamination. Even though fresh water/detergent wash should not significantly affect accident investigations, permission must be obtained from the senior member of the appointed accident investigation board before performing this operation.

The primary method of removing salt water is as follows:

a. Immerse removed unit or component in clean, fresh water whenever possible.

b. Flush all areas with clean fresh water and allow them to drain.

c. Dry the item or areas by vacuum cleaning excess water and/or blotting with a cloth or paper towels, or blowing dry with compressed air at a pressure not greater than 10 PSI. If visual evidence of salt remains, a second cleaning should be accomplished as follows:

(1) Mix a solution of one part of MIL-PRF-87937, Type IV, or MIL-PRF-85570, Type II aircraft cleaning compound in nine parts water.

(2) Apply the solution to the affected areas and scrub with bristle brushes, sponges or cloths.

(3) Flush thoroughly with clean fresh water and drain thoroughly.

(4) Dry the item or areas as before.

d. After flushing and drying, apply MIL-C-81309, Type III, or MIL-L-87177, Type I or II, Grade B water displacing CPC/preservative on all avionic, electronic, or electrical components and connectors. Ensure that all areas and crevices are coated. Apply a liberal amount of MIL-C-81309, Type II, or MIL-L-87177, Type I or II, Grade B water displacing CPC to all other areas that cannot be properly drained or contain recesses which are difficult to reach. Ensure that all surfaces are coated.

NOTE

MIL-C-81309, Type II water displacing CPC deposits a thin, nonconductive film which must be removed for proper function of contact points and other electromechanical devices where no slipping or wiping action is involved, but MIL-C-81309, Type III, and MIL-L-87177, Type I or II, Grade B need not be removed as they do not interfere with proper function of these items. CPC is easily removed with A-A-59601, or MIL-PRF-680, Type II or III degreasing/dry cleaning solvent. Removal will be accomplished during subsequent maintenance or functional test prior to issue for use.

8.5.2 Alternate Methods. Use only when fresh water is not available or is available only in limited supply or when time prevents immediate flushing with fresh water.

8.5.2.1 Method One (preferred). Spray, brush, or wipe the exterior of the affected areas and components with liberal amounts of MIL-C-81309, Type II, or MIL-L-87177, Type I or II, Grade B water displacing CPC/preservative.

8.5.2.2 Method Two (alternate).

a. Apply a solution of one part MIL-PRF-87937, Type IV, or MIL-PRF-85570, Type II aircraft cleaning compound in nine parts water by spray, brush, or cloth.

b. Brush affected areas until contaminants and cleaner become intermixed or emulsified.

c. Wipe off thoroughly with a clean cloth, to remove both contaminants and cleaner.

d. Apply a liberal amount of MIL-C-81309, Type II, or MIL-L-87177, Type I or II, Grade B water displacing CPC to affected areas.

8.5.3 Removing O-D-1407 Potassium Bicarbonate (Purple K Powder/PKP) or Other Dry Chemical Fire Extinguishing Agents. Remove powder as follows:

a. Remove as much as possible by vacuuming.

b. Use a soft bristle brush and air pressure not greater than 10 PSI to dislodge contaminants between close-fitting components.

c. Vacuum clean again.

d. Remove the residual film of dry powder adhering to the surface by wiping, brushing, or spraying with a solution of one part of MIL-PRF-87937, Type IV, or MIL-PRF-85570, Type II aircraft cleaning compound in nine parts of water.

e. Rinse thoroughly with fresh water.

f. Dry with cloths or paper towels and/or blow dry with dry, oil free compressed air at a pressure not greater than 10 PSI.

g. Apply a liberal amount of MIL-C-81309, Type II or MIL-L-87177, Type I or II, Grade B water displacing CPC to the affected area.

h. Enter a notation defining the affected areas and where and how they were treated in the appropriate aircraft, missile, or equipment forms with a requirement for a special inspection as corrosion prone areas at a specified future time to determine if any corrosion has occurred.

8.5.4 Removing MIL-F-24385 Aqueous Film Forming Foam (AFFF) Fire Extinguishing Agent. To remove residues of burned materials and fresh water solutions of AFFF, use the following procedure:

NOTE

- AFFF and fresh water mixtures usually do not present a corrosion problem, but cleanup of residues of burned materials after a fire is required for corrosion prevention.
- Enter a notation defining areas and components that are exposed to residue from burned materials and MIL-F-24385 AFFF fire extinguishing agent in the appropriate aircraft, missile, or equipment forms with a requirement for a special inspection as corrosion prone areas or components at a specified future time to determine if any corrosion has occurred.

a. Flush all affected areas with fresh, clean water while draining at the same time. Whenever possible, units or components which have been removed, should be immersed in fresh water and then flushed thoroughly with fresh, clean water. Drain away the water.

b. Clean surfaces with a solution of one part MIL-PRF-87937, Type IV, or MIL-PRF-85570, Type II aircraft cleaning compound in nine parts of water. Scrub affected areas and rinse with clean, fresh water. Drain away excess water.

c. Dry with cloths, paper towels, and/or dry, oil free compressed air at a pressure not greater than 10 PSI.

d. Apply MIL-C-81309, Type III, or MIL-L-87177, Type I or II, Grade B water displacing CPC to all avionic components and electrical connectors. Apply a liberal amount of MIL-C-81309, Type II, or MIL-L-87177, Type I or II, Grade B water displacing CPC to all other areas that cannot be properly drained or contain recesses which are difficult to reach.

e. Enter information on affected areas and/or components in the appropriate aircraft, missile, or equipment forms per the instructions in the above NOTE.

8.5.5 Removal of Carbon Dioxide (CO_2), HFC-125, or Halon Fire Extinguishing Agents. CO_2, HFC-125 (Pentafluoroethane), Halon 1211 (MIL-DTL-38741, Bromochlorodifluoromethane), and Halon 1301 (ASTM D5632, Bromotrifluoromethane) evaporate rapidly. Therefore, no cleanup is required unless moisture or a high temperature was present at the area of application; but ventilation should always be provided to remove the vapors. If moisture or high temperature was present, use the following clean up procedures for Halon materials:

NOTE

Even though carbon dioxide or Halon fire extinguishing agents leave no residues; smoke, smudges, or other grime from a fire should be removed from affected items that are to be retained for future use.

a. After a fire has been extinguished, purge area and surfaces with clean, dry air (dust and oil free, low moisture content, compressed air).

b. Clean surfaces with a solution of one part MIL-PRF-87937, Type IV, or MIL-PRF-85570, Type II aircraft cleaning compound in nine parts of water. Scrub affected areas and rinse with clean, fresh water. Drain away excess water.

c. Dry with cloths, paper towels, and/or dry, oil free compressed air at a pressure not greater than 10 PSI.

d. Apply MIL-C-81309, Type III, or MIL-L-87177, Type I or II, Grade B water displacing CPC to all avionic components and electrical connectors. Apply a liberal amount of MIL-C-81309, Type II, or MIL-L-87177, Type I or II, Grade B water displacing CPC to all other areas that cannot be properly drained or contain recesses which are difficult to reach.

e. Enter a notation defining the affected areas, and where and how they were treated in the appropriate aircraft, missile, or equipment forms with a requirement for a special inspection as corrosion prone areas at a specified future time to determine if any corrosion has occurred.

8.5.6 Removal of Protein Type Foam and Soda-Acid Fire Extinguishing Agents. The residues left from the use of these materials can be very corrosive to aircraft, missiles, and equipment. Remove these residues as follows:

a. Thoroughly flush the affected area with fresh water. Ensure that the rinse water is completely flushed from the aircraft, missile, or equipment.

b. Clean surfaces with a solution of one part of MIL-PRF-87937, Type IV, or MIL-PRF-85570, Type II aircraft cleaning compound in nine parts of water. Scrub affected areas and rinse with clean, fresh water. Drain away excess water.

c. Dry with cloths, paper towels, and/or dry, oil free compressed air at a pressure not greater than 10 PSI.

d. Apply MIL-C-81309, Type III, or MIL-L-87177, Type I or II, Grade B water displacing CPC to all avionic components and electrical connectors. Apply a liberal amount of MIL-C-81309, Type II, or MIL-L-87177, Type I or II, Grade B water displacing CPC to all other areas that cannot be properly drained or contain recesses which are difficult to reach.

e. Enter a notation defining the affected areas, and where and how they were treated in the appropriate aircraft, missile, or equipment forms with a requirement for a special inspection as corrosion prone areas at a specified future time to determine if any corrosion has occurred.

8.5.7 Treatment After Landing on a Foamed Runway. Materials used to foam runways are corrosive to aircraft. As soon as possible after a landing on a foamed runway, exterior areas, wheel wells, any interior areas exposed, and engines shall be cleaned. Clean the exterior and wheel wells, interior areas, and engines in accordance with Section I of Chapter 3.

8.5.8 Treatment After Exposure to Volcanic Ash. The primary concern in removing volcanic ash is the extreme abrasiveness of the ash. It is not a significantly corrosive material. Aircraft, missiles, and equipment which have been exposed to volcanic ash should be cleaned using the following procedures before the next aircraft, missile, or equipment operation:

a. All static ports, fuel vents, engine inlets, air conditioning inlets, etc., should be vacuumed to remove as much ash as possible and then suitably covered to preclude additional ash entry. Special emphasis should be placed on ducting supplying cooling air to avionics, electronics, and electrical equipment.

b. After covering all openings where ash may enter, the exterior of the airframe, missile or equipment should have ash removed initially using a vacuum, low pressure, compressed air (not to exceed 10 PSI), or by lightly dusting with clean rags. Avoid rubbing since this may damage painted and bare metal surfaces due to the abrasiveness of the ash.

c. Wash entire aircraft, missile, or piece of equipment using a mild MIL-PRF-87937, Type IV, or MIL-PRF-85570, Type II alkaline cleaner and water solution (1 part cleaner to 9 parts water) using procedures in Section I of Chapter 3 and rinse thoroughly with low pressure water. Ensure that critical parts, such as flap screws, tracks, and exposed hydraulic actuators are adequately cleaned. Again, caution should be taken when washing to avoid vigorous rubbing/scrubbing, since ash is even more abrasive when combined with water to form a slurry.

d. Check windshield wiper blades to ensure that all contaminants are removed prior to operation.

e. If ash penetration is evident in the aircraft interior (the cockpit, cargo area, avionics compartments, and other accessible interior areas) or interior areas and compartments of missiles and equipment; they should be thoroughly vacuumed.

f. Check lower aircraft, missile, and/or equipment structures for volcanic matter and water entrapment.

g. Clear all drains and air dry structures as much as possible.

h. Uncover all openings which were covered during step a.

i. After washing, the aircraft, missile, or piece of equipment must be lubricated in accordance with applicable system peculiar maintenance manuals.

8.6 SPECIFIC INTERNAL AREAS.

The cockpit, ejection seats, avionic and electrical equipment, identification and modification plates, and photographic equipment require specific emergency cleaning procedures.

8.6.1 Aircraft Cockpit Area. Emergency cleaning procedures for the aircraft cockpit are as follows:

a. If the interior is undrainable, drill out a few fasteners at low points. If still undrainable, drill holes at low points as approved and directed by the aircraft SPD.

b. Remove avionics equipment, relay boxes, circuit breakers and switches, and clean as specified in TO 1-1-689.

c. Clean ejection seats (refer to Paragraph 8.6.2).

d. Turn equipment over to the activity that has the authority and capability to disassemble, clean, and repair the equipment.

e. Dry equipment that has been cleaned as much as possible with dry, oil free compressed air at a pressure less than 10 PSI, drying machines, electric fans, or hand fans in a hot room of 150° F (66° C) maximum or in a well ventilated room where the humidity is low.

f. Apply MIL-C-81309, Type II, or MIL-L-87177, Type I or II, Grade B water displacing CPC by spraying or brushing onto all areas that cannot be properly drained or contain recesses which are difficult to reach.

8.6.2 Aircraft Ejection Seats.

WARNING

Disarm ejection seat mechanism before cleaning. Ensure that only authorized personnel disarm seats and perform cleaning operations.

The following emergency cleaning procedure shall be used for cleaning aircraft ejection seats:

a. Remove parachutes, drogue parachutes (where applicable), and seat pans. Return them to the local survival equipment work center for cleaning and/or replacement.

b. Remove ejection seat in accordance with the applicable system peculiar maintenance manual.

c. Rinse seat thoroughly with fresh water. Continue rinsing while directing water into crevices and close fitting parts until contaminants are removed.

d. Wipe down cartridge activated devices, rockets, and inertia reels with fresh water. Disarm and remove from seats. Cap all gas lines and ports.

e. Remove as much water as possible from equipment with vacuum or low pressure, clean, dry, oil free compressed air.

f. Dry off any remaining water with a clean cloth or paper towels.

g. Apply MIL-C-81309, Type II, or MIL-L-87177, Type I or II, Grade B water displacing CPC by either spray or brush application to critical metal surfaces and recess areas which may not be completely dry. Water displacing CPC protects equipment during necessary inspections and/or inquiry and during transfer to the local survival equipment work center.

h. Wash all survival gear and pilot safety equipment with fresh water and dry thoroughly. Refer to applicable system peculiar maintenance requirements for detailed preservation procedures. Lubricate and apply CPC's in accordance with the applicable system peculiar maintenance cards and Sections II and III of Chapter 3 in this manual.

i. If necessary, send the entire ejection seat to the appropriate ALC Depot for overhaul/repair.

j. Aircraft mounted escape system components (mechanically activated CADS) shall be wiped and dried with a clean cloth and fresh water. If internal contamination is suspected, remove and replace. Forward removed components to the appropriate ALC Depot for further disassembly, inspection, and repair.

8.6.3 Avionic, Electronic and Electrical Equipment.

WARNING

Ensure that all electrical power is disconnected and all systems in the aircraft, missile, or equipment are deactivated before starting the cleaning operation on avionics, electronic, or electrical equipment to prevent electrical shock.

Effective cleaning ensures that salt water, fire fighting chemicals, and other corrosive agents are completely removed to prevent corrosion damage. Refer to TO 1-1-689 for specific cleaning procedures.

8.6.4 Photographic Equipment. Use the following procedure for cleaning photographic equipment:

a. Immediately rinse with fresh water, drain and rinse again.

b. Apply MIL-C-81309, Type III, or MIL-L-87177, Type I, Grade B water displacing CPC by spraying.

c. Return to the appropriate photographic equipment technician for prompt servicing.

8.6.5 Graphite or Carbon Fiber/Epoxy, Boron Fiber/Epoxy, and Tungsten Fiber/Epoxy Composite Materials.

WARNING

- The inhalation of graphite, boron, or tungsten composite fibers resulting from aircraft, missile, or equipment fires and/or material damage may be harmful to personnel. Wear a cartridge type respirator and goggles when exposed to these materials, and, in addition, wear close weave cotton gloves when handling these materials. Request the assistance of the local bioenvironmental engineer and safety officer to provide specific information regarding hazards to personnel during cleanup operations involving these materials and the required PPE.
- Do not put power to or start up any aircraft, missile, piece of equipment or other avionic/electronic/electrical equipment which have been exposed to debris until decontamination by vacuuming and/or washing is completed. Failure to observe these procedures may result in electrical short circuits and fires.

CAUTION

Aircraft, missile, or equipment constructed utilizing graphite, boron, or tungsten fiber composite materials in contact with metal structures or substructures create a high potential for establishing galvanic corrosion cells. This can result in corrosion of the metal components if the structure is exposed to an electrolyte medium, such as salt water.

The graphite, boron, and/or tungsten fibers of composite materials may be released into the atmosphere if their epoxy binder burns; this occurs at temperatures in excess of 600 F (316 C). In addition, fibers may be released during an explosion or a high impact crash. Since graphite, boron, and tungsten are very conductive, these fibers can damage unprotected avionic, electronic, and electrical equipment within several miles of the incident site by settling on and shorting out electrical contacts. The procedures for treating damaged composite materials are listed below. Refer to TO 1-1-690 for additional information.

8.6.5.1 Cleanup. When damaged aircraft, missiles, or equipment have graphite, boron, or tungsten fiber composite surfaces which are broken or burned, follow these procedures:

8.6.5.1.1 If ventilation inlets are exposed to debris, take immediate action to ensure that the filtration system is properly operating. If the system is not operating properly, shut down the system and provide temporary filtration at outlets leading to compartments with electrical, avionic, and electronic equipment.

8.6.5.1.2 Warn the flight crew of adjacent in-flight aircraft and maintenance control for flight line operations that the smoke may contain hazardous electrical contaminants.

8.6.5.1.3 Spray MIL-C-81309, Type II, or MIL-L-87177, Type I, Grade B CPC on damaged composite surfaces. This will prevent the spread of graphite, boron, or tungsten fiber contamination by causing the fibers to stick together and/or to the damaged surface. Cover damaged surfaces with plastic sheet and tape it securely in place.

8.6.5.1.4 Aircraft, missiles, facilities, clothing and equipment that have been exposed to debris from the aircraft, missile, or equipment fire must be vacuumed and/or washed down prior to reuse or movement into a hanger.

8.6.5.1.5 Decontamination of the immediate area of the aircraft, missile, or equipment wreckage may require vacuuming, washing, and bagging, of composite material fragments. Use a sealed industrial vacuum and store the collected debris in sealed plastic bags for the accident investigation board. Dispose of the debris in accordance with applicable regulations when so directed by the investigation team.

8.6.5.1.6 If wrapping and secure taping of the aircraft, missile, or equipment wreckage is not possible, transporting the wreckage must be planned to bypass heavily populated and industrial areas. Aircraft, missiles, or equipment parked or located along the planned route must have their canopies and access doors closed and their engine inlet and exhaust openings, air intakes and outlets, and all other vents and ports covered. In addition, the doors and windows of surrounding buildings should be closed to minimize the probability of having wind-blown fibers enter areas containing electrical and electronic equipment.

8.7 SPECIFIC EXTERNAL AREAS OF AIRCRAFT.

The following external aircraft areas require emergency cleaning after exposure to fire and fire fighting agents.

8.7.1 Airframes. Use the following procedure for cleaning airframes:

a. Flush all areas with fresh, clean water while draining at the same time. Whenever possible, units or components that have been removed from the aircraft should be immersed in fresh water and then flushed thoroughly with clean, fresh water. Drain away the water and dry the areas with cloths, paper towels, or dry, oil free compressed air at a pressure of less than 10 PSI.

b. Clean with a solution of one part of MIL-PRF-87937, Type IV, or MIL-PRF-85570, Type II aircraft cleaner in nine parts of water. Scrub affected areas with the solution. Flush thoroughly with fresh water and drain away the excess water. Dry with cloths, paper towels, or dry, oil free compressed air at a pressure of less than 10 PSI.

c. Apply a liberal amount of MIL-C-81309, Type II, or MIL-L-87177, Type I or II, Grade B water displacing CPC by spraying or brushing to all other areas that cannot be properly drained or contain recesses which are difficult to reach, to aid in the removal of water.

d. If the aircraft fuselage, empennage, or wings are in a repairable condition, drain holes may be provided for draining water by drilling out rivets at the lowest points. All repairable parts shall be collected and returned with the aircraft when shipment is made.

8.7.2 Antennas. Remove antennas per instructions in the system peculiar aircraft and/or specific equipment maintenance manual. Treat in accordance with TO 1-1-689. Accomplish any in place cleaning as follows:

a. Check antenna insulators for damage or cracks.

b. Brush or spray a solution of one part MIL-PRF-87937, Type IV, or MIL-PRF-85570, Type II aircraft cleaning compound in nine parts water onto the antenna and the affected adjacent area, and scrub the area with a small, soft brush or wiping cloth dipped in the above cleaning solution.

c. Rinse with clean, fresh water.

d. Dry the area with a clean, dry cloth.

8.7.3 Reciprocating Engines.

a. Determine the extent of contamination.

b. Drain all fluids. Partial disassembly is authorized to accomplish thorough draining. Ensure that pressure systems and cylinders are drained.

c. Thoroughly flush all surfaces and passages with fresh water.

d. Apply A-A-59601 or MIL-PRF-680, Type II or III dry cleaning/degreasing solvent to the affected areas with a brush, cloth, or non-atomizing spray, and scrub the area with a brush or cloth.

e. Flush all accessible interior surfaces and all passages with either a solution of one part MIL-C-85704, Type II turbine engine gas path cleaning compound in four parts fresh water or use the straight undiluted form of MIL-C-85704, Type II ready to use (RTU) cleaner. Both the Type II and Type II RTU are aqueous cleaners without any hydrocarbon solvents.

f. Thoroughly rinse all areas with fresh water.

g. Allow to thoroughly drain. Dry using paper towels, cloths, or dry, oil free compressed air at a pressure of less than 10 PSI.

h. Apply a liberal amount of MIL-C-81309, Type II, or MIL-L-87177, Type I or II, Grade B water displacing CPC to all surfaces. This may be accomplished by filling and draining (preferred), flushing, or spraying. Rotate the propeller shaft to coat cylinder walls. Drain excess CPC.

i. Reassemble engine finger tight.

j. Lubricate any pressure lubrication points to displace all contaminated lubricant.

k. For shipping, place engine in an approved dehydrated metal container, using twice the normal amount of desiccant. Notify the engine SPM to arrange for special handling as required.

8.7.4 Turbine Engines. Engines which are contaminated with small amounts of sea water entering the intake shall be cleaned using MIL-PRF-85704 engine gas path cleaner in accordance with Table 3-2 and the engine system peculiar technical/overhaul manuals. Decontaminate engines that have been completely submerged in fresh water or sea water as follows:

a. Drain all fluids. Partial disassembly is authorized to accomplish thorough draining.

b. Thoroughly flush all surfaces and passages with fresh water.

c. Flush all accessible interior surfaces and all passages with either a solution of one part MIL-PRF-85704, Type II turbine engine gas path cleaning compound in four parts fresh water or use the straight undiluted form of MIL-C-85704, Type II RTU cleaner. Both Types II and II RTU are aqueous cleaners without any hydrocarbon solvents.

d. Thoroughly rinse all areas with fresh water.

e. Drain thoroughly.

f. Apply a liberal amount of MIL-C-81309, Type II, or MIL-L-87177, Type I or II, Grade B water displacing CPC to all surfaces. This may be accomplished by filling and draining (preferred), flushing, or spraying. Drain excess CPC. Repeat this procedure until all traces of water have been removed.

g. Lubricate any pressure lubrication points to completely displace all contaminated lubricant.

h. For shipping, install in an approved dehydrated metal container, using twice the normal amount of desiccant. Notify the engine SPM to arrange for special handling as required.

8.7.5 Treatment for Engines Which Have Ingested Fire Extinguishing Powder (Purple K/PKP or Sodium Bicarbonate).

a. With the ignition off/disconnected, vacuum up as much of the loose powder as possible followed by cranking the engine and rinsing it thoroughly with water.

b. Wash the engine with MIL-PRF-85704 gas path cleaner per instructions in Table 3-2.

c. Flush all accessible interior surfaces and all passages with either a solution of one part MIL-PRF-85704, Type II turbine engine gas path cleaning compound in four parts fresh water or use the straight undiluted form of MIL-C-85704, Type II RTU cleaner. Both Types II and II RTU are aqueous cleaners without any hydrocarbon solvents.

d. Drain engine lubricant/oil and refill.

e. At the next inspection, recheck previously contaminated areas and repeat the above procedure, if necessary.

8.7.6 Helicopter Transmission, Rotor Head, and Rotor Hub. Helicopter transmission, rotor head, and rotor hub cases are often constructed of magnesium. Magnesium parts exposed to salt water or fire fighting chemicals require immediate and thorough decontamination and preservation.

8.7.6.1 External Surface Contamination. Treat helicopter transmissions, rotor heads, and rotor hubs with external surface contamination as follows:

a. Rinse with fresh water.

b. Wash with a solution of one part MIL-PRF-87937, Type IV, or MIL-PRF-85570, Type II aircraft cleaning compound in nine parts fresh water or use MIL-C-43616, Class 1A aerosol type solvent emulsion aircraft cleaner per instructions in Section I of Chapter 3, and rinse thoroughly.

c. Apply a liberal amount of MIL-C-81309, Type II, or MIL-L-87177, Type I, or II, Grade B, water displacing CPC to all affected areas by spraying or brushing.

d. Lubricate all pressure lubrication points to displace all contaminated lubricant.

8.7.6.2 Internal Surface Contamination. If internal surface contamination of helicopter transmissions, rotor heads, and gearboxes is suspected, immediately contact the appropriate helicopter SPD for assistance with decontamination procedures. Treat helicopter transmissions, rotor heads, rotor hubs, and gear boxes having internal contamination as follows:

a. Drain all fluids. Partial disassembly is authorized to accomplish thorough draining. Ensure that pressure systems are drained.

b. Thoroughly flush all surfaces and passages with fresh water.

c. Flush all surfaces and passages with a solution of one part MIL-PRF-87937, Type IV, or MIL-PRF-85570, Type II aircraft cleaning compound in nine parts fresh water per instructions in Section I of Chapter 3.

d. Thoroughly rinse all areas with fresh water.

e. Allow to drain thoroughly.

f. Apply a liberal amount of MIL-C-81309, Type I, or MIL-L-87177, Type I or II, Grade B water displacing CPC to all surfaces. This may be accomplished by filling and draining (preferred), flushing, or spraying. With the housing full of preservative, rotate the main shaft approximately five revolutions. After the preservative has remained in the housing for four hours, drain, and replace plugs.

g. Service the transmission, rotor head, rotor hub, and/or gear box in accordance with the applicable system peculiar maintenance manual if going back in service or leave as preserved if the unit will be shipped out.

h. Lubricate all pressure lubrication points to displace all contaminated lubricant.

8.7.7 Helicopter Main and Tail Rotor Blades. Helicopter blades that have been exposed to an excessive amount of salt water or to liquid fire fighting chemicals shall be treated as follows:

NOTE

Some rotor blades have areas commonly known as pockets or blade boxes with very small drain holes. The drain holes may require enlargement, if blades were salt water immersed, to facilitate decontamination of the blade spar. Enlarging drain holes destroys the affected pockets or blade boxes and requires Depot Level repair before the blade can be reused. Enlargement of pocket access openings requires authorization from the appropriate helicopter SPD and blade SPM for each blade involved. Where possible, flush pockets with MIL-C-81309, Type II, or MIL-L-87177, Type II, Grade B water displacing CPC. Preserve and package the blade properly before sending it to the appropriate ALC Depot for engineering evaluation and necessary repair.

a. Thoroughly flush all contaminated surfaces with fresh water. Pay particular attention to recesses that tend to trap debris such as mud, dirt, or salt deposits.

b. Wash with a solution of one part MIL-PRF-87937, Type IV, or MIL-PRF-85570, Type II aircraft cleaning compound in nine parts fresh water per instructions in Section I of Chapter 3.

c. Rinse thoroughly with fresh water.

d. Dry with a cloth, paper towels or dry, oil free compressed air at a pressure of less than 10 PSI.

8.7.8 Armament. The following instructions are for initial treatment of armament equipment that has undergone salt water immersion or been subjected to fire extinguishing chemicals.

8.7.8.1 Safety Precautions. Before performing any cleaning chores, make certain that preliminary safety precautions are followed:

a. Ensure that the aircraft, missile or piece of equipment is safe for maintenance.

b. Disconnect all electrical power and ensure that all armament switches are in the OFF or SAFE positions.

NOTE

For removal of armament equipment, refer to applicable system peculiar maintenance/technical manual for the respective aircraft, missile, or piece of equipment.

c. Remove all ordnance from the aircraft or piece of equipment, and all warheads from the missile and properly dispose of contaminated ammunition and warheads as required.

8.7.8.2 Cleaning Procedure. After complying with the safety precautions, clean per the following procedure:

a. Rinse equipment with fresh water.

b. Disassemble as required and wipe away excess grease with clean cloth dampened with A-A-59601 or MIL-PRF-680, Type II or III dry cleaning/degreasing solvents.

c. Immerse and agitate parts in a solution of one part MIL-PRF-87937, Type IV, or MIL-PRF-85570, Type II aircraft cleaning compound in nine parts of fresh water.

d. Rinse parts with fresh water to ensure complete removal of contaminants.

e. Wipe away excess water with clean, dry cloth.

f. Blow dry the cleaned equipment/parts as thoroughly as possible with clean, dry, oil free compressed air at a pressure of less than 10 PSI.

g. Inspect the equipment to determine whether it should be returned to service or forwarded to the appropriate ALC Depot for overhaul or repair.

h. Apply a liberal amount of MIL-C-81309, Type II, or MIL-L-87177, Type I or II, Grade B water displacing CPC by either spray, brush, dip, or fill and drain application.

i. If shipment to the prime ALC Depot for maintenance is required, wrap the equipment in MIL-PRF-131, Class 1 barrier material, package it per the applicable instructions, and forward it to the depot as directed.

8.7.9 Aircraft Fuel Systems. For emergency treatment of aircraft fuel systems contaminated with water through other than a water crash or fire damage, refer to TO 1-1-3

APPENDIX A
CONSUMABLE MATERIALS

A.1 INTRODUCTION.

Table A-2 provides consumable materials used for aircraft, missile, and equipment cleaning and corrosion prevention and control. Nomenclatures, specifications/part numbers, national stock numbers, units of issue, and intended use of materials are provided. Items are located by function in the following groupings:

- Abrasives
- Conversion coating materials
- Cleaning compounds
- Cleaning pads/cloths
- Corrosion preventive compounds
- Lubricants
- Neutralizing agents
- Protective materials
- Sealants and sealant accessories
- Solvents

A.1.1 Shelf Life. Shelf life and its extension data (given in months) for materials that have a shelf life are provided in AFMAN 23-110 and the Shelf-Life Extension Data (SLED) Program managed by WR-ALC/MADL at Robins AFB, GA (HQ USAF/SLED; DSN 468-4005 or COM (478) 926-4005; FAX same prefixes and -1276; email douglas.summate@robins.af.mil). TO42C-1-12 covers quality control procedures for chemical materials.

A.1.2 Consumable Materials Containers. Consumable materials of a particular specification are provided in various sized containers. If the particular sized container required is not available or listed, ask supply department to provide the next size container under the same specification.

A.1.3 Local Purchase. When local purchase is specified, include all procurement information, source of supply and GSA contract number available.

A.1.4 Local Environmental Laws and Regulations. Prior to the procurement/use of any of specified products for cleaning, corrosion prevention, touch-up painting, etc., determine and comply with all local environmental requirements, i.e., laws and regulations.

A.1.5 Units of Issue Codes. The units of issue codes in the unit issue column and their meaning are as follows in Table A-1:

Table A-1. Units of Issue Codes

CODE	UNIT	CODE	UNIT	CODE	UNIT
BG	Bag	EA	Each	PG	Package
BO	Bolt	FT	Foot	PR	Pair
BT	Bottle	GL	Gallon	PT	Pint
BX	Box	GR	Gross	QT	Quart
CA	Cartridge	JR	Jar	RO	Roll
CB	Carboy	KG	Kilogram	SE	Set
CC	Cubic Cent.	KT	Kit	SH	Sheet
CN	Can	L	Liter	TU	Tube
CO	Container	LB	Pound	YD	Yard
CS	Case	LG	Length		
DR	Drum	MX	Thousand		
DZ	Dozen	OZ	Ounce		

Table A-2. Consumable Materials

Item No	Nomenclature	Specification/Part Number	National Stock Number	Unit of Issue	Intended Use
			Abrasives		
1	Abrasive Mats, Aluminum Oxide, Non-woven, Non- metallic	A-A-58054 (supersedes MIL-A-9962) Type I, Class 1 (9 x 11 in SH)			Aluminum oxide impregnated nylon fiber webbing used for removing corrosion products and for paint scuffing and feathering edges prior to touching up.
		Grade A (Very Fine)	5350-00-967-5089	PG (10 SH)	
		Grade B (Fine)	5350-00-967-5093	PG (10 SH)	
		Grade C (Medium	5350-00-967-5092	PG (10 SH)	
2	Abrasive Paper, Aluminum Oxide, Non-waterproof	(9 x 11 in SH)			Dry sanding to remove light to moderate corrosion products.
		240 Grit	5350-00-829-3981	PG (50 SH)	
		180 Grit	5350-01-322-1122	PG (50 SH)	
3	Abrasive Paper, Silicon Carbide, Waterproof	ANSI B74.18 (supersedes A-A-1047) (9 x 11 in SH)			Wet or dry sanding to remove light to moderate corrosion products.
		180 Grit	5350-00-721-8117	PG (50 SH)	
		240 Grit	5350-00-224-7205	PG (50 SH)	
		320 Grit	5350-01-043-2278	PG (50 SH)	
4	Abrasive Paper, Silicon Carbide, Non-waterproof	220 Grit	5350-00-224-7209	PG (50 SH)	Dry sanding to remove light to moderate corrosion products.
		320 Grit	5350-00-867-7665	PG (50 SH)	
5	Abrasive Paper Discs, Pressure Sensitive Backing, Silicon Carbide	ANSI B74.18 (supersedes A-A-2697) (6 in D disc)			Dry sanding to remove light to moderate corrosion products. For use with pneumatic drills or orbital sanders with a 6 inch diameter pad.
		180 Grit	5345-01-074-9404	RO (250 EA)	
		280 Grit	5345-01-074-9406	RO (250 EA)	
6	Abrasive Cloth, Aluminum Oxide, Waterproof	ANSI B74.18 (supersedes A-A-1048) (9 x 11 in SH)			Wet or dry sanding to remove light to moderate corrosion products.
		240 Grit	5350-00-865-5948	PG (25 EA)	
		320 Grit	5350-00-597-5798	PG (25 EA)	
7	Abrasive Cloth, Aluminum Oxide, Non-waterproof	ANSI B74.18 (supersedes A-A-1048)			Dry sanding to remove light to moderate corrosion products.
		180 Grit (9 x 11 in SH)	5350-00-192-5051	PG (50 EA)	
		180 Grit (3 x 150 ft RO)	5350-00-229-3095	RO (50 YD)	
		240 Grit (9 x 11 in SH)	5350-00-161-9715	PG (50 EA)	
		240 Grit (3 x 150 ft RO)	5350-00-229-3080	RO (50 YD)	
		320 Grit (9 x 11 in SH)	5350-00-246-0330	PG (50 EA)	
		320 Grit (2 x 150 ft RO)	5350-00-187-6289	RO (50 YD)	

Table A-2. Consumable Materials - Continued

Item No	Nomenclature	Specification/Part Number	National Stock Number	Unit of Issue	Intended Use
		320 Grit (3 x 150 ft RO)	5350-00-229-3092	RO (50 YD)	
8	Abrasive Cloth, Silicon Carbide, Non-waterproof	ANSI B74.18 (supersedes A-A-1200)			Dry sanding to remove light to moderate corrosion products.
		180 Grit (9 x 11 in SH)	5350-00-559-7778	PG (50 SH)	
		240 Grit (9 x 11 in SH)	5350-00-297-6670	PG (50 SH)	
		240 Grit (2 x 150 ft RO)	5350-00-256-5162	RO (50 YD)	
		320 Grit (2 x 150 ft RO)	5350-00-482-5585	RO (50 YD)	
9	Aluminum Wool	A-A-1044			Removing corrosion from aluminum alloy surfaces.
		Type II, Class 1, Form A (Medium)	5350-00-286-4851	RO (1 LB)	
		Type II, Class 3, Form A (Fine)	5350-00-312-6129	RO (1 LB)	
10	Copper Wool	A-A-1044			Removing corrosion from copper alloy, bronze, and brass surfaces.
		Type I, Class 3 (Fine)	5350-00-255-7736	RO (1 LB)	
11	Steel Wool, Stainless	A-A-1043			Removing corrosion from stainless steel surfaces.
		Type IV, Class 1	5350-00-440-5035	RO (1 LB)	
12	Glass Bead Media, Cleaning and Peening	SAE AMS 2431 (AMS 2431/6= AGB-6) (supersedes MIL-G-9954; Size 13)			Glass bead blasting media used for removing corrosion from aluminum surfaces by abrasive blasting.
			5350-00-576-9634	BG (50 LB)	
13	Pumice Abrasive, Powder SS-P-821, Grade FFF	5350-00-161-9034	CN (5 LB)		Removing stains or corrosion on thin metal surfaces.
	Chemical Conversion Coating, Corrosion Removal, and Surface Treatment Materials				
14	Corrosion Removing Compound for Aircraft Surfaces	SAE AMS 1640 (supersedes MIL-C-38334)			A concentrated phosphoric acid solution mixed 1:1 with water used on aluminum alloy surfaces to remove surface corrosion/oxidation and corrosion products from corrosion pits in conjunction with A-A-58054 nylon abrasive mats. It is used to remove the oxide film from aluminum alloy surfaces prior to application of a chromate conversion coating during painting operations.
			6850-00-527-2426	CN (5 GL)	
			6850-00-300-9008	DR (55 GL)	

Table A-2. Consumable Materials - Continued

Item No	Nomenclature	Specification/Part Number	National Stock Number	Unit of Issue	Intended Use
15	Chemical Conversion Materials for Aluminum and Aluminum Alloys	MIL-DTL-81706 (supersedes MIL-C-81706) Class 1A, Form III (ready to use premixed liquid)	8030-00-142-9272	CN (1 PT)	Treatment of clean, bare aluminum and aluminum alloys to impart a protective chromate coating.
15 Cont.		Usable for application Method B-brush	8030-00-065-0957	CN (1 QT)	
		Form II (powder)	8030-00-823-8039	CN (1 GL)	Class 1A coatings provide maximum protection against corrosion when left unpainted and superior adhesion when paint systems are applied.
		Usable for application Methods A, B, or C - spray, brush, or immersion	8030-01-429-9504	DR (55 GL)	Powder forms (Forms II and V) have an indefinite shelf life until mixed with deionized (DI) water.
		Form IV (ready to use premixed liquid; thixotropic solution)	8030-00-057-2354	JR (4 OZ)	
		Usable for application Method B-brush	8030-00-926-9131	CO (5 LB)	Class 3 coatings are intended for use as a corrosion preventive film for electrical and electronic applications where lower resistance contacts are required.
		Form V (powder-premeasured amount for thixotropic solutions)	8030-00-720-9739	CN (12 LB)	
		Suitable for application Method B- brush	8030-00-663-9847	DR (175 LB)	
	Touch-N-Prep (TNP) Pen with Alodine 1132	Form VI (ready to use premixed liquid in self contained applicator device)	8030-01-043-7644	CN (5 GL)	
		Suitable for application Method D-touch up applicator pen	8030-01-069-3030	JR (1 QT)	Forms IV and V are thixotropic solutions suitable for brush application (Method B) on vertical and overhead aluminum alloy surfaces and titanium alloy surfaces
		Class 3	8030-01-460-0246	CS (12 EA)	These applicator pens provide a clean, easy, ready-to-use method for application of MIL-DTL-81706 (MIL-C-81706), Class 1A chemical conversion coating materials to aluminum alloys in touch-up operations. The treated surfaces do not require rinsing or wipe off.
15 Cont.		Form III (ready to use premixed liquid) Suitable for application Method B-brush	8030-01-451-0284	CN (1GL)	

Table A-2. Consumable Materials - Continued

Item No	Nomenclature	Specification/Part Number	National Stock Number	Unit of Issue	Intended Use
16	Chemical Conversion Materials for Aluminum and Aluminum Alloys (non-ferricyanide catalyzed)	MIL-DTL-81706 (supersedes MIL-C-81706), Class 1A & 3			Non-ferricyanide conversion coating for the treatment of clean, bare aluminum alloy surfaces to impart a chromate coating where ferricyanide materials cause problems for the local waste disposal/treatment (sewer) system.
		Alodine 600, Class 1A, Form II, Method B-brush	8030-00-811-3723	BT (2 LB)	
		Alodine 600, Class 3, Form II, Method B-brush	8030-01-018-2838	CO (10 LB)	
		Turcoat Alumigold, Class 1A, Form II, Method B-brush	8030-01-341-8609	CB (125 LB)	
17	Magnesium Alloy, Processes for Pretreatment and Preven-tion of Corrosion On (Dow #19 process)	SAE AMS-M-3171 (supersedes MIL-M-3171) Type VI (chromic acid brush-on treatment)	8030-00-764-6176	CO (1QT)	Treatment of clean, bare magnesium and its alloys to impart a protective chromate coating using this DOW #19 premixed ready to use chromium trioxide and calcium sulfate mixture. The instructions for preparing this solution from powders (Chromium Trioxide and Calcium Sulfate) -listed in Item #'s 18 and 19) on site can be found in Chapter 5, Section II of this manual.
18	Chromium Trioxide, Technical (Chromic Acid)	A-A-55827 (supersedes O-C-303)	6810-00-264-6517	CN (5 LB)	One of two chemicals used to prepare a magnesium conversion coating solution (SAE AMS-M-3171, Type VI) per Chapter 5, Section II of this manual.
19	Desiccant, Calcium Sulfate, Anhydrous, Technical	O-D-210	6810-00-242-4066	CN (1 LB)	One of two chemicals used to prepare a magnesium conversion coating solution (SAE AMS-M-3171, Type VI) per Chapter 5, Section II of this manual.

Table A-2. Consumable Materials - Continued

Item No	Nomenclature	Specification/Part Number	National Stock Number	Unit of Issue	Intended Use
20	Corrosion Removing and Metal Conditioning Compound (Phosphoric Acid Base)	MIL-C-10578			A concentrated phosphoric acid solution which is diluted with water and used to remove corrosion/rust from ferrous metal surfaces and slightly etch the surface of ferrous and some non-ferrous surfaces to promote adhesion of paint systems and CPC's. Types I & II are used for rust removal from ferrous metals after heavy, encrusted rust is removed mechanically and as a surface conditioner for ferrous and some non-ferrous metal surfaces prior to painting or CPC application. Type I removes more rust and requires rinsing with water, while Type II is wiped off with clean rags. Type III is used to remove rust from chromium plated steel surfaces. Type V is used to remove rust from ferrous metal parts immersed in a dip tank after all grease and oil have been cleaned from the surfaces.
		Type I (Wash-off)	6850-00-270-5551	BT (1 GL)	
			6850-00-656-1291	DR (5 GL)	
			6850-00-926-5298	DR (15 GL)	
		Tank) Type II (Wipe-off)	6850-00-174-9672	BT (1 GL)	
			6850-00-656-1292	DR (5 GL)	
		Type III (Inhibited)	6850-00 854-7952	DR (5 GL)	
		Type V (Immersion	6850-01-107-2551	CO (4 GL)	
			6850-00-551-9577	DR (15 GL)	
					CAUTION Do not use these materials on high strength steel parts as they can cause hydrogen embrittlement.
			Cleaning Compounds		
21	Cleaning Compound: Aircraft, Exterior	MIL-PRF-85570			
		Type I (General purpose, aromatic solvent based)	6850-01-237-7482	CN (5 GAL)	Cleaning of painted and unpainted aircraft, missile, and equipment surfaces. Check for regulatory compliance before using Type I because it contains aromatic solvents.
			6850-01-237-8003	DR (15 GAL)	
			6850-01-237-8004	DR (55 GAL)	
		Type II (General purpose, non-solvent based)	6850-01-239-0571	GL (1 GAL)	Cleaning of painted and unpainted aircraft, missile, and equipment surfaces. Water based formula may be used on both high gloss and camouflage paint systems.
			6850-01-235-0872	CN (5 GAL)	
			6850-01-248-9828	DR (15 GAL)	
			6850-01-236-0128	DR (55 GAL)	

Table A-2. Consumable Materials - Continued

Item No	Nomenclature	Specification/Part Number	National Stock Number	Unit of Issue	Intended Use
		Type III (Abrasive spot cleaner)	6850-01-232-9164	CN (5 GL)	Use on high gloss paint scheme coatings to remove stubborn contaminants such as boot marks and smudges as well as gun blast and exhaust track soil.
21 Cont.		Type IV (Rubberized spot cleaner)	6850-01-235-0873	CN (5 GAL)	Use on low gloss, camouflage paint scheme coatings to remove stubborn contaminants such as boot marks and smudges as well as gun blast and exhaust track soil.
			6850-01-248-9829	DR (15 GAL)	
			6850-01-248-9830	DR (55 GAL)	
		Type V (Gel-type cleaner)	6850-01-234-0219	CN (5 GAL)	Cleaning of wheel wells, wing butts, and other areas where complete rinsing with water can be tolerated. Thixotropic cleaner clings to vertical or overhead surfaces.
			6850-01-248-9831	DR (15 GAL)	
			6850-01-235-7458	DR (55 GAL)	
22	Cleaning Compound, Aerospace Equipment	MIL-PRF-87937			
		Type I (Terpene based, solvent emulsion , water dilutable)	6850-01-390-7808	CN (1 GL)	Terpene based. Good general cleaner for heavily soiled camouflage and high gloss painted areas and unpainted metal surfaces. Requires adequate ventilation and complete rinsing of entrapment areas. May require aircraft SPD and/or missile or equipment SPM approval before it is used.
			6850-01-390-7811	CN (5 GL)	
			6850-01-390-7816	DR (55 GL)	
			6850-01-461-0065	BT (24 OZ) Spray Trigger	
		Type II (Water dilutable cleaning compound)	6850-01-390-7827	CN (1 GL)	At present, this is the primary general cleaner for camouflage and gloss painted and unpainted metal surfaces on aircraft, missiles, and equipment. It will be deleted in 2005 and replaced entirely by the Type IV cleaner.
			6850-01-339-5227	CN (5 GL)	
			6850-01-339-5228	DR (55 GL)	
		Type III (Gel type cleaning compound)	6850-01-390-9530	CN (5 GL)	Viscous, thixotropic gel cleaner for very heavily soiled areas such as aircraft control surface and wheel wells where a long dwell time is required. Use only in areas that tolerate heavy rinsing.
			6850-01-390-9453	DR (55 GL)	

Table A-2. Consumable Materials - Continued

Item No	Nomenclature	Specification/Part Number	National Stock Number	Unit of Issue	Intended Use
22 Cont.		Type IV (Heavy duty, water dilutable cleaning compound)	6850-01-429-2368	CN (1 GL)	Heavy duty cleaner equally suited for heavily soiled areas and as a general cleaner for cleaning camouflage and gloss painted and bare metal surfaces of aircraft, missiles, and equipment. In 2005, it will completely replace Type II cleaner.
			6850-01-433-0873	CN (5 GL)	
			6850-01-429-2371	DR (55 GL)	
			6850-01-461-0060	BT (24 OZ) Spray Trigger	
			6850-01-461-0070	CN (16 OZ) Aerosol	
23	Cleaning Compounds, Aircraft Surface	MIL-C-43616 Class 1 (liquid)	6850-01-045-7929	CN (5 GL)	A solvent emulsion type cleaner for removal of oily and greasy soils. The Class 1A aerosol material is an excellent spot cleaner for these types of soils.
			6850-01-045-7930	DR (15 GL)	
			6850-01-045-7931	DR (55 GL)	
		Class 1A (liquid / aerosol)	6850-01-005-5305	CN (16 OZ) Aerosol	
24	Cleaning Compound: Engine Gas Path Cleaner	MIL-PRF-85704			Removes accumulated salt, dirt, and oily residues from the gas path of engines.
		Type I (Solvent emulsion cleaner concentrate w/hydrocarbon solvent)	6850-00-181-7594	CN (5 GL)	Solvent concentrate for cleaning the compressor section of gas turbine engines (engine off-line; starter cranked).
			6850-00-181-7597	DR (55 GL)	
		Type II (Aqueous cleaner concentrate)	6850-01-372-8303	CN (5 GL)	Aqueous concentrate for cleaning the compressor section of gas turbine engines (engine off-line; starter cranked).
			6850-01-372-8304	DR (55 GL)	
		Type II RTU (Ready-To-Use)	6850-01-370-5245	CN (5 GL)	Ready to use aqueous cleaner for cleaning gas turbine engines (engine off-line; starter cranked).
			6850-01-370-5244	DR (55 GL)	
		Type III (Aqueous cleaner concentrate w/o hydrocarbon solvent)	6850-01-433-6436	CN (5 GL)	Aqueous concentrate. With no hydrocarbon solvents for on-line (fired) cleaning of gas turbine engines IAW specific engine maintenance instructions.
			6850-01-433-6438	DR (55 GL)	
24 Cont.		Type III RTU (Ready-To-Use)	6850-01-472-1845	CN (5 GL)	
			6850-01-472-1846	DM (55 GL)	

Table A-2. Consumable Materials - Continued

Item No	Nomenclature	Specification/Part Number	National Stock Number	Unit of Issue	Intended Use
25	Cleaning Compound, for Parts Washers and Spray Cabinets	MIL-C-29602 (SAE AMS-C-29602)			Detergent for use in parts washers and spray cabinets to clean aviation weapons systems, engine, and support equipment components. Removes grease, oil, and dirt which are present on disassembled components.
		Type I (Water soluble liquid concentrate)	6850-01-431-2269 6850-01-431-2267 6850-01-431-2268	CN (1 GAL) CN (5 GAL) DR (55 GAL)	
25 Cont.		Type II (Water soluble powder) **THE MATERIALS LISTED BELOW ARE APPROVED FOR USE ON LANDING GEAR COMPONENTS AND IVD COATED HIGH STRENGTH STEEL PARTS**	6850-01-053-2789	CO (1 LB)	**CAUTION** Do not use these cleaners on aircraft landing gear components, wheels, and brakes, or any IVD aluminum coated high strength steel parts as they may cause hydrogen embrittlement. Use only materials approved by and listed on the latest revision of AF Drawing # 9825019 on aircraft landing gear components, wheels, and brakes, and on any other IVD aluminum coated high strength steel parts.
			6850-01-431-9025	CO (50 LB)	
25 Cont.			6850-01-431-9024	DR (400 LB)	
		(Zip Chemical Products Co; Cage Code # 1KQX9)			
		PN Calla-296 (Concentrated emulsify-ing type liquid cleaner)	6850-01-485-5972 6850-01-485-5932 6850-01-485-5950	CO (1 GL) CO (5 GL) DR (55 GL)	
		PN Calla 602LF (Concentrated non-emulsifying type liquid cleaner)	6850-01-513-5230 6850-01-513-5237 6850-01-513-5233	CO (1 GL) CO (5 GL) DR (55 GL)	

Table A-2. Consumable Materials - Continued

Item No	Nomenclature	Specification/Part Number	National Stock Number	Unit of Issue	Intended Use
26	Deicing/Anti-Icing Fluid, Aircraft, SAE Type I	SAE AMS 1424 (supersedes MIL-A-8243)	6850-01-435-6471 6850-01-435-6468 6850-01-435-6465 6850-01-449-9469	CO (1 GL) CN (5 GL) DR (55 GL) CO (275 GL Tote)	Fluid is generally used heated, either diluted with water or as supplied, for the removal of and time-limited protection against deposits of frost, ice, and snow on exterior aircraft surfaces prior to take-off. It is also used mixed with MIL-PRF-87937, Type IV, or MIL-PRF-85570, Type II solutions for low temperature cleaning per Paragraph 3.5.2.6.
27	Dishwashing Compound, Hand (Synthetic Detergent, Solid and Liquid Form),	P-D-410 Type II (Concentrated liquid, clear or opaque lotion, non-phosphate)	7930-00-764-5066 7930-00-880-4454 7930-00-899-9534	BT (1 QT) BT (6EA/ 1 GL) CN (5 GL)	Type II liquid mixed with fresh water will remove grease, oil, and dirt from a wide variety of surfaces.
28	Cleaning Compound, Solvent Mixtures	A-A-59281 (supersedes MIL-C-38737) Type I (Solvent blend that contains an aromatic solvent)	6850-00-611-7993 6850-00-538-0929 6850-01-016-3482	CN (1 PT) CN (1 GL) DR (55 GL)	This solvent blend is used to clean all types of soils (both polar and non-polar) from surfaces before applying sealants.
29	Disinfectant, General Purpose (Liquid Phenolic Type) and	A-A-1048			Treatment, disinfecting/sanitizing, and/or deodorizing of relief tube areas, latrine areas, urinals, toilet bowls, latrine buckets, garbage receptacles, sinks, galley area, and other aircraft interior areas requiring disinfection.
	Sanitizer, Phenolic Type, Concentrate	O-D-1435 Premixed Liquid (either material)	6840-00-530-7109	BX (4 EA/ 1GL CO)	Dilute with tap water as directed by the manufacturer on the container before use.
29 Cont.		Powder (O-D-1435 only)	6840-00-753-4797	BX (12 EA/ 8 OZ PG)	Mix one 8 OZ PG in 2 QT tap water for cleaning latrine buckets, urinals, and toilets, and one 8 OZ PG in 4 GL tap water for all other cleaning processes.
	Disinfectant Cleaner for Aircraft Interior (General Purpose Liquid)	SAE AMS 1453 (Eco Tru® 1453™; Zip Chemical Products Co; Cage Code # 1KQX9)	Commercial Item	CO (PT, QT, GL, &5 GL)	For general cleaning of all aircraft interior areas requiring disinfection. Comes ready-to-use with no mixing or dilution required. Follow the manufacture's instructions for use.
30	Detergent: External Removable Fuel Tanks	MIL-D-81956	6850-01-268-1754 6850-01-060-5921	CN (5 GL) DR (55 GL)	A water soluble, oil dispersing, non-ionic detergent used to remove traces of flammable solvents from aircraft external removable fuel tanks.

Table A-2. Consumable Materials - Continued

Item No	Nomenclature	Specification/Part Number	National Stock Number	Unit of Issue	Intended Use
31	Water Repellent: Window and Windshield, Glass and Plastic	SAE AS 6882 (supersedes MIL-W-6882)	6850-00-139-5297	BT (8 OZ)	Anti-wetting film for exterior glass or acrylic plastic windows and windshields to assure good visibility under rainy conditions.
32	Polish, Metal, Aluminum	A-A-59318 (supersedes MIL-P-6888)			Polishing unpainted aluminum surfaces of aircraft. The abrasive quality of the polish enables it to remove tarnish and produce a high lasting shine. The polish shall not be used on aluminum aircraft surfaces that are to be painted.
		Type I (Liquid)	7930-00-266-7131	CN (1 QT)	
			7930-00-267-1224	CN (1 GL)	
		Type II (Paste)	7930-00-734-4010	CN (1 QT)	
33	Polish, Plastic	P-P-560			Cleaning and polishing of plastic materials to remove light scratches, and in the application of an antistatic film which will prevent the electrostatic attraction of dust, lint, ash, etc., to acrylic plastic surfaces.
		Type I (Liquid)	7930-00-634-5340	BT (1 PT)	
			7930-00-935-3794	BX (24 EA 8oz)	
			7930-01-133-5375	BX (1 DZ)	
			7930-01-115-4744	CN (1 PT)	
34	Erasers, Rubber	A-A-132 (supersedes ZZ-E-661)			Removal of light tarnish or corrosion from electrical connectors and contacts and other avionics components.
		Rectangular with beveled ends (2 $^{5}/_{8}$ in L x ½ in W x $^{7}/_{8}$ in T	7510-00-949-5055	BX (1 DZ)	
		Rectangular (2 in L x ¾ in W x $^{7}/_{8}$ in T)	7510-00-323-8788	BX (1 DZ)	
			Cleaning Pads/Cloths		
35	Face Respirator Cleaning Wipe (towelettes)	3M Co. PN 504(Cage Code # OT1L6)			Hygienic cleaning of respirators and other personal protective gear/equipment (alcohol-free formula).
		11 x 8.5 in Wipes	4240-01-372-3078	BX (100 PK)	
			6510-01-397-4339	CS (5 BX of 100 PK)	
36	Cleaning Compound, Optical Lens (Ready to Use)	A-A-59199 (supersedes MIL-C-43454)			Cleaning of exposed optical surfaces.
		Type I (20% alcohol)	6850-00-392-9751	BT (2 OZ)	
			6850-00-227-1887	BT (1 QT)	
		Type II (57% alcohol)	6850-00-188-9875	BT (1 QT)	
37	Cleaner, Pipe	PN: 840507 (Cage Code # 64067)	9920-00-292-9946	BX (1344 EA)	Cleaning small orifices and crevices

Table A-2. Consumable Materials - Continued

Item No	Nomenclature	Specification/Part Number	National Stock Number	Unit of Issue	Intended Use
38	Pad, Cleaning and Polishing Non-metallic (for aircraft cleaning kit)	A-A-3100 (supersedes MIL-C-83957)			Non-woven, non-metallic, non-abrasive, polyester cleaning and polishing pads (12″ L x 6″ W) for use on aircraft, missile, and equipment surfaces. Replacement pads for aircraft wash kit (Appendix B, Item No. 1)
		Type I ($^3/_8$ in T)	7920-00-151-6120	PG (10 SH)	
		Type II (1 in T)	7920-00-171-1534	PG (10 SH)	
39	Aircraft Cleaning Pads	3M Co. PN 61-5001-8794-5	6850-01-496-4913	CS (200 EA)	Non-woven, non-metallic, non-abrasive, polyester cleaning and polishing pads with impregnated rubber particles for cleaning of aircraft, missile, and equipment surfaces. These pads provide improved cleaning efficiency over the Item # 38 pads.
	Scotchbrite® # 33	(3½ x 5 in pad			
	(Cage Code #(Improved Type) 76381)	3M # 961; PN 61-5000-4615-8 (3½ x 5 in pad holder - hand held)	Local Purchase	CS (10 EA)	
		3M Co. PN 61-5001-8795-2 (4 $^5/_8$ x 10 in pad	6850-01-496-4903	CS (100 EA)	
		3M #250; PN 61-5000-4913-7 (4 $^5/_8$ x 10 in pad holder -hand held)	Local Purchase	CS (5 EA)	
		3M Co. PN 61-5001-8796-0 (6 x 12 in pad)	6850-01-496-4901	CS (50 EA)	
		3M #261; PN 61-5000-3235-6 (6 x 12 in pad holder - handle	6850-01-499-5307	CS (1 EA)	
40	Chamois Leather, Sheepskin, Oil Tanned	KK-C-300			General purpose washing and polishing
		Grade B, Class 2, Size - small	8330-00-823-7545	PG (5 EA)	
41	Cheesecloth, Cotton, Bleached and Unbleached	CCC-C-440			Cleaning and polishing aircraft, missile, and equipment surfaces.
		Type I, Class 2 (bleached)	8305-00-262-3321	BO (36 in x 50 YD)	
			8305-00-205-3495	BO (36 in x 100 YD)	
		Type I, Class 1 (unbleached)	8305-00-222-2423	PG (38.5 in x 1 YD)	
		Type II, Class 2 (bleached)	8305-00-205-3496	PG (36 in x 10 YD)	
			8305-00-267-3015	PG (36 in x 1 YD)	

Table A-2. Consumable Materials - Continued

Item No	Nomenclature	Specification/Part Number	National Stock Number	Unit of Issue	Intended Use
42	Cloth, Cleaning, Non-woven Fabric	CCC-C-46			General cleaning (e.g. wiping up grease and liquid spills) where low residual surface contamination is required.
		Type I (Untreated)			
		Class 1 (Light duty)	8305-00-753-2967	RO (36 in x 50 YD)	
		Class 4 (Extra heavy duty)	7920-00-292-9204	BX (MX)-150 in^2 EA	
			7920-01-130-7738	PG (HD) -12 x 15 in EA	
		Class 6 (Light duty, perforated or non-perforated)	7920-00-401-8034	BX (HD) -150 in^2 EA	
		Class 7 (Aircraft solvent wiper)	7920-01-180-0556	18 BX (150 EA - 8¾ x 8¼ in)	
			7920-01-180-0557	BX (800 EA - 16¾ in x 20¾ in)	
43	Clothes, Cleaning for Aircraft Primary and Secondary Structural Surfaces	SAE AMS 3819; Class 2, Grade A (Dupont-Sontara® AC™ Aircraft Wipes; Distributor - Cage Code # 1BL94)			Used for cleaning surfaces requiring exceptionally low residual surface contamination.
		PN AC9165	6850-01-487-2859	8BX (100 EA - 9 x 16½ in)	
		PN AC12165	6850-01-487-2861	BX (250 EA - 12 x 16½ in)	
44	Cloth: Flannel, Cotton (Blue in color)	A-A-50129 (supersedes CCC-C-458)	8305-00-913-5817	BO (50 YD)	Cleaning and polishing of plastic surfaces such as canopies, windscreens, etc.

Table A-2. Consumable Materials - Continued

Item No	Nomenclature	Specification/Part Number	National Stock Number	Unit of Issue	Intended Use
45	Cloth: Cleaning, Low-Lint (White in color)	A-A-59323 (supersedes MIL-C-85043)			Hydraulic clean room and fluid systems cleaning.
		Type I (Clean room use -ultra-clean, low lint wipes)	7920-00-165-7195	BX (10 LB)	**WARNING** Do not use these cloths with flammable solvents as fire may result when used with these solvents.
		Type II (General use requiring low lint, highly absorbent wipes but not to clean room standards)	7920-00-044-9281	BX (10 LB)	
		Corrosion Preventive Compounds, Oils, Greases, and Lubricants			
46	Corrosion Preventive Compound, Solvent Cutback, Cold Application	MIL-PRF-16173 (supersedes MIL-C-16173)			
		Class II, Grade 1 - Hard Film (Low VOC ≤2.8 #/GL)	8030-01-396-5731	CN (1 PT)	Thick, wax-like, hard film consistency for long term protection of metal surfaces against corrosion with or without coverings (indoors or outdoors). This material will crack and spall off the surface at or below a temperature of 0° F (-18° C).
			8030-01-396-5732	CN (1 GL)	
			8030-01-347-0970	CN (5 GL)	
			8030-01-396-5237	DR (55 GL)	
		Class I, Grade 2 - Soft film (High VOC > 2.8 #/ GL)	8030-00-118-0666	CN (11 OZ) Aerosol	Thick, grease-like consistency for protecting metal surfaces against corrosion during rework or storage. Includes extended indoor protection of interior or exterior surfaces without the use of barrier materials. For outdoor protection, this material can only be used for a limited time where temperature is not extremely hot. It will adhere to surfaces and provide protection at temperatures down to -40° F (-40° C)
			8030-01-149-1731	CN (1 QT)	
			8030-00-244-1297	CN (1 GAL)	
			8030-00-244-1298	CN (5 GAL)	
			8030-00-244-1295	DR (55 GL)	

Table A-2. Consumable Materials - Continued

Item No	Nomenclature	Specification/Part Number	National Stock Number	Unit of Issue	Intended Use
46 Cont.		Class II, Grade 3 - Soft oily film (Low VOC ≤2.8 #/GL)	8030-01-396-5735	CN (1 PT)	Soft, oily material used to displace water, including salt water, from metal surfaces and joint areas and to protect them from corrosion for limited periods (30 days or less). Used to protect critical bare steel and phosphated steel surfaces of parts awaiting repair or being shipped to a depot for repair. Provides indefinite protection for parts within sealed barrier material containers.
			8030-01-396-5748	CN (1 GL)	
			8030-01-347-0971	CN (5 GL)	
			8030-01-396-5734	DR (55 GL)	
46 Cont.		Class II, Grade 4 (Transparent, non-tacky soft film)	8030-01-396-5738	CN (1 PT)	Thin, transparent, water displacing, tack-free protective film for protection of metal surfaces against corrosion during indoor storage or when located in interior areas of aircraft, missiles, or equipment and for limited outdoor preservation. Use on control cables, fasteners, bare metal areas, or anywhere temporary (30 days or less) protection is needed and for long term storage of parts within sealed barrier material container. It will adhere to surfaces and provide protection at temperatures down to -40° F (-40° C).
			8030-01-396-5743	CN (1 GL)	
			8030-01-347-0972	CN (5 GL)	
			8030-01-396-5736	DR (55 GL)	
47	Corrosion Preventive	MIL-DTL-85054 (supersedes MIL-C-85054)			Temporary repair of small paint damage areas from chips, scratches, or cracks. Intended for use on non- moving parts not requiring a lubricated surface, such as fasteners, seams, access panels, joints, unpainted metal, etc. Dries to a hard film.
47 Cont.	Compound (AML-GUARD)				
		Type I (Pressurized/aerosol can) Class 134A HCFC propellant	8030-01-066-3971	CN (12 OZ)	
			8030-01-041-1596	CN (16 OZ)	
			8030-01-347-0979	CN (14 OZ)	
		Type II (Bulk form)	8030-01-347-0983	BT (32 OZ - pump spray)	
			8030-01-347-0981	CN (1 QT)	
			8030-01-347-0982	CN (5 GL)	

Table A-2. Consumable Materials - Continued

Item No	Nomenclature	Specification/Part Number	National Stock Number	Unit of Issue	Intended Use
48	Corrosion Preventive Compounds, Water Displacing, Ultra-Thin Film	MIL-C-81309			Water displacing CPC which may be applied by dipping, spraying, brushing, or from pressurized containers.
		Type II (Soft film)			
		Class 1 (Non-pressurized container/bulk)	8030-00-213-3279	CN (1 GL)	Suitable for use on any metal surface except avionics/electronics applications for indoor and short term outdoor protection where surfaces can be re-coated when required.
			8030-00-262-7358	CN (5 GL)	**NOTE** It should not be used around LOX fittings.
48 Cont.			8030-00-524-9487	DR (55 GL)	
		Class 2, Grade CO2 (Pressurized container -CO2 propellant)	8030-00-938-1947	CN (16 OZ)	
		Type III (Soft film; Avionic grade)			Water displacing CPC for use on avionic equipment, electrical connector plugs, and contact points.
		Class 1 (Non-pressurized container - bulk)	8030-01-347-0978	CN (1 GAL)	
		Class 2 (Pressurized container/aerosol - non ODS propellant)	8030-00-546-8637	CN (16 OZ)	

Table A-2. Consumable Materials - Continued

Item No	Nomenclature	Specification/Part Number	National Stock Number	Unit of Issue	Intended Use
49	Lubricants, Corrosion Preventive Compound, Water Displacing, Synthetic	MIL-L-87177			Water displacing CPC which may be applied by dipping, brushing, or spraying (pump sprayer or aerosol spray). Suitable for use on any metal surface including avionics/electronics equipment, electrical connector/plugs, and contact points for indoor and short term outdoor protection where surfaces can be re-coated when required. It can be used as an alternate/substitute for MIL-C-81309, Types II and III.
		Type I (Pressurized can /Aerosol); Grade B (With added corrosion inhibitor)	6850-01-328-3617	CN (16 OZ)	
		Type II (Non-pressurized container / bulk); Grade B (With added corrosion inhibitor)	6850-01-326-7294	CN (5 L)	**CAUTION** Do not use around LOX fittings as fire may result.
50	Corrosion Preventive Compound (High Zinc Dust Content Paint)	Commercial Product			A high zinc dust content epoxy paint type corrosion preventive compound (also known as “cold galvanize”) used for repair of defects in galvanized coatings, to overcoat welded areas on galvanized steel, and to provide corrosion for areas where corrosion was removed on steel structures of support equipment, electronic vans, antenna towers, and vehicles.
		ZRC Prod. Co. (Cage Code # 07957) PN 8281-10002	8030-01-384-9932	CN (1 QT)	
		ZRC Prod. Co. (Cage Code # 07957) PN 8281-10000	8030-01-015-1550	CN (12 OZ) Aerosol	
		Devcon Corp. (Cage Code #16059)	8010-00-501-5798	CN (16 OZ) Aerosol	
50 Cont.		PN DEVCON Z &NHC Corp. (Cage Code # 20913) PN HY-ZINC			
		Devcon Corp. (Cage Code # 16059 PN’s 1703 & 12030	8010-00-360-3369	CN (1 GL)	

Table A-2. Consumable Materials - Continued

Item No	Nomenclature	Specification/Part Number	National Stock Number	Unit of Issue	Intended Use
51	Lubricating Oil, General Purpose, Preservative (Water Displacing, Low Temperature)	MIL-PRF-32033 (supersedes VV-L-800)	9150-00-836-8641	BT (½ OZ)	A general purpose, water displacing, low temperature rated (-40° F / -40° C) oil that can be applied by dipping, brushing, or spraying for lubricating and short term corrosion protection of metal parts; aircraft, missile, and equipment hinges; and small arms.
			9150-00-261-8146	BT (1 OZ)	
			9150-00-273-2389	CN (4 OZ)	
			9150-00-458-0075	CN (16 OZ) Aerosol	
			9150-01-374-2021	BT (16 OZ) Pump Spray	
			9150-00-231-6689	CN (1 QT)	
			9150-00-231-9045	CN (1 GL)	
			9150-00-231-9062	CN (5 GL)	
			9150-00-281-2060	DR (55 GL)	
52	Lubricant, Cleaner and Preservative for Weapons and Weapons Systems (CLP)	MIL-PRF-63460 (supersedes MIL-L-63460)	9150-01-102-1473	BT (½ OZ)	Lubrication and short term preservation of aircraft, missile, and equipment hinges, and small and large caliber weapons. Can be used as an alternate or substitute for MIL-PRF-32033 (VV-L-800).
			9150-01-079-6124	BT (4 OZ)	**CAUTION**
			9150-01-054-6453	BT (16 OZ) Pump Spray	Do not use MIL-L-63460 on rubber or other elastomeric materials as it may damage them. Use only in areas where the contained solvents can readily evaporate.
			9150-01-327-9631	BT (32 OZ) Pump Spray	
			9150-01-053-6688	BT (1 GL)	

Table A-2. Consumable Materials - Continued

Item No	Nomenclature	Specification/Part Number	National Stock Number	Unit of Issue	Intended Use
53	Corrosion Preventive Compound, Petroleum, Hot Application	MIL-C-11796			Preservation of interior surfaces of unsealed structural steel and aluminum alloy tubing assemblies and other metal areas that must remain bare and are exposed to either exterior or interior environments in service. Class 1 and 1A materials can be used to protect metal parts in unshielded outdoor storage or use for limited periods (90 days) and unlimited indoor use or storage either packaged or unpack-aged. Class 3 materials can be used to protect parts such as anti-friction bearings in indoor storage. Preferably, use only Class 1A materials on in service structures as they are non-slick and won't collect dirt as well as resisting higher ambient temperatures (+150° F / +66° C) without melting and running off surfaces to which it is applied.
		Class 1 (Hard film compound)	8030-00-231-2354	CN (5 LB)	
			8030-00-597-3288	CN (35 LB)	
			8030-00-231-2352	DR (400 LB)	
		Class 1A (Hard film, non-slick compound)	8030-00-823-8054	CN (35 LB)	
			8030-00-514-1843	DR (400 LB)	
		Class 3 (Soft film compound)	8030-00-598-5915	CN (1 PT)	
			8030-00-231-2353	CN (5 LB)	
			8030-00-285-1570	CN (35 LB)	
54	Linseed Oil, Boiled	ASTM D260, Type I (supersedes A-A-371)	8010-00-244-8961	CN (1 PT)	Preservation of interior surfaces of sealed structural carbon steel tubing assemblies.
			8010-00-152-3245	CN (1 GL)	
			8010-00-684-8789	CN (5 GL)	
			8010-00-242-6114	DR (55 GL)	
			LUBRICANTS		
55	Grease: Aircraft, General Purpose, Wide Temperature Range (-65° to +350°F/ -54° to +177°C) NATO Code G 395	MIL-PRF-81322 (supersedes MIL-L-81322)			Lubricating aircraft arresting gear sheave spacers and other equipment that operate under high contact loads and high sliding speeds.
		NGLI Grade 1	9150-01-378-0744	TU (8 OZ)	
			9150-01-378-0559	CN (1.75 LB)	
			9150-01-378-0693	CN (6.5 LB)	
		NGLI Grade 2	9150-00-181-7724	TU (8 OZ)	Lubricating aircraft wheel bearings and internal brake wheel assemblies, anti-friction bearings, gearboxes, and plain bearings.
			9150-01-262-3358	CA (14 OZ)	
			9150-00-944-8953	CN (1.75 LB)	

Table A-2. Consumable Materials - Continued

Item No	Nomenclature	Specification/Part Number	National Stock Number	Unit of Issue	Intended Use
56	Grease: Aircraft and Instrument, Gear and Actuator Screw (-100° to +250° F/-73° to +121° C) NATO Code G 354	MIL-PRF-23827 (supersedes MIL-G-23827			Lubricant for use in ball, roller and needle bearings, gears, and on sliding and rolling surfaces of such equipment as instruments, cameras, electronic gears, and aircraft control systems that are subject to extreme marine and low temperature conditions. It's extremely low volatility prevents it from fogging up optical instruments. It can be used for rolling and sliding surfaces of equipment having low motivating power (low torque equipment). Also intended for general use on aircraft, missile, and equipment gears, actuator screws, and other equipment requiring a lubricant with high load carrying capacity.
		Type I (Metallic soap thickened)	9150-00-985-7244	TU (4 OZ)	
			9150-00-985-7245	TU (8 OZ)	
			9150-00-935-4017	CA (14 OZ)	
			9150-00-985-7246	CN (1.75 LB)	
			9150-00-985-7247	CN (6.5 LB)	
			9150-00-985-7248	CN (35 LB)	
57	Grease: Plug Valve, Gasoline Oil, and Water Resistant	SAE AMS-G-6032 (supersedes MIL-G-6032)			Lubrication of tapered plug valves. The two types provide for the use in high pressure lubrication equipment or for servicing those valves which require a stick type lubricant. Also may be used as a gasket lubricant or seal and for general plug valve service in systems where gasoline, oil, alcohol, or water resistance is required.
	NATO Code G 363	Type I (Bulk form)	9150-00-190-0926	CN (8 OZ)	
			9150-00-257-5360	CN (1.75 LB)	
		Type II (Stick form)			
		Class A (¼ D x $^{7}/_{8}$ in L)	9150-00-261-8287	BX (24 EA)	
		Class B (13/32 D x 1-$^{3}/_{8}$ in L)	9150-00-261-8289	BX (24 EA)	
		Class C (35/64 D x 2 in L)	9150-00-261-8290	BX (24 EA)	
		Class D (21/32 D x 2-7/16 in L)	9150-00-261-8291	BX (24 EA)	
		Class G (55/64 D x 3-$^{3}/_{8}$ in L)	9150-00-261-8292	BX (24 EA)	

Table A-2. Consumable Materials - Continued

Item No	Nomenclature	Specification/Part Number	National Stock Number	Unit of Issue	Intended Use
58	Grease: Aircraft and Instrument, Fuel and Oxidizer Resistant	MIL-PRF-27617 (supersedes MIL-G-27617)			Lubrication of taper plug valves, gaskets, and bearings in fuel systems of aircraft and ground support equipment. Also suitable for use in LOX systems as a lubricant for valves, threads, and bearings in aerospace vehicles and support equipment. May not be suitable for aluminum and magnesium dynamic bearing lubrication because of possible ignition hazards. Type III is more commonly known as "Krytox" and is LOX compatible.
		Type I - NATO Code 397 (-65° to +400° F/-54° to +204° C)	9150-01-007-4384	TU (8 OZ)	
			9150-01-311-9771	CN (1.75 LB)	
			9150-01-088-0498	TU (2 OZ)	
		Type II - NATO Code G 398 (-40° to +400° F/-40° to +204° C)	9150-00-961-8995	TU (8 OZ)	
			9150-01-358-5154	CN (1 LB)	
		Type III - NATO Code G 399 (-30° to +400° F/-34° to +204° C)	9150-01-353-5788	CR (1 LB)	
		Type IV - NATO Code G 1350 (-100° to+400° F/-73° to +204° C)	9150-01-393-1749	TU (2 OZ)	
59	Grease: Molybdenum Disulfide, Low and High Temperatures; NATO Code G 353 (-100° to +250° F/-73° to +121° C)	MIL-G-21164	9150-00-935-4018	CA (14 OZ)	Lubricant for accessory splines, heavy loaded sliding steel surfaces, or for anti-friction bearings carrying high loads and operating through wide temperature ranges where molybdenum disulfide will prevent or delay seizure in the event of inadequate lubrication. Should not be used for wheel bearings or for other than steel surfaces without authorization.
			9150-00-754-2595	CN (1.75 LB)	
			9150-00-223-4004	CN (6.5 LB)	
			9150-00-965-2003	CN (35 LB)	
			9150-01-219-1629	DR (20 KG)	
60	Grease: Pneumatic System; NATO Code G 392	SAE AMS-G-4343 (supersedes MIL-G-4343)	9150-00-119-9291	TU (2 OZ)	Lubricant between rubber and metal parts of pneumatic systems. It may also be used for pressurized cabin bulk-head grommets and other mechanisms requiring rubber to metal lubrication.
			9150-00-269-8255	CN (1.75 LB)	

Table A-2. Consumable Materials - Continued

Item No	Nomenclature	Specification/Part Number	National Stock Number	Unit of Issue	Intended Use
61	Grease: Aircraft, Helicopter Oscillating Bearing; NATO Code G 366 (-65° to 160° F/-54° to +71° C)	MIL-G-25537	9150-00-478-0055	CA (14 OZ)	Lubrication of bearings having oscillatory motion of small amplitude.
			9150-00-616-9020	CN (1.75 LB)	
			9150-00-721-8570	CN (6.5 LB)	
			9150-00-721-8581	CN (35 LB)	
62	Grease, Aircraft, Ball and Roller Bearing; NATO Code G 372 (-100° to 450° F/-73° to +232° C)	MIL-G-25013	9150-00-823-8048	TU (8 OZ)	Ball and roller bearing lubrication. It may be used on aircraft actuators and gear boxes, and other similar equipment and anti-friction bearings where operation of low torque equipment requires lubrication for extended periods of time when authorized by the applicable system peculiar maintenance manual.
			9150-00-935-4019	CA (14 OZ)	
			9150-01-234-5866	CN (1 LB)	
			9150-00-141-6770	CN (1.75 LB)	
			9150-00-141-6771	CN (35 LB)	
63	Lubricant, Molybdenum Disulfide, Silicone; NATO Code S 1735	DOD-L-25681	9150-00-543-7220	LB (1 LB)	Lubricant for use on slow-speed sliding surfaces in aircraft gas turbine engines and other areas of aircraft, missiles and equipment subject to high temperatures (up to +752° F/+ 400° C) and as an anti-seize compound on threaded parts which operate at temperatures up to +1400° F (760° C).
64	Lubricant: Solid Film, Heat-Cured, Corrosion Inhibiting	SAE AS5272, Types I & II (replaces MIL-L-46010, Types I & II)			Lubricant for use to reduce wear and prevent galling, corrosion, and seizure of metals. Ideal for sliding motion applications such as plain and spherical bearings, flap tracks, hinges, thread, and cam surfaces. It is also useful where a solvent resistant coating is required, lubrication and corrosion protection for areas that experience slight vibratory motion, lubrication and corrosion protection of mechanisms having in frequent operation intervals or lifetime lubrication, and where long-term corrosion protection is needed under static conditions.

Table A-2. Consumable Materials - Continued

Item No	Nomenclature	Specification/Part Number	National Stock Number	Unit of Issue	Intended Use
64 Cont.		Type I (cure @ +300° F /+149° C)	9150-00-834-5608	CN (1 PT)	**NOTE** SAE AS5272, Type I and MIL-PRF-46010 cured at +300° F (+149° C) are usable on all metal surfaces, but SAE AS5272, Type II and MIL-PRF-46010 cured at +400° F (+204° C) should not be used on aluminum alloys or other metals adversely affected by exposure to this higher temperature. Before using MIL-PRF-46010 (a low VOC material) in lieu of SAE AS5272, Types I and II, authorization from the aircraft SPD or the missile or equipment SPM is required. Do not use these materials on roller bearings or in areas exposed to LOX.
			9150-00-985-7255	CN (1 GL)	
		Type II (cure @ +400° F /+205° C)	9150-00-948-6912	CN (1 QT)	
			9150-00-948-7025	CN (1 GL)	
		MIL-PRF-46010 (supersedes MIL-L-46010, Type III)			
		Color 1 (Natural)	9150-01-416-9506	CN (1 GL)	
		Color 2 (Black)	9150-01-416-9509	CN (1 GL)	
65	Lubricant, Solid Film, Air-Cured, Corrosion Inhibiting; NATO Code S 749	MIL-L-23398			Lubricant can be applied by dipping, brushing, or spraying for use on steel, titanium, or aluminum bearing surfaces where moderate wear life and corrosion protection is desired. It is suitable for sliding motion applications such as in plain spherical bearings, flap tracks, hinges and cam surfaces, especially where it is not feasible to use the type of solid film lubricant which requires baking at an elevated temperature. Used to repair defects in SAE AS5272 and MIL-PRF-46010 coatings.
		Type I (Bulk)	9150-00-954-7422	CN (1 QT)	
		Type II (Pressurized Spray)	9150-01-260-2534	CN (16 OZ) Aerosol	
		MIL-PRF-46147 Type I (18 hour cure)			
		Form 1 (Bulk)	9150-01-360-1907	CN (1 QT)	
		Color 1 (Natural)	9150-01-142-9361	CN (1 GL)	
		Color 2 (Black)	9150-01-360-1908	CN (1 QT)	
			9150-01-360-1909	CN (1 GL)	

Table A-2. Consumable Materials - Continued

Item No	Nomenclature	Specification/Part Number	National Stock Number	Unit of Issue	Intended Use
		Form 2 (Pressurized Spray) Color 1 (Natural)	9150-01-360-1903	CN (12 OZ) Aerosol	
			9150-01-360-1905	CN (16 OZ) Aerosol	
		Color 2 (Black)	9150-01-360-1904	CN (12 OZ) Aerosol	
			9150-01-360-1906	CN (16 OZ) Aerosol	
		Neutralizing Agents and Indicator Materials			
66	Fire Extinguishing Agent, Aqueous Film Forming Foam (AFFF) Liquid Concentrate, for Fresh and Sea Water	MIL-F-24385			Concentrate is intended for use in mechanical foam generating equipment such as fire fighting trucks or foam sprinkler systems for extinguishing fires. Dilute and use the AFFF agent with fresh water in the following proportion to achieve optimum performance: Type 3-3 parts of concentrate to 97 parts water by volume; and Type 6-6 parts concentrate to 94 parts water by volume.
		Type 3	4210-01-139-4972	CN (5 GAL)	
			4210-01-144-0291	DR (55 GAL)	
		Type 6	4210-01-056-8343	CN (5 GAL)	
			4210-01-056-0883	DR (55 GAL)	
67	Ammonium Hydroxide, Technical	A-A 59370 (supersedes O-A-451)			Used as a neutralizing agent for acids in urine.
		Type I (20 to 30% as ammonia)	6810-00-584-3793	BT (1 PT)	
			6810-00-817-9929	BT (1 GL)	
		Type III (9 to 10% as ammonia)	6810-00-527-2476	BT (1 QT)	
68	Sodium Bicarbonate, Technical (Baking Soda)	A-A-374 (ASTM D928)	6810-00-264-6618	BX (1 LB)	Used to neutralize sulfuric acid electrolyte deposits from lead-acid batteries.
			6810-00-297-0092	BG (50 LB)	
69	Sodium Phosphate, Monobasic, Anhydrous, Technical	ANSI/AWWA B504 (supersedes MIL-S-13727)	6810-00-281-1858	BG (100 LB)	Used to neutralize potassium hydroxide electrolyte deposits from nickel-cadmium batteries.
70	Boric Acid	A-A-59282 (supersedes O-C-265)	6810-00-264-6535	BT (500 GM)	Use to neutralize potassium hydroxide electrolyte deposits from nickel-cadmium batteries.
			6810-00-824-9090	BT (3 KG)	
			6810-00-973-5716	BT (1 LB)	
			6810-00-153-0191	BX (25 LB)	

Table A-2. Consumable Materials - Continued

Item No	Nomenclature	Specification/Part Number	National Stock Number	Unit of Issue	Intended Use
71	Phosphoric Acid, Technical (Orthophosphoric Acid)	A-A-55820 (supersedes O-O-670)			One of two components used to make bromothymol blue indicating solution to determine the location of contamination (electrolyte spills) from nickel-cadmium batteries and to indicate whether these areas have been completely neutralized.
		Class 1 (85% acid)	6810-00-264-6722	BT (7 LB)	
72	Bromothymol Blue Indicator Solution	MIL-B-11845	6810-01-031-4757	BT (1 PT)	One of two components used to make an indicator solution for detecting nickel-cadmium battery spills and to determine whether areas have been completely neutralized.
			6810-00-281-4270	BT (½ L)	
			6810-00-281-4271	BT (4 OZ)	
73	Litmus Paper	Commercial Item -CAGE Code # 22537			
		Blue Litmus Paper	6640-00-290-0146	HD (100 SH)	Color change to red indicates acid present (lead acid batteries).
		Red Litmus Paper	6640-00-290-0147	HD (100 SH)	Color change to blue indicates base/alkali present (nickel-cadmium batteries).
			Protective Materials		
74	Barrier Materials, Greaseproof, Waterproof, Flexible, Heat-Sealable	MIL-PRF-121(supersedes MIL-B-121)			General purpose masking material used for protecting equipment and supplies during transportation and storage under all climate conditions, and masking areas requiring protection during cleaning, corrosion removal, surface treatment, and painting operations.
		Type I (Heavy duty) Grade A, Class 1	8135-00-292-9719	RO (36 in x 100 YD)	
			8135-00-233-3871	RO (36 in x 200 YD)	
			8135-00-543-6574	RO (48 in x 100 YD)	
		Type II (Medium duty) Grade A, Class 1	8135-00-224-8885	RO (36 in x 200 YD)	
			8135-00-543-6573	RO (12 in x 200 YD)	
75	Barrier Material, Flexible, Greaseproof Water Resistant, Heat-Sealable	MIL-PRF-131 (supersedes MIL-B-131)			Used for preservation (e.g. sealing aircraft, missile, or equipment openings, protection of canopies, temporary walkway protection) during cleaning, corrosion removal, surface treatment, and painting operations. It is also used to protect parts in storage or being transported which require an absolute moisture vapor proof barrier.
		Class 1 (Non-woven plastic back)	8135-00-282-0565	RO (36 in x 200 YD)	

Table A-2. Consumable Materials - Continued

Item No	Nomenclature	Specification/Part Number	National Stock Number	Unit of Issue	Intended Use
					NOTE Always install with the plastic coated side toward the part and/or surface.
76	Kraft Paper, Untreated, (Brown in color)	A-A-203 (supersedes UU-P-268)			General wrapping applications and protection of surrounding surface areas during abrasive blasting, spray painting, sealant application, etc., where a water proof and/or moisture vapor proof masking material is not required.
		Style 1 (Sheets)			
		30 pound basis weight	8135-00-290-3408	SH (2 x 3 ft; 850 EA)	
		70 pound basis weight	8135-00-290-5504	SH (3 x 4 ft; 200 EA)	
		Style 2 (Rolls)			
		50 pound basis weight	8135-01-337-5370	RO (3 x 200 ft)	
76 Cont.			8135-00-160-7764	RO (3 x 980 ft)	
		60 pound basis weight	8135-00-160-7768	RO (3 x 820 ft)	
			8135-00-160-7769	RO (4 x 820 ft)	
		70 pound basis weight	8135-00-160-7771	RO (3 x 700 ft)	
			8135-00-160-7772	RO (4 x 700 ft)	
		80 pound basis weight	8135-00-160-7776	RO (3 x 615 ft)	
			8135-00-160-7778	RO (4 x 615 ft)	
77	Paint Masking Paper with Adhesive Back (Light brown in color)	Ready-MasktTM (3M Co. /CAGE Code # 52152 PN 850DC)	Open Purchase	RO (2 in x 180 ft)	Paper masking tape with adhesive along one edge. Protects surfaces from paint splatters and overspray. Easy to apply and comes off cleanly with no adhesive transfer.
			Open Purchase	RO (3 in x 400 ft)	
			Open Purchase	RO (3¼ in x 75 ft)	

Table A-2. Consumable Materials - Continued

Item No	Nomenclature	Specification/Part Number	National Stock Number	Unit of Issue	Intended Use
78	Plastic Sheet, Polyolefin (Clear)	A-A-3174 (supercedes L-P-378) Type I (Normal strength polyethylene), Class1 (non-food use), Grade A (low slip), Finish 1 (untreated)	8135-01-066-3217	RO (6 ft x 100 ft)	Protection of acrylic aircraft canopies during washing operations.
79	Tapes, Pressure Sensitive Adhesive, Preservation and Sealing (Black in color)	SAE AMS-T-22085 (supersedes MIL-T-22085)	7510-00-852-8179	RO (1 in x 36 YD)	Plastic preservation and sealing tape used for holding most barrier materials in place during storage or shipment and cleaning and corrosion removal operations. Effective for many outdoor applications and can be used on metals or painted surfaces with clean removal up to 2 years after initial use.
			7510-00-852-8180	RO (2 in x 36 YD)	
		Type II (use w/ or w/o an overcoating)	7510-00-885-3510	RO (2½ in x 36 YD)	
			7510-00-926-8939	RO (3 in x 36 YD)	
		(3M Co./CAGE Code # 52152 PN 481)	7510-00-916-9659	RO (4 in x 36 YD)	
			7510-00-926-8941	RO (6 in x 36 YD)	**NOTE** Do not use on acrylic or polycarbonate canopies and windscreens.

Table A-2. Consumable Materials - Continued

Item No	Nomenclature	Specification/Part Number	National Stock Number	Unit of Issue	Intended Use
80	Tapes, Pressure Sensitive Adhesive, Masking, Non-Staining, for Aircraft Painting Applications	SAE AMS-T-21595 (supersedes MIL-T-21595)			Conformable creped paper tape used for masking of either flat or contoured surfaces prior to painting and sealant applications. Tape can be used at baking temperatures up to +250° F (+121° C) for one hour and can be removed without adhesive transfer. Tape shall not be subjected to prolonged periods of outdoor exposure or sunlight because it will become very difficult to remove and will leave tape and adhesive residues.
		Type I (Creped paper backing) (3M Co./CAGE Code # 52152 PN 231/ Natural Color)	7510-01-371-3239	RO (½ in x 60 YD)	
			7510-01-371-3234	RO (¾ in x 60 YD)	
			7510-01-371-3238	RO (1 in x 60 YD)	
			7510-01-371-3236	RO (1½ in x 60 YD)	
			7510-01-371-3237	RO (2 in x 60 YD)	
			7510-01-371-3235	RO (3 in x 60 YD)	
		Type III (Plastic backing) (3M Co./CAGE Code # 52152 PN 218/ Light Green Color; Fine Line Tape®)	7510-01-158-0035	RO (¼ in x 60 YD)	Thin plastic tape used for fine line masking, in particular where color separation is involved, and during paint touch-up, and for other masking and holding applications. Tape shall not be subjected to prolonged periods of outdoor exposure or sunlight because it will become very difficult to remove, and will leave tape and adhesive residues
			7510-01-158-6606	RO (½ in x 60 YD)	
			7510-01-158-7778	RO (¾ in x 60 YD)	
			7510-01-158-6605	RO (1 in x 60 YD)	
			7510-01-158-6604	RO (1½ in x 60 YD)	
			7510-01-158-6603	RO (2 in x 60 YD)	
			7510-01-158-6607	RO (3 in x 60 YD)	

Table A-2. Consumable Materials - Continued

Item No	Nomenclature	Specification/Part Number	National Stock Number	Unit of Issue	Intended Use
81	Tapes, Pressure Sensitive Adhesive, for Masking During Paint Removal Operations	SAE AMS-T-23397 (supersedes MIL-T-23397)			Aluminum foil back masking tape used for protecting surrounding surfaces during paint removal operations and chemical and some mechanical corrosion removal operations. Aluminum backing provides excellent reflection of both heat and light. Tape can be used either indoors or outdoors for many long term applications. Use tape and decal applicator, Item # 84, to apply this tape to surfaces.
		Type II (Aluminum foil backing - 72 hour protection)	7510-00-806-4669	RO (½ in x 60 YD)	
			7510-00-654-9811	RO (¾ in x 60 YD)	
			7510-00-720-7516	RO (1 in x 60 YD)	
		(3M Co./CAGE Code # 52152 PN 425)	7510-00-684-8803	RO (2 in x 60 YD)	**NOTE** Use only 3m Co. PN 425 tape for aircraft chemical paint removal operations, as all other tapes will not hold up for these extended dwell time operations.
			7510-00-816-8077	RO (3 in x 60 YD)	
			7510-00-982-3955	RO (4 in x 60 YD)	
			7510-01-179-0662	RO (6 in x 60 YD)	
82	Tapes, Pressure Sensitive Adhesive, Masking	A-A-883 (supersedes PPP-T-42)			
		Type II (Flat paper backing)	7510-01-026-4661	RO (½ in x 60 YD)	This solvent resistant tape is ideal for straight line paint masking operations. The 1in width of the 3M Co. PN 250 tape is the required tape for performing the paint wet tape adhesion test. Because of its high strength, it is good for holding, bundling, and wrapping on a variety of surfaces. It is not recommended for outdoor exposure because it becomes very difficult to remove.
			7510-00-290-2024	RO (¾ in x 60 YD)	
		(3M Co./CAGE Code # 52152 PN 250 -Tan Color)	7510-00-283-0612	RO (1 in x 60 YD)	
			7510-00-290-2027	RO (1½ in x 60 YD)	
			7510-00-290-2026	RO (2 in x 60 YD)	
			7510-00-266-6694	RO (3 in x 60 YD)	

Table A-2. Consumable Materials - Continued

Item No	Nomenclature	Specification/Part Number	National Stock Number	Unit of Issue	Intended Use
83	Abrasive Blasting Tape, Impact Resistant (Light Green in color)	Commercial Product 3M Co./ CAGE Code # 52152 PN 500	7510-01-300-2124	RO (1 in x 10 YD)	Used for masking to protect aircraft, missile, and equipment surfaces during abrasive blasting corrosion removal operations.
			7510-01-300-2125	RO (2 in x 10 YD)	
			7510-01-300-2126	RO (3 in x 10 YD)	
			7510-01-300-2127	RO (4 in x 10 YD)	
84	Applicator, Tape and Decal (made of hard plastic)	Commercial Product 3M Co./CAGE Code # 76381 PN P.A.-1 (Hard plastic tool with tapered edges; 4 in L x 2¾ in W)	5120-00-628-5569	BX (25 EA)	Ideal for applying masking tapes (especially the Item # 81 aluminum foil tape), anti-erosion leading edge tape, decals, etc.
	Tape, Pressure Sensitive, for Wet Tape Paint Adhesion Testing	3M Co./CAGE Code # 78381 PN 250	7510-00-266-6694	RO (1 in W x 60YD L)	Used to perform wet tape adhesion testing on newly applied and old paint systems to determine proper paint adhesion.
		Sealants and Sealing Accessories			
		KT - Two-Part Can Kit (Base and Accelerator) PMF - Premixed and Frozen SC - Semkit Cartridge			
85	Sealing and Coating Compound, Corrosion Inhibitive	MIL-PRF-81733 (supersedes MIL-S-81733) Class 1 (Polysulfide); Grade A (Chromate Inibitors) Type I (Brushable)			Used for sealing faying surfaces and wet installation of fasteners on permanent structures. It is also the preferred sealant for form in-place (FIP) seals on doors, removable panels, and sealing gaps and seams.
85 Cont.		I-½	8030-00-008-7207	KT (1 PT)	**NOTE** Do not use on inside of integral fuel tanks.
			8030-00-009-5022	KT (1 QT)	

Table A-2. Consumable Materials - Continued

Item No	Nomenclature	Specification/Part Number	National Stock Number	Unit of Issue	Intended Use
		I-2	8030-00-008-7196	KT (1 PT)	
			8030-00-762-8807	KT (1 QT)	
			8030-01-363-6501	PMF (6 OZ CA)	
			8030-01-361-1814	SC (3½ OZ)	
		Type II (Gun or spatula application)			
		II-½	8030-00-008-7198	KT (1 PT)	
			8030-00-470-9154	KT (1 QT)	
			8030-01-097-4519	KT (1 GL)	
			8030-01-184-0328	SC (2½ OZ)	
			8030-01-184-0329	SC (6 OZ)	
		II-2	8030-01-124-7622	KT (½ PT)	
			8030-00-009-5023	KT (1 PT)	
85 Cont.			8030-00-008-7200	KT (1 QT)	
			8030-01-518-3439	KT (1 GL)	
			8030-01-333-3954	PMF (2½ OZ CA)	
			8030-01-333-4821	PMF (6 OZ CA)	
			8030-01-196-1958	SC (2½ OZ)	
			8030-01-184-0330	SC (6 OZ)	
		II-4	8030-00-008-7201	KT (1 PT)	
			8030-00-008-7202	KT (1 QT)	
		Type III (Spray gun application)			
		III-1	8030-00-008-7203	KT (1 PT)	
			8030-00-008-7204	KT (1 QT)	
			8030-00-871-8489	KT (1 GL)	
		Type IV (Faying surface applications; gun or spatula; extended cure time)			

Table A-2. Consumable Materials - Continued

Item No	Nomenclature	Specification/Part Number	National Stock Number	Unit of Issue	Intended Use
85 Cont.		IV-12	8030-01-395-2726	KT (1 PT)	
			8030-00-008-7205	KT (1 QT)	
			8030-00-151-9973	KT (1 GL)	
		IV-24	8030-01-395-2728	KT (1 PT)	
			8030-00-008-7206	KT (1 QT)	
			8030-01-363-6504	PMF (6 OZ CA)	
		IV-48	8030-01-192-2807	KT (½ PT)	
			8030-01-395-2729	KT (1 PT)	
			8030-00-028-8495	KT (1 QT)	
86	Sealing Compound, Temperature Resistant, Integral Fuel Tanks and Fuel Cell Cavities,	SAE AMS-S-8802 (supersedes MIL-S-8802) Type II (Manganese dioxide cured)			Used for fillet and brush sealing in integral fuel tanks and fuel cell cavities. This sealant is manganese dioxide cured and doesn't contain any chromates or other corrosion inhibitors.
	High Adhesion (Polysulfide)	Class A (Brushable)			
86 Cont.		A-½	8030-00-753-4596	KT (½ PT)	
			8030-00-965-2004	KT (1 PT)	
			8030-00-842-8127	KT (1 GL)	
			8030-00-753-5008	SC (2½ OZ)	
			8030-00-753-5010	SC (6 OZ)	
		A-1	8030-01-386-3656	KT (1 QT)	
		A-2	8030-00-753-4598	KT (½ PT)	
			8030-00-753-5343	KT (1 PT)	
			8030-00-723-5344	KT (1 QT)	
			8030-00-841-6832	KT (1 GL)	
			8030-01-363-6671	PMF (2½ OZ CA)	
			8030-01-363-6505	PMF (6 OZ CA)	
			8030-00-753-5003	SC (2½ OZ)	
			8030-00-753-5009	SC (6 OZ)	

Table A-2. Consumable Materials - Continued

Item No	Nomenclature	Specification/Part Number	National Stock Number	Unit of Issue	Intended Use
		Class B (Gun and spatula application)			
86 Cont.		B-½	8030-00-753-4597	KT (½ PT)	
			8030-00-174-2599	KT (1 PT)	
			8030-00-080-1549	KT (1 QT)	
			8030-00-841-6831	KT (1 GL)	
			8030-00-753-5007	SC (2½ OZ)	
			8030-00-753-5004	SC (6 OZ)	
		B-1	8030-01-337-9408	SC (2½ OZ)	
			8030-01-376-8504	KT (1 GL)	
		B-2	8030-00-753-4599	KT (½ PT)	
			8030-00-723-2746	KT (1 PT)	
			8030-00-685-0915	KT (1 QT)	
			8030-00-579-8453	KT (1 GL)	
			8030-01-333-4823	PMF (24 EA, 2½ OZ CA)	
			8030-01-333-4822	PMF (24 EA, 6 OZ CA)	
			8030-00-753-5006	SC (2½ OZ)	
			8030-00-753-5005	SC (6 OZ)	
86 Cont.		B-4	8030-00-174-2598	KT (1 PT)	
			8030-00-850-5717	KT (1 QT)	
			8030-00-850-0759	SC (2.5 OZ)	
			8030-00-850-0758	SC (6 OZ)	
		Class C (Extended assembly time)			
		C-20	8030-01-048-3772	KT (1 PT)	
			8030-00-427-2661	KT (1 GL)	
			8030-00-152-0012	SC (6 OZ)	
		C-80	8030-00-709-3278	KT (1 QT)	
			8030-00-432-1544	KT (1 GL)	

Table A-2. Consumable Materials - Continued

Item No	Nomenclature	Specification/Part Number	National Stock Number	Unit of Issue	Intended Use
87	Sealing Compound, Integral Fuel Tanks, and General Purpose, Intermittent Use To 360° F (182° C) (Polysulfide)	SAE AMS 3276 (supersedes MIL-S-83430)			Use for fillet sealing of joints and seams and brush sealing or overcoating of fasteners in integral fuel tanks and fuel cell cavities, in particular where temperatures of 360° F (182° C) are experienced on an intermittent basis. This sealant is manganese dioxide cured and doesn't contain any chromates or other corrosion inhibitors.
		Class A (Brushable)			
		A-½	8030-00-602-0107	KT (½ PT)	
			8030-01-395-5474	KT (1 PT)	
			8030-01-036-6936	KT (1 QT)	
			8030-00-312-6128	SC (6 OZ)	
		A-2	8030-00-602-0049	KT (½ PT)	
			8030-00-602-0051	KT (1 GL)	
			8030-01-387-1001	PMF (6 OZ)	
		Class B (Gun or spatula application)			
		B-¼	8030-01-214-0374	SC (6 OZ)	
87 Cont.		B-½	8030-00-602-0039	KT (½ PT)	
			8030-00-348-7888	KT (1 PT)	
			8030-01-252-7963	SC (2½ OZ)	
			8030-00-602-0045	SC (6 OZ)	
		B-2	8030-00-485-3237	KT (1 PT)	
			8030-01-066-6444	KT (1 QT)	
			8030-00-585-4900	KT (1 GL)	
			8030-01-383-4185	PMF (2½ OZ)	
			8030-01-383-3953	PMF (6 OZ CA)	
			8030-00-560-8758	SC (6 OZ)	
		B-4	8030-01-195-0655	KT (1 QT)	
		B-6	8030-00-602-0035	SC (6 OZ)	
			8030-01-387-1061	PMF (6 OZ CA)	
		C-½	8030-01-311-5653	KT (1 QT)	

Table A-2. Consumable Materials - Continued

Item No	Nomenclature	Specification/Part Number	National Stock Number	Unit of Issue	Intended Use
88	Sealing Compound, Low Adhesion, Corrosion Inhibiting (Non-Chromate), Polysulfide	PN: PR-1773; CAGE Code # 83574 (supersedes PR-1403G)			This material is a two-part, non-chromate type corrosion inhibiting, low adhesion, fuel resistant sealant used for fay surface sealing of access doors, removable panels and structures, and the heads of their attaching fasteners. It can also be used to make FIP gaskets and repair damaged areas of FIP gaskets. It should not be used for sealing inside integral fuel tanks, in high temperature areas, or on permanently installed structures.
		Class B (Gun or spatula application)			
		B-½	8030-01-418-5414	SC (2½ OZ)	
			8030-01-418-5418	SC (6 OZ)	
		B-2	8030-01-104-5396	KT (1 QT)	
			8030-01-418-5415	SC (2½ OZ)	
			8030-01-418-5417	SC (6 OZ)	
89	Sealing Compound, Low Adhesion, Corrosion Inhibiting, for Removable Panels and Fuel Tank Inspection Plates	SAE AMS 3267 (supersedes MIL-S-8784)			This material is a two-part, low adhesion, fuel resistant sealant that doesn't contain any corrosion inhibitors. It can be used for fay surface sealing of removable structures such as access doors, floor panels and plates, fuel tank inspection plates, and other removable panels. It should not be used for sealing inside integral fuel tanks, in high temperature areas, or on permanently installed structures.
		Class A (Brushable)			
		A-½	8030-00-291-8380	KT (½ PT)	
		A-2	8030-00-584-4399	KT (½ PT)	
			8030-01-127-8281	KT (1 PT)	
			8030-00-152-0062	SC (2½ OZ)	
		Class B (Gun or spatula application)			
		B-½	8030-00-598-2910	KT (½ PT)	
			8030-00-881-3933	KT (1 PT)	
			8030-01-028-4336	KT (1 QT)	
			8030-01-065-0306	KT (1 GL)	
			8030-00-152-0022	SC (2.5 OZ)	
			8030-01-365-3912	SC (6 OZ)	
89 Cont.			8030-00-152-0021	SC (8 OZ)	
		B-2	8030-00-616-9191	KT (½ PT)	
			8030-00-680-2041	KT (1 PT)	
			8030-01-371-9247	PMF (24 EA; 2½ OZ CA)	

Table A-2. Consumable Materials - Continued

Item No	Nomenclature	Specification/Part Number	National Stock Number	Unit of Issue	Intended Use
			8030-01-371-9246	PMF (24 EA; 6 OZ CA)	
			8030-01-383-4993	SC (6 OZ)	
90	Sealing Compound, Aircraft, Firewall	SAE AMS 3374 (supersedes MIL-S-38249)			Sealing aircraft firewall structures exposed to very high temperatures to prevent the passage of air and vapors. It will withstand 400° F (204° C) continuously and 2000° F (1093° C) for at least 15 minutes.
		Type 1 (One component; silicone)	8040-01-168-0077	CA (12 OZ)	
		Type 4 (two component; SAE AMS 3374/4 and/or MIL-S-38249, Type I)	8030-00-783-8898	KT (½ PT)	
			8030-00-723-5345	KT (1 PT)	
			8030-01-033-3485	KT (1 GL)	
			8030-01-364-7362	PMF (24 EA; 2½ OZ CA)	
			8030-01-365-0049	PMF (24 EA; 6 OZ CA)	
			8030-01-364-7359	SC (2½ OZ)	
90 Cont.			8030-00-783-8886	SC (6 OZ)	
91	Sealing Compound, Polythioether, for Aircraft Structures, Fuel and High Temperature Resistant, Fast Curing at Ambient and Low Temperatures	SAE AMS-S-29574; MIL-S-29574; and/or SAE AMS 3277, Grade A			Used for fay surface sealing and repairing fillet and fastener seals in integral fuel tanks. It can also be used for overcoating fasteners and sealing seams and joints. **NOTE** • Type I compounds require the use of an adhesion promoter (e.g. PR-186) whereas Type II compounds do not. • Not for use on aircraft windshields and canopies.
		Type I (Fuel resistant - use at -80° to +300° F/ -62° to +149° C continuous and intermittent to +400° F/ +204° C			
		Class A (Brushable)			
		A-½	8030-01-330-6568	SC (2½ OZ)	
			8030-01-330-0730	SC (6 OZ)	
		A-1	8030-01-330-0735	SC (2½ OZ)	
		Class B (Gun or spatula application)			

Table A-2. Consumable Materials - Continued

Item No	Nomenclature	Specification/Part Number	National Stock Number	Unit of Issue	Intended Use
91 Cont.		B-¼	8030-01-290-5134	SC (2½ OZ)	
			8030-01-290-5135	SC (6 OZ)	
		B-½	8030-01-290-5136	SC (2½ OZ)	
			8030-01-290-5137	SC (6 OZ)	
		B-2	8030-01-290-5138	SC (2½ OZ)	
			8030-01-290-5139	SC (6 OZ)	
		Type II (Fuel resistant. Corrosion inhibiting; use at -80° to +300° F (-62° to +149° C) continuous and intermittent to +360° F(+182° C)			
		Class B (Gun or Spatula application)			
		B-¼	8030-01-364-3883	SC (2½ OZ)	
			8030-01-364-3886	SC (6 OZ)	
		B-½	8030-01-364-3882	SC (2½ OZ)	
			8030-01-364-3885	SC (6 OZ)	
91 Cont.		B-2	8030-01-364-3881	SC (2½ OZ)	
			8030-01-364-3884	SC (6 OZ)	
92	Adhesives-Sealants, Silicone, RTV, Non-Corrosive (for Use With Sensitive Metals and Equipment)	MIL-A-46146 Group I (General purpose) Type I (Thixotropic/paste type)			These are room temperature vulcanizing (RTV) silicone sealants used on sensitive metals and equipment, in particular on electronics equipment and antennas, at temperatures up to +400° F (204° C). They cure at room temperature upon contact with moisture in the air. To improve adhesion, use these sealants after applying a primer (Item # 93) specified by the manufacturer to the surfaces. Kit (KT) includes the required primer, but tube (TU) and cartridge (CA) do not.
		White	8040-01-331-7133	TU (3 OZ)	**NOTE** These sealants are not fuel resistant, and they shall not be used in fuel wet areas

Table A-2. Consumable Materials - Continued

Item No	Nomenclature	Specification/Part Number	National Stock Number	Unit of Issue	Intended Use
		White	8040-01-331-8046	CA (12 OZ)	
92 Cont.		White	8040-00-118-2695	KT (3 OZ; TU w/½ OZ BT primer)	
		White	8040-01-938-1535	KT (12 OZ CA w/10 OZ BT primer)	
		Gray	8040-01-057-0091	CN (1 PT)	
		Gray	8040-01-394-2026	KT (5 GL CO w/½ GL BT primer)	
		Clear	8040-01-148-1759	CN (1 PT)	
		Clear	8040-01-380-6428	TU (3 OZ)	
		Clear	8040-01-227-3787	CA (12 OZ)	
		Clear	8040-01-394-2024	KT (5 GL CO w/½ GL BT primer)	
		Type II (Self-leveling liquid type)			
		Clear	8040-01-331-7127	TU (3 OZ)	
		Clear	8040-01-331-7134	CN (1 PT)	
		Clear	8040-00-927-1513	KT (1 PT CN w/10 OZ BT primer)	
		Clear	8040-01-009-1562	KT (3 OZ TU w/½ OZ BT primer)	
		Group II (High strength)			
92 Cont.		Type III; Type I for old specification; (Thixotropic/ paste type)			
		Clear	8040-00-117-8510	TU (3 OZ)	
		Clear	8040-01-394-3735	TU (3 OZ)	
		Clear	8040-01-450-4013	TU (3 OZ)	
		Clear	8040-01-375-4803	CA (6 OZ)	

Table A-2. Consumable Materials - Continued

Item No	Nomenclature	Specification/Part Number	National Stock Number	Unit of Issue	Intended Use
		Clear	8040-01-082-9128	CA (12 OZ)	
		Gray	8040-00-145-0020	TU (3 OZ)	
		Gray	8040-01-375-4805	TU (3 OZ)	
		Gray	8040-01-331-7128	CA (12 OZ)	
		Gray	8040-01-275-5052	KT (12 OZ CA w/1 OZ BT primer)	
		Translucent	8040-01-450-5419	CA (6 OZ)	
		Translucent	8040-01-450-9184	KT (5 GL CO w/½ GL BT primer)	
		Type II (Self-leveling liquid type)			
		Clear	8040-01-441-0671	KT (3 OZ TU w/½ OZ BT primer)	
92 Cont.		Group III (High temperature)			
		Type I (Thixotropic/paste type)			
		Gray	8040-01-450-6545	TU (3 OZ)	
93	Primer for RTV Silicone Adhesive-Sealants (for use with Item # 92)	GE Co. (CAGE Code # 01139)			Used for improving adhesion of RTV silicone adhesive-sealants (Item # 92).
		PN SS 4004 Straw	8040-00-893-4815	CN (1 PT)	
		PN SS 4004 Pink	8040-00-083-8403	CN (1 PT)	
		Dow Corning Co. (CAGE Code # 71984)			
		PN DC 1200 Red	8040-00-111-2682	CN (1 PT)	
		PN DC 1200 Clear	8040-00-845-4304	CN (1 PT)	
		PN DC 1200 Red	8040-00-870-0877	CN (1 QT)	
		PN DC 1200 Pink	8040-00-914-6970	CN (1 GL)	
		PN DC 1204 Clear	8040-01-042-1422	CN (1 PT)	
		PN DC 1204 Clear	8040-01-063-7509	CN (1 GL)	

Table A-2. Consumable Materials - Continued

Item No	Nomenclature	Specification/Part Number	National Stock Number	Unit of Issue	Intended Use
94	Sealing Tape, Polytetrafluoro ethylene, Expanded (EPTFE),	SAE AMS 3255 Class 1 (Ribbed)			Sealing of faying surfaces, pressurized and non-pressurized access panels, floorboards, and windscreens when approved by the aircraft SPD or the missile or equipment SPM. Do not use in integral fuel tanks, fuel soaked or high temperature applications (+ 250° F / +121° C or higher). Environmentally preferred non-hazardous alternative to two-component, solvent-based sealants. The Class 1/Ribbed tapes are preferred for most sealing operations where these tapes are approved for use.
	Oil and Water Resistant (Skyflex Tape - W. L. Gore Associates Inc. - CAGE Code # 0AMD8 & 17217)	PN GUA-1001-1	8030-01-367-7357	RO (1 $^{5}/_{8}$ in x 100 ft)	
		PN GUA-1001-2	8030-01-475-1368	RO (1 ½ in x 100 ft)	
		PN GUA-1017-1	8030-01-368-7208	RO (1 in x 100 ft)	
		PN GUA-1401-1 (3 ribs)	8030-01-454-7419	RO (1.1 in x 100 ft)	
94 Cont.		PN GSC-21-80767-00 (5 ribs)	8030-01-454-7418	RO (1.1 in x 100 ft)	
		Class 2 (Non-ribbed)			
		PN GUA-1003-1	8030-01-368-7207	RO (¼ in x 100 ft)	Compensation tape: fills gaps and repairs minor seal defects
		PN GUA-1058-1	8030-01-381-1584	RO (½ in x 100 ft)	Thin: use as shim to prevent chafing.
		PN GUA-1057-1	8030-01-377-3084	RO (1 in x 100 ft)	Thin: use as shim to prevent chafing.
		PN GUA-1038-1	8030-01-463-6459	RO (1.42 in x 100 ft)	Thin: use as shim to prevent chafing.
		PN GUA-1059-1	Open Purchase	RO (1½ in x 100 ft)	Thin: use as shim to prevent chafing.
		PN GUA-1301-1	Open Purchase	RO (1 in x 100 ft)	Thick: use for faying surfaces with wide gaps.

Table A-2. Consumable Materials - Continued

Item No	Nomenclature	Specification/Part Number	National Stock Number	Unit of Issue	Intended Use
95	Av-Dec® Polyurethane Tapes & Sealants (CAGE Code # 1NPE1)				
95 Cont.	HiTak™Polyurethane Tape with adhesive on both sides	PN HT3935-7-100	8030-01-494-5206	RO (1 in x 12 ft)	Fay surface sealing areas where fluid intrusion is a problem but ease of component removal is required; such as aircraft floor panels and tie down fittings. For maximum sealing, remove the release film so both sides of the tape adhere to the surfaces. For easier panel removal, leave the release film in place on the side of the tape in contact with the removable panel. Damaged areas are easily repaired as the tape adheres well to itself.
		PN HT3935-7-150	8030-01-494-5209	RO (1½ in x 12 ft)	
		PN HT3935-7-200	8030-01-494-5207	RO (2 in x 12 ft)	
		PN HT3935-7-250	8030-01-494-4136	RO (2½ in x 12 ft)	
95 Cont.	TufSeal FR™ Polyurethane Tape with Permanent Teflon® Backing On One Side	PN HT3000-100	Open Purchase	RO (1 x 12 ft)	Fay surface sealing of non-permanent structures; such as access and inspection panels/covers on aircraft, missiles, and equipment to prevent fluid entry into the faying surface areas and the cavities covered by the installed panels/covers. The Teflon® backing is highly abrasion resistant and permits slight movement (vibration, etc.) of the panels/covers without damaging the structure to which they are attached. This tape is very durable, so it can be reused in place many times after initial installation. Damaged sections are easily repaired by cutting them out and splicing in a new section that slightly overlaps onto the cut edges of the old tape seal.
		PN HT3000-150	Open Purchase	RO (1½ in x 12 ft)	
		PN HT3000-200	Open Purchase	RO (2 in x 12 ft)	
		PN DR4000FR-100	8030-01-498-9079	RO (1 x 12 ft)	
		PN DR4000FR-150	8030-01-498-8779	RO (1½ in x 12 ft)	
		PN DR4000FR-200	8030-01-498-9078	RO (2 in x 12 ft)	
		PN DR4000FR-250	8030-01-498-9076	RO (2½ in x 12 ft)	
95 Cont.	SelfLeveling™ Green Polyurethane Sealant	PN HT3326-5-50	8030-01-494-9650	CA (50 CC)	This sealant is intended for filling voids/cavities on horizontal surfaces, such as aircraft seat track depressions, to prevent fluid from accumulating in them and causing corrosion while still being easy to remove for required inspections and/or operational use. It is also useful for filling cavities around antenna connectors.

Table A-2. Consumable Materials - Continued

Item No	Nomenclature	Specification/Part Number	National Stock Number	Unit of Issue	Intended Use
	Thixoflex™ Orange Polyurethane Sealant	PN TF2219-50	8030-01-494-7677	CA (50 CC)	This sealant is intended for filling the same types of voids/cavities as the SelfLeveling™ Green sealant, but it can also be used on vertical and overhead surfaces as it is a very thick material that will remain in place without running while it cures. It is also easily removed for required inspections and/or operational use.
	Sealant Dispenser	PN UG981108-01 (50 CC capacity)	5120-01-494-7678	EA	
96	Adhesion Promoter for Polysulfide Sealing Compounds				
96 Cont.	Solvent Based (Blue solution)	SAE AMS 3100/1 (PN PR-148; CAGE Code # 83574)	8030-00-560-8756	CN (1 PT)	Solvent based solution for enhancing the adhesion of polysulfide compounds to a wide variety of substrates (e.g. integral fuel tanks). Apply by brush or clean cloth. Material dries at room temp in approximately 30 minutes leaving a titanate film on the surface that enhances sealant adhesion.
	Water Based (Pink solution)	SAE AMS 3100/3 (PN PR-182; CAGE Code #83574)	8030-01-131-3228	CN (1 PT)	VOC compliant solution for enhancing adhesion of poly-sulfide sealants to wide variety substrates (e. g. integral fuel tanks). Apply by brush or clean cloth. It dries at room temp in 30 minutes leaving an adhesion enhancing film.
97	Adhesion Promoter for Poly thioether Sealing Compounds Solvent Based Silane Solution (Yellow solution)	PN PR-186 - CAGE Code # 83574	8030-01-363-6682 8030-01-363-6679 8030-01-363-6678	BT (1 OZ) BT (2 OZ) BT (16 OZ)	Solvent based silane solution for enhancing the adhesion of polythioether sealants to cured polysulfide or polythioether sealants and a variety of coated metal surfaces (e.g. integral fuel tanks). Apply by brush or clean cloth. Material dries at room temp in approximately 30 minutes leaving a silane film that enhances sealant adhesion.

Table A-2. Consumable Materials - Continued

Item No	Nomenclature	Specification/Part Number	National Stock Number	Unit of Issue	Intended Use
98	Plastic Adhesive for SAE AMS 3255 EPTFE (Skyflex®) Sealing Tape with no adhesive				Use to hold EPTFE sealing tape with no adhesive backing in place. Fast drying and resists weathering, water, oil, plasticizer migration and aliphatic fuels.
	Backing (Red-brown in color)	Scotch-Grip 847 (Liquid) CAGE Code #1A9T3	8040-01-033-7507	TU (5 OZ)	
	(Amber in color)	MMM-A-189			
		Scotch-Grip 1099 (Brush or Spray) (CAGE Code #1A9T3)	8040-01-126-1422	CN (1 QT)	
		Scotch-Grip 1099-L (Brush) (CAGE Code #1A9T3)	8040-00-043-1717	TU (2 OZ)	
			Solvents		
99	Dry Cleaning and Degreasing Solvents	A-A-59601			
		Type II (High Flash Point +140° F/+61° C)	6850-00-110-4498	CN (1 PT)	General purpose cleaning solvent for removing oil, grease, painting preservation compounds, etc., from painted or unpainted metal surfaces. Do not use as a final cleaner prior to.
			6850-00-637-6135	GL (1 GL)	
			6850-00-274-5421	CN (5 GL)	
			6850-00-285-8011	DR (55 GL)	
		Type III	6850-01-377-1916	CN (4 OZ)	Ideal for use in localities where Type II of this material is restricted or prohibited due to its higher VOC content, vapor pressure, and/or lower flash point.
		(Very High Flash Point +200° F/+93° C)	6850-01-377-1811	CN (1 PT)	**NOTE**
			6850-01-377-1808	CN (1 QT)	
			6850-01-377-1809	CN (1 GL)	This solvent must be wiped off the surface completely as it has a very slow evaporation rate.
			6850-01-331-3349	CN (5 GL)	
			6850-01-331-3350	DR (55 GL)	
		MIL-PRF-680			

Table A-2. Consumable Materials - Continued

Item No	Nomenclature	Specification/Part Number	National Stock Number	Unit of Issue	Intended Use
99 Cont.		Type II			General purpose cleaning solvent for removing oil, grease, etc., from metal surfaces. Do not use as a final cleaner prior to painting or applying preservation compounds, etc. on painted or unpainted surfaces. Same as A-A 59601, Type II.
		(High Flash Point +140° F/+61° C)	6850-01-474-2319	CN (1 GL)	
			6850-01-474-2317	CN (5 GL)	
			6850-01-474-2316	DR (55 GL)	
		Type III	6850-01-474-2318	CN (1 GL)	Ideal for use in localities where Type II of this material is restricted or prohibited due to its higher VOC content, vapor pressure, and/or lower flash point. Same as A-A-59601, Type III.
		(Very High Flash Point +200° F/+93° C)	6850-01-474-2320	CN (5 GL)	**NOTE** This solvent must be wiped off the surface completely as it has a very slow evaporation rate.
			6850-01-474-2321	DR (55 GL)	
100	Wipe Solvent, Low Vapor Pressure	P-W-2891			Cleaning of aircraft surfaces prior to painting, sealing, non-structural adhesive bonding, etc., as an alternative for MEK, MIBK, MIL-T-81772, and A-A-59281. Type II, Class B materials are safe to use on windows, windshields/ windscreens, and canopies.
		Type I (Fast Evaporation; Flash Point +100° F/+38° C minimum) Class A (incompatible w/acrylics & polycarbonates)	7930-01-436-8085	CN (1 PT)	
			7930-01-436-8023	CN (1 QT)	
			7930-01-436-8077	CN (1 GL)	
			7930-01-436-7959	CN (5 GL)	
			7930-01-436-8019	DR (55 GL)	
		Type II (Slow Evaporation; High Flash Point +140° F/+61° C minimum) Class B (Acrylic and polycarbonate compatible)	7930-01-436-8024	CN (1 QT)	
			7930-01-436-7904	CN (1 GL)	
			7930-01-436-7953	BX (4 EA, 1 GL BT)	
			7930-01-436-7944	CN (5 GAL)	
			7930-01-436-8013	DR (55 GL)	

Table A-2. Consumable Materials - Continued

Item No	Nomenclature	Specification/Part Number	National Stock Number	Unit of Issue	Intended Use
101	Solvents, Cleaning, for Cleaning Prior to Sealant Application	SAE AMS 3166 PN DS-108 (CAGE Code #30256)	7930-01-367-0994	BX (24 EA, 1 PT BT-Squeeze Trigger)	Cleaning of aircraft, missile, and equipment primary and secondary structural (i.e., metal and composite) surfaces prior to sealing, bonding, and application of adhesion promoters, etc.
			7930-01-367-0995	BX (4 EA, 1 GL BT)	
			7930-01-367-0996	CO (5 GL)	
			7930-01-367-0997	DR (55 GL)	
102	Isopropyl Alcohol, Technical (IPA, 2-Propanol, and/or Isopropanol)	TT-I-735	6810-00-753-4993	CN (½ PT)	Used for removal of fungi (molds) and cleaning of electrical and electronic components and connectors.
			6810-00-983-8551	CN (1 QT)	
			6810-00-286-5435	CN (1 GL)	**CAUTION**
			6810-00-543-7915	CN (5 GL)	Do not use on acrylic plastic materials as it may cause crazing.
			6810-00-586-6647	DR (55 GL)	
103	Aliphatic Naphtha	TT-N-95, Type II (For Cleaning Acrylic Plastics)	6810-00-238-8119	CN (1 GL)	Used for cleaning/degreasing acrylic plastics (i.e., windscreens and canopies).
			6810-00-265-0664	CN (5 GL)	
			6810-00-238-8117	DR (55 GL)	
104	Sealant Remover, Chemical Type	Aerosafe Products Inc. CAGE Code # 1LFP0	Commercial Items		
104 Cont.		Sky Restore®			Used to assist in polysulfide sealant removal by softening the sealant before using a plastic scraper or tool. Applied by non-metallic brush, cloth, or pump spray.
		PN LM306/1 (Thin solution)	8030-01-466-4432	PG (6 EA, 1 L BT)	
		PN LM307/1 (Thick solution)	8030-01-466-4433	PG (6 EA, 1 L BT)	**CAUTION**
					This material has an obnoxious odor. Use in a well ventilated area and/or require personnel to wear an appropriate respirator if in a confined area.

Table A-2. Consumable Materials - Continued

Item No	Nomenclature	Specification/Part Number	National Stock Number	Unit of Issue	Intended Use
		Sky Wash® PN LM308/1	8030-01-466-4431	PG (6 EA, 1 L BT)	Used to neutralize the area from which sealant was removed with the above material. Applied by non-metallic brush, cloth, or pump spray, scrubbed with a non-metallic brush or a cloth, and then wiped dry with a cloth .

APPENDIX B
EQUIPMENT FOR CLEANING AND CORROSION PREVENTION AND CONTROL

B.1 INTRODUCTION.

Table B-2 provides a list of accessories used for aircraft, missile, and equipment cleaning and corrosion prevention and control. Refer to AFMAN 23-110, Volume 2, Part 2, Chapter 22 for EAID authorization of additional equipment. The Table B-2 column headings list: Nomenclature, Specifications/Part Numbers, National Stock Numbers, Units of Issue, and Intended Use. Items are divided into functional groupings as follows:

- Cleaning accessories
- Corrosion removal accessories
- Conversion coating accessories
- Lighting accessories
- Safety accessories
- Sealing accessories

B.1.1 Unit Of Issue Codes. The unit of issue codes used under the unit issue column are shown and explained as follows in Table B-1:

Table B-1. Unit Of Issue Codes

CODE	UNIT	CODE	UNIT	CODE	UNIT
BG	Bag	EA	Each	PG	Package
BO	Bolt	FT	Foot	PR	Pair
BT	Bottle	GL	Gallon	PT	Pint
BX	Box	GR	Gross	QT	Quart
CA	Cartridge	JR	Jar	RO	Roll
CB	Carboy	KG	Kilogram	SE	Set
CC	Cubic Cent.	KT	Kit	SH	Sheet
CN	Can	L	Liter	TU	Tube
CO	Container	LB	Pound	YD	Yard
CS	Case	LG	Length		
DR	Drum	MX	Thousand		
DZ	Dozen	OZ	Ounce		

Table B-2. Equipment For Cleaning and Corrosion Prevention and Control

Item No.	Nomenclature	Specifications/Part Number	National Stock Number	Unit Issue	Intended Use
			Cleaning Equipment		
1	Aircraft Washing Kit, Exterior, Conformable	3M Co. (CAGE Code #76381) PN 251 (Conformable applicator head & 2 EA of each type of pad)	7920-00-490-6046	KT	General cleaning of aircraft, missile, and equipment surfaces. Uses 12 in L x 6 in W x 1 in or in T replacement pads listed as Item # 38 in Appendix A.
2	Sponge, Synthetic	L-S-626, Class 1, Grade B or A-A-2073, Type I, Style B, Class 1	7920-00-633-9915	EA (7 in L x 4¼ in W x 2in T)	Fine pore synthetic sponge for application of cleaning compounds on and scrubbing of painted and unpainted surfaces by hand.
3	Scrub Brush	A-A-2074 (supersedes H-B-1490)			Application of cleaning compounds and scrubbing of painted and unpainted aircraft, missile and equipment surfaces.
		Type I, Style A (Nylon Bristles)	7920-00-619-9162	EA (4½ in x 1¾ in)	
		Type II, Style C (Tampico Bristles)	7920-00-282-2470	EA (10¾ in x 2¾ in)	
		Type IV, Style B (Nylon Bristles)	7920-00-061-0037	EA (8½ in x 5 in)	
		Type IV, Style D (Palmyra Bristles)	7920-01-067-6203	EA (8½ in D)	

Table B-2. Equipment For Cleaning and Corrosion Prevention and Control - Continued

Item No.	Nomenclature	Specifications/Part Number	National Stock Number	Unit Issue	Intended Use
4	Brush, Aircraft Cleaning	MIL-B-23958 Type I (Nylon Bristles)			Application of cleaning compounds and scrubbing of painted and unpainted aircraft, missile and equipment surfaces.
		Style 1	7920-00-054-7768	EA (5 in D)	
		Style 2	7920-00-051-4386	EA (6 in x 2 in)	
		Style 3	7920-00-051-4383	EA (12 in x 3½ in)	
		Type II (Tampico Bristles)			
		Style 2	7920-00-957-5945	EA (6 in x 2½ in)	
		Type III (Nylon / Tampico Bristles)			
		Style 1	7920-00-051-4384	EA (5 in D)	
		Style 2	7920-00-051-4387	EA (6 in x 2 in)	
		Style 3	7920-00-051-4385	EA (12 in x 3½ in)	
		Type IV (Horsehair/Syn-thetic Bristles)			
		Style 4	7920-00-685-5969	EA (10 in x 2¾ in)	
5	Window Brush, Waterproof (Horsehair Bristles)	A-A-3080			Scrubbing aircraft, missile, and equipment painted and unpainted surfaces, windows, windshields, and/or windscreens.
		Type I (Round)	7920-00-240-7176	EA (4.5 in D)	
			7920-00-297-1509	EA (8 in D)	
		Type II (Rectangular)	7920-01-136-8892	EA (6 in x 4 in)	
6	Toothbrush, Soft Bristle, Straight Line Design.	A-A-59 (Children's - 30 Tufts)	8530-01-293-1388	DZ	Cleaning intricate parts. Before using, ensure chemicals will not dissolve or soften brush handle and bristles.
		A-A-123 (Adult's - 30 Tufts)	8530-01-293-1387	DZ	

Table B-2. Equipment For Cleaning and Corrosion Prevention and Control - Continued

Item No.	Nomenclature	Specifications/Part Number	National Stock Number	Unit Issue	Intended Use
7	Handles, Wood, Acme Threaded and Tapered Ends	A-A-3082 (supersedes NN-H-104)			Handles for use with scrub/cleaning brushes (Items 3 & 4) and aircraft washing kit (Item 1).
		Type I (Threaded metal end)			
		$^{7}/_{8}$ in D x 4 ft L	7920-00-982-6512	EA	
		Type II (Tapered end)			
		15/16 in D x 4½ L	7920-00-177-5106	EA	
		15/16 in D x 5 ft L	7920-00-263-0328	EA	
		1 in D x 4½ L	7920-00-141-5452	EA	
		1 in D x 8 ft L	7920-00-263-0327	EA	
		1 in D x 4¼ ft L	7920-00-263-0324	EA	
8	Handle, Acme Threaded End (Telescopic)	A-A-1464 ($^{7}/_{8}$ in D)	7920-00-926-5146	EA	A 5 ft to 10 ft extendable aluminum handle for scrub/cleaning brushes (Items 3 &4) or aircraft washing kit (Item 1) to clean high surfaces on aircraft or equipment.
9	Nozzles, Garden Hose (For $^{5}/_{8}$ and ¾ in Hose) Adjustable	A-A-50461			Spraying and rinsing of aircraft, missiles, and equipment during cleaning operations.
		Straight, Adjustable Spray (Brass)	4730-00-223-6731	EA	
		Pistol Grip, Adjustable (Copper Alloy w/Rubber Cover) PN 10855; CAGE Code # 97141	4730-00-900-0733	EA	
10	Hose and Hose Assemblies, Non-Metallic (Rubber, Plastic)	A-A-59270 (supersedes L-H-520)			Spraying and rinsing of aircraft, missiles, and equipment during cleaning operations.
		Type I, Class I (Rubber)			
		$^{5}/_{8}$ in ID x 50 ft L	4720-00-203-3920	EA	
		¾ in ID x 50 ft L	4720-00-203-3912	EA	
		Type II, Grade A (PVC)			
		$^{5}/_{8}$ in x 50 ft	4720-00-729-5334	EA	
		¾ in x 50 ft	4720-00-729-5338	EA	
11	Pump, Backpack (5 GL capacity)	PN: 5100-254B CAGE Code # 04024	4320-00-289-8912	EA	Localized small area cleaning and rinsing of aircraft, missile, and equipment surfaces.
12	Sprayers Insecticide, Manually-Carried, Hand Operated-Compression	A-A-55748	3740-00-191-3677	EA (1 GL capacity)	Used to apply soil barrier material on aircraft surfaces
		(supersedes MIL-S-14102)	3740-00-641-4719	EA (2 GL capacity)	

Table B-2. Equipment For Cleaning and Corrosion Prevention and Control - Continued

Item No.	Nomenclature	Specifications/Part Number	National Stock Number	Unit Issue	Intended Use
13	Guns, Spray, Oils and Solvent	SAE AMS-G-952 (supersedes MIL-G-952) Type I	4940-00-248-0866	EA	Non-atomizing, trigger operated spray nozzle for spraying cleaning compounds on aircraft, missiles, and equipment.
14	Cleaning Unit, Portable, Foam Generating Stainless Steel Tank (Porta-Foamer)	PN 0020SS CAGE Code # 21361	4940-01-058-5267	EA (15 GL capacity)	Foam applicator for MIL-PRF-87937 and MIL-PRF-85570 cleaning compounds for cleaning aircraft, missile, and equipment exteriors. Uses compressed air to spray water detergent solutions. May also be used to apply cleaning solvents for cleaning engines and other equipment. A gun type spray wand and nozzle is included.
		PN 9488-7023 CAGE Code # 85884	4940-01-041-5680	EA (45 GL capacity)	
15	Cleaner, Pressure, Solvent-Water (Universal Wash Unit)	PN 21C2438G01 CAGE Code # 99207	4940-01-185-6215	EA	Used to apply cleaning compound solutions in a non-foam state to aircraft, missile, and equipment exterior surfaces at a rate of 2½ GL/ min. at 30 PSI pressure.
16	Cart, Corrosion Control (Turbine Engine Cleaning)	Model # 62555 PN 65A102J1 CAGE Code # 0GZN8	4920-00-930-1801	EA	Portable cleaning machine for cleaning and rinsing aircraft turbine engines.
17	Deicer, Aircraft (Truck Mounted)	Model # 58323 PN D40-D CAGE Code #'s 58323 & 93408	1730-01-093-6517	EA	Truck mounted spray unit used to spray deicing and anti-icing fluids on aircraft exterior surfaces.
18	Heater, Gun, Electric Type	A-A-59435			To thaw or dry equipment/components or to shrink heat shrink type insulating tubing associated with electrical applications.
		Type I (350° -500° F)	4940-00-357-1369	EA	
		Type II (500° -750° F)	4940-01-028-7493	EA	
		Type III (750°-1000° F)	4940-01-391-7046	EA	
19	Vacuum Cleaner, Pneumatic	PN AT560ACF-18 CAGE Code # 00784	5130-01-368-5861	EA	Small, light-weight, aluminum, venturi type, hand held vacuum cleaner with 18 in L flexible hose for removing dirt and debris from aircraft, missile, and equipment interiors.
20	Vacuum Cleaner (with attachments)	Pneumatic Type PN 15-A1080 CAGE Code # 58150	7910-00-807-3704	EA	For removing dirt, debris, and fluids from aircraft, missile, and equipment interiors.
		Electric Type (A-A-54943) PN C83985-01 CAGE Code # 16893	7910-01-236-0893	EA	For removing dirt, debris, and fluids from aircraft, missile, and equipment interiors. This vacuum cleaner can also be used to remove infectious waste materials.

Table B-2. Equipment For Cleaning and Corrosion Prevention and Control - Continued

Item No.	Nomenclature	Specifications/Part Number	National Stock Number	Unit Issue	Intended Use
21	Bottle, Applicator, 16 OZ Capacity (Adjustable Spray Nozzle)	A-A-2806	8125-00-488-7952	EA	Spraying of cleaning compound solutions on small areas of aircraft, missile, and equipment surfaces.
22	Spray Kit, Self Pressurized Trigger Spray, Poly-ethylene Bottle (32 OZ Capacity)	PN 4382T1 CAGE Code # 39428	4940-01-364-8761	EA	Spraying of cleaning compound solutions on small areas of aircraft, missile, and equipment surfaces
23	Utility Pail, Plastic (3 GL Capacity)	A-A-59253 (supersedes L-P-65) Size 4; Style B	7240-00-246-1097	EA	Container for holding water and chemical solutions for cleaning and corrosion treatment operations.
			Conversion Coating Equipment		
24	Brush, Acid Swabbing (Metal Handle/ Horsehair & Hog Bristle Brush)	A-A-289, Type II, Class 1, Size 1	7920-00-514-2417	GR (5¾ in L x in W)	Disposable brush for applying chemical conversion coating solutions and some brushable sealants.
25	Moistener, Paper Sealing, Fountain-Type (Sponge Moistener Stick)	A-A-137 (supersedes GG-M-571)	7520-00-241-2981	EA	Application of chemical conversion coating solutions to small areas.
26	Wash Bottle, Laboratory, Polyethylene (250 ml. Capacity)	Commercial Item CAGE Code # 25518	6640-00-299-8493	EA BX (12 EA)	Used for rinsing chemically treated surfaces.
Corrosion Removal Equipment					
27	Drill, Pneumatic, Portable (¼ in Chuck; 3200 RPM)	OO-D-691			Corrosion removal and scuff sanding .
		Type I, Style C (Straight Drive, Pistol Grip)	5130-00-294-9511	EA	
		Type I, Style A (90° Angle Drive, Body Grip)	5130-00-293-1977	EA	
28	Key, Drill Chuck (¼ in Drive)	A-A-50966 PN K1 CAGE Code # 75078	3460-00-264-5577	EA	Securing or releasing drill bit. For use with Item # 27 drill motor.
29	Sander, Pad, Pneumatic (Orbital Motion) 6,000 - 9,000 RPM	A-A-2687 (OO-S-101, Type I, Style 1)	5130-00-606-9694	EA	Corrosion removal and blend out as well as scuff sanding, finish sanding, and feather edging/blending of paint surfaces.

Table B-2. Equipment For Cleaning and Corrosion Prevention and Control - Continued

Item No.	Nomenclature	Specifications/Part Number	National Stock Number	Unit Issue	Intended Use
30	Sander, Disc, Pneumatic, Portable (Random Orbital) Dual motion, vertical drive with 6 in D max pad & 7000 RPM max (unloaded)	A-A-2690 (OO-S-101, Type II, Style 3)	5130-00-204-0623	EA	Corrosion removal and blend out as well as scuff sanding, finish sanding, and feather edging/blending of paint surfaces. The sander's random orbital action prevents scratches and swirl marks.
31	Sander, Disc, Pneumatic, Portable (Right Angle) Right angle drive with 7 in D pad max & 6000 RPM max (unloaded)	A-A-2689 (OO-S-101, Type II, Style 2)	5130-00-596-1176	EA	Corrosion removal and blend out. Right angle drive makes it easier to use in corners, along edges, and in tight spaces.
32	Dry Honing Machine, Portable, Air-Operated (Vacu-Blaster)	PN 41303 CAGE Code # 62555	4940-00-872-1712	EA	A compact, self-contained, light weight abrasive blasting unit used for the safe and convenient removal of corrosion products from aircraft, missile and equipment surfaces and their components with no hazardous particle emissions. All abrasive particles, corrosion products, and paint chips are drawn back into the machine where residues are filtered out and collected for disposal, and the abrasive particles are recycled.
33	Electrical Pump Kit for Dry Honing Machine (Item # 32)	PN 918708 CAGE Code # 62555	4940-00-948-3810	EA	The electric pump for the Dry Honing Machine allows use of low pressure/low volume air to operate instead of the low pressure/high volume air required to operate units equipped with the air ejector pump.
34	Gun, Air Blow, (Blast Cleaning)	A-A-55543 (supersedes GGG-G-770)			Use to remove chips, dirt, and waste material from machines, work pieces, or benches.
		Type II (push button), Style B (in Int. Thd.)	4940-00-223-8972	EA	
		Type II (push button), Style A (¼ in Int. Thd.)	4940-00-333-5541	EA	

Table B-2. Equipment For Cleaning and Corrosion Prevention and Control - Continued

Item No.	Nomenclature	Specifications/Part Number	National Stock Number	Unit Issue	Intended Use
35	Air Hose Assemblies, General Purpose Hose and Hose Assemblies, Non-Metallic Spray	A-A-59613 (supersedesZZ-H-521)			Hose assemblies used with pneumatic tools, paint spray guns, and dry honing machines.
		in ID x 50 ft	4720-00-289-3429	FT	
	Hose, Rubber, and Hose Assemblies, Rubber, Pneumatic (Yarn and Fabric Reinforced)	A-A-59265 (supersedesZZ-H-500)			
		½ in ID x 50’	4720-00-278-4889	FT	
		$^5/_8$ in ID x 50 ft	4720-00-278-4890	FT	
		¾ in ID x 50 ft	4720-00-278-4891	FT	
36	Coupling Halves, Quick-Disconnect	A-A-59439 (supersedesMIL-C-4109) Type II (Male)			
		¼ in NPT/M end (Style 1)	4730-00-494-3271	EA	Male quick disconnect halves for use with pneumatic tools and paint spray guns.
		in NPT/F end (Style 2)	4730-00-293-7182	EA	
		in Shank end (Style 3)	4730-00-277-5679	EA	
		½ in NPT/M end (Style 1)	4730-00-293-7165	EA	Male quick disconnect halves for use with portable dry honing machines.
		½ in NPT/F end (Style 2)	4730-01-233-3434	EA	
		¾ in NPT/M end (Style 1)	4730-00-293-7180	EA	
		Type I (Female)			
		¼ in NPT/F end (Style 2)	4730-01-177-0987	EA	Female quick disconnect halves for use with pneumatic tools and paint spray guns.
		in NPT/M end (Style 1)	4730-00-203-0178	EA	
		in Shank end (Style 3)	4730-00-494-3272	EA	
		½ in NPT/M end (style 1)	4730-00-203-4847	EA	Female quick disconnect halves for use with portable dry honing machines.
		½ in Shank end (Style 3)	4730-00-905-9794	EA	
		¾ in NPT/M end (Style 1)	4730-00-293-7043	EA	
37	Hose Clamp	A-A-52506 (supersedes WW-C-440)	4730-00-826-4268	EA	Metal hose clamp used for holding flexible ducts or hoses on to a male end or a
38	Hand Pad Holder (for use with Item # 1, Appendix A)	3M Co. PN 952 (INSTA-LOK) CAGE Code # 28124	Commercial Item Open Purchase	EA	Hand tool for holding abrasive pads.

Table B-2. Equipment For Cleaning and Corrosion Prevention and Control - Continued

Item No.	Nomenclature	Specifications/Part Number	National Stock Number	Unit Issue	Intended Use
39	Holder, Disk Pad, Hook and Loop Type (for use with Item # 47)	3M Co. (CAGE Code # 28124)			Back-up pad to run surface conditioning discs on a drill motor.
		PN 9215	Commercial Item	EA	
		(1½ in D on ¼ in shank)	Open Purchase		
		PN 048011-07494-8	Commercial Item	CS (10 EA)	
		(2 in D on ¼ in shank)	Open Purchase		
		PN 923			
		(3 in D on ¼ in shank)	5345-01-342-5932	EA	
		PN 048011-07492-4	Commercial Item	CS (5 EA)	
		(4 in Don ¼ in shank)	Open Purchase		
		PN 048011-05680-7	Commercial Item	EA	
		(5 in Don ¼ in shank)	Open Purchase		
40	Pad, Abrasive Disk Holder (for use with Item # 5, Appendix. A)	3M Co. (CAGE Code # 28124)			Back-up pad to run 6 in D abrasive paper discs on a dual motion type sander.
		PN 051144-05576	5130-01-075-8137	EA	
41	Mandrels (for use with Item #'s 42 and 43)	3M Co. (CAGE Code # 28124)			
		PN 990 (in shank)	Open Purchase	BX (5 EA)	For use with 2 - 3 in D radial bristle discs stacked from to ½ in W
		PN 991 (in shank)	Open Purchase	BX (5 EA)	For use with 2 - 3 in D radial bristle discs stacked from ¾ in to 1 in W
		PN 933 (2 in L; ¼ in shank w /1 in D washer)	3460-01-044-2626	EA	For use with 2 to 3 in D abrasive discs.
		PN 934, (3 1/16 in L; ¼ in shank w/ 2½ in D washer)	3460-00-150-7164	EA	For use with 3 to 6 in D abrasive discs.
		PN 935, Split Mini Mandrel (2 in L; ¼ in shank)	3460-00-150-7163	EA	For use with 1 in W x 1½ in L pieces of abrasive material to fit into tight areas for corrosion removal.

Table B-2. Equipment For Cleaning and Corrosion Prevention and Control - Continued

Item No.	Nomenclature	Specifications/Part Number	National Stock Number	Unit Issue	Intended Use
42	Roloc™ Disc Pad Holders for In Line Bristle Discs (Item # 45) and Roloc™-Coated Abrasive Discs (Item # 46)	3M Co. (CAGE Code # 28124)	Commercial Items		Used to hold Roloc™ in-line bristle discs and coated abrasive discs for installation on either in line or right angle drill motors.
		PN 051144-45101 (1 in D Holder)	Open Purchase	BX (5 EA)	
		PN 051144-45095-4 (2 in D Holder)	Open Purchase	BX (5 EA)	
		PN 051144-45092-3 (3 in D Holder)	Open Purchase	BX (5 EA)	
		PN 051144-45179-1 (4 in D Holder)	Open Purchase	BX (5 EA)	
		PN 051144-45102-9 (¼ in D threaded shaft)	Open Purchase	EA	
43	Wheel, Flap Brush, Abrasive (Non-woven nylon flaps with aluminum oxide abrasive; Maroon in color) (6 in D x 1 in W x 2 in arbor hole)	3M Co. (CAGE Code # 28124)	Commercial Items		Removing mild corrosion from and polishing of surfaces. Also for mechanical removal and feathering of paint systems. Maximum operating speed (MOS) is 3400 RPM. Used on PN 934 mandrel (Item # 41 above).
		PN 5A FN 6X1X2 (fine grit)	5345-00-151-7936	EA	
		PN 5A MD 6X1X2 (medium grit)	5345-00-157-9790	EA	

Table B-2. Equipment For Cleaning and Corrosion Prevention and Control - Continued

Item No.	Nomenclature	Specifications/Part Number	National Stock Number	Unit Issue	Intended Use
44	Stackable Radial Bristle Discs, (Regalite™/Aluminum Oxide & Cubitron Abrasive)	3M Co. (CAGE Code # 28124)	Commercial Items		Removing mild corrosion and polishing surfaces and de-burring. Also for mechanical removal of cured sealants, adhesives, paints, and feathering of paint systems. Use with a drill and a # 934, 990, or 991 mandrel as appropriate. Can be used to reach into deep depresssions and cavities. Can be used on in-line or right angle drill motors. The MOS is 25,000 RPM.
		3 in D - Mandrel Mounted			
		PN 048011-24279-8 (Grade 50 - Green Color)	Open Purchase	CS (40 EA)	
		PN 048011-24280-4 (Grade 80 - Yellow Color)	Open Purchase	CS (40 EA)	
		PN 048011-24281-1 (Grade 120 - White Color)	Open Purchase	CS (40 EA)	
		PN 051131-07544-3 (Grade 120 - White Color; Thick Bristles)	3460-01-509-1789	CS (40 EA)	
		Roloc™ Disc Pad Holder Mounted			
		PN 048011-24276-7 (Grade 50 - Green Color)	Open Purchase	S (40 EA)	
		PN 048011-24277-4 (Grade 80 - Yellow Color)	Open Purchase	CS (40 EA)	
		PN 048011-24278-1 (Grade 120 - White Color)	Open Purchase	CS (40 EA)	
		Roloc™ Disc Pad Holder for these Radial Bristle Discs PN 051144-45101-2	Open Purchase	BX (5 EA)	

Table B-2. Equipment For Cleaning and Corrosion Prevention and Control - Continued

Item No.	Nomenclature	Specifications/Part Number	National Stock Number	Unit Issue	Intended Use
45	Roloc™ In Line Bristle Discs (RegaliteRoloc™/Aluminum Oxide & Cubitron Abrasive)	3M Co. (CAGE Code # 28124)	Commercial Items		Removing mild corrosion and polishing surfaces and de-burring. Also for mechanical removal of cured sealants, adhesives, and paints and feathering of paint systems. Can be used on in line or right angle drill motors after mounting on an appropriate Roloc™ disc pad holder (Item # 42) The maximum operating speed (MOS) depends on the diameter of the disc.
		1 in D w/ $^5/_8$ in L bristles			
		PN 048011-18698-6 (Grade 50 - Green Color)	Open Purchase	CS (80 EA)	
		PN 048011-18706-8 (Grade 80 - Yellow Color)	Open Purchase	CS (80 EA)	
		PN 048011-18710-5 (Grade 120 - White Color)	Open Purchase	CS (40 EA)	
		2 in D w/ $^5/_8$ in L bristles			
		PN 048011-18730-3 (Grade 50 - Green Color)	Open Purchase	CS (40 EA)	
		PN 048011-18732-7 (Grade 80 - Yellow Color)	5345-01-432-3032	CS (40 EA)	
		PN 048011-18733-4 (Grade 120 - White Color)	3460-01-509-1806		
		3 in D w/ $^5/_8$ in L bristles			
		PN 048011-18734-1 (Grade 50 - Green Color)	Open Purchase	CS (40 EA)	
		PN 048011-18736-5 (Grade 80 - Yellow Color)	Open Purchase	CS (40 EA)	
		PN 048011-18737-2 (Grade 120 - White Color)	3460-01-509-1829	CS (40 EA)	

Table B-2. Equipment For Cleaning and Corrosion Prevention and Control - Continued

Item No.	Nomenclature	Specifications/Part Number	National Stock Number	Unit Issue	Intended Use
46	Roloc™ Coated Abrasive Discs (Regalite™/Aluminum Oxide & Cubitron Abrasive) and Nylon Mat Discs (Aluminum Oxide Abrasive); For use with Item # 42	3M Co. (CAGE Code # 28124)	Commercial Items		For removal of moderate to severe corrosion from thick cross section aluminum, steel, and magnesium structures when mounted on Item # 42 disc pad holders and installed on either in-line or right angle drill motors. Use of these abrasive discs should be followed by smoothing out the area with a less aggressive abrasive disc such as an Item # 47 surface conditioning disc (very fine grit).
		Grade- 80 grit			
		PN 051144-14661-1 (2 in D disc)	5345-01-420-1457	CS (200 EA)	
		PN-051144-76634-5 (3 in D disc)	Open Purchase	CS (200 EA)	
		PN 051144-83693-2 (4 in D disc)	Open Purchase	CS (100 EA)	
		Grade - 100 grit			
		PN 051144-80508-2 (2 in D disc)	Open Purchase	CS (200 EA)	
		PN 051144-80509-9 (3 in D disc)	Open Purchase	CS (200 EA)	
		PN 051144-83694-9 (4 in D disc)	Open Purchase	CS (100 EA)	
		Grade- 120 grit			
		PN 051144-80512-9 (2 in D disc)	5345-01-420-1453	CS (200 EA)	
		PN 051144-80513-6 (3 in D disc)	Open Purchase	CS (200 EA)	
		PN 051144-83695-6 (4 in D disc)	Open Purchase	CS (100 EA)	
		Very Fine Grit (Blue Color)			
		PN 048011-05523 (2 in D-Scotch Brite Disc)	5345-01-367-7680	CS (200 EA)	
		PN 048011-05530 (3 in D Scotch Brite Disc)	5345-01-397-5253	CS (100 EA)	

Table B-2. Equipment For Cleaning and Corrosion Prevention and Control - Continued

Item No.	Nomenclature	Specifications/Part Number	National Stock Number	Unit Issue	Intended Use
47	Surface Conditioning Discs, Aluminum Oxide (for use with Item # 39)	3M Co. (CAGE Code # 28124)	Commercial Items		Corrosion removal and surface preparation. The discs produce minimal metal/substrate removal. They perform best on right angle type drill motors, but can be used successfully on in-line drill motors. Discs are mounted on the appropriate sized disc pad holder (Item # 39) which is then mounted into either an in-line or a right angle drill motor.
		Very Fine Grit (Blue Color)			
		PN 048011-04T75-6 (1½ in D)	Open Purchase	CS (200 EA)	
		PN 048011-04T77-0 (3 in D)	Open Purchase	CS (100 EA)	
		PN 048011-04278-7 (4 in D)	Open Purchase	CS (100 EA)	
		PN 048011-04303-6 (5 in D)	Open Purchase	CS (50 EA)	
		Medium Grit (Maroon Color)			
		PN 048011-04122-3 (1½ in D)	Open Purchase	CS (200 EA)	
		PN 048011-07459-7 (2 in D)	Open Purchase	CS (200 EA)	
		PN 048011-04124-7 (3 in D)	Open Purchase	CS (100 EA)	
		PN 048011-07451-1 (4 in D)	Open Purchase	CS (100 EA)	
		PN 048011-00643-7 (5 in D)	Open Purchase	CS (50 EA)	
48	COMBI-S Wheel with Spindle Mount, Aluminum Oxide, Maroon Color (3 in D x 1¾ in W w/¼ in D shank)	3M Co. (CAGE Code # 28124)			Combination of aluminum oxide coated abrasive and non-woven nylon material used for finishing, blending, and removing light to medium corrosion. MOS is 8000 RPM.
		120 grit			
		PN 051144-80678	Open Purchase	EA	
		180 grit			
		PN 051144-80799	Open Purchase	EA	

Table B-2. Equipment For Cleaning and Corrosion Prevention and Control - Continued

Item No.	Nomenclature	Specifications/Part Number	National Stock Number	Unit Issue	Intended Use
49	Abrasive Wheels, Non-Woven Nylon, Resin Reinforced (Aluminum Oxide Abrasive)	A-A-59292 (Supersedes MIL-W-81319, Type I) Class 2 (Laminated)			Removing medium to severe corrosion (e.g. intergranular, exfoliation) from thick materials.
		Grade C (Medium) -150 grit (3 in D x ¾ in W on ¼ in D shaft)	5345-00-732-9989	EA	**CAUTION**
		Grade A (Very Fine) - 280 grit (2 in D x ½ in W on ¼ in D shaft)	5345-00-935-7869	EA	These wheels are very aggressive and will remove metal substrate as well as corrosion products.
		Grade B (Fine) - 180 Grit (6 in D x ¾ in W with ½ in arbor hole)	3460-01-479-5941	EA	
50	Abrasive Disk Kit (Composite Material Repair)	PN 65001 CAGE Code # 00179	5345-01-015-1419	KT	For use in repair of composite and honeycomb materials ONLY. Comes with 3 disc holders (1 in, 2 in, and 3 in D sizes) and 150 discs of assorted grits (50 in each size).
51	Files, Rotary, Cone Shape, High Speed Steel or Tungsten Carbide	A-A-51176 Type II (Tungsten Carbide) Style A (RH spiral flute), Class B (medium), Size 5 (¼ in D x ½ in L)	3455-00-293-3560	EA	Removing severe corrosion (e.g. intergranular and exfoliation) and underlying metal; attach to a straight in-line pneumatic drill.
		Style B (RH spiral flute w/chip breaker), Class C (Fine), Size 6 (¼ in D x ¾ in L)	3455-00-293-3559	EA	**CAUTION**
		Style A, Class C, Size 7 (¼ in D x 1 in L)	3455-00-293-3561	EA	Rotary files are extremely aggressive tools and can easily remove too much metal substrate. Pay strict attention, and take extra care when using these tools.

Table B-2. Equipment For Cleaning and Corrosion Prevention and Control - Continued

Item No.	Nomenclature	Specifications/Part Number	National Stock Number	Unit Issue	Intended Use
52	Aircraft Adhesive and Decal Removal Disc (AADR), Non-abrasive	3M Co. (CAGE Code # 52152) PN 051131-07498 (6 in D x $^{5}/_{8}$ in W on Roloc™ Holder w/ in D shank)	Commercial Items 3460-01-447-8021	CS (5 EA Discs w/1 Holder)	Used on a pneumatic drill to remove adhesives, sealants, decals, graphics, vinyl stripping tapes, double-sided molding tapes, and leading edge tapes without removing/damaging the under-coatings. Recommended operating speed is 2600 RPM; do not exceed 4000 RPM. **NOTE** Do not use on acrylic lacquer paints and polycarbonate or acrylic plastics (canopies, windows, and windscreens).
		PN 048011-24105-0 (1 EA 2 in, 3 in, 4, 5, 6 in D x $^{5}/_{8}$ in W Disc w/1 EA Roloc™ Holder w/ in D shank)	Open Purchase	CS (5 EA Discs w/1 Holder)	

Table B-2. Equipment For Cleaning and Corrosion Prevention and Control - Continued

Item No.	Nomenclature	Specifications/Part Number	National Stock Number	Unit Issue	Intended Use
53	Sealant (Mastic) Removal Kits	Kell-Strom Tool Co, Inc. (CAGE Code # 75245)	Commercial Items		Used to remove cured sealant that over-coats fastener patterns or fillet seals at structure edges with sharpened plastic and/or steel blades mounted in a pneumatic powered vibratory tool or a manual hand held support handle. Can also be used to remove anti-skid materials from aircraft floors/decks.
	Pneumatic Vibro-Gun Sealant Removal Kit - Case containing 1 Vibro-Gun with air hose, blade sharpener with aggregate disc and vacuum, extra disc PN OZ7005) and vacuum bags PN OZ7004), 6 EA 1 in W (PN OZ7001) & 2 EA ½ in W (PN OZ7002 rigid plastic blades, & 1 EA 2 in W (PN OZ7003) flexible steel blade	PN OZ7000 (Vibro-Gun Sealant Removal Kit	4920-01-500-8087	EA	
		PN OZ7006 (Vibro-Gun only)	4920-01-500-8084	EA	
		PN OZ7007 (Hand Type Sealant Removal Kit)	4920-01-500-8090	EA	
	Hand Type sealant Removal Kit - Case containing 1 EA padded palm support handle (PN OZ7008); 6 EA 1 in W (PN OZ7001), 3 EA ½ in W (PN OZ7002), 3 EA 1½ in W (PN OZ7010), & 3 EA 1 in W (button head rivet adaptable) rigid plastic blades; 2 EA sharpening stones (PN OZ7009); & 2 EA small cleaning brushes	Anti Static Air Hoses			
		PN OZ7013 (50 ft L)	Open Purchase	EA	
		PN OZ7014 (100 ft L)	Open Purchase	EA	
		Replacement parts - use PN's at left to order	Open Purchase		

Table B-2. Equipment For Cleaning and Corrosion Prevention and Control - Continued

Item No.	Nomenclature	Specifications/Part Number	National Stock Number	Unit Issue	Intended Use
54	Sealant Removal Tools (Drill Motor Mounted SR Cutters & Discs)	3M Co. (CAGE Code # 76381)	Commercial Items		These plastic cutters and small bristle discs are particularly useful for removal of sealant coatings on and around protruding fasteners and lap type seams. They provide effective sealant removal while minimizing contamination of the surrounding area and the subsequent required clean up.
		PN 61-5001-7576-7 (# 8 SR Cutter - 1 in D)	3455-01-509-1769	BX (40 EA)	
		PN 61-5001-7577-5 (# 3 SR Cutter - in D)	3455-01-509-1779	BX (40 EA)	
		PN 61-5001-7578-3 (2 in SR Radial Bristle Disc)	3460-01-509-1794	BX (40 EA)	
		PN 61-5001-7579-1 (3 in SR Radial Bristle Disc)	3460-01-509-1791	BX (40 EA)	
		PN 61-5000-7816-9 (Roloc™ Pad & # 1 Plastic Holder)	3460-01-509-1784	BX (5 EA)	
		PN 61-5000-7412-7 (Roloc™ Pad & # 7 Plastic Red Button for Holder)	3460-01-509-1812	BX (5 EA)	
		PN 61-5000-7334-3 (# 990 Mandrel)	3460-01-493-7924	BX (5 EA)	
	Envision Pneumatic Sealant Removal Kit (In-cludes: 1 EA Ingersoll-Rand 1000 RPM right angle drive, ¼ in threaded chuck pneumatic drill motor; 1 tube with 5 EA # 8 SR cutters; and 1 tube with 5 EA # 3 SR cutters	PN QA0859D-1 CAGE Code # 2A178	5130-01-514-0853	Kit	
55	Optical Depth Micrometer Kit (Digital read-out) PREFERRED TOOL	PN 8400K CAGE Code # 65956	6650-01-220-8942	EA	Inspection of and depth, width, and length measurements of corrosion damage and corrosion grind out areas.

Table B-2. Equipment For Cleaning and Corrosion Prevention and Control - Continued

Item No.	Nomenclature	Specifications/Part Number	National Stock Number	Unit Issue	Intended Use
56	Optical Depth Micrometer Kit (Analog, mechanical readout) ALTERNATE TOOL	PN 966A1 CAGE Code # 92541	6650-00-831-5532	EA	Inspection of and depth, width, and length measurements of corrosion damage and corrosion grind out areas.
57	Depth Gauge, Needle Point Dial Indicator	PN 6527281 CAGE Code # 70168	5210-00-710-4359	EA	Precision measurement of corrosion damage and corrosion grind out depth within a range of 0.0in to 0.125 in.
58	Magnifying Glass, Folding Pocket Triple Lens Type (Circular shape - ½ in D)	PN 81-23-95 CAGE Code # 06175	6650-00-530-1880	EA	Inspection of corrosion. Magnifying power of the lenses are 5X, 7X, and 10X. Lenses pivot for either single or combination use.
59	Inspection Mirror	GGG-M-350, Type II (plunger activated), Class 3 (rectangular)			Aid for inspecting hard to see areas for corrosion.
		Size 1 (1½ in L x 1¼ in W)	5120-00-278-9926	EA	
		Size 2 (2 in L x 1¾ in W)	5120-00-618-6902	EA	
60	Pencil, Aircraft Marking (Non-Corrosive - 7 in L)	MIL-P-83953			Identification/marking of corroded areas.
		Yellow	7510-00-537-6930	DZ	
		Red	7510-00-537-6935	DZ	
		Blue	7510-01-177-1527	DZ	
61	Brush, Plater's Hand Type (Curved Handle Style)	A-A-3118, Type I, Class 2 (supercedes H-B-178)	7920-00-244-7431	EA	A 13 in overall length brush with a 5¼ in L x 1¼ in W brush area having 4 rows of 1 in L bristles used to remove loose corrosion products and flaking paint and to apply cleaning solvents and compounds.
62	Hand Brush, Wooden Handle, (Stainless Steel Fill)	PN 15SS CAGE Code # 17987	7920-00-900-3577	EA	A 7¾ in overall length brush with a 1 L x in W brush area of 7/16 in L 5 mil D SS bristles used to remove corrosion from aluminum alloy surfaces.
63	Flashlight, Adjustable Beam, Metal/Plastic Case				

Table B-2. Equipment For Cleaning and Corrosion Prevention and Control - Continued

Item No.	Nomenclature	Specifications/Part Number	National Stock Number	Unit Issue	Intended Use
	Non-Rechargeable	PN 101-000-002 CAGE Code # 06134	6230-01-247-7549	EA	Use for corrosion inspection.
	Rechargeable	PN 106-000-003 CAGE Code # 06134	6230-01-152-5952	EA	
64	Shears and Scissors	GGG-S-278 Straight Shears (9 in L)	5110-00-161-6912	EA	Cutting tapes, cheese-cloth, masking materials, electrical wires, etc.
		Electrician's Scissors (5 in L w/wire strip notches)	5110-00-212-7455	EA	
65	Separators, Air and Water, Compressed Air (air regulator assembly)	A-A-59436 (supersedes MIL-S-12928)			Wall-mounted separators designed to remove oil, water, and foreign particles from compressed air, and to regulate the delivery pressure of air used for spray paint guns and pneumatic tools.
		Class 1 (1 regulator, 2 outlets)	4940-00-242-4100	EA	
		Class 2 (2 regulators, 4 outlets)	4940-00-242-4101	EA	
66	Paint Brush, Flat, Metal Bound, Synthetic Fiber	H-B-420, Type II, Grade B			Used to apply brushable sealants and adhesives.
		1 in W	8020-00-263-3866	EA	
		2 in W	8020-00-550-8359	EA	
67	Mixers, Liquid, Revolving Shaft and Agitator Types	A-A-59433 (supersedes (supersedes MIL-M-3070)			Used to mix two component sealants before application.
		Type I - Revolving Shaft	4940-00-221-1707	EA	
		Class 1 - ½ hp (115V) electric motor			
68	Spray Kit, Self Pressurized (Kit contains 4 EA spray devices, 20 EA dip tubes, 4 EA jar containers for materials, and 10 EA cans of non -Class 1 ODS propellant)	SAE AS22805 (supersedes MIL-S- 22805)			Use for applying paints, degreasing compounds, preservatives (CPC's), and other touchup materials when other spray application equipment is impractical.
		Model 8011 Power Pak	4940-00-803-6444	KT	
69	Psychrometer	A-A-2579			Measurement of relative humidity and dew point to assist in determination of cure time for sealants, adhesives, and paints.
		Sling, Pocket Type	6685-00-826-1662	EA	
		Psychro-Dyne; PN WE-22014; CAGECode# 66420	6685-01-263-8370	EA	
	Safety Equipment (Refer to Figure B-1 thru B-3 at the end of this appendix for illustration of some items in this section)				

Table B-2. Equipment For Cleaning and Corrosion Prevention and Control - Continued

Item No.	Nomenclature	Specifications/Part Number	National Stock Number	Unit Issue	Intended Use
		NOTE			
	Consult local Safety and Bioenvironmental Engineering Offices for Personal Protective Equipment (PPE) requirements. These offices have authority to substitute equivalent safety equipment when appropriate.				
70	Particulate Respirator (½ Facepiece Mask), Disposable Type	3M Co. (CAGE Code #50378)			Personnel protection from inhalation of dust and particulates during light sanding and grinding operations.
		PN 8511	4240-01-247-2348	BX (80 EA)	
71	Full Facepiece Respirator, Air Filtering (w/o Cartridges or Retainers)	3M Co. (CAGE Code # 50378)			Personnel protection from inhalation of organic vapors, dust, particulates, and paint sprays in non-confined areas during spraying, sanding, and grinding operations.
		PN 7800S-S (Small)	4240-01-314-2780	EA	
		PN 7800S-M (Medium)	4240-01-342-5239	EA	
		PN 7800S-L (Large)	4240-01-301-3200	EA	
72	Full Facepiece Respirator, Air Filtering (w/o Cartridges or Retaners)	3M Co. (CAGE Code # 50378)			Personnel protection from inhalation of organic vapors, dust, particulates and paint sprays in non-confined areas during spraying, sanding, and grinding operations.
		PN 6700 (Small)	4240-01-454-8531	BX (4 EA)	
		PN 6800 (Medium)	4240-01-454-8535	BX (4 EA)	
		PN 6900 (Large)	4240-01-454-8538	BX (4 EA)	
73	Half Facepiece Respirator, Air Filtering (w/o Cartridges or Retainers)	3M Co. (CAGE Code # 50378)			Personnel protection from inhalation of organic vapors, dust, particulates, and paint sprays in non-confined areas during spraying, sanding, and grinding operations.
		PN 6100 (Small)	4240-01-342-2852	BX (24 EA)	
		PN 6200 (Medium)	4240-01-342-2853	BX (24 EA)	
		PN 6300 (Large)	4240-01-342-2854	BX (24 EA)	
74	Filter Cartridges (Organic Vapor / P100 Type)	3M Co. (CAGE Code # 50378)			For use with 3M Co. half and full face-piece (6000 & 7000 Series) respirators.
		PN 60921	4240-01-455-7353	BX (60 EA)	
75	Respirator Lens Assembly for 3M Co. Full Facepiece Respirators (With Plastic Film Covers)	3M Co. (CAGE Code # 50378)			
		PN 7884	4240-01-247-8929	BX (5 EA)	Replacement lens for 7800S Series respirators.
		PN 6898	Open Purchase	BX (5 EA)	Replacement lens for 6000 Series respirators.

Table B-2. Equipment For Cleaning and Corrosion Prevention and Control - Continued

Item No.	Nomenclature	Specifications/Part Number	National Stock Number	Unit Issue	Intended Use
76	Lens Covers for 3M Co. Full Facepiece Respirators (Peel-Away Plastic Film)	3M Co. (CAGE Code # 50378)			
		PN 7899-25	4240-01-248-4634	BX (25 EA)	Lens covers for 7800S Series respirators.
		PN 7899-100	4240-01-248-6435	BX (100 EA)	Lens covers for 7800S Series respirators.
		PN 6885	4240-01-455-2787	BX (100 EA)	Lens covers for 6800 Series respirators.
77	Inhalation Valve for 3M Co. Full Face-piece Respirators	3M Co. (CAGE Code # 50378)			
		PN 7282	4240-01-248-2607	BX (200 EA)	Replacement valves for 7800S Series respirators.
		PN 6893	4240-01-455-2811	BX (200 EA)	Replacement valves for 6800 Series respirators.
78	Exhalation Valve for 3M Co. Full Face-piece Respirators	3M Co. (CAGE Code # 50378)			
		PN 7283	4240-01-248-2608	BX (50 EA)	Replacement valves for 7800S Series respirators.
		PN 6889	4240-01-455-2809	BX (10 EA)	Replacement valves or 6800 Series respirators.
79	Tyvek™ Shroud for 3M Co. Full Face-piece Respirators	3M Co. (CAGE Code # 50378)			Used with full facepiece respirators to protect the head and neck from painting and/or abrasive blasting overspray.
		PN 7915-5	4240-01-320-1957	PG (5 EA)	
80	Spectacle Kit for 3M Co. Full Facepiece Respirators	3M Co. (CAGE Code # 50378)			Consists of frame and retainer clip.
		PN 6878	4240-01-455-2346	EA	For use on 6000 Series full facepiece respirators.
		PN 7925	4240-01-395-4128	EA	For use with prescription lenses with 7800S Series full facepiece respirators.
81	Respirator Cleaning Wipes (alcohol-free towelettes)	3M Co. (CAGE Code #'s 50378 & OT1L6)			Hygienic cleaning of respirators and other personal protective gear/equipment.
		PN 504	4240-01-372-3078	BX (100 EA)	
			6510-01-397-4339	BX (500 EA)	

WARNING

Do not use shop air for breathing or as inlet air for these breathable air pumps. It contains oil, particulates, and harmful gases. Read and follow equipment instructions to determine the maximum number of air lines to be used with a single pump.

Table B-2. Equipment For Cleaning and Corrosion Prevention and Control - Continued

Item No.	Nomenclature	Specifications/Part Number	National Stock Number	Unit Issue	Intended Use
82	Pump/Compressor, Breathable Air, Pneumatic (Air Motor) Driven, Portable	Rhine Air, Inc. (CAGE Code # 58501)			Used to supply breathable air to hoods and full facepiece respirators for abrasive blasting and other corrosion removal operations as required and painting operations. These small, air driven, portable compressors are very convenient as they may be easily transported and set up almost anywhere to supply breathable air.
		PN NF-1100 supercedes PN NF15-3	4240-01-363-4699	EA	
		Bullard Co. (CAGE Code # 09729			
		PN ADP-16 / ADP-20	4310-01-168-7302	EA	
	NOTE				
	Use MIL-PRF-32033 oil (NSN 9150-00-231-6689/1 QT CN) or MIL-H-17672 hydraulic fluid/10 wt. oil equivalent (NSN 9150-00-985-7231/1 QT CN) to fill in-line oiler of air motor after each use, as required, to maintain lubrication and prevent motor oxidation.				
83	Replacement Filter Cartridges for Breathable Air Pumps	Rhine Air, Inc. (CAGE Code # 58501			Replacement filters for use with Rhine Air's NF-1100 and NF15-3 pumps.
		PN CF8080	4240-01-084-0921	BX (10 EA)	
84	Compressed Air Inlet Hose Assembly, ½ in I D Hose w/ in I D Orifice Fittings	Rhine Air, Inc. (CAGE Code # 58501			Used only for supplying fresh, breathable air to the air motor on the breathable air pump unit.
		PN ED1313B-50 (50 ft ' L)	4240-01-251-8159	EA	
		PN ED1313B-100 (100 ft L)	4240-01-251-8160	EA	These inlet hose assemblies can be used with both Rhine Air and Bullard units.
85	Quick Disconnect Fittings for Inlet Hose	CAGE Code # 73992			
		3L25 (Male Plug)	4730-01-442-1809	EA	Replacement fittings for the Rhine Air PN ED1313B inlet air hose assemblies.
		3R25 (Female Coupler)	4730-01-442-1808	EA	
86	Outlet Manifold, Quick Disconnect (Female Coupler Assembly)	Rhine Air, Inc. (CAGE Code # 58501)			Connects respirator air hose assemblies to the breathable air pump. Can be used with both Rhine Air and Bullard units.
		PN ED-06-430	Open Purchase	EA	
87	Gloves, Men's & Women's (Work Cotton Flannel; Natural in Color)	A-A-1665			General purpose protective work gloves for hand protection during various maintenance operations.
		Style 1 (Knit Cuff/Reg.)	8415-00-268-8330	PR	
		Style 2 (Gauntlet/Reg)	8415-00-634-5027	PR	
		Style 3 (Reversible Palm/Knit Cuff/Large)	8415-00-559-5613	PR	

Table B-2. Equipment For Cleaning and Corrosion Prevention and Control - Continued

Item No.	Nomenclature	Specifications/Part Number	National Stock Number	Unit Issue	Intended Use
88	Gloves, Cloth, Vinyl Dipped (Black in Color)	A-A-50370 (supersedes MIL-G-82253)			General purpose light duty type chemical and oil protective gloves used for hand protection during cleaning and chemical, solvent, and oil/preservative applications. Rubberized for better grip.
		Type 1 (Gauntlet/Med.)	8415-00-916-2817	PR	
		Type 1 (Gauntlet/Large)	8415-00-916-2818	PR	
		Type 2 (Knit Wrist/Universal one-size fits all)	8415-00-935-2833	PR	
89	Gloves, Toxicological Agents, Protective (Black in Color)	MIL-G-12223 Type II (14 in Gauntlet)			Heavy duty industrial grade synthetic rubber gloves used for hand protection while handling solvents, chemical paint removers, paints, sealants, or other materials which may be injurious to the skin. **NOTE** These gloves are not designed for protection in electrical applications or chemical warfare activities.
		X-Small (8)	8415-00-753-6550	PR	
		Small (9)	8415-00-753-6551	PR	
		Medium (10)	8415-00-753-6552	PR	
		Large (11)	8415-00-753-6553	PR	
		X-Large (12)	8415-00-753-6554	PR	
90	Gloves, Chemical and Oil Protective (Green in Color)	MIL-G-87066 (Gauntlet Cuff; Flock Lining)			Synthetic rubber gloves with a high degree of abrasion resistance and resistance to chemicals such as water, gasoline, oils, alkalis, and acids. They are used to protect the hands during aircraft, missile and equipment washing operations.
		XX-Small (7)	8415-01-147-6263	PR	
		X-Small (8)	8415-01-147-9540	PR	
		Small (9)	8415-01-012-9294	PR	
		Medium (10)	8415-01-013-7382	PR	
		Large (11)	8415-01-013-7384	PR	
91	Gloves, Disposable, Nitrile Rubber, Pre-Powder-ed, Ambi-dextrous (Light Blue in Color)	CAGE Code #'s 62538 &4X954			General purpose protective wear for the hands during various cleaning and corrosion treatment operations. These gloves are heavier duty and have better resistance to some chemicals than the latex rubber gloves (Item #92).
		PN 7005S (Small)	8415-01-352-6556	PG (20 BX/ 100 EA)	
		PN 7005M (Medium)	8415-01-352-6553	PG (20 BX/ 100 EA)	
		PN 7005L (Large)	8415-01-352-6554	PG (20 BX/ 100 EA)	
		PN 7005XL (X-Large)	8415-01-352-6555	PG (20 BX/ 100 EA)	

Table B-2. Equipment For Cleaning and Corrosion Prevention and Control - Continued

Item No.	Nomenclature	Specifications/Part Number	National Stock Number	Unit Issue	Intended Use
92	Gloves, Disposable, Latex Rubber, Pre-Powdered, Ambidextrous (Natural in Color)	A-A-53513			General purpose protective wear for the hands during various cleaning and corrosion treatment operations. These gloves are lighter duty and have somewhat less resistance to some chemicals than the nitrile rubber gloves (Item #91).
		Small	6515-01-365-6183	PG (100 EA)	
		Medium	6515-01-364-8553	PG (100 EA)	
		Large	6515-01-364-8554	PG (100 EA)	
93	Coveralls, Cotton, Hook-Pile Fastener Tape (Green in Color)	MIL-C-2202 Type I (Olive Green)			Protective clothing for corrosion maintenance and inspection personnel. Designed primarily for wear over regular/street clothing.
		Small (42)	8405-00-131-6507	EA	
		Medium (46)	8405-00-131-6508	EA	
		Large (50)	8405-00-131-6509	EA	
		X-Large (54)	8405-00-131-6510	EA	
		XX-Large (58)	8405-00-131-6511	EA	
94	Coveralls, Disposable, General Purpose (White in Color)	A-A-50358			Protective clothing for corrosion maintenance personnel to protect against dirt, grease, paint, and low-hazard contaminants. They are one-piece, front opening (slide type closure) coveralls made of fire resistant and water repellent materials, and they are intended to be thrown away when dirty.
		X-Small	8415-00-601-0792	EA	
		Small	8415-00-601-0793	EA	
		Medium	8415-00-601-0794	EA	
		Large	8415-00-601-0797	EA	
		X-Large	8415-00-601-0801	EA	
		XX-Large	8415-00-601-0802	EA	
95	Coveralls, Disposable (White in Color)	A-A-55196 (supersedes MIL-C-87069)			Protective olefin coveralls with an attached hood having a draw string closure and attached booties for maintenance personnel performing work around asbestos materials or with fiberglass and other composite materials. They are intended to be thrown away after use.
		Type I (With Hood)			
		Small/Medium	8415-01-445-6565	EA	
		Large/X-Large	8415-01-445-6568	EA	
		XX-Large	8415-01-445-6588	EA	
96	Trousers, Wet Weather (Green in Color)	MIL-T-87099 (supersedes MIL-O-22776)			Waterproof cloroprene rubber coated nylon twill trousers for use in conjunction with a wet weather parka (Item # 97) for aircraft, missile, and equipment maintenance operations for personnel protecttion in wet or wet/cold conditions.
		XX-Small	8405-01-276-1532	PR	
		X-Small	8405-01-276-1533	PR	
		Small	8405-01-276-1534	PR	
		Medium	8405-01-276-1535	PR	
		Large	8405-01-276-1536	PR	
		X-Large	8405-01-276-1537	PR	

Table B-2. Equipment For Cleaning and Corrosion Prevention and Control - Continued

Item No.	Nomenclature	Specifications/Part Number	National Stock Number	Unit Issue	Intended Use
97	Parka, Wet Weather (Green in Color)	MIL-P-87098 (supersedes MIL-P-82277)			Waterproof cloroprene rubber coated nylon twill parka for use in conjunction with wet weather trousers (Item # 96) for aircraft, missile, and equipment maintenance operations for personnel protection in wet or wet/cold conditions.
		XX-Small	8405-01-276-4187	EA	
		X-Small	8405-01-276-4188	EA	
		Small	8405-01-276-4189	EA	
		Medium	8405-01-276-4190	EA	
		Large	8405-01-276-4191	EA	
		X-Large	8405-01-276-4192	EA	
98	Parka and Trousers, Wet Weather (Woodland Camouflage Pattern)	MIL-P-43907 Class 2 (Wdld Cam Pat)			Waterproof polyurethane coated nylon twill parka (with hood) and trousers for use over outer garments (hot or cold weather) during aircraft, missile, and equipment maintenance operations for personnel protection in wet or wet/cold conditions when camouflage pattern clothing is required.
		Parka			
		XX-Small	8405-01-053-9202	EA	
		X-Small	8405-00-001-1547	EA	
		Small	8405-00-001-1548	EA	
		Medium	8405-00-001-1549	EA	
		Large	8405-00-001-1550	EA	
		X-Large	8405-00-001-1551	EA	
		Trousers			
		XX-Small	8405-01-053-9400	PR	
		X-Small	8405-00-001-8025	PR	
		Small	8405-00-001-8026	PR	
		Medium	8405-00-001-8027	PR	
		Large	8405-00-001-8028	PR	
		X-Large	8405-00-001-8029	PR	
99	Jacket, Extreme Cold Weather, Impermeable (Green in Color)	MIL-J-82299			Protective outerwear for aircraft, missile, and equipment maintenance operations at temperatures below +14° F (-10° C). Used in conjunction with extreme cold weather trousers (Item # 100) and a hood.
		Small	8415-00-349-9313	EA	
		X-Large	8415-00-349-9316	EA	

Table B-2. Equipment For Cleaning and Corrosion Prevention and Control - Continued

Item No.	Nomenclature	Specifications/Part Number	National Stock Number	Unit Issue	Intended Use
100	Trousers, Extreme Cold Weather, Impermeable (Green in Color)	MIL-T-21705			Protective outerwear for aircraft, missile, and equipment maintenance operations at temperatures below +14° F (-10° C). Used in conjunction with an extreme cold weather jacket (Item # 99) and a hood.
		Small (Size 27 to 30)	8415-00-575-1225	EA	
		X-Large (Size 39 to 42)	8415-00-575-1246	EA	
		XX-Large (Size 43 to 46)	8415-00-575-1247	EA	
101	Pads, Knee, Industrial	PN 31861 (CAGE Code # 55799)	4240-00-595-3861	PR	Knee protection during maintenance operations. Made of hard rubber with a sponge rubber liner and attached with two adjustable web straps with retaining buckles.
		PN 5402T13 (CAGE Code # 39428)	Same		
		PN 71H1718 (CAGE Code # 53800)	Same		

Table B-2. Equipment For Cleaning and Corrosion Prevention and Control - Continued

Item No.	Nomenclature	Specifications/Part Number	National Stock Number	Unit Issue	Intended Use
102	Firemen's Boots, (Black in Color)	A-A-50371			Protective outer footwear for aircraft maintenance operations such as aircraft, missile, and equipment washing.
		Type II (Knee Length-13½ in High)			
		Size 5	8430-00-753-5935	PR	
		Size 6	8430-00-753-5936	PR	
		Size 7	8430-00-753-5937	PR	
		Size 8	8430-00-753-5938	PR	
		Size 9	8430-00-753-5939	PR	
		Size 10	8430-00-753-5940	PR	
		Size 11	8430-00-753-5941	PR	
		Size 12	8430-00-753-5942	PR	
		Size 13	8430-00-753-5943	PR	
		Size 14	8430-00-753-5944	PR	
		Size 15	8430-00-753-5945	PR	
		Type I (¾ Length-29 in High)			
		Size 5	8430-00-753-6105	PR	
		Size 6	8430-00-147-1032	PR	
		Size 7	8430-00-147-1033	PR	
		Size 8	8430-00-147-1034	PR	
		Size 9	8430-00-147-1035	PR	
		Size 10	8430-00-147-1036	PR	
		Size 11	8430-00-299-0342	PR	
		Size 12	8430-00-147-1038	PR	
		Size 13	8430-00-082-5490	PR	
		Size 14	8430-00-082-5491	PR	
		Size 15	8430-00-082-5492	PR	
103	Footwear Covers, Aircraft Washdown (Charcoal Gray in Color)	PN M (CAGE Code # 29223)			Water repellant covers worn over boots to increase traction and prevent making boot marks on aircraft surfaces when walking on them during maintenance and washing operations.
		Medium	8430-00-911-2458	PR	
		Large	8430-00-911-2459	PR	
		X-Large	8430-00-911-3771	PR	

Table B-2. Equipment For Cleaning and Corrosion Prevention and Control - Continued

Item No.	Nomenclature	Specifications/Part Number	National Stock Number	Unit Issue	Intended Use
104	Footwear Cover, Chemical Protective (Overboots Black in Color)	MIL-F-43987			Overboots for footwear (shoes and boots) used to protect them from chemical attack during maintenance operations which require use of chemicals. They are acid, fuel, oil, and fire resistant. The small size is for use over sizes 3 to 7½ combat boots, and the large size is for use over sizes 8 to 14 combat boots.
		Small	8430-01-118-8712	PR	
		Large	8430-01-021-5978	PR	
105	Overshoes, Men's Rubber, 5 Buckle Type (Black in Color)	A-A-50362 (supersedes MIL-O-836)			Medium weight overshoes to protect regular footwear from water and other liquids during maintenance operations or outside activities during inclement weather conditions.
		Size 5	8430-00-144-1672	PR	
		Size 6	8430-00-144-1673	PR	
		Size 7	8430-00-144-1674	PR	
		Size 8	8430-00-144-1643	PR	
		Size 9	8430-00-144-1644	PR	
		Size 10	8430-00-144-1645	PR	
		Size 11	8430-00-144-1646	PR	
		Size 12	8430-00-144-1647	PR	
		Size 13	8430-00-144-1648	PR	
		Size 14	8430-00-144-1649	PR	
		Size 15	8430-00-144-1682	PR	
106	Apron, Utility (Laboratory Black in Color)	A-A-3104 (supersedes ZZ-A-605) (45 in L x 35 in W)	8415-00-634-5023	EA	A full length chloroprene rubber (acid resistant) protective apron used to protect corrosion maintenance personnel and their clothing against chemical splashes when handling chemicals.
107	Face Shield, Industrial, (Adjustable Strap, Clear lens)	ANSI Z87.1 (supersedes L-F-36) (9 in L x 18 in W Plastic Window/ Lens)	4240-00-542-2048	EA	Used to provide eye and face protection when cutting, grinding, or chipping metal or when handling hazardous chemicals.

NOTE

Face shield is not for primary protection and should always be used with goggles.

108	Goggles, Industrial, Plastic Standard Safety Goggles	ANSI Z87.1 (supersedes A-A-1110)			

Table B-2. Equipment For Cleaning and Corrosion Prevention and Control - Continued

Item No.	Nomenclature	Specifications/Part Number	National Stock Number	Unit Issue	Intended Use
	(adjustable headband, single clear polycarbonate plastic lens, vented clear plastic frame)		4240-00-052-3776	PR	To provide eye protection from flying particles in industrial environments. Can be worn over eyeglasses. Goggles are ventilated to reduce fogging.
	Splash-Proof Goggles (adjustable headband, single green polycarbonate plastic lens, light-green plastic frame with indirect venting)		4240-01-082-8928	PR	To protect eyes from chemical splashes, impacts, and sparks. Can be worn over eyeglasses. Ventilated for comfort and to provide airflow to minimize lens fogging.
109	Goggles, Chemical Splash Proof Type (adjustable headband, double clear glass lens, unvented clear plastic frame with rubber face pads)	ANSI Z87.1	Commercial Items		Commonly known as "Nod and Shake" goggles, they are particularly useful for eye protection during aircraft, missile, and equipment washing operations. They also provide excellent eye protection during chemical corrosion removal and metal surface treatment operations.
		PN A883F (CAGE Code # 6M644)	Open Purchase	PR	
		PN 551 (CAGE Code # 16029)	Open Purchase	PR	
110	Plug, Ear Disposable, (Yellow in Color)	PN 4-375 (CAGE Code #'s 89875 & U3216)	6515-00-137-6345	BX (400 EA) (200 EA wrapped pairs)	Compressible vinyl foam material that expands to fit the ear canal and provide a moderate degree of hearing protection in high noise industrial environments.
111	Protector, Hearing (Head-phone circuaural/earmuff style, comes with extra set of seals)	A-A-58084	4240-00-022-2946	EA	Fits securely over the ears to provide a high degree of hearing protection to help prevent hearing loss or damage in loud work areas.
112	Aural Protector, Sound	SAE AS 23899 (supersedes MIL-A-23389)			Fits securely over the ears to provide a high degree of hearing protection to help prevent hearing loss or damage in loud work areas.
		Ear muff assembly	4240-00-759-3290	EA	
		Replacement Seals	4240-00-979-4040	PR	
		Sealant Application Equipment (Tools)			
113	Sealant Dispensing Gun with 2.5 Oz Metal Retainer (Manual Type)	CAGE Code # 92108			Application of sealants and adhesives.
		PN 221824 (Semco® Model # 850-2.5M)	5120-01-135-8344	EA	

Table B-2. Equipment For Cleaning and Corrosion Prevention and Control - Continued

Item No.	Nomenclature	Specifications/Part Number	National Stock Number	Unit Issue	Intended Use
114	Sealant Dispensing Gun with 6 Oz Metal Retainer (Manual Type)	CAGE Code # 92108			Application of sealants and adhesives.
		PN 221830 (Semco® Model # 850-6M)	5120-00-952-3507	EA	
115	Sealant Dispensing Gun with 12 Oz Metal Retainer (Manual Type)	CAGE Code # 92108			Application of sealants and adhesives.
		PN 221836 (Semco® Model # 850-12M)	5120-01-373-3805	EA	
116	Sealant Dispensing Gun with 2.5 Oz Metal Retainer (Pneumatic Type)	CAGE Code # 92108			Application of sealants and adhesives. Gun handle is removable to allow for easier access in confined areas. Refer to Figure 6-1.
		PN 250255 (Semco® Model # 250A-2½)	5130-00-323-2287	EA	
117	Sealant Dispensing Gun with 6 Oz Metal Retainer (Pneumatic Type)	CAGE Code # 92108			Application of sealants and adhesives. Gun handle is removable to allow for easier access in confined areas. Refer to Figure 6-1.
		PN 250065 (Semco® Model # 250A-6)	5130-00-924-6396	EA	
118	Sealant Dispensing Gun with 12 Oz Metal Retainer (Pneumatic Type)	CAGE Code # 92108			Application of sealants and adhesives. Gun handle is removable to allow for easier access in confined areas. Refer to Figure 6-1.
		PN 250125 (Semco® Model # 250A-12)	Open Purchase	EA	
119	Repair Kit for Sealant Dispensing Gun (Pneumatic Type)	CAGE Code # 92108			Valve repair kit for Semco® Model # 250-A sealant dispensing guns.
		PN 240020	Open Purchase	KT	
120	Replacement Cartridge Retainers for Semco® Model # 850 Manual Sealant Dispensing Guns	CAGE Code # 92108 Semco® Model # 850 Retainers			
		PN 226819	5120-01-247-1639	EA	Replacement metal retainer; 2.5 Oz guns.
		PN 226820	5340-01-384-6120	EA	Replacement metal retainer; 6 Oz guns.
		PN 226822	Open Purchase	EA	Replacement metal retainer; 12 Oz guns.
121	Replacement Cartridge Retainers for Semco® Model # 250A Pneumatic Sealant Dispensing Guns	CAGE Code # 92108 Semco® Model # 250A Retainers			

Table B-2. Equipment For Cleaning and Corrosion Prevention and Control - Continued

Item No.	Nomenclature	Specifications/Part Number	National Stock Number	Unit Issue	Intended Use
		PN 220256	5120-00-693-8069	EA	Replacement metal retainer; 2.5 Oz guns.
		PN 220928	5120-00-693-8070	EA	Replacement metal retainer; 6 Oz guns.
		PN 220923	5120-00-693-8071	EA	Replacement metal retainer; 12 Oz guns.
122	Hose Assemblies for Semco® Model # 250A Pneumatic Sealant Dispensing Guns	CAGE Code # 92108			Replacement hose assemblies and fittings for Semco® Model # 250-A pneumatic sealant dispensing guns. All hose assemblies come with a B-nut fitting and a quick disconnect attachment
		Hose Assembly with Hansen Connector Assy.			
		(5 ft L) PN 280000	Open Purchase	EA	
		(10 ft L) PN 280001	4720-00-956-5313	EA	
		(15 ft L) PN 280002	Open Purchase	EA	
		(20 ft L) PN 280003	4720-01-329-8602	EA	
		(25 ft L) PN 280004	4720-00-080-5159	EA	
		(30 ft L) PN 280005	Open Purchase	EA	
		Hanson Connector Assy.			
		PN 229186	Open Purchase	EA	
		B-Nut Assy. (Gun End)			
		PN 229189	4730-01-267-5307	EA	
123	Wrench for Semco® Model # 250-A Pneumatic Sealant Dispensing Guns	CAGE Code # 92108			Service wrench for adjusting Semco® Model # 250-A pneumatic sealant dispensing guns.
		PN 240018	5120-00-996-1565	EA	

Table B-2. Equipment For Cleaning and Corrosion Prevention and Control - Continued

Item No.	Nomenclature	Specifications/Part Number	National Stock Number	Unit Issue	Intended Use
124	Semco® Disposable Plastic Cartridges, Plungers, Seals, and Caps for Manual and Pneumatic Sealant Dispensing Guns	CAGE Code # 92108			
		Cartridges (HD Polyethylene)			Empty cartridges for filling with and dispensing of two-part sealants using the Semco® Model #'s 250-A and 850 sealant dispensing guns.
		PN 220316 (2.5 Oz)	5120-00-694-9082	EA	
		PN 220317 (6 Oz)	5120-00-673-1886	EA	
		PN 220318 (12 Oz)	5120-01-454-4210	EA	
		Wiper Plungers (LD Polyethylene)			Used to assure complete dispensing of sealants and elimination of waste and/or leakage from the back end of the cartridge. Fits either 2.5 Oz, 6 Oz , or 12 Oz cartridges.
		PN 220259 WP (Wiper Plunger)	5120-00-276-9422	EA	
		Threaded Cap			Used to screw into and cap the neck or front end of the cartridge to prevent leakage. Fits either 2.5 Oz, 6 Oz , or 12 Oz cartridges.
		PN 234411 TC-Seal Cap	5365-01-107-7863	EA	
		Flange Cap			Used to snap onto the back end of the cartridge to prevent contamination of the sealant. Fits either 2.5 Oz, 6 Oz , or 12 Oz cartridges.
		PN 220238 F- Flange (Snap On) Cap	8125-00-410-8501	EA	
125	Mechanical Beam Analytical Balance (Ohaus Dial-O-Gram Balance)	CAGE Code # 85973 (Ohaus Corp.)			Use for weighing out the proper ratio of base and accelerator compounds to prepare and mix two component sealants.
		PN 1650	6670-00-957-3781	EA	

Table B-2. Equipment For Cleaning and Corrosion Prevention and Control - Continued

Item No.	Nomenclature	Specifications/Part Number	National Stock Number	Unit Issue	Intended Use
126	Semco® Sealant Smoothing Tools (Fiberglass Reinforced Plastic)	CAGE Code # 92108			Spatulas and spreaders for tooling and smoothing sealants and adhesives. For additional information refer to Figure 6-5.
		Sealant Spatulas			
		PN 231349	5120-01-337-9415	EA	9½ in L; rounded ends - 9/16 in D & ¼ in D
		PN 226241	5120-01-297-7015	EA	7¼ in L; sq end-3/16 in W & rd. end- in D
		PN 226242	5120-01-297-7016	EA	7¼ in L; sq end-9/32 in W & rd. end in D
		PN 226243	5120-01-297-7017	EA	7¼ in L; sq ends - in W & 15/32 in W
		Spatula Kit			The kit includes spatulas PN's 226241, 226242, and 226243 spatulas.
		PN 226244	5120-00-056-3237	KT	
		Sealant Scraper			Used for either spreading or removal of sealant from all surfaces (5 13/16 in L; one sq end- ¾ in W).
		PN 234350	5120-01-298-6121	EA	
		Sealant Spreader			Used for spreading sealants or adhesives onto flat surfaces, in particular on a large area (4 in L x 2 13/16 in W).
		PN 229394	5120-01-337-9416	EA	
		Comb Spreader			Used to spread sealants or adhesives while maintaining a uniform thickness and a grooved pattern (3 in L x 3 in W with saw tooth edges).
		PN 229395	Open Purchase	EA	
127	Plastic Nozzles, Disposable (¼ in or ½ in NPT male threaded end)	CAGE Code # 92108 (Semco® Model #'s)			Nozzles used for dispensing sealants when attached to Semco® cartridges (Item # 124). Refer to Figure 6-2 for nozzle shapes to determine the appropriate Model # for the job.
		Standard Nozzles			Applying sealant in butt seam gaps.
		No. 252 (PN 220538)	5120-00-167-0150	EA	St 2½ in L with 1/16 in orifice.
		No. 254 (PN 220540)	5120-00-673-1885	EA	St 2½ in L with in orifice.
		No. 255 (PN 233495)	Open Purchase	EA	St 2½ in L with no orifice (cut to suit).
		No. 410 (PN 220542)	5120-00-801-0949	EA	St 4 in L with 1/32 in orifice.
		No. 410 (PN 220543)	5120-00-055-4063	EA	45° angle with 1/32 in orifice.
		No. 415 (PN 227613)	5120-01-386-4480	EA	St 4 in L with no orifice (cut to suit).
		No. 420 (PN 220544)	5120-00-042-6577	EA	St 4 in L with 1/16 in orifice.
		No. 430 (PN 220548)	5120-00-967-8151	EA	St 4 in L with 3/32 in orifice.
		No. 430 (PN 220549)	5120-00-055-4062	EA	45° angle with 3/32 in orifice.
		No. 440 (PN 220550)	5120-00-773-3791	EA	St 4 in L with in orifice.
		No. 620 (PN 220553)	5120-00-167-0152	EA	St 6 in L with 1/16 in orifice.
		No. 620 (PN 220554)	5120-00-966-5373	EA	45° angle with 1/16 in orifice.

Table B-2. Equipment For Cleaning and Corrosion Prevention and Control - Continued

Item No.	Nomenclature	Specifications/Part Number	National Stock Number	Unit Issue	Intended Use
127 Cont.		No. 640 (PN 220555)	5120-00-822-7194	EA	St 6 in L with in orifice.
		No. 640 (PN 220556)	5120-00-167-0153	EA	30° angle with in orifice.
		No. 640 (PN 220551)	5120-00-670-1186	EA	45° angle with in orifice.
		No. 650 (PN 224494)	Open Purchase	EA	St 6 in L with in orifice.
		No. 820 (PN 220557)	5120-00-966-8270	EA	St 8 in L with 1/16 in orifice.
		No. 820 (PN 220558)	5120-00-966-5371	EA	45° angle with 1/16 in orifice.
		No. 840 (PN 220559)	5120-00-966-5372	EA	St 8 in L with in orifice.
		No. 840 (PN 220560)	5120-00-966-5382	EA	45° angle with in orifice.
		No. 8690 (PN 220606)	5120-00-966-8243	EA	9 in vent duck nozzle with 3/32 in orifice.
		No. 1002 (PN 220561)	5120-00-055-4055	EA	St 10 in L with 1/16 in orifice.
		No. 1004 (PN 220563)	5120-00-055-4054	EA	St 10 in L with in orifice.
		No. 1010 (PN 220565)	5120-00-055-4058	EA	St 10 in L with 5/16 in orifice.
		Fillet Nozzles			Applying sealant fillets over lap joints.
		No. 425 (PN 232499)	5120-01-386-4274	EA	St 4 in L with in x in orifice.
		No. 426 (PN 232500)	Open Purchase	EA	St 4 in L with in x in orifice.
		No. 427 (PN 232501)	Open Purchase	EA	St 4 in L with in x in orifice.
		No. 428 (PN 232502)	Open Purchase	EA	St 4 in L with in x in orifice.
		No. 429 (PN 232590)	Open Purchase	EA	St 4 in L with 1/16 in x ½ in orifice.
127 Cont.		Ribbon Nozzles			Applying sealant for fay surface sealing.
		No. 8607 (PN 220568)	5120-00-966-5381	EA	St $5^7/_8$ in L with 1/16 in x ¼ in orifice.
		No. 8608 (PN 220569)	5120-00-966-8244	EA	St 4 in L with 11/64 in orifice (flared tip)
		No. 8610 (PN 220570)	5120-00-299-6790	EA	St 4 in L with 3/64 in x 9/64 in orifice.
		No. 8613 (PN 220572)	5120-00-966-5379	EA	St 5 in L with 3/64 in x in orifice.
		No. 8615 (PN 220574)	5120-00-966-5378	EA	St 4 in L with 1/16 in x ½ in orifice.
		No. 8616 (PN 220577)	5120-01-385-5074	EA	2 3/16 in L with 7/32 in orifice (for windshield fillets).
		No. 8630 (PN 220589)	5120-00-966-5377	EA	St 4 in L with in x 1¾ in orifice.
		No. 8630-9 (PN 220582)	5120-00-966-5376	EA	St $4^7/_8$ in L with in x 1¾ in orifice & an attached brush spreader.
		No. 8642 (PN 220585)	5120-00-293-4676	EA	St 4 in L with 3/16 in orifice.
		No. 8643 (PN 220586)	5120-00-775-1670	EA	St 4 in L with in x ¾ in orifice & spatula like extension spreader.

Table B-2. Equipment For Cleaning and Corrosion Prevention and Control - Continued

Item No.	Nomenclature	Specifications/Part Number	National Stock Number	Unit Issue	Intended Use
		No. 8645 (PN 220587)	5120-00-138-1658	EA	St 4 3/16 in L with in x1 in orifice & spatula like extension spreader.
		No. 8646 (PN 220588)	5120-00-966-5374	EA	St 3 15/16 in L with in x ¾ in orifice & saw-tooth trowel extension spreader.
127 Cont.		No. 8648 (PN 220589)	5120-00-966-5375	EA	St 5 3/16 in L with in x ¾ in orifice & spatula like extension spreader.
		Extension Nozzle			
		No. 600E (PN 220552)	5120-00-670-1187	EA	6 in L round extension tube.
		Floorboard Nozzle			Applying sealant on floor board faying surfaces
		PN 231674	Open Purchase	EA	St 1 in L with ½ in D ctr. button surrounded with 12 EA 1/32 in orifices
		Funnel Nozzle			Filling large cavities with sealant.
		1 in (PN 231718)	Open Purchase	EA	St 1 in L with ½ in funnel type orifice.
		2 in (PN 231348)	Open Purchase	EA	St 3 in L with 1 27/32 in funnel type orifice.
		Nozzle Adapter			
		PN 229306	Open Purchase	EA	¼ in NPT male thread & ½ in NPT female thread to receive ½ in NPT thread nozzle.
		Edge Fill Nozzle			
		No. 444 (PN 234164)	Open Purchase	EA	A 0.40 in thick flange guides it along a panel edge/corner to provide a slightly rounded edge/corner fill.

Table B-2. Equipment For Cleaning and Corrosion Prevention and Control - Continued

Item No.	Nomenclature	Specifications/Part Number	National Stock Number	Unit Issue	Intended Use
128	Fastener Sealing Nozzles (Countersink Nozzles)	CAGE Code # 92108			Used to apply the required amount of sealant in the countersink area of fastener holes prior to installation of the fasteners. They have threaded ends to fit into the Semco® plastic cartridges (Item # 124). The nozzles are color coded for identification. Refer to Figure 6-3determine the appropriate nozzle configuration and size for the job as well as operation instructions.
		PN 233244 Size: 3/32 in- in (Red)	Open Purchase	EA	
		PN 233243 Size: 3/16 in-¼ in (White)	Open Purchase	EA	
		PN 233451 Size: 5/16 in- in (Blue)	Open Purchase	EA	
		PN 231319 Size: ¼ in hole (Yellow)	Open Purchase	EA	
		PN 231320 Size: 5/16 in hole (Grey)	Open Purchase	EA	
		PN 231321 Size: in hole (Green)	Open Purchase	EA	
		PN 231560 Size: 7/16 in hole (Red)	Open Purchase	EA	
		PN 231559 Size: ½ in hole (Blue)	Open Purchase	EA	

Table B-2. Equipment For Cleaning and Corrosion Prevention and Control - Continued

Item No.	Nomenclature	Specifications/Part Number	National Stock Number	Unit Issue	Intended Use
129	Rivet Nozzles	CAGE Code # 92108			Used to apply the required amount of sealant in the counter sink and hole prior to fastening parts with rivets. The spring-loaded tip of the nozzle acts as a check valve allowing precise shots of material to be dispensed. They have threaded ends to fit into the Semco® plastic cartridges. The nozzles are color coded for identification. Refer to Figure 6-4 to determine the appropriate nozzle configuration and size for the job as well as operation instructions.
		PN 234285	Open Purchase	EA	
		Size: 3/32 in (Germaine Green)			
		PN 226837	5130-01-413-8733	EA	
		Size: in (Blue)			
		PN 226838	Open Purchase	EA	
		Size: 5/32 in (Black)			
		PN 226839	Open Purchase	EA	
		Size: 3/16 in (White)			
		PN 234260	Open Purchase	EA	
		Size: 3/16 in for 120° counter-sink (Green)			
		PN 234284	Open Purchase	EA	
		Size: 7/32 in (Light Blue)			
		PN 226840	5120-01-416-1683	EA	
		Size: ¼ in (Red)			
		PN 233051	Open Purchase	EA	
		Size: 5/16 in (Orange)			
		PN: 233052	Open Purchase	EA	
		Size: in (Yellow)			
130	Roller Nozzles (¼ in NPT male threaded end)	CAGE Code # 92108			Used to apply adhesives and sealants evenly over wide areas of substrate (e.g. faying surface). They have threaded ends to fit into the Semco® plastic cartridges. They can be solvent cleaned for re-use.
		Roller Nozzle Assembly			
130 Cont.		PN 232693	Open Purchase	EA	
		(1 in W Roller)			
		PN 232692	Open Purchase	EA	
		(2 in W Roller)			
		Replacement Roller			
		PN 232701	5120-01-440-6984	EA	
		(1 in W Roller)			
		PN 232702	Open Purchase	EA	

Table B-2. Equipment For Cleaning and Corrosion Prevention and Control - Continued

Item No.	Nomenclature	Specifications/Part Number	National Stock Number	Unit Issue	Intended Use
		(2 in W Roller)			

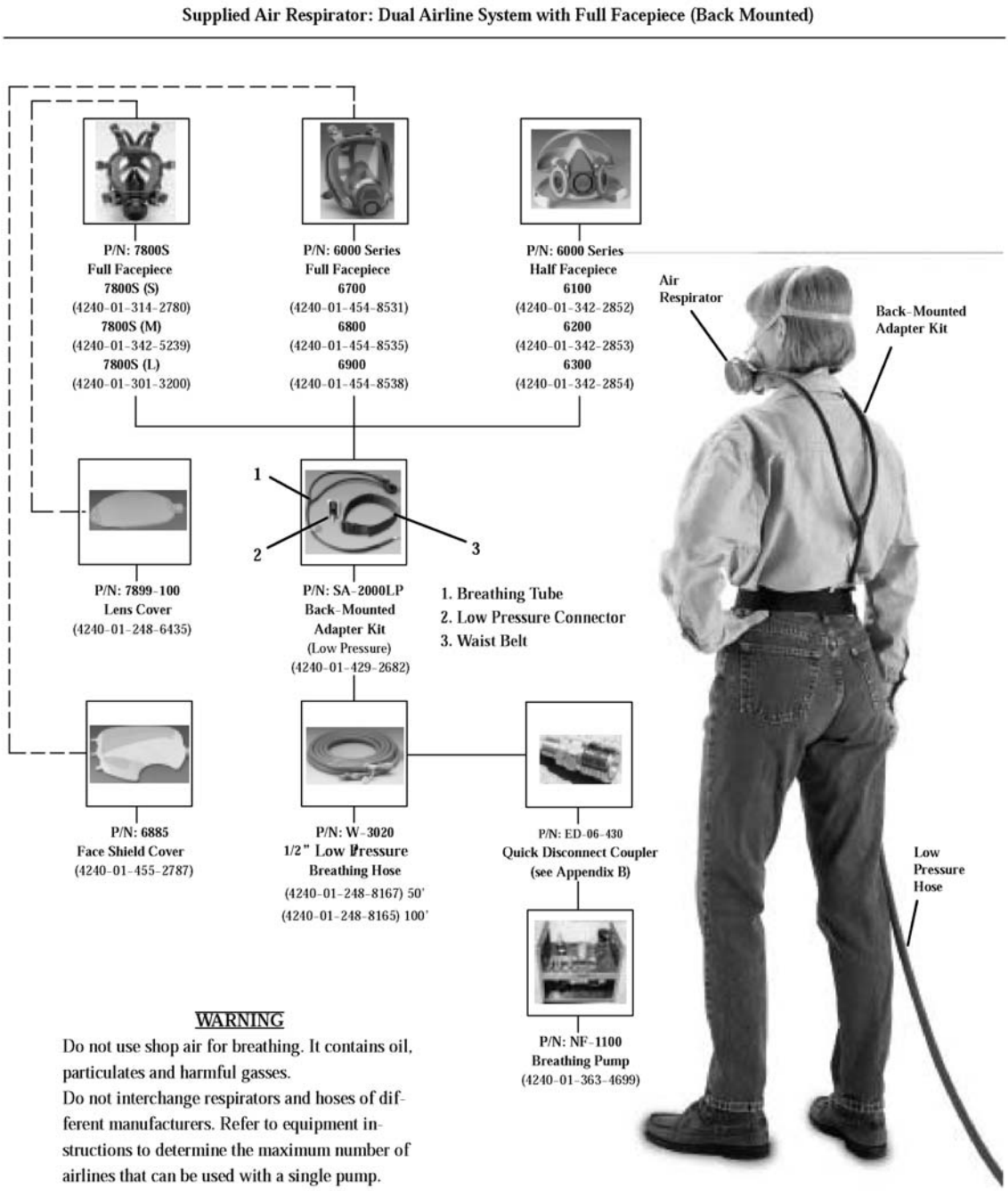

Figure B-1. Back Mounted Full Facepiece Respirator

Supplied Air Respirator: Single Airline System with Full Facepiece (Front Mounted)

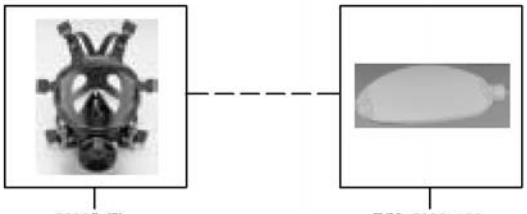

7800S (S)
(4240-01-314-2780)
7800S (M)
(4240-01-342-5239)
7800S (L)
(4240-01-301-3200)

P/N: 7899-100
Lens Cover
(4240-01-248-6435)

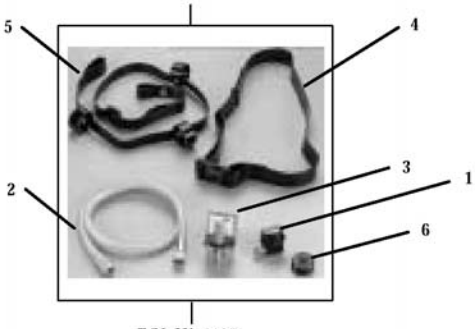

P/N: W-3197
Low Pressure Air Regulating Kit
(4240-01-251-8165)
Use with 1/2" ID hose (W-3020).
Includes 1 each of the following:

1. - W-3187 adapter assembly (4240-01-380-4955)
2. - W-3188 breathing tube (4240-01-380-4942)
3. - W-3195 low pressure connector (4240-01-251-8167)
4. - W-3217 waist belt (4240-01-301-4375)
5. - W-3229 shoulder strap (4240-01-314-4568
6. - 7890 plug for facepiece port (Open Purchase)

WARNING

Do not use shop air for breathing. It contains oil, particulates and harmful gasses.
Do not interchange respirators and hoses of different manufacturers. Refer to equipment instructions to determine the maximum number of airlines that can be used with a single pump.

P/N: W-3020
1/2" Low Pressure Hose
(4240-01-248-8167) 50'
(4240-01-248-8165) 100'

P/N: ED-06-430
Quick Disconnect Coupler
(see Appendix B)

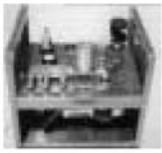

P/N: NF-1100
Breathing Pump
(4240-01-363-4699)

Figure B-2. Front Mounted Full Facepiece Respirator

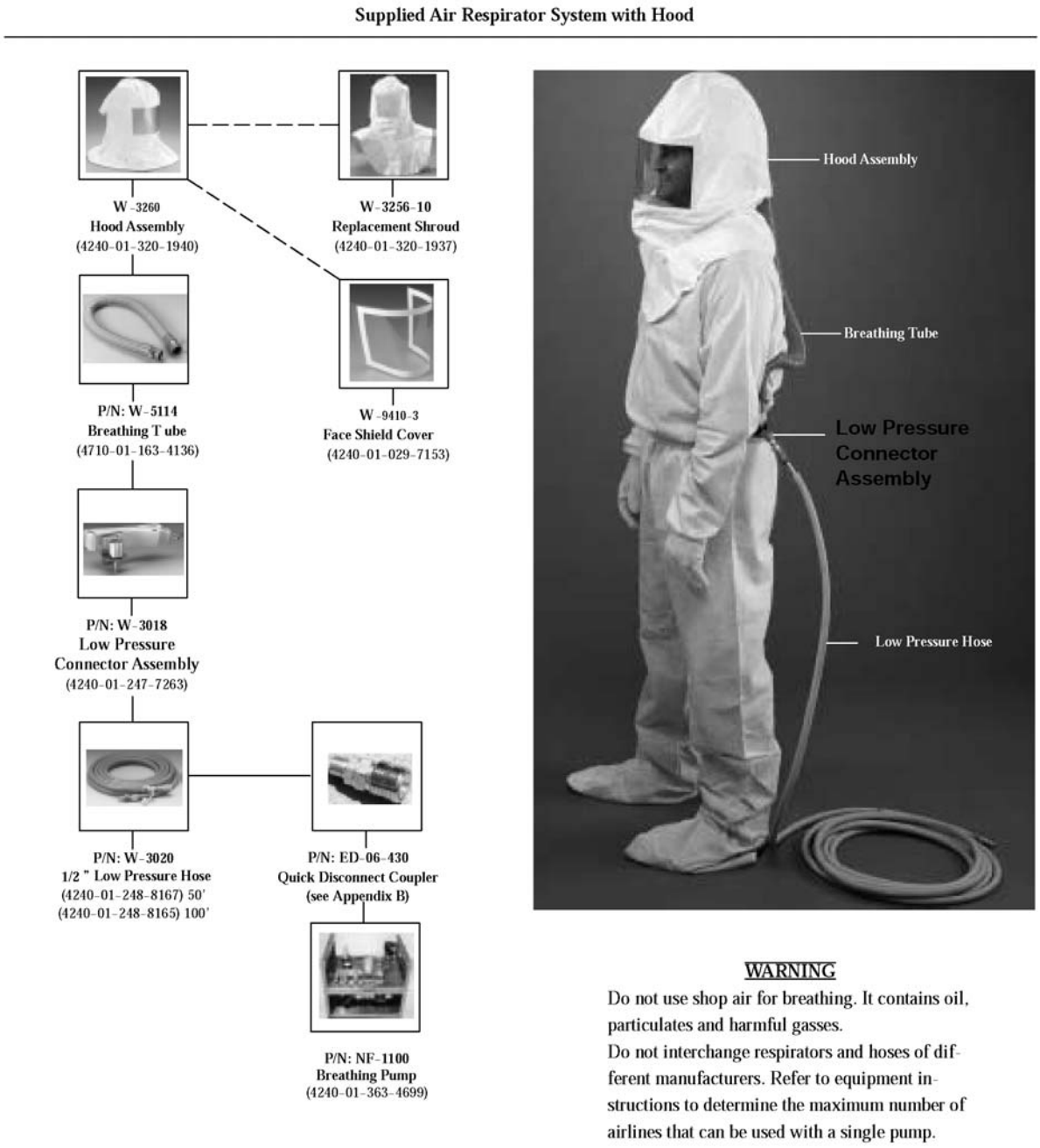

WARNING

Do not use shop air for breathing. It contains oil, particulates and harmful gasses.

Do not interchange respirators and hoses of different manufacturers. Refer to equipment instructions to determine the maximum number of airlines that can be used with a single pump.

Figure B-3. Hooded Air Respirator System

GLOSSARY

A

Active metal — A metal prone to corrode or being corroded.

Additive — A compound added for a particular purpose; for example, additives in fuel and lubricants can prevent corrosion, gum formation, varnishing, sludge formation, and knocking.

Aeration (Oxygen Concentration) Cell — An electrolytic cell in which the driving force to cause corrosion results from a difference in the amount of oxygen in solution at one point as compared to another. Corrosion is accelerated in areas where the oxygen concentrated is least, for example, in a crevice or under packing or gaskets.

Alkaline — Having a pH of more than 7.

Alloy — A combination of two or more metals.

Anaerobic — A process which is capable of occurring in the absence of oxygen.

Anion — A negatively charged ion of an electrolyte which migrates toward the anode. The chloride ion in sea water is an anion.

Anode — The electrode of a corrosion cell at which oxidation or corrosion occurs. It may be a small area on the surface of a metal or alloy, such as that where a pit develops, or it may be the more active metal in a cell composed of two dissimilar metals, (i.e., the one with the greater tendency to go into solution). The corrosion process involves the change of metal atoms into cations with a liberation of electrons that migrate through the metal to the cathode of the cell.

Anodic protection — The reduction or elimination of corrosion of a metal achieved by making current flow from it to the solution by connecting it to the positive pole of a source of current. Under most conditions, as the potential of an initially active metal is gradually shifted in a more noble direction, such as by potentiostatic means, the corrosion current gradually increases. However, with suitable combinations of metal and solution, a critical potential is soon reached. Imposing a potential higher than the critical potential, causes the current to drop to a very low value, and the metal becomes passive. The potential of metal has to be regulated by a potentiostat.

Anodize — To subject (a metal) to electrolytic action as the anode of a cell in order to coat with a protective or decorative film (anodic oxidation film).

Austenitic — A term applied to that condition of iron associated with a change in crystal structure that makes it non-magnetic. This occurs with ordinary iron at an elevated temperature. When sufficient chromium and nickel are present, steel becomes austenitic (non-magnetic) at atmosphere temperatures. This is the case with the many stainless alloys that combine about 18% chromium and 8% or more nickel with iron.

C

Cathode — The less active electrode of a corrosion cell, where the action of the current causes reduction and nearly complete elimination of corrosion.

Cathodic Protection — The reduction or elimination of corrosion of a metal that is achieved by making current flow to it from a solution, such as connecting it to the negative pole of some source current. The source of the protective current may be sacrificial metal, such as magnesium, zinc, or aluminum. The current may also be derived from a rectifier, generator, or battery applied through an appropriate anode which may be connected by the applied current (as in the case of steel), or which remains substantially unaffected by the current, as in the case of platinum. Cathodic protection becomes complete when anodic reactions are completely suppressed and only cathodic reactions occur on the metal surface.

Cation — A positively charged ion in an electrolyte which migrates toward the cathode. Metallic ions, such as iron or copper, are cations.

Caustic Embrittlement — The result of the combined action of tensile stress and corrosion in an alkaline solution that causes embrittlement. This is the most frequently encountered in the laps of riveted boilers where the required concentration of the alkali in the boiler water occurs.

Cell — In corrosion processes, a cell is a source of electrical current that is responsible for corrosion. It consists of an anode and a cathode immersed in an electrolyte and electrically joined together. The anode and cathode may be separate metals dissimilar areas on the same metal.

Chemical Conversion Coating — A film deliberately produced on a metal by immersing it in, brushing it with, or spraying it with a selected chemical solution for the purpose of providing improved corrosion resistance to the metal or increasing the adhesion of organic coatings to be applied later. Coatings covered by MIL-C-5541 are examples.

Clear water — Colorless water containing no visible suspended particles.

Combustible Liquid — Any liquid having a flashpoint at or above 100° F, but below 200° F.

Concentration Cell — An electrolytic cell consisting of an electrolyte and two electrodes of the same metal or alloy that develops a difference in potential as a result of a difference in concentration of ions (most often metal ions) or oxygen at different points in a solution.

Corrosion Fatigue — A reduction in the ability of a metal to withstand cyclic stress caused by its exposure to a corrosive environment.

Corrosion Rate — The speed of corrosion attack. It is usually expressed in terms of weight loss per unit of time.

Couple — Two or more metals or alloys in electrical contact with each other so that they can act as the electrodes of a cell if they are immersed in an electrolyte.

Cracking —

a. — Localized breaking of a paint film to expose the underlying material.

b. — Breaking of metal or alloy in a brittle fashion along a narrow path or network.

Crevice Corrosion — Corrosion occurring within a crevice formed by two or more parts of the same or different metals or formed by a metal and non-metallic material. Stainless steel and aluminum alloys are particularly susceptible to crevice corrosion.

Critical Humidity — The relative humidity, under a specific set of conditions, at which a metal or an alloy will begin to corrode. In the presence of hygroscopic (moisture absorptive) solids or corrosion products, the critical humidity will be lowered. Steel will not corrode if the relative humidity is less than 30% in a marine atmosphere.

D

Deposit Attack — When foreign material (dirt, corrosion products, etc.) is deposited on the surface of a metal, it may shield the metal from the oxygen necessary to regenerate a protective oxide layer. An oxygen concentration cell is formed, and serious corrosion may result. Also called an active-passive cell.

E

Electrochemical Corrosion — Corrosion which occurs when current flows between cathodic and anodic areas on metallic surfaces.

Electrode — A metal or alloy that is in contact with electrolyte and serves as the site where electricity passes in either direction between the electrolyte and metal. The current in the electrode itself is a flow of electrons, whereas, in the electrolyte, ions carry electric charges and their orderly movement in solution constitutes a flow of current in the electrolyte.

Electrolysis — In the strict sense of the term, electrolysis concerns chemical changes in the solution or electrolyte due to the passage of current. Its relation to corrosion arises only if the corrosion process alters the make-up of the solution. Hence, since the term is most closely related to the solution phenomena than to corrosion, its use to indicate corrosion should be discouraged.

Electrolyte — Any substance which, in solution or fused, exists as electrically charged ions that render the liquid capable of conducting a current. Soluble acids, bases, and salts, such as sea water, are electrolytes.

Electromagnetic Interference (EMI) — Radiation generated from electromagnetic fields which are produced by radar antennas, Radio Frequency (RF) antennas, onboard transmitters, certain poorly designed avionics units, electric motors, and lightning and other natural effects. This type of radiation can interfere with aircraft avionics systems causing electrical malfunctions.

Electromotive Force (EMF) Series — A list of elements according to their standard electrode potentials. The more negative the potential the greater the tendency of the metal to corrode. This series is useful in studies of thermodynamic properties, but does not indicate the rates of corrosion. A hydrogen gas electrode is the standard reference and its potential is designated as zero. All potentials are positive or negative with respect to the hydrogen electrode. In this country, the potentials of zinc and iron are designated as negative and those of copper and platinum as positive.

Embrittlement — Severe loss of ductility of a metal alloy that results in a brittle fashion.

Erosion — Destruction of a metal by the combined action of corrosion and abrasion or attrition by a liquid or gas with or without suspended matter.

Exfoliation — The breaking away of material from its surface in flakes or layers.

F

Faying Surfaces — The common surfaces between mating parts.

Filiform Corrosion — Corrosion that develops under coatings on metals in fine ragged hairlines, usually wavy or curved and randomly distributed.

Film — A thin layer of material that may or may not be visible.

Flammable Liquid — Any liquid having a flash point of 100° F or less.

Flashpoint — The minimum temperature at which a liquid gives off an ignitable vapor in any one of the closed cup flashpoint testers (Penssky-Martens, Taglibue, or Seta-Flash).

Fretting Corrosion — Corrosion at the interface of two connecting surfaces, usually under high pressure and subject to very minute slippage due to relative vibration of surfaces that ordinarily are not supposed to move relative to each other, such as a shrink fit.

G

Galvanic — The flow of direct current between dissimilar metals.

Galvanic Corrosion — The accelerated corrosion of an active metal caused by the presence of a less active metal in the same solution and in contact with the more active metal.

Galvanic Series — A list of metals and alloys arranged in order of their relative potentials in a given environment. The order of their arrangement in this list may be different in other environments.

H

Hazardous Material — A material which may pose a threat to human health or the environment when improperly handled or disposed of.

Hazardous Waste — Waste which is characterized by the Environmental Protection Agency (EPA) as 1) ignitable, 2) corrosive, 3) reactive, or 4) toxic, as defined in 40 CFR 261, or is a listed hazardous waste identified in that regulation.

Hydrogen Embrittlement — Loss of ductility of a metal, caused by the entrance or absorption of hydrogen ions into the metal, as in the pickling of metal.

I

Inhibitor — As applied to corrosion, a chemical substance or mixture which, when added in small amounts to a solution, markedly decreases corrosion.

Inorganic Coatings — Electroplated coatings, conversion coatings, anodic coatings, phosphate coatings, and oxide coatings.

Ion — An electrically charged atom or group of atoms. The sign of the charge is positive in the case of cations and negative in the case of anions.

L

Local Cell — A cell in which the driving force is due to a difference in potential between areas on a metal or alloy surface immersed in an electrolyte. The potential difference may be due to inclusions, lack of homogeneity, varying concentration of the solution with respect to oxygen or metal ions, etc.

M

Metal Ion Concentration Cell — A cell established on a metal surface due to different concentrations of its ions in the electrolyte which is in contact with the metal surface. These variations in concentration result in local differences in potential, thus allowing the establishment of a local cell.

Mill Scale — The heavy oxide layer formed during hot fabrication or heat treatment of metals. The term is most frequently applied to the scale of mixed iron oxides on iron and steel.

Mottling — Appearance of spotting or blotches of different color or shades of coloring.

N

Noble Metal — A metal usually found as an uncombined metal in nature. Platinum, gold, and silver are noble metals.

Non-Destructive Inspection — A method used to check the soundness of a material or a part without impairing or destroying the serviceability of the part.

O

Organic Coatings — Paints, lacquers, plastics, greases, etc.

Oxidation — Any change involving the loss of electrons by an atom. Any corrosion process involves oxidation of the metal in a true chemical sense. It also may imply the destruction of metal or alloy as a result of the direct action of oxygen on the metal, e.g., the scaling of steel at high temperatures.

Ozone — A triatomic (O3) form of oxygen.

R

Room Temperature Vulcanizing (RTV) — A process for curing of synthetic rubber or plastic materials which occurs at room temperature.

S

Solvent — A liquid substance capable of dissolving or dispersing one or more other substances.

T

Thixotropic — Gel-like in physical property.

Titration — A method or the process of determining the concentration of a dissolved substance in terms of the smallest amount of reagent of known concentration required to bring about a given effect or reaction with a known volume of the test solution.

U

Ultraviolet (UV) Light — Light (electromagnetic radiation) of a wavelength shorter than visible light but longer than X-ray radiation. Long wavelength UV from the sun causes sunburn. Short wavelength UV from unfiltered UV lamps can damage unprotected eyes.

Uniform Surface Corrosion — Corrosive etching of metal involving only the surface.

W

Wording — The following definitions are adhered to in preparing this manual:

May — is used only when a procedure is optional.

Shall — is used only when a procedure is mandatory.

Should — is used only when a procedure is recommended but not mandatory.

Will — is used to indicate future action but never to indicate a mandatory procedure.

INDEX

Subject — Paragraph, Figure, Table Number

A

AIR INTAKE DUCTS FOR JET AIRCRAFT . . . 7.15
APPLICATION OF POLISH AND WAX . . . 3.8
APPLICATIONS . . . 6.2

B

BATTERY COMPARTMENTS, BOXES, AND ADJACENT AREAS . . . 7.2
Cleaning and Neutralizing Procedures . . . 7.2.2
Paint Systems . . . 7.2.3
BERYLLIUM-COPPER ALLOYS, BERYLLIUM-ALUMINUM ALLOYS, AND BERYLLIUM OXIDE . . . 7.20
Corrosion Removal and Treatment . . . 7.20.1
Depot Maintenance . . . 7.20.2

C

CHEMICAL DEFINITIONS . . . 2.3
Atom . . . 2.3.1
Electrolyte . . . 2.3.4
Electron . . . 2.3.2
Ions . . . 2.3.3
CLEANING COMPOUNDS . . . 3.3
Alkaline Cleaners . . . 3.3.1
Aqueous Parts Washer Cleaning Solutions . . . 3.3.3
Dilution . . . 3.3.7
Miscellaneous Cleaning Agents . . . 3.3.5
Solvents . . . 3.3.4
Steam Cleaning . . . 3.3.6
CLEANING EQUIPMENT . . . 3.4
Aqueous Parts Washers . . . 3.4.9
High Pressure/Hot Water Wash Equipment . . . 3.4.1
Miscellaneous Equipment . . . 3.4.10
Miscellaneous Large Cleaning Equipment . . . 3.4.5
Pneumatic Vacuum Cleaner . . . 3.4.7
Portable, 15 Gallon, Foam Generating, Cleaning Unit . . . 3.4.2
Portable, 45 Gallon, Foam Generating Cleaning Unit . . . 3.4.3
Spray Cleaning Guns for Solvents . . . 3.4.6
Turbine Engine Compressor Cleaning Equipment . . . 3.4.4
Universal Wash Unit . . . 3.4.8
CLEANING PROCEDURES . . . 3.5
Cleaning Methods . . . 3.5.2
Clear Water Rinsing of Aircraft . . . 3.5.3
Fungus Growth Removal . . . 3.5.6
Post Cleaning Procedures . . . 3.5.4
Soil Barriers . . . 3.5.7
Treatment and Disposal of Wash Rack Waste . . . 3.5.5
Warnings and Cautions . . . 3.5.1
CLOSELY COILED SPRINGS . . . 7.16
Long Term Storage . . . 7.17.2
Short Term Storage . . . 7.17.1
COMMON AREAS . . . 4.5

INDEX - CONTINUED

Subject	Paragraph, Figure, Table Number
Battery Compartments and Battery Vent Openings	4.5.14
Bilge Areas	4.5.13
Control Cables	4.5.10
Electrical Connectors and Other Components	4.5.16
Engine Exhaust and Gun Gas Impingement Areas	4.5.4
Engine Frontal Areas and Air Inlet Ducts	4.5.7
Fasteners	4.5.1
Faying Surfaces and Crevices	4.5.2
Flap and Slat Recesses	4.5.6
Hinges	4.5.9
Magnesium Parts	4.5.15
Relief Tube Outlets	4.5.11
Spot-Welded Assemblies	4.5.3
Water Entrapment Areas	4.5.12
Wheel Wells and Landing Gear	4.5.5
CORRECTIVE ACTIONS	5.3
CORROSION CONTROL PROGRAM	1.1
Facilities	1.1.3
Maintenance	1.1.2
Training	1.1.1
CORROSION REMOVAL	5.5
Abrasive Blasting	5.5.4
Mechanical Methods	5.5.1
Non-Powered Tools and Materials	5.5.2
Power Tools and Materials	5.5.3
CORROSION REMOVAL FROM THIN METAL (0.0625 INCH THICKNESS AND LESS)	7.14
CORROSION REMOVAL PROCEDURES-MECHANICAL	5.8
Abrasive Blasting Corrosion Removal	5.8.4
Non-Powered Mechanical Corrosion Removal	5.8.2
Powered Mechanical Corrosion Removal	5.8.3
Warnings and Cautions	5.8.1
CORROSION REMOVAL-CHEMICAL	5.9
Aluminum Alloys	5.9.1
Copper And Copper Based Alloys	5.9.5
Magnesium Alloys	5.9.2
Plated And Phosphated Surfaces	5.9.7
Stainless Steel (Cres) And Nickel Based Alloys	5.9.4
Titanium And Titanium Based Alloys	5.9.6
CORROSION TREATMENT FOR STEEL CABLES	7.4
CORROSIVE ENVIRONMENTS	2.9
Animal Damage	2.9.14
Climate	2.9.8
Factors of Influence in Tropical Environments	2.9.9
Industrial and Ship Emitted Air Pollutants	2.9.13
Manufacturing	2.9.10
Micro-Organisms	2.9.15
Moisture	2.9.1
Other Industrial Pollutants	2.9.5
Ozone	2.9.4
Salt Atmospheres	2.9.3

INDEX - CONTINUED

Subject — Paragraph, Figure, Table Number

Sand, Dust, and Volcanic Ash . . . 2.9.6
Shipment . . . 2.9.12
Solar Radiation . . . 2.9.7
Storage . . . 2.9.11
Temperature . . . 2.9.2

D

DEFINITION OF CORROSION . . . 2.2
DEGRADATION OF NON-METALS . . . 2.10
DEGREES OF CORROSION . . . 4.4
Light Corrosion . . . 4.4.1
Moderate Corrosion . . . 4.4.2
Severe Corrosion . . . 4.4.3
DEPLETED URANIUM COUNTER-WEIGHTS . . . 7.18
Corrosion and Finish Damage Treatment Procedures . . . 7.18.1
DEVELOPMENT OF CORROSION . . . 2.5
Corrosion Under Painted Surfaces . . . 2.5.1

E

ELECTRICAL AND ELECTRONIC EQUIPMENT . . . 7.11
Antennas . . . 7.11.6
Conduit and Junction Boxes . . . 7.11.2
Grounding and Bonding Connections . . . 7.11.1
Wires and Cables . . . 7.11.3
EMERGENCY PREPARATIONS . . . 8.3
Emergency Reclamation Equipment . . . 8.3.3
Emergency Reclamation Team . . . 8.3.2
Priority Removal List of Equipment and/or Components . . . 8.3.1
Production Planning . . . 8.3.4
EMI SEALS AND GASKETS . . . 7.21
Treatment of EMI Seals and Gaskets . . . 7.21.1
EQUIPMENT . . . 6.4
Application Nozzles . . . 6.4.2
Injection Gun . . . 6.4.3
Sealant Gun . . . 6.4.1
Sealant Kits (Semkits®) . . . 6.4.4
Sealant Removal and Application Tools . . . 6.4.5
EVALUATION OF CORROSION DAMAGE . . . 4.3

F

FACTORS INFLUENCE CORROSION . . . 2.6
Anode and Cathode Surface Area . . . 2.6.3
Biological Organisms . . . 2.6.9
Dissimilar Metal Coupling (Galvanic Corrosion) . . . 2.6.2
Electrolyte Concentration . . . 2.6.8
Electrolytes . . . 2.6.6
Heat Treatment and Grain Direction . . . 2.6.5
Mechanical Stress . . . 2.6.10
Oxygen . . . 2.6.7
Temperature . . . 2.6.4

INDEX - CONTINUED

Subject — Paragraph, Figure, Table Number

Time . . . 2.6.11
Type of Metal . . . 2.6.1
FAYING SURFACES AND ATTACHMENT POINTS . . . 7.7
Attaching Parts and Hardware . . . 7.7.2
Faying Surfaces, Joints, and Seams . . . 7.7.1
Severely Corroded (Rusted) Hardware . . . 7.7.3

G

GENERAL CLEANING PROCEDURES . . . 8.5
Alternate Methods . . . 8.5.2
Primary Method . . . 8.5.1
Treatment After Exposure to Volcanic Ash . . . 8.5.8
Treatment After Landing on a Foamed Runway . . . 8.5.7
GENERAL PROCEDURES . . . 8.4
Clean . . . 8.4.3
Disassembly/Removal of Components . . . 8.4.2
Removal of Contaminated Installed Equipment . . . 8.4.1
Tagging . . . 8.4.4
GENERAL SAFETY INSTRUCTIONS . . . 1

I

INSPECTION METHODS . . . 4.2
Depth Gauge . . . 4.2.2
Eddy Current Inspection . . . 4.2.6
Fluorescent Penetrant Inspection . . . 4.2.5
Optical Depth Micrometers. . . . 4.2.4
Radiographic Inspection . . . 4.2.8
Ultrasonic Inspection . . . 4.2.7
Visual inspection . . . 4.2.1
Visual Inspection with a Borescope . . . 4.2.3
INTEGRAL AND EXTERNAL FUEL TANKS AND DROP TANKS . . . 7.6
INTRODUCTION . . . 3.2
Aircraft Clear Water Rinse Requirements . . . 3.2.3
Immediate Cleaning . . . 3.2.4
Reasons for Cleaning . . . 3.2.1
When to Accomplish Work . . . 3.2.2
INTRODUCTION . . . 3.6
Application of Conventional Lubricants . . . 3.6.3
Conventional Lubricants . . . 3.6.1
Solid Film Lubricants . . . 3.6.2
INTRODUCTION . . . 3.7
Description of CPC's . . . 3.7.5
Non-Operational Preservation . . . 3.7.2
Operational Preservation . . . 3.7.1
Preservation Application Methods . . . 3.7.7
Preservation of Specific Areas . . . 3.7.6
Time Limitations of CPC's. . . . 3.7.4
Types of CPC's . . . 3.7.3
INTRODUCTION . . . 7.1
INTRODUCTION . . . A.1

INDEX - CONTINUED

Subject — Paragraph, Figure, Table Number

Consumable Materials Containers . . . 8.1.2
Local Environmental Laws and Regulations . . . 8.1.4
Local Purchase . . . 8.1.3
Shelf Life . . . 8.1.1
Units of Issue Codes . . . 8.1.5
INTRODUCTION . . . B.1
Unit Of Issue Codes . . . 8.1.1
Introduction to corrosion theory . . . 2.1

M

MATERIALS . . . 1.3
METALS AFFECTED BY CORROSION . . . 2.8
Aluminum . . . 2.8.3
Anodized Aluminum . . . 2.8.4
Cadmium . . . 2.8.7
Copper and Copper Alloys . . . 2.8.6
CRES/Stainless Steel . . . 2.8.8
Graphite/Carbon Fiber Composites . . . 2.8.11
Magnesium . . . 2.8.1
Nickel and Chromium . . . 2.8.9
Silver, Platinum, and Gold . . . 2.8.10
Steel . . . 2.8.2
Titanium . . . 2.8.5
MONEL RIVETS . . . 7.19

N

NATURAL AND SYNTHETIC RUBBER PARTS . . . 7.8
NON-STRUCTURAL TUBING MEMBERS AND ASSEMBLIES . . . 7.13
Aluminum Alloy Tubing . . . 7.13.1
Cadmium Plated Steel Tubing . . . 7.13.3
Removable Installations . . . 7.13.5
Special Instructions for Tubing Fittings and Sleeves . . . 7.13.4
Stainless Steel (CRES) Tubing . . . 7.13.2

P

PAINT REMOVAL . . . 5.4
PEENING OF METAL SURFACES . . . 5.11
Roto-Peening (Rotary Flap Peening) Procedures . . . 5.11.2
Types of Peening . . . 5.11.1
PIANO TYPE HINGES . . . 7.5
POTABLE WATER TANKS . . . 7.9
PREVENTIVE MAINTENANCE . . . 2.11
PREVENTIVE MAINTENANCE PROGRAM . . . 3.1
Preventive Maintenance . . . 3.1.1
PURPOSE . . . 1
Detailed Inspections . . . 4.1.4
Frequency of Inspections . . . 4.1.2
General Inspections . . . 4.1.3
Responsibility . . . 4.1.1
Usage . . . 0.1.1

INDEX - CONTINUED

Subject — Paragraph, Figure, Table Number

PURPOSE . . . 5.1
PURPOSE . . . 5.10
Application of Surface Treatments . . . 5.10.4
Chemical Prepaint Treatments . . . 5.10.1
Notes on Conversion Coating/Surface Treatment . . . 5.10.5
Post Treatment . . . 5.10.6
Precautions . . . 5.10.3
Surface Preparation . . . 5.10.2
Temporary Preservation . . . 5.10.7
PURPOSE . . . 6.1
PURPOSE . . . 8.1
Pitting on Critical Structure . . . 5.7
Purpose . . . 4.1

R

RELIEF TUBE AREAS . . . 7.3
RESPONSIBILITY . . . 5.2
RESPONSIBILITY FOR CHANGES TO THIS MANUAL . . . 4
Recommended Changes, Corrections, or Deletions . . . 0.4.1
RESPONSIBILITY . . . 8.2

S

SAFETY . . . 1.2
Materials handling . . . 1.2.2
Responsibility of Supervisors . . . 1.2.1
SAFETY PRECAUTIONS . . . 3
SCOPE . . . 2
Alphabetical Index . . . 0.2.14
Appendix A, Consumable Materials . . . 0.2.11
Appendix B, Equipment for Cleaning and Corrosion Prevention and Control . . . 0.2.12
Chapter 1, Introduction . . . 0.2.3
Chapter 2, Corrosion Theory . . . 0.2.4
Chapter 3, Preventive Maintenance . . . 0.2.5
Chapter 4, Inspection and Corrosion Prone Areas . . . 0.2.6
Chapter 5, Corrosion Removal and Surface Treatment . . . 0.2.7
Chapter 6, Sealants . . . 0.2.8
Chapter 7, Treatment of Specific Areas . . . 0.2.9
Chapter 8, Emergency Procedures . . . 0.2.10
Foreword . . . 0.2.1
Glossary . . . 0.2.13
Safety Summary . . . 0.2.2
SEALANT APPLICATION PROCEDURES . . . 6.6
Adhesion Promoters . . . 6.6.3
Brush Spatula or Caulking Gun Application . . . 6.6.4
Cleaning . . . 6.6.1
Masking . . . 6.6.2
Spray Gun Application . . . 6.6.5
SEALANT MIXING . . . 6.5
Application Life . . . 6.5.1
Mixing MIL-PRF-81733, Type III Spray-able Sealant Coating . . . 6.5.3

INDEX - CONTINUED

Subject	Paragraph, Figure, Table Number
Storage Instructions	6.5.2
SEALING COMPOUNDS	6.3
Adhesion Promoters	6.3.4
Polysulfide, Polyurethane, and Polythioether Sealing Compounds	6.3.2
Sealant Packaging	6.3.1
Silicone Sealing Compounds	6.3.3
SEALING OF SPECIFIC AREAS	6.7
Damaged Sealant	6.7.10
Depressions	6.7.9
Extensive Repair	6.7.11
External Aircraft Structure	6.7.8
Fastener Sealing	6.7.4
Faying Surface Sealing	6.7.1
Fillet Sealing	6.7.2
Form-In-Place (FIP) Gasket Sealant Repair	6.7.6
High Temperature Areas	6.7.12
Injection Sealing	6.7.3
Integral Fuel Cells/Tanks and Removable Fuel Tanks	6.7.5
Low Temperature Curing	6.7.13
SPECIFIC EXTERNAL AREAS OF AIRCRAFT	8.7
Aircraft Fuel Systems	8.7.9
Airframes	8.7.1
Antennas	8.7.2
Armament	8.7.8
Helicopter Main and Tail Rotor Blades	8.7.7
Helicopter Transmission, Rotor Head, and Rotor Hub	8.7.6
Reciprocating Engines	8.7.3
Turbine Engines	8.7.4
SPECIFIC INTERNAL AREAS	8.6
Aircraft Cockpit Area	8.6.1
Aircraft Ejection Seats	8.6.2
Avionic, Electronic and Electrical Equipment	8.6.3
Photographic Equipment	8.6.4
STORAGE/SHELF LIFE CONTROL OF SEALANTS	6.8
STRUCTURAL TUBING MEMBERS AND ASSEMBLIES	7.12
Structural Aluminum Alloy Tubing	7.12.1
Structural Carbon Steel Tubing	7.12.4
Structural Magnesium Alloy Tubing	7.12.2
SURFACE FINISH	5.6

T

THEORY OF CORROSION	2.4
Anode	2.4.1
Cathode	2.4.2
Electrical contact	2.4.4
Electrolyte	2.4.3
TYPES OF CORROSION	2.7
Corrosion Fatigue	2.7.7
Crevice/Concentration Cell Corrosion	2.7.6
Exfoliation Corrosion	2.7.5

INDEX - CONTINUED

Subject — Paragraph, Figure, Table Number

Filiform Corrosion 2.7.8
Fretting Corrosion 2.7.9
Galvanic Corrosion 2.7.2
High Temperature Oxidation (Hot Corrosion) 2.7.10
Intergranular Corrosion 2.7.4
Pitting Corrosion 2.7.3
Uniform Surface Corrosion 2.7.1

W

WARNINGS, CAUTIONS, AND NOTES 2