TO 00-25-223

TECHNICAL MANUAL

INTEGRATED PRESSURE SYSTEMS AND COMPONENTS (PORTABLE AND INSTALLED)

F09603-89-D-3074
F09603-99-D-0382

DISTRIBUTION STATEMENT - Approved for public release; distribution is unlimited.

Published Under Authority of the Secretary of the Air Force

1 JUNE 1991

CHANGE 6 - 8 JANUARY 2004

BASIC AND ALL CHANGES HAVE BEEN MERGED
TO MAKE THIS A COMPLETE PUBLICATION

LIST OF EFFECTIVE PAGES

INSERT LATEST CHANGED PAGES. DESTROY SUPERSEDED PAGES.

NOTE: The portion of the text affected by the changes is indicated by a vertical line in the margins of the page. Changes to illustrations are indicated by miniature pointing hands. Changes to wiring diagrams are indicated by miniature pointing hands or by shaded areas. A vertical line running the length of a figure in the outer margin of the page indicates that the figure is being added.

Dates of issue for original and changed pages are:

Original . . . . . 0 . . . . . .1 June 1991
Change. . . . . 1 . . . . . .8 September 1995
Change. . . . . 2 . . . . . 26 February 1996
Change. . . . . 3 . . . . . 29 March 2001
Change. . . . . 4 . . . . . .20 September 2002
Change. . . . . 5 . . . . . 7 February 2003
Change. . . . . 6 . . . . . 8 January 2004

TOTAL NUMBER OF PAGES IN THIS PUBLICATION IS 296, CONSISTING OF THE FOLLOWING:

Page No.	*Change No.
Title	**6**
A	**6**
i - vi	3
vii	**6**
viii Blank	3
ix - x	3
1-1 - 1-12	0
1-13 - 1-14	3
1-15 - 1-32	0
1-33 - 1-34	1
1-35 - 1-50	0
1-51 - 1-52	2
1-53 - 1-54	0
1-55 - 1-56	1
1-57 - 1-85	0
1-86 Blank	0
1-87 - 1-114	0
1-115 - 1-116	3
1-117 - 1-155	0
1-156 Blank	0
1-157 - 1-158	3
1-159 - 1-170	0
1-171 - 1-176 Added	**6**
2-1 - 2-6	0
3-1 - 3-6	0
4-1 - 4-3	0
4-4 Blank	0
5-1	0
5-2 Blank	0
6-1 - 6-30	0
A-1 - A-11	0
A-12 Blank	0
B-1 - B-5	0
B-6 Blank	0
C-1 - C-7	0
C-8 Blank	0
D-1 - D-2	4
D-3 - D-4	5
D-5 - D-33	0
D-34 Blank	0
FP-1 Deleted	**6**
FP-2 Blank Deleted	**6**
FP-3 Deleted	**6**
FP-4 Blank Deleted	**6**

*Zero in this column indicates an original page.

TABLE OF CONTENTS

Section/Para		Page
	LIST OF ILLUSTRATIONS	iv
	LIST OF TABLES	vii
	INTRODUCTION	ix
CHAPTER 1 -	GENERAL	1-1
I	GENERAL REQUIREMENTS	1-1
1-1	General	1-1
1-3	Operating Pressures	1-1
1-5	Selection of Materials	1-1
1-7	System Installation	1-1
1-9	Testing	1-1
1-11	Inspection and Maintenance	1-1
II	DESIGN CONSIDERATIONS	1-3
1-13	Basic Considerations in System Design	1-3
1-15	Pressure Ranges and Suitable Equipment Items	1-3
1-17	Service Fluid and Pressure Limitations	1-5
1-25	Physical Arrangement of Systems and Components	1-5
1-31	Identification of Piping and Equipment	1-6
1-33	Material Selection and Compatibility	1-6
1-45	Miscellaneous System Design Problem Areas	1-12
1-58	System Cleanliness	1-13
1-61	Testing of Systems	1-13
1-63	Associated Systems	1-14
III	COMPONENTS SELECTION	1-15
1-72	General Information	1-15
1-91	Pipe	1-17
1-112	Tubing	1-28
1-145	Pipe Fittings	1-31
1-169	Tube Fittings	1-39
1-186	Pressure Vessels	1-54
1-202	Gaskets and Seals	1-55
1-259	Flex Hose	1-67
1-268	Pressure Gages	1-69
1-275	Valves and Regulators	1-70
1-300	Pumps	1-75
1-312	Cryogenic Components	1-77
IV	FABRICATION OF COMPONENTS	1-87
1-340	Pipe Components	1-87
1-357	Tubing Components	1-88
1-396	Hangers, Supports, and Tiedowns	1-93
1-431	Flex Hose	1-103
1-450	Expansion Members	1-105
1-456	Torquing Recommendations and Procedures	1-105
1-485	Pressure Vessels	1-114
1-488	Cylinder Outlet Connections	1-114
V	FABRICATION AND INSTALLATION OF SYSTEMS	1-115
1-490	General Requirements	1-115
1-528	Connections	1-119
1-573	Anchors, Hangers, and Supports	1-127
1-596	System Identification	1-130
1-623	Flex Hose	1-137
1-634	Transfer of Components from One Service Fluid to Another	1-144
1-636	Connecting Systems of Different Pressure Ratings	1-144
VI	TESTING COMPONENTS AND SYSTEMS	1-145
1-638	General Test Requirements	1-145
1-641	Types of Hydrostatic Tests	1-145
1-646	Reference to Hydrostatic Testing	1-145
1-648	Hydrostatic Test Requirements Prior to Installation	1-146
1-670	Schedule of Hydrostatic Tests for Installed Items	1-149
1-688	Detail Requirements for Hydrostatic Test and Leak Test of Installed Systems	1-150
VII	INSPECTION AND MAINTENANCE	1-157
1-717	Inspection of Components Prior to Installation	1-157

TABLE OF CONTENTS - Continued

Section/Para — Page

1-728 Inspection of System on Completion of Installation 1-159
1-740 Periodic Inspection and Maintenance of Systems and Components 1-160
1-761 Troubleshooting System Leaks 1-162

VIII OPERATION 1-165
1-767 Training and Qualifications 1-165
1-778 Personnel Protective Equipment 1-166
1-785 System Checkout 1-166
1-794 Qualifications of System Checklist 1-168
1-796 Test Procedures 1-168
1-804 Welding on High-Pressure Systems 1-169

CHAPTER 2 - MISSILE SUPPORT SYSTEMS 2-1

I GENERAL REQUIREMENTS 2-1
2-1 General 2-1
2-3 Design Considerations 2-1
2-29 Installation 2-3
2-34 Test After Installation 2-5
2-36 Inspection and Maintenance 2-5

CHAPTER 3 - AIRBORNE SYSTEMS 3-1

I GENERAL REQUIREMENTS 3-1
3-1 General 3-1
3-3 System Installation 3-1
3-5 Testing 3-1
3-7 Inspection and Maintenance 3-1

II DESIGN CONSIDERATIONS 3-1
3-9 Pressure Ranges and Suitable Equipment Items 3-1
3-11 Hydraulic Systems 3-1
3-13 Cryogenic Systems 3-1
3-15 Fuel Systems 3-1

III COMPONENT SELECTION 3-2
3-17 General Information 3-2
3-19 Safety Factors 3-2
3-21 Tube Data 3-2
3-25 Flex Hose 3-2

IV FABRICATION OF COMPONENTS 3-4

V FABRICATION AND INSTALLATION OF SYSTEMS 3-4
3-29 General Requirements 3-4
3-32 Cleaning 3-4
3-35 Tapered Pipe Thread Connections 3-5

VI TESTING COMPONENTS AND SYSTEMS 3-5
3-37 General Test Requirements 3-5

VII INSPECTION AND MAINTENANCE 3-6
3-40 General Requirements 3-6

CHAPTER 4 - AEROSPACE GROUND EQUIPMENT 4-1

I GENERAL REQUIREMENTS 4-1
4-1 General 4-1
4-3 Operating Pressures 4-1
4-5 Selection of Material 4-1
4-7 System Installation 4-1
4-9 Testing 4-1
4-11 Inspection and Maintenance 4-1

II DESIGN CONSIDERATIONS 4-2

III COMPONENT SELECTION 4-2

IV FABRICATION OF COMPONENTS 4-2

V FABRICATION AND INSTALLATION OF SYSTEMS 4-2

VI TESTING COMPONENTS AND SYSTEMS 4-2
4-22 General 4-2
4-25 Hydrostatic Testing Procedures for High Pressure AGE Systems 4-2
4-38 Flex Hose Containment 4-3

CHAPTER 5 - PRESSURE VESSEL RUPTURE HAZARDS AND SAFETY CRITERIA FOR BARRICADES AND SYSTEMS 5-1

I GENERAL REQUIREMENTS 5-1
5-1 General 5-1

TABLE OF CONTENTS - Continued

Section/Para — Page

CHAPTER 6 - VACUUM SYSTEMS 6-1

I GENERAL REQUIREMENTS 6-1
- 6-1 General 6-1
- 6-3 Operating Vacuum Pressures 6-1
- 6-5 Selection of Materials 6-1
- 6-7 System Installation 6-1
- 6-9 Testing 6-1
- 6-11 Inspection and Maintenance 6-1

II DESIGN CONSIDERATIONS 6-2
- 6-13 Basic Considerations in System Design 6-2
- 6-15 Vacuum Limitations 6-2
- 6-17 Material Selection 6-2

III COMPONENT SELECTION 6-2
- 6-19 Pipe 6-2
- 6-21 Vacuum Pumps 6-2
- 6-41 Vacuum Valves 6-8
- 6-58 Vacuum Gages 6-13
- 6-79 Fittings 6-18
- 6-81 Gaskets and Seals 6-18
- 6-84 Cold Traps 6-18

IV FABRICATION OF COMPONENTS 6-23
- 6-86 General Requirements 6-23

V FABRICATION AND INSTALLATION OF SYSTEMS 6-23
- 6-88 Workmanship 6-23
- 6-90 Cleaning 6-23
- 6-92 Welding and Soldering 6-23
- 6-95 Joints and Fittings 6-23

VI TESTING COMPONENTS AND SYSTEMS 6-24
- 6-98 General Test Requirements 6-24
- 6-100 Leak Detection Tests 6-24
- 6-107 Bubble Tests 6-26
- 6-109 Location of Leak by Isolation 6-26
- 6-111 Spark Coil Method of Leak Testing 6-26
- 6-114 Overall Test for Joint Leak 6-27
- 6-120 Leak Testing an O-Ring 6-27
- 6-122 Leaks in an Adsorbent Containing Enclosure 6-27

VII INSPECTION AND MAINTENANCE 6-28
- 6-124 Inspection of Components Prior to Installation 6-28
- 6-126 Inspection of System on Completion of Installation 6-28
- 6-132 Repair of Leaks 6-28
- 6-135 Lubrication 6-28
- 6-141 Periodic Inspection of Systems and Components 6-30

VIII OPERATION 6-30
- 6-143 System Checkout 6-30
- 6-144 Schedule of Leak Testing 6-30

APPENDIX I A-1
- A-1 General A-1
- A-3 Mechanical Symbols A-1
- A-5 Working Pressures for Tubing and Pipe A-1
- A-12 Verification Tests - Tube Fittings A-1
- A-20 Tube Support Spacing A-5
- A-26 Verification Tests - Tube Supports A-8
- A-35 Conversion Tables A-9

APPENDIX II - GLOSSARY B-1

APPENDIX III - BIBLIOGRAPHY C-1

APPENDIX IV - CROSS REFERENCE D-1

ALPHABETICAL INDEX ..... INDEX 1

LIST OF ILLUSTRATIONS

Figure	Title	Page
1-1	Pressure Range, 0 to 3,000 PSIG	1-3
1-2	Pressure Range, 3,001 to 6,000 PSIG	1-4
1-3	Pressure Range, 6,001 to 15,000 PSIG	1-4
1-4	Suitable Materials	1-7
1-5	Dimensions of Welded and Seamless Steel Pipe	1-18
1-6	Material Strength at 100°F (38°C)	1-19
1-7	Pipe Size Function	1-20
1-8	Maximum Allowable Working Pressures Nomograph	1-22
1-9	Maximum Allowable Working Pressures for Unthreaded Stainless Steel Pipe	1-23
1-10	Maximum Allowable Working Pressures for Unthreaded Carbon Steel Pipe	1-23
1-11	Maximum Allowable Working Pressures for Unthreaded Type 6061-T6 Aluminum Alloy Pipe	1-24
1-12	Maximum Allowable Working Pressures for Unthreaded Red Brass and Copper Pipe	1-25
1-13	National Taper Pipe Thread	1-26
1-14	Normal Thread Engagement	1-29
1-15	Standard Tubing Wall Thickness	1-30
1-16	Superpressure Tubing Wall Thickness	1-32
1-17	Minimum Tensile Strength For Tubing	1-32
1-18	Maximum Allowable Working Pressures, Annealed Stainless Steel Tubing	1-32
1-19	Maximum Allowable Working Pressures, 1/4-Hard Stainless Steel Tubing	1-33
1-20	Maximum Allowable Working Pressures, 5052 Aluminum Alloy Tubing	1-33
1-21	Maximum Allowable Working Pressures, Type N Copper Tubing	1-34
1-22	Maximum Allowable Working Pressures, Copper Tubing	1-34
1-23	Maximum Allowable Working Pressures, Superpressure Tubing	1-35
1-24	Maximum Allowable Working Pressures (PSIG), Non-Shock Conditions, Steel Flanges	1-36
1-25	American Standard Flanges	1-37
1-26	High-Pressure Lens-Ring Fitting	1-41
1-27	Standard AN Flared Tube Fitting	1-42
1-28	Standard MS Flareless Tube Fitting	1-42
1-29	Standard AN and MS Fittings	1-43
1-30	Standard AN and MS Flared Fittings	1-47
1-31	Standard MS Flareless Fittings	1-51
1-32	Precision-Type Fittings	1-52
1-33	AN and MS Fittings, Straight-Thread Sizes	1-53
1-34	AN and MS Fittings, Tapered-Thread Sizes	1-53
1-35	Application of O-Rings and Gaskets	1-57
1-36	O-Ring Dimensions	1-58
1-37	O-Ring Extrusion	1-59
1-38	Entering Chamfer	1-60
1-39	Internal Chamfer	1-60
1-40	O-Ring Gland Surface Finish	1-61
1-41	Flat Diaphragm Used as Separating Membrane	1-64
1-42	Flat Diaphragms	1-64
1-43	Rolling Diaphragm Operation	1-65
1-44	Rolling Diaphragm Scuffing Action	1-65
1-45	Rolling Diaphragm Rim Configuration Classes	1-66
1-46	Rolling Diaphragm Sidewall Scrubbing Action	1-66
1-47	Standard Military Specification Flexible Hose	1-68
1-48	Standard Industrial Flexible Hose	1-69

LIST OF ILLUSTRATIONS - Continued

Figure	Title	Page
1-49	Gate, Globe, and Needle Valves	1-72
1-50	Solenoid Valves	1-73
1-51	Relief, Expansible Tube, and Check Valves	1-74
1-52	Regulators and Regulation System	1-76
1-53	Positive Displacement Pumps	1-78
1-54	Non-Positive Displacement Pumps	1-79
1-55	Typical Vacuum Insulated Tee	1-81
1-56	Typical Vacuum Insulated Elbow	1-82
1-57	Standard Valve Modified for Cryogenic Service	1-83
1-58	Vacuum Insulated Cryogenic Valve	1-84
1-59	Bend Radii for Conduit and Fluid Lines	1-90
1-60	Standard Dimensions for Double Flare Tubing End	1-91
1-61	Standard Dimensions for Single Flare Tubing End	1-92
1-62	Go-Not-Go Gages	1-93
1-63	Very Heavy-Walled Tubing	1-94
1-64	Strap Dimensions	1-98
1-65	VG Interlocking Clamp Installation	1-99
1-66	Clamps, Description/Federal Stock No	1-100
1-67	Hangers, Brackets, and Anchor	1-101
1-68	Clamps, Saddles, and Pipe Rolls	1-102
1-69	Hose Length Dimensions	1-104
1-70	Expansion Members	1-106
1-71	Recommended Torque Values for Oil-Free, Cadmium-Plated Threads	1-107
1-72	Recommended Torque Values for Dry or Near Dry Threads	1-108
1-73	Torque Conversion Chart	1-109
1-74	Torquing Recommendations	1-111
1-75	Load in Pounds on Alloy Steel Bolt-Studs When Torque Loads are Applied to Lubricated Bolts	1-112
1-76	Vacuum Insulated Cryogenic Transfer Line	1-117
1-77	Foam Insulated Cryogenic Transfer Line	1-118
1-78	Installation of Tubing	1-118
1-79	Installation of Fitting With MS33656 End Into AND 10050 Boss	1-120
1-80	Installation of Fitting With MS33657 End Into AND 10050 Boss (Except Hydraulic and Pneumatic)	1-121
1-81	Installation of Hydraulic and Pneumatic Fittings With MS33657 Fitting End Into AND10050 Boss	1-122
1-82	Installation of Fittings With MS33657 Ends Through Bulkheads or Brackets	1-123
1-83	Assembly of Flared Tube to Fitting	1-123
1-84	Recommended Torque Values for Flared and Flex Tubing B-Nuts	1-124
1-85	Recommended Torque Values for Fitting	1-124
1-86	Forming Tool for Superpressure Tubing	1-125
1-87	Superpressure Tubing Threads	1-126
1-88	Threading Tool for Superpressure Tubing	1-127
1-89	Methods of Installation of System Supports	1-128
1-90	Spacing of Standard Tubing Supports	1-129
1-91	Spacing of Superpressure Tubing Supports	1-129
1-92	Support Spacing for Standard Weight Pipe Filled With Fluid at 62.4 Pounds Per Cubic Foot	1-129
1-93	Class of Hazard Identification Markings	1-131
1-94	Identification Markings Associated with Various Contents	1-132

LIST OF ILLUSTRATIONS - Continued

Figure	Title	Page
1-95	Identification Tape Installation	1-134
1-96	Color Specifications	1-135
1-97	Color Code, Geometric Symbols and FSN	1-136
1-98	Identification Tag Detail	1-138
1-99	Identification Stencil Detail	1-139
1-100	Installation of Flex Hose	1-140
1-101	Installation of Restraint of Flex Hose	1-141
1-102	Typical Hose Container Assemblies	1-142
1-103	Brogart Safety Latches Installation	1-143
1-104	Pressure Gage Inspection	1-161
1-105	Troubleshooting Pipe and Fitting Leaks	1-162
1-106	Electropneumatic Control Valve	1-167
1-107	Portable and Stationary Vapor Detectors	1-168
1-108	Safety Equipment	1-169
2-1	Tunnel Section	2-4
2-2	Conventional Elastomer Shock Mount	2-4
2-3	Rubber Sandwich-Type Shock Mount	2-4
2-4	Coil Spring Shock Mount for Piping	2-4
2-5	Coil Spring Shock Mount for Heavy Equipment	2-5
3-1	Airborne Flex Hose	3-2
6-1	Rotary Vane Pump	6-3
6-2	Rotary Piston Pump	6-3
6-3	Roots-Type Slower	6-3
6-4	Steam Ejector	6-4
6-5	Four-Stage Diffusion Pump	6-5
6-6	Turbomolecular Pump	6-6
6-7	Sputter-Ion Pump	6-7
6-8	Cryogenic Pump	6-8
6-9	Typical Vacuum Pumping System	6-9
6-10	Vacuum Valves	6-10
6-11	Ranges of Measurement for Available Vacuum Gages	6-13
6-12	McLeod Vacuum Gage	6-14
6-13	Thermocouple Vacuum Gage	6-15
6-14	Pirani Vacuum Gage	6-15
6-15	Hot-Wire Ionization Vacuum Gage	6-16
6-16	Bayard-Alpert Vacuum Gage	6-17
6-17	Phillips Cold-Cathode Ionization Gage	6-18
6-18	Inverted Magnetron Gage	6-19
6-19	Mass Spectrometer	6-20
6-20	Vacuum Flanged Fitting with O-Ring	6-21
6-21	Vacuum Flanged Fitting with Gasket	6-21
6-22	Threaded Vacuum Line Fitting	6-21
6-23	Vacuum Flange Fitting for Electrical Leads	6-21
6-24	Liquid Nitrogen Refrigerated Cold Trap	6-22
6-25	Cold Trap for Use in Vacuum Lines	6-22
6-26	Leak Detector Test Setup	6-24
6-27	Leak Test Blanket Installation (Welded Joint)	6-25
6-28	Leak Test Blanket Installation (Flange Joint)	6-26
6-29	Pump-out Method of Leak-Testing O-Rings	6-27
A-1	Mechanical Symbols	A-2

LIST OF ILLUSTRATIONS

Figure	Title	Page
A-2	Maximum Span for Standard Wall Pipe	A-6
A-3	Maximum Span for Standard Tubing	A-7
A-4	Volume Conversion Table	A-9
A-5	Pressure Conversion Table	A-10
A-6	Vacuum Conversion Table	A-10
A-7	Size Conversion Chart	A-11

LIST OF TABLES

Number	Title	Page
1-1	Characteristic Advantages and Limitations of the Fourteen Families of Elastomers	1-171
1-2	Physical Properties and Relative Performance for the Fourteen Types of Elastomers	1-173

INTRODUCTION

This technical manual for Integrated Pressure Systems and Components (Portable and Installed) is prepared as a directive for personnel engaged in the operation, installation, testing, and maintenance of low medium, high pressure, and vacuum pressure systems, aerospace ground equipment, test equipment and installed missile support equipment.

Real property installed equipment and industrial property specifically excluded by regulations from technical order coverage are exempt from the requirements of this technical order.

Service conditions for installation of this type are more rigorous than those normal to general industry. Proper selection of material and equipment, use of correct fabrication procedures, and installation and maintenance by competent personnel will ensure safe and efficient operation of pressure systems.

When requirements of this technical order restrict the development of the R and D field, the requirements outlined are waived.

Data in this manual have been selected from, or are in agreement with, codes or accepted standards for the selection, installation, and maintenance of all pressure fluid systems. These instructions shall not be applied to specific systems unless the information required is not contained in the technical order, maintenance manuals, etc., for that system.

Chapter 1, GENERAL, contains all data that are applicable to two or more of the following chapters: Chapter 2, MISSILE SUPPORT SYSTEMS; Chapter 3, AIRBORNE SYSTEMS; Chapter4, AEROSPACE GROUND EQUIPMENT; and Chapter 5, FACILITIES (INSTALLED PROPERTY). Chapters 2 and 5 contain data that are unique to the applicable chapter; text here refers to Chapter 1 when necessary. Chapter 6, VACUUM SYSTEMS, contains all data pertaining to vacuum systems.

Reference has been made in this manual to the following technical manuals and specifications which contain applicable data and instructions:

SPECIFICATION NUMBER	TITLE
MIL-H-5440	Hydraulic Systems, Aircraft Types I and II, Design, Installation and Data requirements for.
MIL-P-5518	Pneumatic Systems, Aircraft, Design Installation, and Data Requirements for.
MIL-P-8564	Pneumatic System Components, Aeronautical General Specifications for.
MIL-H-8775	Hydraulic System Components, Aircraft and Missile General Specification for.

TECHNICAL MANUAL NUMBER	TITLE
AFM 160-39	The Handling and Storage of Liquid Propellants
AFM 127-100	Explosive Safety Manual
AFOSH STD 127 Series	Accident Prevention Handbook
AFM 127-201	Missile Safety Handbook
TO 00-20K-6	Inspection and Age Control-Equipment Prime at OCAMA
TO 00-25-224	Welding High Pressure and Cryogenic Systems.
TO 00-25-229	Valves and Regulators for Integrated Pressure Systems

INTRODUCTION

(CONT)

TO 1-1A-8	Engineering Handbook Series for Aircraft Repair - Aircraft Structural Hardware.

SPECIFICATION NUMBER	TITLE
TO 1-1A-15	General Maintenance Instruction for Support Equipment.
TO 15X-1-1	Maintenance Instruction-Oxygen Equipment.
TO 42E-1-1-1	Aerospace Hose Assemblies
MIL-STD-1247	Identification of Pipe, Hose, and Tube Lines for Aircraft, Missile, and Space Systems

In addition to the manuals and specifications listed, there are many specific equipment manuals. The general category of equipment and basic technical manual number are listed below as a guide. Consult the appropriate index to find a required specific technical manual within the following categories:

GENERAL CATEGORY	BASIC TECHNICAL MANUAL NUMBER
Aircraft Hoses	42E1
Calibration Procedures	33K
Decontamination Equipment	35EA, 35E17
Filtering	40W
Fuel	6J or 42B
Fuel and Oil Handling Equipment	37A7Fuel
Transfer	6A
Gas Storage and Servicing	42B
General Purpose Test Equipment	33A, 33AA
Hazards	11H5
Hydraulics	9H
Hydraulic Systems Components	35MA1
Hydro-Pneumatic Systems	35M5
Loading and Servicing Equipment	35D30
Lubricants	428
Missile Ground Operational Equipment	31P1
Missile Propellant Storage and Handling Equipment	37C
Missile Support Equipment	35M
Oxygen	15X
Pneumatics	9P2
Position and Pressure Instruments	5P
Publications	37A9
Installations	00-105
Interchangeability and Cross-Reference Charts	00-45
Miscellaneous	00-25
Visual Inspection	00-20
Pumps	37A
Quantity and Flow Measuring Instruments	5L
Real Property Installed Equipment, Missile	35R
Seals	42E2
Sensing Devices	15A5
Shop Support Equipment	34Y
Special Purpose Test Equipment	33D, 33DA
Special Tools	32A
Utility Operating Equipment	35E
Vacuum	9V-1

CHAPTER I

GENERAL

SECTION I

GENERAL REQUIREMENTS

1-1. GENERAL.

1-2. Pressure systems contain gases or liquid under pressure and, sometimes, extreme temperatures. As programs progress, frequent modifications or additions to the systems may be required. With this type of operation, it is essential to the safety personnel and proper operation of equipment that the general requirements listed be complied with by all personnel.

1-3. OPERATING PRESSURES.

1-4. The pressure range covered by this manual is 0 to 15,000 psia. the upper limit is predicated by the present technological knowledge and limitations and can be expected to change in the future. Pressures below atmospheric (vacuum systems) are covered in Chapter 6. Pressure system safety precautions apply to all pressures in this range. The degree of hazard in pressure systems is proportional to the amount of energy stored, not the amount of pressure present. Therefore, low-pressure, high-volume systems can be as hazardous to personnel as high-pressure systems.

Pressure systems shall be designated as follows;

Low Pressure	0 to 500 psi
Medium Pressure	501 to 3,000 psi
High Pressure	3,001 to 10,000 psi
Ultra High Pressure	Above 10,000 psi

Steam pressure designations shall be as specified in ASME code and are not covered by this technical order.

1-5. SELECTION OF MATERIALS.

1-6. Only materials listed as compatible for each specific service shall be selected. Consider all operating conditions of the service fluid, such as temperature and pressure prior to selection. Materials compatible with a service fluid at one temperature and pressure may not be compatible at another temperature and pressure. Materials selected shall be compatible with each other as well as with the service fluid. When operating temperatures vary greatly, care shall be taken to select materials with comparable coefficients of thermal expansion. (Reference BSD Exhibit 62-135 Comparable Materials.)

1-7. SYSTEM INSTALLATION.

1-8. Installation of pressure systems shall be performed with the highest order of workmanship in compliance with accepted practices pertaining to proper fitting, alignment, bending, supporting, and identification. Welders shall be certified in accordance with procedures established by TO 00-25-224. Welders working on pressure piping shall not “strike an arc” on the piping. Each indentation is a stress raiser, and an arc striking plate, suitably grounded, should be used.

NOTE

All systems shall be marked in accordance with MIL-STD-1247.

1-9. TESTING.

1-10. Since leaks can never be tolerated in pressure systems, all new, repaired, or modified systems or portions of systems shall be proof and leak tested prior to activation. Periodic testing of pressure systems shall be in accordance with applicable system technical manuals. In the absence of specific instructions in a particular system technical manual, procedures in this manual shall apply.

1-11. INSPECTION AND MAINTENANCE.

1-12. Systems shall be checked for proper workmanship by the immediate supervisor and/or technical inspector during installation and modification.

NOTE

For heat treated material a coupon should be taken from the same material batch that the component is fabricated from, and should be treated concurrently with each pressure system component. The laboratory test data showing ultimate and yield strengths, hardness, etc, should accompany each item when feasible. The data shall be made available to the inspector prior to acceptance.

The technical inspector shall inspect and approve all final installations. The cognizant inspector shall permanently stamp his identification symbol or number on or adjacent to the component nameplate. Periodic checks shall be made by the immediate operating supervisor and/or technical inspector to ensure safe and reliable operation of the systems. In the event of a system failure, notify the cognizant engineering personnel so that a system failure analysis report can be prepared. If there is a need for a component substitution, consult with cognizant engineering personnel and obtain approval prior to the selection of a substitute part.

CHAPTER 1

SECTION II

DESIGN CONSIDERATIONS

1-13. BASIC CONSIDERATIONS IN SYSTEM DESIGN.

1-14. When a piping system is designed, a number of factors must be considered to provide a safe facility. Among these are reliability, compatibility, and maintainability. The system should be as simple, basic, and foolproof as possible. This adds to the reliability and safety of the system. No single malfunction or misoperation of any component should create a major hazard or incident. Calculations for maximum allowable pressure shall be used on ultimate strength or yield strength as determined by cognizant engineering and safety personnel. Welded pipe or tubing should have a minimum of six inches between runs or between pipe and structure, when welded in place.

1-15. PRESSURE RANGES AND SUITABLE EQUIPMENT ITEMS.

1-16. Pressure equipment is readily divided into convenient pressure ranges. (See figures 1-1 through 1-3.) The division is based on the availability of equipment items, the capability of equipment to meet pressure requirements, and the economy of maximum equipment coverage with minimum overlap. The items of equipment listed under each pressure range are intended as a basis for the selection of equipment types. They do not represent a complete listing of all items suitable for a specific pressure range: however, they will provide the minimum requirements for a safe workable system.

ITEM	TYPE AND METHOD OF CONNECTION
a. PIPE	ASA (American Standards Association) B31.1 (Refer to paragraph 1-91.)
Method of connection	Standard ASA flange, thread, or weld.
b. TUBING	Standard commercial and Military Specification tubing. (Refer to paragraph 1-112.)
Method of connection	Standard AN (Air Force-Navy, MS, and industrial flared or flareless type fittings of like material.
c. HOSE	Standard commercial and Military Specification hose. (Refer to paragraph 1-259.)
d. VALVES, REGULATORS, FILTERS, ETC.	Industrial and other type equipment with a minimum safety factor of 4 (to burst nonshock condition).
Method of connection	Same as a and b.
e. FITTINGS	PIPE - Standard ASA flange, thread, or weld. (Refer to paragraph 1-145.) TUBING - Standard AN, MS, and industrial type flared or flareless fitting of like material. (Refer to paragraph 1-169.)
Method of connection	Same as a and b.
f. RECEIVERS - STORAGE VESSELS	State certified, ICC (Interstate Commerce Commission), or ASME (American Society of Mechanical Engineers) code vessels. (Refer to paragraph 1-186.)
Method of connection	Same as a and b.

Figure 1-1. Pressure Range, 0 to 3,000 PSIG

ITEM	TYPE AND METHOD OF CONNECTION
a. PIPE	ASA B31.1 (Refer to paragraph 1-91.)
Method of connection	Standard ASA flange, or thread weld.
b. TUBING	Military Specification corrosion-resistant steel tubing. (Refer to paragraph 1-112.)
Method of connection	Precision MS, or flared fittings of corrosion-resistant steel.
c. HOSE	Military Specification hose. (Refer to paragraph 1-259.)
d. VALVES, REGULATORS, FILTERS, ETC.	Industrial and other type equipment with a minimum safety factor of 4 (to burst nonshock condition).
Method of connection	Same as a and b.
e. FITTINGS	PIPE - Standard ASA flange, thread, or weld. (Refer to paragraph 1-145.) TUBING - Standard AN, MS, precision flared fittings of corrosion-resistant steel. (Refer to paragraph 1-169.)
Method of connection	Same as a and b.
f. RECEIVERS - STORAGE VESSELS	Special equipment designed in accordance with recommended formula of the ASME unfired pressure vessel code with state certification.
Method of connection	Same as a and b.

Figure 1-2. Pressure Range, 3,001 to 6,000 PSIG.

ITEM	TYPE AND METHOD OF CONNECTION
a. PIPE	Standard piping is limited in this range. Every item should be considered special and calculated for each application.
Method of connection	Butt weld, thread (taper thread is limited to 10,000 psig), and specially designed flanges and fittings (American Instrument Company, Cardox, or equivalent).
b. TUBING	Standard high-pressure stainless steel and chrome molybdenum (American Instrument Company, Pressure Products Industries, or approved equal).
Method of connection	Standard high-pressure, union-type connector (American Instrument Co., Pressure Products Industries, or approved equal).
c. HOSE	Military Specification hose only after approval of cognizant safety officer. High density polyethylene hose (Specification MIL-H-27462) is the only hose authorized for use with pressure above 6,000 psi.
d. VALVES, REGULATORS, FILTERS, ETC.	Industrial or high-pressure type equipment with a minimum safety factor of 4 (to burst nonshock condition).
Method of connection	Same as a and b.
e. FITTINGS	Same as a and b.
f. RECEIVERS - STORAGE VESSELS	Special equipment designed in accordance with recommended formula of the ASME unfired pressure vessel code with state certification.

Figure 1-3. Pressure Range, 6,001 to 15,000 PSIG.

1-17. SERVICE FLUID AND PRESSURE LIMITATIONS.

1-18. A pressure system is defined as any system above 0 psig. While it is convenient to list equipment types into pressure ranges, it cannot be construed that all service fluids may be used to the limits of the pressure ranges established. It is desirable, then to list the pressure limits for various service fluids independent, of the equipment pressure ranges. The listed service pressure limits (paragraphs 1-19 through 1-23) are based on the potential hazard involved with the fluid or other inherent characteristics of the fluid that limit the pressure ranges for the specific fluid.

Pressure systems shall be defined as follows:

Low Pressure	0 to 500 psi
Medium Pressure	501 to 3,000 psi
High Pressure	3,001 to 10,000 psi
Ultra High Pressure	Above 10,000 psi

1-19. PNEUMATICS (AIR, NITROGEN, OXYGEN, HELIUM, AND HYDROGEN).

1-20. Operational pneumatic systems are in the pressure range of 0 to 10,000 psi; some laboratory systems exceed this pressure and it is expected that future operational systems will exceed this pressure.

1-21. HYDRAULIC FLUIDS.

1-22. Hydraulic fluids are limited to the pressure range of 0 to 50,000 psig.

1-23. CRYOGENIC FLUIDS.

1-24. Cryogenic fluids are limited to the following pressure ranges:

a. Liquid nitrogen . . .0 to 10,000 psig.
b. Liquid oxygen . . . . 0 to 4,000 psig.
c. Liquid hydrogen . . 0 to 6,000 psig.

1-25. PHYSICAL ARRANGEMENT OF SYSTEMS AND COMPONENTS.

1-26. RELATED SYSTEM COMPONENTS AND CONTROLS.

1-27. System components which are closely related should be arranged to allow operation and surveillance from a common point. As an example, if a man is loading or pressurizing a vessel, he should not have to leave the component he is operating to observe the vessel level or pressure. Another typical example is when a man is operating a valve remotely by pushbutton or switch, he should have positive indication at the control station that the valve has moved to the required position. This indication should be by means of a light actuated by limit switches mounted on the valve and not a light which only indicates that he has energized the control circuit to the valve.

1-28. LOCATION OF COMPONENTS.

1-29. The systems should be arranged in a manner *to* provide maximum operating safety and ease of access to all components. Manually operated valves should be located to permit operation from the side or above to prevent spillage of service fluid on the operator due to a leak or to failure of the valve seals. Any valves carrying dangerous fluids should not be located overhead in the area of an operating station. Safety valves and burst diaphragms should be located so that their operation would not cause injury to personnel standing close by or damage to the installation or equipment, or they shall be equipped with deflection devices to protect personnel and equipment. Vent lines for service fluid vapors should be extended away from work areas to prevent accidental ignition of vapors and/or injury to personnel.

1-30. System components should be located in such a manner as to provide for ease of maintenance. This is particularly important for remotely operated devices which do not require access during normal operation and are therefore often located on top of vessels or similar equipment. Access ladders and platforms should be provided for components which cannot be located in normal work areas. Accessibility should also be provided to the interior of large storage vessels; the position of manholes and the use of internal ladders is an important factor in providing maximum safety.

1-31. IDENTIFICATION OF PIPING AND EQUIPMENT.

WARNING

Failure to identify pressure system components may cause accidental operation of equipment beyond its design capabilities and can result in failure of equipment and injury to personnel. All pressure systems shall be identified and marked in accordance with MIL-STD-1247.

NOTE

All entrances to work areas where there are pressure systems with pressures exceeding 500 psig shall be posted with signs stating DANGER HAZARDOUS PRESSURE SYSTEM.

1-32. All pressure systems should have proper identification (paragraph 1-597). This is particularly important for equipment at locations remote from the basic system, and for equipment which is manually operated. In addition to color coding and/or other identification markings showing the system fluid and pressure, all equipment should be provided with nameplates which list other design features.

NOTE

The marking and identification of pressure vessels, valves, and other components shall be accomplished by some means which will not cause “stress raisers” (as would stamping) or otherwise reduce the integrity of the system.

Pressure vessels, valves, and other components should have nameplates giving the maximum allowable working pressure and temperature range, capacity, materials, contained media, item number or other identification; pumps should have nameplates giving head, capacity, and horsepower ratings.

1-33. MATERIAL SELECTION AND COMPATIBILITY.

WARNING

The following precautions shall be considered when selecting materials for pressure systems because materials and fluids specified may react explosively or chemically, causing injury to personnel and/or damage to equipment:

a. Fluorocarbon lubricants shall not be used with aluminum metal, aluminum powder, or stainless steel in contact with hydrazine.

b. Gold, even in minute amounts shall not be used in contact with hydrazine, UDMH, ammonia, or ammonia-based fuels. Where temperatures in excess of 130°F may be encountered. Elevated temperatures cause decomposition of these fuels.

c. Molybdenum, in alloy; in excess of 0.05 percent shall not be used in contact with hydrazine, UDMH, ammonia, or ammonia-based fuels where temperatures exceed the boiling point of the systems fluid.

d. Fluorinated hydrocarbons, such as Kel-F, shall not be used with aluminum in contact with gaseous oxygen.

e. Titanium shall not be used in oxygen systems where dead-end compression (adiabatic compression) conditions in excess of 750 psig per second exist.

f. Flurolube lubricants shall not be used with aluminum or magnesium materials.

METALS, O-RINGS, HOSE LINERS, GASKETS, AND PACKINGS										
SERVICE	NICKEL	ALUMINUM	CARBON STEEL	COPPER	18-8 STAINLESS	O-RINGS		HOSE LINERS	GASKETS	PACKINGS
						DYNAMIC	STATIC			
NOTE See code at end of this table.										
Pneumatic	S									
Air	S	S	S	S	S	1,2,3,	4,10	1,2,3, 4,10	4,8,9,10	4,10,11
Helium	S	S	S	S	S	1,2,3	4,10	4,10	4,8,9,28,10	4,10,11
Hydrogen	S	S	L	S	L	1,2,3	4,10	1,2,3, 4,10	4,8,9,28,10	4,10,11
Nitrogen	S	S	S	S	S	1,2,3	4,10	4,10	4,8,9,28,19	4,10,11
Oxygen	S	S	L	S	S	None	4,10	4,10	4,8,9,10	4,10,11
Hydraulic	S									
Hydraulic Fluid	S	S	L	S	S	1	4,10	1,3,4, 10	4,7,8,10	4,10,11
Lubricating Oil	S	S	S	S	S	1,5	4,10	1,3,4, 10	4,8,9,10	4,10,11
Water	S	S	S	S	S	1,2,3	4,10	1,2,3, 4,10	4,7,9,10	4,10,11
Cryogenic	S									
Fluorine (Liquid)	S	S	U	L	L	None	None	None	21,22,23	4
Hydrogen (Liquid)	S	S	U	S	S	None	4,10	None	4,7,9,10	4,10,11
Nitrogen (Liquid)	S	S	U	S	S	None	4,10	None	4,7,9,10	4,10,11
Oxygen (Liquid)	S	S	U	S	S	None	4,10	4,10	4,7,9,10	4,10,11
Other Fluids										
Oxidizers										
Chlorine Trifluoride	S	L	U	L	L	None	None	4,10	21,22,23	4,10
Fluorine (Gas)	S	L	S	S	S	None	None	4,10	21,22,23	4,10
Hydrogen Peroxide	U	S	U	U	L	24	4,10	4,10	4,7,10	4,10

Figure 1-4. Suitable Materials (Sheet 1 of 4)

METALS, O-RINGS, HOSE LINERS, GASKETS, AND PACKINGS										
SERVICE	NICKEL	ALUMINUM	CARBON STEEL	COPPER	18-8 STAINLESS	O-RINGS		HOSE LINERS	GASKETS	PACKINGS
						DYNAMIC	STATIC			
Oxidizers (Cont)										
* Nitric Acid (Fuming)	U	L	U	U	S	24	4,10	4,10	4,7,10	4,10
Nitrogen Tetroxide	L	L	L	U	S	6	4,10	4,10	4,7,10	4,10
Fuels										
Ammonia	L	L	L	U	S	1,2,3 5	4,10	1,2,3, 4,10	4,8,10	4,10,11
Gasoline	S	S	S	S	S	1	4,10	2,3,4, 10	4,8,9,10	4,10,11
Hydrazine, UDMH Hydyne	U	S	U	U	L	2	1,4, 10	4,10	4,7,10	4,10
Kerosene, JP-4, JP-5, and RP-1	S	S	S	U	S	1,5	4,10	1,3,4, 10	4,8,9,10	4,10,11
Methyl and Ethyl Alcohol	S	S	L	S	S	1,2	4,10	1,2,4, 10	4,7,10	4,10
Pentaborane	S	S	S	S	S	5,24	4,10	None	4,7,8,10	4,10,11
Others										
Acetone	S	S	S	S	S	2,3	4,10	2,4,10	4,7,8,10	4,10
Ethylene Oxide	S	U	U	U	S	3	4,10	4,10	4,10	4,10
Trichloroethylene	S	S	S	S	S	24	4,10	4,10	4,8,9,10	4,10
* Ratings based on 100°F										
Nitric Acid Solution	U	U	U	U	S	24	4,10	1,4,10	4,7,10	4,10
Hydrochloric Acid	U	U	U	U	U	24	4,10	2,4,10	4,7,10	4,10
Sulphuric Acid	U	U	U	S	S	24	4,10	4,10	4,7,10	4,10
Triethyl Aluminum	S	U	U	S	S	24	4,10	4,10	4,7,10	4,10
Triethylamine	S	S	S	U	S	2	4,10	4,10	4,7,10	4,10
Alkylboranes	S	S	S	U	S	4	4,10	4,10		

Figure 1-4. Suitable Materials (Sheet 2 of 4)

LUBRICANTS AND SEALS					
	LUBRICANTS		LUBRICANTS, SEALS, AND ANTISEIZE		
SERVICE	O-RINGS AND GASKETS (STATIC) AND DYNAMIC)	SLIDING SURFACES	STRAIGHT THREADS		TAPERED THREADS
			STATIC	DYNAMIC	
NOTE See code at end of this table.					
Pneumatic					
Air	12,13,14	12,13,14	17,29	19,29	20,29
Helium	12,13,14	12,13,14	17,26	10	20
Hydrogen	12,13,14	12,13,14	17	19	20
Nitrogen	12,13,14	12,13,14	17,26	19	20
Oxygen	14	14	17,26	18,19	20
Hydraulic					
Hydraulic Fluid	15	15	15	15	20
Lubricating Oil	13	13	17	19	20
Water	13,16	13,16	17	16	20
Cryogenic					
Fluorine (Liquid)	None	None	20	None	None
Hydrogen (Liquid)	17 static	18	14,17	18	20
Nitrogen (Liquid)	17 static	18	14,17,26	18,19	20
Oxygen (Liquid)	17 static	18	14,17,26	18,19	20
Other Fluids					
Oxidizers					
Chlorine Trifluoride	None	None	20	None	27
Fluorine (Gas)	None	None	20	None	None
Hydrogen Peroxide	25	25	17,25,26	25	20
Nitric Acid (Fuming)	14	18,25	17	19	20
Nitrogen Tetroxide	14	18	17	19	20
Fuels					
Ammonia	25	14	17	19	20
Gasoline	13	13	17	19	20
Hydrazine, UDMH, Hydyne	13,25	13,25	17	25	20

Figure 1-4. Suitable Materials (Sheet 3 of 4)

LUBRICANTS AND SEALS					
	LUBRICANTS		LUBRICANTS, SEALS, AND ANTISEIZE		
SERVICE	O-RINGS AND GASKETS (STATIC) AND DYNAMIC)	SLIDING SURFACES	STRAIGHT THREADS		TAPERED THREADS
			STATIC	DYNAMIC	
Fuels (Cont)					
Kerosene, JP-4, JP-5, and RP-1	13	13	17	19	20
Methyl and Ethyl Alcohol	13	13	17	19	20
Pentaborane	14	14	14	19	20
Others					
Acetone	None	18	17	18	20
Ethylene Oxide	14	14	19	19	20
Trichloroethylene	None	18	17	18	20
Nitric Acid Solution	14	14	17	19	20
Hydrochloric Acid	14	14	17	19	20
Sulphuric Acid	14	14	17	19	20
Triethyl Aluminum	14	14	17	14	20
Triethylamine	13	13	17	19	20

CODE

S - Satisfactory
L - Limited
U - Unsatisfactory

1 - Buna -N
2 - Butyl rubber (SR613-75)
3 - Neoprene
4 - Teflon
5 - Viton-A (SR270-70)
6 - Fluro silicone (TH 1081)
7 - Flexitallic with teflon filler
8 - JM-76
9 - Flexitallic with teflon or asbestos filler
10 - Kel-F
11 - Asbestos
12 - MIL-G-4343
13 - DC-55M
14 - Fluorolube (LG-160)
15 - Specification MIL-H-5606
16 - Specification MIL-G-23827
17 - See Applicable Aircraft/Systems TO
18 - Molykote type Z powder
19 - Fluorolube grease (GR 362)
20 - Teflon tape, Specification MIL-T-27730
21 - Aluminum 2S
22 - Soft copper
23 - Stainless steel
24 - Viton-A (SR275-70) 0
25 - DC-111
26 - Hoke slic seal
27 - Permatex No. 2
28 - High-density polyethylene, (Specification MIL-H-26666 and MIL-H-27462)
29 - Oil, Lubricating, Specification MIL-L-25681

Figure 1-4. Suitable Materials (Sheet 4 of 4)

CAUTION

Do not use carbon steel in hydraulic systems used to test components of aircraft, missile or other critical hydraulic systems.

1-34. One of the major problems in designing pressure systems is the selection of materials to be used. This applies to the basic metals used for tankage, piping, and other major components, and nonmetallic items such as gaskets, seals, packing, and lubricants. The ASA code for pressure piping states "materials that will become a permanent part of any piping system shall be suitable and safe for the conditions under which they are used." In addition to withstanding the pressure loading, materials must also exhibit resistance to deteriorating influences, such as oxidation, corrosion, abrasion, shock, sudden temperature change, and high temperature differentials. A material to be compatible must not form an explosive mixture with the service fluid. Materials selected must be compatible with each other as well as with the service fluid. When operating temperatures vary greatly, care should be taken to select materials with comparable coefficients of thermal expansion. Figure 1-4 lists materials which are suitable for various services. The metals are listed in groups which are generally suitable. It cannot, however, be assumed that every type of metal in each group can be used with the listed fluid.

NOTE

All metal in gaskets and seals must be compatible with system fluid. Compatible metallic seals are authorized for use in applications where the operating temperature exceeds or is below the safe operating temperature of elastomer "O" rings. The use of metallic seals must be approved by the design engineer or the cognizant safety officer before installation.

1-35. PNEUMATIC SYSTEMS.

1-36. Materials suitable for pneumatic systems are those that contribute negligible contamination to the service fluid, will not react chemically with the service fluid and will withstand the maximum surge pressures of the system. Since gaseous oxygen vigorously supports combustion, additional consideration must be given to materials selected for this service. Stainless steel is preferred for gaseous oxygen service. However, when it is necessary to use carbon steel, it is recommended that its usage be restricted to service conditions as follows:

a. 1,000 psig maximum pressure at ambient temperature.

b. Maximum velocity of 150 feet per second.

NOTE

Conditions in this paragraph do not apply to ICC-type storage cylinders.

1-37. HYDRAULIC SYSTEMS.

1-38. Materials suitable for hydraulic systems are those that contribute negligible contamination to the service fluid and withstand maximum surge pressures of the system. The category of hydraulic systems is broad and includes many kinds of fluids at wide ranges of temperature and pressure. When selecting material for hydraulic service, make certain that it is compatible with the service fluid at the required operating pressures and temperatures.

1-39. CRYOGENIC SYSTEMS.

WARNING

Cryogenic or other high pressure sampling ports shall be protected by irradiated polyethylene bags, polyethylene, teflon or other suitable plastic caps designed to blow off or release pressure at approximately 10 psig. Metal caps shall not be used.

1-40. Materials suitable for cryogenic service are those that retain their ductility or do not become brittle at the extreme low temperature. Metals with a minimum impact resistance of 15 foot-pounds Charpy keyhole notch or 18 foot-pounds Izod V notch are generally suitable for

cryogenic service. Nonmetals must retain some degree of flexibility and exhibit toughness to be suitable for cryogenic service.

1-41. The materials listed under other fluids in figure 1-4 are those propellants and cleaning agents used in missile installations. The metal selection is general, and each fluid should be further investigated to determine limitations within each group.

1-42. When possible, the same materials should be used for all systems to prevent the accidental misuse of incompatible materials within a system. This is particularly important in the nonmetallic materials used for maintenance of components, many of which are similar in appearance and easily misused. Another problem with some nonmetallic materials is the characteristic of absorbing the service fluid. This makes it impossible to decontaminate a component without first removing the nonmetallic internal parts, and adds the hazard of handling the components.

1-43. The leakage of the service fluid and the resulting effect on adjacent equipment must also be considered. In the case of highly corrosive fluids, electrical equipment, ductwork, and other equipment located in the same room or area must be constructed of corrosion-resistant materials or be coated with special coatings to protect them against the corrosive atmosphere. In the case of cryogenic fluids, care must be taken to prevent a major spill from causing the failure of structural members, due to the low-temperature brittleness.

1-44. When fluid lines are buried underground, they must be protected form the corrosiveness of the soil (anodic protection). Failure of underground lines is not only dangerous to the system facility, but can also result in the contamination of ground water used for potable purposes.

1-45. MISCELLANEOUS SYSTEM DESIGN PROBLEM AREAS.

1-46. SHOCK

1-47. Shock waves can be created within a system due to sudden changes in flow of the service fluid. This quite commonly is due to rapid closure of valves, and is known as “water hammer.” If velocities are high and/or the length of the line is great, high overpressures will occur which can cause rupture of the line or failure of components. The system should be designed to minimize the possibilities of these shock pressures. If the cause of shock pressures cannot be eliminated, protective devices such as surge suppressors should be added to the system to bring their amplitudes within the pressure limits of the system piping and components. Interlocks of controls and devices which control valve closure times should not be the only protection against a major incident, since these devices may be removed from the system at a future time without full knowledge of the effect created by their removal.

WARNING

Ensure that adequate pipe supports are installed adjacent to shear points. Split block, interlocking hanger clamps similar to those manufactured by VG Interlocking Tube Clamp Company, Marysville, California, or Girard Development Co., Inc. Rancho Cordova, California, are recommended for this application. Failure to ensure adequate pipe supports at shear points can cause damage to equipment and injury to personnel in the event of violent earth tremors or shock waves caused by over pressure due to blast outside a hardened facility.

1-48. Shock waves can also be created in pressure systems by overpressure due to blast outside a hardened facility. The protective measures taken for this type of shock depend on several factors, and consideration must be given to the safety of personnel, the facility structure, and other systems in the same area. If the system must be functional after the blast, components must be mounted on shock isolation structures and piping must be protected and secured to prevent rupture. If the system need not be operable after the blast, it must still be secured to prevent fragmentation and/or leakage which may cause the malfunction of an adjacent system.

1-49. EXPANSION AND CONTRACTION

1-50. Provision must be made in the design of pressure systems for expansion and/or contrac-

tion of the piping and equipment as well as the fluids themselves. Cryogenic systems require a great deal of flexibility because of the extreme temperature changes to which they are subjected by the fluids. In addition, provision must be made for the expansion of these fluids. Expansion of fluids can also be a problem in noncryogenic systems which are subjected to extreme ambient temperature changes. As a general rule, relief devices should be provided in all sections of the system which can be isolated. Pressure system piping installed in areas which have extreme temperature change must be checked for adequate flexibility. When expansion joints are used to allow for expansion or contraction of piping systems, care must be taken in the selection and application of the joints. If the wrong application is used, excessive stresses may be imposed on the system components due to forces resulting from operating pressures and/or spring forces required to compress or expand the bellows.

1-51. TRANSFER PUMPS.

1-52. The suction conditions provided for transfer pumps can be a major problem in cryogenic systems as well as noncryogenic systems which are handling fluids with high vapor pressures. If the net positive suction head (npsh) available is less than that required by the pump, cavitation will occur. This results in a vapor blocking of the pump which, in the case of combustible fluids, eliminates the cooling effect of the fluid and can cause an explosion if not detected in time. The necessary suction conditions can be provided by three basic means:

a. Pressurization of the tank which is feeding the pump.

b. Provision of sufficient static head by elevating the tank above the pump.

c. Proper sizing of the suction line.

1-53. GROUNDING, SHIELDING AND BONDING.

1-54. All pressure systems shall be properly shielded, bonded and grounded to prevent static electricity and random electrical interference from causing a malfunction in the weapon system electronic circuits or an explosion or fire in a combustible fluid system. (Research in the field of random electrical interference is in progress and additional data will be supplied when it becomes available.) All shielding, bonding, and grounding shall be in accordance with AFOSH STD 127-66, and 1-1A-15 or be approved by the systems project officer.

1-55. RELIABILITY.

1-56. Reliability has always been a major problem in pressure systems because of the nature of the materials being handled and the stringent operational requirements imposed on many of the components. Reliability in many cases does not mean that an item must function properly over and over again, but that it must work the one and only time its ultimate function is required.

1-57. The testing of one component, or a group of components, is not sufficient to assure system reliability. Quality control of all components must be maintained during manufacture. Preventive maintenance is another major step towards increased reliability. Scheduled maintenance of system components has proven effective towards increasing the reliability of pressure systems.

1-58. SYSTEM CLEANLINESS.

1-59. System cleanliness is a major problem in pressure systems. A system which has not been cleaned properly, and has not been maintained in a clean condition, can create many types of hazards. Fluids in a pressure system must pass through many small passages which can be easily restricted or completely closed by small particles of foreign material. Systems are usually cleaned component by component because of the many problems which are encountered in cleaning the great variety of components in a pressure system. Extreme care must be exercised to maintain system cleanliness during the assembly, installation, and testing of these systems. After installation, the systems should be maintained under a positive pressure at all times to minimize the possibility of the entrance of foreign material into the system. Refer to paragraph 1-496 for cleaning procedures.

1-60. The selection of system components can also have an effect on the cleanliness of a system. Care must be taken to prevent the use of components which may add contamination to the system. Filter media and valve seat material migration have caused many problems.

1-61. TESTING OF SYSTEMS.

WARNING

Do not adjust fittings under pressure.

1-62. All pressure systems must be tested prior to operation (Chapter 1, section VI). Basically, these tests are conducted to prove the structural integrity and to eliminate any points of leakage which may exist. Cryogenic systems must also be tested for the flexibility required by their very low operating temperatures. The media used for this

testing should be selected to prevent contamination of the system and at the same time minimize testing hazards.

1-63. ASSOCIATED SYSTEMS.

1-64. FIRE PROTECTION.

1-65. Fire protection systems are required for the safe handling of combustible service fluids. These systems should be of the deluge type, located in areas where the possibility of fluid leakage exists.

1-66. Fire protection systems located outside are normally actuated manually from a remote control panel. Systems within the confines of a building or structure are activated by one or more of several control devices such as fusible link sprinkler heads, temperature rate-of-rise detector, vapor detector, and manual remote control. The control circuitry for deluge systems must provide for a fail-safe system. This means that in case of power failure the system should remain operable. Provision must be made to permit manual shutting off of automatic systems, in order to prevent unnecessary damage by water after fire has been controlled.

1-67. The main function of a fire protection system is to remove the heat and to cool adjacent areas to prevent spread of the fire. Deluge system nozzles should be located in a manner to provide the maximum protection of all items, with concentration on the portions of the system which are most apt, by their failure, to cause a fire. To minimize the possibility of damaging or destroying the fire protection system during a fire or in the event of an explosion, the distribution piping for the fire protection system should not be located directly above the items being protected. Control valves should be located as near the nozzles they control as possible, to provide water to the nozzles as quickly as possible. They should not, however, be placed in a position where they must be considered when designing a fire protection system in areas where freezing may occur; this is particularly important with small control lines, which freeze easily.

1-68. EMERGENCY SHOWERS AND EYE WASH FOUNTAINS.

1-69. Emergency showers and eye wash fountains should be provided near all points where hoses are connected and disconnected. They should also be provided in areas which have items of equipment containing hazardous materials. Emergency showers and eye wash fountains should be placed against a wall and near exits or other locations which are familiar to the personnel working in the area. The piping in the area should be laid out to eliminate all obstructions and leave a clear path to the emergency units. Where units are exposed to freezing temperatures, frost-proof types should be used.

1-70. PROTECTIVE CLOTHING AND EQUIPMENT.

1-71. Necessary protective clothing and equipment and testing devices must be provided for operating, testing, and maintenance personnel.

CHAPTER 1

SECTION III

COMPONENT SELECTION

1-72. GENERAL INFORMATION.

1-73. TUBING.

1-74. Tubing can be divided into two general groups depending upon whether it is made with or without seams. It can be further divided into pipe, mechanical tubing, and pressure tubing.

1-75. Pipe is tubing made to a certain standard. Pipe has fixed wall thickness as designated at the mill and by engineers as schedule numbers and referred to by tradesmen as standard, extra-heavy (extra-strong), and double extra-heavy. The nominal pipe sizes, weights per foot, and sizes of couplings for the various schedules can be found by reference to the catalogs of tube and fitting manufacturers.

1-76. Mechanical tubing is designed and manufactured with mechanical uses in mind. Tolerances are closer than for other common classes of tubing. These closer limits save much time when the tube is to be machined and make chucking in modern automatic screw machines economically feasible. Mechanical tubing is available in a wide range of sizes. Before World War II, some mills listed between 1,500 and 2,000 sizes. This number has been reduced to 528. Many grades of mechanical tubing are partially annealed after cold-drawing. The result is a tube with sufficient hardness to be machined without tearing.

WARNING

Do not use mechanical tubing in pressure piping systems; use pressure tubing.

1-77. Pressure tubing differs from mechanical tubing in several respects. First, being primarily intended for pressure uses, it is pressure tested. Second, the dimensional tolerances are less restrictive, and third, most pressure tubes are fully annealed, since many applications involve working of the tube. Heat exchanger tubes, for example, are rolled, while boiler tubes are bent at sharp angles.

1-78. Pipe is the cheapest form of tubing suitable for carrying fluids. It is available either in the welded or seamless type. Four generally used processes are employed for making welded pipe: lap welding, gas welding, electric resistance welding, and continuous butt welding.

1-79. While the basic methods of manufacturing tubing are similar to those used for making pipe, tubing is made to closer tolerances and, therefore, requires further finishing. Two processes are used in most mills today to obtain these tolerances: hot-rolling and cold-drawing, or, as they are sometimes called, hot and cold-finishing.

1-80. Hot-rolling describes the piercing operation by which solid billets are made into tube rounds and also the further sizing operations performed while the tube round retains its original heat or is reheated for subsequent hot-working. All seamless tubing is hot-rolled; some is further finished by cold-drawing to meet closer tolerances. Cold-drawing of some stainless steels at cryogenic temperatures can increase the tensile strength by approximately 140 percent.

1-81. Tubing is available in a great variety of materials and their alloys. Some of the most commonly used tubing materials are copper, brass, aluminum, nickel, carbon steel, and stainless steel.

1-82. Pressure tubing falls into two major classifications: average wall and minimum wall. Average-wall pressure tubes are made with a wall thickness which may vary from the nominal diameter by plus or minus 10 percent if cold-finished, and by plus or minus 12-1/2 percent if hot-finished. Minimum wall tubing in made with a wall thickness that may not be less than that specified but may be heavier by 22 to 40 percent, depending on the type of tubing. In pressure-tube applications, the main requirement is strength, whereas dimensional accuracy is most important in mechanical tubes.

1-83. Stainless steel tubing can be either of the mechanical or pressure type and is available in a great variety of alloys. As a result, the metallurgy of stainless steels may be very confusing. However, as a general rule, these steels can be divided into three groups: The steels in Group A include AISI (American Iron and Steel Institute) numbers 403, 410, 416, and 420: those in Group B, AISI numbers 406, 430, and 442: and those in Group C, AISI numbers 302, 303, 304, 316, 321, and 347. There are special variations of Group C designated as the CX steels. This group had a wide-spread utilization during the war for high-temperature exhaust applications on planes. The CX steels are obtained by the addition of columbium or titanium to low carbon steel 304.

WARNING

Pressure tubing shall be used for pressure systems. Mechanical tubing shall never be used in pressure systems.

1-84. Groups A and B can best be distinguished as being magnetic stainless steels, whole Group C steels are nonmagnetic because of their austenitic structure. Another way of differentiating between the groups is by their response to heat treatment.

1-85. Group A steels respond to hardening and tempering in the same way as ordinary carbon steels. Group B and C steels do not respond to heat treatment.

1-86. Still another distinguishing property of the different groups is toughness. Unless hardened, Group A stainless steels are not brittle. Group B steels have a lower impact resistance in notched sections and those steels in Group C are extremely tough. Group A steels can be cold-drawn. The same is generally true of Group B steels. The steels in Group C will work-harden. Although they are as versatile as the steels in Groups A and B, if machining or forming is severe, it may be necessary to anneal them between operations. All these steels are corrosion-resistant, the degree depending on the application. The best for extreme conditions is Group C steels.

1-87. SAFETY FACTORS.

1-88. The factor of safety of pipe, tubing and fittings is the ratio of the ultimate strength of the material to the allowable stress. The term was originated for determining the allowable stress. The ultimate strength of a given material divided by an arbitrary factor of safety with allowances for the material and its usage, gives the allowable stress. In present design practice, it is customary to use allowable stress as specified by recognized authorities or building codes rather than this arbitrary factor of safety. It should be clearly understood that, even though each part of a system is designed with the same factor of safety, the system as a whole does not have that factor of safety. When one part is stressed beyond the proportional limit, or particularly the yield point, the load or stress distribution may be completely changed throughout the entire system or structure, and its ability to function may be changed though no part has ruptured.

1-89. The responsible engineer must determine the design safety factor upon consideration of whether personnel are exposed to injury and whether equipment is protected from explosion. In any case a minimum safety factor of 4 is necessary (unless otherwise specified in the codes or by cognizant engineering and safety personnel) when personnel are exposed. Yield strength, rather than ultimate strength, may be used to determine maximum allowable working pressure when authorized by cognizant engineering personnel. If yield strength exceeds 85 percent of ultimate strength, use ultimate strength. When yield strength is used, cognizant engineering and safety personnel shall determine the safety factor. The engineer bases his determination of safety on the following conditions:

a. Safety factor 4 - Mechanical shock not excessive.

b. Safety factor 6 - Considerable shock and mechanical strain.

c. Safety factor 8 - Hazardous application with severe service.

1-90. In airborne equipment where it is rarely possible to obtain a safety factor of 4, special precautions shall be observed in the vicinity of pressurized systems. This may be accomplished by providing protective barricades or keeping personnel at a specified safe distance.

1-91. PIPE.

1-92. PIPE DATA.

1-93. Pipe is specified by its nominal inside diameter (ID) through 12 inches and smaller. Nominal size refers to the approximate inside diameter of a schedule 40 (standard weight) pipe. The outside diameter (01) of any pipe size is the same for all weights in that size. That is, one-inch pipe would have a nominal (approximate) inside diameter of one-inch in schedule 40 only. Lighter and heavier weights of one-inch pipe of any wall thickness will fit the same one-inch pipe dies and fittings. Pipe 14 inches and larger is specified by the actual outside diameter.

1-94. Pipe thickness schedules have superseded the old designations of standard, extra-strong, and double extra-strong. (See figure 1-5.) In pipe 10 inches and smaller, standard weight is identical with schedule 40. In pipe eight inches and smaller, extra-strong is identical with schedule 80; schedule 160 is a little lighter than double extra-strong pipe. These new standards provide for thin-walled pipe, furnish intermediate weights for economy reasons, and provide standard dimensions for pipe sizes above 12 inches. These schedule numbers are an approximation of the following:

$$\text{Schedule} = 1{,}000 \times \frac{P}{S}$$

where:

P = service pressure, psig.
S = allowable fiber stress at 100°F (38°C), psi.

1-95. PRESSURE RATING OF PIPING.

1-96. There are several formulas used throughout industry to determine the maximum allowable working pressure of piping, and of these, the Lame' formula gives the most desirable results. Therefore, the Lame' formula has been included in this manual to aid personnel in determining the maximum allowable working pressures for piping. This formula is as follows:

$$P = \frac{S\,(D^2 - d^2)}{D^2 + d^2}$$

where:

P = maximum allowable working pressure, psig.
S = maximum allowable stress in material due to internal pressure, psi.
D = minimum outside diameter, inches.
d = maximum inside diameter, inches.

The maximum allowable stress in material, S, is determined by:

$$S = \frac{s}{F}$$

where:

s = ultimate strength or yield strength of the material as applicable, psi.
F = safety factor (paragraph 1-89).

NOTE

If yield strength (figure 1-6) exceeds 85 percent of ultimate strength, use ultimate strength.

The minimum outside diameter, D, is determined by:

$$D = Dn - 2C$$

where:

Dn = nominal outside diameter, inches.
C = depth of thread, groove, or other intentional reduction of outside diameter, inches.

The maximum inside diameter, d, is determined by one of the following:

d = Dn - 1.75 t (standard pipe schedule)
d = Dn - 1.90 t (red brass and copper pipe under 6 inches)
d = Dn - 1.87 t (red brass and copper pipe 6 to 8 inches)
d = Dn - 1.84 t (red brass and copper pipe over 8 inches)

where:

Dn = nominal outside diameter, inches.
t = nominal wall thickness, inches.

1-97. Maximum allowable working pressures may be calculated from the above formulas using values

NOMINAL PIPE SIZE	OUTSIDE DIAMETER	SCHEDULE 5		SCHEDULE 10		SCHEDULE 40		SCHEDULE 80		SCHEDULE 160		SCHEDULE XX	
		WALL THICKNESS	WEIGHT	WALL THICKNESS	WEIGHT	WALL THICKNESS	WEIGHT	WALL THICKNESS	WEIGHT	WALL THICKNESS	WEIGHT	WALL THICKNESS	WEIGHT
1/8	0.405	---	---	0.049	0.186	0.068	0.24	0.095	0.31	---	---	---	---
1/4	0.540	---	---	0.065	0.330	0.088	0.42	0.119	0.54	---	---	---	---
3/8	0.675	---	---	0.065	0.423	0.091	0.57	0.126	0.74	---	---	---	---
1/2	0.840	0.065		0.083	0.671	0.109	0.85	0.147	1.09	0.187	1.30	0.294	1.71
3/4	1.050	0.065	0.683	0.083	0.857	0.113	1.13	0.154	1.47	0.218	1.94	0.308	2.44
1	1.315	0.065	0.867	0.109	1.404	0.133	1.68	0.179	2.17	0.250	2.84	0.358	3.66
1-1/4	1.660	0.065	1.108	0.109	1.805	0.140	2.27	0.191	3.00	0.250	3.76	0.382	5.21
1-1/2	1.900	0.065	1.275	0.109	2.085	0.145	2.72	0.200	3.63	0.281	4.86	0.400	6.41
2	2.375	0.065	1.605	0.109	2.638	0.145	3.65	0.218	5.02	0.343	7.44	0.436	9.03
3	3.500	0.083	3.03	0.120	4.33	0.216	7.58	0.300	10.25	0.438	14.32	0.600	18.58
4	4.500	0.083	3.91	0.120	5.61	0.237	10.79	0.337	14.98	0.531	22.51	0.674	27.54
5	5.563	0.109	6.38	0.134	7.77	0.258	14.62	0.375	20.78	0.625	32.96	0.750	38.55
6	6.625	0.109	7.58	0.134	9.29	0.280	18.97	0.432	28.57	0.718	45.30	0.864	53.16
8	8.625	0.109	9.91	0.148	13.40	0.322	28.55	0.500	43.39	0.906	74.69	0.875	72.40
10	10.750	0.134	15.2	0.165	18.70	0.365	40.48	0.593	64.33	1.125	115.65	---	---
12	12.750	0.165	22.2	0.180	24.20	0.406	53.83	0.687	88.51	1.312	160.27	---	---
14	14.000	---	---	0.250	36.70	0.438	63.37	0.750	106.13	1.406	189.12	---	---
18	18.000	---	---	0.250	47.40	0.562	104.75	0.937	170.75	1.781	308.51	---	---
24	24.000	---	---	0.250	63.40	0.687	171.17	1.218	296.36	2.343	541.94	---	---

Listed schedules are not available in all materials.

Wall thickness - Nominal or average wall thickness in inches.

Weight - Weight in pounds per linear foot for steel pipe with plain ends. (Weights calculated on basis of 1 cu in. of steel - 0.2833 lb.)

(Per ASA B36.10 1950.)

(Applies also to black and galvanized iron, stainless steel, and aluminum pipe.)

Figure 1-5. Dimensions of Welded and Seamless Steel Pipe

in figure 1-5, for outside diameter and wall thickness and figure 1-6 for material strength; however, the major part of the computations has been performed for threaded and unthreaded pipe of standard schedule sizes, and is presented in figure 1-7.

NOTE

Since wall thickness for red brass and copper pipe differ from the standard pipe schedule, do not use the function K, in figure 1-7 when computing maximum allowable working pressures for red brass and copper pipe.

1-98. Figure 1-7 lists the pipe size function for each schedule and size of threaded and unthreaded pipe. This function, K, is given by the formula:

$$K = \frac{D^2 - d^2}{D^2 + d^2}$$

where D and d are the same as in paragraph 1-96. Thus, the maximum allowable pressure, P, is determined by:

$$P = \frac{sK}{F}$$

where s and F are the same as in paragraph 1-96, and K is given for each pipe size in figure 1-7.

1-99. The allowable pressure nomograph (figure 1-8) may be used to determine the maximum allowable working pressure for any piping. First determine the minimum outside diameter, D, the maximum inside diameter, d, and the allowable stress, S, as described in paragraph 1-96. Draw a straight line from the value of D on the OUTSIDE DIAMETER scale to the value of d on the INSIDE DIAMETER scale. This line will cross the pivot line. Draw a straight line from the point at which the line crosses the pivot line to the value of S on the ALLOWABLE STRESS scale. This line will cross the MAXIMUM WORKING PRESSURE scale at the desired value of maximum working pressure. For pipes larger than 1.4-inch diameter, multiply the values on both the OUTSIDE DIAMETER and INSIDE DIAMETER scales by 2,5,10, or any appropriate number. For pressures greater or smaller than indicated on the ALLOWABLE STRESS and MAXIMUM WORKING PRESSURES scales, multiply the values on both scales by 1/2,1/10, 2, 5, 10, or any appropriate number.

1-100. AUSTENITIC STAINLESS STEELS. These stainless steels, identified by their resistance to corrosion, their capacity to withstand high temperatures, and their ability to retain ductility at low temperature, afford some of the best high-strength materials for piping installations. The reduction of ability to resist corrosion which occurs in these steels during welding is offset by the addition of stabilizing elements, titanium and

MATERIAL	ULTIMATE STRENGTH (psi)	YIELD STRENGTH (psi)	PERCENT YIELD OF ULTIMATE	MAXIMUM ALLOWABLE STRESS (psi)
Stainless steel, ASTM A-312, seamless grade TP304, 321, and 347.	75,000	30,000	40	18,750
Carbon steel, ASTM A-53, A-135, and A-139:				
Grade A	48,000	30,000	62.5	12,000
Grade B	60,000	35,000	58.5	15,000
Aluminum alloys:				
5454.0 or H112 temper	31,000	12,000	38.5	7,750
5456. 0 or H112 temper	42,000	19,000	45	10,500
6061, T6 temper:				
Pipe size less than 1 in.	42,000	35,000	83.5	10,500
Pipe size 1 in. or larger	38,000	35,000	92	9,5000
6062. T6 temper:				
Pipe size less than 1 in.	42,000	35,000	83.5	10,500
Pipe size 1 in. or greater	38,000	35,000	92	9,500

Figure 1-6. Material Strength at 100°F (38°C) (Sheet 1 of 2)

MATERIAL	ULTIMATE STRENGTH (psi)	YIELD STRENGTH (psi)	PERCENT YIELD OF ULTIMATE	MAXIMUM ALLOWABLE STRESS (psi)
Aluminum alloys: (Cont)				
6063:				
T5 temper:				
Wall thickness 0.5 in. or less	22,000	16,000	73	5,500
Wall thickness between 0.501 and 1 in.	21,000	15,000	71.5	5,250
T6 temper	30,000	25,000	83.5	7,500
6351, T6 temper	42,000	37,000	88	10,500
Copper, ASTM B-42:				
Pipe size 1/8 to 2 in.	45,000	40,000	89	11,250
Pipe size 2-1/2 to 12 in.	36,000	30,000	83.5	9,000
Brass, ASTM B-43	40,000	12,000	30	10,000

NOTE: Maximum allowable stress is figured with a safety factor of 4, using ultimate strength.

Figure 1-6. Material Strength at 100°F (38°C) (Sheet 2 of 2)

THREADED PIPE						
NOMINAL PIPE SIZE	SCHEDULE 5	SCHEDULE 10	SCHEDULE 40	SCHEDULE 80	SCHEDULE 160	SCHEDULE XX
1/8		0.7956	0.1874	0.3543		
1/4		0.05662	0.1546	0.2980		
3/8		0.04331	0.1272	0.2490		
1/2		0.04358	0.1109	0.2086	0.3341	0.6650
3/4		0.03365	0.09316	0.1794	0.3242	0.5406
1		0.04485	0.08277	0.1589	0.2846	0.4894
1-1/4		0.03451	0.07202	0.1364	0.2150	0.4035
1-1/2		0.02974	0.06720	0.1269	0.2218	0.3657
2		0.02345	0.05257	0.1142	0.2269	0.3160
3		0.003035	0.05539	0.1033	0.1861	0.2893
4		0.002328	0.05119	0.09473	0.1837	0.2529
5		0.006454	0.05784	0.08868	0.1837	0.2284
6		0.005384	0.04615	0.09017	0.1777	0.2245

Figure 1-7. Pipe Size Function (Sheet 1 of 2)

THREADED PIPE (Cont)						
NOMINAL PIPE SIZE	SCHEDULE 5	SCHEDULE 10	SCHEDULE 40	SCHEDULE 80	SCHEDULE 160	SCHEDULE XX
8		0.007027	0.04408	0.08332	0.1778	0.1703
10		0.008448	0.04245	0.08255	0.1815	
12		0.009205	0.04150	0.08304	0.1807	
14		0.01736	0.04189	0.08385	0.1770	
18		0.01343	0.04498	0.08414	0.1771	
24		0.01003	0.03506	0.08444	0.1771	
UNTHREADED PIPE						
1/8		0.2335	0.3345	0.4824		
1/4		0.2322	0.3237	0.4520		
3/8		0.1825	0.2627	0.3761		
1/2	0.1445	0.1867	0.2520	0.3434	0.4571	0.7389
3/4	0.1142	0.1478	0.2057	0.2882	0.4231	0.6170
1	0.09022	0.1554	0.1922	0.2656	0.3838	0.5679
1-1/4	0.07087	0.1215	0.1583	0.2211	0.2967	0.4741
1-1/2	0.06166	0.1054	0.1424	0.1698	0.2907	0.4297
2	0.04904	0.08353	0.1125	0.1733	0.2834	0.3692
3	0.04236	0.06180	0.1138	0.1611	0.2423	0.3423
4	0.03280	0.04775	0.09639	0.1396	0.2273	0.2949
5	0.03487	0.04304	0.09424	0.1249	0.2155	0.2628
6	0.02921	0.03602	0.07676	0.1206	0.2073	0.2535
8	0.02236	0.03048	0.06746	0.1066	0.2004	0.1930
10	0.02205	0.02722	0.06118	0.1012	0.1996	
12	0.02290	0.02501	0.05728	0.09872	0.1960	
14		0.03174	0.05625	0.09812	0.1909	
18		0.02460	0.05613	0.09523	0.1879	
24		0.01840	0.04341	0.09274	0.1852	

Figure 1-7. Pipe Size Function (Sheet 2 of 2)

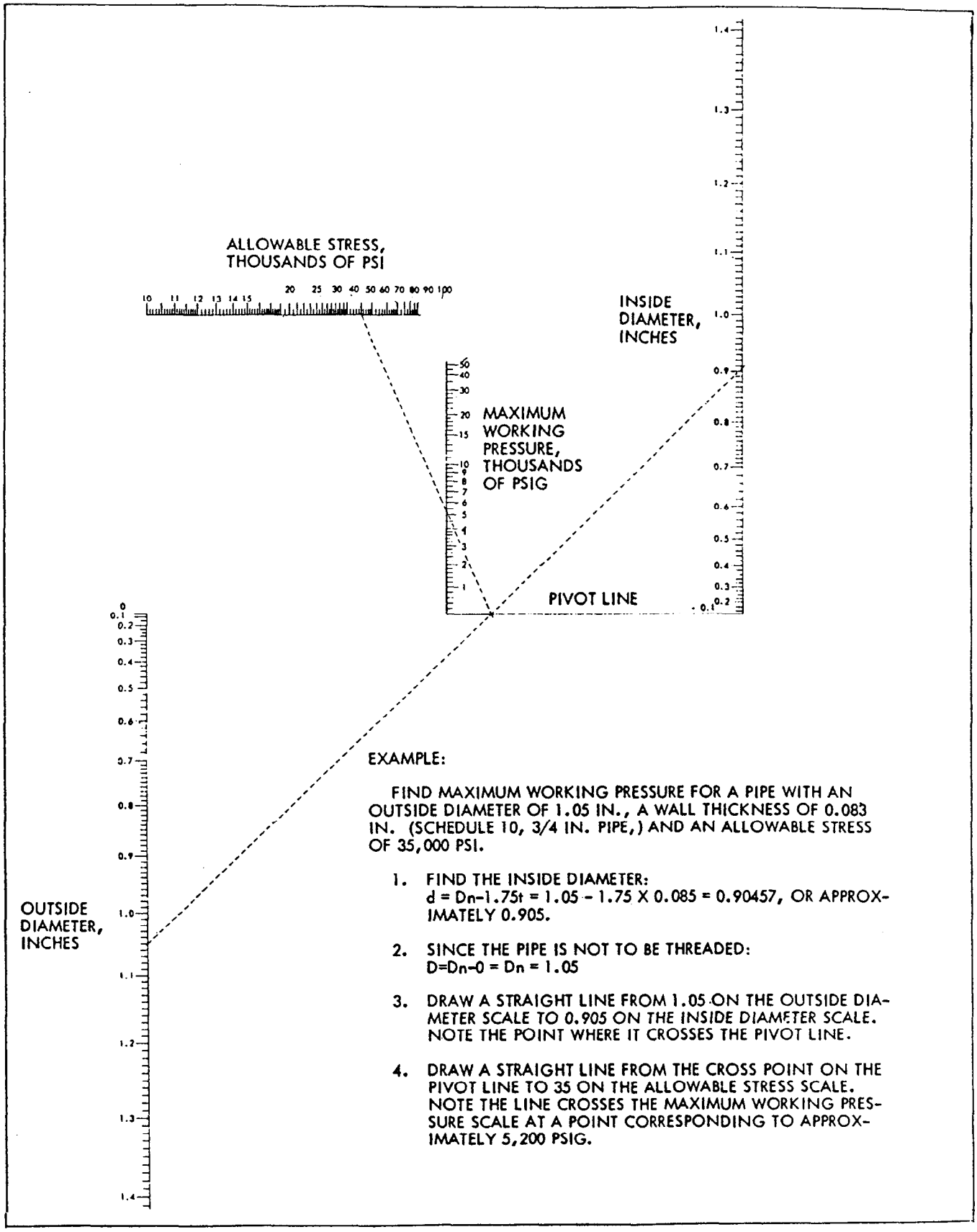

Figure 1-8. Maximum Allowable Working Pressure Nomograph

NOMINAL PIPE SIZE	PIPE SCHEDULE NUMBER AND MAXIMUM ALLOWABLE WORKING PRESSURE (PSIA)					
	5	10	40	80	160	XX
1/2	2,709	3,500	4,725	6,439	8,570	13,854
3/4	2,141	2,771	3,857	5,404	7,933	11,569
1	1,692	2,914	3,604	4,980	7,196	10.648
1-1/4	1,329	2,278	2,968	4,146	5,563	8,889
1-1/2	1,156	1,976	2,670	3,184	5,451	8,057
2	919	1,566	2,109	3,249	5,314	6,923
3	794	1,159	2,134	3,021	4,543	6,418
4	615	895	1,807	2,618	4,262	5,529
5	653	807	1,767	2,342	4,041	4,928
6	547	675	1,439	2,261	3,887	4,753
8	419	571	1,264	1,999	3,758	3,619
10	413	510	1,147	1,898	3,743	
12	429	469	1,074	1,851	3,675	
ASTM A-312 seamless grade TP304, 321 and 347 Maximum allowable stress is 18,750 psi at 100°F (38°C), safety factor is 4						

Figure 1-9. Maximum Allowable Working Pressures for Unthreaded Stainless Steel Pipe

NOMINAL PIPE SIZE	PIPE SCHEDULE NUMBER AND MAXIMUM ALLOWABLE WORKING PRESURE (PSIA)											
	5		10		40		80		160		XX	
	A	B	A	B	A	B	A	B	A	B	A	B
1/2	1,734	2,188	2,240	2,801	3,024	3,780	4,121	5,151	5,485	6,857	8,867	11,084
3/4	1,370	1,713	1,774	2,217	2,468	3,086	3,458	4,323	5,077	6,347	7,404	9,255
1	1,083	1,353	1,864	2,331	2,306	2,883	3,187	3,984	4,606	5,757	6,815	8,519
1-1/4	850	1,063	1,458	1,823	1,900	2,375	2,653	3,317	3,560	4,451	5,689	7,112
1-1/2	740	924	1,265	1,581	1,709	2,136	2,038	2,547	3,488	4,361	5,156	6,446
2	589	736	1,002	1,253	1,350	1,688	2,080	2,600	3,401	4,251	4,430	5,538
3	508	635	742	927	1,365	1,707	1,933	2,417	2,908	3,635	4,108	5,135
4	394	492	573	716	1,157	1,446	1,675	2,054	2,728	3,410	3,539	4,424
5	418	523	516	645	1,131	1,414	1,499	1,874	2,586	3,233	3,154	3,942
6	350	438	432	540	921	1,151	1,447	1,809	2,488	3,110	3,028	3,803

Figure 1-10. Maximum Allowable Working Pressures for Unthreaded Carbon Steel Pipe (Sheet 1 of 2)

NOMINAL PIPE SIZE	PIPE SCHEDULE NUMBER AND MAXIMUM ALLOWABLE WORKING PRESURE (PSIA)											
	5		10		40		80		160		XX	
	A	B	A	B	A	B	A	B	A	B	A	B
8	268	335	365	457	810	1,011	1,279	1,599	2,405	3,006	2,316	2,895
10	265	331	327	408	734	917	1,214	1,518	2,395	2,994		
12	274	344	300	375	687	859	1,185	1,481	2,352	2,940		

ASTM A-53, A-135, and A-139

Maximum allowable stress is 12,000 psi for grade A and 15,000 psi for grad B at 100°F (38°C)

Safety factor is 4

Figure 1-10. Maximum Allowable Working Pressures for Unthreaded Carbon Steel Pipe (Sheet 2 of 2)

NOMINAL PIPE SIZE	PIPE SCHEDULE NUMBER AND MAXIMUM ALLOWABLE WORKING PRESSURE (PSIA)					
	5	10	40	80	160	XX
1/2	1,517	1,960	2,646	3,606	4,800	7,758
3/4	1,199	1,552	2,160	3,026	4,443	6,479
1	857	1,476	1,825	2,523	3,646	5,395
1-1/4	673	1,154	1,504	2,100	2,819	4,504
1-1/2	586	1,001	1,353	1,613	2,762	4,082
2	466	793	1,069	1,646	2,692	3,507
3	402	587	1,081	1,530	2,302	3,252
4	311	454	916	1,326	2,159	2,802
5	331	409	895	1,187	2,047	2,497
6	277	342	729	1,146	1,969	2,408
8	212	289	640	1,013	1,904	1,834
10	209	259	581	961	1,896	
12	217	237	544	937	1,862	

Type 6061, temper T6

Maximum allowable stress if 9,500 psi for 1 inch or greater and 10.500 psi for less than 1 inch at 100°F (38°C)

Safety factor is 4

Figure 1-11. Maximum Allowable Working Pressures for Unthreaded Type 6061-T6 Aluminum Alloy Pipe

NOMINAL PIPE SIZE	MAXIMUM ALLOWABLE WORKING PRESSURE (PSIA)			
	STANDARD PIPE		EXTRA-STRONG PIPE	
	RED BRASS	COPPER	RED BRASS	COPPER
1/2	2,705	3,043	3,894	4,381
3/4	2,270	2,554	3,223	3,626
1	1,983	2,231	2,960	3,330
1-1/4	1,808	2,034	2,459	2,766
1-1/2	1,611	1,812	2,231	2,510
2	1,325	1,491	1,872	2,106
3	1,259	1,133	1,784	1,606
4	1,111	1,000	1,542	1,388
5	890	801	1,362	1,256
6	726	653	1,301	1,171
8	695	626	1,136	1,022
10	644	580	889	800
12	556	500		

ASTM B-42 and B-43

Maximum Allowable Stress: red brass is 10,000 psi; copper is 11,250 psi for 2 inch and less and 9,000 psi for greater than 2 inch at 100°F (38°C)

Safety factor is 4

Figure 1-12. Maximum Allowable Working Pressures for Unthreaded Red Brass and Copper Pipe

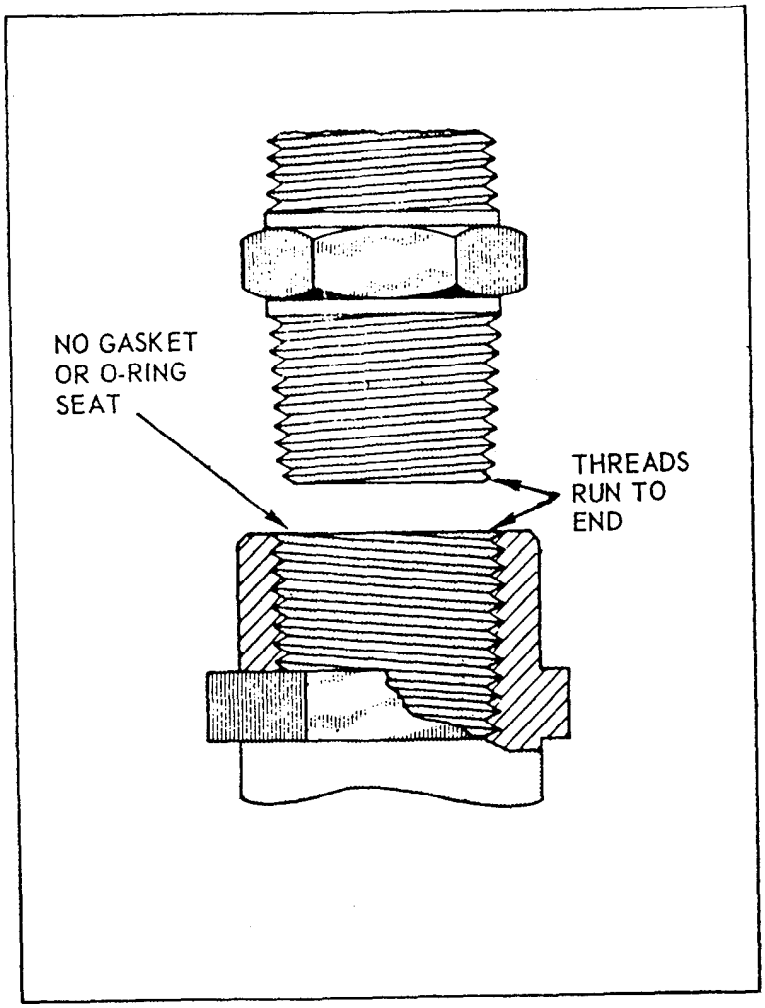

Nominal Pipe Size, Inches	1/8	1/4	3/8	1/2	3/4	1	1-1/4	1-1/2	2	2-1/2 Thru 12
Threads Per Inch	27	18	18	14	14	11-1/2	11-1/2	11-1/2	11-1/2	8

Figure 1-13. National Taper Pipe Thread

columbium. Austenitic stainless steels are used extensively in pipe lines for corrosive fluids, as these materials are compatible with a multiplicity of service fluid combinations. The effect of low temperatures on tensile strength and yield point are worthy of mention. Tensile strength values at -300°F (-186%) are increased approximately 50 percent over those at 100° F (38°).. However, the ductility decreases at -300°F (-186°C) temperatures. Ductility decrease is less for stainless steel than for other steels. A complete coverage of stainless steels at low temperatures is given in the National Bureau of Standards - Cryogenic Materials Data Handbook. Refer to figure 1-9 for maximum allowable working pressures at 100° F (38°C) for unthreaded stainless steel pipe.

1-101. CARBON STEELS. The seamless and electric resistance welded types of pipe are most commonly used of this rather large group of steels. ASTM (American Society for Testing Materials) A-53 Grades A and B and ASTM A-106 Grades A and B steels are used for general service pipe. Carbon steels are utilized for structural elements, and for gas (with the exception of oxygen), air, and water systems. Grade B steels, as a result of heat treatment, are stronger than Grade A. Refer to figure 1-10 for maximum allowable working pressures at 100° F (38°C) for unthreaded carbon steel pipe.

1-102. Carbon or alloy steel pipe with electrolytic deposited inner liner with a maximum thickness of 0.015 inch is approved for use in welded systems where the system media is compatible with nickel.

1-103. Carbon or alloy fittings with electrolytic deposited nickel inner liner with a minimum thickness of 0.015 inch are approved where the system media is compatible with nickel.

1-104. ALUMINUM ALLOYS. For piping installations an aluminum alloy of excellent welding characteristics and moderate tensile strength is 6061-T6. At 400° F (206° C) the tensile strength of this alloy is 19,000 psi, at 100° F (38°C) it is 42,000 psi, and at -320° F (-197° C) it is 61,000 psi. Refer to figure 1-11 for maximum allowable working pressures at 100° F (38°C) for type 6061-T6 aluminum alloy pipe.

1-105. RED BRASS AND COPPER. When standard size red brass and copper pipe is used, it shall conform to ASTM B-43 and ASTM B-42, with tensile strengths of 40,000 psi for red brass and 36,000 and 45,000 psi for copper at 100° F (38°C). Refer to figure 1-12 for maximum allowable working pressures at 100° F (38°C) for red brass and copper pipe.

1-106. PIPE THREADS.

1-107. GENERAL. The most commonly used pipe thread in this country is the American Standard Taper Pipe Thread described in NBS Handbook H-23. This thread is also known as the national taper pipe thread (npt).

1-108. A variation of the npt thread is the Dryseal thread used on pipe-threaded AN parts. These threads are completely interchangeable and will mate without interference. Dryseal pipe threads permit less leakage than npt threads. However, either can be made to seal with the other. A sealing compound must be used when either of the threads is not Dryseal.

1-109. The Dryseal American Standard Taper (nptf) thread differs from the npt by differences in the truncation of the root and crests of the threads. There is an interference condition of the root and crest of the thread before the flanks of the thread engage. This interference in the Dryseal thread ensures that no spiral leakage, such as normally occurs in the npt thread, can result. This interference also eliminates the need to use thread lubricant or pipe thread sealer to seal against spiral leakage. Although some users consider it good practice to use a light oil lubricant to prevent galling of pipe threads, a sealer is not necessary. Generally, the use of pipe-threaded joints (npt) should be avoided unless specified. Figure 1-13 illustrates the npt-type thread and the standard threads per inch for the various nominal pipe sizes.

1-110. Some fire extinguisher systems use, in addition to the npt on the 1-inch pipe, a Pacific Coast thread on 1-1/2-inch fog nozzles, and a Fire Department National Standard thread on larger lines. The Pacific Coast and the Fire Department National Standard threads are straight

threads and require a rubber gasket for sealing. Care must be exercised to prevent mismatching of pipe threads.

1-111. NORMAL THREAD ENGAGEMENT. The normal engagement specified for national taper pipe thread and American Petroleum Institute (API) line pipe thread joints is based on parts being threaded to the npt standard or the API standard for line pipe threads. The shoulder-type drainage fitting thread engagement is based on using Crane fittings and npt thread dimensions on the external thread but holding the external thread to a special tolerance. (See figure 1-14.)

1-112. TUBING.

1-113. TUBE DATA.

1-114. The outside diameter (OD) is the basis for measurement in the majority of cases. The notable exceptions are naval piping, where tubing is based on the standard pipe OD, and refrigeration systems, where tubing is based on standard ID dimensions.

1-115. Seamless metal tubing is widely used in high-pressure systems for propellant, coolant oil, pressurization, instrumentation, hydraulic, and vent lines, and also for electrical conduits and ventilating ducts. Tubing of copper, corrosion-resistant steel (stainless steel), and aluminum alloy material is used. The basic tube material may be identified by either visual inspection or, as in the case of the aluminum alloys, the actual designation may be stamped on the surface of the tubing.

1-116. While it is difficult to generalize, copper has been superseded as a general-purpose material by aluminum alloys because of its lighter weight, work ability, and resistance to corrosion and fatigue.

1-117. STANDARD TUBING.

1-118. The wall sections of standard tubing are very thin in comparison to standard pipe, and methods other than threading and heavy flanges must be utilized to connect tubing sections into a system. Nominal tubing wall thickness is listed in figure 1-15. It must be emphasized, however, that these wall thicknesses are not available in all materials.

1-119. Common methods of connection include flaring and attaching with swivel nuts, brazing or welding, and flareless tube ends attached with compression fittings. With these various methods of connection, a standard tube OD is required to enable standardization of fitting sizes.

1-120. ALUMINUM ALLOY TUBING. Types 110 and 3003 tubing are used for general-purpose lines and conduits of low or negligible fluid pressures, such as instrument lines, electrical conduits, and ventilating ducts.

1-121. Types 6061 and 6062 aluminum alloy tubing, Specification MIL-T-7081, are also used in both thin and thick walls on aircraft.

1-122. Type 5052 tubing, Federal Specification WW-T-787, is the most widely used for general-purpose lines of low and medium pressures up to 3,000 psig. This tubing is easily flared and is soft enough to be easily formed by handtools and must be handled with care to prevent scratches, dents, and nicks. It is used with either of two types of end fittings: the flared end for mechanical connectors, or the beaded end for use with clamps and flexible hose connectors.

1-123. Type 5052 tubing can be used in gaseous or liquid systems containing service fluids compatible with aluminum alloys. When used in liquid systems, 1-1/2-inch diameter shall be maximum size used.

1-124. Aluminum alloy tubing must be corrosion protected by treating with chemical film in accordance with Specification MIL-C-5541, wash primed to Specification MIL-C-8514, and painted with zinc chromate paint conforming to Specification MIL-P-8585 or MIL-P-7962, when used in exposed areas such as wheel wells, missile bays, etc, and at geographical locations where extreme humid and salt air conditions are present.

1-125. CORROSION-RESISTANT STEEL TUBING. This tubing (18 Cr-Ni) is extensively used in high-pressure fluid systems above 1,500 psig. When Specifications MIL-T-8808 (AISI 321 and

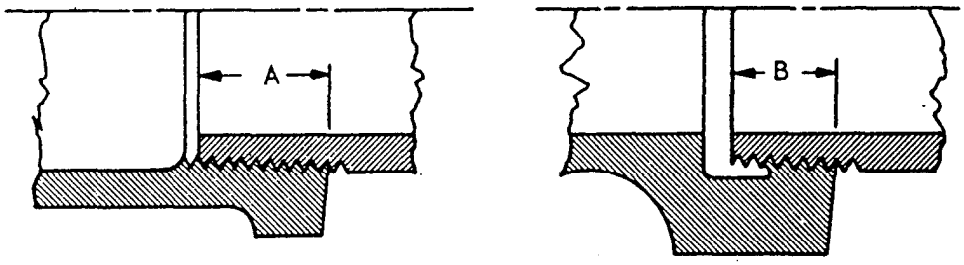

NPT AND API LINE PIPE THREADS

SHOULDER TYPE DRAINAGE FITTING THREADS

Dimensions	Pipe Sizes (ID) 1/8	1/4	3/8	1/2	3/4	1	1-1/4	1-1/2	2	
A	1/4	3/8	3/8	1/2	9-16	11/16	11-16	11/16	3/4	
B	-	-	-	-	-	9/16	5/8	5/8	5/8	
Dimensions	2-1/2	3	3-1/2	4	5	6	8	10	12	14
A	15/16	1	1-1/16	1-1/8	1-1/4	1-5/16	1-7/16	1-5/8	1-3/4	
B	7/8	15/16	1	1-1/16	1	1-1/4	1-3/8	1-9/16	1-11/16	1-7/8

NOTE

Use American Standard Taper Male Thread with shoulder type drainage fittings. The external thread, however, should not be threaded small to gauge nor more than one turn large.

Figure 1-14. Normal Thread Engagement

NOMINAL TUBE OD (INCHES)	TOLERANCE OD (0.001 INCH)	NOMINAL WALL THICKNESS (0.001-INCH)	WALL THICKNESS TOLERANCE (PERCENT)
1/8	±4	16 18 20	±15
3/16	±4	16 18 20	±15
1/4	±4	20 22 25 28 32 35 42	±15
5/16	±4	25 28 32 35 42 49	±15
3/8	±4	28 32 35 42 49 58	±15
1/2	±5	32 35 42 49 58 65	±10
5/8	±5	35 42 49 58 65 72 83	±10
3/4	±5	42 49 58 65 72 83 95	±10
1	±5	49 58 65 72 83 95 109	±10
1-1/4	±5	49 58 65 72 83 95 109 120	±10
1-1/2	±10	58 65 72 83 95 109 120	±10
1-3/4	±10	65 72 83 95 109 120	±10
2	±10	72 83 95 109 120	±10

Listed thicknesses are not available in all materials.

Figure 1-15. Standard Tubing Wall Thickness

347) and MIL-T-6845 quarter-hard tubing are not available, use Specification MIL-T-8506 (AISI 304) tubing, annealed or quarter-hard.

1-126. AN818 steel nuts should be used on such lines and for general corrosion protection, which is improved by the use of similar contacting materials. The corrosion-resistant tubings do not have to be annealed for flaring or forming; in fact, the flared section is somewhat strengthened by the cold-working and consequent strain-hardening. Its higher tensile strength allow the use of thinner walls and, consequently, the weight is comparable to the thicker walled aluminum alloy tubing.

1-127. Corrosion-resistant steel tubing can be used in gaseous or liquid systems containing service fluids compatible with these steels and when working pressures exceed the maximum allowable working pressure of aluminum alloy tubing which is 3,000 psi.

1-128. A maximum size of two inches diameter shall be used. Over two inches diameter, or if greater wall thickness is required, pipe, corrosion-resistant, schedules 5 to XX, will be used.

1-129. Corrosion-resistant steel tubing shall be used in lieu of aluminum alloy tubing whenever the line system is subject to vibration, extremely hazardous service fluids, and corrosive vapors in containers filled with corrosive active liquid, and/or when tubes are part of the structure required to support or carry the stress and load of the assembly.

1-130. Fuming nitric acid will require the use of Specification MIL-T-8808 (AISI 347) tubing, which has stabilizing properties of columbium or columbium plus tantalum.

1-131. Stainless steel fittings shall be used with stainless steel tubing to prevent electrolytic action of dissimilar materials and to maintain a

high-pressure safety factor of 4, with assembly of the line plumbing system. Fittings as listed in Standard AND 10059 shall all be stainless steel materials.

1-132. Corrosion-resistant steel tubing and precision flared corrosion-resistant steel fittings shall be used in pressure systems with pressure of 3,000 to 6,000 psig.

1-133. COPPER TUBING, SEAMLESS. This tubing is used for general-purpose lines of low or negligible fluid pressures such as fuel servicing lines, water, water heater coils, radiation cooling coil, condenser tubes, oil, and underground water lines. Copper tubing has a tensile strength for annealed type of 30,000 psi and for hard-drawn type of 40,000 psi. Copper tubing will only be used with fluids which are noncorrosive to copper material.

1-134. Annealed type N tubing, Federal Specification WW-T-799A, is the most commonly used type in the Air Force. It is used for tubes requiring flared-type fittings of the standard AN819 sleeve and AN818 nut, or used for beaded-type hose connections. The tube size is the actual tube outside diameter. The maximum allowable tube OD is two inches diameter. If larger diameters are required, use type K, L, or M with soldered joints, or use Federal Specification WW-T-797A, which is used with iron pipe size tubing (ips) flange fittings.

1-135. Type K tubing, Federal Specification WW-T-799A, is used with soldered-joint fittings or connections. Type K has the heaviest wall thickness of the types K,L,M, and N series. It is normally used in large tube diameters for requirements of heavy volume flow of liquid fluids and is also used for underground plumbing. The nominal tube size has larger actual tube outside diameter than the stated nominal size (nominal tube size of one inch is actual tube OD of 1.125, etc) and, also, the nominal tube size is smaller than the standard steel pipe OD. This type comes in annealed or hard-drawn conditions.

1-136. Type L tubing, Federal Specification WW-T-799A, is used with soldered-joint fittings, or connections. Type L has tube wall thickness less than the thickest type K and greater than the thinnest type M. It is used for general plumbing. This type comes in annealed or hard-drawn conditions.

1-137. Type M tubing, Federal Specification WW-T-799A, is used only with soldered-joint fittings or connections. It is supplied only in hard-drawn conditions.

1-138. SUPERPRESSURE TUBING.

1-139. The requirement for high-pressure gaseous supply and storage facilities necessitates the use of superpressure tubing and hardware. Several suppliers have hardware and tubing hardware. Several suppliers have hardware and tubing materials that provide efficient and safe systems needed to handle the high pressures involved.

1-140. Superpressure tubing is heavy walled in comparison to standard tubing, and, therefore, can be threaded. A union-type connection is utilized to effect the seal. Superpressure tubing is available in chrome molybdenum steel in the normalized condition and 304 stainless steel quarter-hard. The tubing sizes readily available from suppliers are listed in figure 1-16. Larger sizes may be supplied on special request.

1-141. PRESSURE RATING OF TUBING.

1-142. The formula generally accepted for establishing pressure rating or wall thickness of tubing, as required, is as follows:

$$P = \frac{2ft}{DS} \qquad \text{or } t = \frac{PDS}{2f}$$

where:

P = maximum allowable working pressure, psig.
f = minimum tensile strength, psi (figure 1-17).
t = wall thickness, inches.
D = tube outside diameter, inches.
s = safety factor.

1-143. STANDARD TUBING. The approximate pressure ratings of tubing of various materials, sizes, and thicknesses are listed in figures 1-18 through 1-22.

1-144. SUPERPRESSURE TUBING. The recommended allowable working pressures for superpressure tubing in the materials available are listed in figure 1-23.

1-145. PIPE FITTINGS.

OUTSIDE DIAMETER (INCH)	INSIDE DIAMETER (INCH)	MATERIAL
1/4	1/16	Chrome molybdenum
1/4	3/32	304 stainless
3/8	1/8	304 stainless
9/16	3/16	Chrome molybdenum
9/16	5/16	304 stainless

Figure 1-16. Superpressure Tubing Wall Thickness

TUBE MATERIAL	MINIMUM TENSILE STRENGTH
Aluminum alloy	29,000 psi
Copper, annealed	30,000 psi
Copper, hard-drawn	45,000 psi
Stainless steel, annealed	75,000 psi
Stainless steel, 1/4-hard	120,000 psi

Figure 1-17. Minimum Tensile Strength For Tubing

SPECIFICATION
MIL-T-8504,
MIL-T-8506,
MIL-T-8606, AND
MIL-T-8808

NOMINAL TUBE OD	WALL THICKNESS								
	0.028	0.035	0.049	0.058	0.065	0.083	0.095	0.120	0.134
3/16	5,600	7,000	9,800						
1/4	4,200	5,250	7,350	8,700	9,750				
5/16	3,360	4,200	5,880	6,960	7,800				
3/8	2,800	3,500	4,900	5,800	6,500				
1/2	2,100	2,625	3,675	4,350	4,875	6,255	7,125	9,000	10,050
5/8	1,680	2,100	2,940	3,480	3,900	4,980	5,700	7,200	8,040
3/4	1,400	1,750	2,450	2,900	3,250	4,150	4,750	6,000	6,700
1		1,312	1,837	2,175	2,437	3,112	3,562	4,500	
1-1/8	933	1,167	1,633	1,933	2,167	2,767	3,167	4,000	
1-1/4		1,050	1,470	1,740	1,950		2,850	3,600	4,020
1-3/8		954	1,336	1,581	1,772	2,663	2,590	3,273	
1-1/2		875	1,225	1,450	1,625	2,075	2,375	3,000	
2		656	918	1,087	1,218	1,556	1,781	2,250	2,512

All dimensions in inches. All pressures in psig.

Figure 1-18. Maximum Allowable Working Pressures, Annealed Stainless Steel Tubing

SPECIFICATION MIL-T-6845									
NOMINAL TUBE OD	WALL THICKNESS								
	0.028	0.035	0.049	0.058	0.065	0.083	0.095	0.120	0.134
3/16	8,960	11,200	15,683						
1/4	6,720	8,400	11,760	13,920	15,600				
5/16	5,376	6,720	9,408	11,136	12,480				
3/8	4,480	5,600	7,841	9,280	10,400	13,280	15,200	17,200	
1/2	3,360	4,200	5,880	6,960	7,800	9,960	11,400	14,400	16,000
5/8	2,688	3,360	4,704	5,568	6,240	7,952	9,104	11,504	12,864
3/4	2,240	2,800	3,920	4,640	5,200	6,640	7,600	9,600	10,720
1		2,100	2,940	3,480	3,900	4,980	5,700	7,200	
1-1/8	1,493	1,867	2,613	3,093	3,467	4,426	5,067	6,400	
1-1/4		1,680	2,852	2,784	3,120	3,976	4,552	5,752	6,432
1-3/8		1,529	2,138	2,530	2,836	3,549	4,145	5,236	
1-1/2		1,400	1,960	2,320	2,600	3,320	3,800	4,800	
2		1,050	1,470	1,740	1,950	2,490	2,850	3,600	4,020
All dimensions in inches. All pressures in psig.									

Figure 1-19. Maximum Allowable Working Pressures, 1/8-Hard Stainless Steel Tubing

FEDERAL SPECIFICATION WW-T-787						
NOMINAL TUBE OD	WALL THICKNESS					
	0.028	0.035	0.042	0.049	0.058	0.065
1/8		4,060				
3/16		2,707				
1/4	1,624	2,030		2,842		
5/16		1,624				
3/8	1,083	1,380	1,624	1,894		
1/2	812	1,015	1,218	1,421	1,682	1,885
5/8		812	974	1,137		1,508
3/4	541	690		947		1,257
1		507		710		942
1-1/4		406		568		754
1-1/2				474		628
1-3/4		290		406		
2		254		355		471
2-1/2		203				377
3				237		314
All dimensions in inches. All pressures in psig.						

Figure 1-20. Maximum Allowable Working Pressures, 5052 Aluminum Alloy Tubing

FEDERAL SPECIFICATION WW-T-787						
		WALL THICKNESS				
NOMINAL TUBE OD	ACTUAL TUBE OD	0.032	0.035	0.042	0.049	0.065
1/8	0.125	3,840	4,200	5,040	5,880	
3/16	0.188	2,553	2,792	3,350	3,880	
1/4	0.250	1,920	2,100	2,520	2,940	3,900
5/16	0.313	1,533	1,677	2,012	2,348	3,115
3/8	0.375	1,280	1,400	1,680	1,960	2,600
7/16	0.438	1,095	1,198	1,438	1,678	2,226
1/2	0.500	960	1,050	1,260	1,470	1,950
9/16	0.562	954	934	1,120	1,307	1,748
5/8	0.625	768	840	1,008	1,176	1,560
3/4	0.750	640	700	840	980	1,300
7/8	0.875	548	600	720	840	1,114
1	1.000	480	525	630	735	975
1-1/8	1.125	426	466	561	653	866
1-3/16	1.188	404	441	530	618	820
1-1/4	1.250	384	420	504	588	780
1-3/8	1.375	349	381	458	534	709
1-1/2	1.500	320	350	420	490	650
1-3/4	1.750	274	300	360	420	557
2	2.000	240	255	315	367	487
All dimensions in inches. All pressures in psig.						

Figure 1-21. Maximum Allowable Working Pressures, Type N Copper Tubing

FEDERAL SPECIFICATION WW-T-799A AND ASTM B-88-58							
		TYPE K ANNEALED OR HARD-DRAWN		TYPE L ANNEALED OR HARD-DRAWN		TYPE M HARD-DRAWN ONLY	
NOMINAL TUBE OD	ACTUAL TUBE OD	WALL THICKNESS	MAXIMUM WORKING PRESSURE	WALL THICKNESS	MAXIMUM WORKING PRESSURE	WALL THICKNESS	MAXIMUM WORKING PRESSURE
1/8	0.250	0.032	1,920	0.025	1,500	0.025	2,000
1/4	0.375	0.032	1,280	0.030	1,200	0.025	1,333
3/8	0.500	0.049	1,470	0.035	1,050	0.025	1,000
1/2	0.625	0.049	1,176	0.040	960	0.028	896
5/8	0.750	0.049	908	0.042	840	0.030	800
3/4	0.875	0.065	1,114	0.045	800	0.032	731

Figure 1-22. Maximum Allowable Working Pressures, Copper Tubing (Sheet 1 of 2)

FEDERAL SPECIFICATION
WW-T-799A AND
ASTM B-88-58

NOMINAL TUBE OD	ACTUAL TUBE OD	TYPE K ANNEALED OR HARD-DRAWN		TYPE L ANNEALED OR HARD-DRAWN		TYPE M HARD-DRAWN ONLY	
		WALL THICKNESS	MAXIMUM WORKING PRESSURE	WALL THICKNESS	MAXIMUM WORKING PRESSURE	WALL THICKNESS	MAXIMUM WORKING PRESSURE
1	1.125	0.065	866	0.050	666	0.035	622
1-1/4	1.375	0.065	709	0.055	600	0.042	611
1-1/2	1.625	0.072	664	0.060	553	0.049	603
2	2.125	0.083	585	0.070	494	0.058	545
2-1/2	2.625	0.095	542	0.080	457	0.065	495
3	3.125	0.109	523	0.090	432	0.072	460
3-1/2	3.625	0.120	496	0.100	413	0.083	457
4	4.125	0.134	487	0.110	400	0.095	460
5	5.125	0.160	468	0.125	365	0.109	425
6	6.125	0.192	470	0.140	342	0.122	398
8	8.125	0.271	500	0.200	369	0.170	418
10	10.125	0.338	500	0.250	370	0.212	418
12	12.125	0.405	501	0.280	346	0.254	418

All dimensions in inches. All pressures in psig.

Figure 1-22. Maximum Allowable Working Pressures, Copper Tubing (Sheet 2 of 2)

OUTSIDE DIAMETER (INCH)	INSIDE DIAMETER (INCH)	MATERIAL	PRESSURE RATING AT 100°F (38°C) (PSIG)
1/4	1/16	Chrome molybdenum	100,000
1/4	3/32	304 stainless	30,000
3/8	1/8	304 stainless	45,000
9/16	3/16	Chrome molybdenum	50,000
9/16	5/16	304 stainless	20,000

Figure 1-23. Maximum Allowable Working Pressures, Superpressure Tubing

1-146. FLANGES AND FLANGED FITTINGS.

1-147. FLANGE PRESSURE RATING. Standard flanges and flanged fittings are pressure rated for a primary service at 100° F (38° C). Figure 1-24 lists the maximum allowable working pressures for steel flanges.

1-148. FLANGE TYPES. Standard flanges are available in several types, as illustrated in figure 1-25. The following paragraphs describe the recommended usage for each type of flange.

1-149. Weld neck flanges are distinguished from other types by their long tapered hub and gentle transition of thickness in the region of the butt weld joining them to the pipe. The long tapered hub provides an important reinforcement of the flange proper from the standpoint of strength and resistance to dishing. The smooth transition from flange thickness to pipe wall thickness, effected by the taper, is extremely beneficial under conditions of repeated bending, caused by line expansion or other variable forces and produces an endurance strength of weld neck flanged assemblies. It is equivalent to that of a butt welded joint between pipes, which, in practice, is the same as that of unwelded pipe. Thus, this type of flange is preferred for every severe service condition, whether this results from high pressure or from subzero or elevated temperature and whether loading conditions are substantially constant or fluctuate between wide limits. Weld neck flanges are particularly recommended for handling explosive, flammable, or costly liquids, where loss of tightness or local failure may be accompanied by disastrous consequences. When ordering weld neck flanges, the bore corresponding to the ID of the schedule pipe to be used should be specified.

1-150. Slip-on flanges can be used when space limitations prevent the installation of weld neck flanges. Slip-on flanges, if used, must be fillet welded, both internally and externally. Thus, the installed cost of slip-on flanges is approximately the same as weld neck flanges. Their calculated strength under internal pressure is in the order of two-thirds that of weld neck flanges and their life under fatigue is about one-third that of the latter. For these reasons, slip-on flanges are limited by the American Standard and the ASME Boiler Construction Code to the 150-and 300-pound pressure classes. They are properly restricted to moderate services where major shocks or pronounced pressure or temperature fluctuations are not expected to occur.

PRIMARY PRESSURE RATING (PSIG)	NOMINAL PIPE SIZE RANGE (INCHES)	RATING AT 100°F (38°C)				
		CARBON STEEL			STAINLESS STEEL	
		ASTM-A-181	ASTM-A-105		ASTM-A-182	
			GRADE 1	GRADE 2	GRADES F316 AND F347	GRADE 304
150	1/2-24	275			275	275
300	1/2-24	720			720	615
400	4-24		960		960	825
600	1/2-24		1,440		1,440	1,235
900	3-24			2,160	2,160	1,850
1,500	1/2-24			3,600	3,600	3,085
2,500	1/2-12			6,000	6,000	5,145

Figure 1-24. Maximum Allowable Working Pressures (PSIG), Non-Shock Conditions, Steel Flanges

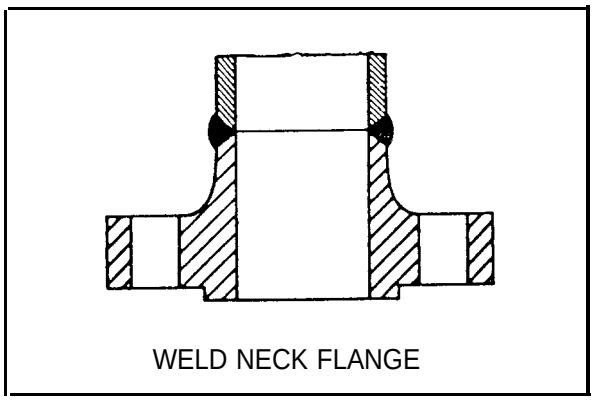

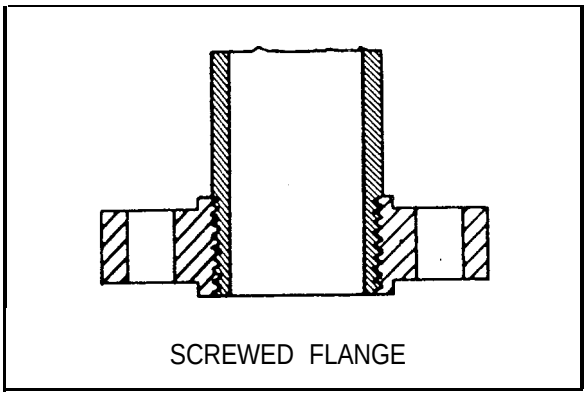

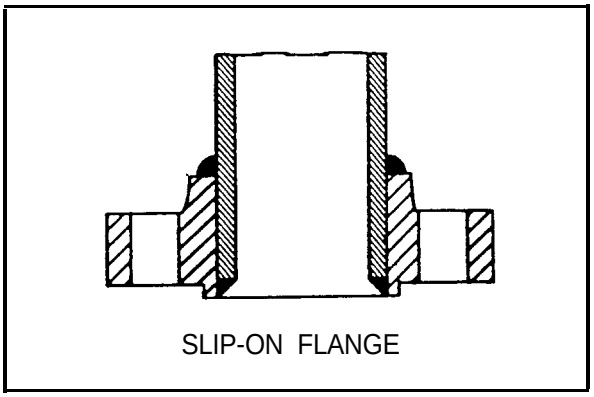

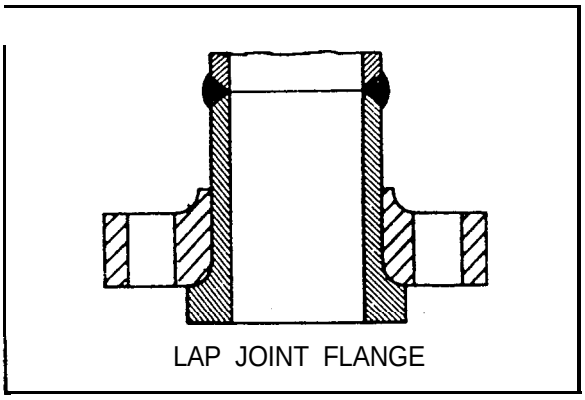

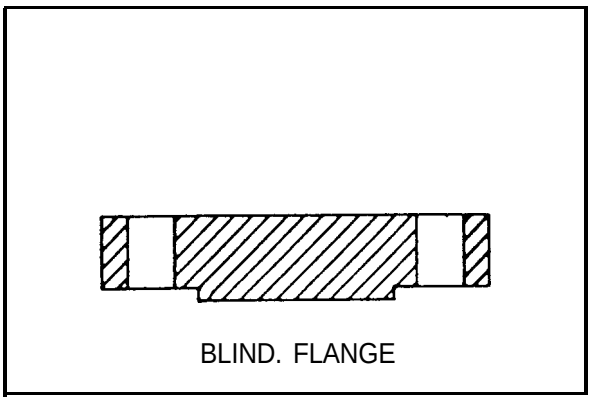

Figure 1-25. American Standard Flanges

NOTE

Systems utilizing slip-on type flanges are difficult to clean to liquid oxygen standards. The internal weld should fill the space up to the flange face, be ground off, and then resurfaced. Since the installed cost would be high, consideration should be given to other types more suitable for cleaning to liquid oxygen standards.

1-151. Lap joint flanges are primarily employed with lap joint stubs, the combined initial cost of the two items being approximately one-third higher than that of comparable weld neck flanges. Their pressure-holding ability is little better, if any, than that of slip-on flanges and the fatigue life of the assembly is only one-tenth that of weld neck flanges. The chief use of lap joint flanges in carbon or low alloy steel piping systems is in services necessitating frequent dismantling for inspection and cleaning, and where the ability to swivel flanges and to aline boltholes materially simplifies the erection of large diameter or unusually stiff piping. Their use at points where severe bending stress occurs should be avoided. A variation of the lap joint flange incorporating half rings to adapt to a valve body is utilized by one valve supplier. (See figure 1-105.) Unless otherwise specified, this valve will be supplied with this type of flange in sizes to 4 inches at pressures to 600 psig. This permits interchangeability of 150 psig, 300 psig, and 600 psig flanges on the same valve body as required.

NOTE

Carbon steel lap joint flanges should not be used in cryogenic service.

1-152. Screwed flanges, made of steel, are confined to special applications. Their chief merit lies in the fact that they can be assembled without welding; this explains their use in extremely high-pressure services, particularly at or near atmospheric temperature, where alloy steel is essential for strength and where the necessary postweld heat treatment is impractical. Screwed flanges are unsuited for conditions involving temperature or bending stresses of any magnitude, particularly under cyclic conditions where leakage through the threads may occur in relatively few cycles of heating or stress; seal welding is sometimes employed to overcome this, but cannot be considered as entirely satisfactory. Screwed flanges should be limited to a 2-inch maximum size.

1-153. Socket welded flanges are not acceptable for use in Air Force pressure systems.

1-154. Blind flanges are used to blank off the ends of piping, valves, and pressure vessel openings. From the standpoint of internal pressure and bolt loading, blind flanges, particularly in the large size, are the most highly stressed of all American Standard flange types; however, in comparison with other companion flanges, they are favored because they are not required to withstand line strains caused by thermal expansion or the weight of the piping system. When severe water hammer may be involved, consideration should be given to closures made of weld neck or slip-on flanges and caps.

1-155. FLANGE FACINGS. The standard flange types are supplied in a variety of flange-facing types. The following paragraphs describe the various facing types and their recommended usage.

1-156. Raised facings are most commonly employed with steel flanges: the face is 1/16-inch high for 150-and 300-psig flanges and 1/4-inch high for all other pressure classes. The face is machine-tool finished with spiral grooves (spiral grooves are unacceptable) or concentric grooves (approximately 1/64-inch deep on approximately 1/32-inch centers) to bite into and hold the gasket. Because both flanges of a pair are identical, no stocking or assembly problems are involved in its use. Raised face flanges generally are installed with flat ring composition gaskets which are equal in width to the raised face; when flat metal gaskets are used, the gasket width should be made equal; to that used with large tongue- and -groove facing (paragraph 1-158).

1-157. Male-and-female facings are standardized in both large and small types. The female face is 3/16-inch deep and the male face 1/4-inch high and both are usually smooth finished since the outer diameter of the female face acts to locate and retain the gasket. The width of the large male-and-female gasket contact surface, like the raised face, is excessive for use with metal gaskets. The small male-and-female overcomes this but provides too narrow a gasket surface for screwed flanges assembled with standard weight pipe.

1-158. Tongue-and-groove facings are also standardized in both large and small types. They differ from male-and female in that the inside diameters of tongue-and-groove do not extend to the flange bore, thus retaining the gasket on both its inner and outer diameter. This removes the gasket from corrosive or erosive contact with the line fluid. The small tongue-and-groove construction provides the minimum area of flat gasket it is advisable to use, thus resulting in the minimum bolting load for compressing the gasket and the highest joint efficiency possible with flat gaskets.

1-159. Ring joint facing is the most expensive but also the most efficient, partly because the internal pressure acts on the ring to increase the sealing force. Both flanges of a pair are alike, thus reducing the stocking and assembling problem found with both male-and-female and tongue-and-groove joints. Because the surfaces the gasket contacts are below the flange face, the ring joint facing is least likely of all facings to be damaged in handling or erecting. The flat bottom groove is standard.

1-160. Flat faces are a variant of raised faces, sometimes formed by machining off the 1/16-inch raised face of 150-and 300-psig flanges. Their chief use is for mating with 125- and 250-psig cast iron valves and fittings. A flat-faced steel flange permits employing a gasket whose outside diameter equals that of the flange or is tangent to the boltholes. In this manner the danger of cracking the cast iron flange when the bolts are tightened is avoided.

1-161. BUTT WELD FITTINGS.

1-162. FITTING TYPES. Butt weld fittings are available in many standard types, including elbows, tees, returns, crosses, reducers, stub ends, caps and laterals. They have the same schedule number designation as corresponding pipe. They are designed so that the actual bursting strength equals the computed bursting strength of pipe of the designated schedule number and material. To establish the allowable working pressures of seamless butt weld fittings, refer to the tables giving the allowable pressures for pipe of the same material and schedule number.

1-163. MATERIAL SPECIFICATIONS. Specifications for seamless butt weld fittings are ASTM A234 for carbon steel and ASTM A182 Grade F304, 316, and 347 or 321 for stainless steel.

1-164. THREADED FITTINGS.

1-165. STANDARD THREADED FITTINGS. These fittings are normally rated for ambient or100° F (38° C) service. This rating is stamped on each fitting. Standard fittings are rated at 2,000, 3,000, 4,000, and 6,000 psig at 100° F (38°C).

1-166. HIGH-PRESSURE LENS-RING THREADED FITTINGS. (See figure 1-26). These fittings are rated at a maximum working pressure of 10,000 psig through the 2-inch sizes. They utilize a lens-ring gasket seal and are available in carbon steel, low alloy steels, and stainless steel. (304 stainless fittings are stock items.) Fittings are available in nominal pipe sizes of 1 2 3 4, 1, 1-1/4, 1-1/2, and 2 inches for usage with schedule 80, 160, and double extra-strong pipe.

1-167. The high-pressure fittings, while rated at 10,000 psig when installed in a system, are limited to the pressure rating of the pipe. In no case can the pressure rating of the system exceed the pressure rating of the pipe.

1-168. Special adapters are available to connect systems utilizing the fittings to equipment or systems having tapered pipe threads, ring joint flanges, and weld fittings.

1-169. TUBE FITTINGS.

WARNING

Relieve pressure before adjusting fittings.

1-170. FLARED AND FLARELESS FITTINGS.

1-171. AN AND MS THREE-PIECE FITTING USED WITH FLARED TUBING. This fitting is standard for use with pressure systems to 3,000 psig. In the smaller sizes, systems have been tested satisfactorily to 6,000 psig. The basic design was taken from the AC811 three-piece fitting, with modifications of thread and fitting, with modifications of thread and fitting proportions. The angle of the flare of the fitting was established at 37 degrees to give maximum flare

contact and provide a nose sufficiently strong to resist crushing. The flare diameter was proportioned so that tubes can be flared without splitting. The length of the thread contact was increased and the lengths and tolerances adjusted so that no interference in assembly would occur.

1-172. AN fittings consist of three pieces: an AN818 coupling nut, and AN819 or MS20819 sleeve, and a connector. (See figure 1-27). The sealing occurs between the nose of the fitting and the inside of the flare on the tubing. The MS20819 sleeve has an external shoulder against which the AN818 nut acts. This produces a locking effect on the nut when the sleeve is slightly sprung upon proper torque. The sleeve can turn during initial assembly to allow for slight eccentricity of the tubing or nose of the connector. AN819D and MS20819D aluminum sleeves are not recommended, since the worked portion of the aluminum hardens and tends to crack.

1-173. PRECISION-TYPE FLARED FITTINGS. These fittings are a close tolerance version of the standard AN and MS fittings. Dimensionally, the precision-type flared fittings are identical to the standard fittings, however, a finer finish is specified on the sealing surfaces, and imperfect threads are not allowed. In addition, 100 percent sampling is specified and general quality is much better than with standard fittings. This quality permits a satisfactory seal at rated and higher pressures with less effort than that required with the standard fittings. Only stainless steel precision flared fittings, sizes up to 1-1/2 inch, are authorized for use on pressures of 3,000 to 6,000 psig.

1-174. MS THREE-PIECE FLARELESS FITTING. (See figure 1-28.) This fitting is used with standard tubing and is designed for pressure systems to 3,000 psig. The MS flareless fitting consists of three pieces, an MS21921 coupling nut, an MS21922 sleeve, and a connector. As the nut is tightened, the sleeve is driven forward by the nut until it contacts the conical sealing surface of the connector. Further tightening then causes the bevel of the nut to bear against the sleeve head and compress the sleeve against the tubing at a point directly under the sleeve head. At the same time, the sleeve end is guided by the connector bevel into contact with the tubing, where the cutting edge bites into the tubing. With the sleeve held at the point of the cut, continued tightening bows the sleeve into contact with the connector to form a leakproof seal. Bowing of the sleeve also supplies a spring-washer effect to resist loosening of the nut.

NOTE

In all tube and fitting installations, the fittings should be of the same material as the tubing. Fittings are designed to be as strong as the strongest tubing of like material which can be used with the fitting. Precision flared corrosion-resistant steel fittings shall be used on pressure systems of 3,001 to 6,000 psig working pressure. Flareless fittings should not be used with 5052-0 aluminum or very hard steel tubing.

1-175. MS AND AN PARTS. AN parts are in many instances being replaced by MS specifications and parts. In some cases the AN and MS parts are interchangeable. The Standards Manual should be checked for the applicable specification. Standard flared and flareless fittings are listed in figure 1-29 and illustrated in figures 1-30 and 1-31. The precision-type fitting equivalents of the standard fittings (identified with an equilateral triangle) are listed in figure 1-32.

1-176. AN FITTING THREADS.

1-177. AN fittings employ two types of threads: the AN straight thread, which conforms to the American National Fine Thread Series and 12-thread series (figure 1-33), and the American Standard Taper Pipe Thread (npt) (figure 1-13). The MS flareless fittings have the same threads as standard AN flared fittings and will mate with existing AN internal threads in valves and other equipment.

1-178. The two thread types are not identical, and though some of the sizes are apparently interchangeable, connecting the two will form an imperfect joint.

1-179. Pipe thread sizes have been standardized as listed in figure 1-34. The part number for AN and MS fittings does not show a dash number for pipe thread size, when thread is standard. When the pipe thread is a deviation from standard. it is designated as a second suffix.

1-180. TUBE FITTING DESIGNATION AND IDENTIFICATION.

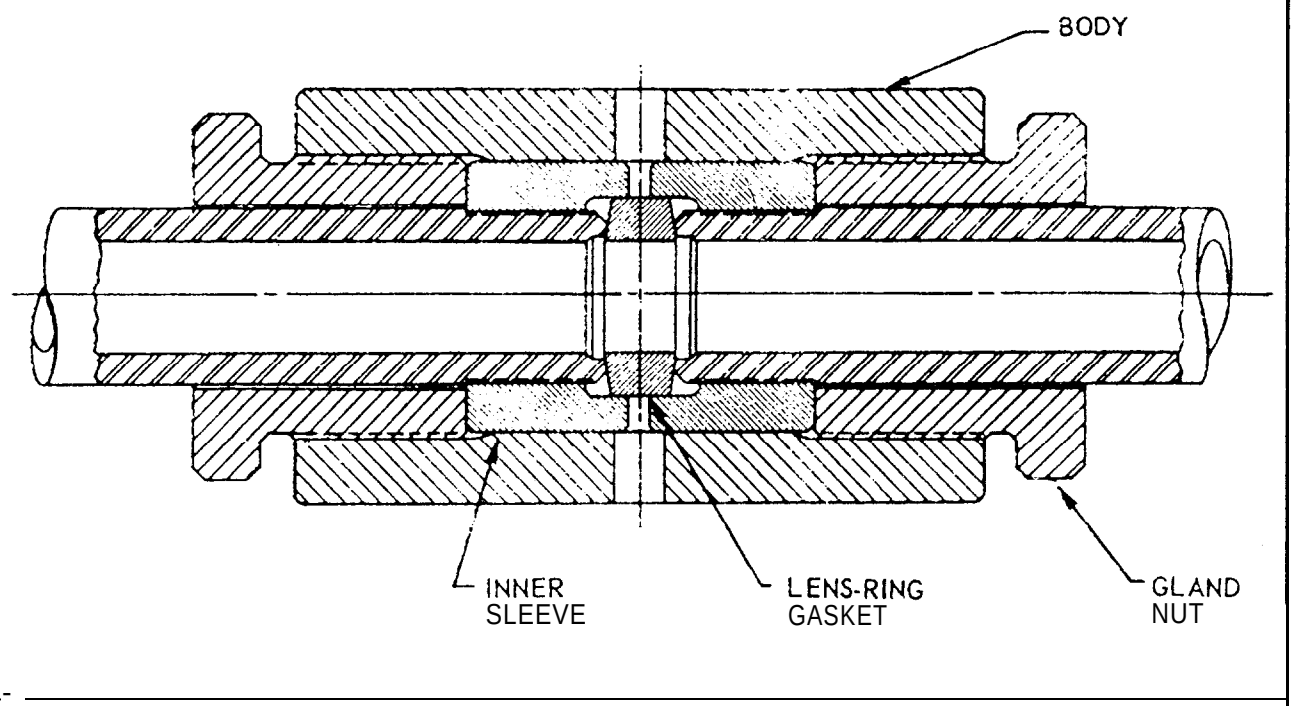

LENS-RING FITTING

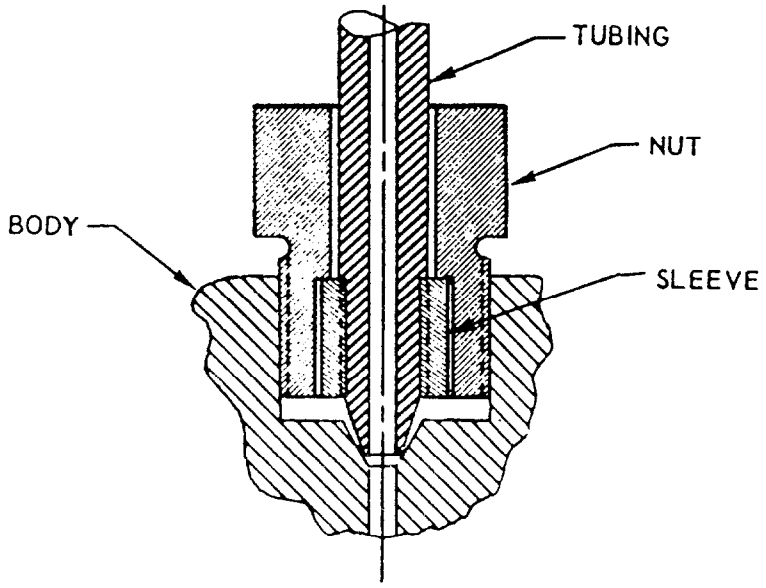

SUPERPRESSURE FITTING

Figure 1-26. High-Pressure Lens-Ring Fitting

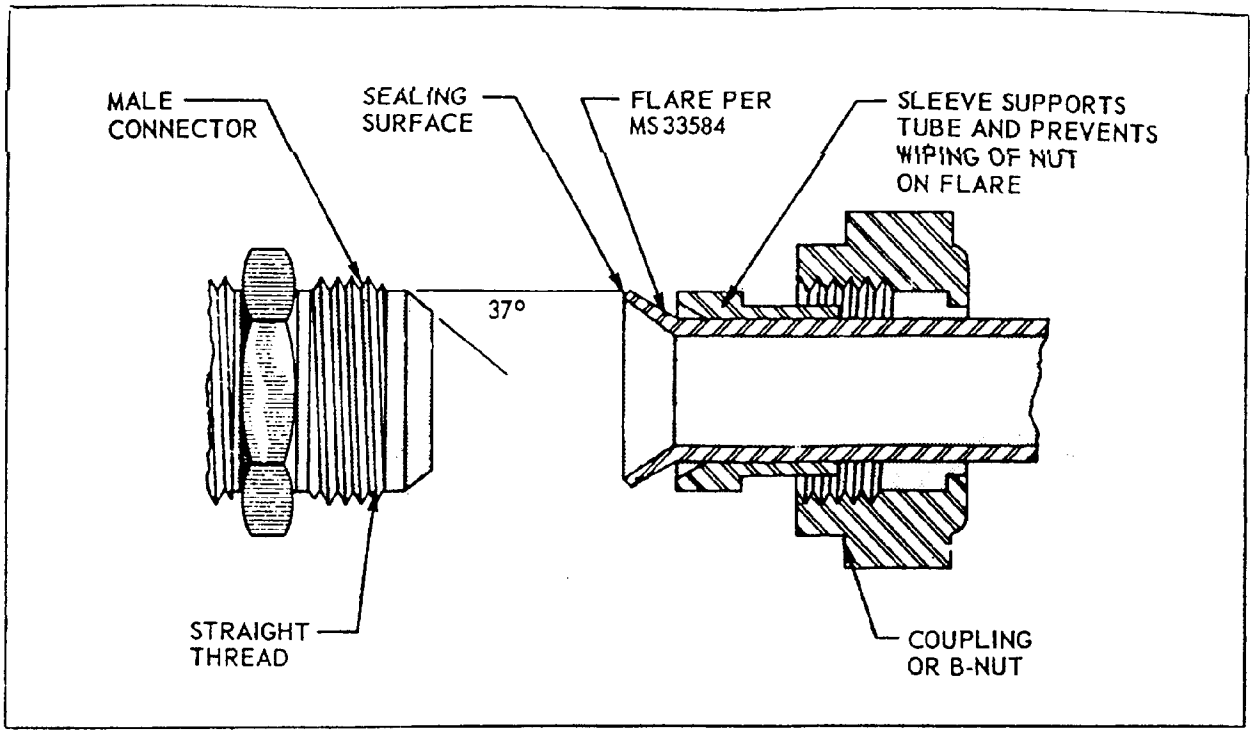

Figure 1-27. Standard AN Flared Tube Fitting

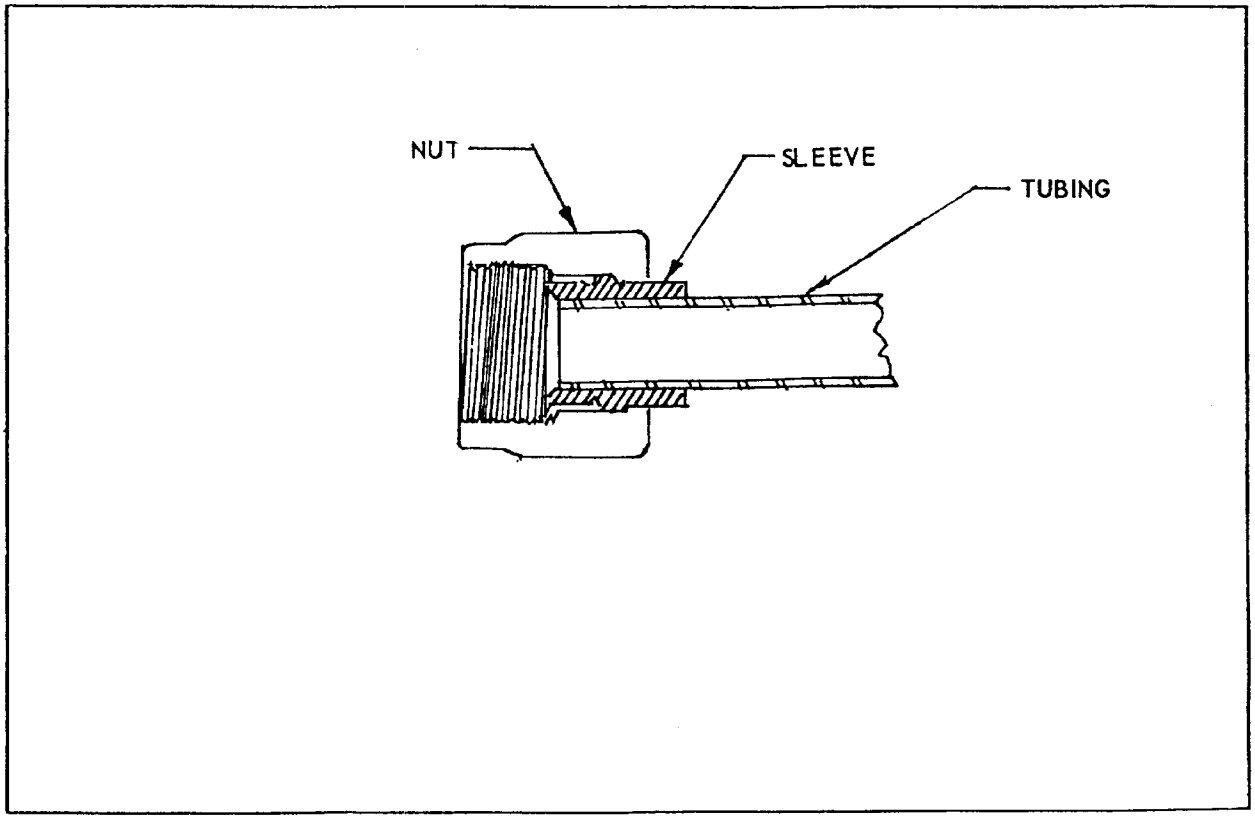

Figure 1-28. Standard MS Flareless Tube Fitting

BASIC PART NUMBER	DESCRIPTION	AVAILABLE SIZES IN INCHES	* AVAILABLE MATERIALS AND FINISHES
MS21923	ADAPTER, Flareless tube, bulkhead and universal to flared tube	1/8 through 2	1,7,9
MS21900	ADAPTER, Flareless tube to AN flared tube	3/16 through 2	1,7,9
AN807	ADAPTER, Hose to universal	1/4 through 1-1/2	1,6,7
AN774	BOLT, Flared tube fitting end, universal	1/4 through 1	1,7,9
AN775	BOLT, Universal fitting	1/4 through 1	1,7,9
AN912	BUSHING, Reducer	1/4 through 1-1 4	1,6,7
AN894	BUSHING, Screw-thread, expander	Internally threaded end 3 16 through 1-1 4, externally threaded end 1/8 through 1	1,7,9
MS21915	BUSHING, Screw-thread, expander, flareless tube connection	Internally threaded end 3 16 through 1-1 4, externally threaded end 1/8 through 1	1,7,9
AN893	BUSHING, Screw-thread, reducer	Internally threaded end 1 4 through 1, externally threaded end 5/16 through 1-1/4	1,7,9
AN929	CAP ASSEMBLY, Pressure seal, flared tube fitting	1/8 through 3	1,7
MS21914	CAP, Pressure seal, flareless tube fitting	1/8 through 1-1/2	9
AN849	CONNECTOR, Hose, bulkhead	1/4 through 1-1/2	1,6,7
AN910	COUPLING, Pipe thread	1/8 through 1-1/4	1,6,7
AN827	CROSS, Flared tube	1/8 through 2	1,7,9
MS21906	CROSS, Flareless tube	1/8 through 2	1,7,9
AN918	CROSS, Internal pipe thread	1/8 through 1-1/4	1,6,7
AN937	CROSS, Internal screw thread	1/4 through 1-1/4	1,7,9

*MATERIAL AND FINISH CODE:

1 - Aluminum Alloy
2 - Brass
3 - Bronze
4 - Cadmium Plated
5 - Copper
6 - Copper Alloy
7 - Corrosion Resistant Steel
8 - Magnesium
9 - Steel

Figure 1-29. Standard AN and MS Fittings (Sheet 1 of 4)

BASIC PART NUMBER	DESCRIPTION	AVAILABLE SIZES IN INCHES	AVAILABLE MATERIALS AND FINISHES
AN823	ELBOW, 45°, flared tube and pipe thread	1/8 through 2	1,6,7,9
AN837	ELBOW, 45°, flared tube and universal	1/8 through 2	1,7,9
MS21907	ELBOW, 45°, flareless tube and universal	1/8 through 2	1,7,9
AN846	ELBOW, 45°, hose, bulkhead	1/4 through 1 -1/2	1,6,7
AN839	ELBOW, 45°, hose to universal	1/4 through 1 -1/2	1,6,7
AN915	ELBOW, 45°, internal and external pipe thread	1/8 through 1-1/4	1,6,7
AN941	ELBOW, 45°, internal screw thread	1/4 through 1 -1/4	1,7,9
AN791	ELBOW, 45°, union	1/8 through 5/8	2,4,7
AN778	ELBOW, 45°, universal	1/4 through 1	1,7,9
AN777	ELBOW, 75°, universal	1/4 through 1	1,7,9
AN821	ELBOW, 90°, flared tube	1/8 through 2	1,7,9
AN833	ELBOW, 90°, flared tube and bulkhead universal	3/16 through 1-3/16	1,7,9
MS20822	ELBOW, 90°, flared tube and pipe thread	1/8 through 2	1,6,7,9
MS21904	ELBOW, 90°, flareless tube	1/8 through 2	1,7,9
MS21908	ELBOW, 90°, flareless tube, bulkhead and universal	1/8 through 2	1,7,9
MS21925	ELBOW, 90°, flareless tube, universal, high profile	1/4 through 1 -1/4	1,7,9
MS21926	ELBOW, 90°, flareless tube, universal, low profile	1/4 through 1 -1/4	1,7,9
AN848	ELBOW, 90°, hose, bulkhead	1/4 through 1-1/2	1,6,7
AN838	ELBOW, 90°, hose to universal	1/4 through 1-1/2	1,6,7
AN914	ELBOW, 90°, internal and external pipe thread	1/8 through 1-1/4	1,67
AN916	ELBOW, 90°, internal pipe thread	1/8 through 1 -1/4	1,6,7
AN939	ELBOW, 90°, internal screw thread	1/4 through 1-1/4	1,7,9
AN790	ELBOW, 90°, union	1/8 through 5/8	2,4,7

*MATERIAL AND FINISH CODE:

1 - Aluminum Alloy
2 - Brass
3 - Bronze
4 - Cadmium Plated
5 - Copper
6 - Copper Alloy
7 - Corrosion Resistant Steel
8 - Magnesium
9 - Steel

Figure 1-29. Standard AN and MS Fittings (Sheet 2 of 4)

BASIC PART NUMBER	DESCRIPTION	AVAILABLE SIZES IN INCHES	* AVAILABLE MATERIALS AND FINISHES
AN776	ELBOW, 90°, universal	1/4 through 1	1,7,9
AN871	FLANGE, Straight thread, boss welding	1/4 through 1-1/2	1,9
AN816	NIPPLE, Flared tube and pipe thread	1/8 through 2	1,6,7,9
AN911	NIPPLE, Pipe thread	1/8 through 1-1/4	1,2,3,7
AN780	NIPPLE, Union	1/8 through 1	2,4,7
AN818	NUT, Coupling	1/8 through 3	1,7,9
AN924	NUT, Flared tube, bulkhead and universal fitting	1/8 through 3	1,7,9
AN6289	NUT, Flared tube universal fitting	1/8 through 2	1,7,9
AN817	NUT, Sleeve, coupling	1/8 through 2	1,7,9
MS21917	NUT, Sleeve coupling, flareless	1/8 through 2	1,7,9
MS21921	NUT, Sleeve coupling, flareless	1/8 through 2	1,7,9
AN805	NUT, Union	1/8 through 1	2,4,7
AN814	PLUG AND BLEEDER, Screw thread	1/8 through 2	1,7,9
AN806	PLUG, Flared tube	1/8 through 2	1,7,9
MS21913	PLUG, Flareless tube	1/8 through 2	1,7,9
AN932	PLUG, Pipe, countersink hex head	1/16 through 1-1/4	1,6,7,8,9
MS20913	PLUG, Pipe, square head	1/16 through 2-1/2	1,6,7,9
AN909	PLUG, Square head, drilled for locking	3/4 through 1-1/2	3,4,9
AN919	REDUCER, Flared tube, external thread	Large end 3/16 through 1-1/2, small end 1/8 through 1-1/4	1,7,9
MS21916	REDUCER, Flareless tube, external thread	Large end 3/16 through 1-1/2, small end 1/8 through 1-1/4	1,7,9
AN819	SLEEVE, Coupling	1/8 through 3	1,7,9
MS21918	SLEEVE, Coupling, flareless	1/8 through 3	9

*MATERIAL AND FINISH CODE:

1 - Aluminum Alloy
2 - Brass
3 - Bronze
4 - Cadmium Plated
5 - Copper
6 - Copper Alloy
7 - Corrosion Resistant Steel
8 - Magnesium
9 - Steel

Figure 1-29. Standard AN and MS Fittings (Sheet 3 of 4)

BASIC PART NUMBER	DESCRIPTION	AVAILABLE SIZES IN INCHES	*AVAILABLE MATERIALS AND FINISHES
MS21922	SLEEVE, Coupling, flareless	1/8 through 3	7,9
MS20819	SLEEVE, Flared tube fitting	1/8 through 3	1,2,7,9
AN824	TEE, Flared tube	1/8 through 2	1,7,9
AN834	TEE, Flared tube, bulkhead and universal	1/8 through 2	1,7,9
AN784	TEE, Flared tube, internal thread on run	1/8 through 1 -1/4	1,7,9
AN783	TEE, Flared tube, internal thread on side	1/8 through 1-1/4	1,7,9
AN804	TEE, Flared tube with bulkhead on run	1/8 through 2	1,7,9
AN826	TEE, Flared tube with pipe thread on run	1/8 through 2	1,6,7,9
AN825	TEE, Flared tube with pipe thread on side	1/8 through 2	1,6,7,9
MS21905	TEE, Flareless tube	1/8 through 2	1,7,9
MS21909	TEE, Flareless tube, bulkhead and universal on side	1/8 through 2	1,7,9
MS21912	TEE, Flareless tube, bulkhead on run	1/8 through 2	1,7,9
MS21911	TEE, Flareless tube, internal thread on run	1/8 through 1-1/4	1,7,9
MS21910	TEE, Flareless tube, internal thread on side	1/8 through 1-1/4	1,7,9
AN917	TEE, Internal pipe thread	1/8 through 1-1/4	1,6,7
AN938	TEE, Internal screw thread	1/4 through 1-1/4	1,7,9
AN795	TEE, Union	1/8 through 5/8	2,4,7
AN779	TEE, Universal fitting	1/4 through 1	1,7,9
AN815	UNION, Flared tube	1/8 through 3	1,7,9
AN832	UNION, Flared tube, 3/8 bulkhead and universal	1/8 through 2	1,7,9
MS24487	UNION, Flared tube, universal	1/8 through 1	1,7,9
MS21902	UNION, Flareless tube	1/8 through 2	1,7,9
MS21924	UNION, Flareless tube, bulkhead and universal	1/8 through 2	1,7,9
AN960	WASHER, Flat	5/64 through 2-33/64 id	1,2,4,5,7,9

*MATERIAL AND FINISH CODE:

1 - Aluminum Alloy	4 - Cadmium Plated	7 - Corrosion Resistant Steel
2 - Brass	5 - Copper	8 - Magnesium
3 - Bronze	6 - Copper Alloy	9 - Steel

Figure 1-29. Standard AN and MS Fittings (Sheet 4 of 4)

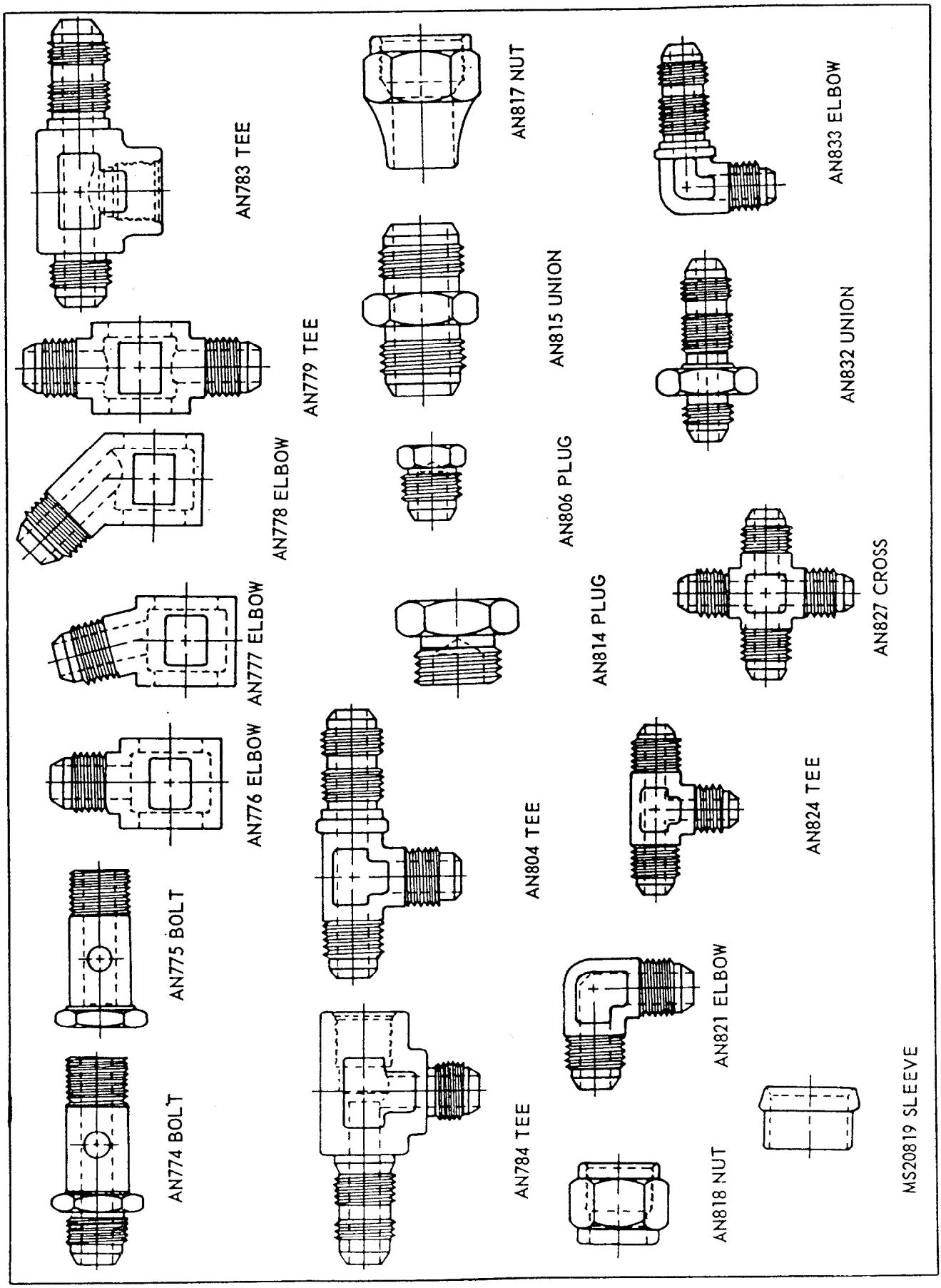

Figure 1-30. Standard AN and MS Flared Fittings (Sheet 1 of 4)

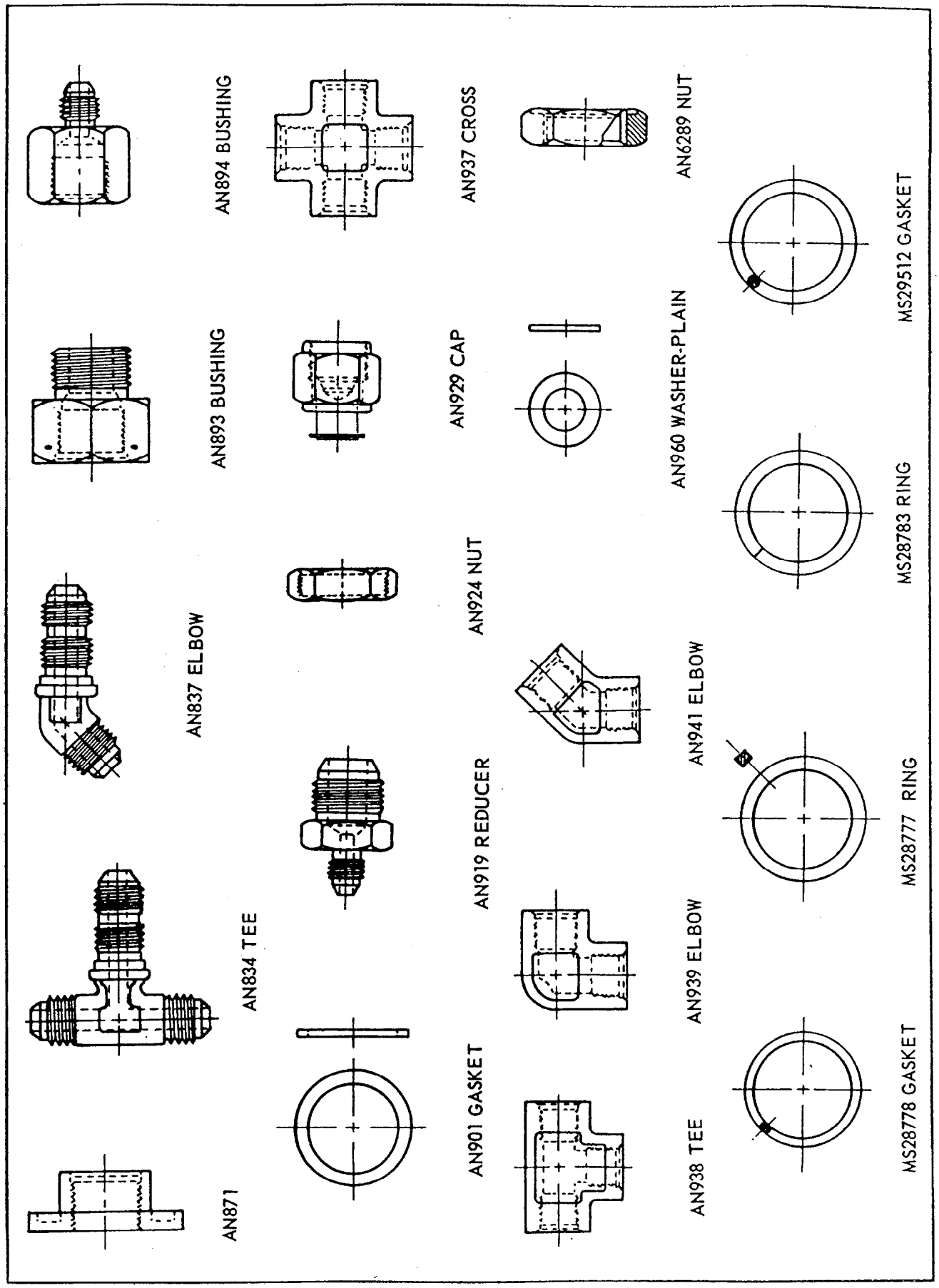

Figure 1-30. Standard AN and MS Flared Fittings (Sheet 2 of 4)

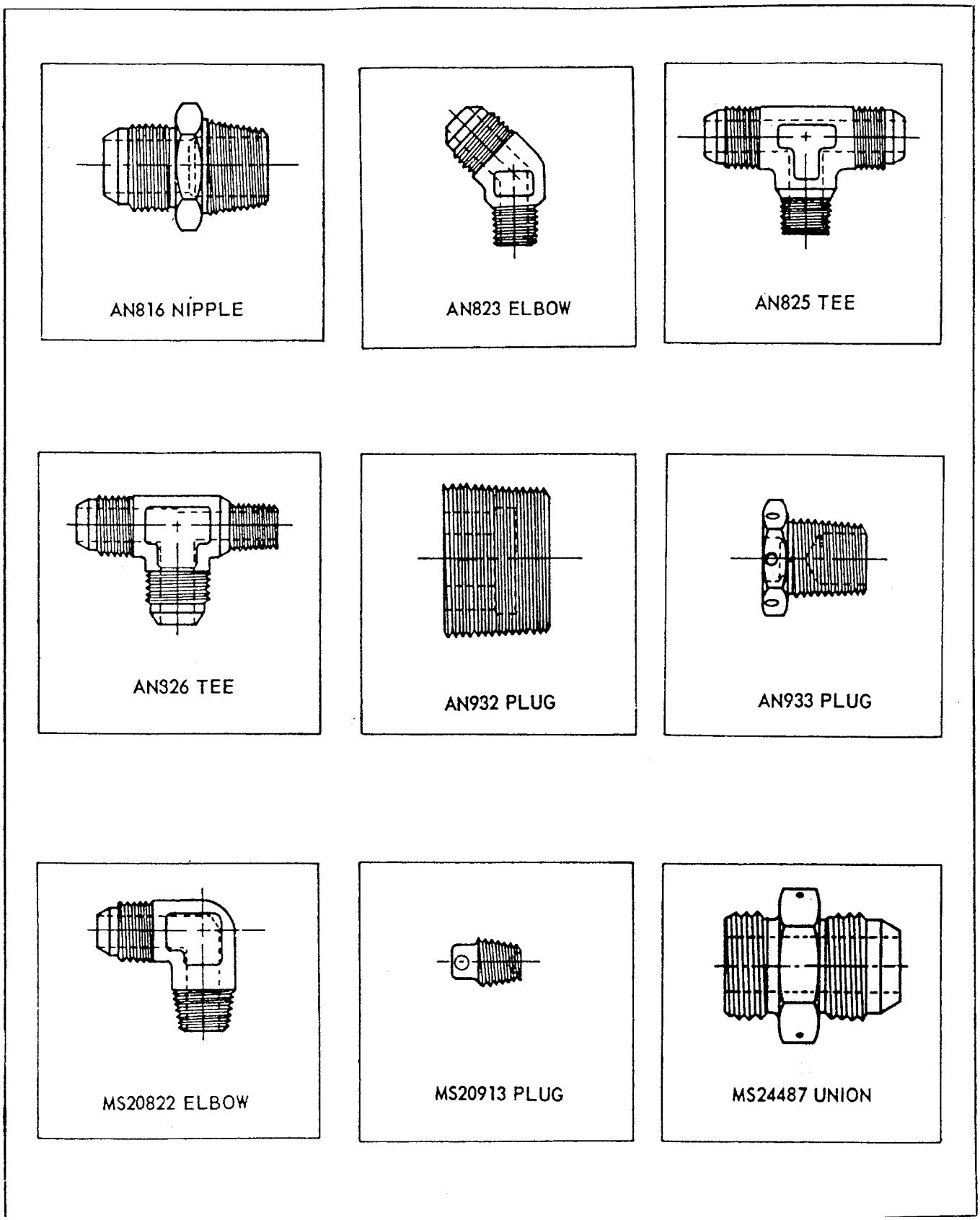

Figure 1-30. Standard AN and MS Flared Fittings (Sheet 3 of 4)

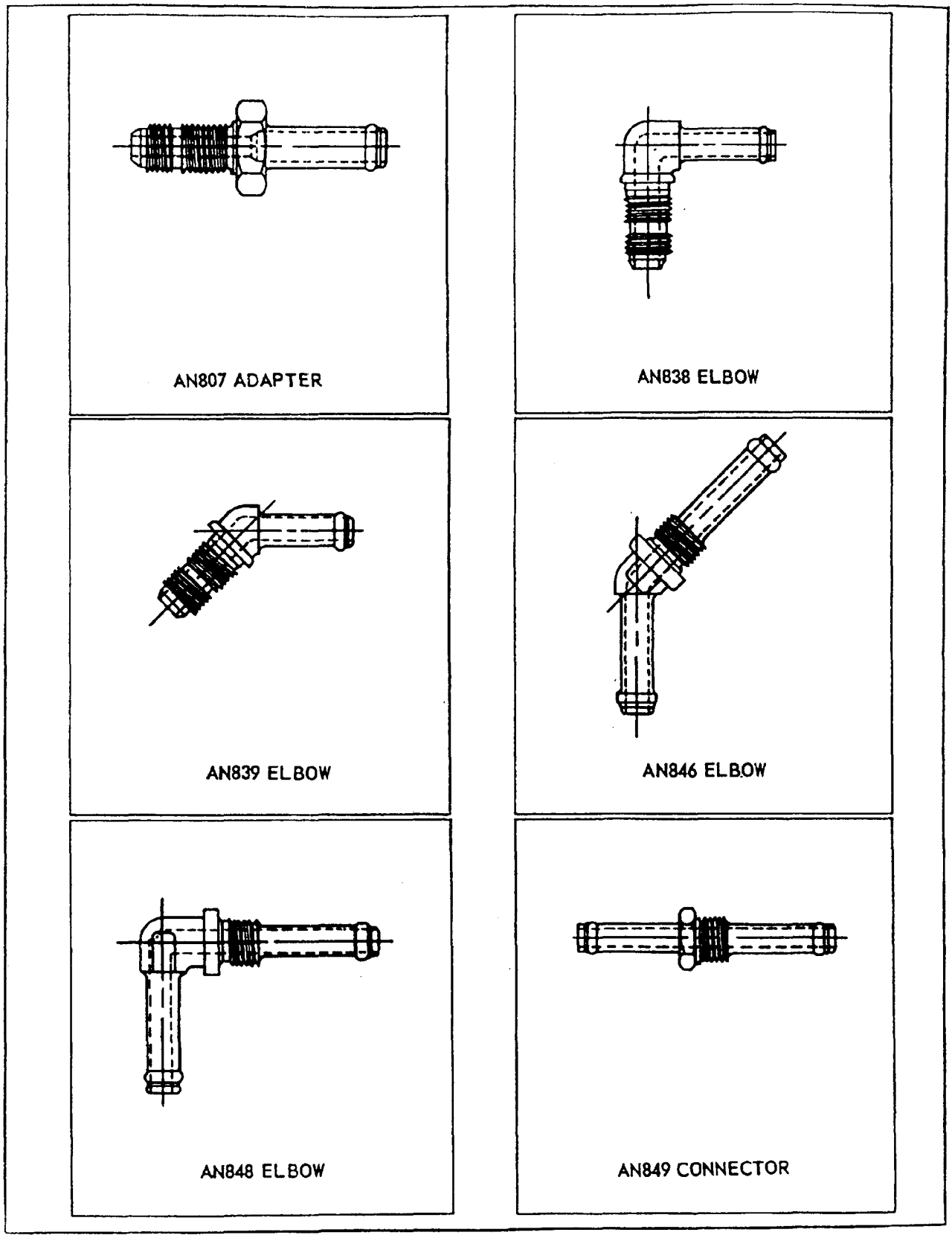

Figure 1-30. Standard AN and MS Flared Fittings (Sheet 4 of 4)

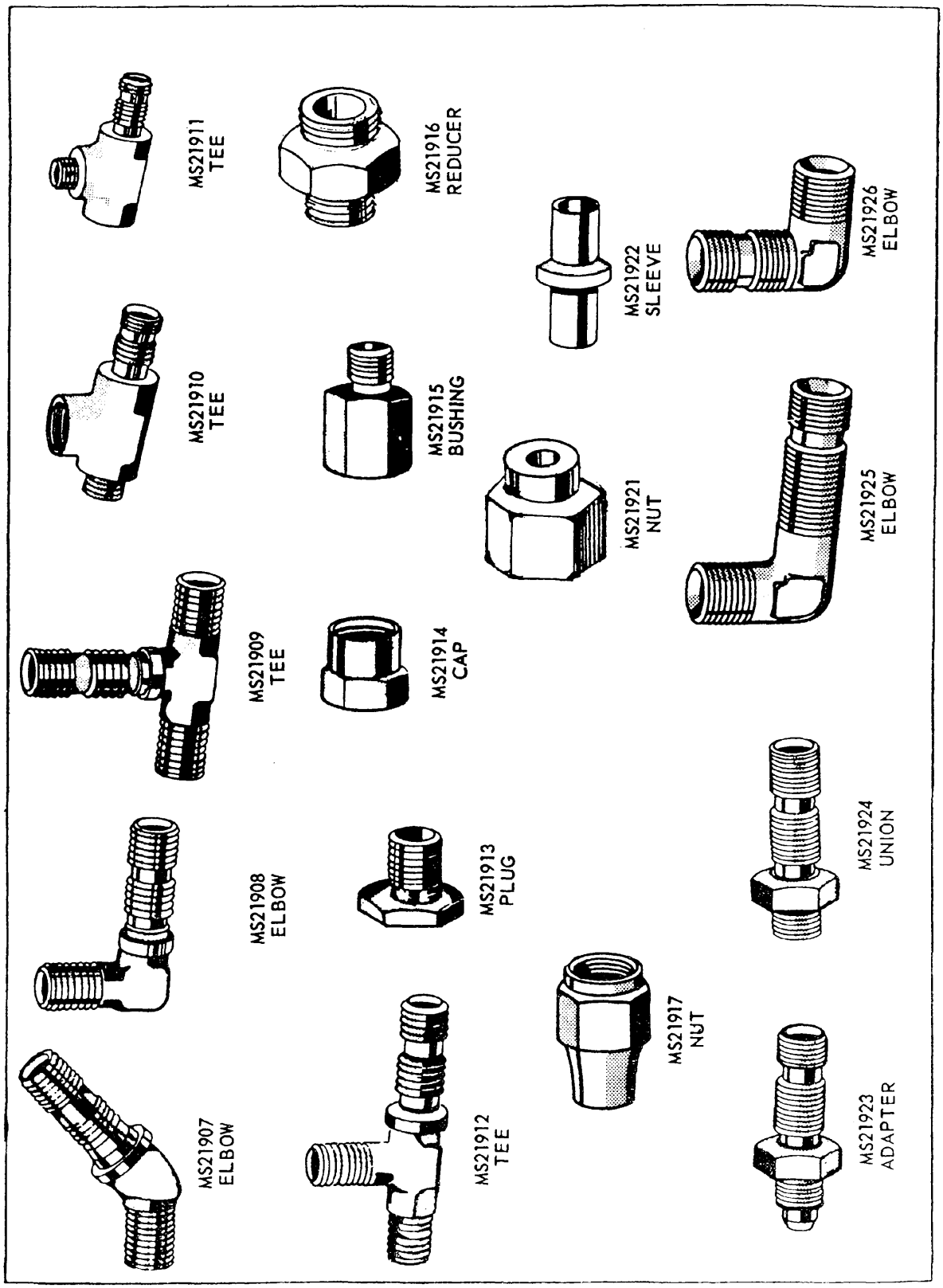

Figure 1-31. Standard MS Flareless Fittings

AN OR MS STANDARD	PRECISION FLARED
AN774	MS24387
AN783	MS24388
AN784	MS24389
AN804	MS24390
AN806	MS24404
AN814	MS24391
AN815	MS24392
AN821	MS24401
AN824	MS24402
AN827	MS24403
AN832	MS24393
AN833	MS24394
AN834	MS24395
AN837	MS24396
AN893	MS24397
AN894	MS24398
AN919	MS24399
AN924	MS24400
MS21900	MS24405

Figure 1-32. Precision Type Fittings

1-181. PARTS DESIGNATION. Parts designation numbers for the AN flared tube fittings are made up of a basic part No. followed by a dash number indicating the OD of the tube in sixteenths of an inch and a letter designating the material type. Most fittings follow the convention described above, but some do not. Therefore, before specifying a particular part No., obtain the detail sheet(s) for the standard needed and follow the instructions for determining the appropriate part number.

Example: 815-8D

Type fitting is indicated by the basic part No. Size fitting is indicated by the dash number. Material is indicated by letter designation.

a. Material designations are as follows.

No letter ..... Steel
D ..... Aluminum alloy
B ..... Copper alloy
C ..... Corrosion-resistant steel (302, 303, 304, 316, and 321)
S ..... Corrosion-resistant steel (304L and 347)

TUBING OD (INCHES)	FITTING DASH NO.	FITTING THREAD SIZE*
1/8	2	5/16 - 24 UNF - 3A
3/16	3	3/8 - 24 UNF - 3A
1/4	4	7/16 - 20 UNF - 3A
5/16	5	1/2 - 20 UNF - 3A
3/8	6	9/16 - 18 UNF - 3A
1/2	8	3/4 - 16 UNF - 3A
5/8	10	7/8 - 14 UNF - 3A
3/4	12	1-1/16 - 12 UN - 3A
1	16	1-5/16 - 12 UN - 3A
1-1/4	20	1-5/8 - 12N - 3A
1-1/2	24	1-7/8 - 12N - 3A
1-3/4	28	2-1/4 - 12 UN - 3A
2	32	2-1/2 - 12 UN - 3A

*Diameter - threads per inch - thread type (Per Specification MIL-S-7742).

Figure 1-33. AN and MS Fittings, Straight-Threaded Sizes

TUBING OD (INCHES)	TUBING DASH NO.	PIPE THREAD DASH NO.	PIPE THREAD SIZE (INCHES)
1/8	2	2	1/8
3/16	3	2	1/8
1/4	4	2	1/8
5/16	5	2	1/8
3/8	6	4	1/4
1/2	8	6	3/8
5/8	10	8	1/2
3/4	12	12	3/4
1	16	16	1
1-1/4	20	20	1-1/4
1-1/2	24	24	1-1/2
1-3/4	28	24	1-1/2
2	32	32	2

Figure 1-34. AN and MS Fittings, Tapered-Threaded Sizes

b. When the fitting is available in steel or aluminum only, the designations are as follows:

No letter .....Steel
D .....Aluminum alloy

c. When the fitting is available in copper alloy or aluminum alloy only, the designations are as follows:

No letter .....Copper alloy
D .....Aluminum alloy

1-182. The MS flared-type fitting designation method is the same for AN flared fittings. The material designation letter normally follows the basic part number; however, the Military Specifications list it also following the dash number.

1-183. PARTS IDENTIFICATION. Parts identification for the AN and MS fittings are made with a number or letter and a color.

a. AN and MS fittings are marked with the letters AN or MS, either embossed or by impression stamping.

b. AN fittings made from corrosion-resistant steel are marked with the letter S if fabricated from either type 304L, 347, or 321 steel, and with the letter C if fabricated from either type 302, 303, 304, or 316 steel. Wherever practicable each part is also identified by the complete drawing number.

c. In addition to the above identification, AN and MS fittings are identified by colors as follows:

An fittings (flared and straight thread)

Aluminum alloy .....Blue
Steel .....Black
Aluminum bronze .....Natural cadmium plate
Copper base alloys .....Natural cadmium plate
Corrosion-resistant steel .....None

MS fittings (flareless)

Aluminum alloy .....Green
Steel .....Natural cadmium plate
21900-21901 aluminum alloy .....Brown
21900-21901 steel .....Natural cadmium plate
Ferrules 21918 .....Natural cadmium plate

1-184. SUPERPRESSURE FITTINGS.

1-185. Superpressure, union-type fittings consist of four parts: a male tube, a female connection in valve or fitting, a gland nut, and an inner sleeve, as illustrated in figure 1-26. The male tube has a 59-degree conical seating surface that mates with a corresponding 60-degree female conical seat in the body. The male tube and inner sleeve have left-hand threads; the gland nut and opening in the valve or fitting body have right-hand threads. As the gland nut is slipped over the sleeve and screwed into the opening in the body, the sleeve is tightened on the tubing at the same time as the conical seating surfaces are sealed,

1-186. PRESSURE VESSELS.

1-187. GENERAL REQUIREMENTS.

1-188. The pressure vessel normally is the most expensive item of the high-pressure system. It is, therefore, important that the selection be made to represent cost savings as well as to provide an item that is suitable for many propellants and test programs. The following paragraphs describe some of the selection factors.

1-189. MATERIAL. A run or storage vessel is generally used for many test programs with various propellants. Standardization on a 304, 321, or 347 material provides a vessel suitable for service with the majority of oxidizers and fuels at ambient as well as cryogenic temperatures. Where a vessel is only to be used at near ambient temperature in hydrocarbon-type fuels, carbon steel or carbon steel stainless clad is suitable. Carbon steel pressure vessels are generally suitable for the pressuring gases used in high-pressure systems.

1-190. SIZE. Run or storage vessels are generally sized for a minimum surface area. There are many factors making this desirable; however, minimum surface area exposed to corrosive liquids and heat leak in cryogenic applications and minimum weld and material requirements are important factors. Generally, a range of sizes including 25, 50, 200, 400, 1,000, 2,500, 7,000, 11,000, 20,000, and 30,000 gallons in various pressure ranges meet the requirements

for run tanks. Cryogenic storage vessels in sizes of 50, 500, 1,500, 2,500, 5,000, 14,000, 28,000, and 45,000 gallons are available. For pressurant storage, the 470 ft^3 (3,000 psig) carbon steel pressure vessel is an industrial standard.

1-191. PRESSURE RATING. Run vessels for thrust chamber test stands should be in the 2,000-3,000 psig range. Run vessels for engine test stands should be rated at 160-200 psi. For storage vessels, it is generally desirable to pressure-rate them from 50 to 125 psig. For pressurant storage, the 3,000-psig pressure rating provides for the majority of requirements.

NOTE

Where pressure vessels are utilized as run tanks in systems, special equipment may be required.

1-192. PRESSURANT GAS DIFFUSER. In all cryogenic and some ambient conditions it is necessary to diffuse the pressurant gases to prevent them from being absorbent into the liquid propellant. Several standard designs are available which include multiport cappe tubes with a 4-to-1 discharge to inlet area ratio.

1-193. TANK BAFFLES. In low-pressure pump feed systems, baffles are required at the base of tank to prevent vortexing of the liquid. A standard design is the largest circular flat plate (consistent with allowable flow area and pressure drop) that can be mounted on a minimum of four thin, radial, vertical supports below the 5 percent full level. The four vertical supports start at the periphery of the outlet opening and extend to the periphery of the large circular plate. Antivortex baffles must be installed after the tank is fabricated and must be made in sections to fit through the largest tank opening.

1-194. TANK OUTLET SCREENS. Cylindrical outlet screens are installed in the tank outlet to prevent foreign objects from entering the discharge ducting in pump feed systems. The cylindrical section is three to five inches in height and the same diameter as the tank discharge. Evenly spaced support rods are placed around the circumference of the cylindrical section. The rods are secured at the top to a 1/4-inch plate and welded at the bottom to an insert flange which is sandwiched between the tank discharge flange and the discharge duct flange. The vertical rods are enclosed by a double screen, with 12 mesh on the outside and four mesh on the inside. This outlet screen is readily removed for inspection and cleaning.

1-195. ASME CODE PRESSURE VESSELS.

1-196. All pressure vessels for high-pressure systems designed and fabricated under the ASME code shall be in conformance with the latest revision of the ASME Unfired Pressure Vessel Code and the local and state codes where applicable.

1-197. Each pressure vessel shall be equipped with one or more safety devices to ensure safe operation of the vessel as specified by code.

1-198. ICC PRESSURE VESSELS.

1-199. Vessels designed and fabricated according to Interstate Commerce Commission codes are not generally specified for permanent installation in high-pressure systems. If an ICC vessel is installed on a permanent basis, it shall fall under the ASME requirements with regard to safety factor and use.

1-200. NONCODE PRESSURE VESSELS.

1-201. Many high-pressure vessels, because of pressure requirements, fabrication techniques, or material selections, do not fall within the scope of the ASME Unfired Pressure Vessel Code. All these vessels shall be designed in accordance with the recommended formula of the ASME Unfired Pressure Vessel Code. The code recommended design stress for those materials listed, or a safety factor equivalent to code recommendation for materials not listed, shall be used. In any case, the safety factor shall not be less than four unless other wise stated in the code.

1-202. GASKETS AND SEALS.

1-203. O-RINGS.

1-204. O-rings are used as moving and nonmoving seals and gaskets in applications which cover a wide range of pressures, temperatures, and fluids. They are available in a variety of inside diameters and cross sections and are manufactured in a range of materials which include natural rubber and various synthetic rubbers (butyl, GRS, neoprene, nitril or buna-N, silicone, and polysulfide) as well as teflon, Kel-f, and other plastics. Each material has characteristics which make it suitable for use with particular fluids. Some of these materials and services are listed in figure 1-35. O-ring dimensions are designed for specific applications; in general, different types are not interchangeable. (See Appendix IV for General Cross-Reference.)

1-205. FLUOROCARBON PLASTICS (TEFLON AND KEL-F).

1-206. Teflon TFE is composed of carbon and fluorine atoms and is extremely inert to chemical attack. It is seriously affected only by chlorine trifluoride and fluorine at high temperatures and

molten alkali metals. Its very low coefficient of friction lends it added utility where nonlubricated bearing surfaces are needed. Its compressive strength is low (600 psi @ one percent offset) which gives it a tendency to cold flow under pressure. TFE should be used for compression gaskets only in areas where it is confined.

1-207. Teflon FEP has almost the same properties as TFE but has slightly higher compressive strength with lowered maximum operating temperatures. FEP should not be used at temperatures above 300°F. FEP is not used extensively by the Air Force.

1-208. Kel-F PCTFE is composed of fluorine, carbon and chlorine atoms. The mechanical and permeability properties of Kel-F are superior to Teflon. The chemical resistance of Kel-F is slightly less than Teflon but is unaffected by most chemicals and concentrated acids. Kel-F has high compressive strength (7,850 psi @ one percent offset) with high resistance to cold flow. Kel-F should be used in lieu of Teflon for unconfined compressive gaskets. Kel-F should not be used for non-lubricated bearings.

1-209. AN6227, AN6230, MS28778, MS28775, and M83461/1 O-rings are formed of buna-N (nitril) compounds. Buna-N compounded O-rings are considered very good in providing dynamic reciprocating and static sealing for hydraulic applications at temperatures listed in each O-ring procurement specification. The purchase, storage, and use of rubber diaphragms, packings, gaskets, and O-rings are governed by several specifications. Allowable lengths of time of storage differ with respect to individual parts, subassemblies, and completed units. AN6227, 1N6230, MS28778, MS28775, and M83461/1 O-rings are formed of buna-N (Nitril) compounds.

1-210. Installation of an O-ring with a fitting requires the fitting to have a hex shoulder of sufficient width to cover the entire O-ring. An AN6289 nut and an AN6291 (MS28777) or MS9058 non-extrusion ring must be used with the AN6290 gasket.

1-211. AN6230 O-rings are intended only for static stationary seals and shall not be used for running seals. This O-ring is comparable to AN6227 but is limited to static applications. It is furnished in 10 dimensions of 1-5/8 through 4-5/8 inches and is available only in 1/8-inch cross section size.

1-212. Static seals conforming to drawings AN6230-1 through AN6230-25 inclusive may be used at pressures up to and including 1,500 psig provided the clearances and eccentricities are not exceeded.

1-213. Above 1,500 psig pressure, the AN6230 gasket (through size AN6230-25) and the sizes of AN6227 packing which are used to augment below the AN6230-1 size shall be used with the applicable AN6244, AN6246, MS28774, MS28782, or MS28783 backup ring in accordance with paragraph 1-220.

1-214. AN6227 O-rings are designed for hydraulic service. They are suitable for moving or non-moving seals. The usual application is with hydraulic pistons, valve stems, or other installations involving reciprocating, rotary, or oscillating movement. Provisions must be made for lubrication when they are installed as moving seals in pneumatic systems. AN6277 O-rings are not designed for use with fittings.

1-215. AN6227 O-rings are furnished in a range of various cross section widths and diameter sizes to fit standard O-ring gland dimensions per Specifications MIL-P-5514. For use with pressures from 1,500-3,000 psig, the gland design has provisions for non-extrusion devices of leather, teflon, Kel-F, or other materials to prevent extrusion of the O-ring as illustrated in figure 1-37. AN6227 dash numbers do not rep-

NUMBER	NAME	APPLICATION	SYSTEM	PUBLICATION GOVERNING		PROCU-REMENT SPECIFI-CATION	QUALIFIED PRODUCTS LIST	REMARKS
				DESIGN INSTAL-LATION	STORAGE AND USE			
	O-RING							
AN6227	Packing, O-ring	Static and dynamic	Hyd, pneu	MIL-P-5514	ANA Bul 438 TO 42E2-1-2	MIL-P-5516	QPL-5516	General use -65°F to +160°F
AN6230	Gasket, O-ring	Static only	Hyd, pneu	MIL-P-5514	ANA Bul 438 TO 42E2-1-2	MIL-P-5516	QPL-5516	General use -65°F to +160°F
AN123851 through AN123950	Seal, O-ring	Static and dynamic	lubri-cating	MIL-P-5514	ANA Bul 438	AMS-7274	- - -	Primary use-recip engines and propellers
AN123951 through AN124050	Seal, O-ring	Static and dynamic	Fuel	MIL-P-5514	ANA Bul 438	AMS-7270	- - -	Primary use-recip engines and propellers
MS9021	Packing, O-ring	Static and dynamic	Fuel	MIL-P-5514	ANA Bul 438	AMS-7271	- - -	- - -
MS28772	Packing, O-ring	Landing gear shock strut as rod seal only	Hyd	MIL-P-5514	ANA Bul 438	MIL-P-5516	QPL-5516	- - -
MS28775	Packing, O-ring	Static and dynamic	Hyd (MIL-H-5606), pneu	MIL-P-5514	ANA Bul 438 TO 42E2-1-2	MIL-P-25732	QPL-25732	General use -65°F to +275°F
MS29513	Packing, O-ring	Static and dynamic	Fuel	MIL-P-5514	ANA Bul 438	MIL-P-5315	QPL-5315	- - -
MS29561	Packing, O-ring	Static and dynamic	Hyd, syn lubricant, pneu	- - -	ANA Bul 438	MIL-P-7362	QPL-7362	- - -
M83461/1	Packing O-ring	Static and dynamic	Hyd, (MIL-H-5606 & 83282), pneu	- - -	- - -	MIL-P-83461	QPL-83461	Improved performance at 275°F over MS28775
	O-RINGS FOR FLARED TUBE FITTINGS							
MS9020	Seal, O-ring	Flared tube bosses	Fuel	AND-10064	ANA Bul 438	AMS-7271	- - -	- - -
MS28778	Packing, flared tube	Flared tube bosses	Hyd, pneu	AND-10064	- - -	MIL-G-5510	QPL-5510	Replaces AN6290
MS29512	Gasket, O-ring	Flared tube bosses	Fuel res	AND-10064	ANA Bul 438	MIL-P-5315	QPL-5315	- - -
	NONEXTRUSION RINGS							
MS9058	Ring	Teflon backup for use with MS28778 O-ring gaskets in flared tube bosses	All	AND-10064	- - -	AMS-3651	- - -	- - -
MS28774	Retainer single turn	Teflon backup for use with AN6227, AN6230, MS28775, and MS29561	All	MIL-P-5514	- - -	MIL-R-8791	None	- - -
MS28777	Ring	Leather back-up for use with flared tube bosses	All	AND-10064	- - -	MIL-R-5521	QPL-5521	Replaces AN6281

Figure 1-35. Application of O-Rings and Gaskets (Sheet 1 of 2)

NUMBER	NAME	APPLICATION	SYSTEM	PUBLICATION GOVERNING DESIGN INSTAL-LATION	PUBLICATION GOVERNING STORAGE AND USE	IDENTIFI-CATION	PROCU-REMENT SPECIFI-CATION	QUALIFIED PRODUCTS LIST	REMARKS
NONEXTRUSION RINGS (Cont.)									
MS28782	Retainer	Teflon backup for use with AN6227 and MS28775	All	MIL-P-5514	- - -	- - -	MIL-R-8791	None	In process of replacing AN6246
MS28783	Ring	Teflon backup for use with AN6230 and MS28775	All	MIL-P-5514	- - -	- - -	MIL-R-8791	None	Replaces AN6244
MS35803	Retainer	Leather	All	- - -	- - -	- - -	- - -	- - -	- - -

Figure 1-35. Application of O-Rings and Gaskets (Sheet 2 of 2)

TUBE SIZE	FITTING DASH NO.	AN6290 (MS28778)			AN6227		
		DASH	ID	W	DASH	ID	W
1/8	2	2	0.239	0.064	5	0.239	0.070
3/16	3	3	0.301	0.064	6	0.301	0.070
1/4	4	4	0.351	0.072	7	0.364	0.070
5/16	5	5	0.414	0.072	8	0.362	0.103
3/8	6	6	0.468	0.078	9	0.424	0.103
1/2	8	8	0.644	0.087	12	0.612	0.103
5/8	10	10	0.755	0.097	14	0.737	0.103
3/4	12	12	0.924	0.116	17	0.859	0.139
1	16	16	1.171	0.116	22	1.171	0.139
1-1/4	20	20	1.475	0.118	28	1.475	0.210
1-1/2	24	24	1.720	0.118	30	1.725	0.210
1-3/4	28	28	2.090	0.118	33	2.100	0.210
2	32	32	2.337	0.118	35	2.350	0.210

Figure 1-36. O-Ring Dimensions

resent size increments, but must be chosen according to the required ID and the cross sectional width of the groove dimension.

1-216. AN6227 O-rings can be identified by two or three colored dots on the outer diameter, the number and color of the dots varying between manufacturers. They are supplied in buna-N material. Rectangular grooves, as established in Specification MIL-P-5514, must be used for AN6227 O-ring installation. Care must be taken not to scratch or nick the O-ring. Lubrication compatible with the system should be employed. AN6227 O-rings are not dimensionally the same as AN6290 O-rings in comparable sizes, and AN6227 O-rings are not acceptable substitutes for AN6290 O-rings in tube fitting applications.

1-217. CHAMFERS. A very important detail in the design of an O-ring installation is the entering chamfer (figure 1-38). It ensures proper assembly of the O-ring. In cases where the installation of an O-ring requires that it pass over holes or openings in the bore during assembly, an internal chamfer is necessary to prevent pinching and cutting. Figure 1-39 illustrates the type and magnitude of the chamfer for this application. This design is to be used only for ease of assembly and the prevention of O-ring damage during assembly. It is not to be construed as an example of an O-ring application in which the O-ring passes over holes, counter-bores, shoulders, or other interruptions in the sealing surfaces. Such applications will result in excessive extrusions of the O-ring into the area of increased

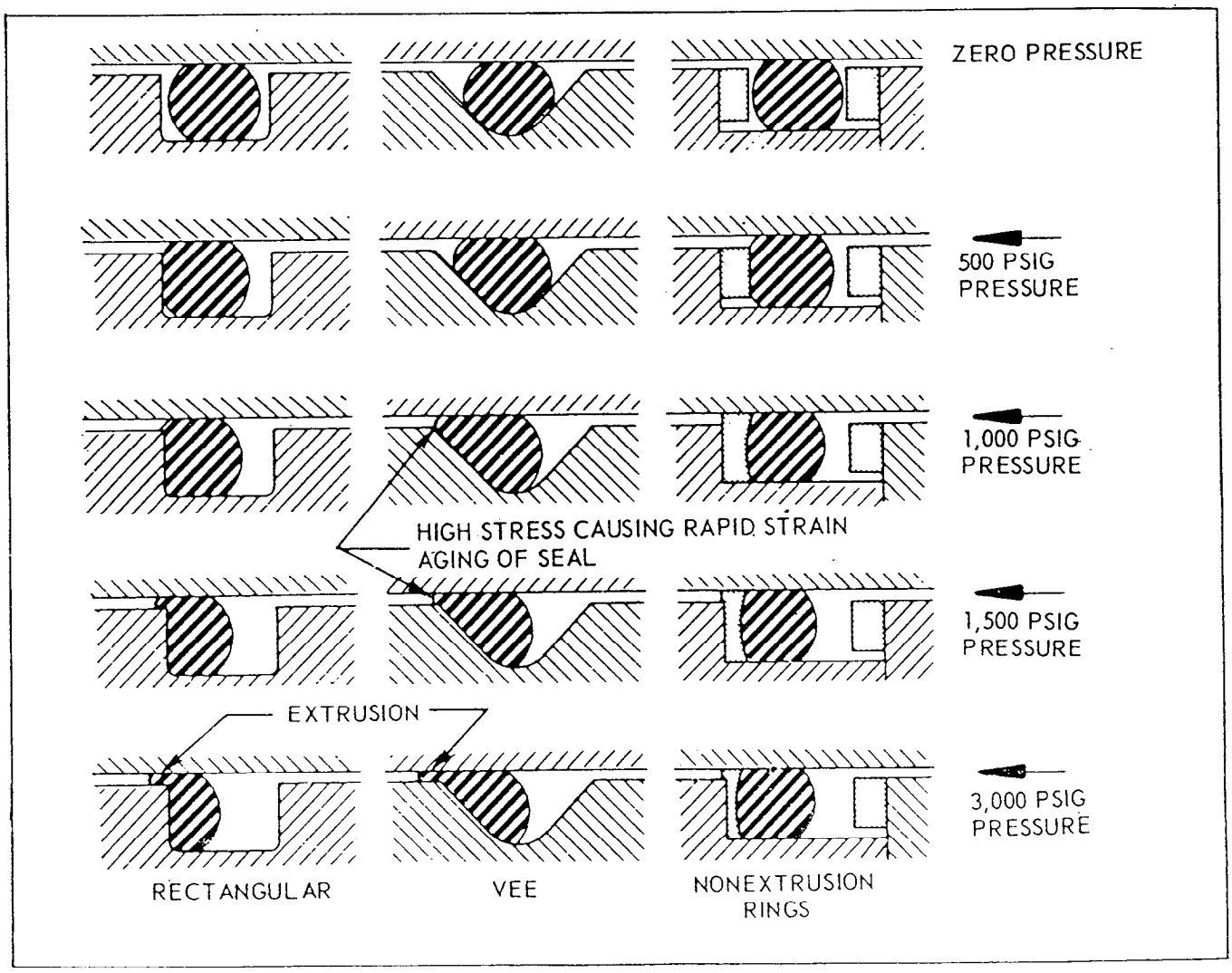

Figure 1-37. O-Ring Extrusion

clearance, allowing the O-ring to be cut or damaged. This will, in a comparatively short time, result in leakage. In severe cases, the O-ring can be completely displaced from the groove and jam the mechanism.

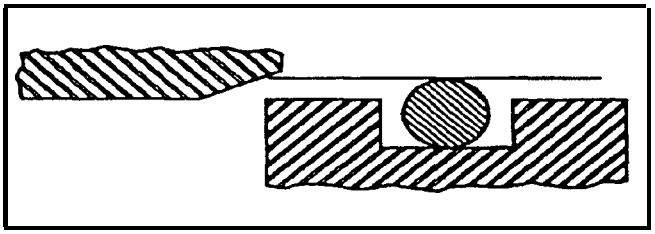

Figure 1-38. Entering Chamfer

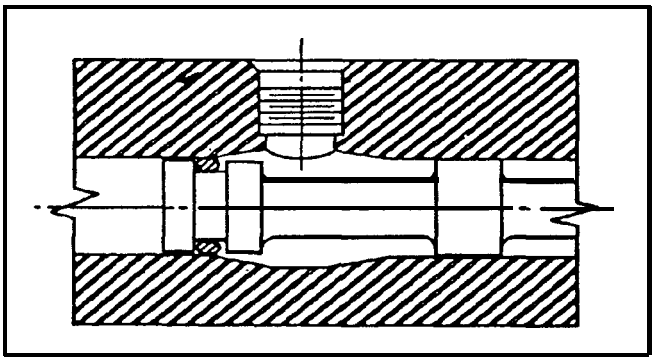

Figure 1-39. Internal Chamfer

1-218. NUMBER OF O-RINGS PER GLAND. Normally, a single gland designed to utilize one O-ring will produce the most satisfactory results. The use of two or more O-rings in adjacent glands can produce pressure traps between the seals. This is the result of hydraulic fluid or pneumatic seal lubricant being trapped between the adjacent O-rings and a subsequent rise in temperature, causing thermal expansion of the fluid or lubricant. This thermal expansion pushes each O-ring into its extruded position which tightens the pressure trap, causing increased friction and further thermal expansion. Such conditions can cause jamming of the units in service. If the use of multiple O-rings is required for some design reason, adequate provisions, such as venting the space between the O-rings, must be made to prevent a pressure trap.

1-219. SURFACE FINISH OF GLANDS. The finish of the surface over which the O-ring seal must slide is an important factor in producing a satisfactory seal. The life of the O-ring used for reciprocating or rotating installations in dependent upon the smoothness of the contacting surface. The surface finishes in figure 1-40 are recommended for use in O-ring installations. These finishes are indicated as surface roughness in microinches root mean square profilometer reading.

1-220. NONEXTRUSION DEVICES. Hydraulic backup rings, in accordance with drawing AN6244, AN6246, MS28774, MS28782, or MS28783, shall be used in conjunction with AN6227, MS28775, and M83461/1 O-rings for moving seals at service pressure from 1,500 psig where desired. Use of the non-extrusion device at such pressure prolongs the normal wearing life of the O-ring. Teflon backup rings have gained widespread usage due to inert properties toward metal, low friction characteristics, and ease of installation.

CAUTION

Make certain that backup rings are compatible with service fluid before installation (paragraph 1-33).

1-221. INSTALLATION OF NONEXTRUSION DEVICES. The use of two backup rings in each gland, one on either side of the O-ring seal, even through the pressure application is from one side only is desired in all cases to relieve service maintenance personnel of the problem of determining which side of the O-ring the teflon or leather belongs. Where it is self-evident, however that pressure can be applied from one direction only and space limitations to provide for two rings create a hardship, a single backup ring may be placed on the side of the O-ring away from pressure. It is desired that backup rings not be stretched at installation, particularly in the small sizes. The leather backup rings shall be used as one continuous ring which shall not be cut. Leather backup rings should be installed with the hair (grain) side of the leather against the O-ring seal and should be lubricated prior to installation.

1-222. LUBRICATION OF HYDRAULIC SYSTEM PACKINGS. Static (non-moving) seals do not require lubrication other than a light film to facilitate assembly. Double-acting, dynamic O-ring seals, such as piston head seals, will alternately receive fluid on each side of the seal and, as a result, will be effectively lubricated. A light film of hydraulic fluid is recommended to facilitate assembly. Single-acting, dynamic O-

PART OR UNIT	SURFACE ROUGHNESS (IN RIMS)
Cylinder bore or piston rod (diameter over which O-ring must slide)	15 Maximum
O-ring groove surface	40 Maximum
Static seals (all parts of gland assembly)	40 Maximum

Figure 1-40. O-Ring Gland Surface Finish

ring seals, such as piston rods or valve plunger seals, will normally receive sufficient lubrication from fluid carried past the seal by the moving element in the course of the functional operation of the component. However, where necessary, single-acting, dynamic O-ring seals shall be lubricated by means of a felt wiper. It is desired that only Specification MIL-H-5606 fluid be used to lubricate seals during installation and assembly of hydraulic components. If other lubrication is necessary, only a light coating of petroleum conforming with Federal Specification VV-P-236 shall be permitted. Copious use of this grease must be avoided.

1-223. Felt wipers shall be used only to provide lubrication. Wherever extended rods are subject to dust, dirt, or other foreign matter, provisions shall be made for cleaning the rod with metal rings in accordance with drawing AN6231 and installing in accordance with drawing AND-10075. The felt wiper conforming to drawing AN6232 shall not be used as means of dirt removal, but shall be augmented with the metal wiper conforming to drawing AN6231. Whenever a felt wiper conforming to drawing AN6232 is used on the same rod as the metal wiper conforming drawing AN6231, the design shall provide for free and unrestrained action of the metal wiper. The two wipers shall not be used in the same groove in such a manner that the metal wiper would be restricted by the compression of the felt.

WARNING

Use of Specification MIL-G-4343 lubricant for packings in oxygen systems constitutes an explosive hazard. See figure 1-4 for suitable lubricant.

1-224. LUBRICATION OF PNEUMATIC SYSTEM PACKINGS. A grease lubricant conforming to Specification MIL-G-4343 is recommended for pneumatic system application. Specification MIL-G-4343 grease must not be used with O-ring seals that have been previously aged or used in hydraulic fluid nor must the grease be used in applications where hydraulic fluid will contact the grease.

1-225. LIMITATIONS OF PNEUMATIC SEAL LUBRICANTS. Tests to date indicate that greases are better lubricants than hydraulic fluid for both running and static seals and are preferable. Running seal applications will function with Specification MIL-H-5606 hydraulic fluid as a lubricant, provided a continuous supply of the fluid is retained on the seal at all times by use of a splash-type well, atomizer, or other similar design suitable to the services. O-rings will abraid, twist, and fail very rapidly if allowed to run dry, and friction under such a condition will become excessive. AN6232 felt wiper rings are recommended over the surfaces on which the seal must slide.

CAUTION

Continuous evaporation of the light ends of Specification MIL-H-5606 fluid can leave a sticky, gummy deposit on the internal surfaces of the unit.

Grease, to be a suitable lubricant, must be compatible with the packing material in respect to injurious effects such as volume swell or shrinkage, decrease in physical properties, etc, and must be suitably heat- and cold-resistant so that softening, flowing, and evaporation does not take place at temperatures up to 160°F (72°C)

and that the grease does not become a solid at -65°F (-54°C). A grease lubricant must be packed into the O-ring groove (running or static) covering the O-ring, and spread lightly on the bearing surfaces before assembly of the pneumatic unit. Dry O-rings should not be assembled into a unit because friction may damage the O-ring. The unit should not be operated through several complete cycles after assembly to spread the grease over all working surfaces. Tests to date have indicated Federal Specification AN-G-3 (obsolete) and Specification MIL-G-3278 greases to be unsuitable due to their injurious effect on O-ring compounds. Specification MIL-L-7711 grease has been entirely suitable at 1,500 psig pneumatic pressure through 50,000 continuous cycles (at 5-1/2 inch strokes) of operation at 120° F (49°C) operating temperature, but will harden and jam solenoid and other low-operating torque units at -65°F (-54°C) temperatures. Grease procured to Specification MIL-G-4343 has proven suitable through these same tests and is much better for cold-temperature operations. In all cases, the Specification MIL-G-4343 grease has operated the 50,000 cycles without the original grease being replenished.

1-226. METAL SEALING RINGS. Metal sealing rings are approved for many applications in which elastomer seals are not suitable. Metal seals can be used at temperatures as low as -350° F and as high as 1200°F, and at pressures from 10-6MM of mercury to 40,000 psig. Metal sealing rings are made for static and dynamic applications and are also made with coatings of Teflon, silver and other metals. Metal rings require a finish of 32 to 5 RMS on the sealing surface contacted by the ring.

1-227. Several types of metal sealing rings are manufactured:

a. Vented hollow O-rings are made by United Aircraft Products, Inc. from 1/32 to 1/4 inch diameter with ring diameters from 1/4 to 40 inches.

b. Rings with an X cross-section are made by E. B. Wiggins Oil Tool Company, with ring diameters of 31 8 to 3 inches.

c. Rings with a U cross-section are made by Haskel Engineering and Supply Company with ring diameters of 1/2 to 6 inches.

1-228. FLANGE -TYPE GASKETS.

1-229. FLAT RING GASKETS. These gaskets are made of a variety of materials, such as paper, cloth, rubber, compressed asbestos, ingot iron, nickel, copper, aluminum, and other metals, as well as combinations of metals and nonmetals. Their thicknesses normally range from 1/64-inch to 1/8-inch. Widths range from 1/4-inch upward; narrow gaskets are preferable since they require lower bolt loads for joint tightness, but they must not be too narrow or the bolt load will crush them, if nonmetal, or indent them into the flange face, if metal. Paper, cloth, and rubber gaskets should not be used for temperatures over 250°F (122°C). Asbestos may be employed up to 650°F (346°C) or somewhat higher, while ferrous or nickel-base metal gaskets are generally satisfactory for the maximum temperature the flange themselves will withstand.

1-230. SERRATED GASKETS. These gaskets are flat metal gaskets having concentric grooves machined into their faces. With the contact area reduced to a few concentric lines, the required bolt load is generally reduced, as compared with an unserrated gasket and, consequently, an efficient joint is obtained for applications where soft gaskets are unsuited. Serrated gaskets are used with smooth-finished flange faces.

1-231. LAMINATED GASKETS. These gaskets are made of metal and soft filler (the filler usually being soft asbestos sheet). In some gaskets (jacketed-type) the laminations are in the plane of the flange face; in others (spiral-wound type), the laminations are formed in an axial or edgewise direction. Laminated gaskets with asbestos fillers are considered suitable for 100°F (38°C) higher temperatures than plain asbestos gaskets, and require less bolt load to compress them than solid metal gaskets, hence tend to make high-pressure, high-temperature joints more efficient than those using flat, solid metal gaskets.

1-232. CORRUGATED GASKETS. These gaskets are the least commonly used type, being intermediate in stiffness between flat nonmetal and metal gaskets. The ridges of the corrugations again tend to concentrate the gasket loading along concentric rings. This type is available

plain, but, to prevent crushing of the corrugations, it is preferable to use the asbestos-filled or asbestos-inserted varieties.

1-233. RING JOINT GASKETS. These gaskets are available in two types, octagonal and oval cross section, both of which are standardized, but the former is considered the superior type. Either may be employed with flat bottom grooves which are now standard. Such rings are nearly always made of metal, usually of the softest carbon steel or iron available. In very high temperatures or severe corrosion service, they may be made of alloy steel; in such usage, they should be heat treated to make them as much softer as possible than the flanges proper. For relatively low temperatures, rings made of plastic may be employed to resist corrosion or insulate the joint from electric currents.

1-234. INDIUM WIRE GASKETS. Indium wire may be used as a temporary gasket in test systems. Do not use indium wire in permanent installations, because the dissimilar metals in contact with each other may cause a hazardous condition.

1-235. THREAD SEALS.

1-236. For list of approval lubricants and thread compounds compatible with oxygen and nitrogen see BSD/SSD Exhibit 62-135 dated 15 August 1962.

1-237. Dryseal pipe threads do not require a sealing material to effect a seal. Most sealing materials actually exhibit lubricating properties, allowing the joint to be brought up tighter and provide a better seal.

1-238. Thread seals are generally classified as hardening or non-hardening. Litharge and glycerin is a common hardening type which effects a good seal, but is almost impossible to break once it hardens. Two of the non-hardening types are TFE (Teflon) paste or tapes.

NOTE

Teflon tape, Specification MIL-T-27730, or other LOX compatible thread sealant, shall be used in oxygen systems.

1-239. The teflon tape or dispersion-type thread seal has come into universal application in missile systems. As indicated in figure 1-4, this material is suitable for most applications.

NOTE

Teflon tape will not prevent galling of type 300 stainless steel tapered threads. Etch the male threads with acid and tin with soft lead solder without flux.

1-240. DIAPHRAGMS.

CAUTION

When selecting a diaphragm for use in pressure systems, make certain that materials used in fabrication of the diaphragm are compatible with the service fluid (paragraph 1-32).

1-241. A diaphragm is a dividing membrane. It spans the gap between two chambers to prevent an interchange of fluid or gas. There are two types of diaphragms: those that act as a separator between two fluids, and those that act as a sealing device between stationary and moving members and usually transmit a force or pressure. An example of the first type is shown in figure 1-41. This diaphragm is not subjected to pressure or stress since it acts only as a separator between two fluid chambers. Those of the second type are dynamic diaphragms used as sealing membranes and force transmitters and constitute the most often used group. They function in the same manner as a sliding-contact packing and may be separated into two groups: flat type and rolling type.

1-242. FLAT DIAPHRAGMS. Flat diaphragms do not remain flat during their working cycle but at distorted by convolutions formed by fluid pressure. This distortion requires an elongation of the cord length of the fabric. Although flat diaphragms are usually made of flexible material, their design should avoid elongation during the working stroke. This can be accomplished by the use of convolutions which allow the diaphragm to flex rather than stretch. Although diaphragms are usually made of fabric impregnated with an elastomeric sealant of synthetic rubber and will withstand flexing indefinitely, stretching may cause fatigue failures.

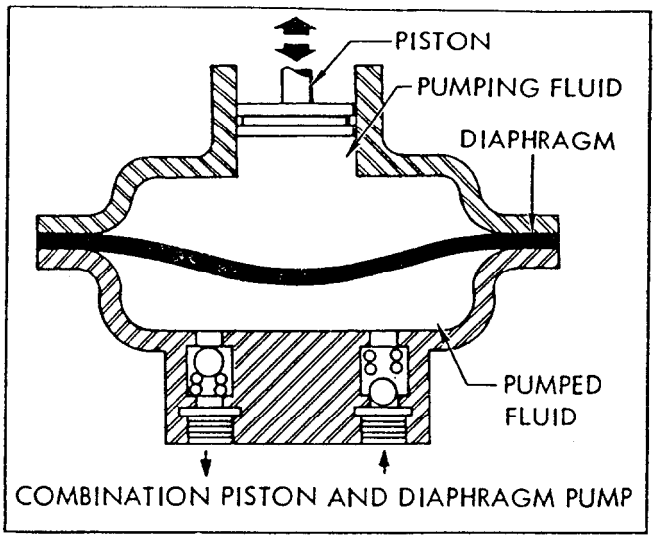

Figure 1-41. Flat Diaphragm Used As Separating Membrane

1-243. When selecting a flat diaphragm for service, the following factors should be considered:

a. Length of stroke.
b. Pressure.
c. Area shift.
d. Material compatibility with service fluid.

1-244. Light-duty diaphragms are sometimes made perfectly flat, and stretching of the diaphragm material during operation is then unavoidable. Maximum available stroke is usually seven to nine percent of the diameter. Heavy-duty, flat diaphragms have molded-in convolutions that allow the diaphragm to flex without stretching. Length of stroke (travel) available on convoluted diaphragms (figure 1-42) is approximately twice convolution height. Travel available on dished diaphragms is approximately twice the dish height. There are practical limits to how large the dish or convolution can be; if convolutions are higher than diaphragm thickness, molding difficulty increases. Dished diaphragms are usually proportioned 1/4-inch height to 1-inch diameter.

1-245. The diaphragm's ability to withstand pressure depends on its design and material. Its tensile strength is more dependent on fabric than on elastomer. Tensile strength is also affected by the resilience of the diaphragm. A resilient material will elongate more with a given load, causing a reduction in the cross-sectional area and lowering pressure-bearing ability. Amount of curvature affects diaphragm strength, as greater curvature will withstand higher pressure. A full

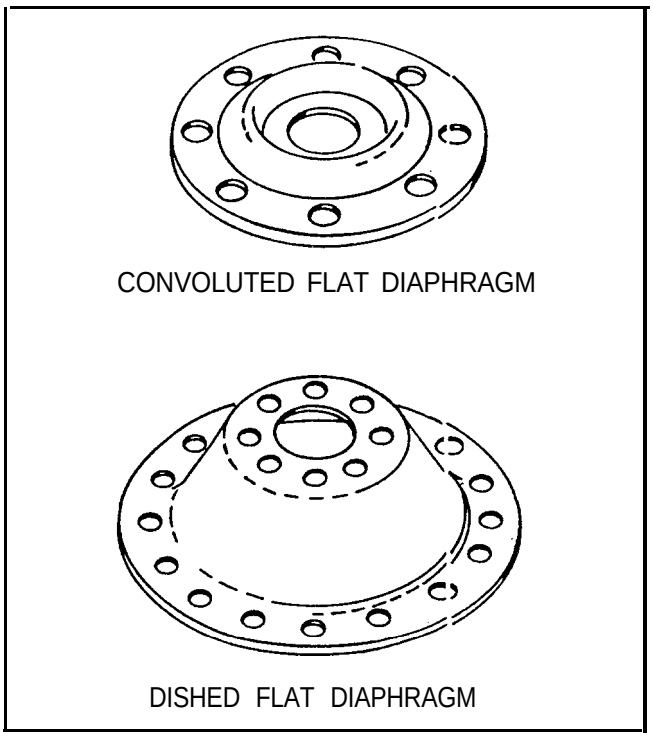

Figure 1-42. Flat Diaphragms

semicircular convolution with a 180-degree curve is the optimum shape. The partial convolution formed in flat diaphragms is approximately 60 degrees. Fabric stress in a 60-degree convolution is twice that in a 180-degree convolution.

1-246. The effective pressure area of a flat diaphragm is greater at the two ends of its stroke than at its center. Thus, devices that rely on proportionate displacement cannot use a flat diaphragm. The area of any fabric and elastomer diaphragm will be held constant over its working stroke only if the unsupported area of the diaphragm maintains a true semicircular cross-section at the bottom of the convolution. The convolution formed in flat diaphragms by pressure reaction, being only a partial semicircular cross-section in the mean stroke position, changes to a straight line configuration at both top and bottom of the stroke. Such variations in the configuration of the unsupported wall are reflected in the effective pressure area.

1-247. ROLLING DIAPHRAGMS. Rolling diaphragms resemble long-travel bellows or radially sealed hydraulic pistons. Rolling diaphragms are useful in the following circumstances:

a. If very low hysteresis loss is required.

b. If high break-out friction is objectionable, or moving friction must be kept low.

c. If metal bellows are undesirable because of spring gradient or inability to obtain required stroke.

d. If response to slight pressure variations is required.

e. If leakage in cylinders or actuators is objectionable, or if the fluid or gas contains abrasive particles.

The rolling diaphragm has a full 180-degree convolution. Pressure in the loading chamber (A, figure 1-43) forces the piston down, and causes the diaphragm to roll off the piston wall onto the cylinder wall (B, figure 1-43). The entire pressure load is thus supported by the piston head. Contained pressure holds the rolling diaphragm against the cylinder walls and piston.

1-248. Rolling diaphragms cannot be used if pressure on the low-pressure side at any time exceeds by more than 10 psig pressure on the high-pressure side. Pressure reversal may cause sidewall distortion, over-stressing, or scuffing (figure 1-44). Multiple pleats caused by pressure reversal will not be corrected by application of pressure on the high-pressure side, and operation with pleats will result in early failure. Special rolling diaphragms are available which will not create multiple pleats under pressure reversals.

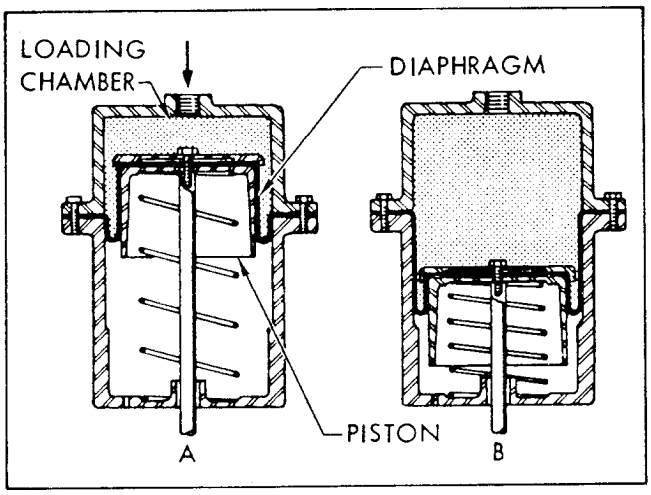

Figure 1-43. Rolling Diaphragm Operation

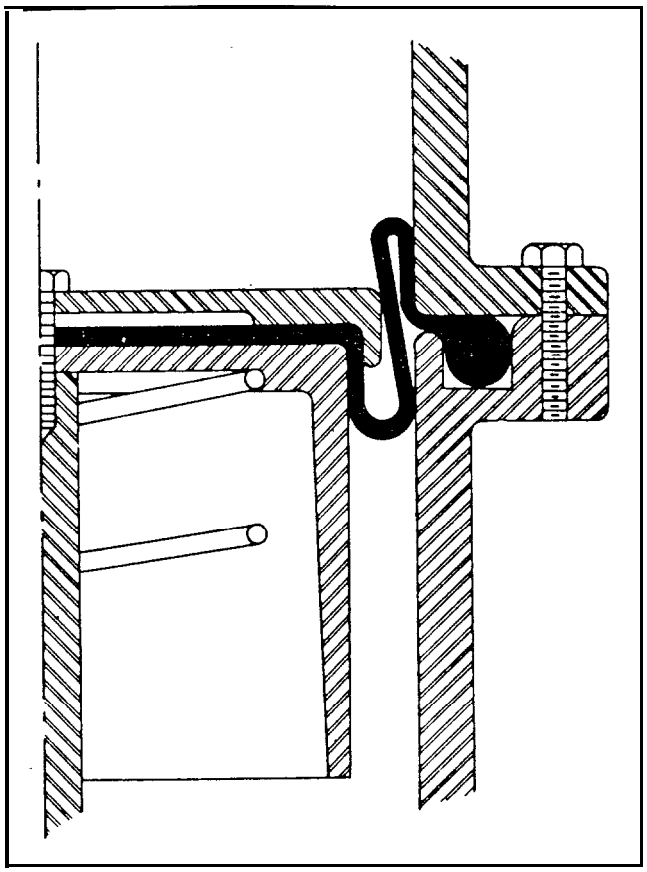

Figure 1-44. Rolling Diaphragm Scuffing Action

1-249. There are two basic types of rolling diaphragms: the top-hat type, in which the convolution is formed by hand during installation, and the class-C type, with molded convolutions. The latter usually has less stroke capability than the former. Each of the two types is available in four separate rim configurations that have been arbitrarily grouped into classes (figure 1-45). These classes are identical, except for the C after the class-C type number.

1-250. The top-hat type rolling diaphragm requires inversion during installation to form the convolution. Resiliency may cause the diaphragm to revert to its original position, resulting in sidewall scrubbing (figure 1-46). Use of retainer plates with curved lips prevents such reversion.

1-251. Piston and cylinder eccentricity affects convolution width. The piston shaft must be guided, as eccentricity should not exceed ten percent of convolution width. If the piston shaft is subjected to torque during assembly, a rotating slip joint should be used to prevent turning action from wrinkling the diaphragm. Twist may

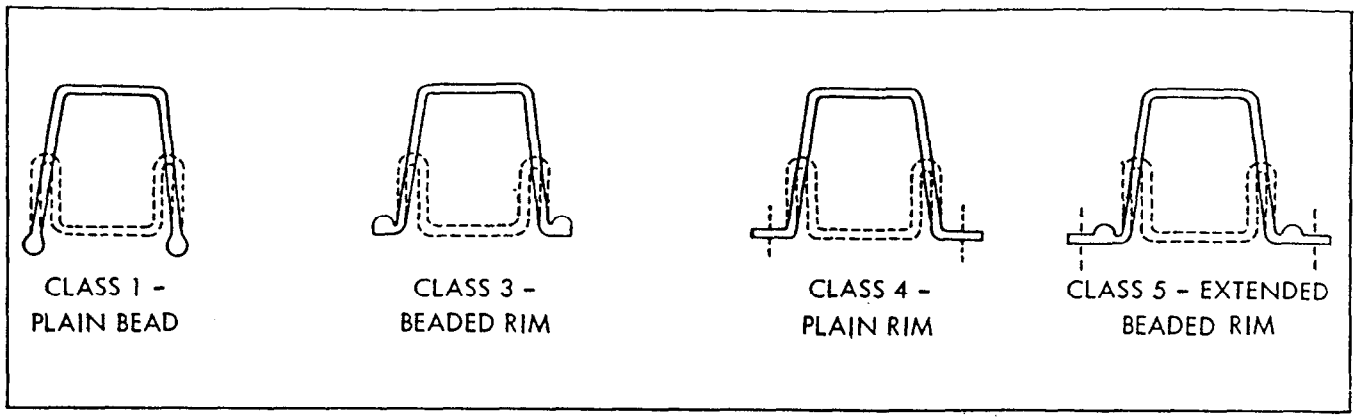

Figure 1-45. Rolling Diaphragm Rim Configuration Classes

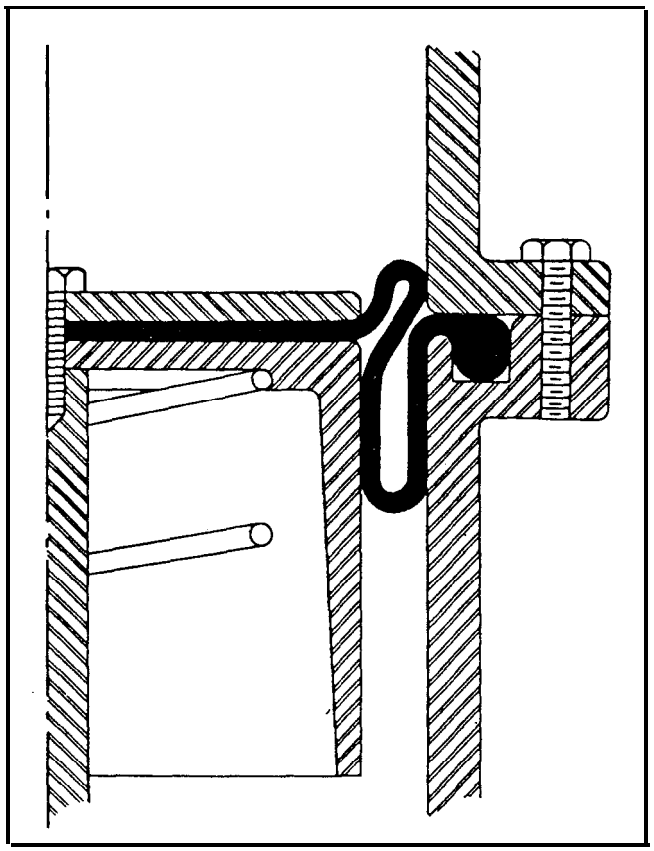

Figure 1-46. Rolling Diaphragm Sidewall Scrubbing Action

also be applied to the piston by return springs. If twisting effect is greater than two degrees, one end of the spring should be supported on a ball-bearing thrust plate.

1-252. Selection of diaphragm material involves both fabric and elastomer. Fabrics commonly used are cotton, dacron, nylon, teflon, or fiberglass.

1-253. Cotton is the most expensive diaphragm material. Because cotton yarn is formed from short lengths of fiber, its tensile strength is not as high as that of filament yarn. Cotton should not be used at temperatures exceeding 250°F (122°C).

1-254. Dacron fabric diaphragms are used at temperatures up to 350° F (178°C) without loss of tensile strength. Dacron filaments can be treated to increase tensile strength to a degree just below that of nylon.

1-255. Nylon fabric diaphragms are used at temperatures up to 300° F (150°C). Nylon possesses excellent tensile strength. Flange creep, due to its high elasticity, makes it unsuitable for some high-pressure use.

1-256. Fiberglass fabric diaphragms are often used if temperatures exceed 350° F (178°C). When coated with high-temperature elastomers, they will withstand 700° F (374°C) for limited periods. Fiberglass filaments abrade during flexing, and therefore, when used in diaphragms, must be treated with high-temperature lubricants.

1-257. Teflon fabric can be used in temperatures up to 400°F (206°C), if tensile stress is low. Where fiberglass cords are used in combination with teflon, the teflon forms a lubricating barrier between the glass filaments.

1-258. Diaphragm fabrics are impregnated with an elastomer for impermeability. If the elastomer is porous, or if the center hole in the diaphragm is not sealed off, wicking of the fluid through the diaphragm will occur. The elastomer used in the diaphragm must be compatible with the required service fluid (figure 1-4).

1-259. FLEX HOSE.

CAUTION

Hose with an oil or carbon content greater than 6 percent by weight will not be used on oxygen equipment.

1-260. GENERAL REQUIREMENTS.

1-261. Flex hose generally conforms to Military or industrial specifications. A minimum safety factor of 4 to burst is required unless otherwise specified in the governing code, Hose of four general types are available: rubber, teflon, high density polyethelene and metal.

1-262. RUBBER HOSE. This type is most commonly used in hydraulic, pneumatic, fuel, and instrument air services. Flex rubber hose and hose assemblies are conveniently classified as low-, medium-, high-, and superhigh-pressure, depending on the type of construction. Low-pressure flex hose is constructed with single cottonbraid reinforcement and an inner and outer tube of synthetic rubber. Medium-pressure hose is constructed with a single wire braid reinforcement. High-pressure hose has a multiple wire braid reinforcement. Superhigh-pressure hose is constructed of combinations of braid and spiral wrap wire reinforcement or multiple layers of spiral wrap. Standard rubber hose and assemblies are listed in figures 1-47 and 1-48. The service temperature is generally listed at from -65° to + 165°F (-54° to + 74°C) for standard rubber hose, with a 275°F (133°C) maximum for some special types. Operation outside the recommended range will result in failure from brittleness at lower temperatures and life reduction or failure at higher temperatures. Suppliers' tables should be consulted for specific usage of industrial hose.

CAUTION

Rubber hose will not be used in cryogenic systems.

1-263. TEFLON HOSE. Although the requirements for medium and high pressure teflon and the requirements for medium and high pressure rubber are basically the same, the teflon hose has some advantages. These advantages are: (1) There is no shelf life on teflon hose, (2) there is no time change on medium pressure teflon hose, and (3) teflon is chemically inert. The only disadvantages are the higher cost and possibility of cold flow at fittings. The hose is generally classified in the medium pressure range (3,000 psig maximum). The service temperature is generally listed at from -65° to + 450°F (-54° to +234°C). This hose should be specifically identified to avoid confusion with the metal hose with a wider service temperature range. The suppliers' tables list the maximum working pressures for the various sizes and pressure classifications.

1-264. METAL HOSE. High-pressure systems operating at high or extremely low temperatures and with corrosive fluids utilize metal-type hose. The metal hose inner core consists of helical or annular convolutions of stainless, copper, or other corrosion-resistant materials. The inner core is covered with braiding to absorb the load from the core. The service temperature range is from -320° to +1,000°F (-197° to +542°C) for 18-8 stainless steel type hose. Suppliers' tables should be consulted for specific usage of each type of hose.

1-265. HIGH DENSITY POLYETHYLENE. This type hose is designed for use as a component of high pressure pneumatic ground support equipment used in aircraft and missile servicing applications. This hose is available in two pressure ranges: 4,000 psig (Specification MIL-H-26666) and 8,500 psig (Specification MIL-H-27462). The service temperature range is -65° to +160°F. The inner tube consists of a high density polyethylene compound of seamless construction and uniform gauge. It is constructed so as to permit the least possible effusion of compressed gases. Its disadvantages are cold flow at fittings and cost.

1-266. REUSABLE FLEX HOSE FITTINGS. The reusable or detachable end fitting offers several advantages to the flex hose user. Hose and end fittings can be stocked in bulk. This makes it possible for the user to manufacture hose assemblies with hand tools, as they are required. However, local manufacture of all types and

NOM TUBE DIA	HOSE ID	HOSE OD	PART OR SPECIFICATION*** NUMBER HOSE	HOSE ASSEMBLY	END FITTING	MAX SYSTEM OPERATING PRESSURE (PSIG) FUEL	OIL	HYD OR PNEU	INST AIR	MIN RAD BEND
1/8	1/8	3/8	MIL-H-5593-2	AN6270-2	AN773-2				300	2
3/16	3/16	7/16	MIL-H-5593-3	AN6270-3	AN773-3			20	250	2
	1/8	19/64	MIL-H-8794-3	MS28741-3	MS28740-3	1,000	50	2,000*		3
	1/4	5/8	MIL-H-6000			250	250			3
1/4	1/4	1/2	MIL-H-5593-4	AN6270-4	AN773-4			20	200	4
	3/16	33/64	MIL-H-8794-4	MS28741-4	MS28740-4	1,000	50	3,000**		3
	7/32	5/8	MIL-H-8788-4	MS28759-4	MS28760-4			3,000		3
	0.240	27/32	MIL-H-27462					8,500		6
	0.212	0.703	MIL-H-76616			250	250	4,000		3-1/4
	5/16	11/16	MIL-H-6000			250	250			3-3/4
5/16	1/4	37/64	MIL-H-8794-5	MS28741-5	MS28740-5	1,000	50	3,000**		3-3/8
	9/32	45/64	MIL-H-8788-5	MS28759-5	MS28760-5			3,000		3-3/8
	3/8	3/4	MIL-H-6000			250	250			4-1/2
3/8	3/8	5/8	MIL-H-5593-6	AN6270-6	AN773-6			20	150	4
	5/16	43/64	MIL-H-8794-6	MS28741-6	MS28740-6	1,000	50	2,000		4
	0.298	0.859	MIL-H-26666					4,000		5-1/4
	11/32	49/64	MIL-H-8788-6	MS28759-6	MS28760-6			3,000		5
	0.365	1	MIL-H-27462					8,500		7
	1/2	7/8	MIL-H-6000			250	250			6
	1/2	25/32	MIL-H-5593-8	AN6270-8	AN773-8			20	125	6
1/2	0.480	1-5/8	MIL-H-27462					8,500		9
1/2	13/32	49/64	MIL-H-8794-8	MS28741-8	MS28740-8	1,000	50	2,000		4-5/8
	0.341	1.000	MIL-H-26666					4,000		6
	7/16	55/64	MIL-H-8788-8	MS28759-8	MS28760-8			3,000		5-3/4
	5/8	1	MIL-H-6000			250	250			7-1/2
5/8	0.485	1.125	MIL-H-26666							
5/8	5/8	29/32	MIL-H-5593-10	AN6270-10	AN773-10			20	125	6
	1/2	59/64	MIL-H-8794-10	MS28741-10	MS28740-10	1,000	50	1,750		5-1/2
	9/16	1-1/32	MIL-H-9788-10	MS28759-10	MS28760-10			3,000		6-1/2
	3/4	1-1/8	MIL-H-6000			250	250			9
3/4	0.602	1.312	MIL-H-26666					4,000		8
3/4	5/8	5-5/64	MIL-H-8794-12	MS28741-12	MS28740-12	1,000	50	1,500		6-1/2
	11/16	1-7/32	MIL-H-8788-12	MS28759-12	MS28760-12			3,000		7-3/4
7/8	7/8	1-1/4	MIL-H-6000			250	250			10-1/2
	1	1-3/8	MIL-H-6000			250	250			12
1	7/8	1-15/64	MIL-H-8794-16	MS28741-16	MS28740-16	750	50	800		7-3/8
	7/8	1-1/2	MIL-H-8788-16	MS28759-16	MS28760-16			3,000		9-5/8
1-1/8	1-1/8	1-5/8	MIL-H-6000			200	200			13-1/2
1	1-1/4	1-3/4	MIL-H-6000			200	200			15
	1-1/8	1-1/2	MIL-H-8794-20	MS28741-20	MS28740-20	500	50	600		9
1-3/8	1-3/8	1-7/8	MIL-H-6000			200	200			16-1/2
1-1/2	1-1/2	2	MIL-H-6000			200	200			18
	1-3/8	1-3/4	MIL-H-8794-24	MS28741-24	MS28740-24	250	50	500		11
1-5/8	1-5/8	2-1/8	MIL-H-6000			200	200			19-1/2
1-3/4	1-3/4	2-1/4	MIL-H-6000			150	150			21
	2	2-1/2	MIL-H-6000			150	150			24
2	1-13/16	2-7/32	MIL-H-8794-32	MS28741-32	MS28740-32	200	50	350		13-1/4

* Not to be used in hydraulic systems.
** Not to be used if dynamic impulse exceeds 3750 psig. Use MS28759-4 and MS28759-5 hose assemblies for applications exceeding 3750 psi.
*** All specifications shall be the latest revision.

Figure 1-47. Standard Military Specification Flexible Hose

TYPICAL (SAE TYPE) INDUSTRIAL HOSE															
	MEDIUM-PRESSURE SINGLE-WIRE BRAID			HIGH-PRESSURE DOUBLE-WIRE BRAID			HIGH-PRESSURE 2 SPIRAL AND 1 WIRE BRAID			HIGH-PRESSURE 4 SPIRAL			SUPERHIGH-PRESSURE 6 SPIRAL		
HOSE ID (INCHES)	MAX WORK-ING PRESS. (PSIG)	BURST PRESS. (PSIG)	MIN BEND RADIUS (INCHES)	MAX WORK-ING PRESS. (PSIG)	BURST PRESS. (PSIG)	MIN BEND RADIUS (INCHES)	MAX WORK-ING PRESS. (PSIG)	BURST PRESS. (PSIG)	MIN BEND RADIUS (INCHES)	MAX WORK-ING PRESS. (PSIG)	BURST PRESS. (PSIG)	MIN BEND RADIUS (INCHES)	MAX WORK-ING PRESS. (PSIG)	BURST PRESS. (PSIG)	MIN BEND RADIUS (INCHES)
3/16	3,000	12,000	3												
1/4	2,500	10,000	3-3/8	4,500	18,000	4	7,000	28,000	4	8,750	35,000	5	11,250	45,000	5
5/16	2,250	9,000	4												
3/8				3,500	14,000	5	5,500	22,000	5	7,500	30,000	6	10,000	40,000	6
13/32	2,000	8,000	4-5/8												
1/2	1,750	7,000	5-1/2	3,000	12,000	7	5,000	20,000	6	6,250	25,000	8	7,500	30,000	8
5/8	1,500	6,000	6-1/2												
3/4				2,250	9,000	9-1/2	4,000	16,000	9-1/2	5,000	20,000	10	6,250	25,000	10
7/8	800	3,200	7-3/8												
1				1,875	7,500	11	3,250	13,000	12	4,000	16,000	12	5,000	20,000	12
1-1/8	625	2,500	9												
1-1/4				1,625	6,500	16	2,500	10,000	16-1/2	3,000	12,000	18	3,500	14,000	18
1-3/8	500	2,000	10-1/2												
1-1/2				1,250	5,000	20	2,250	9,000	20	2,500	10,000	22	3,000	12,000	22
1-13/16	350	1,400	13-1/4												
2				1,000	4,000	22	2,000	8,000	25	2,500	10,000	27	3,000	12,000	27

Figure 1-48. Standard Industrial Flexible Hose

configurations of hose assemblies is not authorized. The applicable hose specification should be consulted to determine if local manufacture is permissible. When using 3/8-inch I.D. or smaller hose for low pressure (250 P.S.I. or less) applications, the use of Imperial -Eastman Type C4 hose or equal with Imperial-Eastman series FN reusable couplings or equal is permissible.

1-267. The crimping and swaging pressures of spiral wrap superhigh-pressure flex hoses exceed those used on wire-braid type hose. Two-piece, screw-type reusable hose fittings are available for the two-spiral, one-braid hose. Clamp-type hose fittings are required for four- and six-spiral types.

1-268. PRESSURE GAGES.

1-269. CONSTRUCTION. In all gauge designs some type of bourdon device is used to translate pressure into mechanical motion. U shaped and helical capillary bourdons are the two most prevalent types. In the former, unequal expansion of the bourdon is transmitted by gears and levers to the dial indicator. The helical bourdon is directly coupled to the indicator hand since its expansion produces a rotary moment as it tries to “uncoil”. The latter is used extensively wherever severe vibration is encountered. Neither design is rupture proof although the helical can withstand greater pressures due to its small cross sectional area and relative wall thickness.

1-270. CONSIDERATIONS. Gauges must be considered a vulnerable and relatively weak part of a pressure system. Owing to their construction they seldom attain the desired minimal safety factor of 4, but designs are available which minimize risks to personnel in the event of bourdon failure. The ideal employs a heavy case with an integral wall behind the dial and face. A vent is provided to allow system depressurization away from the expected viewing area. The wall serves to contain pressure and prevent the expulsion of dial and face. This design is considered most desirable for medium and high pressure service and conforms to MIL-G-18997 and MIL-S-901. Another design employs a blowout vent and heavy plastic face or lens. The use of win-

dow glass and blowout vent is the least desirable and should be avoided.

1-271. Gages shall be installed with a minimum of 1/2-inch clearance if a backing plate is used, or, if the gage is installed flush with the backing plate, a hole slightly larger than the blowout disk shall be drilled through the plate in line with the blowout disk.

1-272. Where gages are subjected to surge pressures above the normal range, a pulsation dampener, an orifice plate, or other device shall be installed at the gage inlet connection.

1-273. Gages should be selected with graduations approximately double the average working pressure of the system in the nearest standard range. The gage will last longer and is much easier to read with the pointer near the top center of the dial.

1-274. The Bourdon-tube type gage is available in phosphor bronze, alloy steels, “K” monel, stainless steels, and beryllium copper tube materials. Select the proper material and joint type for the service fluid.

I-275. VALVES AND REGULATORS.

Valve and regulator selection and all repairs and adjustments shall be in accordance with TO 00-25-229.

1-276. GENERAL VALVE RULES.

1-277. The following general rules should be adhered to when valves are selected or operated:

a. All major valve repairs and adjustments must be performed by competent laboratory personnel.

b. Relief valves should be tagged with check dates and must be returned for periodic recalibration. Calibrated relief and reset pressures and the next calibration date shall appear on the tag.

c. High-pressure valves are precision instruments and can be easily damaged by improper handling. They should never be forced.

d. Valves should be used only under the pressure and service conditions stamped on the body. Use valves in service other than specified only after careful consideration of compatibility.

e. Packing gland nuts and flange nuts should not be tightened while the system is pressurized.

f. Safety wires should never be cut and the thermo-dip should never be removed from valves by other than calibration laboratory personnel.

1-278. VALVE TYPES. (Refer to TO 00-25-229 for all valves and regulators.)

1-279. The many and varied pneumatic and hydraulic systems require many types of valves. Each valve type has some characteristics which make it suitable for a particular service. When a valve is chosen for service, consideration must be given to such factors as pressure limitation, temperature, response time, corrosivity of fluids, frequency of use, power source, and reliability. The following descriptions and illustrations represent the most used valves. Refer to TO 00-25-229 for additional information.

1-280. GATE VALVES. The major advantage of a gate valve (figure 1-49) is that it allows unrestricted fluid flow. As the gate valve with its large body cavity around the stem could result in trapping of liquefied gases in the valve, a conversion is necessary in liquefied gas service. The normal metal-to-metal seat seals by a wedging action and hard shutoff forces are not apt to damage the trim.

1-281. Another version of the gate valve is one that utilizes an O-ring seal. The use of the O-ring makes it unusable in liquefied-gas service. This valve is in the 3,000 psig pressure range. Sealing is independent of shutoff forces.

1-282. GLOBE VALVES. One supplier manufactures a globe valve (figure 1-49) which is furnished in a variety of sizes, trim, connections, and operating pressures. Stem packing is normally of chevron teflon or braided teflon. Some valves use metal-to-metal trim, but a metal plug and a teflon seat are more common. Operation of this valve is accomplished by a non-rising

manual handle or by a pneumatic cylinder, either of which can be attached to a basic valve. The current models have two types of pneumatic cylinders. the normally closed (NC) and the normally open (NO), while the older models used the same cylinder and inverted trim in the valve. The pneumatic cylinder is generally limited to 150 psig maximum actuating pressure.

1-283. A popular type of globe valve is the O-ring seat seal. Sealing of the valve is accomplished by an O-ring rather than by the standard trim of plug and seat. Further tightening after the O-ring has entered the seat will cause a metal plug to contact the seat. Tightening beyond this point may result in seat damage, and damage is certain if strong hand pressure is exerted on the valve handle. Damage to the seat causes scuffing of the O-ring during opening and closing with subsequent leakage past the O-ring seal. This valve is available in 1/4-, 3/8, and 1/2-inch sizes for working pressures to 3,000 psig. An O-ring is also used around the stem, eliminating stuffing box difficulties.

1-284. The needle valve (figure 1-49) is a modification of a globe valve and is preferable for high pressures (in excess of 6,000 psig). The stem is tapered to form a plug and the seat is built with a very small plug contact area. This small contact area in the trim results in high seating pressure from a relatively small force on the stem. Any undue force applied to the valve handle will damage the trim. Two-finger shutoff is sufficient for this type of valve.

1-285. SOLENOID VALVES. Solenoid valves (figure 1-50) are actuated by electrical energy. A direct-acting solenoid valve is one in which the opening and closing are controlled directly by the solenoid. A pilot-operated solenoid valve is one in which the solenoid controls the flow of a small portion of the fluid which is used, in turn, to operate the valve. This has the advantage of using less electrical current to operate the smaller solenoid. The pilot-operated valve, however, requires a certain minimum fluid pressure before it will open or close.

1-286. EXPANSIBLE TUBE VALVES. The valve illustrated in figure 1-51, is an example of the expansible tube-type of valve. It is designed to be operated by pressure from the upstream inlet, a solenoid valve being used to control the upstream fluid pressure which actuates the valve. The pressure is equal on both sides of the expansible tube, but greater area is exposed to fluid pressure on the outside surface. The valve will stay closed while control pressure is on. Venting the control pressure allows the tube to expand and the valve to open.

1-287. CHECK VALVES. Check valves (figure 1-51) operate on differential pressure and allow flow in one direction only.

1-288. RELIEF VALVES (BACK PRESSURE REGULATORS). The typical relief valve (figure 1-51) utilizes a preset spring pressure to prevent valve opening. These settings and readjustments must be made by an authorized laboratory. These valves have tolerances of two psig through 70 psig settings and three percent for settings over 70 psig. They must prevent the pressure from rising 10 percent above the maximum working pressure. The trim consists of metal-to-metal, O-ring, or soft-disk type seat and plug combinations.

1-289. One type of relief valve utilizes a small volume regulator body. It is important that these valves be identified, vented to atmosphere, and not used as a regulator in a closed system.

1-290. BURST DIAPHRAGM. The burst diaphragm (figure 1-51) or safety head is a valve used to prevent excessive pressures or to allow flow at a predetermined pressure. The diaphragms are fragile and care must be exercised on installation to prevent creases, bends, or cuts; clamping surfaces must be kept free of dirt or grit. Diaphragms are installed so that the pressure is on the concave side. Since they are rated at a particular temperature (usually 72° F (22°C), the burst pressure must be redetermined for use at other temperatures. Burst diaphragm installation must be supported for recoil. Vent lines must be positioned so that fluids are carried away from personnel. Diaphragms should be periodically replaced, depending on pressure cycles. Those subject to atmospheric conditions should be procured with an approved protective coating, to prevent corrosion. Diaphragms should not be operated at pressures above 66 percent of their burst pressure.

1-291. PRESSURE REGULATOR.

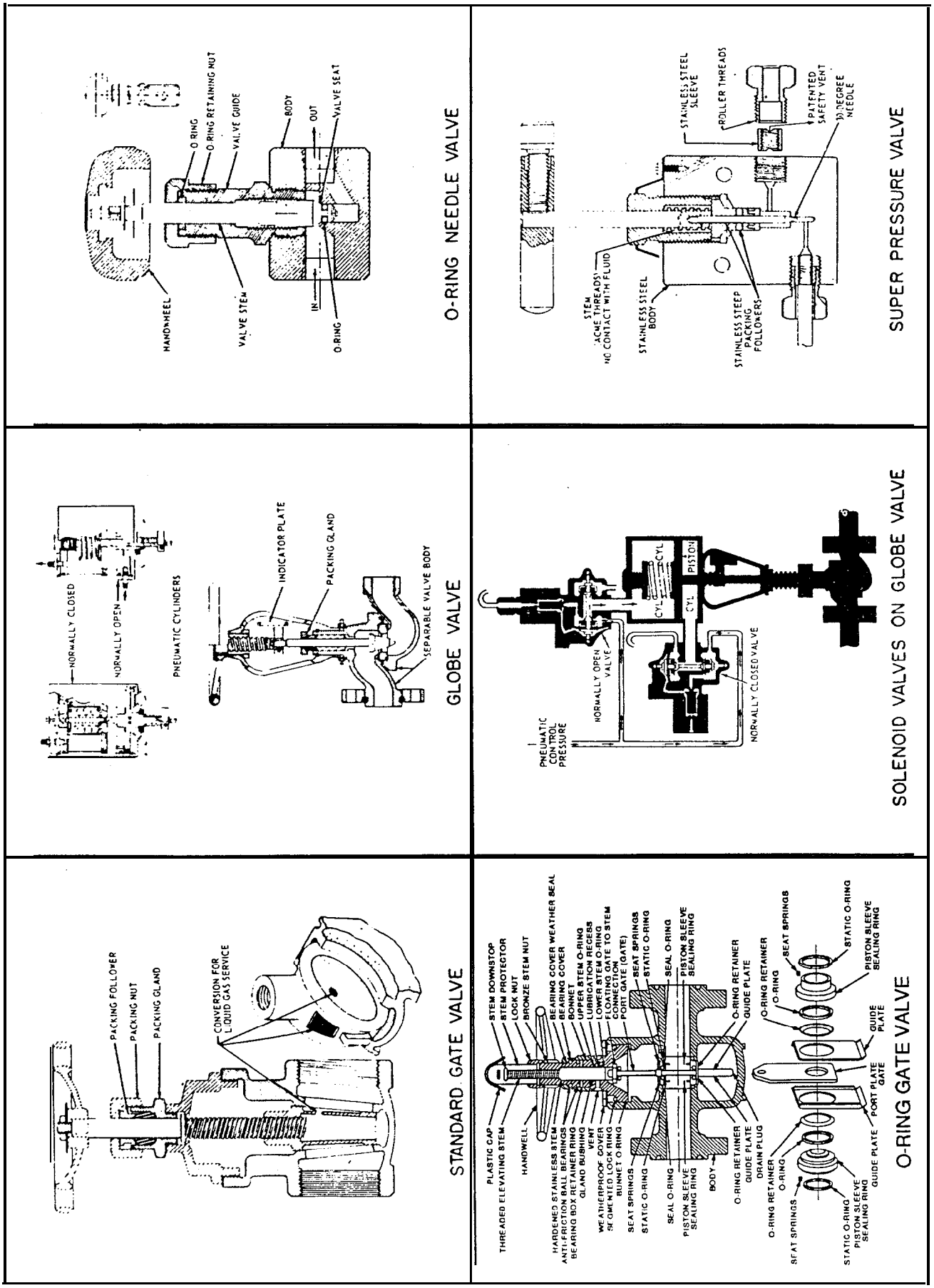

Figure 1-49. Gate, Globe, and Needle Valves

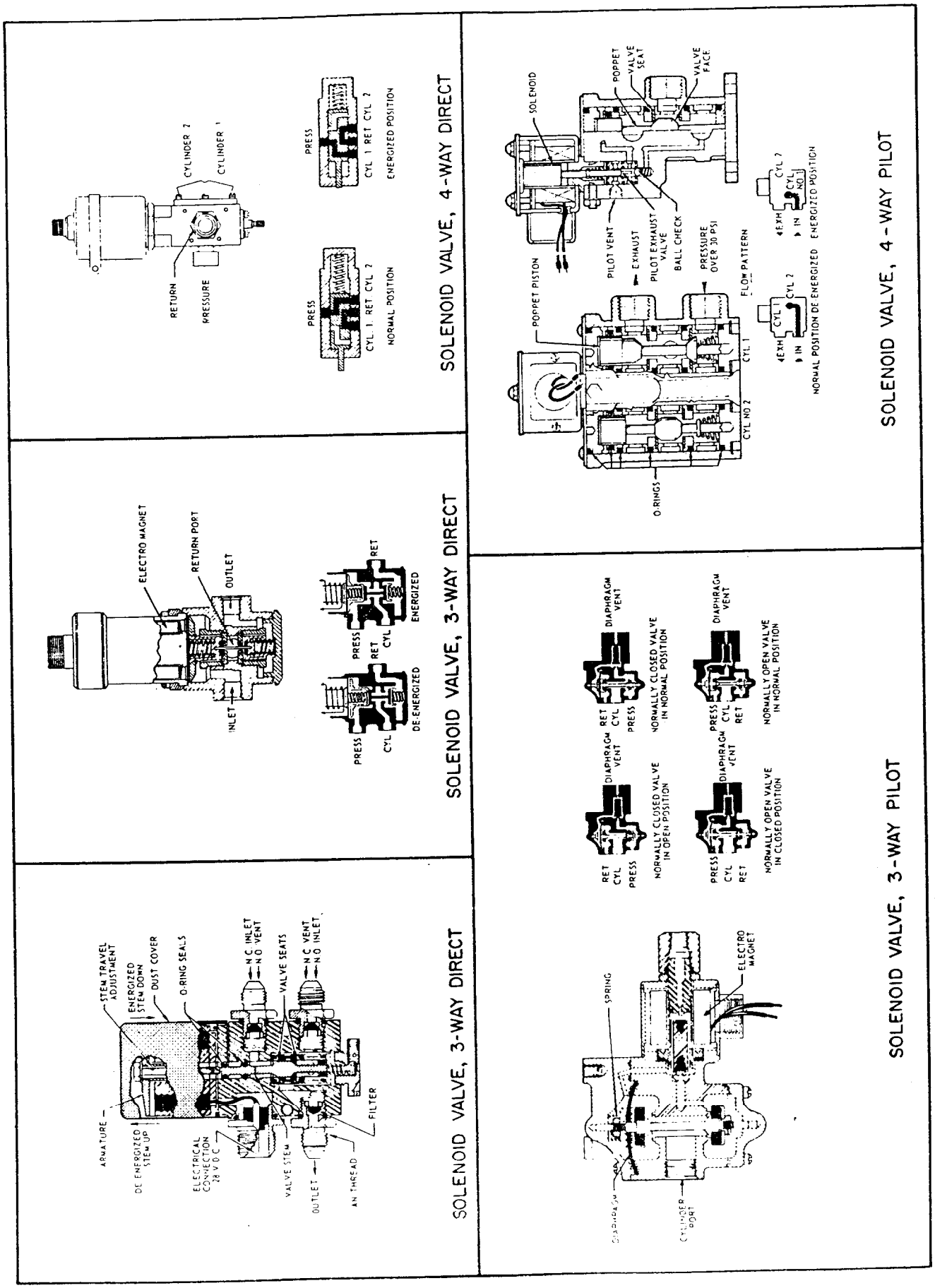

Figure 1-50. Solenoid Valves

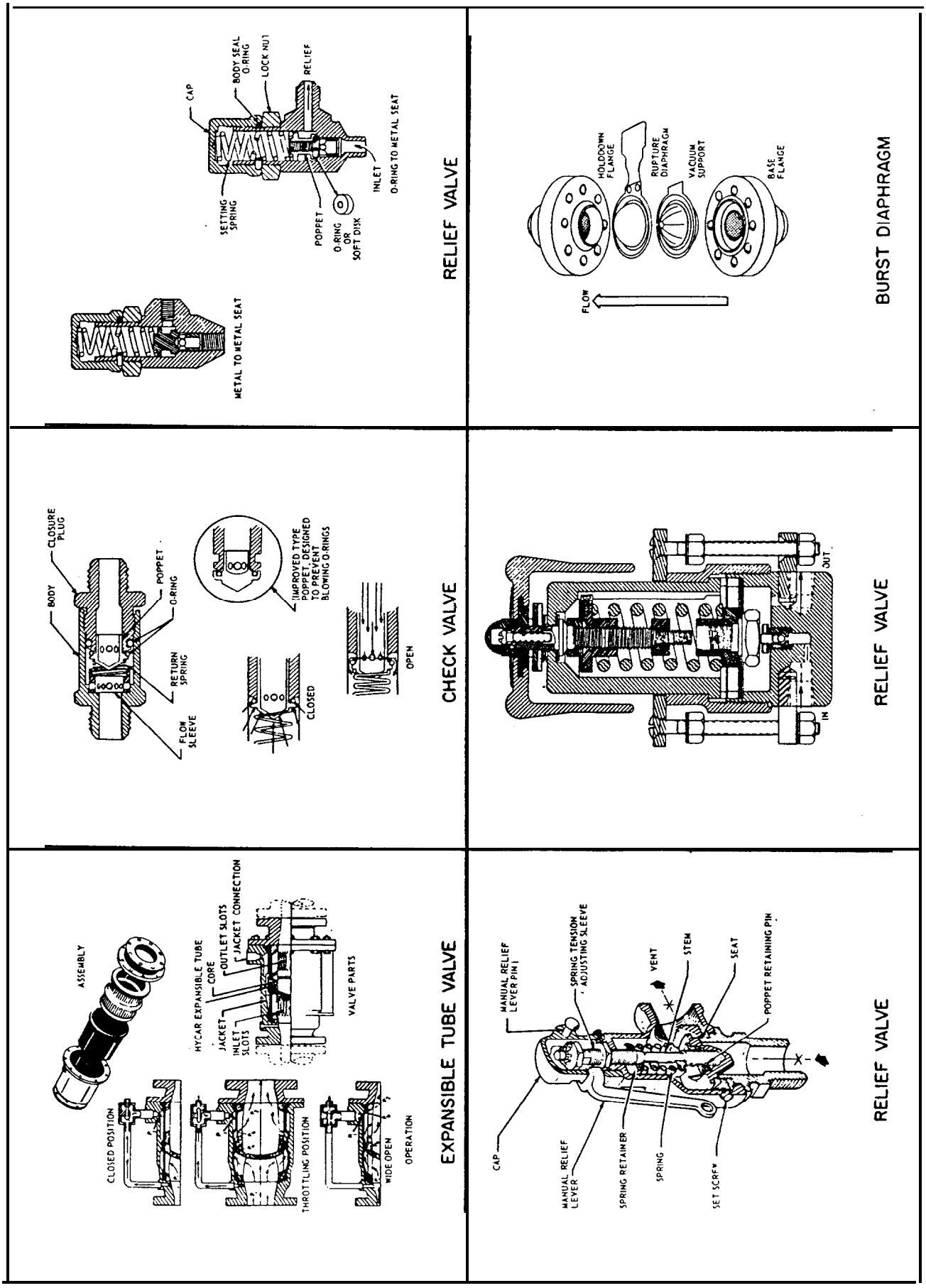

Figure 1-51. Relief, Expansible Tube, and Check Valves

1-292. An orifice will regulate pressure under conditions of dynamic flow, but will not function under static conditions. A constant bleed through a relief valve will regulate pressure but is wasteful. Automatic valving incorporating a diaphragm to regulate pressure under dynamic or static conditions is widely used.

1-293. LARGE VOLUME PRESSURE REGULATOR. The dome-type pressure regulator (figure 1-52) is made in three basic sizes, with additional valve trim variations in each series. The dome, which controls the pressure on the diaphragm and thus regulates the pressure, can be either internally or externally loaded. External loading is usually done with a small volume regulator. This allows easy setting of the downstream regulated pressure. The large volume regulators are normally internal sensing through the large impulse connection, but can be converted to the use of an external sensing line. The dome loading inlets are usually plumbed with 1/8-inch NPT threads, but some are tapped for 3/16-inch tubing fittings with a straight AN thread and O-ring seat.

1-294. INTERMEDIATE FLOW PRESSURE REGULATOR. The dome-type pressure regulator (figure 1-52) is available as a reducing and relief valve in 1/2-, 3/4-, and l-inch end connections. The operation of this regulator is similar to the dome regulator with the addition of a relief port which will vent off downstream pressure in excess of the static loading.

1-295. SMALL VOLUME PRESSURE REGULATOR. The hand loader is a small volume regulator (figure 1-52) commonly used in conjunction with a large volume regulator to set the static dome pressure. This regulator is available in many models with various inlet pressures (1,000 to 6,000 psig) and regulated outlet pressures (1 to 3,100 psig). These values are stamped on the regulator body.

1-296. The sensitivity of the hand loader is a function of the bleed adjustment, which corrects minor deviations beyond the scope of the main diaphragm spring. This bleed is adjustable by the small screw under the acorn nut. The bleed screw should be so adjusted that the bleed sound is just audible at a distance of three feet with the hand loader set at its working pressure. Incorrect adjustment, while not dangerous in itself, causes a loss in sensitivity and a fluctuation in the output of the large volume regulator.

1-297. PRESSURE REGULATION SYSTEM.

1-298. The hand loader (figure 1-52) regulates the static pressure to the dome of the large regulator. The pressure in the dome actuates the regulator valve which maintains a constant pressure downstream of the regulator. Increasing dome pressure opens the regulator valve and increases downstream pressure, but decreasing dome pressure closes the regulator valve and will not decrease the downstream regulated pressure. For decreasing downstream regulated pressure, a manual vent valve must be opened.

1-299. It is important to note that only the downstream pressure gage indicates the regulated pressure. The dome loading pressure gage does not necessarily indicate regulated pressure.

1-300. PUMPS.

1-301. GENERAL.

1-302. The selection of a pump for a particular application is a difficult problem. In the first place, an almost unlimited variety of pump types, styles, and sizes is available for use. Secondly, many factors must be considered regarding the system in which the pump is intended to operate. Consequently, pumps are usually classified in accordance with one of these sets of problems in mind; that is: classification by the pump's operating characteristics, or classification according to the intended use or application.

1-303. STANDARDS.

1-304. Standards relating to pumps and pumping are maintained by the Hydraulics Institute. These standards are issued under the title of "Standards of the Hydraulic Institute," deal exclusively with the subject of pumps, and cover design, application, installation, operation, and maintenance, including general troubleshooting. In addition, these specifications set up standards for nomenclature and design terminology. The Standards of the Hydraulic Institute should be referred to whenever selecting a pump.

1-305. CLASSIFICATION OF PUMPS.

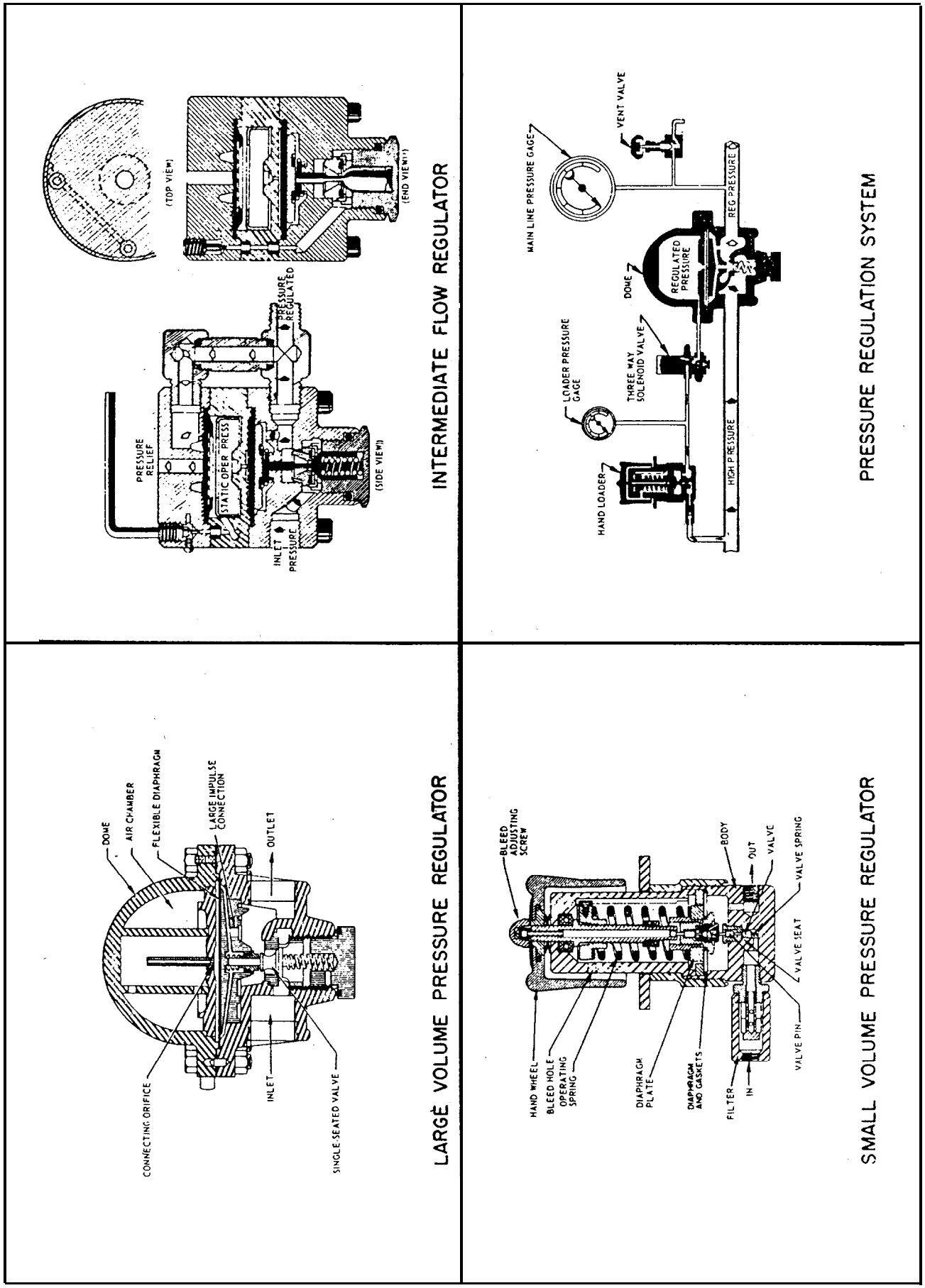

Figure 1-52. Regulators and Regulation System

1-306. CLASSIFICATION ACCORDING TO OPERATING CHARACTERISTICS. Pumps are generally grouped according to whether they are positive or non-positive displacement devices. In addition, pumps may be further classified as to whether they are connected in series or in parallel combinations. Two or more pumps connected in series are usually referred to as multistage units.

1-307. A positive displacement pump is one which delivers a definite quantity of fluid for each cycle of operation. This action is independent of the resistance offered by the system to which the pump discharge is connected. Pumps of the positive displacement type deliver fluids in a series of separate volumes or pulsations. This type of pump is ordinarily self-priming and requires a pressure relieving device or arrangement in the output to protect the pump and the connected discharge system from excessive pressure buildup. Figure 1-53 illustrates in block form the general organization of pumps considered to be positive displacement devices.

1-308. A non-positive displacement pump is one in which the delivery is dependent on the resistance offered by the system to which the pump is discharging. Non-positive displacement pumps usually require some supplementary provision for priming. The output of a non-positive displacement pump is an even, non-pulsating flow of fluid. Figure 1-54 shows the groupings of pumps in the non-positive displacement category.

1-309. CLASSIFICATION ACCORDING TO APPLICATION. Pumps may also be classified according to the application or system in which they are intended for use. Such classifications might include petroleum service, chemical service, fueling service, food handling service, water supply, sewage disposal, control systems etc. Pumps can also be made in a wide range of materials. For example, glass pumps are quite common in certain sanitary applications.

1-310. PUMP SELECTION CONSIDERATIONS.

1-311. The problem of selecting a pump is a difficult one. A great many factors must be taken into consideration. Each application has its own peculiarities, and pumps can be designed for almost any conceivable situation. The Standards of the Hydraulic Institute go into this problem quite thoroughly and should be consulted. Listed below are some of the more important factors which should be considered.

a. Volume and pressure of delivery desired.

b. Type of fluid to be pumped.

c. Compatibility of service fluid and pump materials. Refer to figure 1-4 for a list of compatible materials.

d. Available net positive suction head (NPSH).

e. Head losses to be overcome.

f. Environmental conditions.

g. Space and weight limitations.

h. Power source or driver to be used.

i. Method of lubrication.

j. Allowable pulsations in fluid flow.

1-312. CRYOGENIC COMPONENTS.

1-313. GENERAL.

1-314. The handling of cryogenic fluid utilizes special equipment and procedures not found in other pressure systems. Principally, cryogenic equipment requires a perfection of thermal insulation unapproached in any other field.

1-315. CRYOGENIC INSULATION.

CAUTION

When selecting an insulation material, make certain that it is compatible with the service fluid (paragraph 1-33).

1-316. GENERAL. There are four types of high-quality cryogenic insulations: vacuum alone, vacuum and powder, vacuum and multilayer shielding, and solid foam. Some applications permit continual pumping of the vacuum space, while others require that lines be sealed off and stored for extended periods before use. During

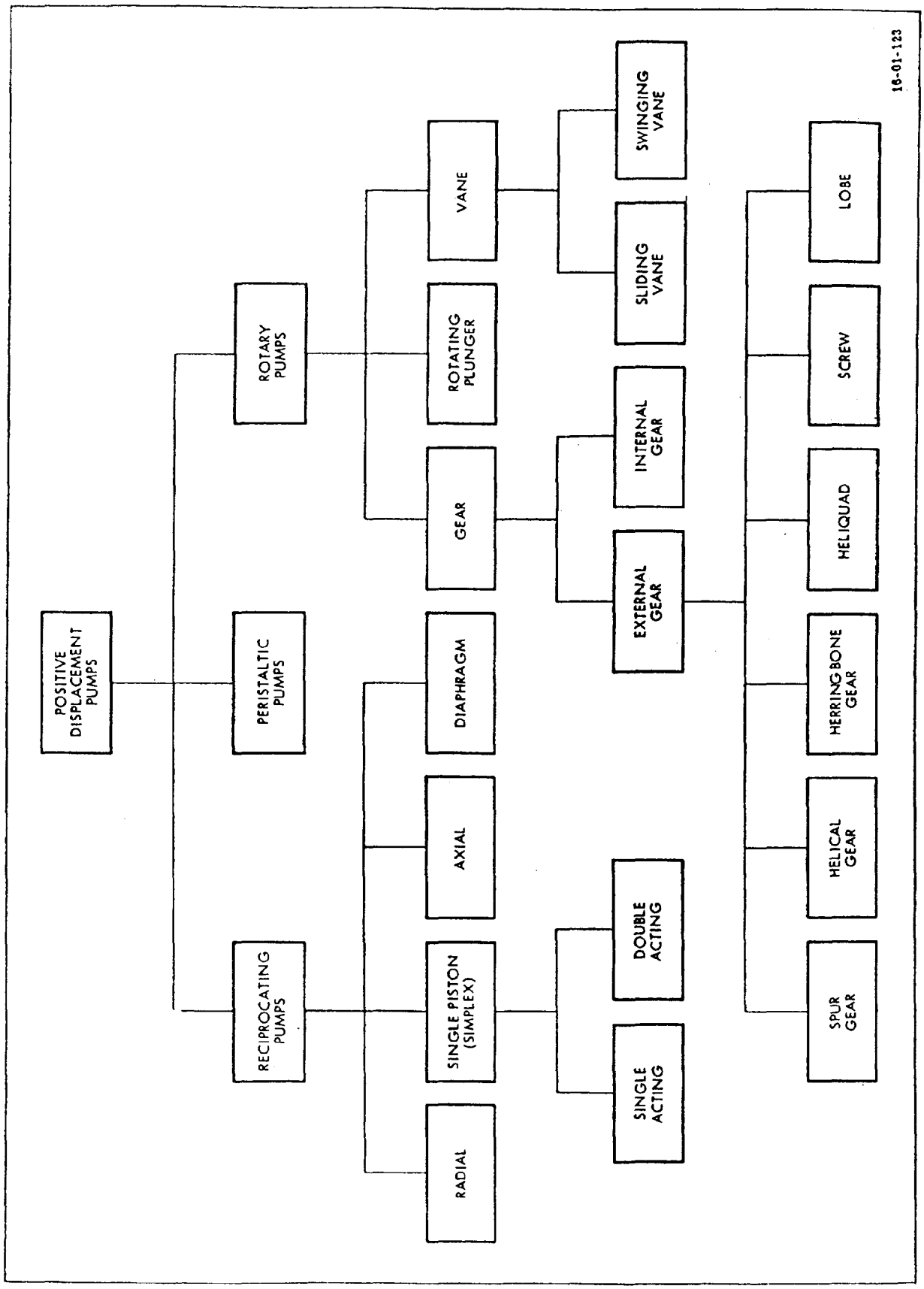

Figure 1-53. Positive Displacement Pumps

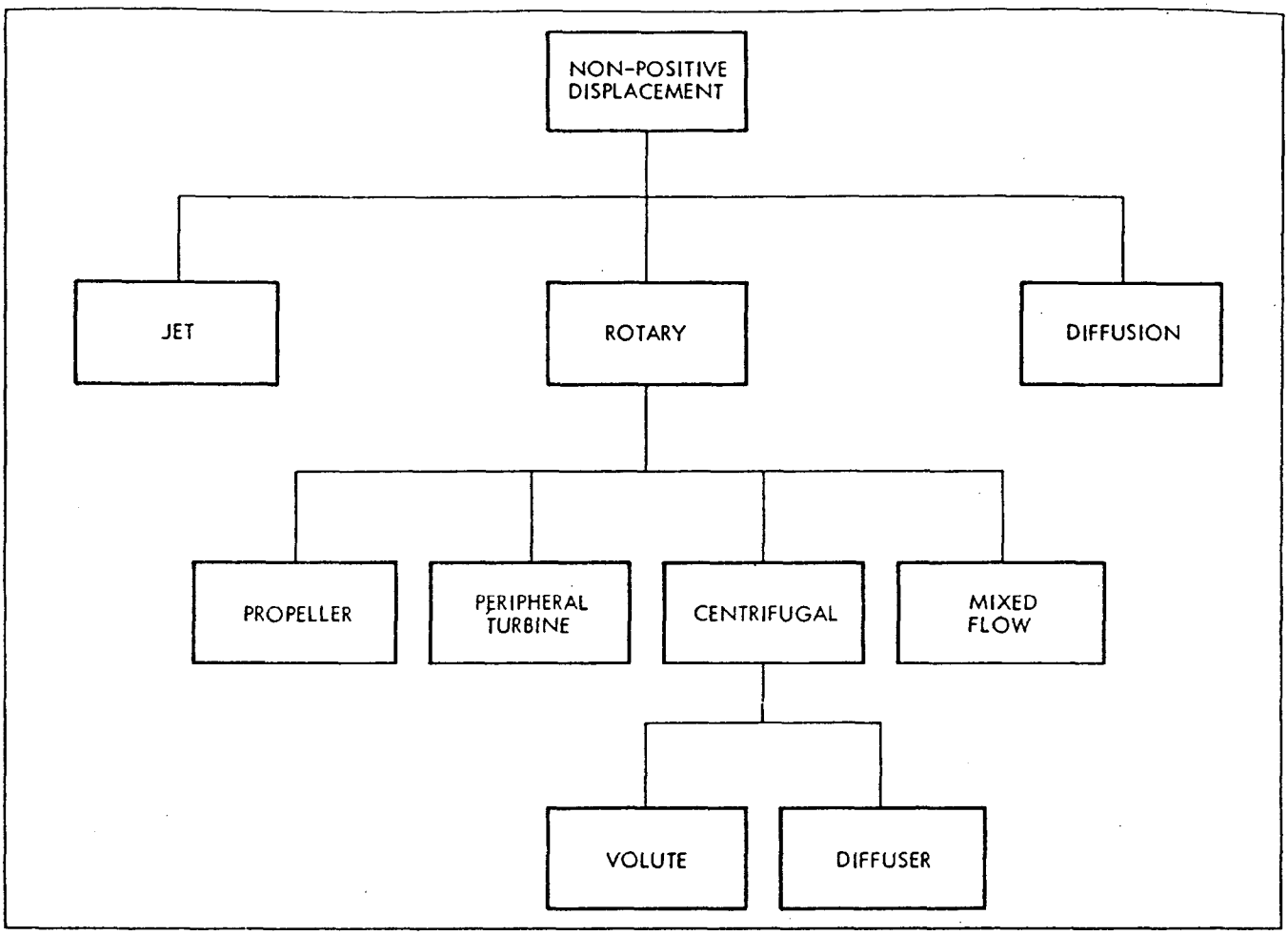

Figure 1-54. Non-Positive Displacement Pumps

extended storage the insulation may fail because of air leakage into the vacuum space. The effect of air leakage can be eliminated by pressurizing the insulation space to approximately seven psig with a pure gas that will condense at a temperature slightly above the temperature of the service fluid. As the temperature decreases in the insulation space, the gas pressure decreases until the gas condenses to a liquid, thus providing the required vacuum in the insulating space during transfer or storage of the service fluid.

1-317. VACUUM INSULATION. Use of high vacuum is the most common insulation technique for cryogenic applications. This type of insulation consists of an evacuated space between two good reflecting surfaces. The heat transfer is predominately by radiation, but there may be a significant contribution due to conduction by residual gas.

1-318. POWDER INSULATION. An evacuated powder insulation consists of a finely divided material packed between the insulated surfaces. Although there is undoubtedly some heat transfer by direct heat transmission through the solid particles, this is usually small compared with the radiant heat transfer between a surface at or near ambient temperature and one at a cryogenic temperature. Since evacuated powder insulation requires a greater thickness for maximum performance than multiple layer type, it is more suitable for use in large equipment than small equipment. The advantages of powder insulation over high-vacuum insulation are: it provides some mechanical support, especially against shock loading; it does not require a very high vacuum for its ultimate effectiveness, and modern mechanical vacuum pumps therefore are sufficient for evacuation; and it is an effective absorbent, so that gases emitted from the walls of the vessel or emanating from a micro-leak are absorbed.

The absorbent effect helps maintain an adequate vacuum for long periods of time without repumping. When a substantial thickness of powder is used, there is no significant advantage in providing low-emissivity boundaries; consequently, construction costs and care can be reduced. The disadvantages of powder insulations are: shaking and settling of the powder often produces voids in the insulating space, evacuation is slow because of the large surface area and absorbent properties, many powders are hygroscopic and require special procedures to remove moisture, and powders include an additional heat capacity and increase the amount of heat that must be removed during cool-down. Because of the slowness of evacuation, large powder-insulated vessels are constructed with multiple pumping taps to decrease the travel distance of the gases through the powder.

1-319. MULTIPLE LAYER INSULATION. Heat transport through multiple layer insulation is much less than through powder insulations. Multiple layer insulation is comprised of three essential elements: highly reflective shields, low conductive fillers to separate the shields, and a vacuum. The reflective shields of thin metal foil are separated by low conductive spacers in the form of thin mats. The shields reduce heat transfer by radiation, and the spacers reduce heat transfer by solid conduction. To be effective, this insulation must be suspended in a vacuum of at least one-tenth of a micron of mercury or less to eliminate the effects of gaseous conduction. The number of layers of shields and spacers vary from 10 to 150 per inch, depending on the requirements of the installation. If the number of reflective shields is increased for the same number of spacers, the spacers will be compacted, becoming more dense, and the result will be a greater heat transfer due to solid conduction. Minimum total thermal conductivity occurs when the two are approximately equal.

1-320. Unbonded fiber glass insulation layers of unbonded fiber glass laid in diagonal pattern stapled to aluminum foil make a good LOX compatible insulation for cryogenic or other service. Protection of the insulation by covering with metal is required. This type insulation does not appear feasible for vacuum jacketing as the jacket must be fabricated after the insulation is installed.

1-321. SOLID FOAM INSULATION. Foam is a material with a cellular structure. It may be made of polystyrene, polyurethane (isocyanate), rubber, glass, silica, or other material. These materials have a relatively high thermal conductivity, but are much less expensive than vacuum insulation, and are rugged, safe, and easy to assemble and maintain.

1-322. SUPPORTS. One path of heat leakage in cryogenic vessels is through support members that confine the liquid carrying vessel to a specific location within the outer protective shell. Heat transfer by this method may account for up to 50 percent of the total heat leak, particularly in containers of small capacity. Heat flow through support members can be reduced by reducing the load that each support is required to resist, by selecting materials that are poor conductors of heat, by reducing cross-sectional area to minimum, and by lengthening heat paths.

1-323. STORAGE VESSELS.

1-324. Cryogenic storage vessels, both stationary and portable, have been developed in various sizes from small portable, containers to tank cars and large storage tanks. Selection of a satisfactory cryogenic tank system includes much more than just the insulation to be used. Unless careful design concepts are incorporated into the overall tank design, including piping supports and any other sources of heat leakage into the vessel contents, and efficient design cannot result.

1-325. TRANSFER LINES.

1-326. The most important consideration when selecting transfer lines is to minimize heat leakage. Vacuum insulation is the chief method used, although in some cases, when transfer times are short, uninsulated lines constructed of material suitable for use with cryogenic fluids is adequate. Coupling design is the main concern with vacuum-insulated transfer lines. Besides having low heat leakage properties, couplings must be capable of being readily assembled, and must be rugged.

1-327. FITTINGS.

1-328. Fittings, such as elbows and tees, present no design problems with uninsulated or wrap-insulated cryogenic piping systems. With vacuum-insulated systems, however, there are design and fabrication problems caused by the requirement

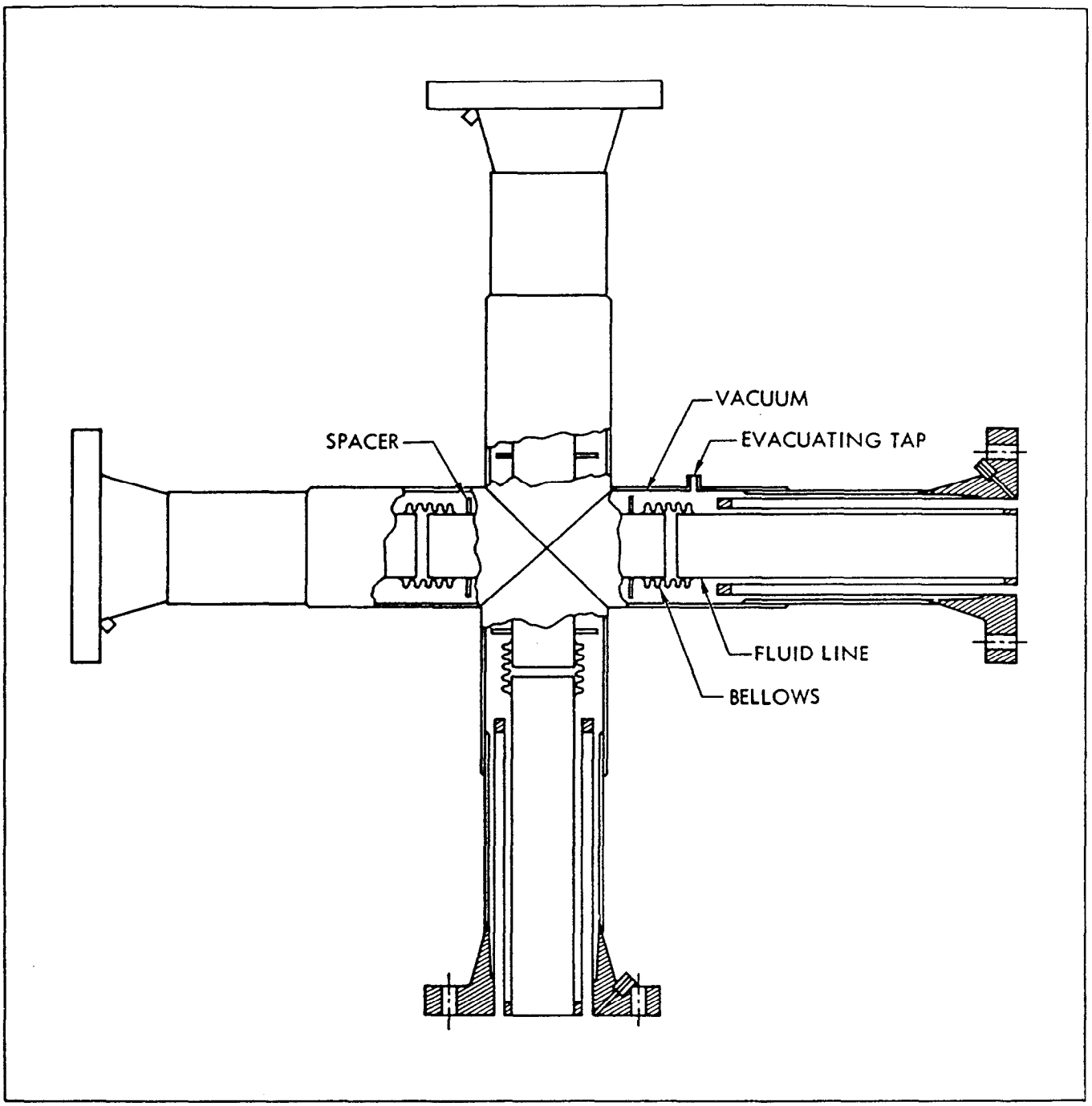

Figure 1-55. Typical Vacuum Insulated Tee

for fittings on both the inside line and the outside line. See figure 1-55 for a typical vacuum insulated tee and figure 1-56 for a typical vacuum insulated elbow.

1-329. VALVES. (Refer to TO 00-25-229.)

1-330. The problems encountered in the selection of valves for cryogenic uses are heat leakage, distortion due to temperature gradients, freezing of the packing, icing together of parts which must have relative motion, and seat tightness. In many applications, it is possible to adapt standard valves for cryogenics by extending the stem and body with stainless steel tubes (to keep the packing at essentially ambient temperatures), and, when necessary, by changing the seat materials. Besides the simplicity associated with the use of

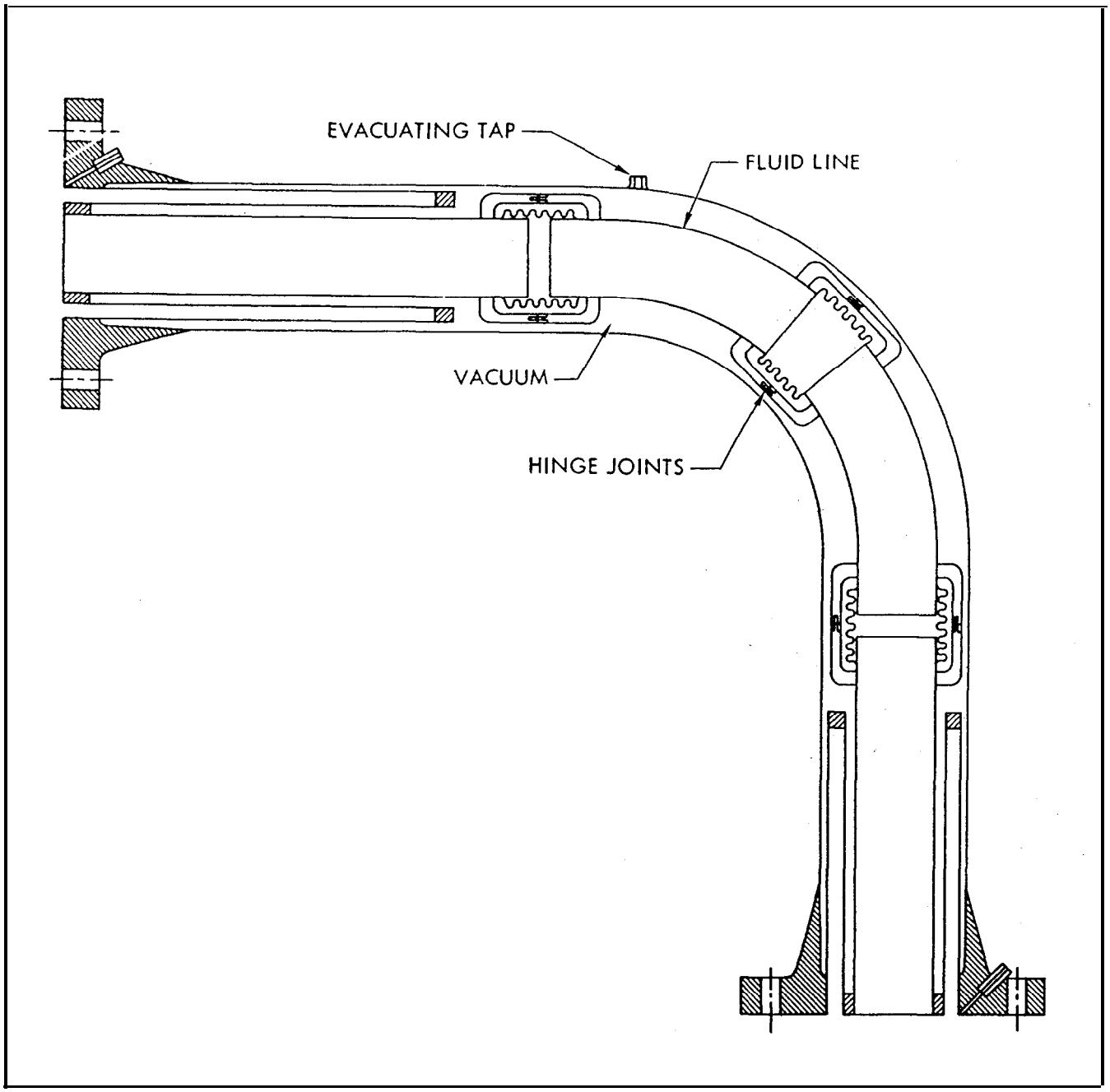

Figure 1-56. Typical Vacuum Insulated Elbow

extended-stem valves, another advantage is that ordinary actuators can be used, since they are at ambient temperatures. Since the stem packing in these valves directly contacts the cryogenic fluid, the extension should be constructed and the valve should be installed so that liquid will not drip into the extension region, causing a large heat leak, freezing of the packing, and icing of the moving parts. Figure 1-57 shows a standard valve modified for cryogenic service. An example of a vacuum insulated cryogenic valve is shown in figure 1-58.

1-331. There are many types of cryogenic valves available. The globe valve and the gate valve are the most commonly used types. The globe valve is adaptable to either straight-through, angle, or venturi configuration. Where flow control is desired, the globe valve lends itself to throttling better than any other type and the plug may be

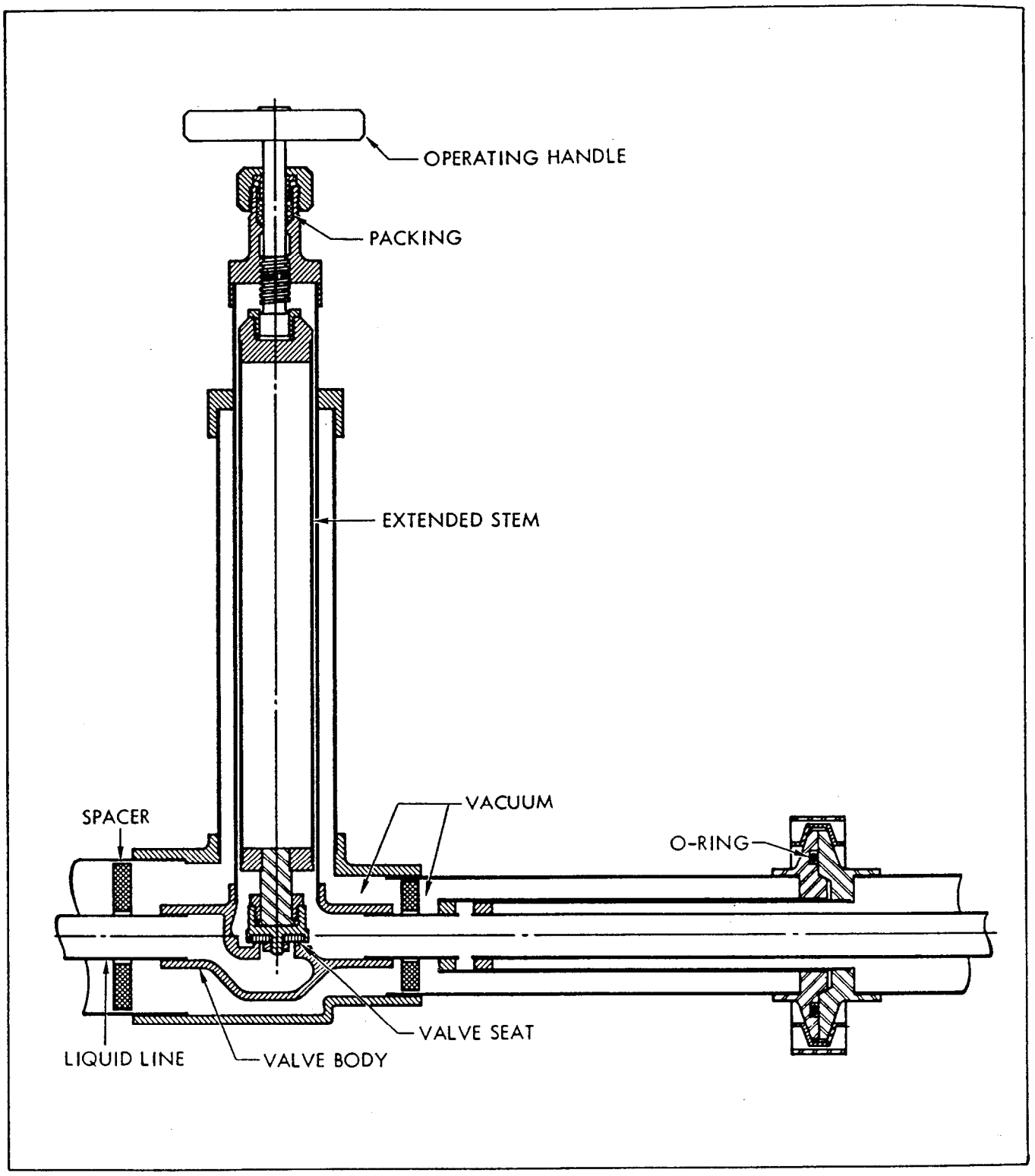

Figure 1-57. Standard Valve Modified for Cryogenic Service

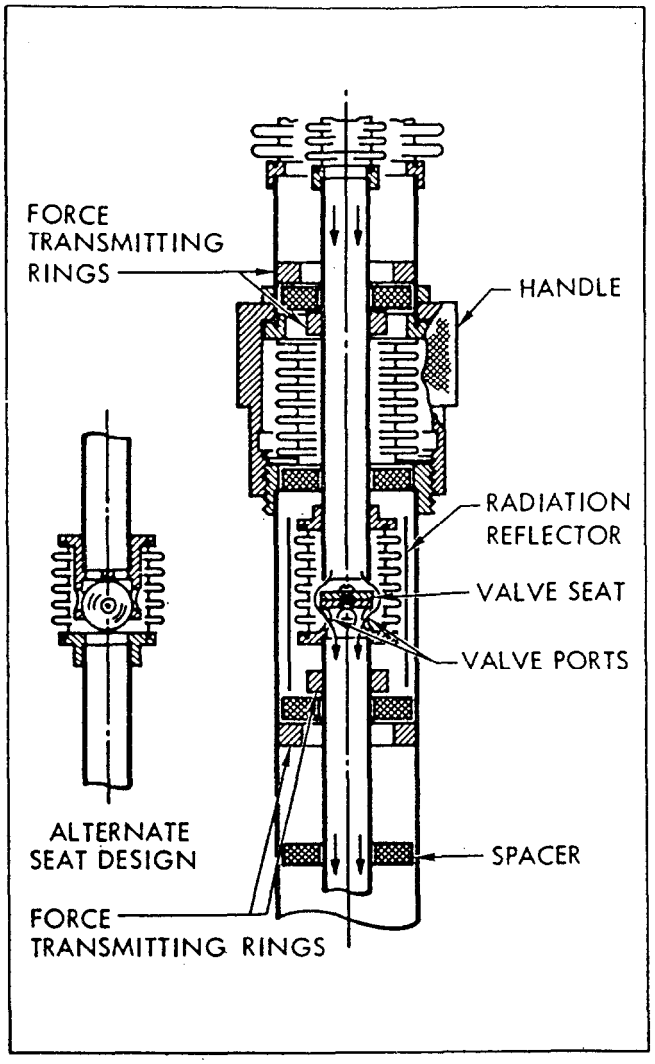

Figure 1-58. Vacuum Insulated Cryogenic Valve

shaped to give numerous flow characteristics. However, the globe valve has a high resistance to flow, with a resultant high-pressure drop. In large size flow-to-close type globe valves, water hammer can be a problem. Gate valves, on the other hand, have good pressure-drop characteristics, fast closing times, and are fairly simple in design. The flow of the transfer fluid has little effect on the closing operation, and this type of valve is less subject to water hammer since it is dependent principally upon operator-controlled closing characteristics. Disadvantages are that gate valves sometimes freeze up, and seat galling may result if the basic material used in the valve seat and plug is stainless steel.

1-332. LIQUID LEVEL INDICATORS.

1-333. There are several types of liquid level indicators that can be used to measure the level of liquefied gases. The most widely used are buoyancy devices, hydrostatic pressure gages, and electrical capacitance gages.

1-334. Buoyancy devices determine the level of the liquid by the position of a float on the surface of the liquid. This information is telemetered to the outside of the storage vessel by mechanical means, which results in a physical connector between the cryogenic temperature inside the vessel and the ambient temperature outside the vessel. This type of indicator is difficult to apply to low density liquids such as hydrogen or helium.

1-335. Hydrostatic pressure gages use a differential pressure gage with one side connected to the bottom of the vessel and the other connected to the vapor space above the liquid. The line connecting the gage to the liquid has a long horizontal section, and the small heat leak will cause boiling in the horizontal part somewhere between the inner and outer walls of the vessel. The pressure difference indicated by the gage corresponds to the hydrostatic head of liquid. One disadvantage of this type of indicator is at tendency for the occurrence of pressure oscillations. They occur in the liquid-vapor interface along the line connecting the gage to the liquid, resulting in the erratic and inaccurate readings. Pulsation dampers have been developed that effectively isolate the pressure gage from the oscillations while still preserving its response to the average pressure.

1-336. The capacitance type of gage is designed to measure and indicate the level of liquified gases inside a closed vessel. Recording and control devices may be incorporated into this type. It operates on an electrical capacitance principle, and makes use of the difference in dielectric constants of the liquid and vapor. The sensing element is a cylindrical capacitor whose capacitance is determined by the height of the liquid column. The sensing capacitor is one element of an automatically balanced bridge that indicates and records the level of the liquid; sensitivity is adequate for use where the difference in dielectric constants of the liquid and vapor is 0.05 or greater. This instrument may also incorporate a control function that supplies

a controlled air pressure to a pneumatically operated valve for maintaining the level at a predetermined point. The capacitance type of indicator has no moving parts, and mechanical failures are therefore infrequent. The chief disadvantage of this type lies in the need for electronic circuitry of fairly high sensitivity. The advantage is that the same instrument can be used on liquids of different dielectric constants by merely adjusting the sensitivity of the measuring circuit.

1-337. PUMPS.

1-338. Various types of pumps can be used to transfer cryogenic fluids. Centrifugal pumps are the most widely used, followed by turbine and variable displacement pumps. Immersion pumps are used for charging gas cylinders with cryogenic fluids. The principal problem encountered when using pumps for cryogenics is compatibility of pump materials with the service fluid. Refer to figure 1-4 for suitable materials.

1-339. Cryogenic fluid transfer can also be performed by pressurizing the storage vessel with an inert gas that provides the force to transfer the fluid.

CHAPTER 1

SECTION IV

FABRICATION OF COMPONENTS

1-340. PIPE COMPONENTS.

1-341. WELDED PIPE.

1-342. All welding of piping systems shall be performed by welders qualified in accordance with TO 00-25-224.

1-343. Sections of piping, where practicable, shall be fabricated with breakable joints every 20 to 40 feet to allow for reasonable handling and hydrostatic test prior to installation. Sections should also be fabricated to allow for inspection and cleaning after usage.

1-344. BUTT WELD FITTINGS.

1-345. END PREPARATION. The 37-1/2-degree bevel is recommended for piping when the wall thickness is 3/4-inch or less. The combination 37-1/2-degree and lo-degree bevel (J bevel) is recommended where the wall thickness is greater than 3/4-inch. Machining and/or grinding end preparation is preferred; however, flame cutting is acceptable, provided the cut is reasonably smooth and all heavy oxide is removed from the cut surfaces.

1-346. CLEANING. All foreign matter, especially arbonaceous matter, shall be removed from the weld area to prevent contamination of the weld.

1-347. ALIGNMENT. The ends of the parts to be welded shall be aligned as accurately as possible within the tolerances of standard pipe.

1-348. THREADED PIPE.

WARNING

Do not adjust fittings under pressure.

1-349. Clean-cut and uniform threads are required for strong, tight, durable joints. Threads shall be cut with the correct taper, lead, thread angle, and diameter within reasonable manufacturing tolerances. The diameters should allow for hand-engagement yet allow sufficient threads for wrench makeup. They should also be long enough to compensate for pipe strains experienced in service.

1-350. PIPE THREAD STANDARDS.

1-351. Tapered pipe threads shall conform to the NBS Handbook H-28.

1-352. When any tapered threads except dryseal pipe threads are mated, a sealer or a thread compound must be used. The thread compound must be compatible with the fluid in the line.

1-353. It is important that the threads of both parts of screwed pipe joints be thoroughly cleaned before they are joined. Any threads which may have become burred or bent should be straightened or removed, and an approved lubricant or sealant applied. The lubricant reduces friction, allowing the two parts to be pulled up further, resulting in a more effective pipe joint. Pipe joints should not be screwed together so rapidly that the temperature rise of the two parts causes a defective joint.

1-354. Leaky joints can usually be traced either to faulty threading or an improper lubricant and/or sealant. Frequently, the trouble is that the thread on the pipe may have been cut with dull or improperly adjusted threading tools, resulting in wavy, shaved, rough, or chewed threads.

1-355. Wavy threads are noticeable both to the eye and touch, due to the circumferential waves or longitudinal flats of slightly helical form, rather than the desired true circular form. Shaved threads appear to have been threaded with two dies; one not matching the other, giving a double-thread appearance at the start of the thread. Rough or chewed threads are noticeably irregular or jagged. Leaky joints can result from any of these faults.

1-356. In order to obtain the thread engagements listed in figure 1-14, it is necessary to vary the

torque or power applied according to the size, metal, and weight of material used. For example, it requires considerably less power to make up a screwed joint between brass fittings than for the same size steel fittings. Proper thread lubrication and/or sealant is also important.

1-357. TUBING COMPONENTS.

1-358. STANDARD TUBING.

1-359. Standard tubing components shall be fabricated in accordance with the requirements listed in TO 1-1A-8, or industrial standards where applicable.

1-360. TUBING SIZES AND LENGTHS. In replacing a damaged tube, select a tube of the same size and material, if possible. If the size tubing with the required wall thickness is not available, competent engineering authority shall be consulted.

1-361. For selection of new tubing, it is necessary to know the maximum allowable working pressure of the system. By consulting figures 1-18 through 1-22, the required tube outside diameter (OD) and wall thickness can be determined.

1-362. Cut the piece of tubing approximately 1/4-inch longer than the required length for straight length tubing. For tubing having bends, cut the piece of tubing approximately 10 percent longer than the actual required length. After the required bends have been made, the new tube may be 1/2 to 2 inches longer than required, allowances should be made for flaring operation before cutting off the excess length.

1-363. TUBING TEMPLATE. If the defective tube is intact and the bends have not been changed, use it as a template or pattern from which to bend a new tube. If rerouting is required, a new tube section is to be installed, or a template must be made, select a soft iron wire and proceed as follows:

a. Place material selected for use as a template into one of the fittings where tube is to be connected. Form necessary bends in order to place opposite end of template into other connections. When template is satisfactorily formed to span area between fittings, remove and use pattern to bend new tube.

b. Select a path with least total degrees of bend, since this reduces pressure drop and simplifies bending.

c. Use a path, if possible, with all bends in same plane.

1-364. Never select a path that does not require bends. A tube cannot be cut or flared accurately enough to be installed without bends and still avoid initial mechanical strain of the tube. Therefore, direct, straight-line connections should never be made between two solid fixed attachment points, since bends are necessary to allow the tubes to expand and contract under temperature differences and to absorb vibration. In all cases, the new tube assembly should be so formed prior to installing that it is not necessary to PULL the assembly into alignment by means of the coupling nuts.

1-365. TUBE CUTTING. To ensure a good flared connection, the tube must be cut off squarely and the end must be squared and burred before it is flared. Cut tubing as follows:

a. Clamp standard tube cutter over tube.

b. Rotate cutter towards its open side, gradually feeding cutting wheel downward by turning adjustable screw. Do not feed wheel too rapidly. The cutting wheel should be fed only while the cutter is being rotated, as dents will be caused in tubing when the wheel is fed while the cutter is not moving. Moderate or light tension on the adjustable screw will maintain an even tension on the cutting wheel. This prevents bending and avoids excessive burrs on soft tubing.

c. If cutter is not available, use hacksaw with blade of 32 or more teeth per inch.

1-366. PREPARING TUBE FOR FLARING. Tubing is prepared for flaring in accordance with TO 1-1A-8 or as follows:

a. After tube has been cut off, file and square with any fine-tooth flat file. If hacksaw has been used, file end of tube until all saw marks have been removed.

b. Remove burrs from both inside and outside of tube by means of a burring tool. If a burring tool is not available, remove inside burrs with a knife or scraper and outside burrs with a flat file. Do not round edges too much. Leakage will result if tube is not properly burred.

c. Remove all filings, chips, burrs, and grit from inside of tube in order to void peck marks or scratches on inner surface of flare.

d. Clean tube thoroughly by blowing it out with either oil-free compressed air or dry nitrogen.

e. Inspect tube end to be sure it is round, square, clean, free of draw marks, mill scales and scratches. Scratches and draw marks are likely to spread and split the tube when it is flared.

f. Ballistic flare tool (Parker-Hannefin Corporation, Model B820A and 82032) should be used on corrosion-resistant tubing.

1-367. BEND RADII. Tubing installations requiring bends must be accomplished with minimum distortion and constriction of the tubing. A satisfactory bend is one which decreases tubing OD less than six percent. Bending tubing in accordance with figure 1-59 will yield satisfactory bends when accomplished with the proper tools and methods. Attempts at tube bending with improper tools or by incorrect methods will result in constricted sections of bend with a reduction of fluid flow.

1-368. PREPARING BENDS. Bend tubing as required to align with center line of fittings, without distortion or tension.

NOTE

To avoid difficulty in assembling and disconnecting, a sufficient straight length of tube must be allowed from the end of the tube to the start of the bend. Allow twice the length of the nut as a minimum.

1-369. When correct equipment and methods are used, bends with little or no flattening are produced. Common defects in bending are flattening, kinking, or wrinkling.

1-370. Flattened bends result from not having the mandrel far enough forward in the tube, by bending thin-walled tubes without a mandrel, or when too short a radius is attempted.

1-371. A kinked and flattened bend is caused by slipping of the tube in the bender. Tubes must be firmly clamped by the clamp block to prevent slippage during the bending process.

1-372. Wrinkled bends result when thin-walled tube is bent without a supporting mandrel.

1-373. When hard tubing is bent, breakage will sometimes occur when the mandrel is too far forward in the tube or when too short a radius is attempted.

1-374. PREPARING FLARES. All flared tubing shall be manufactured and maintained in accordance with the practices established in TO 1-1A-8. This technical order is available and all technicians should become familiar with its contents.

1-375. Rigid aluminum alloy tubing assemblies of 1/4-, 5/16-, and 3/8-inch nominal OD used for flared AN or MS fittings shall be double flared in accordance with MS33583 drawing requirements (figure 1-60).

1-376. Corrosion-resistant tubing assemblies and those aluminum alloy tubing assemblies not covered above shall be single flared in accordance with MS33584 drawing requirements (figure 1-61).

1-377. Flares on stainless steel tubing will be concentric with no cracks. Eccentric or cracked flares shall not be used. Slight obliqueness at the root of the inner diameter is not objectionable. The flare surface shall be smooth. Pol-

NOMINAL TUBE OD(1)	MINIMUM BEND RADII(2)		STEEL TUBING	
	2S-1/2 H 5052	CORROSION-RESISTANT(3)	DESIRABLE RADIUS	MINIMUM RADIUS(4)
1/8	3/8	- - -	- - -	- - -
3/16	7/16	21/32	3/4	3/8
1/4	9/16	7/8	1	3/8
5/16	- - -	- - -	1 1/4	3/8
3/8	15/16	1 5/16	1 1/2	3/8
1/2	1 1/4	1 3/4	2	1/2
5/8	1 1/2	2 3/16	2 1/2	5/8
3/4	1 3/4	2 5/8	3	3/4
7/8	- - -	- - -	- - -	- - -
1	3	3 1/2	4	1
1 1/8	- - -	- - -	4 1/2	1 1/4
1 1/4	3 3/4	4 3/8	5	1 1/2
1 3/8	- - -	- - -	5 1/2	1 3/4
1 1/2	5	5 1/4	6	2 1/8
1 5/8	- - -	- - -	6 1/2	2 1/2
1 3/4	7	6 1/8	7	2 7/8
1 7/8	- - -	- - -	7 1/2	3 1/4
2	8	7	8	3 5/8

(1) Dimensions in inches. Bend radii measured to inside of bend.

(2) Increase bend radii when wall thickness is below standard.

(3) Equal to 3-1/2 times tube diameter.

(4) The minimum radius will be used only when the desirable radius cannot be used.

Figure 1-59. Bend Radii for Conduit and Fluid Lines

ishing or burnishing may be used to better effect a seal. The diameter of the flare will be gaged by the use of go-not-go gages, such as shown in figure 1-62. Very heavy-walled tubing as listed in figure 1-63 is exempt from gaging. These flares will be judged on a noninterference fit basis between the flare and the B-nut. Sufficient flare will be provided to prevent the flare from pulling through the sleeve, and adequate surface provided on the inner face of the flare to effect a seal.

1-378. Reference must be made to the pressure-rating charts in order to select the proper wall thickness. (See figures 1-18 through 1-22.)

1-379. STANDARD AIR FORCE FLARING TOOL (LEONARD 3CP). The flared-type grip die consists of two steel blocks placed side by side and held in alignment by steel pilot pins pressed into one block and extending into correspond-

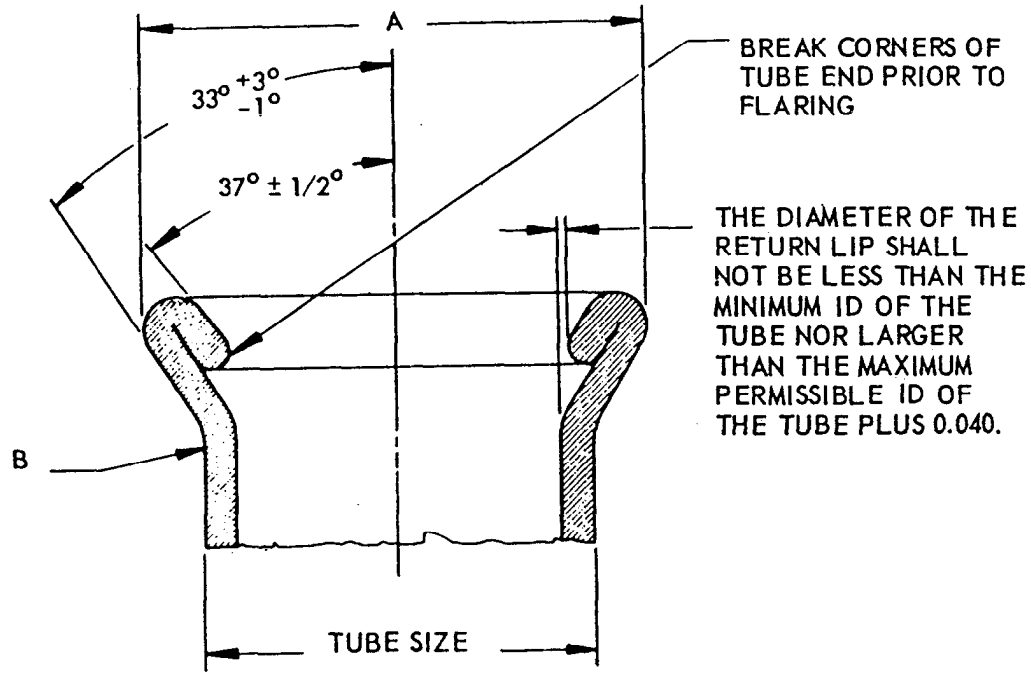

TUBE SIZE NOMINAL OD	A +0.000 -0.010 DIAMETER	B ±0.010 RADIUS	WALL THICKNESS	MINIMUM INSIDE DIAMETER
1/4	0.359	0.032	0.028 0.035	0.178 0.159
5/16	0.421	0.032	0.035 0.049	0.224 0.198
3/8	0.484	0.046	0.028 0.035 0.049	0.310 0.288 0.261

FLARE SHALL BE SQUARE WITH CENTERLINE OF TUBE WITHIN 1/2 DEGREE.
FLARE SHALL BE CONCENTRIC WITH OD OF TUBE WITHIN 0.005 TIR.
FLARE SHALL BE FREE OF CRACKS AND PIT MARKS.
FOR USE WITH STANDARD FLARED TUBE FITTINGS.
DIMENSIONS IN INCHES.

Figure 1-60. Standard Dimensions for Double Flare Tubing End

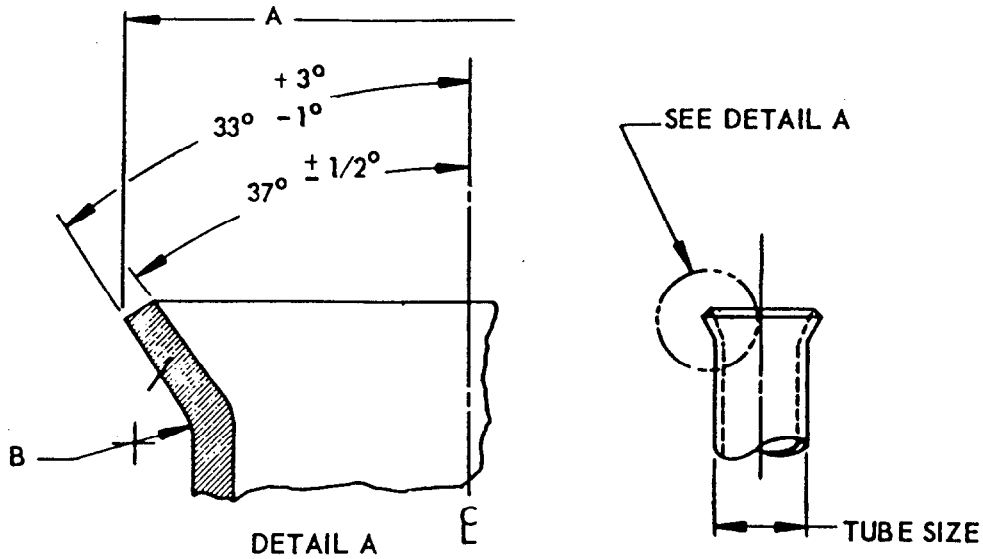

TUBE SIZE NOMINAL OD	A DIAMETER				B ±.010 RADIUS
	AL ALLOY TUBING		STEEL TUBING		
1/8	0.200	+ 0.000 - 0.010	0.200	+ 0.000 - 0.010	0.032
3/16	0.302		0.302		
1/4	0.359		0.359		
5/16	0.421		0.421		
3/8	0.484		0.484		0.046
1/2	0.656		0.656		0.062
5/8	0.781		0.781		
3/4	0.937		0.937		0.078
1	1.187	+ 0.000 - 0.015	1.187	+ 0.000 - 0.015	0.093
1-1/4	1.500		1.500		
1-1/2	1.721		1.721		0.109
1-3/4	2.106		2.106		
2	2.356		2.356		
2-1/2	2.856		2.856		
3	3.356		3.356		

FLARE SHALL BE SQUARE WITH CENTERLINE OF TUBE WITHIN 1/2 DEGREE.
FLARE SHALL BE CONCENTRIC WITH OD OF TUBE WITHIN .005 TIR.
FLARE SHALL BE FREE OF CRACKS AND PIT MARKS.
FOR USE WITH STANDARD FLARED TUBE FITTINGS.
DIMENSIONS IN INCHES.

Figure 1-61. Standard Dimensions for Single Flare Tubing End

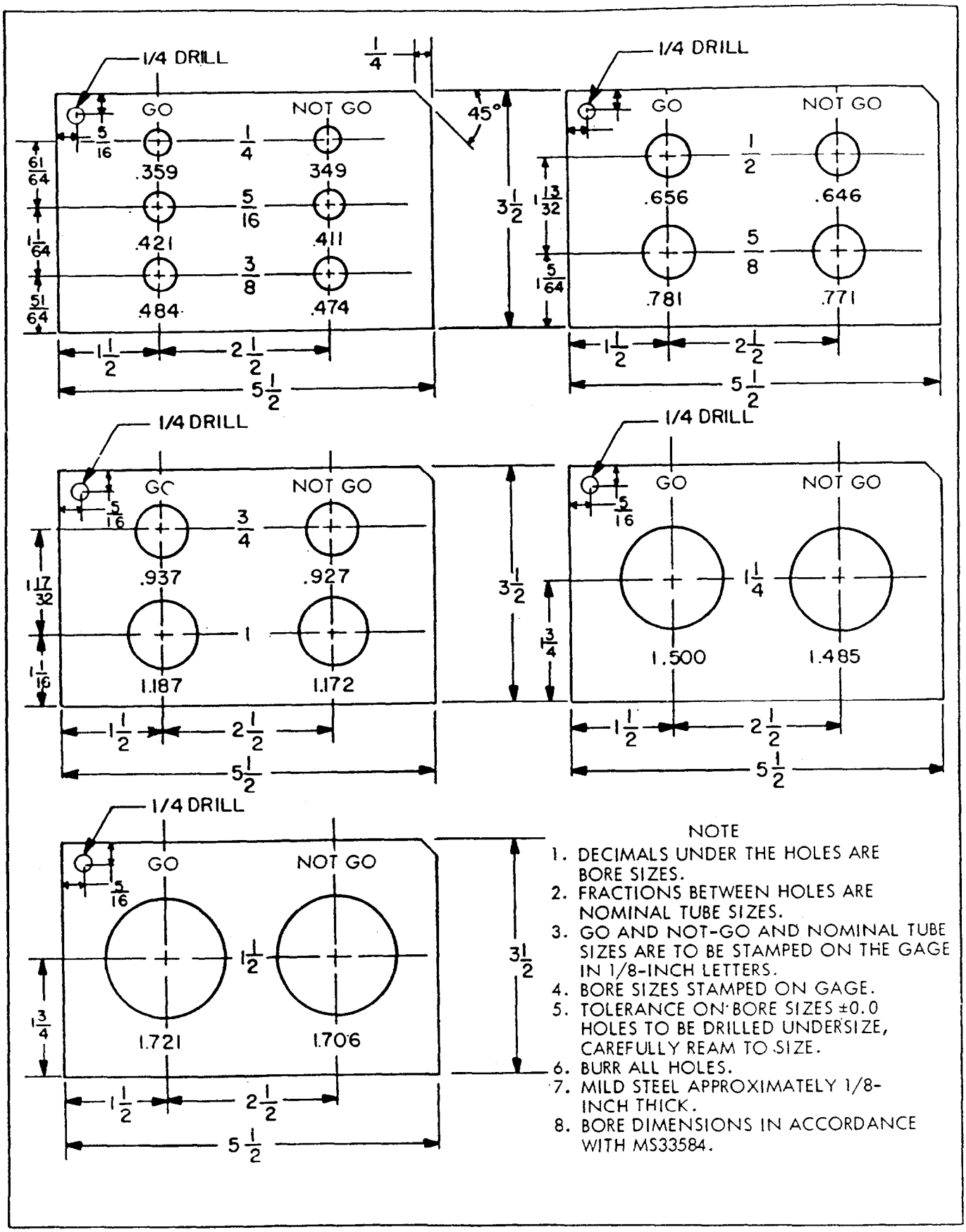

Figure 1-62. Go-Not-Go Gages

OD OF TUBING	WALL THICKNESS
1/4-in.	0.049-in. and above
3/8-in.	0.049-in. and above
1/2-in.	0.058-in. and above
5/8-in.	0.058-in. and above
3/4-in. and above	0.065-in. and above
NOTE: Ballistic flaring tool shall be used on heavy-walled steel tubing.	

Figure 1-63. Very Heavy-Walled Tubing

ing holes in the other block. A number of countersunk holes are drilled along the grip die section of the tool, the holes varying in size to correspond with the tubing size. The grip die is designed to grip the tubes tightly without damaging them. The flaring tool for this die consists of a cylindrical bar tapered at one end to correspond with the angles of countersunk holes.

1-380. Procedures for flaring tubing are as follows:

a. Insert tube into correct diameter hole of flaring tool die and clamp block dies tightly together. Allow tubing to extend upward through die approximately one-half outside diameter of tube, secure assembly, place tapered end of flaring tool into centerline of tubing, and tap lightly with hammer until walls of tube are forced to assume shape of countersunk hole in die. Avoid cracking tube ends.

b. Check flare by placing an AN819 sleeve over tube. The outside diameter of the flare should extend approximately 1/16-inch beyond the end of the sleeve but should not be longer than the largest outside diameter of the sleeve.

1-381. STANDARD FLARING MACHINE (LEONARD TUBE MASTER 3CP-VD). The flaring machine is designed for efficient production flaring of pressure tubing. It consists of an electric driven motor which drives a spindle inserted with a 37-degree flaring center tool or squaring and burring tool; the rpm of this spindle is regulated by the variable speed control rotor handle, and the horizontal movement of the spindle is manually operated by a hand lever. The moving jaws which contain the flaring dies will clamp and secure the tubing. The jaws are operated by a compressed air actuator and controlled by a foot pedal air valve. It is necessary to depress the foot pedal air valve and move the operating lever to the right (approximately one inch) in order to close the movable jaws.

1-382. Procedures for flaring tubing are as follows:

a. Install 37-degree flaring center into small tool adapter spindle.

b. Adjust calibrated ring on spindle for number which is tube OD, to align with marked groove, by use of an Allen-type screwdriver.

c. The die adapter is installed in the movable jaws and the matched flaring dies of the correct tube OD size are placed in these adapters. All foreign matter in the grooves of the jaws, adapter, and dies will be removed prior to assembly of these parts.

d. The tube stop finger on the fixed jaw should be allowed to drop to dead center of the flaring die by means of the two-stage stops. The finger adjusting screw should be turned to adjust the amount of tube length which sticks through the die to determine the correct flare diameter.

e. Slowly operate hand lever of horizontal spindle toward flaring die; then

adjust and lock positive spindle stopscrew, located on top of machine casting, to keep flaring center from coining tube and yet bringing tube flaring to correct diameter.

f. Start electric motor by pushing switch to ON.

g. Position tube into rear flare die and against finger stop.

h. Depress and hold foot pedal air valve and move operating lever slowly until movable jaws close and clamp tube.

i. Continue to use manual operating lever to flare tube until completed; release it and remove flared tube.

j. Check flared tube diameter with go-not-go gage. (See figure 1-62.)

k. The diameter of the flared tube of wall thickness, 0.035 to 0.049 inches, should pass snugly through the gage hole marked GO. Failure to pass through the GO hole indicates that the flared tube diameter may be too large and, therefore, should be checked by inserting the sleeve fitting into the flare. An overlap of the flared edge should normally extend 1/16-inch past the beveled edge of the sleeve fitting; if the overlap is more than 1/16-inch, the tube should be rejected. If the diameter is too small, it will pass through the NOT-GO gage hole and the tube will be rejected.

I. The rpm of the horizontal spindle center should be adjusted for slow rpm when used for flaring aluminum alloy tubing and adjusted for high rpm for flaring steel tubing.

1-383. BALLISTIC FLARE TOOL (PARKER-HANNEFIN CORPORATION, Model B820A and B2032). This tool is recommended to be used on all flared tubing for pressures above 3,000 psi, and shall be used on heavy-wall stainless steel tubing in the larger sizes. Manufacturer's operating instructions shall be followed and explosive cartridges as specified by the manufacturer for each wall thickness and size shall be used.

1-384. PREPARING TUBING FOR FLARELESS FITTINGS. MS flareless tube fitting assemblies shall be fabricated in accordance with practices established in applicable TO's. General details of the procedure are as follows:

NOTE

MS flareless fittings shall not be used in pressure applications above 3,000 psig.

a. Ends of tubes to be assembled with flareless fittings shall be reasonably square and have no external scratches or dents. External distortion near the end of the tube may result in leakage past the sleeve when assembled. All burrs and sharp edges should be removed from the inside and outside of the tube end; however, eight edge shall not be appreciably chamfered.

b. To install fittings on tubing, first the nut and then the sleeve should be put on the tube end. The sleeve is installed with the cutting edge towards the end of the tube. The use of flareless fittings requires presetting of the tubing end. This should be done with a special presetting machine by personnel trained in its use. In emergency, tubing may by hand preset for temporary use by the procedures in the following paragraphs.

c. The proper presetting tool shall be selected. If a presetting tool is not available, a steel fitting may be used for the presetting operation. In an emergency, an aluminum fitting may be used for the presetting operation. Do not reuse aluminum fitting.

d. The threads of the tool and nut, the pilot of the sleeve, and the seat of the tool shall be lubricated with a compatible lubricant. (See figure 1-4.)

e. To perform hand-presetting, hold the tube end firmly against the seat of the tool and, while holding the tool to prevent turning, slowly screw the nut on the tool until the cutting edge of the sleeve grips the tube sufficiently to prevent rotating the tube by the fingers. When a sleeve is preset in an installation, the presetting tool may be rotated by hand, instead of the tube, to check for grip of the sleeve. When the tube cannot be rotated, the starting position has been reached. From this point the nut shall be tightened an additional 1-1/6 turn for all sizes regardless of tubing material used. This tightening will seat the sleeve cutting edge in the outer surface of the tube.

f. The assembly shall be removed from the presetting tool and a visual examination made for proper preset.

g. The pilot of the sleeve should contact or be within 0.010-inch of the tube OD. If the distance is greater than 0.010-inch, the sleeve is incorrectly preset. If the pilot of the sleeve is deformed, the fitting has been overtightened.

h. There may be a maximum of 1/64-inch longitudinal movement of the sleeve.

i. The sealing surface of the sleeve shall be smooth, free from scores, and show no cracks.

j. The sleeve should be bowed slightly, and may rotate on the tube after assembly.

1-385. SUPERPRESSURE TUBING.

1-386. When high-pressure tubing systems are designed, the comparative inflexibility of the heavy-walled alloy steel tubing must be taken into consideration.

1-387. BEND RADII. The 1/4-inch OD superpressure tubing can be bent cold by clamping it in a smooth-jaw machinist's vise with soft material or wood over jaws, and then bending to the required angle. After a bend is made, the tube shall be inspected for any scratches that might cause the tube to fail in vibration service. In some instances, a loop similar to an expansion bend in a pipe is formed in the tubing to allow flexibility in assembly and dismantling. A 1/4-inch OD tubing can be bent around a circle having a 1-1/2-inch radius without flattening the cross section. Where 1/4-inch OD tubing is used in temporary installations with the expectation of subsequent rebending to other dimensions, the radius of bend should be at least six times the OD of the tube. Special care should be exercised when bends are formed in the heavy-walled superpressure tubing. Double twists in any one radius bend will not be allowed since extreme stresses would be set up within the tubing. Bends of very small radius would cause the thinning or flattening of the tubing wall, lowering the pressure rating or flow below safe operating limits, and, therefore, are not acceptable.

1-388. The 3/8- and 9/16-inch OD superpressure tubing can be bent only with difficulty, but it is frequently economical to do so when suitable equipment is at hand. When accurate alignment is required and distances are short, it is preferable to use superpressure elbows instead of bending the heavy-walled tubing.

1-389. Provisions must be made for the expansion of heated tubing, since the tubing is rigid enough to create severe stresses. Both 3/8- and 9/16-inch OD tubing can be bent around a circle having a 3-inch radius. When it is necessary in special installations to make bends less than the minimum bend radius mentioned above, anchors will be required within 12 inches of each end of the bend as a safety measure. Temporary bends are not made in 3/8-or 9/16-inch OD superpressure tubing, since subsequent bending may weaken it. Prebent tubing that cannot be used will not be reshaped in any way.

1-390. JOINTS AND CONNECTIONS. All joints and connections must be made with superpressure-type fittings when using superpressure tubing. The proper and careful use of the adjustable thread cutter provided by the supplier is a must because of the need for proper cut and tight fitting threads in systems of very high pressures. The thread cutter should be adjusted for progressive cuts, (minimum two). For connecting

the tubing and fittings, the ends of the tubing must be prepared, first by turning the ends to a cone, and second by threading the ends with a left-hand thread to take the inner sleeve of the coupling. Before attempting to cut finished cone, be sure the blade in the cutter is properly seated and tight to ensure proper degree of bevel. Refer to paragraph 1-557 for detail procedures for preparing superpressure tubing for fittings.

1-391. TOOLS. The special tools manufactured by the suppliers will be used in the preparation of superpressure tubing and fittings. Refer to paragraph A-28 for a list of approved tools. Before these tools are used, an examination for any damage to cutting edges will be made since poor threads may cause leaks or failure of the fittings.

1-392. WELDED TUBING.

1-393. Weight reduction is not normally of primary concern in high-pressure systems. Welding of thin-walled tubing is not generally utilized.

1-394. Corrosion, heat-resistant, and low carbon steels may be welded by all the common welding methods except hammer or forge welding. Metal process, atomic hydrogen, inert arc (heliarc), resistance processes such as spot and flash welding, and gas welding are all suitable methods. Metal arc welding is suitable down to approximately 18 gage; however, lighter wall tubing is more conveniently and better welded by using atomic hydrogen, Heliarc, or the oxyacetylene processes.

1-395. When it is necessary to weld thin-walled tubing, the requirements shall be as listed in paragraph 1-501.

1-396. HANGERS, SUPPORTS, AND TIEDOWNS.

1-397. GENERAL REQUIREMENTS.

1-398. The fabrication details and design of pipe anchors, hangers, supports and tiedowns shall be in accordance with all safety requirements and ASA code for pressure piping. On systems of 3,000 psi or above, split blocks similar to those in Figure 1-66 or similar restraints conforming to paragraph 1-422 shall be used. Interlocking clamps with KEL-F or Teflon inserts are recommended for tubing runs where expansion and contraction make slippage desirable. KEL-F or Teflon shall not be used where system temperatures exceed 300° F.

1-399. The standards herein are the minimum requirements in fabrication and use of hangers and supports of plumbing lines. Construction equal to, or better than, that required by this section is mandatory.

1-400. MATERIAL REQUIREMENTS.

1-401. All equipment for permanent hangers and supports shall be fabricated from durable materials for the service conditions involved. Where this equipment is subject to atmospheric conditions, or conditions likely to cause deterioration or corrosion, it shall be protected from such harmful effects by painting or other suitable preservative means.

1-402. STEEL AND WROUGHT IRON. This iron shall be used throughout in the fabrication of hanger rods, turnbuckles, beam clamps, pipe clamps, straps, supports, rollers, guides, bases, and all other parts used for the support of piping, except under conditions which cause excessive corrosion of the iron.

1-403. CAST IRON. This iron may be used for the fabrication of roller bearing bases, rollers, guides, anchor bases, brackets, and parts of piping supports upon which the load will be mainly that of compression. Cast iron shall not be used for hanger rods, turnbuckles, clamps, or any part which will be subjected principally to tension loads.

1-404. MALLEABLE IRON CASTINGS. Suitable design may be used for pipe clamps, beam clamps, hanger flanges, clips, bases, swivel rings, and similar parts of pipe supports, but their use shall be limited to such cases where the operating temperature of the pipe line will not exceed 450°F (234°C).

1-405. CORROSION-RESISTANT METALS. Nonferrous metals or corrosion-resistant steel alloys should be used to support piping under conditions causing excessive corrosion of ordinary steel or wrought iron. Cast iron or malleable iron casting, if warranted as a protection against the expected corrosion, may also be used, but its use shall be subjected to the requirements of paragraphs 1-403 and 1-404.

1-406. LIMITATIONS.

1-407. Supports shall prevent excessive variation of supporting effort and possible resonance with imposed vibrations. The construction shall also be such that complete release of the piping load will be impossible in the case of spring failure or misalignment.

1-408. All parts of the supporting equipment shall be fabricated and assembled so that they will not be disengaged by movement of the supported piping.

1-409. Piping, straps, or bars equal in strength to the equivalent hanger rod may be fabricated for use in lieu of hanger rods.

1-410. Hangers used for the support of piping of 2-inch nominal pipe size and larger shall be fabricated to permit adequate adjustment after erection, while still supporting the load. Exception to this may be made in cases where hangers are to be used for the support of piping requiring exact grades for which they may be fabricated as rigid hangers.

1-411. Screw adjustments shall be fabricated so that all threaded members will have a true and complete depth of thread. The turnbuckle or adjusting nut shall have its full length of thread in service while in use and the amount of adjustment shall be plainly visible at all times. All screw or equivalent adjustments shall be provided with suitable locking features.

1-412. FABRICATION PROCEDURES.

1-413. STRAPS. Straps shall be limited to the minimum dimensions as indicated in figure 1-64.

1-414. HANGER RODS. Hanger rods shall be limited to a minimum diameter as follows:

a. For supporting pipe of 2-inch nominal size or smaller, 3/8-inch diameter.

b. For supporting pipe of 2-1/2-inch nominal size or larger, 1/2-inch diameter.

1-415. Rods exposed to weather or corrosive elements shall be fabricated of materials described in paragraph 1-405 or have protective coating as stated in paragraph 1-428.

1-416. BOLTED PLATE CLAMPS. Bolted plate clamps used in connection with rod hangers, shall have a minimum thickness as follows:

a. For weather-protected locations, 3/16-inch.

b. For parts exposed to the weather, 1/4-inch.

1-417. Bolts used for these clamps shall be of the same diameter as the hanger rod.

1-418. SUPPORTS PERMITTING PIPE MOVEMENT.

1-419. When expansion or contraction of piping will be produced by reason of conveying fluids at temperatures above or below the installation temperature or by other cause, hangers and supporting equipment shall be fabricated and assembled to permit free movement of this piping. This should be accomplished by the use of long rod hangers, spring hangers, hangers or supports fitted with rollers, machined blocks, elliptical or circular rings of larger diameter than the pipe causing contact only at the bottom, trolley

PIPE NOMINAL SIZE (INCHES)	INTERIOR INSTALLATION		EXPOSED TO WEATHER	
	THICKNESS (INCH)	WIDTH (INCH)	THICKNESS (INCH)	WIDTH (INCH)
1 or smaller	1/16	3/4	1/8	1
Above 1	1/8	1	1/4	1

Figure 1-64. Strap Dimensions

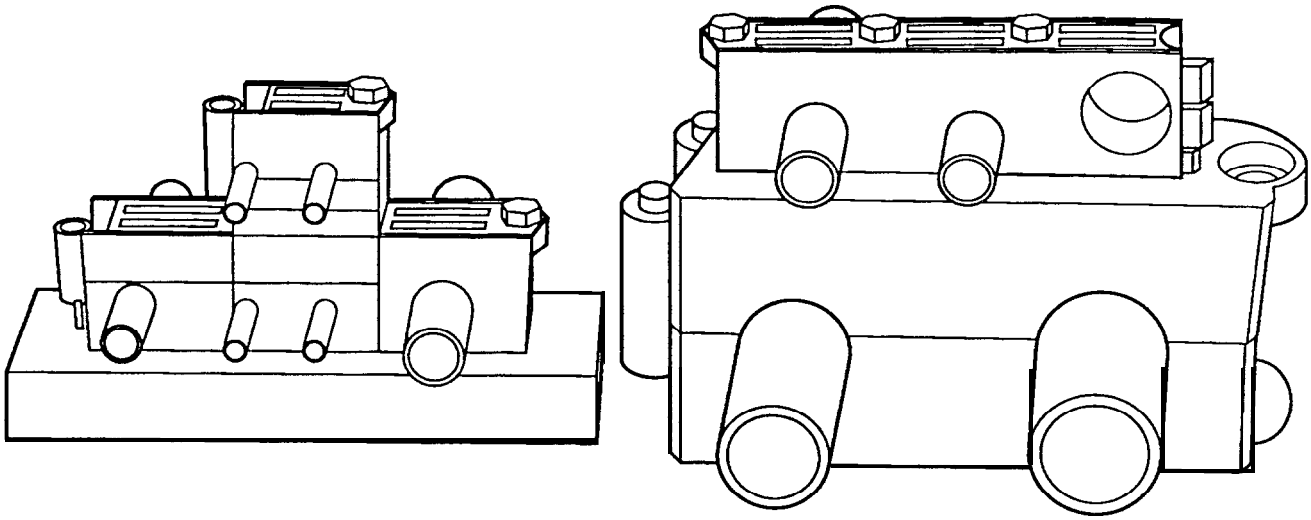

Figure 1-65. Interlocking Clamp Installation

hangers, or equivalent. Rolling supports shall be accurately made, properly guided, and shall roll freely at operating temperatures. Hanger rods shall be provided with welded or forged eyes, pivoting clamps, T-heads with suitable sockets, or equivalent. In all cases, allowance shall be made for rod clearance to permit swinging without setting up severe bending action in the rods. When pipe is covered by insulation, a suitable metal shield, properly constructed and secured to the covered pipe, should be used to protect the covering at points where the pipe is supported on movable rolling supports or in larger diameter rings, except that, where the nature of the materials permits, the pipe may rest directly on the insulation without metal supports.

1-420. FABRICATION STANDARDS.

1-421. Design and fabrication of hangers and supports shall be similar to those shown in figures 1-67 and 1-68.

1-422. ANCHORS AND GUIDES.

1-423. Where line restraint is required, anchors, guides, pivots or restraints shall be fabricated and assembled in such a form as to secure the desired points of piping in relatively fixed positions. They shall permit the line to expand and contract freely in opposite directions away from the anchored or guided point, and shall be designed to withstand the thrust, torsional forces, load conditions of operation and shall contain the line in case of line failure. Thrust on the line in case of failure shall be calculated at two times the available thrust. Available thrust is the cross section area of the line opening multiplied by the pressure in pounds per square inch (PSI).

1-424. Where corrugated or slide type expansion joints are used, anchors shall be provided to force the expansion movement into the joint, with such anchors designed to withstand a force equal to twice the product of the maximum internal area times the maximum pressure in the line. In all cases the allowable stresses in the line shall not exceed those specified by ASA B31.1-1955, paragraph 607.

1-425. All lines containing expansion joints shall be properly guided to direct movement into the expansion joint.

1-426. Steel or wrought iron shall be used throughout in the fabrication of hanger rods, turnbuckles, straps, beam clamps, pipe clamps, supports, rollers, guides, bases, and all other parts used in support of pressure piping unless dictated otherwise by material incompatibility. When the system is subjected to tension loads, temperature, or other environmental conditions for carbon steel, select steel alloys suitable for use under the specified conditions.

Description of Clamp	Federal Stock No.	Description of Clamp	Federal Stock No.
1/4” Tube	5340 872 1957	1 1/2” Tube w/Teflon	5340 872 4026
3/8” Tube	5340 872 1958	1-3/4” Tube w/Teflon	5340 872 1975
1/2” Tube	5340 872 1959	2” Tube w/Teflon	
9/16” Tube	5340 872 1960	3/8” Pipe	5340 872 1976
3/4” Tube	5340 872 1961	1/2” Pipe	5340 872 1977
1” Tube	5340 872 1962	3/4” Pipe	5340 872 1978
1/4” Tube w/Teflon	5340 872 1963	3/8” Pipe w/Teflon	5340 872 1979
3/8” Tube w/Teflon	5340 872 1964	1/2” Pipe w/Teflon	5340 872 1980
1/2” Tube w/ Teflon	5340 872 1965	3/4” Pipe w/Teflon	5340 872 1981
9/16” Tube w/Teflon	5340 872 4025	3/4” Pipe	5340 872 1982
3/4” Tube w/Teflon	5340 872 1966	1” Pipe	5340 872 1983
1” Tube w/Teflon	5340 872 1967	1 1/4” Pipe	5340 872 1984
1” Tube	5340 872 1968	1-1/2” Pipe	5340 872 1985
1 1/4” Tube	5340 872 1969	2” Pipe	
1 1/2” Tube	5340 872 1970	3/4” Pipe w/Teflon	5340 872 1986
1-3/4” Tube	5340 872 1971	1” Pipe w/Teflon	5340 872 1987
2” Tube	5340 872 1972	1 1/4” Pipe w/Teflon	5340 872 1988
1” Tube w/Teflon	5340 872 1973	1 1/2” Pipe w/Teflon	5340 872 1989
1 1/4” Tube w/Teflon	5340 872 1974	2” Pipe w/Teflon	

Figure 1-66. Clamps, Description/Federal Stock No.

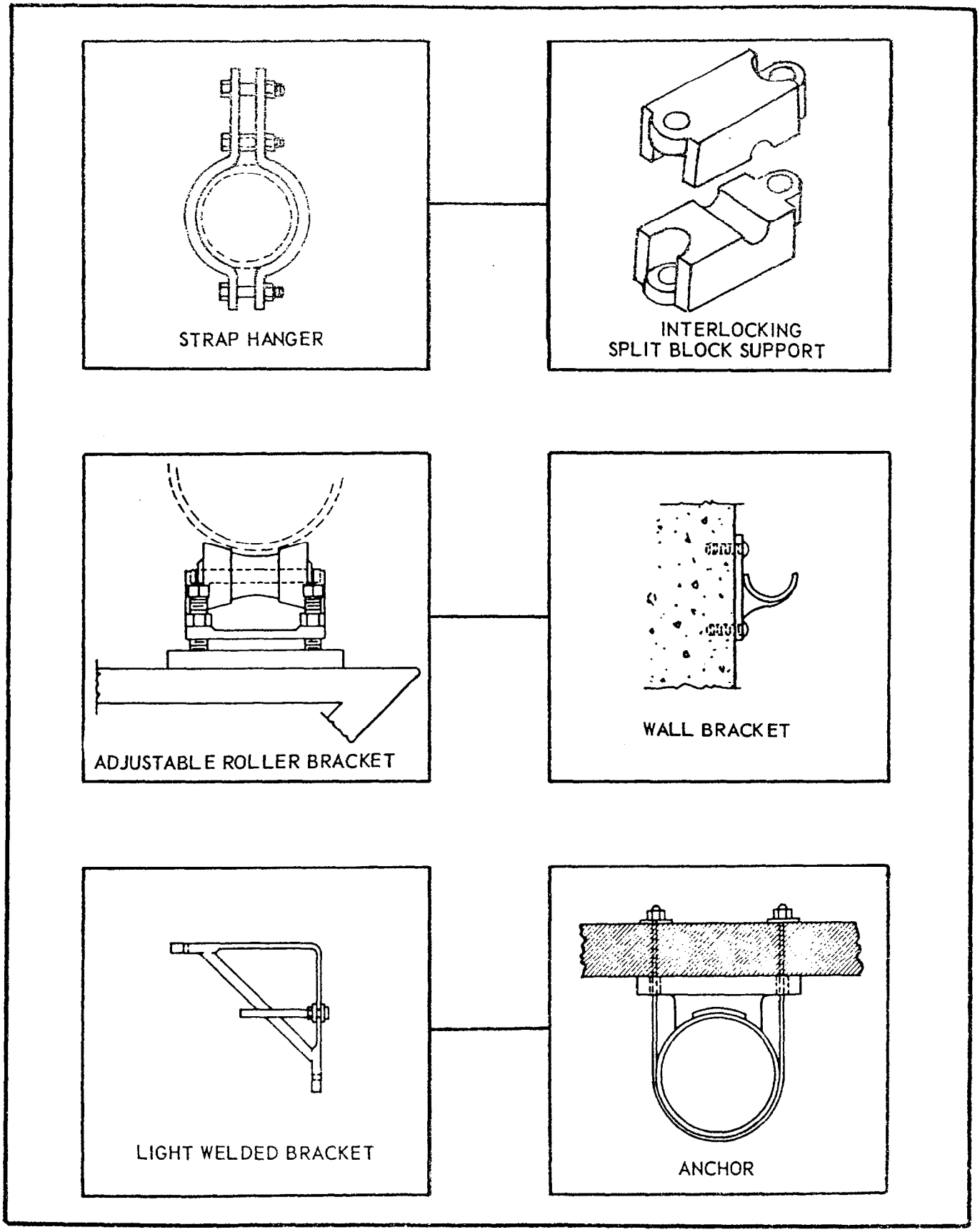

Figure 1-67. Hangers, Brackets, and Anchor

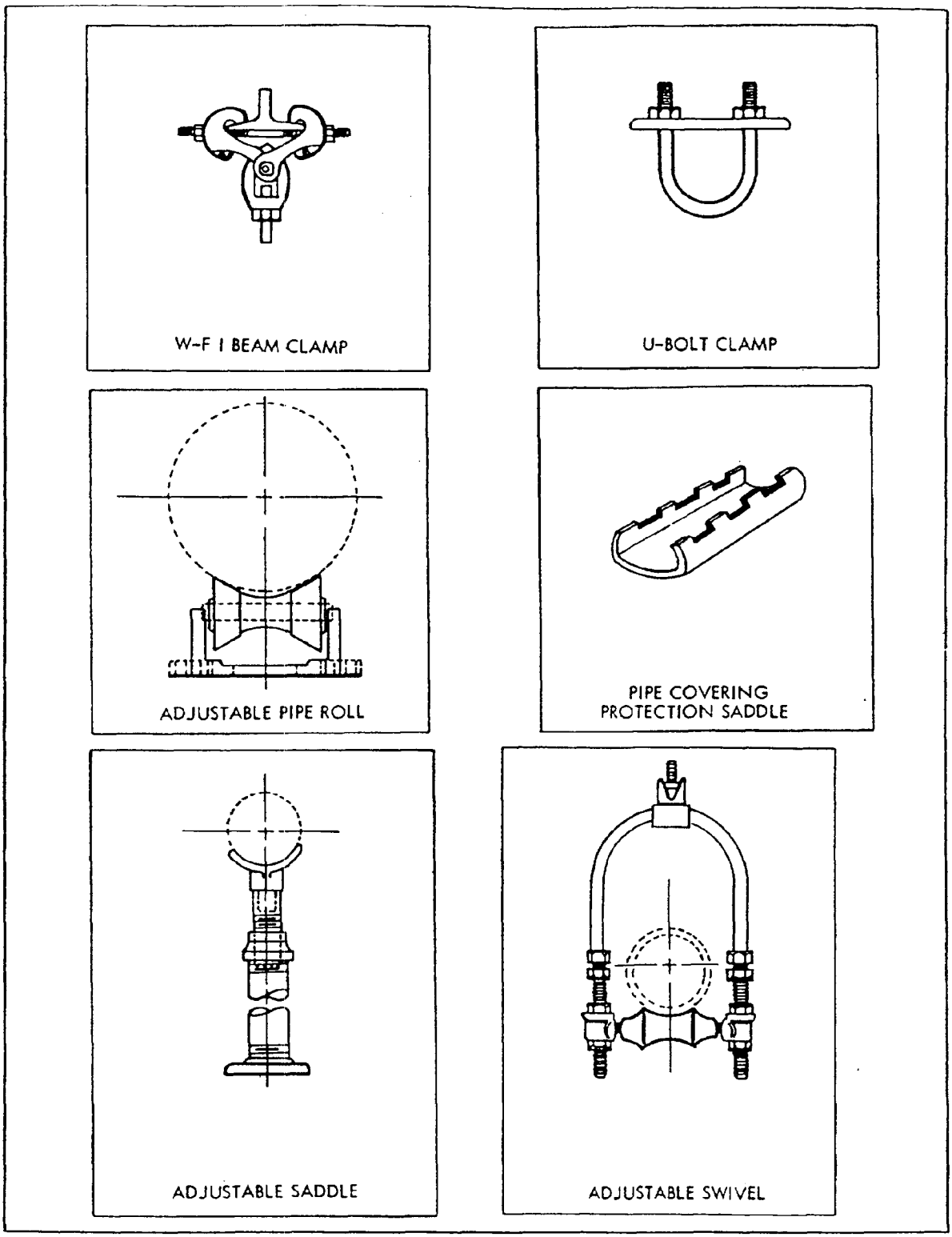

Figure 1-68. Clamps, Saddles, and Pipe Rolls

1-427. The interlocking clamp installation shown in Figure 1-65 is recommended for all new installations on systems rated 3000 psi and above.

1-428. PROTECTIVE COATINGS.

1-429. Under conditions causing atmospheric rusting or slight corrosion, corrosion-resistant materials need not be used, but a protective coating such as a hot-dipped galvanizing, weather-resistant paint, or other suitable protective coating shall be applied after fabrication to all parts where required. Where conditions exist, causing no material corrosion, corrosion-resistant materials need not be used, but it is required that a suitable paint or other durable protective coating be applied to all parts after installation.

1-430. Under any conditions, exposed screw threads, when not fabricated of corrosion-resistant materials, shall be greased immediately after fabrication. Paints, slushes, or other suitable protective coating be used instead of grease.

1-431. FLEX HOSE.

1-432. When fabricating hose assemblies with rubber protective covered hose used in pneumatic service the covering should be pricked with a pin every three inches to relieve escaping seepage. If blisters form during use, prick the blister as required to return hose to original shape.

1-433. FABRICATION OF FLEX HOSE WITH REUSABLE (DETACHABLE) FITTINGS.

NOTE

This paragraph applies only to hose with detachable fittings. In many missile applications special assemblies are provided. This type of hose, when damaged, should be discarded and replaced with new hose from stock.

1-434. CUTTING HOSE. Cut hose to desired length by placing hose in a vise and cutting it off square with a fine-tooth-bladed hacksaw, or an abrasive cut-off wheel with a slow gradual feed. Hose assembly length is defined as the length from the tip end of one flare on the swivel nut to the tip end of the flare on the opposite end. To determine the proper length to cut the hose for a required hose assembly length, subtract the dimension given in figure 1-69 for the size of hose from the required hose assembly length. This dimension takes care of both ends of the hose.

1-435. The following tolerances are allowed on hose lengths:

a. Up to 18 inches . . . . . .±1/8-inch.

b. 18 to 36 inches . . . . . .±1/4-inch.

c. Over 36 inches . . . . . .±1 percent.

1-436. STRIPPING HOSE. Strip hose in accordance with the following procedure:

a. Locate and mark off cutting point of cover to be stripped, using fitting to be attached as a guide.

b. Cut around hose through outer cover at cutting mark. Be sure cut is down to wire braid all the way around.

c. Slit outer cover lengthwise from cutting mark to end of hose. Grip raised flap firmly with pliers and twist off cover.

d. Clean exposed end with wire scratch brush or wire wheel until wire braid is free of all exposed rubber particles left from removal of outer cover.

CAUTION

Care must be taken that the wire braid is not frayed when it is brushed.

1-437. ASSEMBLING HOSE. To correctly assemble the fitting and hose, proceed as follows:

a. Place socket in vise and screw hose into socket counterclockwise until hose bottoms.

NOTE

All fittings will normally be assembled dry. If any lubrication is required to facilitate assembly, only water will be used.

HOSE SIZE	DIMENSION (INCHES)
4	1-13/16
6	1-7/8
8	2-3/32
12	3-1/16
16	3-27/32
20	4-11/32
24	4-17/32
32	4-27/32

Figure 1-69. Hose Length Dimensions

b. Screw nipple into hose, using wrench on hex.

NOTE

Allow not more than 1/16-inch clearance and not less than 1/32-inch clearance between socket and nut or hex.

1-438. An approved hose line assembly machine for the installation of fittings to the hose should be used in the fabrication of hoses to assure proper fit and seal (Aeroquip Model 1598 or F2151).

1-439. TEFLON HOSE.

1-440. Although the requirements for medium- and high-pressure Teflon and the requirements for medium- and high-pressure rubber are basically the same, the Teflon hose has some advantages. These advantages are (1) there is no shelf life on Teflon hose, (2) there is no time change on medium-pressure Teflon hose, and (3) Teflon is chemically inert. The only disadvantage in the use of Teflon is the higher cost and possibility of cold flow at fittings. The hose is generally classified in the medium pressure range (1,500 psig maximum) and the medium pressure range (3,000 psig maximum). The service temperature is generally listed at from -65° F to + 450° F (-54 to +234°C). This hose should be specified for systems with wide temperature range. The supplier's tables list the maximum working pressure for the various sizes and pressure classifications.

1-442. This type of hose of Teflon was designed specifically for very high-pressure charging systems where superior vibration, resistance to volumetric expansion, and high-temperature resistance are essentials in a hose. It is easily cleaned and dehydrated because the tube is non-absorptive and anti-adhesive. It is also chemically inert to most missile fuels and oxidizers. It retains great flexibility, though it is very sturdily constructed to take rough handling. The inner tube is a heavy gage extruded Teflon tube. Reinforcement is by multiple plies of synthetically braided, spirally wound type 302 (Aeronautical Military Specification AMS 5688) stainless steel wire over, full coverage braided stainless inner layer. The outer cover is braided type 302 (AMS 5688) stainless steel wire. This hose can be supplied with superpressure fittings. Specification MIL-H-25579 covers Teflon hose.

1-442. HIGH DENSITY POLYETHELENE.

1-443. This type hose is designed for use as a component of high-pressure pneumatic ground support equipment used in aircraft and missile servicing applications. This hose is available in two pressure ranges: 4,000 psig (Specification MIL-H-26666) and 8,500 psig (Specification MIL-H-27462). The service temperature range is -65° to +160° F. The inner tube consists of a high density polyethelene compound of seamless construction and uniform gage. It is constructed so as to permit the least possible effusion of compressed gases.

1-444. FIRE-RESISTANT, HIGH-PRESSURE HOSE.

1-445. Aeroquip hose No.1546 or equivalent is specifically designed as a fire-resistant, high-pressure hose for hydraulic fluids. This hose is especially designed to handle phosphate-ester base fluids which are destructive to the inner tubes of most hose lines such as Aeroquip No. 1508 and 1509.

1-446. USE LIMITATION. This type of hose cannot be placed in service where petroleum-based oils are used.

1-447. CONSTRUCTION. This hose is constructed of synthetic butyl rubber inner tube; partial cotton wrap; multiple spiral steel wire ply reinforcement; and green synthetic rubber outer cover.

1-448. IDENTIFICATION. This hose is identified by a green cover with white markings; manufacturer's construction code with Aeroquip 1546, ID size X2W, and quarter year and year of manufacture, all to be repeated every 14 inches.

1-449. Hose No. 1546 uses the same fittings as No.1509 (paragraph 1-433).

1-450. EXPANSION MEMBERS.

1-451. Many high-pressure piping systems, especially cryogenic, are subjected to abnormal temperature gradients. Where this condition exists, expansion ,members are required to prevent damage to the system. Expansion members are generally divided into two categories; the expansion joint and the offset bend or expansion loop as illustrated in figure 1-70. Generally, where space permits, the offset bend or loop is used in preference to the expansion joint.

1-452. EXPANSION JOINTS.

1-453. This joint is made in several types (axial, hinged, or gimbaled), and is a specialty item fabricated by only a few suppliers. Where it is necessary to use this type of joint, it should be ordered with threaded, flanged, or weld ends to meet the specific requirement. The supplier's recommendations should be followed for fabrication methods.

1-454. BENDS AND EXPANSION LOOPS.

1-455. This type of expansion member is used widely in piping systems. The method of fabrication generally follows that for the rest of the system, which is outlined in detail under tubing and piping.

1-456. TORQUING RECOMMENDATIONS AND PROCEDURES.

1-457. GENERAL.

1-458. The effectiveness of a threaded fastener usually depends on the degree to which it is initially tightened, and in some applications the amount of prestressing, within a narrow range of tension, is critical. (Refer to Specification MIL-F-5509 for fittings.)

1-459. Factors affecting the maintenance of bolt tension are the proportion of seating area to thread cross section, elastic properties of the seating material, stretch of the bolt, or creep of the bolt under load. The use of washers or other springy members of a fastener assembly tends to reduce the amount of external load that can be applied to a prestressed fastener before the load becomes additive to the initial bolt tension.

1-460. In the practical application of fasteners, there are five generally used methods for setting bolt tension, as follows:

a. Micrometer method in which bolt ends of the bolt must be accessible to measure the change in the over-all length of the bolt.

b. Torque measurement method which requires that the torque-tension relationship be established for the specific conditions of assembly.

c. Angular turn-of-nut method.

d. Use of special devices for controlling tension.

1-461. RECOMMENDATIONS.

1-462. Bolts and/or nuts used in some applications (pipe flanges, pressure vessel heads and manholes, etc.) should be torque stressed by one of the methods herein and to the appropriate torque values as referenced in figures 1-71 and 1-72. Refer to figure 1-73 to convert torque values in figures 1-71 and 1-72 to units compatible with torque wrench scale.

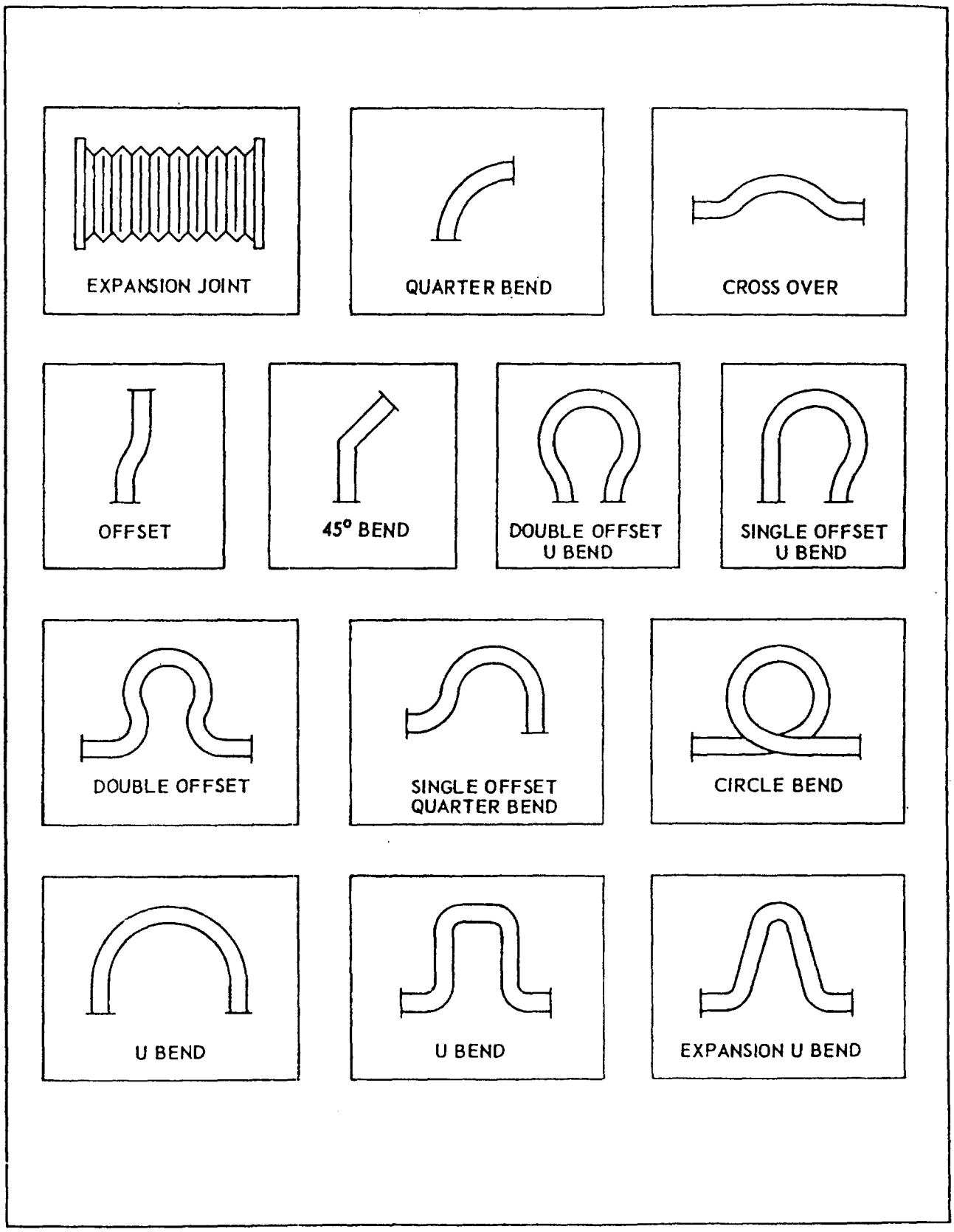

Figure 1-70. Expansion Members

BOLT SIZE	TORQUE LIMITS RECOMMENDED FOR INSTALLATION (BOLTS LOADED PRIMARILY IN SHEAR)		MAXIMUM ALLOWABLE TIGHTENING TORQUE LIMITS	
	TENSION-TYPE NUTS MS20365 AND AN310- (40,000 PSI IN BOLTS)	SHEAR-TYPE NUTS MS20364 AND AN320 24,000 PSI IN BOLTS)	NUTS MS20365 AND AN310 (90,000 PSI IN BOLTS)	NUTS MS20364 AND AN320 54,000 PSI IN BOLTS)
	INCH-POUNDS	INCH-POUNDS	INCH-POUNDS	INCH-POUNDS
8-36	12 - 15	7 - 9	20	12
8-32	12 - 15	7 - 9	20	12
10-32	20 - 25	12 - 15	40	25
10-24	20 - 25	12 - 15	35	21
1/4-28	50 - 70	30 - 40	100	60
1/4-20	40 - 50	25 - 30	75	45
5/16-24	100 - 140	60 - 85	225	140
5/16-18	80 - 90	48 - 55	160	100
3/8-24	160 - 190	95 - 110	390	240
3/8-16	160 - 185	95 - 100	275	170
7/16-20	450 - 500	270 - 300	840	500
7/16-14	235 - 255	140 - 155	475	280
1/2-20	480 - 690	290 - 410	1,100	660
1/2-13	400 - 480	240 - 290	880	520
9/16-18	800 - 1,000	480 - 600	1,600	960
9/16-12	500 - 700	300 - 420	1,100	650
5/8-18	1,100 - 1,300	600 - 780	2,400	1,400
5/8-11	700 - 900	420 - 540	1,500	900
3/4-16	2,300 - 2,500	1,300 - 1,500	5,000	3,000
3/4-10	1,150 - 1,600	700 - 950	2,500	1,500
7/8-14	2,500 - 3,000	1,500 - 1,800	7,000	4,200
7/8-9	2,200 - 3,000	1,300 - 1,800	4,600	2,700
1-14	3,700 - 5,500	2,200 - 3,300*	10,000	6,000
1 1/8-12	5,000 - 7,000	3,000 - 4,200*	15,000	9,000
1 1/4-12	9,000 - 11,000	5,400 - 6,600*	25,000	15,000

NOTE

The above torque values may be used for all cadmium-plated nuts of the fine or coarse thread series which have approximately equal number of threads and equal face bearing areas.

* Estimated corresponding values.

Figure 1-71. Recommended Torque Values for Oil-Free, Cadmium-Plated Threads

BOLT SIZE	18-8 SST	BRASS	SI BRONZE	AL 2024-T4	316 SST	MONEL
	Inch-Pounds	Inch-Pounds	Inch-Pounds	Inch-Pounds	Inch-Pounds	Inch-Pounds
2-56	2.5	2.0	2.3	1.4	2.6	2.5
2-64	3.0	2.5	2.8	1.7	3.2	3.1
3-48	3.9	3.2	3.6	2.1	4.0	4.0
3-56	4.4	3.6	4.1	2.4	4.6	4.5
4-40	5.2	4.3	4.8	2.9	5.5	5.3
4-48	6.6	5.4	6.1	3.6	6.9	6.7
5-40	7.7	6.3	6.1	4.2	8.1	7.8
5-44	9.4	7.7	8.7	5.1	9.8	9.6
6-32	9.6	7.9	8.9	5.3	10.1	9.8
6-40	12.1	9.9	11.2	6.6	12.7	12.3
8-32	19.8	16.2	18.4	10.8	20.7	20.2
8-36	22.0	18.0	20.4	12.0	23.0	22.4
10-24	22.8	18.6	21.2	13.8	23.7	25.2
10-32	31.7	25.9	29.3	19.2	33.1	34.9
1/4-20	75	62	69	46	79	85
1/4-28	94	77	87	57	99	106
5/16-18	132	107	123	80	138	149
5/16-24	142	116	131	86	147	160
3/8-16	236	192	219	143	247	266
3/8-24	259	212	240	157	271	294
7/16-14	376	317	349	228	393	427
7/16-20	400	327	371	242	418	451
1/2-13	517	422	480	313	542	584
1/2-20	541	443	502	328	565	613
9/16-12	682	558	632	413	713	774
9/16-18	752	615	697	456	787	885
5/8-11	1,110	907	1,030	715	1,160	1,330
5/8-18	1,244	1,016	1,154	798	1,301	1,482
3/4-10	1,530	1,249	1,416	980	1,582	1,832
3/4-16	1,490	1,220	1,382	958	1,558	1,790
7/8-9	2,328	1,905	2,140	1,495	2,430	2,775
7/8-14	2,318	1,895	2,130	1,490	2,420	2,755
1-8	3,440	2,815	3,185	2,205	3,595	4,130
1-14	3,110	2,545	2,885	1,995	3,250	3,730
	Foot-Pounds	Foot-Pounds	Foot-Pounds	Foot-Pounds	Foot-Pounds	Foot-Pounds
1 1/8-7	413	337	383	265	432	499
1 1/8-12	390	318	361	251	408	470
1 1/4-7	523	428	485	336	546	627
1 1/4-12	480	394	447	308	504	575
1 1/2-6	888	727	822	570	930	1,064
1 1/2-12	703	575	651	450	732	840

Figure 1-72. Recommended Torque Values for Dry or Near Dry Threads

INCH-GRAMS	INCH-OUNCES	INCH-POUNDS	FOOT-POUNDS	CENTIMETER-KILOGRAM	METER-KILOGRAM
7.09	1/4				
14.17	1/2				
21.26	3/4				
28.35	1				
113.40	4	1/4			
226.80	8	1/2			
453.60	16	1		1.15	
	96	6	1/2	6.91	
	192	12	1	13.82	0.138
	384	24	2	27.64	0.276
	576	36	3	41.46	0.415
	768	48	4	55.28	0.553
	960	60	5	69.10	0.691
		72	6	82.92	0.829
		84	7	96.74	0.967
		96	8	110.56	1.106
		108	9	124.38	1.244
		120	10	138.20	1.382

Figure 1-73. Torque Conversion Chart

NOTE

Bolts may be individually tightened in excess of initial torque as required to stop leakage.

1-463. METHODS AND PROCEDURES.

1-464. MICROMETER METHOD. When a bolt is tightened, it elongates as the tension in the bolt is increased. Since the modulus of elasticity is practically constant at 29,500,000 psi for all steels at room temperature, the following formula applies:

$$e = \frac{S L_e}{E}$$

where:

e = elongation, inches.
S = desired stress in bolt, psi.
L_e = effective length, inches (see figure 1-73.)
E = modulus of elasticity, psi.

Example: For an effective length (Le) of five inches and a desired stress (S) of 45,000 psi; determine elongation of a steel bolt as follows:

$$e = \frac{45{,}000}{29{,}500{,}000} \times 5 = 0.0076\text{-inch}$$

1-465. To apply this method when both ends are accessible, the length of the bolt is measured by a micrometer before it is tightened. (See figure 1-74) The bolt is then tightened until it

has elongated the required amount. When both ends of a fastener are not accessible for measurement, if the diameter of the bolt or stud is sufficiently large, an axial hole may be drilled in it. (See figure 1-74). The tension can be determined by applying a micrometer depth gage to determine the change in depth of the hole during tightening of the fastener.

1-466. The micrometer method is applicable for bolts that are threaded their entire length or for bolts that are so designed that the elongation will be uniform throughout the length. This method is not practical for general use, but may be used for spot checking. It may also be applicable in establishing torque-tension relationships when a tensile testing machine is not available.

1-467. TORQUE MEASUREMENT METHOD. For many applications the tension may be controlled within satisfactory limits by applying known torques in tightening the nuts on bolts or studs. Satisfactory torque-tension relationships may be established for a given set of conditions, but the change of any one variable may alter the relationship markedly. Because of the fact that most of the applied torque is absorbed in indeterminate friction, a change in the surface roughness of the bearing surfaces or of the threads, or a change of lubrication, will drastically affect the friction and thus the torque relationship. It must be recognized that a given torque will not always produce a definite stress in the bolt but will probably induce a stress that lies in a stress range that is satisfactory. The torque-tension relationship for a given set of conditions may be established by means of a torque wrench in combination with a tensile testing machine or by the micrometer method described above.

1-468. Torque values for aircraft-type nuts are given in figure 1-71. For more complete information on torque values for cadmium-plated hardware, refer to TO 1-1A-8.

1-469. Maximum torque values for bolts in the dry or near dry condition for various materials are listed in figure 1-72. The ASTMA 193 bolt-stud and ASTMA 194 nut combination are recommended for high-pressure systems other than cryogenic. Stress in bolts for various loadings is tabulated in figure 1-75. These values are for lubricated bolts. Nonlubricated bolts have an efficiency of approximately 50 percent of well-lubricated bolts. Where possible, it is recommended that the initial bolt stress be approximately 45,000 psi.

1-470. When adapters are used on torque wrenches, the difference in mechanical values must be considered in determining the dial reading which will give the specified torque at the nut being tightened. The following formula is used to determine dial reading or torque setting to achieve desired torque (figure 1-74):

$$s = \frac{TL_a}{L_a + E_a}$$

where:

S = handle setting.

T = torque applied at the end of adapter.

L_a = length of handle in inches.

E_a = length of adapter in inches.

1-471. For example, if it is desired to exert 100 inch-pounds at the end of the wrench and adapter, when L_a equals 12 inches and E_a equals 6 inches, it is possible to determine the dial reading by making the following calculation:

$$S = \frac{TL_a}{L_a + E_a} = \frac{100 \times 12}{12 + 6} = \frac{1{,}200}{18} = 66.6 \text{ inch-pounds}$$

1-472. At times it is necessary to calculate the wrench dial reading for several torques, using the same wrench and adapter assembly. In such cases a conversion constant (C) for the assembly will simplify calculations and may be derived as follows:

$$c = \frac{L_a}{L_a + E_a}$$

1-473. Whenever possible, attach the adapter in line with the torque wrench. When necessary to attach the adapter at any angle to the torque wrench as shown in figure 1-74, the effective length of the assembly will be $L_a + E_b$ as shown in figure 1-73. In this instance, length E_b must be substituted for length E_a in the formula.

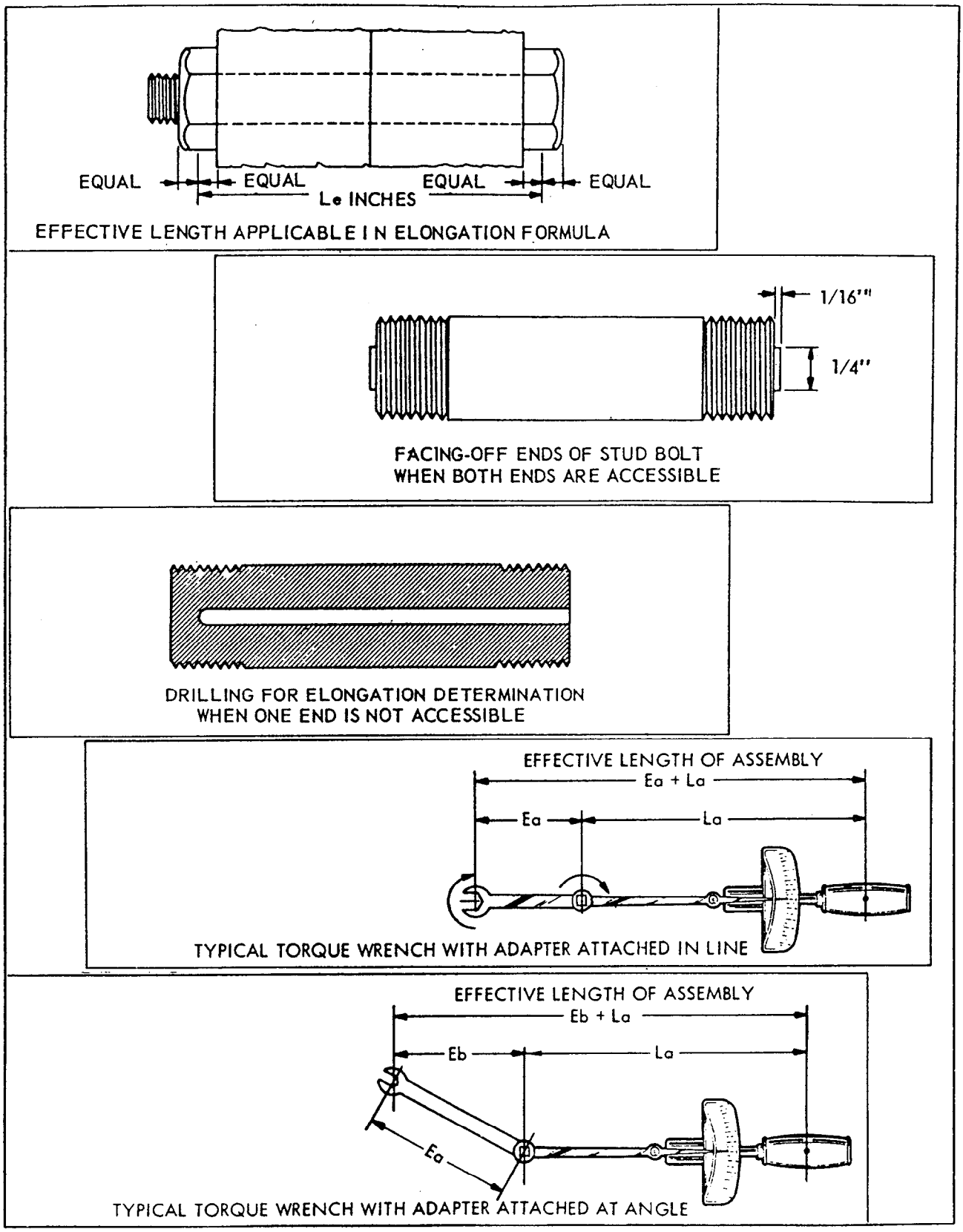

Figure 1-74. Torquing Recommendations

BOLT DIAMETER (INCHES)	STRESS					
	30,000 PSI		45,000 PSI		60,000 PSI	
	TORQUE Foot-Pounds	COMPRESSION Pounds	TORQUE Foot-Pounds	COMPRESSION Pounds	TORQUE Foot-Pounds	COMPRESSION Pounds
1/4-20	4	810	6	1,215	8	1,620
5/16-18	8	1,350	12	2,025	16	2,700
3/8-16	12	2,040	18	3,060	24	4,080
7/16-14	20	2,790	30	4,185	40	5,580
1/2-13	30	3,780	45	5,670	60	7,560
9/16-12	45	4,860	68	7,290	90	9,720
5/8-11	60	6,060	90	9,090	120	12,120
3/4-10	100	9,060	150	13,590	200	18,120
7/8-9	160	12,570	240	18,855	320	25,140
1-8	245	16,530	368	24,795	490	33,060
1 1/8-8	355	21,840	533	32,760	710	43,680
1 1/4-8	500	27,870	750	41,805	1,000	55,740
1 3/8-8	680	34,650	1,020	51,975	1,360	69,300
1 1/2-8	800	42,150	1,200	63,255	1,600	84,300
1 5/8-8	1,100	50,400	1,650	75,600	2,200	100,800
1 3/4-8	1,500	59,400	2,250	89,100	3,000	118,800
1 7/8-8	2,000	69,120	3,000	103,680	4,000	138,240
2-8	2,200	79,560	3,300	119,340	4,400	159,120
2 1/4-8	3,180	102,690	4,770	154,035	6,360	205,380
2 1/2-8	4,400	128,760	6,600	193,140	8,800	257,520
2 3/4-8	5,920	157,770	8,880	236,655	11,840	315,540
3-8	7,720	189,720	11,580	284,580	15,440	379,440

Alloy steel bolts ASTM A-193.

Alloy steel nuts ASTM A-194.

Figure 1-75. Load in Pounds on Alloy Steel Bolt-Studs When Torque Loads Are Applied to Lubricated Bolts

1-474. The proper sequence for tightening multiple fasteners on a single joint is important to obtain proper sealing and positioning. The following are recommended procedures:

a. Tighten all bolts somewhat beyond fingertight, making sure that mating surfaces are properly positioned and spaced. Torque all bolts in sequence around article.

b. When spacing and positioning are hard to determine because of offset stresses or crush gaskets, tighten all bolts fingertight.

c. Torque first bolt, then the opposite bolt. Rotate 30-90 degrees, depending on number of bolts; torque that bolt, then the one opposite. Rotate and repeat process until all bolts have been torqued. Recheck torque by going around in sequence.

d. Torque bolts in sequence around joint to a value above 10 percent below final torque; torque around in sequence at about 5 percent below final torque and then apply final torque in sequence.

1-475. ANGULAR TURN-OF-NUT METHOD. This procedure may be used in the installation of high-strength bolts in structures. The nut is first tightened to seat the contacting surfaces firmly. It is then loosened sufficiently, if deemed necessary, to just release the bolt tension. The nut is then tightened through a specified fraction of a turn to produce the required bolt tension. The angle through which the nut should be turned will be different for each bolt size, length, material, and threads per inch and will also vary with the elastic properties of the abutting materials.

1-476. USE OF SPECIAL DEVICES FOR CONTROLLING TENSIONS. There are some special proprietary devices available whose function is to accurately control the tension induced in the bolt. These devices are operative even when both ends of the fastener are not available for measurement. They are known as preload-indicating washers, load-sensitive screws, and tru-load bolts.

1-477. The preload-indicating washer consists of two concentric steel rings sandwiched between two close-tolerance, hardened steel washers. The inner ring is smaller in diameter and thicker than the outer by a predetermined amount. A known preload in the bolt is indicated when the inner ring is compressed to the point where the outer ring can no longer be moved freely by means of a pin inserted into one of the peripheral holes.

1-478. The load-sensitive screw has a special resistance-type strain gage potted axially at its center. The change in resistance of the strain gage is read on a calibrated potentiometer as actual bolt tension.

1-479. The tru-load bolt provides a positive means for indicating the actual tensile loading on a bolt by the amount of elongation. It consists of almost any kind of bolt modified to contain a pin inserted along the axis of the bolt. The pin is in contact with the bolt only at the inner end. The pin usually is made to be flush with the bolthead surface before loading. As the bolt is loaded, the elongation produced in the bolt causes the pin surface to move below the reference surface. This change in distance is converted directly into unit stress by gaging with a calibrated dial gage.

1-480. For some applications, it may be desirable to have the indicating pin extend above the top of the bolt before tightening. When the load is applied, the pin withdraws into the bolt. The length of the pin is such that when the full load has been applied, the pin will be drawn in until it is flush with the top of the bolt. A dial depth gage reading of zero then indicates full preload.

1-481. RELATION OF DRIVING TORQUE TO LENGTH OF ENGAGEMENT. Torques increase directly as the length of engagement. Research indicates that this increase is proportionately more rapid as size increases.

1-482. BREAKLOOSE TORQUES AFTER REAPPLICATION. There are no known established reapplication breakloose torques in cases where repeated usage is involved.

1-483. ASSEMBLY TORQUES FOR REAPPLICATION. There are no known established assembly torques for reapplication at the present time.

1-484. LUBRICATION OF BOLT-STUDS. When thread lubricant is used, the lubricant shall be compatible with materials of the affected system.

1-485. PRESSURE VESSELS.

1-486. Pressure vessels shall be fabricated in accordance with the requirements of section VIII, Unfired Pressure Vessels of the ASME Boiler and Pressure Vessel Code, or applicable local or state regulatory codes.

1-487. Cryogenic storage vessels are of double-walled construction with insulation between the two walls. The inner vessel, which contains the cryogenic fluid, must be made of materials that are compatible with the service fluid and each other at cryogenic temperatures (see figure 1-4) and provide adequate support for the cryogenic fluid. The insulation should be one of the types described in paragraph 1-309, dependent upon the requirements of the storage vessel. The outer shell is exposed only to ambient temperatures, so the low-temperature properties of the shell material are of little importance compared to the thermal conductivity. Minimum weight is desired, so the outer shell is usually made of light metal such as aluminum. Piping for transfer of the cryogenic fluid to and from the storage vessel must span the insulating space, resulting in a path for heat to be conducted into the inner vessel. The criteria for selecting this material is the same as for support members (paragraph 1-315).

1-488. CYLINDER OUTLET CONNECTIONS.

1-489. ICC compressed gas cylinders are furnished with a variety of outlet valve connections that have non-interchangeable connections to preclude inadvertent use of wrong product. The basic standards for outlet connections are established by the Compressed Gas Association (CGS), incorporated in their Pamphlet V-l, Compressed Gas Cylinder Valve Outlet and Inlet Connections. The pamphlet is also approved as an American Standards Association publication. ASA B57.1, 1953, and by the National Bureau of Standards, Screw-Thread Standards for Federal Services, Handbook H28, section IX. This standard was the basis for the preparation of Military Specification MIL-V-2 for use by the Military establishment.

CHAPTER 1

SECTION V

FABRICATION AND INSTALLATION OF SYSTEM

1-490. GENERAL REQUIREMENTS.

1-491. All piping shall be installed in strict accordance with the applicable requirements of the ASA code for pressure piping. However, whenever more rigid requirements are specified by the cognizant agency, they shall take precedence.

1-492. All piping and tubing shall be supported and contained by pipe anchors, hangers or split block supports to meet requirements of the ASA code and/or other applicable specifications. Flexible hose shall be contained in accordance with paragraph 1-628 of this technical order or by weighted sand bags or tiedowns spaced not more than six feet apart.

1-493. WORKMANSHIP.

1-494. High-pressure piping systems are inherently hazardous and demand the best in workmanship. Therefore, it is imperative that the system be installed in accordance with drawings and specifications in the best and most workmanlike manner by qualified, careful, and efficient workers in strict conformity with standard practices.

1-495. CLEANING.

1-496. Each component or section of a system shall be cleaned in accordance with paragraph 1-721 prior to installation. Many rocket propellants possess dangerous properties, necessitating strict adherance to cleaning procedures. To ensure proper cleaning, parts should be tagged with a form listing procedural steps and providing spaces for the mechanic and inspector to sign off the work accomplished. This will tend to eliminate inadvertent use of parts not properly prepared.

1-497. Weld-fabricated systems as well as other systems become very difficult, if not impossible, to clean to required limits of cleanliness after assembly because of long runs, complicated routings, and field fit-up problems. To aid in obtaining cleaner systems, the following procedures shall be used:

a. All pipe and fittings to be installed in weld-fabricated systems shall be cleaned before shop assembly and/or field fit-up.

b. Field fit-up items shall, if possible, be disassembled after fit-up, cleaned, and then reassembled. If design precludes disassembly, an Argon or Helium purge during welding operations is mandatory.

c. Tubing and fittings for flared, flareless, and superpressure systems shall be cleaned before final assembly.

d. Shop fabricated assemblies shall be cleaned before final assembly into a system. If used for fit-up, they may be treated in accordance with paragraph b. above.

e. Valves and other operating units shall be previously cleaned in the valve shop or by qualified contractor. If used to aid in field fit-up, they shall be disassembled after fit-up to the extent necessary for inspection, and recleaned only if determined necessary.

f. Careful attention shall be paid at all times to the manner or progress of assembly so that ends of systems and components are not left open when unattended or when work has to be delayed.

1-498. PACKAGING.

1-499. Immediately following cleaning, all components shall be protected in such a manner as to prevent contamination. Small parts may be placed in clean vinyl or polyethylene bags and heat sealed. Components with small openings shall be sealed with plastic or metal caps which have been cleaned. Large openings shall be closed with polyethylene sheet backed by plywood or hardboard securely taped in place.

1-500. WELDING.

1-501. All welding of piping systems shall be by a qualified welder in accordance with the requirements of TO 00-25-224 and all applicable regulatory local or state codes.

1-502. ROUTING OF PIPING.

1-503. All piping lines shall be routed in a direct line to the required unit. They shall be located or installed so that they are not damaged by movable equipment, are not hazardous to working personnel, and are accessible for maintenance. All welded pipe and tube lines fabricated in place

shall be installed with a minimum of six inches clearance between and/or building structure.

1-504. Piping lines shall not, under any circumstances be run indiscriminately about the area.

1-505. Piping lines should follow building lines and longitudinal lines of the test stands and be routed with existing groups of lines.

1-506. Piping lines should not be routed in a criss-cross manner or at various angles. Such routing results in difficulty in removal and maintenance of existing lines.

1-507. Liquid fluid lines should be routed in a gradual, direct, downgrade angle, where possible, with minimum sagging permitted. This is to prevent accumulation of trapped liquid fluids and allow draining of the lines.

1-508. Liquid piping lines shall not be attached or secured to electrical lines or conduits. A minimum spacing of two inches shall be maintained between an electrical conduit and a pressure line.

1-509. Fuel and oxidizer piping lines shall not be routed adjacent to each other. The minimum spacing of fuel and oxidizer lines shall be 24 inches in either a parallel or perpendicular direction.

NOTE

Clearance is required between cryogenic lines and carbon steel structures or supports. A minimum clearance of four inches is recommended. Where this is not possible, a Teflon, KEL-F or milamine spacer is required.

1-510. Types of hanger rods, straps, and supports for supporting tubing or piping from ceiling and side of structures are described in section IV.

1-511. All vertical hanger rods, straps, and supports shall be installed plumb.

1-512. All corrosive types of supporting brackets shall be completely painted prior to installation on plumbing or structures.

1-513. Use aluminum or iron U-type channels, Z-type angles, and L-type angles, and concrete raceways for routing piping.

NOTE

Sheet metal, wrap-around or clevis type supports shall not be used and sheet metal trays are not recommended for high-pressure piping systems.

1-514. The above types of channels or angles are to be permanently installed by bolting or welding to fixed structures, walls, pavement, piers, steel floor decking, and/or special designed supports.

1-515. All piping lines that can be damaged by working personnel using movable equipment (dollies, weld equipment, stands, and vehicles) shall utilize a type of channel or angle that protects the plumbing lines.

1-516. U-type channels shall be installed, if possible, with an incline or opening in the bottom of the channel to prevent trapping or accumulation of water, liquid propellants, and/or foreign matter.

1-517. Piping lines shall not be installed inside of conduit, large pipe, or tubing for protective supporting. Exception is the routing of lines under roadways, obstructions and sidewalks, and through fixed walls.

1-518. All channels and angles of ferrous material shall be completely painted with metal primer and color paint prior to installation of piping lines.

1-519. ALIGNMENT OF PIPING.

1-520. All ends of tubing, piping, fittings, and connectors, when being assembled, shall mate into proper alignment of matching or connecting surfaces.

1-521. Bending, forcing, or pulling to join piping ends together is not permitted. The use of coupling nuts, union joints, and flange bolts, to draw or pull the two joints together by force is not permitted.

1-522. CRYOGENIC PIPING.

1-523. The techniques used for fabricating and installing piping systems for liquefied gases are the same as those used for standard pressure systems, except in the case of vacuum insulated lines. In this case, extreme attention must be paid to cleanliness, cleanup, and leak tightness. All line sections shall be stored, transported, and erected with precautions taken to prevent damage to the jacket surface, flange, or liquid-carrying line. Nicks, dents, or scratches in any of the elements that are found up to and including the time of installation shall be investigated. If judged to be serious, they shall be considered grounds for rechecking the vacuum or for outright rejection. It is recommended that leak tightness be verified by means of a mass-spectrometer leak detector (paragraph 6-100). Vacuum-insulated transfer lines (figure 1-76) consist of two concentric metal lines separated by spacers made of a thermal-insulating substance. The space between the two lines is a high vacuum insulating area. The vacuum jacket is provided with a pressure relief valve which acts as a safety valve in case of an air leak or a cold gas or liquid leak from the cold inner line into the vacuum space. Foam insulated transfer lines (figure 1-77) are factory insulated except for the joints, which must be insulated during installation. The expansion joint coupling has two functions: it provides accessibility to the inner line joints and it acts as an expansion joint.

1-524. INSTALLATION OF TUBING.

1-525. Avoid straight line connections (figure 1-78) wherever possible, especially in short runs. Take care to eliminate stress from tubing lines. Support long tubing runs (paragraph 1-573). All parts installed on tubing, such as heavy fittings and valves, are to be bolted down to eliminate tubing fatigue.

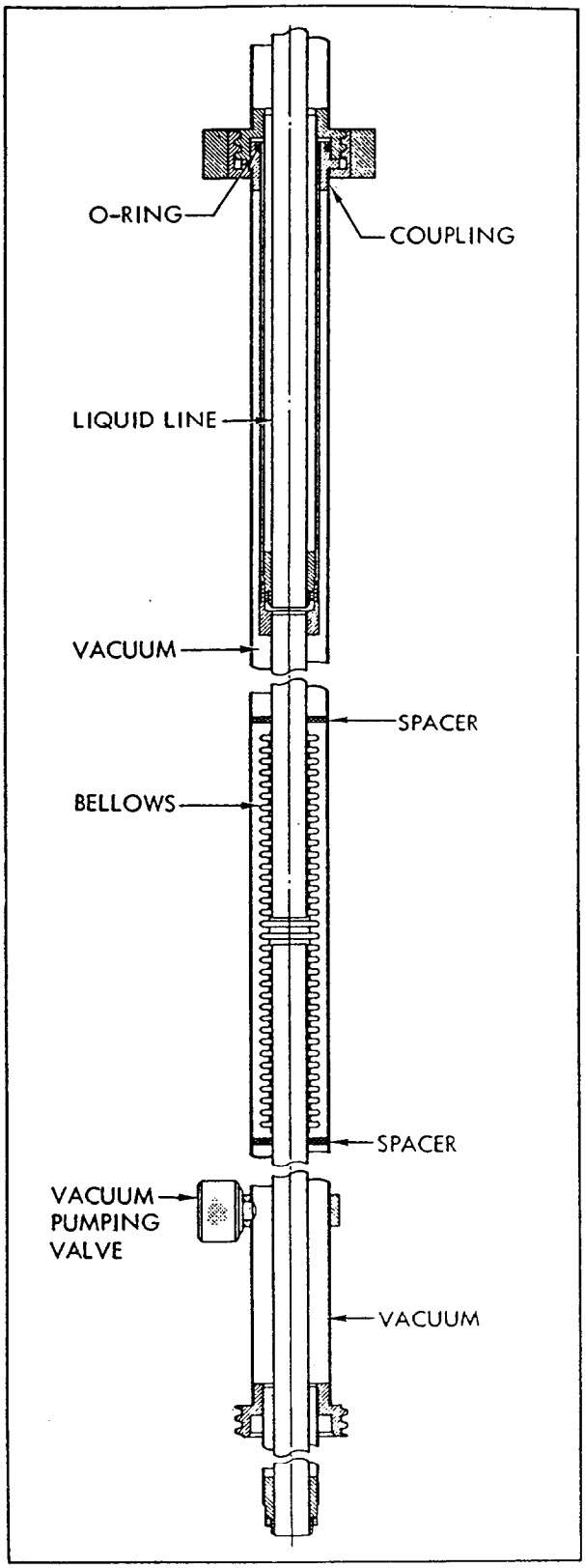

Figure 1-76. Vacuum Insulated Cryogenic Transfer Line

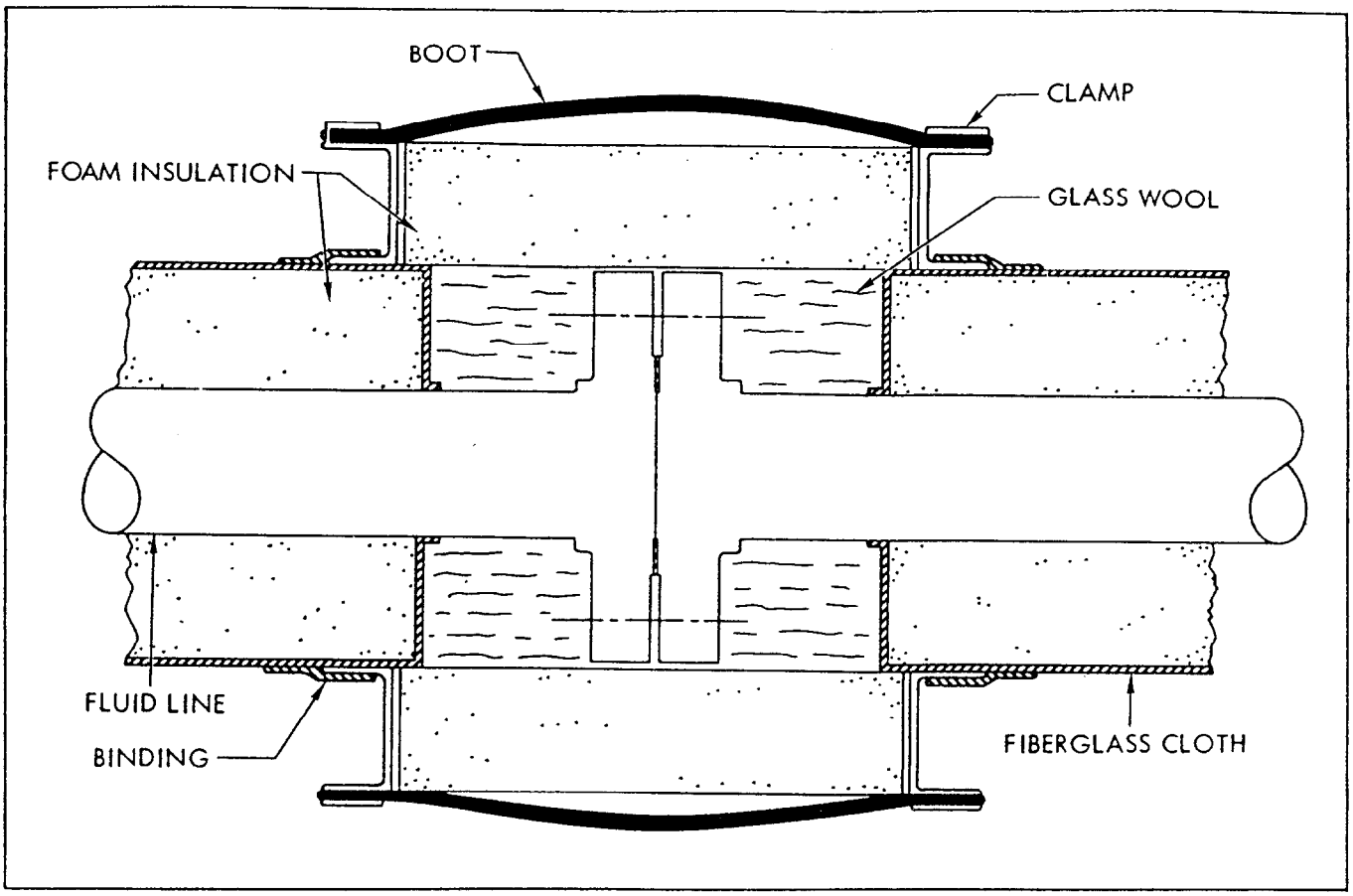

Figure 1-77. Foam Insulated Cryogenic Transfer Line

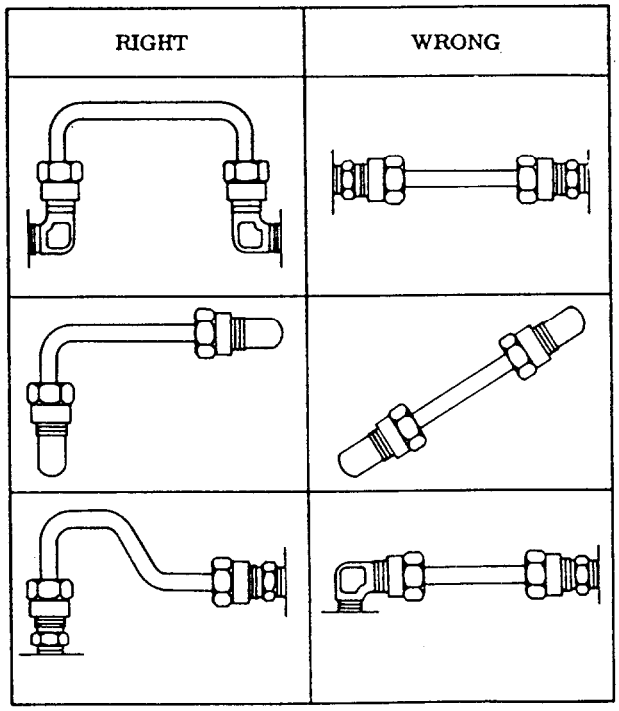

Figure 1-78. Installation of Tubing

1-526. Before installing tubing, inspect the tube to see that it conforms so the required specifications, is of the correct diameter and wall thickness, and is not out of round. A 6-inch section from each batch or length of the tubing shall be split longitudinally and inspected in daylight for the presence of green oxide. If green oxide is present on the inside of the tubing, the tubing shall not be used until oxide is removed. Install tubing as follows:

a. Prepare tube (paragraph 1-357).

b. Insert the longer leg of the tube into its fitting. Do not tighten nut at this time. Then insert other end into fitting and tighten both nuts. Torque fittings in accordance with Specification MIL-F-5509.

1-527. Type 303 stainless steel tubing is more susceptible to stress corrosion than the other 300 series stainless steels when subjected to high stress concentrations; therefore, frequent inspections should be made of highly stressed parts fabricated from type 3-3 tubing.

1-528. CONNECTIONS.

1-529. FLARED FITTINGS.

1-530. It is absolutely necessary that open ends of tubing and fittings be kept capped until they are connected into the system. If they are disconnected at any time, they must be capped at once. Expensive units can be permanently damaged by dirt and chips if this is not done.

1-531. the tubing shall be placed in position so that is not scratched during installation. Align tube ends so that the fittings meet squarely and fully. The nut shall never be used to draw the tube flare to the fitting, since the flare may be spun off or damaged.

1-532. Using fingers only, start the nut on the fitting and turn until the flare is firmly seated. A wrench should never be used until the nut is fingertight.

1-533. After the nut is firmly in place, a torque wrench shall be used to tighten to the proper torque value. Use a second wrench on the hex of the body to counteract the torque of the wrench on the nut.

1-534. If the fitting leaks, tighten nut to maximum torque. If it continues to leak, correct defects if possible. Replace if necessary.

1-535. Overtightening of the AN818 nuts may severely damage or completely cut off the tube flares and, also, may result in damage to the sleeve or nut of the fitting. If, upon removal of the nut and sleeve, the flare is found to retain less than 50 percent of the original wall thickness of the tube, it shall be rejected.

1-536. Undertightening may be equally serious, since this may allow the line to blow out or leak at the fitting. The use of torque wrenches prevents such incorrect torquing.

1-537. An AN818 nut should never be tightened when there is pressure in the lines, since this will tend to cut the flare without adding any appreciable torque to the fitting. If tightening properly, a tube fitting assembly may be removed and retorqued many times.

1-538. TAPERED PIPE THREAD CONNECTIONS.

1-539. the threaded portion of a pipe fitting is tapered so that, when it is tightened, the male threads are forced into the internal female thread parts, creating a seal. Since pipe threads are not machined for perfect fit, a combination antiseize and sealing compound should be used when pipe fittings are installed. The compound should be applied sparingly to the first three threads of the male fitting and should be applied perpendicular to the threads in order to ensure that the compound fills the threads to the root. Use extreme care in tightening pipe fittings with thread compound on them, since the compound makes it hard to feel the tightness of the connection. Over-tightening causes distortion, splitting, and leaks.

1-540. when teflon tape is utilized as a thread seal, it shall be applied to the male thread only, no closer than one thread from the end of the fitting. The tape shall be wrapped around the male threads with a slight overlap and stretched slightly so that the tape conforms to the shape of the threads. When the thread is fully engaged, some tape should emerge for identification.

1-541. DETAILS OF INSTALLATION.

1-542. Fittings with ends conforming to MS33656 (AN815 union; AN814 plug; AN893 reducer, bushing, etc.) shall be installed as indicated in figure 1-79.

1-543. Fittings with ends conforming to MS33657 (AN833 elbow, AN832 union,etc) but used in other than hydraulic or pneumatic systems shall be installed as indicated in figure 1-80.

1-544. Fittings with ends conforming to MS33657 (AN 833 elbow, etc) but used in hydraulic or pneumatic systems shall be installed as indicated in Figure 1-81.

1-545. Install fittings with MS33657 ends through bulkhead as indicated in figure 1-82.

1-546. Install rigid tube assemblies with flared ends as indicated in figure 1-83 and torque B-nuts as indicated in figure 1-84.

1-547. TORQUE VALUES.

1-548. Torque values furnished in figures 1-84 and 1-85 are based on the proper tensions in the parts for maximum strength and sealing

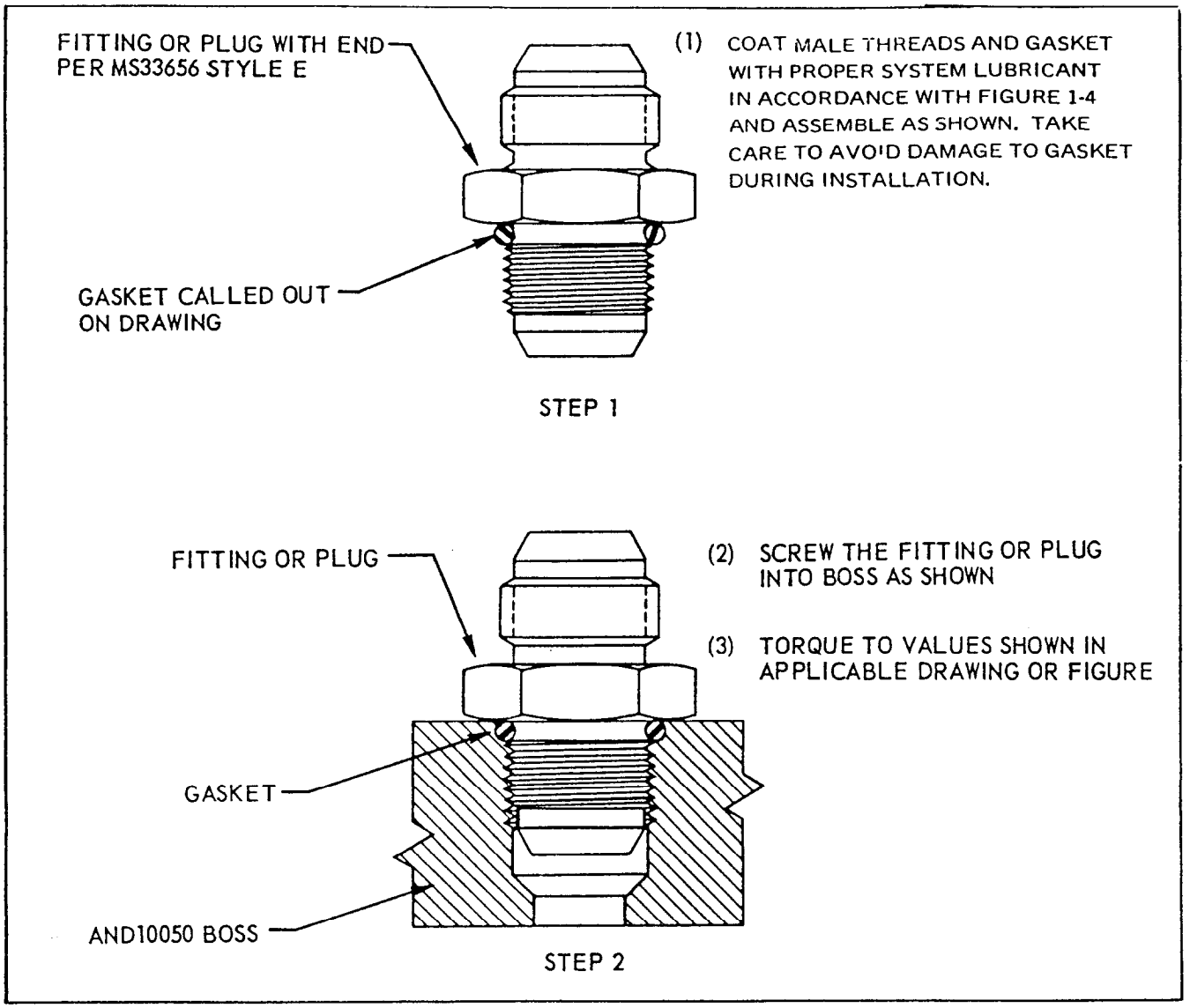

Figure 1-79. Installation of Fitting With MS33656 End Into AND10050 Boss

characteristics. For achieving proper tension by torque measurement, the parts must be clean and correctly lubricated or false torque readings will result.

1-549. Torque values for tubing fittings are to be applied with torque wrenches calibrated with the ranges specified for the tubing size and alloy so that maximum torque values shall not be exceeded. (Refer to Specification MIL-F-5509.)

1-550. At assembly, torque values as specified are to be applied smoothly. Fittings shall then be backed off approximately 1/4-turn and retorqued.

1-551. If erratic torque wrench indications are found, remove tubing assembly and check for evidence of galling.

1-552. FLARELESS FITTINGS.

NOTE

Flareless fittings shall not be used in systems above 3,000 psi normal operating pressure.

1-553. When installing a tube assembly into the system, the tube centerline should be in line with the centerline of the connector and should not be forced into position. If the tube assembly is misaligned it becomes prestressed after installation and may leak or fail during operation of the system. With the end of the tube assembly positioned in the connector, the barrel of the sleeve should be in contact with the seat of the connector. If contact is not made, the end of the tubing may be filed down suffi-

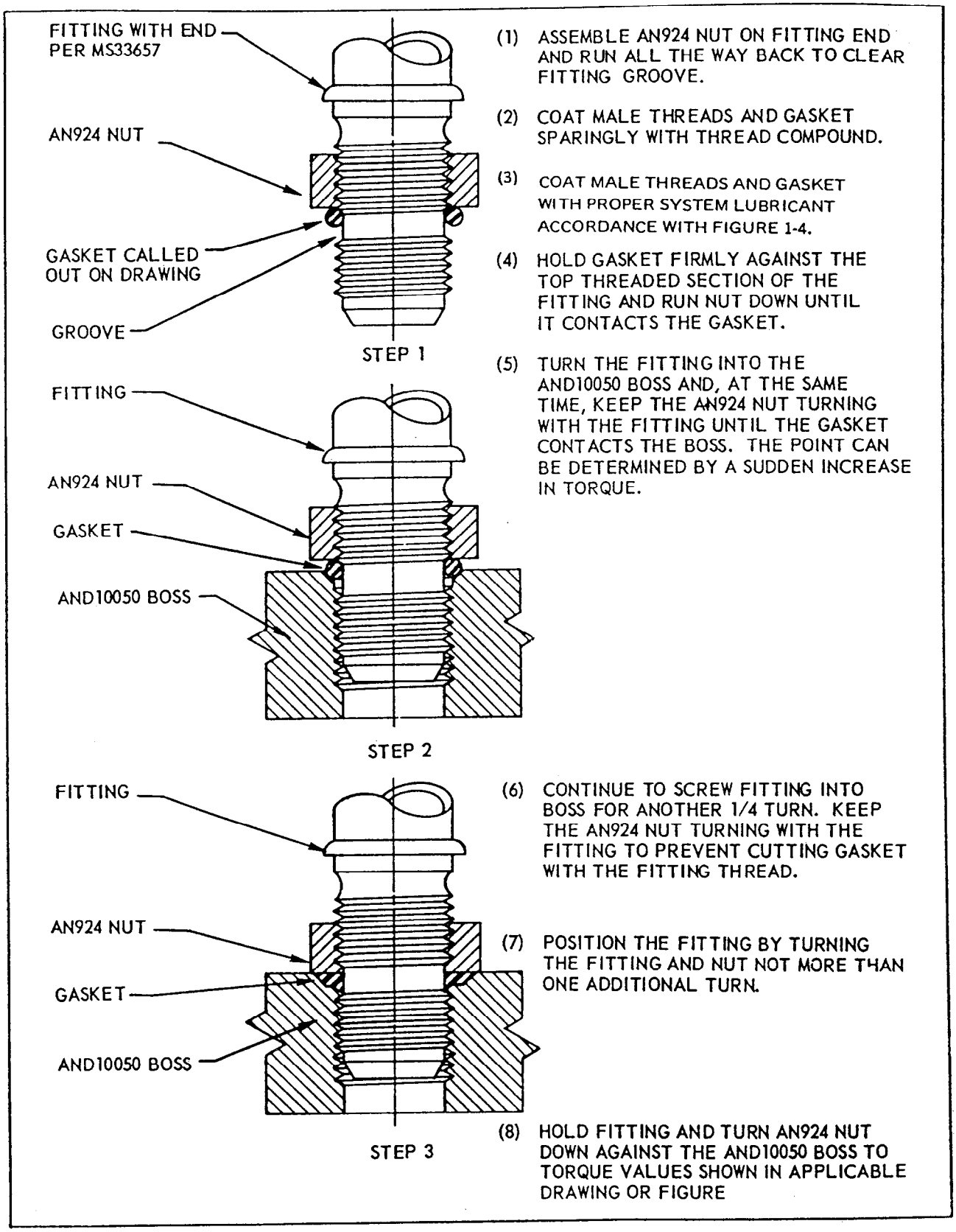

Figure 1-80. Installation of Fitting With MS33657 End Into AND10050 Boss (Except Hydraulic and Pneumatic)

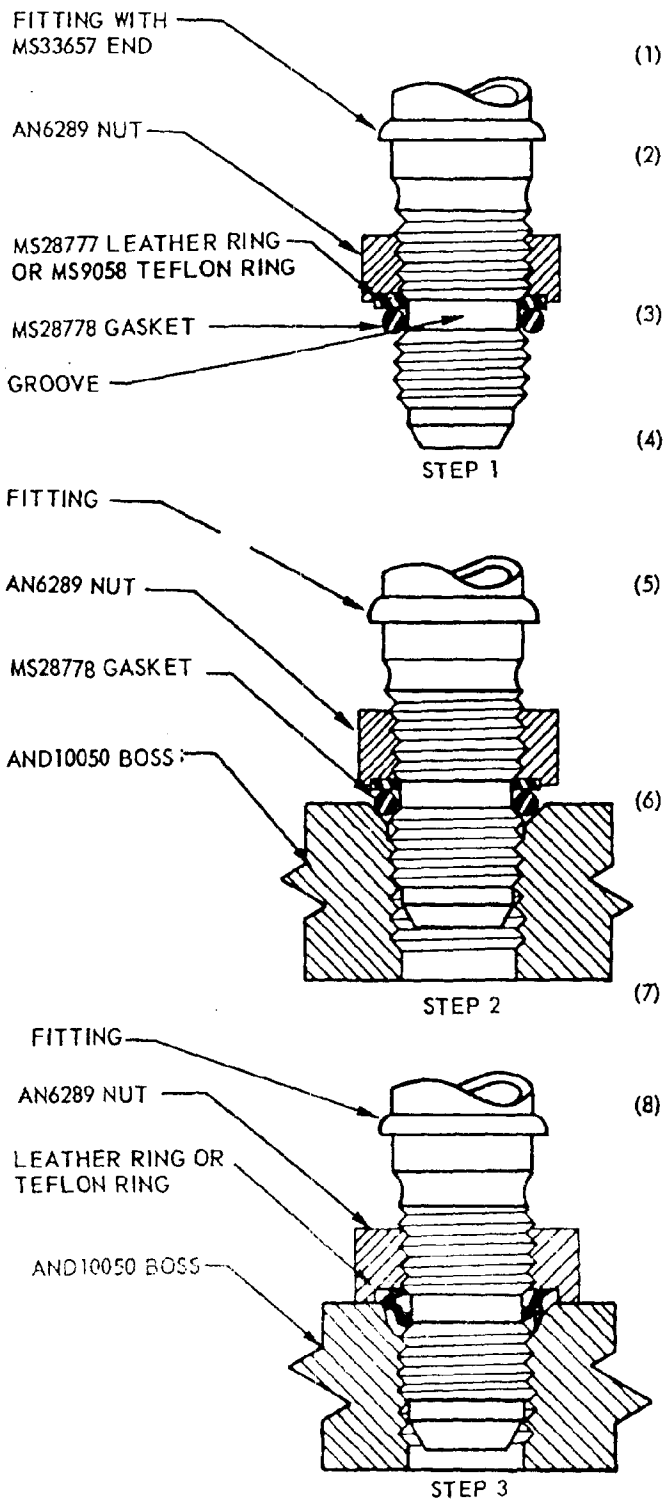

(1) COAT MALE THREADS, LEATHER OR TEFLON RING, AND GASKET WITH PROPER SYSTEM LUBRICANT IN ACCORDANCE WITH FIGURE 1-4.

(2) ASSEMBLE CAREFULLY TO AVOID DAMAGE TO RINGS IN STEP 1. IF LEATHER RING IS USED, HAVE THE SMOOTH (HAIR SIDE) AGAINST THE GASKET.

(3) WORK LEATHER OR TEFLON RING INTO COUNTERBORE OF NUT

(4) TURN NUT DOWN UNTIL GASKET IS PUSHED FIRMLY AGAINST LOWER THREADED SECTION OF FITTING.

(5) INSTALL FITTING INTO THE AND10050 BOSS, KEEP AN6289 NUT TURNING WITH THE FITTING UNTIL GASKET CONTACTS BOSS IN STEP 2. (THIS POINT CAN BE DETERMINED BY A SUDDEN INCREASE IN TORQUE.)

(6) WITH FITTING IN THIS POSITION, PUT A WRENCH ON THE AN6289 NUT TO HOLD IT FROM TURNING, AND, AT THE SAME TIME, TURN FITTING IN 1-1/2 TURNS.

(7) POSITION FITTING BY TURNING IN NOT MORE THAN ONE ADDITIONAL TURN.

(8) HOLD FITTING AND TURN AN6289 NUT WITH A TORQUE WRENCH AGAINST AND10050 BOSS, AS SHOWN IN STEP 3, TO TORQUE VALUES SHOWN IN APPLICABLE DRAWING OR FIGURE (SLIGHT EXTRUSION OF THE LEATHER OR TEFLON RING IS NOT DETRIMENTAL AT THE INTIAL INSTALLATION, BUT THEY SHALL NOT BE REUSED AT ANY REINSTALLATION OF THE FITTING IN THE BOSS.)

Figure 1-81. Installation of Hydraulic and Pneumatic Fittings With MS33657 Fitting End Into AND10050 Boss

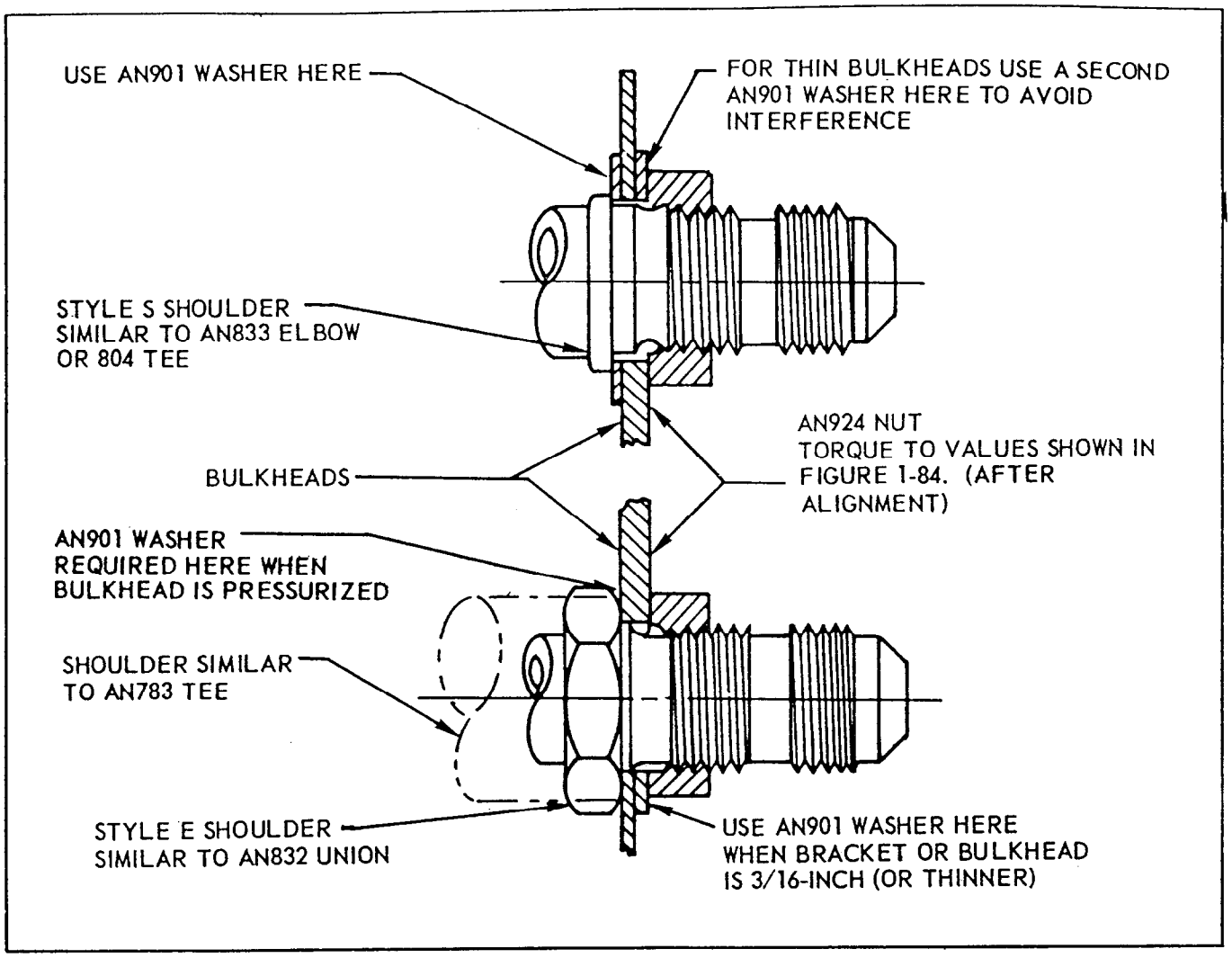

Figure 1-82. Installation of Fittings With MS33657 Ends Through Bulkheads or Brackets

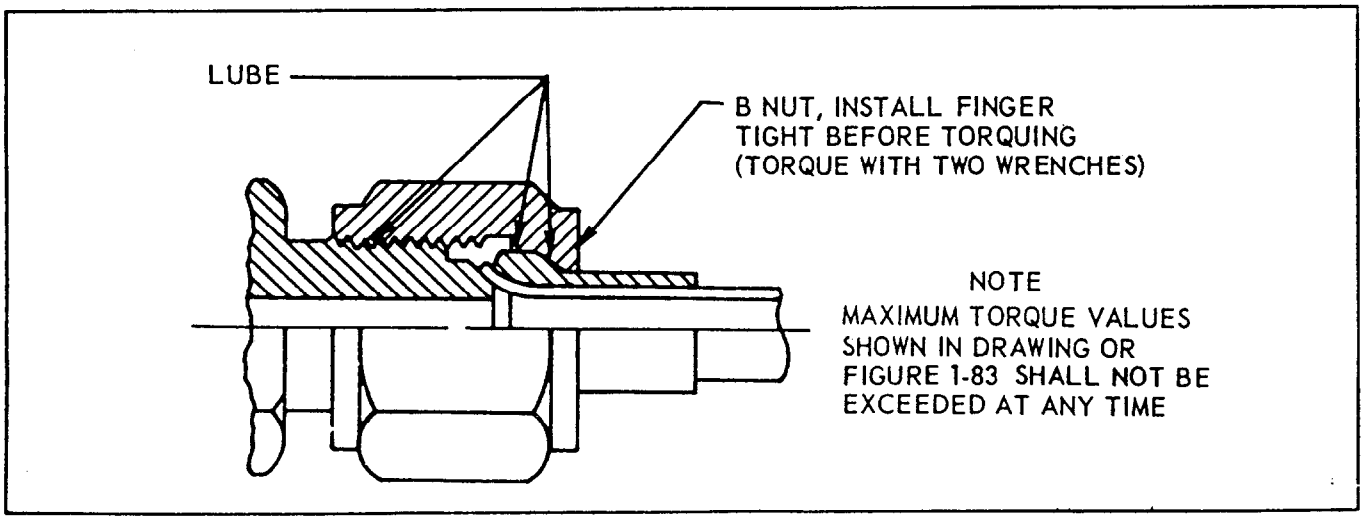

Figure 1-83. Assembly of Flared Tube to Fitting

NOMINAL TUBE OD (INCHES)	TORQUE IN INCH-POUNDS*					
	6061-0 AND 5052-0 ALUMINUM ALLOY TUBING COPPER TUBING		6061-T6 ALUMINUM ALLOY TUBING		Specification MIL-T-6845 STAINLESS (CRES) STEEL TUBING	
	MIN	MAX	MIN	MAX	MIN	MAX
1/8	20	25	---	---	35	40
3/16	25	35	30	70	90	140
1/4	40	65	70	120	135	185
5/16	60	80	70	120	180	230
3/8	75	125	130	180	270	345
1/2	150	250	300	400	450	525
5/8	200	350	430	550	650	750
3/4	300	500	650	800	900	1,100
1	500	700	900	1,100	1,200	1,400
1 1/4	600	900	1,200	1,450	1,500	1,800
1 1/2	600	900	1,550	1,850	2,000	2,300
1 3/4	700	1,000	2,000	2,300	2,600	2,900
2	800	1,100	2,500	2,900	3,200	3,600

* For combinations of materials, use the lower torque value of the applicable materials.

Figure 1-84. Recommended Torque Values for Flared and Flex Tubing B-Nuts

NOMINAL TUBE OD (INCHES)	FITTING THREAD SIZE	TORQUE IN INCH-POUNDS									
		FOR GASKETED ALUMINUM OR STEEL FITTINGS*						FOR JAMNUTS AND FITTINGS WITHOUT GASKETS**			
		AN924 NUT AN815 UNION		AN814 PLUG		AN6289 NUT		ALUMINUM		STEEL	
		MIN	MAX	MIN	MAX	MIN	MAX	MIN	MAX	MIN	MAX
1/8	5/16-24	25	35	10	16	25	35	35	50	---	---
3/16	3/8-24	50	75	30	40	50	75	65	80	70	90
1/4	7/16-20	55	80	40	65	75	100	90	105	110	130
5/16	1/2-20	75	100	60	80	90	120	105	125	140	160
3/8	9/16-18	100	150	80	120	150	200	125	145	225	275
1/2	3/4-16	180	230	150	200	200	250	240	280	400	450
5/8	7/8-14	250	350	200	350	275	400	330	370	550	650
3/4	1 1/16-12	420	600	300	500	450	650	540	660	800	960
1	1 5/16-12	600	840	450	600	650	900	840	960	1,000	1,200
1 1/4	1 5/8-12	720	960	600	720	800	1,000	960	1,200	---	---
1 1/2	1 7/8-12	840	1,080	600	800	900	1,100	1,200	1,400	---	---

* For use with O-rings and aluminum, asbestos, leather, teflon, gaskets or washers.

**For combinations of materials (either jamnut, fittings, or boss), use the lowest applicable values shown.

Figure 1-85. Recommended Torque Values for Fittings

ciently to permit contact with the sleeve and the seat of the connector.

1-554. Tighten the nut until a sharp rise in torque is noted. From that point apply 1/6-turn to 1/3-turn (from one to two hex flats).

CAUTION

Never tighten a leaking flareless fitting. Remove fitting and inspect for undertightening, over-tightening, presence of foreign matter, or defective parts; then retighten in accordance with installation procedures.

1-555. TORQUING OF FLARELESS FITTINGS.

1-556. Tightening by the displacement method is specified for MS flareless fittings. The nut shall be run down tight, using fingers if possible. Where a wrench is used, care must be exercised to note the first signs of nut bottoming. The final tightening must commence at the point where the nut just begins to bottom and a sharp rise in torque is noted. Using a wrench, the nut shall be tightened 1/6-turn to 1/3-turn (from one to two hex flats).

1-557. SUPERPRESSURE FITTINGS.

1-558. Supplier-furnished tools (paragraph A-28) shall be used to prepare the tube end for fitting into the various size valves and fittings (1/4 - 9/16-inch size). Preparation of the tubing consists of coning and threading operations.

1-559. Cone superpressure tubing as follows:

CAUTION

Care should be taken to avoid nicking or scratching the tubing during coning and threading operations. The pressure rating of the tubing may be greatly affected if tubing is nicked or scratched.

a. Clamp tubing in a smooth-jaw machinist's vise, with soft material or wood over jaws.

b. Unscrew clamping ring of forming tool (figure 1-86) to rear position.

c. Slide forming tool over tubing until tubing end butts against cutting edge.

d. Tighten setscrew to hold forming tool firmly on tubing.

e. Lubricate tubing -cutting edge junction.

NOTE

Cutting edge should be lubricated freely and frequently with an approved sulphur-base cutting oil during coning operation.

f. Rotate crank at approximately one turn per second while rotating feed handle clockwise until tubing has attained the required cone tip diameter (figure 1-88).

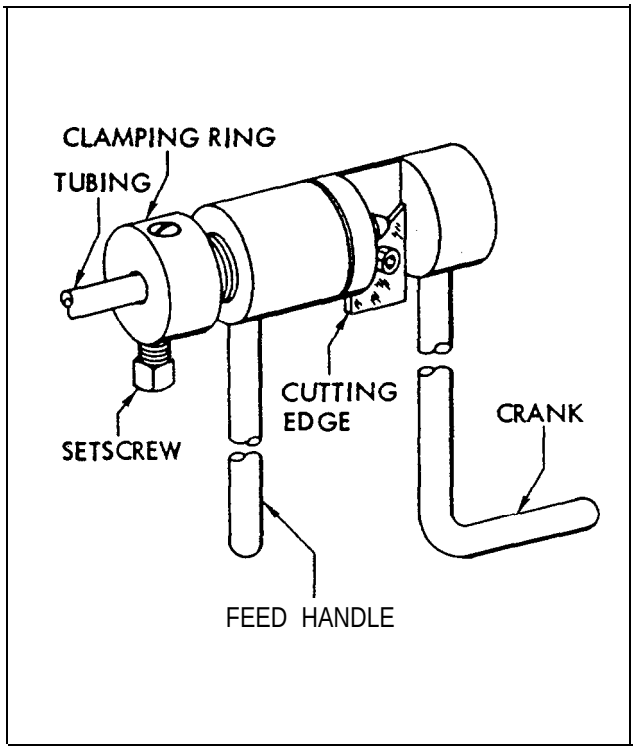

Figure 1-86. Forming Tool for Superpressure Tubing

NOTE

Cutting edge will last longer when a uniform, light feed, just heavy enough to keep the cutting edge cutting continuously, is employed. If too light a cut is taken, surface will work-harden and make a smooth cut difficult; too heavy a cut may break the cutting edge.

g. Hold feed handle still at end of cut and make several turns with crank to ensure smooth finish on cone.

h. Loosen setscrew and remove forming tool from tubing.

1-560. Assemble threading tool (figure 1-88) as follows:

a. Select proper size tubing guide bushing for tubing to be threaded, and insert it into threading tool, aligning curved slot with retaining screw hole.

b. Secure tubing guide bushing with bushing retaining screw.

c. Partially unscrew three die retaining screws, and insert appropriate button die, adjusted for two-thirds of required thread depth.

NOTE

The surface on which the thread size is marked shall face the guide bushing end of the threading tool.

d. Align button die until two conical recesses and slot of die line up with three die retaining screws.

e. Tighten die retaining screws.

1-561. Thread superpressure tubing as follows:

a. Slide threading tool (guide bushing end first) over rigidly held coned tubing.

b. Lubricate tubing and die freely with an approved sulphur-base cutting oil.

C. Rotate threading tool counterclockwise approximately 1-1/2 to 2 revolutions; back off 30 degrees, and lubricate freely. Continue this procedure until required length of thread (figure 1-87) is attained.

d. Rotate threading tool clockwise until die disengages from tubing, and remove tool from tubing.

e. Remove button die from threading tool and adjust for full thread depth, or replace with different die set for full thread depth.

f. Install button die in threading tool and repeat steps a through d.

1-562. FLANGED FITTINGS.

1-563. Flange faces of flanged piping and fitting shall be clean and fitted with closures until installed to prevent damage to the face or contamination of the rest of the system.

OD AND ID OF TUBING (INCH)	LEFT-HAND THREAD	LENGTHOFTHREAD (TIP OF CONE TO END OF THREAD) (INCH)	DIAMETER OF CONE TIP (INCH)
1/4 x 1/16	1/4-28	9/16	1/8
1/4 x 3/32	1/4- 28	9/16	1/8
3/8 x 1/8	3/8-24	3/4	7/32
9/16 x 3/16	9/16-18	15/16	9/32
9/16 x 5/16	9/16-18	15/16	11/32

Figure 1-87. Superpressure Tubing Threads

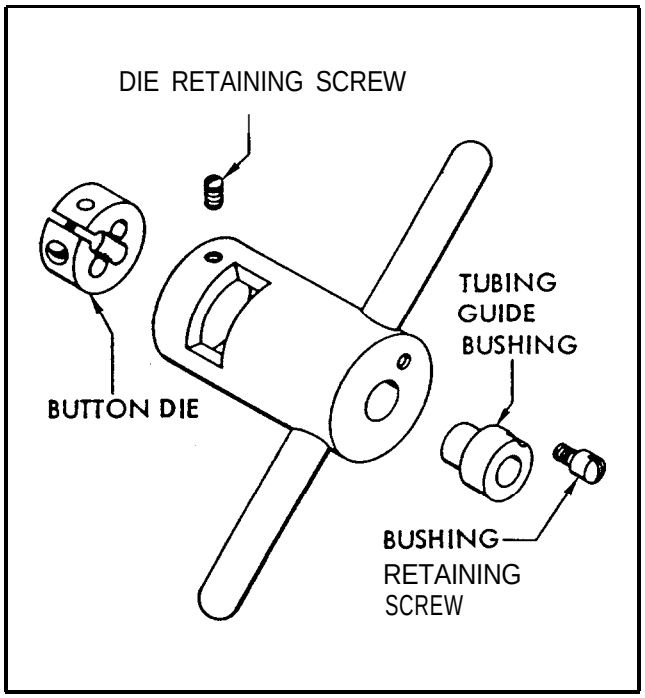

Figure 1-88. Threading Tool for Superpressure Tubing

1-564. Care should be taken to center the gasket. Normally, gaskets shall not be lubricated. If sealing is a problem, gasket seals may be coated on both sides with the approved sealing compound and the surfaces shall be thoroughly wiped off.

WARNING

Do not tighten bolts while system is under pressure.

1-565. Bolts shall be tightened first by hand. Tighten two bolts 180 degrees apart, advance clockwise 90 degrees, and repeat the process until all the bolts are uniformly stressed.

1-566. The amount of bolt stress applied to the bolts should be low at the start of the process to prevent cocking of the flange faces. In flanges operating at extreme temperatures, it is generally necessary to retighten bolts to compensate for relaxation or shrinkage, depending on high or low temperatures.

1-567. GASKET COMPRESSION.

1-568. Theoretically, for effecting a good seal, the unit gasket pressure at all points need only be slightly in excess of the internal unit pressure. Practically, the unit gasket pressure must be several times the internal unit pressure to compensate for surface imperfections. As a general rule, a net unit gasket compression of two to three times the internal fluid pressure will prevent leakage across the joint surfaces.

1-569. TORQUE VALUES FOR FLANGE BOLTS.

1-570. Each of the component parts of a flanged joint assembly are subject to tensile or compressive stresses of varying magnitude. Where extremes in temperature are involved, a change of magnitude of stresses occurs and a lowering of the bolt stress may result.

1-571. The initial bolt stresses to be applied in the assembly of a flanged joint should afford a reasonable factor of safety (with reference to the yield point of the bolting material). Also the initial bolt stress must be high enough to ensure a tight joint.

1-572. The technique of stressing bolts by various methods is described in section IV (paragraph 1-456). Stressing according to these methods should provide satisfactory joints with American Standard steel flanges.

1-573. ANCHORS, HANGERS, AND SUPPORTS.

1-574. The details of fabrication of anchors, hangers, and supports are covered in detail in section IV (paragraph 1-396). Various methods of installation are illustrated in figure 1-89.

1-575. Assemblies, such as valves, regulators, filters accumulators, manifolds, etc, will require individual supports. Supports may consist of mounting plates, support rods, brackets, and special designed piers. The use of plumbing lines for carrying and supporting the assembly is not permitted. Supports of assemblies will be installed in a manner to prevent any stress or weight from being transmitted to the plumbing line system.

1-576. Proper installation of supports of assemblies will facilitate quick removal and reinstalling of the assembly or line with a minimum **amount of realinement.**

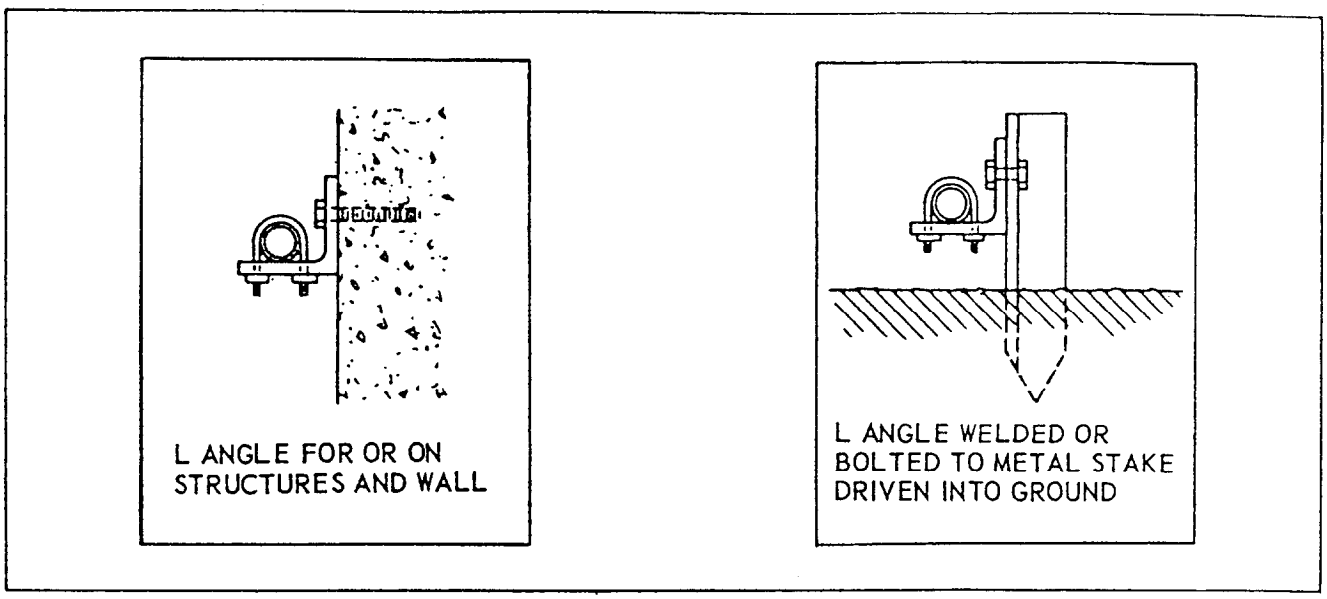

Figure 1-89. Methods of Installation of System Supports

1-577. SPACING OF SUPPORTS--STANDARD TUBING.

1-578. Figure 1-90 lists the recommended maximum distances for support and anchors for systems fabricated of standard tubing and AN or MS fittings.

1-579. The recommended spacing of supports is shown in figure 1-90. Where there are tube fittings, such as unions, tees, etc, spacing should be reduced approximately 20 percent. Where tubes of different diameters are connected together, an average spacing distance may be used. If grouping of tubing is necessary, they should be supported by suitable multi-block type clamps. In order to facilitate inspection and repair of individual tubes, they should not be bundled together. Supports should be placed as close to bends as possible to minimize overhang of the tube.

1-580. All tubing shall be anchored at each end of the connection within 12 inches of the B-nut.

1-581. Tubing with shorter lengths than stated and maximum spacing of supports will only require anchoring at each end of the connection within 12 inches of the B-nut.

1-582. SPACING OF SUPPORTS--SUPERPRESSURE TUBING.

1-583. Figure 1-91 lists the recommended maximum distances for supports and anchors for systems fabricated of superpressure tubing and fittings.

1-584. Tubing with connections for extended runs shall be anchored or supported at each end of the connection within 12 inches of the end.

1-585. Tubing having shorter lengths than stated in the maximum spacing of supports or anchors column shall require only one anchor preferably located in the middle of the length.

1-586. Interlocking split-block type clamps are recommended for use on superpressure system installations. Clip-type clamps are not satisfactory and shall not be used.

1-587. SPACING OF SUPPORTS- FLANGED OR THREADED PIPE.

1-588. Figure 1-92 lists the maximum distances for supports and anchors for systems fabricated of flanged or threaded piping and fittings.

1-589. SYSTEM FLEXIBILITY.

1-590. High-pressure systems shall be installed with sufficient flexibility to prevent thermal expansion or contraction from causing excessive stresses in the system material, excessive bending

NOMINAL TUBE OD (MINIMUM WALL THICKNESS)	MAXIMUM SPAN (FEET AT 100°F (38°C))		
	STAINLESS AND CARBON STEEL	ALUMINUM ALLOY	COPPER
1/8-3/8	4	4	3
1/2-7/8	6	5	4
1-2	9	7	5

Figure 1-90. Spacing of Standard Tubing Supports

TUBE OD	TYPE	MAXIMUM WORKING PRESSURE (PSIG)	MAXIMUM SPACING OF SUPPORTS OR ANCHORS (FEET)
1/4 through 9/16	Gaseous	6,000-10,000	4
1/4 through 9/16	Gaseous	Above 10,000	3
1/4 through 9/16	Hydraulic	6,000-30,000	4

Figure 1-91. Spacing of Superpressure Tubing Supports

NOMINAL PIPE SIZE (INCHES)	MAXIMUM SPAN (FEET AT 100°F (38°C))		
	STAINLESS AND CARBON STEEL	ALUMINUM ALLOYS	COPPER
1	8	8	5
1 1/2	9	9	6
2	10	10	6
2 1/2	12	11	7
3	13	12	8
3 1/2	14	13	8
4	15	14	9
5	16	15	10
6	18	16	10
8	19	17	11
10	22	18	13
12	23	20	14

Figure 1-92. Support Spacing for Standard Weight Pipe Filled With Fluid at 62.4 Pounds Per Cubic Foot

moments at joints, or undesirable forces or moments at points of connection to equipment or at anchorage or guide points.

1-591. Flexibility shall be provided by changes of direction or by the use of bends, loops, and offsets, or provision shall be made to absorb thermal changes by expansion joints of the slip-joint or corrugated type.

1-592. The flexibility analysis requirements are specified in section VI of the ASA code for Pressure Piping. It can be complicated and is best left to a competent piping system designer. For those desiring to go further into the subject, an analysis is made in Special Report 102, A.D. Little Company, Basic Procedures for Design of Pipelines and Pipeline Supports for Propellant-Loading System Complex 65-2-WS107A-1.

1-593. High-pressure systems shall be supported as designed or specified in a thoroughly substantial and workmanlike manner, rigid enough to prevent excessive vibration, and anchored sufficiently to prevent undue strains.

1-594. Hangers and supports shall be so installed as not to interfere with the free expansion and contraction of the system between anchors. Suitable spring hangers, sway-bracing vibration dampers, etc., shall be provided where necessary.

1-595. Straight runs of lines between two fixed anchor points shall not be permitted unless expansion joints are provided to compensate for thermal expansion.

1-596. SYSTEM IDENTIFICATION.

1-597. GENERAL.

NOTE

All missile, missile support systems and missile AGE shall be marked in accordance with MIL-STD-1247. All RPIE and Industrial equipment shall be marked in accordance with MIL-STD-101.

1-598. All high-pressure fluid systems shall be identified as to function, content, applicable hazard, and, if applicable, direction of flow, except for the following:

a. Piping systems containing water determined as suitable for human consumption, and installed for this purpose, shall be painted white.

b. There is no requirement to mark rubber hoses, temporary lines, or umbilical cables.

c. Marking of lines requiring metal tags does not normally apply to airborne systems. Tapes or decals, as applicable, will be used for airborne lines, except that small tags of some lightweight noncorrosive metal such as aluminum alloy, stamped with contents, pressure, and direction of flow, may be used on airborne lines where temperature extreme or oily environment makes use of tapes and decals infeasible.

1-599. IDENTIFICATION OF FUNCTIONS. Function shall be identified by the use of words, colors, and symbols, except that symbols need not to be used where identification is accomplished with paints and tags, and neither colors nor symbols are required on aluminum alloy tags.

1-600. IDENTIFICATION OF HAZARDS. The primary hazard associated with the contents of any line shall be identified in black letters on a white background. Where such hazard results from working pressure only, and where the pressure is indicated in the identification of contents, no further identification of hazard is necessary. Where secondary hazards exist, or under conditions warranting special care over and above that required for the identified hazard, the skull and cross-bones symbol may be used. The words and abbreviations in figure 1-93 are to be used to identify specific classes of hazards. A selected list of hazards associated with common line contents are shown in figure 1-94.

1-601. IDENTIFICATION OF DIRECTION OF FLOW. When required, a direction of flow arrow, as shown in figure 1-95, shall be used to indicate the direction in which the contents of the line are flowing. A two-head-arrow shall be used to indicate reversible flow. The arrow shall be black on a white background except when stamped on aluminum alloy tags. Arrow heads shall comprise one-third of the total length, maximum. Width of arrow stems shall be one-third of the width of the head, maximum.

CLASS OF HAZARD	IDENTIFICATION MARKING
FLAMMABLE MATERIALS. All materials known ordinarily as flammables or combustibles.	FLAM
TOXIC AND POISONOUS MATERIALS. All materials extremely hazardous to life or health, under normal conditions, as toxics or poisons.	TOXIC
ANESTHETICS AND HARMFUL MATERIALS. All materials productive of anesthetic vapors and all liquid chemicals and compounds hazardous to life and property but not normally productive of dangerous quantities of fumes or vapors.	AAHM
PHYSICALLY DANGEROUS MATERIALS. All materials, not dangerous in themselves, which are as asphyxiating in confined areas or which are generally handle in a dangerous physical state of pressure or temperature.	PHDAN
OXIDIZING MATERIALS. All materials which readily furnish oxygen for combustion and fire producers which react explosively or with the evolution of heat in contact with many other materials.	OXYM
FIRE PROTECTION MATERIALS. All materials provided in piping systems or in compressed-gas cylinders exclusively for use in fire protection.	FPM

Figure 1-93. Class of Hazard Identification Markings

1-602. IDENTIFICATION METHODS.

1-603. TAPES. Tape conforming to Specification MIL-T-9906 and which completely encircles the line shall be used to identify the function of all lines less than four inches in diameter, except cold lines, lines exposed to excessive heat (above 385°F), and lines in engine compartments where there is a possibility of the tape being drawn into the engine intake. Tape ends shall not be overlapped as the adhesive will not stick to the face of the tape. Ends of the tape shall be butt fit or the ends may be turned up and an adhesive tab formed.

1-604. Colors used for color-coding of tapes shall conform to FED-STD-595 (figure 1-96). Color-coding shall be based upon line function, as indicated in figure 1-97. Where more than one color is required to identify a single function, the order of colors is from left to right.

1-605. Geometric symbols (figure 1-97) used on tapes shall be printed on tapes to denote line functions. These symbols shall appear in a repeated pattern, as indicated in figure 1-95 for the entire length of the tape. Symbols shall appear on the right-hand side of tapes and shall comprise one-fourth of the total tape width.

1-606. Lettering used on tapes shall be 3/32-inch high, and shall be printed in black on the color-coded area as shown in figure 1-95. There shall be a 1/32-inch vertical space between words when more than one written line is required for one complete statement of function. The statement of function shall recur at 1/4-inch intervals throughout the length of the tape.

1-607. Tapes shall be a minimum of one inch in width. Three-fourths of the total width (left-hand side) shall be colored, and one-fourth of the total width (right-hand side) shall be reserved for geometric symbols. Where more than one color is required ***on*** a single tape, the color coding area shall be divided into equal vertical stripes of the required colors.

1-608. Tapes shall be placed on both ends of a line. Identifications within a group shall be approximately one inch apart. Additional placement will be as necessary to ensure that one complete identification is visible from any observation point along the line. One group shall

CONTENTS	IDENTIFICATION MARKING
Air (under pressure)	PHDAN
Alcohol	FLAM
Ammonia	TOXIC
Carbon dioxide	PHDAN or FPM
Ethylene oxide	FLAM
Fluorine	TOXIC
Foam	PHDAN
Freon	PHDAN
Gaseous oxygen	OXYM
Helium	PHDAN
Hydrazine	TOXIC
Hydrazine/UDMH	TOXIC
Hydrogen	FLAM
Hydrogen peroxide	OXYM
Liquid hydrogen	FLAM
Liquid nitrogen	PHDAN
Liquid oxygen	PHDAN or OXYM
LPG (liquid petroleum gas)	FLAM
Methylene chloride	AAHM
Natural gas	FLAM
Nitrogen gas	PHDAN
Nitrogen tetroxide	TOXIC
Nitrogen tetroxide (gaseous)	TOXIC
Oils and greases	FLAM
Red fuming nitric acid	TOXIC
RP-1	FLAM
Trichloroethylene	AAHM

Figure 1-94. Identification Markings Associated with Various Contents (Sheet 1 of 2)

CONTENTS	IDENTIFICATION MARKING
UDMH	TOXIC
Aniline, furfuryl alcohol-hydrazine mix	TOXIC
Aniline furfuryl alcohol mix	TOXIC
Ethyl alcohol-methyl alcohol mix	FLAM
N-Propyl nitrate	FLAM
Chlorine trifluoride	TOXIC
JP-4	FLAM
Sodium bicarbonate sol.	PHDAN
Perchloryl fluoride	TOXIC
Alkyl boranes	TOXIC
Anhydrous ammonia	TOXIC
Bromine pentafluoride	TOXIC
Monomethylhydrazine	TOXIC

Figure 1-94. Identification Markings Associated with Various Contents (Sheet 2 of 2)

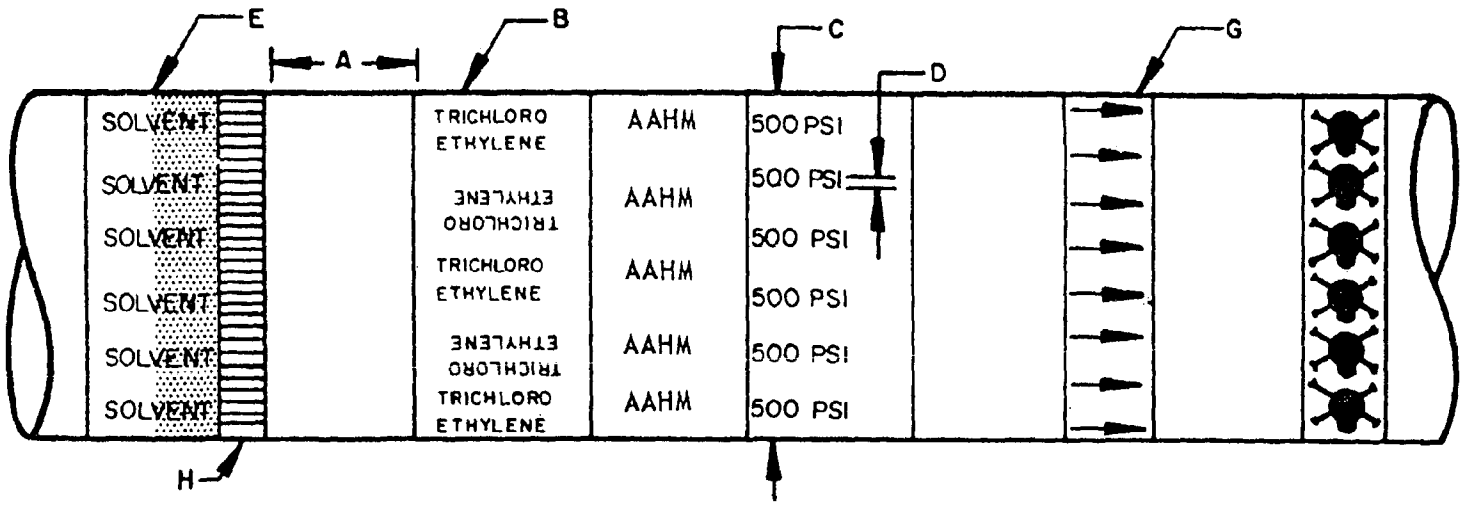

IDENTIFICATION TAPE INSTALLATION DETAIL

A. TAPE TO BE PLACED 1 INCH + 1/8 INCH APART.

B. PRINTING ON TAPE MAY HAVE EVERY OTHER WORD PATTERN UPSIDE DOWN. THIS IS NOT MANDATORY.

C. TAPE SHALL COMPLETELY CIRCUMSCRIBE THE PIPE WITH ITS EDGE IN A PLANE PERPENDICULAR TO PIPE AXIS.

D. LETTERING SHALL BE APPROXIMATELY .3/32 INCH MINIMUM, 1/8 INCH MAXIMUM.

E. TAPE FOR SOLVENT IS COLOR CODED BLUE-BROWN.

F. WHEN DIRECTION OF FLOW IS OPPOSITE THAT INDICATED ON THE ABOVE FIGURE, THE ENTIRE PATTERN OF TAPES SHALL BE REVERSED.

G. DOUBLE HEADED ARROWS MAY BE USED TO INDICATE FLOW IN EITHER DIRECTION.

H. GEOMETRIC SYMBOLS USED TO DENOTE FUNCTION.

Figure 1-95. Identification Tape Installation

be placed immediately adjacent to all operating accessories such as valves, regulators, flow-checks, strainers, clean-outs, etc.

1-609. DECALS. Decals conforming to Specification MIL-D-8635, Type II, shall be used to identify contents, hazards, and direction of flow on all lines where tapes are used to identify function. Decals shall not be used where temperature exceeds 150°F.

1-610. When function is identified by tape, the direction of flow arrow will appear on decals that completely circumscribe the line. Arrows shall be printed in a recurring pattern at 1/4-inch intervals. Decals shall be 1/2-inch wide minimum, and the arrow shall extend to within 1/32-inch of each edge. Height of arrow heads shall be 3/32-inch maximum.

1-611. Location of decals is the same as tapes. (See paragraph 1-608.)

1-612. TAGS. With the exception of airborne equipment, stainless steel lines four inches and larger in size, lines exposed to excessive heat (above 325°F), all cold lines and lines in an oily environment shall be identified by securely attaching a metal tag to the line. The tag shall be clearly painted on both sides with the specific name of the function and contents, the pressure, if applicable, and arrow indicating the direction of flow, if applicable, colors denoting function, and words to indicate any hazard present. No geometric symbols need be painted on tags. Tags shall use the same color scheme as those employed on tapes, except as noted in paragraph 1-598. Also, colors are applied to each end of the tag as shown in figure 1-98, and color-coding shall appear on both sides of tags. Letters shall be black on a white background.

1-613. Identification tags shall be three (±1/2) inches by six (±3/16) inches for lines less than four inches in diameter, and six (±3/8) inches by 12 (±3/8) inches for lines four inches and larger in diameter. Color coding area shall be 1/2 (±1/16)-inch wide. Letters shall be 1/2-inch high for lines less than four inches in diameter, and one inch high for lines four inches and larger in diameter. Direction of flow arrow shall be one-half the length of the area between mounting straps. Stems shall be 3/8-inch maximum on 12-inch tags.

1-614. Tags shall be located adjacent to all operating accessories described in paragraph 1-608, but not so near as to obstruct operations. In addition. tags shall be located adjacent to the junction with branch lines, or used where lines pass through walls or floors. In long corridors or tunnels, identification need only be placed at each end of the corridor or tunnel. Pipes circumscribing missile silo walls shall be marked once in each quadrant. Tags shall be placed at necessary intervals to ensure that at least one tag is visible from any observation point along the line.

COLOR	FED-STD-595 CODE NUMBER
Blue	15102
Green	14187
Yellow	13655
Orange	12197
Red	11136
Brown	10049
Gray	16473

Figure 1-96. Color Specifications

FUNCTION	COLOR	SYMBOL	GRAPHIC SYMBOL	TAPE FEDERAL STOCK NUMBER
Fuel	Red	4-Point Star		7690-753-4728
Rocket Oxidizer	Green, Gray	Crescent		
Rocket Fuel	Red, Gray	4-Point Star Inside Crescent		
Water Injection	Red, Gray, Red	Inverted Chevrons		7690-753-4740
Lubrication	Yellow	Staggered Squares		7690-753-4741
Hydraulic	Blue, Yellow	Circle		7690-753-4727
Solvent	Blue, Brown	Horizontal Stripes		
Pneumatic	Orange, Blue	Continuous X-Form Lattice		7690-753-4734
Instrument Air	Orange, Gray	Continuous Zig-Zag		7690-753-4742
Coolant	Blue	Horizontal S		7690-753-4737
Breathing Oxygen	Green	Rectangle		7690-753-4730
Air Conditioning	Brown, Gray	Dot Pattern		7690-753-4731
Monopropellant	Yellow, Orange	Block T		
Fire Protection	Brown	Horizontal Diamond		7690-753-4732
De-Icing	Gray	Staggered Triangles		7690-753-4733
Rocket Catalyst	Yellow, Green	Vertical Stripes		
Compressed Gas	Orange	Broad Diagonal Stripe		7690-753-4736
Electrical Conduit	Brown, Orange	Flash of Lightning		7690-753-4735
Inerting	Orange, Green	Staggered Pipe Crosses		
Warning	Black, White	Skull & Crossbones		7690-753-4745

Figure 1-97. Color Code, Geometric Symbols and FSN

1-615. PAINT. Suitable paints conforming in hue, value, and chroma to FED-STD-595, to the requirements specified in figure 1-96 and 1-97, and which have no deleterious effect upon the material used within the lines, shall be used for identification of lines in engine compartments where there is a possibility of tapes being drawn into the engine intake. Such paints shall be used also for lines four inches or larger in diameter, except cold and stainless steel lines. The painted identification shall consist of painted letters identifying the specific contents and working pressure, painted letters identifying the primary hazard as applicable, colors denoting function, and a painted arrow indicating direction of flow if applicable. See figure 1-99 for a stencil that may be used for paint applications. Geometric symbols need not be used where identification is accomplished with paints. Carbon-steel lines and other lines requiring a protective finish shall, in addition, be painted white, FED-STD-595 Color No. 17875, as background for the paint. The white painted background shall extend at least the width of the identification band beyond both ends of the identification or to the ends of the line, whichever is shorter.

1-616. Color coding shall appear on the left-hand side of the identification as shown in figure 1-99 and shall be two (±1/4) inches wide for lines four to 13 inches in diameter, and six (±3/4) inches for lines larger than 13 inches in diameter. Letters shall be painted black on a white background, or they may be stenciled. Letters shall be 1-1/4 inches high for lines four to six inches in diameter, 2-1/2 inches high for lines eight to 10 inches in diameter, and 3-1/2 inches high for lines larger than 10 inches in diameter. Stem width of direction of flow arrows shall be one-eight the diameter of the line, maximum, and total arrow length shall be equal to the diameter of the line.

1-617. Painted identification bands shall be located the same as tags (paragraph 1-614).

1-618. MISCELLANEOUS IDENTIFICATIONS.

1-619. AIR CONDITIONING DUCTS. Lines under 30 inches outside circumferential measurement shall be identified with the air conditioning geometric symbol shown in figure 1-97, and a decal showing the design temperature of the flowing medium. Lines with circumferential measurement larger than 30 inches shall be painted with a 12 x 12-inch sign, 1-1/2-inch black letters on a white background, reading AIR CONDITIONING in two lines, followed by a third line showing the design temperature of the flowing medium.

1-620. ELECTRICAL IDENTIFICATION. Refer to paragraph 5.6.1, MIL-STD-1247.

1-621. VENTS, FILLS, AND DRAINS. All lines venting to the outside atmosphere, or utilized as fill or drain, shall, in addition to required identification, be marked VENT, FILL, DRAIN, FILL AND/DRAIN, etc., as applicable. These markings shall be black on a white background on a subsidiary decal or tag, or painted, as appropriate. The pressure at which the gas or liquid is vented shall be shown. Dimensions and letter sizes shall conform to those of the associated identification.

1-622. FLEX HOSE IDENTIFICATION. Refer to paragraph 5.6.4, MIL-STD-1247.

1-623. FLEX HOSE.

1-624. INSTALLATIONS.

1-625. High pressure flex hose assemblies should not be installed in a manner that will place a mechanical load on the hose. Hoses will change length from plus two minus four percent when pressurized. Provide slack or bend (A, figure 1-100) to compensate for change in length. Hose lines which pass close to a hot pipe or manifold must be protected with a fire-proof boot or metal baffle (B). When a hose assembly is to be subjected to considerable flexing or vibration, leave sufficient slack between rigid fittings (c). If high operating pressures are applied to a twisted hose (D), the hose may rupture, or the attaching nut may become loose. Avoid sharp bends in hose (E). A good working rule is to make the bend radius five or more times the outside diameter of the hose. Use elbows and fittings (F) to make neat installations and to facilitate quick inspection and maintenance.

1-626. RESTRAINT OF FLEX HOSE.

1-627. Flex hose is a poor substitute for rigid tubing and its usage shall be avoided whenever possible.

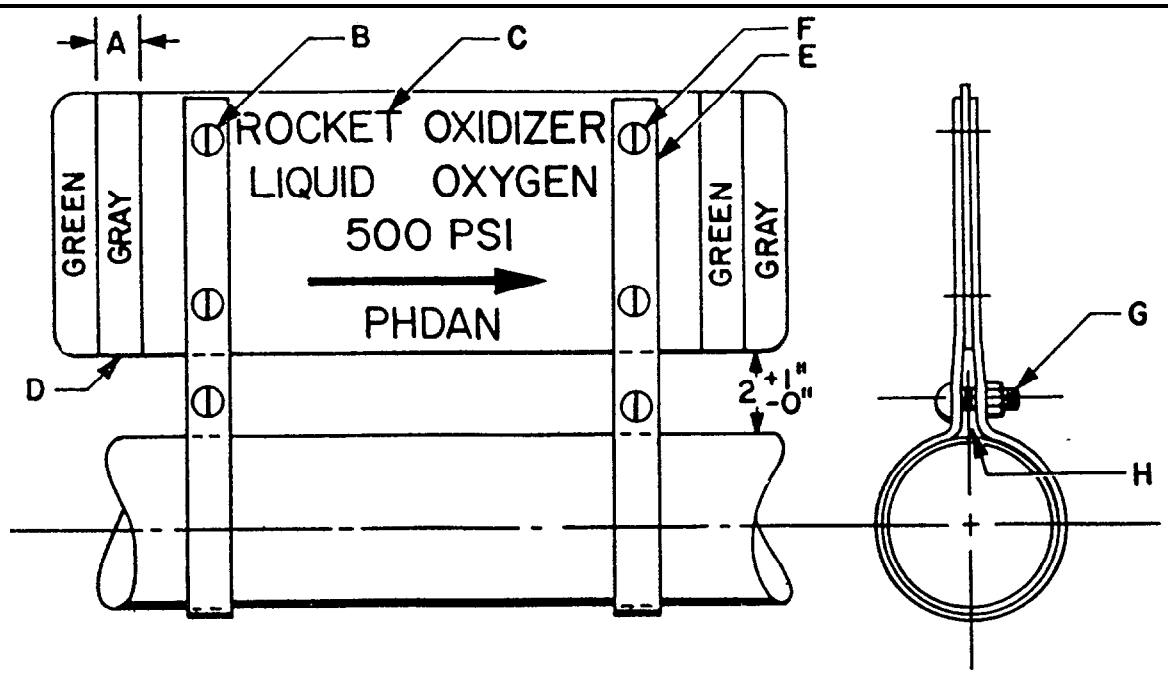

A. EACH COLOR BAND TO BE 1/2 ± 1/16-INCH.

B. 10-24 x 1/2-OR 3/8-INCH STAINLESS STEEL ROUND HEAD STOVE BOLT (4 PLACES).

C. LETTERS AND NUMBERS ON TAGS SHALL BE 1/2-INCH HIGH FOR PIPELINES LESS THAN FOUR INCHES IN SIZE AND ONE INCH HIGH FOR PIPELINES FOUR INCHES AND LARGER.

D. IDENTIFICATION COLOR BAND AT BOTH ENDS.

E. MOUNTING STRAPS TO BE MADE FROM 16 GAGE STAINLESS STEEL. WIDTH 1/2-INCH MINIMUM, 5/8-INCH MAXIMUM. NO PAINTING REQUIRED.

F ALL HOLES TO BE PUNCHED THROUGH TAG MATERIAL PRIOR TO PRIMER COATS.

G. 10-24 STAINLESS STEEL ROUND HEAD STOVE BOLT LENGTH TO SUIT.

H. GAP TO BE 1/4-INCH MINIMUM, 1-1/2-INCH MAXIMUM.

J. IDENTIFICATION TAG SHALL BE THREE INCHES BY SIX INCHES FOR PIPELINES LESS THAN FOUR INCHES IN SIZE AND SIX INCHES BY 12 INCHES FOR PIPELINES FOUR INCHES OR LARGER.

K. IDENTIFICATION MAY BE PLACED BELOW THE PIPELINE. THIS PRACTICE SHOULD BE AVOIDED ON COLD LINES.

L. TAG MATERIAL TO BE 16-GAGE BWG CARBON SHEET STEEL. BREAK ALL EDGES. SPRAY PAINT TWO COATS OF FEDERAL SPECIFICATION TT-P-636 PRIMER, AND ONE OR TWO COATS, AS NECESSARY TO COVER, OF FEDERAL SPECIFICATION TT-R-489 ENAMEL WHITE. (COLOR 17875)

M. LENGTH DIMENSION OF TAG IN MINIMUM AND MAXIMUM BE INCREASED 50 PERCENT TO ACCOMMODATE PRINTING AND COLOR CODING, I.E. 3x6-INCH TAG MAY BE 3 ± 1/2 INCHES x 6 ± 3/16-INCHES.

Figure 1-98. Identification Tag Detail

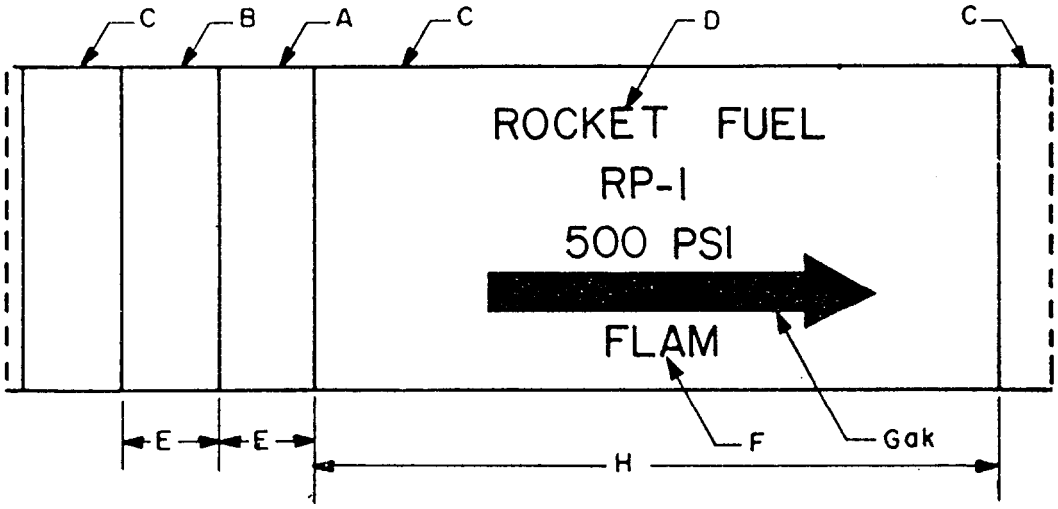

A. GRAY PAINT.

B. RED PAINT.

C. WHITE PAINT.

D. BLACK PAINT (TYPICAL ALL LETTERS AND ARROWS).

E. BANDS SHALL BE TWO INCHES AND SIX INCHES WIDE FOR PIPE FOUR INCHES TO 13 INCHES IN DIAMETER AND OVER 13 INCHES, RESPECTIVELY,

F. LETTER SIZES SHALL BE 1-1/4 INCHES, 2-1/2 INCHES, AND 3-1/2 INCHES HIGH FOR PIPE SIZES FOUR INCHES TO SIX INCHES, EIGHT INCHES TO 10 INCHES AND OVER 10 INCHES, RESPECTIVELY.

G. ARROW STEMS SHALL BE 1/8 OF PIPE DIAMETER IN WIDTH AND ONE TIMES THE DIAMETER IN LENGTH.

H. LENGTH OF BAND TO ALLOW CLEARANCE OF 1/2 OF THE HEIGHT OF THE LETTERS AT BOTH ENDS OF THE LONGEST LINE OF LETTERING.

J. WHITE BAND TO ENCIRCLE PIPE WHERE PIPE MOUNTING ALLOWS 360° VIEWING. A MINIMUM OF 1/2 THE PIPE CIRCUMFERENCE MUST BE PAINTED ON SET OF LABELING REQUIRED PER WHITE BAND.

K. ARROW TO POINTAWAY FROMCOLOR BANDS.

Figure 1-99. Identification Stencil Detail

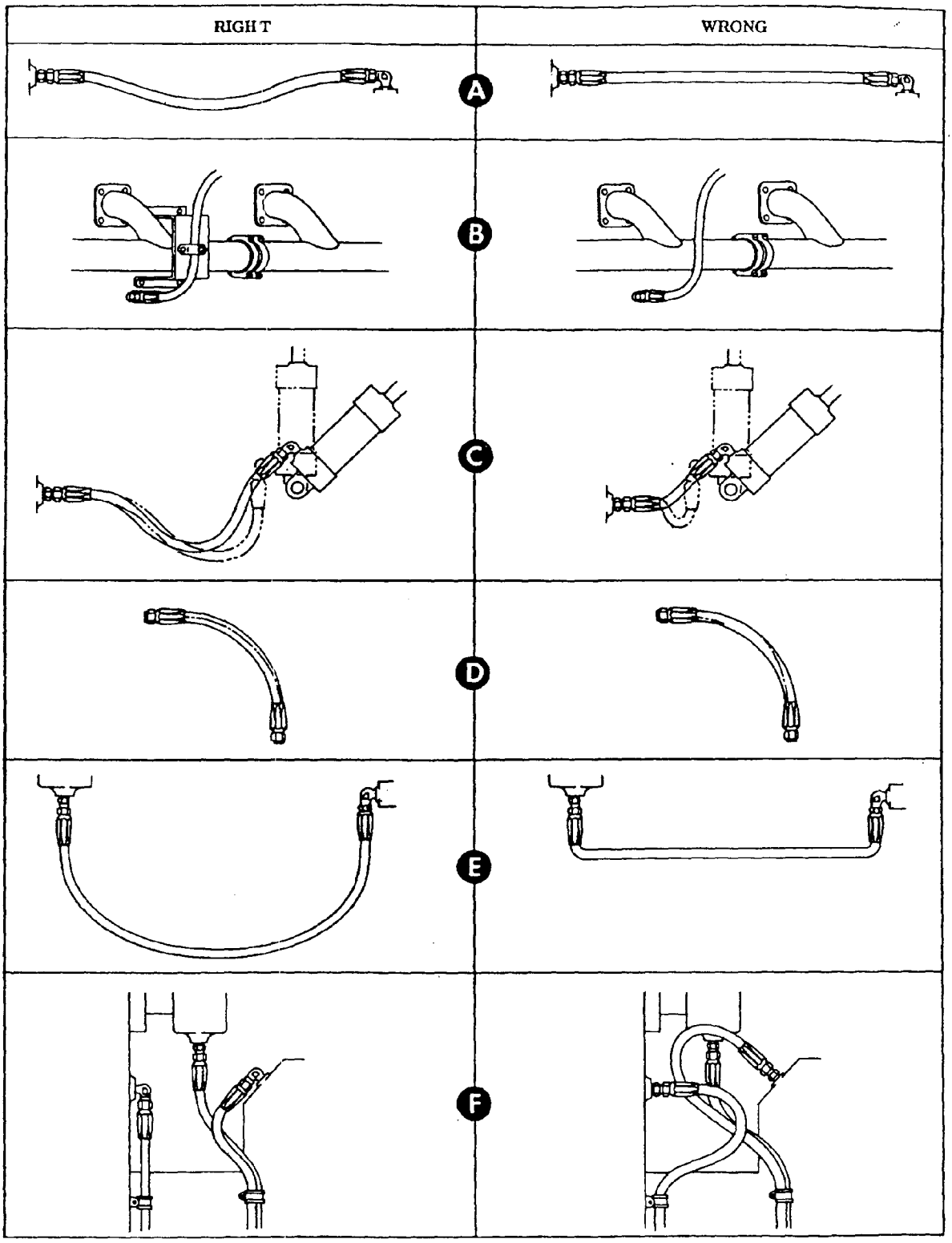

Figure 1-100. Installation of Flex Hose

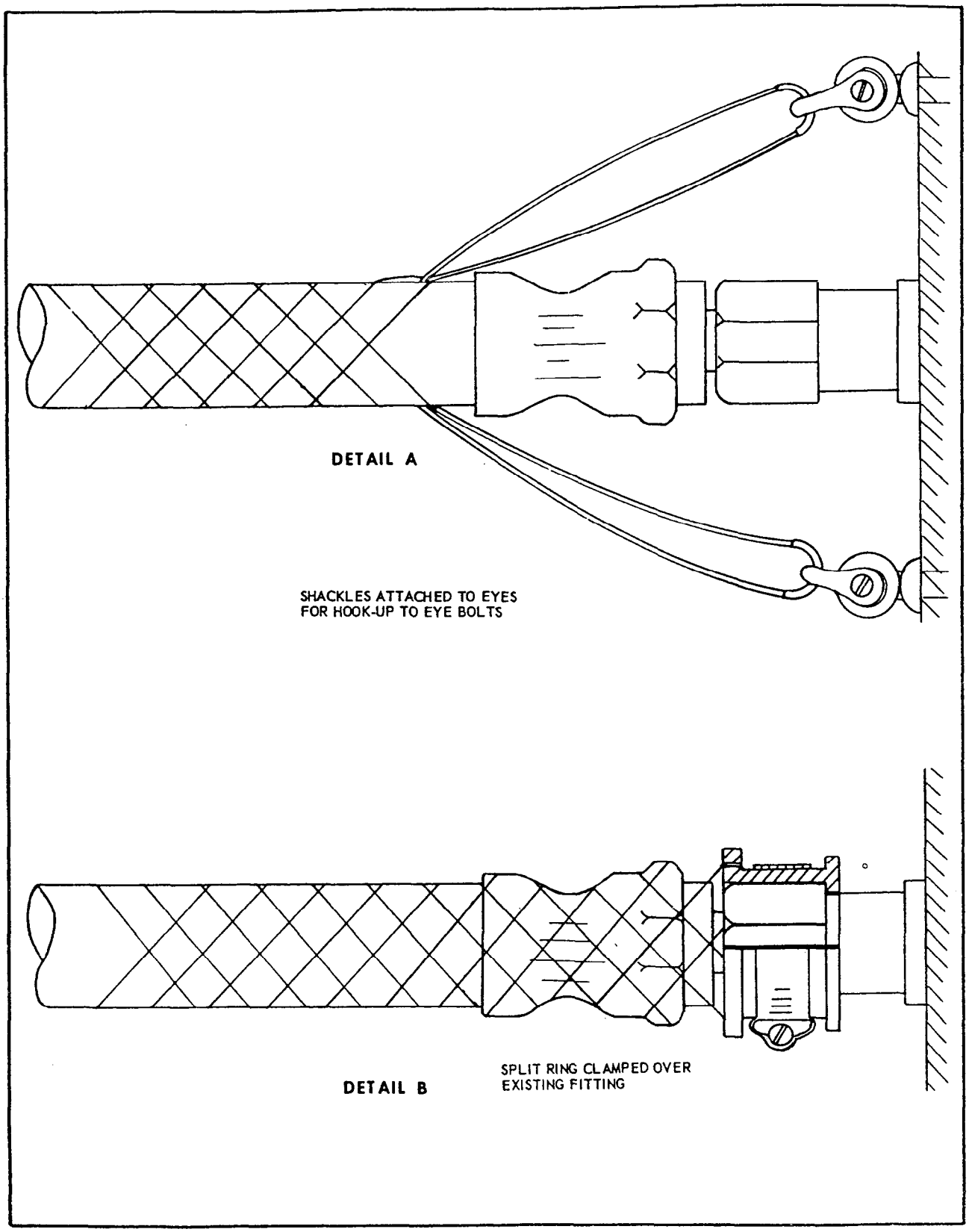

Figure 1-101. Installation of Restraint of Flex Hose

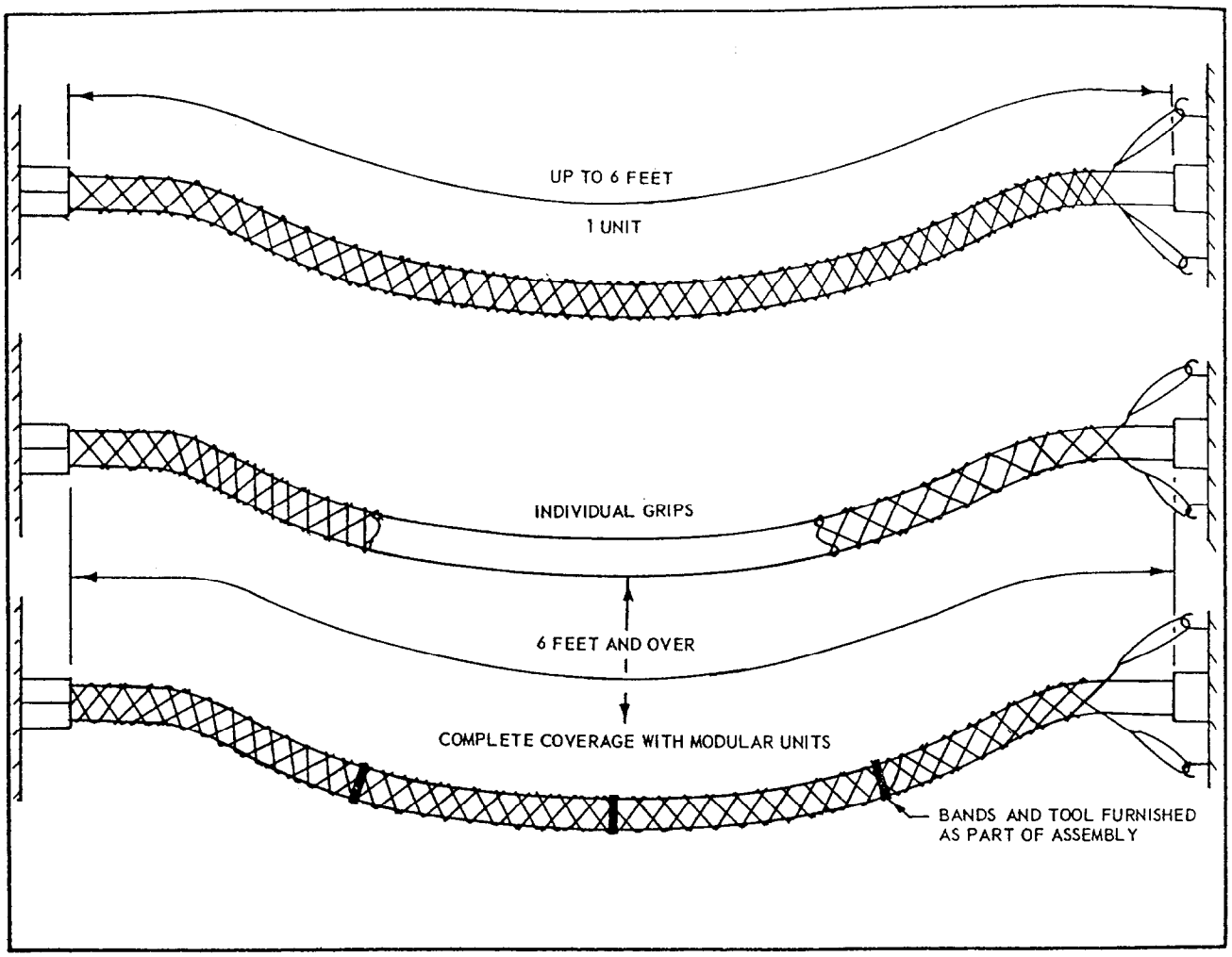

Figure 1-102. Typical Hose Containment Assemblies

1-628. When flexible hose is used with pressures of 500 psig or higher, greater protection is required against the effect of vibration and shock waves. The ideal method is to contain the hose by a structural system separated from the hose and in no way interfering with the normal flexibility of the hose. The hose containment assembly should be secured to a substantial object such as a bracket on a vehicle or a brace on installed equipment.

1-629. In the event of hose or hose fitting failure, a hose containment assembly (figure 1-102) will sustain the resulting shock, hold the force on a longitudinal axis, exerting low unit stress throughout the length of the containment assembly and will prevent whipping of the hose, preventing injury to personnel and damage to equipment.

1-630. In the event of hose material cold flowing under fitting pressure, this type containment, properly installed, will hold the hose in the fitting but will not prevent leakage. Hose containment assemblies will be engineered for the requirements and will be designed in various lengths with various methods of attachment, with multiple weave, double weave, single weave and/or in modular units. A safety factor of 3 will be used, based on a function of the hose ID and pressure. Hose containment assemblies will be submitted to provide for prototype testing requirements, unless the assembly has already been approved. All assemblies will be identified by an assembly number. Hose containment assemblies similar to Kellems Company Assembly No. 014-02-004 are examples of the desired type. On high volume, low and medium pressure flex hoses, containment similar to the Brogart Safety Latch is recommended for both ends of the hose.

1-631. Where flex lines are used temporarily without hose containment assemblies at 500 psig or greater, they should have a safety chain or

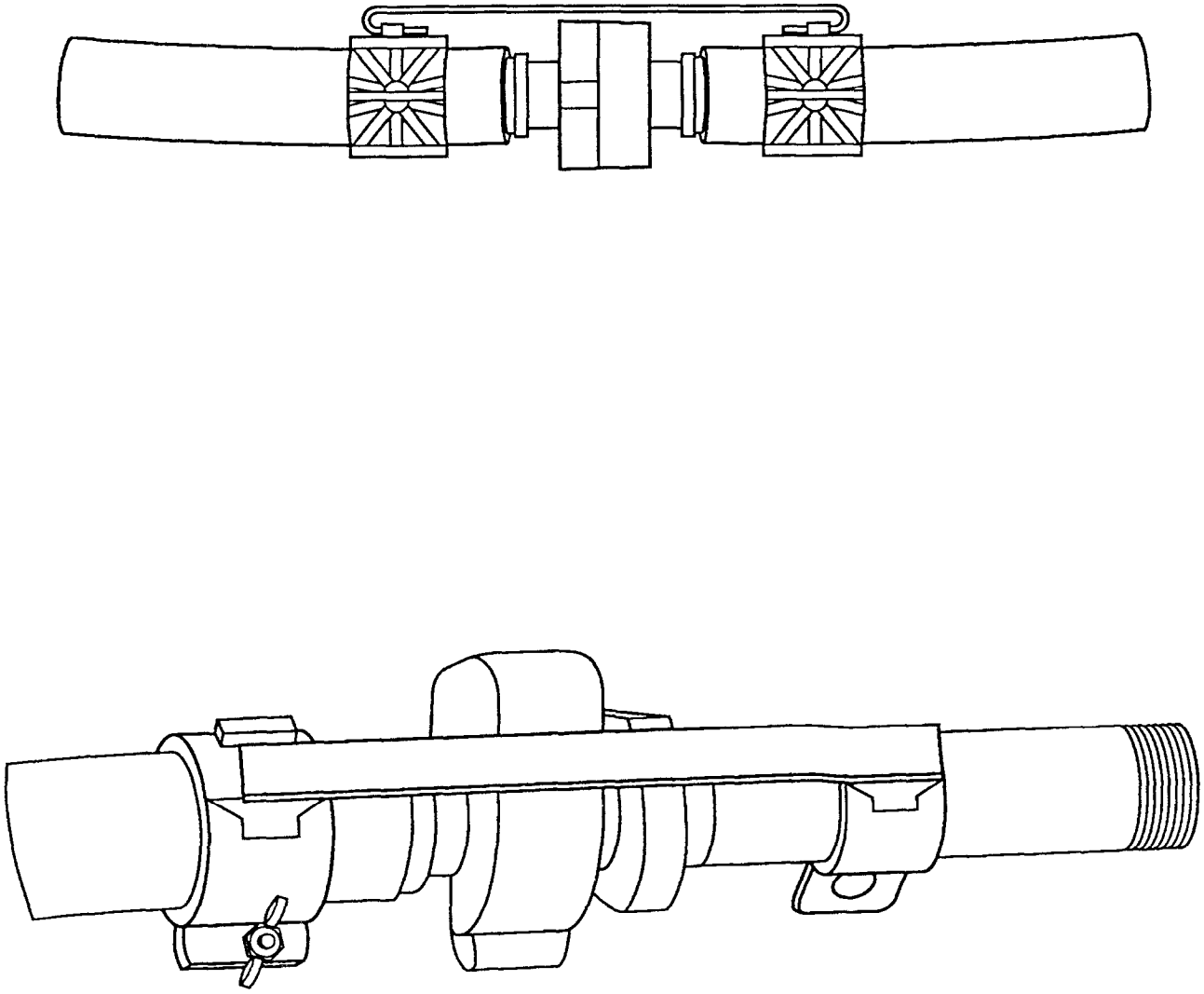

Figure 1-103. Brogart Safety Latches Installation

cable securely attached to each end of the line and to a substantial object such as a bracket on a vehicle or a brace on installed equipment.

1-632. When hose lines less than two inches diameter have a working pressure in excess of 3500 psi, they shall be weighted with 100 pound sand bags or lead ingots at intervals not to exceed six feet.

1-633. In lieu of weights, lines may be held in place with nylon or cotton web straps. Straps must be at least one inch in width, and be attached to a floor grating or similar immovable object. Distance between straps on a high pressure line shall not exceed six feet.

NOTE

Methods and devices for attachment of the hose containment to the equipment or structure must be approved by the cognizant Safety and Engineering Officer for each new application.

1-634. TRANSFER OF COMPONENTS FROM ONE SERVICE FLUID TO ANOTHER.

1-635. Generally, a component shall not be transferred from one service fluid or group of compatible service fluids to another service fluid or group of compatible service fluids unless it is specifically reserviced for that fluid or group of compatible fluids into which it is to be installed.

1-636. CONNECTING SYSTEMS OF DIFFERENT PRESSURE RATINGS.

1-637. Each section of a system supplied through one or more pressure reducing devices, where the maximum inlet pressure exceeds the maximum allowable working pressure of the section, shall be protected by a relief device. The relief device shall be adequately sized to prevent the pressure from rising, within code tolerance, above the maximum working pressure.

CHAPTER 1

SECTION VI

TESTING COMPONENTS AND SYSTEMS

1-638. GENERAL TEST REQUIREMENTS.

1-639. Pressure and cryogenic propellant storage and loading systems, because of their corrosion, temperature, and flow demands, require periodic and exhaustive testing to ensure high reliability, integrity, and safety in operational use. Where possible, hydrostatic testing at determined values above the operating pressure is the preferred means of obtaining this end. Hydrostatic testing is a relatively safe and reliable method of testing. Pneumatic testing may be authorized by the cognizant engineering and safety personnel on specific systems where hydrostatic testing is not possible or where the integrity of the system would be jeopardized by the hydrostatic test fluid. However, in no case will this method be used as a substitute for hydrostatic testing without specific and prior approval of both engineering and safety personnel because of the added dangers involved.

1-640. Generally, every component of a high-pressure system shall be capable of withstanding, without failure, leakage, or permanent deformation, an internal hydrostatic test at a pressure of 1-1/2 times the maximum allowable working pressure.

CAUTION

Items such as pressure vessels not specifically designed under either the ASME or ICC codes may require a lower hydrostatic test pressure. Consult the applicable system technical manual.

1-641. TYPES OF HYDROSTATIC TESTS.

CAUTION

Hydrostatic test fluids must be selected that will be compatible with and not impact sensitive when mixed with small quantities of the system fluid of the system being tested.

1-642. WATER JACKET VOLUMETRIC EXPANSION METHOD.

1-643. This method consists of enclosing the cylinder in a vessel completely filled with water and measuring, in a suitable device attached to the vessel, the total and permanent volumetric expansion of the cylinder by measuring the amount of water displaced by expansion of the cylinder when under pressure and after pressure is released. This method is the only one recognized by ICC and gives the most realistic representation of the quality and integrity of the material in the cylinder.

1-644. PROOF-PRESSURE METHOD.

1-645. This method consists of examining the cylinder under test pressure for leaks and defects. This method cannot be used to meet normal ICC requirements.

1-646. REFERENCE TO HYDROSTATIC TESTING.

1-647. It is recommended that, when hydrostatic testing is referred to in the preparation of contracts, work statements, work orders, etc, one of the following be specifically referred to:

a. Hydrostatic testing involving ICC cylinders shall be referred to as by the water jacket method. Reference to Code of Federal Regulations, Title 49, parts 71 through 90, paragraph 73.34j shall also be noted.

b. Hydrostatic testing involving ASME type vessels shall be referred to as by the proof-pressure method. Reference to the ASME Code for Unfired Pressure Vessels, paragraph UG-99, may be noted if necessary for clarification.

c. Hydrostatic testing involving other types of hardware or systems shall be referred to as a proof-pressure hydrostatic test, noting the test pressure as so many psig, or fractional ratio of the maximum allowable working pressure (i.e., 1-1/4, 1-1/2 or 5/3), whichever is established as the requirements.

1-648. HYDROSTATIC TEST REQUIREMENTS PRIOR TO INSTALLATION.

1-649. GENERAL.

1-650. All pressure vessels, accumulators, fabricated pipe items, piping and tube assemblies, piping and tubing installations, all types of valves (shutoff, solenoid, regulator, etc.) and filters shall be hydrostatically tested prior to installation into any system.

1-651. PRESSURE VESSELS, PORTABLE.

1-652. When vessels are portable, they generally fall under the ICC category and are subject to ICC regulations.

1-653. Newly fabricated vessels that are subject to ICC regulations are pressure tested under the following procedures listed in Title 49 of the Code of Federal Regulations. The general outline of the ICC hydrostatic test procedure is included here for information only.

1-654. The general details of the ICC hydrostatic test procedure are as follows:

a. The hydrostatic test must be performed by a test method, such as the water jacket method, that will give accurate volumetric expansion data. The pressure gage must permit reading to accuracy of one percent. The expansion gage must permit reading of total expansion to accuracy either of one percent or 0.1 -cubic centimeter.

b. The pressure must be maintained for at least 30 seconds and sufficiently longer to ensure complete expansion. Any internal pressure applied after heat treatment and previous to the official test must not exceed 90 percent of the test pressure. If, due to failure of the test apparatus, the test pressure cannot be maintained, the test may be repeated at a pressure increased by 10 percent or 100 psig, whichever is lower.

C. Permanent volumetric expansion must not exceed 10 percent of total volumetric expansion at test pressure.

d. Each cylinder must be tested to at least 5/3 times the maximum allowable working pressure.

1-655. PRESSURE VESSELS, STATIC.

1-656. Static or permanently installed vessels usually fall under the local or regulatory codes, which generally follow the ASME Code.

1-657. Newly fabricated vessels which are stamped with the ASME Code are tested under the following procedure listed in section VIII of the ASME Code. This procedure has been included here for information only.

1-658. HYDROSTATIC TEST (UG-99 SECTION VIII ASME CODE). The general details of the ASME hydrostatic test procedure are as follows:

a. All completed vessels shall satisfactorily pass a hydrostatic test in which all parts of the vessel are subjected to a hydrostatic pressure at least equal to 1-1/2 times the maximum allowable working pressure to be marked on the vessel, multiplied by the lowest ratio of the stress value for the test temperature on the vessel to the stress value for the design temperature.

b. The upper limit for the hydrostatic test pressure shall be two times the maximum allowable working pressure. If the pressure is allowed to exceed the value prescribed to the degree that the vessel is subjected to visible permanent distortion, the inspector shall reserve the right to reject the vessel.

C. Where a hydrostatic test is not practical, tests shall be conducted in accordance with paragraph 1-659.

d. Following the application of the hydrostatic test pressure, an inspection shall be made of all joints and connections. This inspection shall be made at a pressure not less than 2/3 of the test pressure.

e. Any nonhazardous liquid, at any temperature, may be used for the test if it is below its boiling point. Combustible liquids having a flash point more than 125°F (52°C) may be used only for near atmospheric temperature tests. Combustible liquids having a flash point less than 125°F (52°C) shall not be used for hydrostatic testing. It is recommended that the liquid temperature be not less than 60°F (16%) where practicable. The test pressure shall not be applied until the vessel and its contents are approximately the same temperature.

f. Vents shall be provided at all high points of the vessel, in the position in which it is to be tested, to purge possible air pockets while the vessel is being filled.

CAUTION

A relief valve, set to a maximum of 10 percent above the test pressure should be installed in the test system. When open, this valve should have a flow capacity greater than the maximum output of the pump or other pressurizing device used in the system.

g. Before pressure is applied, the test equipment shall be inspected to see that it is secure and that all low-pressure filling lines and other appurtenances that should not be subjected to the test pressure have been disconnected.

1-659. PNEUMATIC TEST IN LIEU OF HYDROSTATIC TEST (UG100 ASME CODE). The pneumatic proof test procedures may be prescribed when:

a. Vessels are so designed and/or supported that they cannot safely be filled with water.

b. Vessels not readily dried are to be used in services where traces of the testing liquid cannot be tolerated and the parts of which have, where possible, been previously hydrostatically tested.

1-660. Pneumatic proof test procedures are as follows:

WARNING

Testing with air or gas is extremely hazardous and should be done only when absolutely necessary, and when special precautions to safeguard personnel have been made and approved by safety personnel. Testing systems with cryogenic test fluids is extremely hazardous and all precautions of testing the system with air and gas should be observed.

a. The pneumatic test pressure shall be at least equal to 1-114 times the maximum allowable working pressure stamped on the vessel, multiplied by the lowest ratio of the stress value at the test temperature of the vessel to the stress value at the design temperature. In no case shall the pneumatic test pressure exceed 1-1/4 times the maximum allowable pressure.

b. The pressure in the vessel shall be gradually increased to not more than 1/2 of the test pressure. Thereafter, the pressure shall be increased in steps of approximately 1/10 of the test pressure until the required test pressure has been reached. Then the pressure shall be reduced to a value equal to 4/5 of the test pressure and held for a sufficient time to permit inspection of the vessel.

1-661. VALVES, FITTINGS, AND SECTIONS OF PIPE OR TUBING.

1-662. Because of the hazards involved with high-pressure systems, special precautions must be exercised in the preparation of valves, fittings,

and sections of pipe or tubing prior to installation into the systems.

1-663. HYDROSTATIC TEST. All new pressure piping components which include any types of valves (shutoff, solenoid, regulator, etc), piping, and tubing which have not been certified as hydrostatically tested by the manufacturer shall be hydrostatically tested at 1-1/2 times the maximum allowable working pressure.

1-664. This test shall be held for a minimum period of 5 minutes or of sufficient duration to allow inspection for failure, leakage, distress, or distortion (other than elastic distortion), any one of which shall be sufficient cause for rejection.

1-665. FUNCTIONAL AND/OR LEAK TEST. All new installed pressure piping components shall be given a functional and/or leak test at or near the intended working pressure of the component. The functional and/or leak test may be performed in conjunction with, but following, the hydrostatic test, when a hydrostatic test is required.

CAUTION

A functional and/or leak test shall not be conducted above the maximum allowable working pressure of the item. Damage to equipment may result.

1-666. If the intended working pressure is not known, the functional and/or leak test shall be performed between 67 and 100 percent of the maximum allowable working pressure for components rated at 3,000 psig and below, and between 80 and 100 percent of the maximum allowable working pressure for components rated above 3,000 psig.

WARNING

While gaseous nitrogen is not toxic, it can act as an asphyxiant by displacing the amount of air necessary to sustain life. Air breathing apparatus should be available, rescue plans established, escape routes planned, and the oxygen content of the work area should be monitored when using gaseous nitrogen as a test fluid.

1-667. Dry, hydrocarbon-free gaseous nitrogen shall normally be used as the test fluid. Items shall be at or near the ambient temperature. Water may be used as the test fluid for items being serviced for water, fuel, or other liquid service when ultimate dryness is of no concern.

WARNING

When liquid nitrogen is used as a test fluid, a vent valve of suitable size, determined by cognizant engineering and safety personnel, shall be placed in the test system to prevent any build-up of vapor pressure.

1-668. Liquid nitrogen shall be used for the test fluid for items tested for liquefied gas service when the item function or leakage is established as critical and must be know prior to installation.

1-669. Function and leak test procedures are as follows:

a. Install valve with pressure on the upstream port and increase pressure slowly to the required test pressure.

b. Actuate valve several times until a satisfactory functional test is obtained.

c. Each valve shall actuate freely and positively with the test fluid at the required test pressure.

d. Inspect for leakage by soaping the joints with soap solution. If leakage is found, release pressure, repair leak, and repeat test until a leakproof item is obtained, or it is established that a component part of the item needs replacing.

NOTE

The maximum allowable leakage rates for various types of valves and facility components shall be determined by the application.

1-670. SCHEDULE OF HYDROSTATIC TESTS FOR INSTALLED ITEMS.

1-671. Hydrostatic tests will be conducted as specified in the system technical manual. All new systems will be hydrostatically tested before being placed in operation. Components hydrostatically tested when procured do not require retest before installation.

a. All items defined in this technical manual that have no published procedures for periodic hydrostatic testing shall be investigated by cognizant engineering and safety personnel in the appropriate maintenance and/or safety organization under which jurisdiction the particular item falls. A test procedure shall be specified for the item by this authority and published under the item's system technical manual, if applicable.

1-672. In the absence of specific instructions in a particular system technical manual, the following requirements will apply:

WARNING

Before applying the general rules listed below, due consideration should be given to items included in systems which are hazardous to personnel or where failure of the item would impose a serious threat to the effectiveness of a weapon system.

1-673. PRESSURE VESSELS, PORTABLE.

1-674. DOT (Department of Transportation) or ICC Vessels 3A and 3AA stenciled around the threaded portion of the vessel have no service limit, but require a hydrostatic test every five (5) years. Vessels Coded 3HT require a hydrostatic test every three (3) years and shall be condemned after 15 years from date of manufacture.

1-675. PRESSURE VESSELS, STATIC.

1-676. Provisions for hydrostatic retest of ASME type vessels are based on an internal and external visual inspection for corrosion and damage, not on a time requirement, unless specified in the applicable system technical manual. Thus, these vessels shall require retest when the following occurs:

NOTE

If the vessel cannot be internally inspected, consult cognizant engineering and safety personnel, who shall determine the schedule for hydrostatic testing.

a. A vessel upon visual inspection shows signs of excessive corrosion or other deterioration.

b. A vessel has been dropped or damaged.

C. A vessel has been modified or repaired where the integrity of the vessel may be affected.

d. A vessel upon being moved shall be inspected and rehydrostatically tested only if evidence as described in a, b, or c above is found to exist.

1-677. The test shall be conducted in accordance with paragraph 1-688.

1-678. VALVES, FITTINGS, AND SECTIONS OF PIPE OR TUBING.

1-679. Provisions for hydrostatic retest are based on visual inspection for corrosion and damage, not on a time requirement. Hydrostatic retest is required when the following occurs:

a. Pressure piping items have been rewelded or remachined to a degree where the component strength is questionable.

b. Pressure piping items have been subjected to extreme heat or blast conditions and items of salvage do not have a known history.

c. Pressure piping items show signs of excessive corrosion or other deterioration.

1-680. The test shall be conducted in accordance with paragraph 1-688.

1-681. All weld-fabricated piping systems shall be hydrostatically tested at 1-1/2 times the maximum allowable working pressure when the following occurs:

a. The system upon visual inspection shows signs of excessive corrosion or other deterioration.

b. The system has been physically damaged.

c. The system has been modified or repaired by welding, or where the integrity of the system may be affected. Pneumatic tests or other nondestructive tests may be used in lieu of this requirement, with specific approval, when moisture and corrosion considerations warrant such a substitution.

1-683. All flared-tubing-fabricated systems of 3,500 psig and over shall be hydrostatically tested when the following occurs:

NOTE

Systems operating at pressures of less than 3,500 psig need only be leak tested at normal working pressures.

a. The system upon visual inspection shows signs of deterioration.

b. The system has been physically damaged.

c. The system has been modified with the addition of new untested flares to the system.

1-684. FLEX HOSE.

1-685. All new hoses shall be hydrostatically tested when manufactured and marked in accordance with TO 42E1-1-1. Hoses which have reached their storage life shall be handled in accordance with 00-20K series technical orders. All aircraft and missile hose used within their designed pressure limitations and intended environment are not subject to a periodic hydrostatic retest unless called for by the system technical orders. All AGE and facility servicing hose shall be hydrostatically tested if serviceability appears questionable. Shop or section supervisors will determine the need for hydrostatic testing of AGE and facility servicing hoses. Normally, underrated hoses should not be used; however, hoses that by requirement are used in excess of their maximum design pressure shall be rehydrostatically tested annually (para 1-261).

1-686. All hoses as specified in paragraph 1-685 shall be inspected annually and those specified for rehydrostatic test shall be hydrostatically tested at 1-1/2 times the maximum allowable workable pressure. All hydraulic hoses for aircraft use or for AGE use shall be pressure tested using the hydraulic service fluid specified on the metal tag noted in paragraph 1-687; water will not be used for pressure testing hoses designed for hydraulic fluids.

1-687. A metal tag bearing the following information shall be attached to the hose assembly.

a. Date the latest hydrostatic test (month and year)

b. Number of times tested, in parenthesis (example: 9-61(3))

c. Service fluid

d. Maximum allowable working pressure

Where metal tags are subject to loss because of rough usage or other reasons, and space is available, the hydrostatic test date may be imprinted on the hose fitting with an electric etching pencil.

1-688. DETAIL REQUIREMENTS FOR HYDROSTATIC TEST AND LEAK TEST OF INSTALLED SYSTEMS AND COMPONENTS.

1-689. PERSONNEL AND EQUIPMENT.

a. Test crew shall consist of two or more members and an inspector.

b. Inspector shall be present at all times when a system or component is under test.

c. Test crew should have the following equipment:

(1) Hydrostatic pump (portable), 0 to 6,000 psi, FSN 4320-730-9258.

(2) Hydrostatic pump (remote controlled), 0 to 30,000 psi, FSN 4320-086-7655, required on systems with operating pressures above 4,000 psig.

(3) Vacuum pump, FSN 4310-516-3901.

(4) CEC Moisture Monitor, Model 26-350 (as specified in TO 42B7-3-1-1).

(5) Necessary superpressure tubes, valves and fittings to connect hydrostatic pump to system or component.

d. Inspector shall have a checklist covering all details of the test; checklist to be filed with test report.

e. Before any system or component is pressurized the air pressure and hydraulic pressure shall be adjusted so that the hydrostatic pump cannot deliver hydrostatic pressure in excess of the desired test pressure for the system under test.

f. Inspector will record this pressure on checklist and the pressure drop required for the hydrostatic pump to operate and automatically compensate for the reduction in pressure.

g. The cognizant engineer and safety officer will specify the hydrostatic pump to be used for each test.

h. Moisture free systems hydrostatically tested with trichloroethylene on other volatile fluids should be purged by vacuum (10 Torr), provided the system is engineered to withstand the vacuum. Cognizant engineering officer's approval shall be obtained before any system is subjected to vacuum.

1-690. INSTALLED SYSTEM CLASSIFICATION FOR HYDROSTATIC AND LEAK TESTING.

1-691. GENERAL.

1-692. System classification for testing purposes is as follows:

a. Class I: Systems that can be tested with water.

b. Class II: Systems that can be tested with the fluid used in the system.

C. Class III: Systems that have moisture-free operational requirements that cannot be tested with water or their operational fluid.

d. Class IV: Cryogenic, oxidizer, and other systems with lox-clean operational requirements.

CAUTION

Testing of missile or rocket fuel and oxidizer must be approved by the medical or industrial hygiene officer and cognizant safety officer for test method and test fluid. Appropriate personnel protective clothing and equipment shall be used.

1-693. TESTING CLASS I SYSTEMS.

WARNING

When toxic or corrosive chemicals are used in the test fluid, adequate personnel safety measures, as determined by cognizant safety personnel, are required.

1-694. GENERAL. Tests shall be conducted in a test bay whenever possible. The test fluid shall be clean, filtered water for nonferrous and corrosion-resistant alloys, and/or clean, filtered water with 0.5-percent sodium hydroxide, 0.5-percent sodium nitrite, 0.25-percent monosodium phosphate, and 0.25-percent disodium phosphate for ferrous metals. These percentages are based on percentage by weight.

1-695. Hydrostatic tests with fluids other than water or hydraulic fluid shall be approved by cognizant engineering and safety personnel.

1-696. Individual components such as relief valves, regulators, and burst diaphragms normally do not require a hydrostatic test. It is advisable to remove any of these items that may sustain internal damage due to the test and install a cap, plug, or spool in their place. If any of the components, with the exception of relief valves, are installed in the system so that they cannot be removed, the internal workings shall be removed and reinstalled after the test is completed. Relief valves which cannot be removed shall be rendered inoperable by a restraining device. Removal of relief valve parts will destroy the setting of the relief valve.

1-697. Install the test system so that the entire test item cavity will be pressurized and bled free of all air or gas. Increase pressure in the test item slowly to one-half the test pressure and then in even increments (approximately 10 percent of the test pressure) to 1-1/2 times the maximum allowable working pressure and hold for a minimum of five minutes.

1-698. Fluid leakage at the threaded, flanged, or special end connection of the test item is allowable during the hydrostatic test if the test pressure can be maintained by the pressurizing system. If leakage occurs at a threaded end connection, it shall be carefully inspected visually and/or with a thread gage after the test to determine if the end connection of the test item or the mating test fixture was the cause of leakage. If leakage occurs at a flanged or special end connection, the sealing surfaces shall be carefully inspected for scratches, nicks, misalignment, or distortion. If the end connection of the test item is determined to be the cause of the leakage, it shall be reason for rejection. Reduce the pressure to the maximum allowable working pressure or less before inspecting for failure, leakage (other than at the end connections), or distortion; any of these shall be reason for rejection.

1-699. A system may be hydrostatically tested individually in all its sections or as an assembled system, whichever is more feasible.

1-700. SAFETY. Safety precautions shall be exercised during the hydrostatic test as follows:

a. Extra care shall be exercised to bleed all air from the system to be tested.

b. Barricades and designated controlled areas shall be used to the greatest extent possible. Large vessels and extensive systems which are fixed shall have the area controlled to limit access while hydrostatic testing is in progress.

c. The hands shall not be used to probe for leaks. Folded, absorbent paper makes an effective and safe probe. Moisture can easily be detected in the paper.

WARNING

When systems require a continuous blanket purge of inert gas for cleanliness, consult system technical manual and/ or cognizant engineering and safety personnel before attempting to repair leaks or perform welding operations.

d. No attempt shall be made to repair any leaks while system is under pressure.

NOTE

Ring-type joints may be tightened safely at 25 percent of maximum allowable working pressure.

e. Welding operations shall never be attempted while the system is under pressure.

f. Personnel shall not stand in front of relief port when pressure is released.

1-701. HYDROSTATIC TEST PROCEDURE, LIQUID SYSTEMS. Test liquid systems as follows:

WARNING

Before proceeding with test, clear test area of all unauthorized personnel.

a. Raise pressure in increments of either 100 psig or 10 percent of maximum allowable working pressure, whichever is smallest. Stop hydrostatic pump at each pressure increment and hold for one minute. Check pressure loss. Continue raising pressure to the final test pressure (1-1/2 times the maximum allowable working pressure). Hold test pressure for 15 minutes and record pressure change. If pressure loss is excessive, depressurize, determine cause, repair and repeat steps listed above.

b. Determine maximum allowable working pressure of system to be tested. Pressurize the system with the appropriate test fluid in increments of 50, 75, and 90 percent of the maximum allowable working pressure. stop the hydrostatic pump each time and hold for five minutes. If pressure decreases, depressurize, locate and repair leaks and repeat this step.

c. Pressurize system to the maximum allowable working pressure of the test item. Record pressure. Hold for not less than 30 minutes and record pressure again. If pressure loss is excessive, depressurize, determine cause, repair, and repeat steps listed in a. above.

d. Release pressure and drain test fluid from system.

e. Disconnect hydrostatic pressure pump from the system.

f. Blow down with filtered, dry gaseous nitrogen with sufficient velocity and volume to remove residual amounts of test fluid.

1-702. HYDROSTATIC TEST PROCEDURE. GASEOUS SYSTEM. Gaseous systems shall be tested in accordance with liquid system procedures (paragraph 1-701).

CAUTION

When systems are not designed to support the extra weight of the test fluid, provisions shall be made for supporting this extra weight. Aircraft lifting bags inflated to a pressure that will support 90 percent of the weight of the test fluid or a fabricated structure shall be used. Large volume vessels which were designed for low pressure (500 psig and under) are very critical to increased static load. A careful engineering evaluation shall be made before attempting a hydrostatic test and the procedure shall be approved by cognizant safety personnel.

1-703. PNEUMATIC TEST PROCEDURE IN LIEU OF HYDROSTATIC TEST PROCEDURE. When all components have been previously hydrostatically tested before installation and cognizant safety personnel approve a test utilizing gaseous nitrogen or dry air, the following steps shall be taken:

a. The area in which test is performed shall be cleared of personnel.

b. The pressure shall be increased slowly to not more than 1/2 of the test pressure (1-1/4 times the maximum allowable working pressure). Thereafter, the test pressure shall be increased in steps of approximately 1/10 of the test pressure until a pressure of 1-1/4 times the maximum allowable working pressure of the system has been reached. The pressure shall be locked and held for five minutes.

WARNING

Personnel shall not enter the area until after a test has been conducted to a pressure of 1-1/4 times the maximum allowable working pressure, or until the pressure is reduced to zero.

c. The pressure shall then be reduced to 2/3 of the test pressure and the system inspected for leaks or deformation.

1-704. LEAK TEST WITH SERVICE FLUID. After the system has been hydrostatically or pneumatically tested, it shall be leak tested with the service fluid at the maximum allowable working

pressure and temperature. Leaks shall be observed, pressure released, and leaks stopped. This process shall be repeated until the system is satisfactory.

1-705. TESTING CLASS II SYSTEMS.

WARNING

Testing systems with cryogenic test fluids is extremely hazardous and all precautions of testing the system with air and gas should be observed.

1-706. Class II systems shall be tested in accordance with class I procedures as stated in paragraph 1-693, with the exception that the normal service fluid shall be the test fluid.

1-707. TESTING CLASS III SYSTEMS.

WARNING

The liquid and vapor of trichloroethylene can be harmful to the eyes and skin. Excessive vapor concentrations are harmful to breathe. Use only where adequate ventilation is available. Request the medical service to survey work area to determine that proper precautions are being taken and that vapor concentrations do not exceed acceptable limits.

1-708. GENERAL. Systems that have moisture-free operational requirements and cannot be tested with water or their operational fluid shall utilize trichloroethylene, Specification MIL-T-27602, FSN 6810-812-9181.

1-709. SAFETY. Safety precautions shall be exercised during the hydrostatic test in accordance with paragraph 1-700.

1-710. HYDROSTATIC TEST PROCEDURE, LIQUID SYSTEMS. Test liquid systems in accordance with paragraph 1-701. After completion of tests, dry system as follows:

CAUTION

Never pull a vacuum on a test item unless the item has been structurally designed to withstand external pressure. Consult the appropriate system technical manual.

a. Dry by blowing filtered, hot dry nitrogen through the system until a dewpoint of the effluent gas is down to -63°F (-53°C), or evacuate system with a vacuum pump until an equivalent dewpoint is reached.

b. Clean the system in accordance with one system technical manual.

c. Reinstall any removed components and leak test to maximum allowable operating pressure only with filtered dry gaseous nitrogen, Specification MIL-N-6011.

1-711. HYDROSTATIC TEST PROCEDURE, GASEOUS SYSTEMS. Gaseous System Procedure shall be conducted in accordance with liquid system procedures (paragraph 1-710).

WARNING

When systems are not designed to support the extra weight of the test fluid, provisions shall be made for supporting this extra weight. Aircraft lifting bags inflated to a pressure that will support 90 percent of the weight of the test fluid or a fabricated structure shall be used. Large volume vessels which were designed for low pressure (500 psig and under) are very critical to increased static loads. A careful engineering evaluation shall be made before attempting a hydrostatic test and the procedure shall be approved by cognizant safety personnel.

1-712. PNEUMATIC TEST IN LIEU OF HYDROSTATIC TEST PROCEDURE. Where all components have been previously hydrostatically tested before installation and cognizant safety personnel approve a test utilizing gaseous nitrogen or dry air, the system may be tested in accordance with paragraph 1-703.

1-713. LEAK TEST WITH SERVICE FLUID. After the system has been hydrostatically or pneu-

matically tested, it shall be leak tested in accordance with paragraph 1-704.

1-714. TESTING CLASS IV SYSTEMS.

WARNING

When liquid nitrogen is used as a test fluid, a vent valve of suitable size determined by cognizant engineering and safety personnel shall be placed in the system to prevent any build-up of vapor pressure.

1-715. Prior to use in class IV systems, all hydrostatic test fluid must pass the liquid oxygen impact sensitivity test as specified in HqUSAF Bulletin 527 dated 1 May 1961. Trichloroethylene Specification MIL-T-27602, FSN 6810-812-9181, meets the liquid oxygen impact sensitivity test as specified above for ambient temperature testing. Liquid nitrogen shall be used for the test fluid for testing systems at cryogenic temperature.

1-716. The hydrostatic and leak test shall be performed in accordance with paragraph 1-707, with the exception that trichloroethylene, Specification MIL-T-27602, shall be used as the test fluid.

CHAPTER 1

SECTION VII

INSPECTION AND MAINTENANCE

1-717. INSPECTION OF COMPONENTS PRIOR TO INSTALLATION.

1-718. High-pressure valves and components are suitable for many, but not all applications. It is therefore recommended that each valve or component be inspected by the supplier or user and have the item reworked or serviced for specific service condition. (Refer to TO 00-25-229.)

1-719. DISASSEMBLY INSPECTION, CLEANING, AND REASSEMBLY.

1-720. DISASSEMBLY AND INSPECTION. Following an approved proof test, each valve or component shall be completely disassembled and all parts inspected for the following:

a. Proper-type packing and seals.

(1) Approved packing and seal materials are to be used for various service fluids (figure 1-4).

(2) Replace packings that show signs of aging or deterioration.

b. General internal conditions.

(1) Cracks and pits may be sufficient cause for rejection.

(2) All burs and foreign matter shall be removed.

c. Valve seat conditions.

(1) Valve seat materials shall be compatible with service fluid.

(2) Seats shall be inspected for damage.

d. Valve or component parts.

(1) Thread or flange facings shall be inspected for damage.

(2) Thread or flange facings shall be checked for conformance with specifications.

e. Valve actuators.

(1) Actuators shall be checked for alignment.

(2) Actuators shall be checked for proper actuation.

f. Solenoid actuators.

(1) All solenoids shall be checked for conformance with the valve specifications. Electrical systems shall be vaporproof and waterproof. The maximum required pull-in voltage for 24-volt, dc solenoid coils shall be no more than 17 volts, with no limitation on the minimum pull-in voltage when the valve is subjected to two-thirds its normal maximum working pressure. The dropout voltage should be less than the pull-in voltage.

(2) The current shall be no more than one ampere during all tests, except when the valve specifications allow for higher current flow.

g. Liquefied gas entrapment. All liquefied gas service valves shall be inspected for possible liquid entrapment. These entrapment sections shall be vented internally to prevent a possible buildup of extreme pressure and part failure. For example, it may be necessary to drill through half of the gate of gate valves to internally vent the bonnet and packings areas when the valve is in the fully closed or open position.

h. High-pressure gas entrapment.

(1) All valves shall be inspected for possible high-pressure gas entrapment. These entrapment sections shall be vented to prevent injury to personnel upon disassembly of the valve. As a safety precaution, all hand valves should be opened approximately halfway prior to disassembly to vent any trapped pressure.

(2) Some high-pressure needle valves and regulators are designed so that the valve handle or regulator adjusting handle may be inadvertently ejected with considerable force. These valves

shall be safety locked and the regulators reworked to prevent expulsion of the handles.

i. Back-pressure and relief valve regulators.

(1) Several back-pressure and relief-type regulators are difficult to distinguish from the pressure reducing type regulator. A possible hazard to personnel may result from the misuse of these regulators. Back-pressure regulators should never be installed in a closed system, but should be installed as relief valves vented to the atmosphere.

(2) The back-pressure and relief valve type regulators shall be identified with a one-inch wide band of brilliant red paint around the handwheel.

j. General materials:

(1) All materials shall be inspected for compatibility with service fluid and for suitability at service temperature.

(2) Upon inspection of parts after disassembly, if any of the above mentioned conditions are not met or a part is damaged or defective, it may be considered cause for rejection.

1-721. CLEANING. System cleanliness must be adhered to. Using agencies will determine the appropriate cleaning solution or solvents using manufacturer's recommendations, and technical order requirement. When guidance is not given, solvents PD-680 Type III and isopropyl alcohol may be used as standard cleaning solvents, along with several synthetic detergents and environmentally safe cleaning solutions.

WARNING

- Use of compressed air can create an environment of propelled particles. Do not direct air streams towards self or other personnel. Air pressure shall be reduced to less than 30 psig with personal protective equipment utilized.
- Some cleaners and chemicals have adverse effects on skin, eyes, and respiratory tract. Use cleaners in a well ventilated area along with face shield, apron and rubber gloves for personal protection equipment.

a. Clean component part before assembly or installation of seals and gaskets.

b. Flush system and parts to remove all cleaning solutions/solvents residue.

c. Air dry or use compressed air, regulated less than 30 psig, to prevent system contamination.

d. Protect from contaminants until system and component parts are utilized. Use dust caps or proper packaging to ensure system cleanliness.

1-722. LUBRICATION. All moving parts of the valves and components requiring lubrication shall be with an approved lubricant.

1-723. REASSEMBLY. The valve or component shall be reassembled and prepared for an operational test following rework, cleaning, and lubrication.

1-724. PACKAGING. After completion of testing and cleaning, all ports or openings are to be covered with a sheet of polyethylene film (approximately 0.008-inch thick) that will completely cover reverse side of flanges, flange faces, external threads, or sealing surfaces. The polyethylene sheet is to be secured and covered with a pressure-adhesive tape so that the ports are completely closed from the atmosphere and all threads, flange facings, and sealing surfaces are protected. The adhesive on the tape should not directly contact any threads *or* sealing surfaces. The adhesive tape shall be waterproof or water-resistant type tape.

NOTE

Clean plastic-or-aluminum-threaded type plugs may be used for pipe or tube connections.

1-725. DIAL PRESSURE GAUGES.

1-726. PRECAUTIONS. Large numbers of pressure gauges employ glass or plastic faces and must be considered potentially hazardous in the event of bourdon rupture. Shattering faces can be expelled with sufficient force to cause serious injury and personnel must not minimize this fact. Wherever possible, safe design gauges should be used, but personnel must not assume upon the presence of such a gauge. In essence, personnel must be aware of the fact that no pressurized device can be considered totally hazard free and they must conduct themselves accordingly.

NOTE

Safe-front gages are exempted from this procedure.

1-727. Pressure gages required of a gaseous or liquid fluid system will have a manual shutoff valve installed in the pressure takeoff line to the gage and be positioned as close as possible to the gage. This will facilitate quick shutoff of the pressure gage for replacement, recalibration, or blowout and loss of system fluid.

1-728. INSPECTION OF SYSTEM ON COMPLETION OF INSTALLATION.

1-729. VISUAL EXAMINATION.

1-730. The entire high-pressure system shall be examined visually to ascertain the adequacy of support, proper routing, and identification; the quality of welds and pipe fitting; and workmanship in general before the system is pressurized. Any evidence of damage or inadequacy of the system shall be sufficient reason to delay pressurization until the damage or inadequacy is repaired.

1-731. RADIOGRAPHIC INSPECTION.

1-732. The use of welding as a reliable means of fabricating transfer systems and assemblies has become widely accepted. However, the assurance and maintenance of high-quality standards for welding is dependent upon suitable nondestructive testing methods of detecting imperfections. In the past, the integrity of a welded piping system was tested only by a proof-pressure hydrostat. There are several deficiences in this test, if used alone. It cannot detect flaws such as internal cracks, excessive porosity, lack of fusion, and lack of penetration, which tend to cause failure with age and usage. It only proves the current integrity of the system, not what its capability should be in the future. The requirements for very high pressures and flow rates has placed exacting demands on materials and methods available to handle them. The welding has to be the highest quality to achieve reliable and safe operations.

1-733. All weld joints on pneumatic and hydraulic systems of 2,500 psig operating pressure and over shall be 100 percent radiographed and approved before being placed in service except as follows:

NOTE

Fillet welds in some configurations will not radiograph. These may be waived by the inspector only, and then only when other appropriate tests are performed. Use of socket weld fittings should be discouraged wherever possible because the configuration does not permit cleaning to liquid oxygen cleaning standards, and they are difficult to radiograph.

a. Welded systems for very high flow rates, cryogenic service, dangerous propellants, or any special environmental testing are many times very critical, and radiographic inspection

should be strongly considered as a requirement by engineering personnel in their design and construction, if reliability and safety are to be achieved.

b. Rocket and missile components will be radiographed as required by technical order and/or manufacturer's requirements.

c. Vessels built to ASME requirements will be radiographed in accordance with the ASME Unfired Pressure Vessel Code, section VIII.

d. Locally designed and/or fabricated vessels built to special requirements for 2,500 psig and over operating pressure or for toxic propellant use at any pressure above atmospheric will be 100 percent radiographed and approved before being placed in service.

1-734. MARKING OF WELDS.

1-735. All welds radiographed and approved will be marked by a metal marking stamp or etching stamp with the legend XR.

1-736. APPLICATION OF STAMPS.

1-737. Stamps will be issued and controlled by supervisors in the welding group.

1-738. The metal stamp impression will be lightly but marked on the weld. Marking adjacent to the weld is not acceptable. Caution against deep impressions should be exercised.

1-739. The etched stamp impression may be used on thin gage or very critical structure. The etch will normally appear on the weld; however, adjacent marking may be used when necessary.

1-740. PERIODIC INSPECTION AND MAINTENANCE OF SYSTEMS AND COMPONENTS.

WARNING

All personnel shall become familiar with the need and proper usage for this tag, in order to maintain the highest health and safety practices. All removed parts from hazardous systems will be tagged with Danger Tag, AF Form 1492. Safety Requirements make it mandatory that all material removed from systems be tagged to identify the type propellant and hazard involved. Cryogenic or other high pressure sampling ports shall be protected by irradiated polyethylene bags, polyethylene, teflon or other suitable plastic caps designed to blow off or release pressure at approximately 10 psig. Metal caps shall not be used.

1-741. Operating parts or assemblies, such as valves, filters, and transducers, used in propellant systems inherently entrap propellants. Decontamination of the system may not thoroughly clean all areas. Disassembly of contaminated components can cause serious injury to personnel not made aware of the possible presence of dangerous propellants. If an operating part from a hazardous propellant system is to be moved from the immediate area, or if the system is not to be reassembled the same day, a warning tag shall be attached to the part. Simple nonoperating parts, such as fittings, tubings, orifices, and gaskets, need not be tagged if the parts are completely flushed, cleaned and/or decontaminated. If such parts cannot be satisfactorily treated, or if there is reasonable doubt concerning the extent of decontamination, the parts shall be tagged.

1-742. PRESSURE VESSELS.

1-743. ASME OR STATE CODE PRESSURE VESSELS. These vessels shall be visually examined externally on an annual basis. External damage and evidence of corrosion shall be particularly of interest. The vessel shall be equipped with adequate relief devices, properly identified, and in general good condition.

1-744. ICC CODE CYLINDERS. These cylinders shall be examined whenever handled to see that the five-year test period has not expired and that the cylinder has not been damaged in shipment. The overdue date on the cylinder is five years from the latest date stamped on the neck of the cylinder.

1-745. VALVES AND REGULATORS.

1-746. Valves and regulators in critical areas shall be inspected periodically for excessive wear and leakage. The period of inspection depends

on the type of equipment and the service conditions; however, it is good practice to check each critical item at least every six months and the other items annually.

1-747. FLEX HOSES.

1-748. All new hose shall be hydrostatically tested when manufactured. Hoses which have reached their storage shelf life shall be handled in accordance with 00-20K series technical orders. All aircraft and missile hose used within their designed pressure limitations and intended environment are not subject to a periodic hydrostatic retest, unless called for by the system technical orders. All AGE and facility servicing hoses shall be hydrostatically tested if serviceability appears questionable. Shop or section supervisor will determine the need for hydrostatic testing of AGE and facility servicing hoses. Normally, underrated hoses shall not be used; however, hoses that by requirement are used in excess of their maximum design pressure shall be rehydrostatically tested annually. (Refer to paragraph 1-261).

1-749. All hoses specified in paragraph 1-750 shall be inspected annually and those specified for annual rehydrostatic test shall be hydrostatically tested at 1-1/2 times the maximum allowable working pressure.

1-750. Before hoses can be considered unsatisfactory for use, the following factors will have to be considered:

a. Cracking. Circumferential or longitudinal cracking of the outer cover in itself is not considered detrimental to the proper functioning of the hose; however, cracks of long standing may allow serious deterioration of inner layers of the hose. Cracking or checking of the inner liner is cause for condemnation.

b. Blistering. Blistering of the outer cover is usually indicative of porosity of the inner liner. If this be the case, pricking the outer cover periodically along its length will remedy th situation and is not considered detrimental.

c. Flatness. Small deformations or flattened areas are not detrimental. However, flattened areas over three inches in length will be removed or the hose condemned.

d. Age. Normal storage life **of high-**pressure hoses is called out in TO 00-20K-6. Any over-age **hose shall** be closely inspected and the **item** shall be approved by cognizant **en-**gineering personnel prior to use. If any deterioration is detected, the hose will be condemned.

1-751. If the hose leaks of bleeds excessively, it will be condemned. Blistering may be caused by gas or liquid passing through the liner **or** around the fittings, requiring fitting replacement. If the wire braid has become corroded, it will be condemned.

1-752. End fittings may be reused if a thorough inspection is made to determine serviceability of the parts. If the fittings are worn, deeply scored, or scratched, or if they are badly corroded, they will be condemned.

1-753. B nuts on hose and tube fittings should be retorqued at periodic intervals. It has been found that nuts can require as much as 14 degrees additional tightening in 360 hours.

1-754. INSPECTION OF NUTS. Tubing B nuts, flange bolting nuts and hose fitting nuts used on operational weapon support systems shall have torque paint, sealant or putty suitably applied to the nut as a visual aid to detecting loosening or tampering with joint.

1-755. Torque paint and/or putty shall be removed before changing the nut position by tightening or removing.

1-756. PRESSURE GAGES.

1-757. All pressure gages shall be checked **as** indicated in figure 1-104.

1-758. RELIEF VALVES AND RUPTURE DISKS.

1-759. RELIEF VALVES. Relief **valves shall be** inspected and reset annually unless **expected**

by weapons system manager and cognizant safety personnel. All relief valves shall be marked in some manner with the ASME code stamp and shall include the following information:

a. Name or identification trade mark of manufacturer.

b. Manufacturer's design or type number.

c. Size . . . . . .-inch.

d. Set pressure . . . . . .psig.

e. Capacity . . . . pounds of saturated steam per hour, or.. . . cubic feet of air (60° F (16° C) and 14.7 psia) per minute.

f. Use fluid . . . . . .

g. Next inspection date . . . . . .

1-760. RUPTURE DISKS. All rupture disks shall be identified with the following:

a. Name or identification trade mark of manufacturer.

b. Manufacturer's design or type number and lot number.

c. Size . . . . . .-inch.

d. Maximum bursting pressure . .psig.

e. Minimum bursting pressure . . .psig.

f. Coincident disk temperature . . . .°F.

g. Capacity . . . . pounds of saturated steam per hour, or. . . . cubic feet of air (60° F (16° C) and 14.7 psia) per minute.

1-761. TROUBLESHOOTING SYSTEM LEAKS.

1-762. Refer to figure 1-105 for troubleshooting pipe and fitting leaks.

1-763. It is common practice to leak test flange joints by carefully wrapping and sealing the joint with tape, punching a small hole in the tape and applying leak test solution to the hole. Any bubbling thus indicates leakage at the flange joint. Pressure sensitive masking tape (Federal Specification UU-T-106) or cloth backed pressure sensitive tapes (Federal Specification PPP-T-60) of either the waterproof or water-vapor resistant types may be used. Since LOX compatibility is not a primary problem, even if some LOX should drip or spill on the tape, it may be left on the joint as an aid to cleanliness or future leaktests. Care should be exercised that oils and other foreign material do not collect inside the tape joint.

Inspection Requirements	
Calibration Standards	
Calibration	6 months
Maintenance	12 months
Overhaul	48 months
Measuring Gages One Percent Accuracy	
Calibration	12 months
Maintenance	12 months
Overhaul	48 months
Indicator Gages Five Percent Accuracy	
Calibration and Maintenance	two point check by technicians as required

Figure 1-104. Pressure Gage Inspection

TROUBLE	CAUSE	CORRECTION
Leak of pipe thread joint.	Damaged threads.	Rethread or replace pipe or fittings.
	Sealing compound not properly applied or wrong compound used.	Clean threads with solvent and apply correct compound to male threads only.
	Joint not made up properly.	Recut threads to correct length for normal engagement.
Leaks at straight threaded joints using synthetic rubber gasket.	Wrong size or type of gasket.	Replace with correct gasket.
	Improper positioning of gasket.	Set gasket into gasket groove.
	Insufficient torque.	Tighten to specification (TO 1-1A-8).
	Scratched or nicked gasket.	Replace with new gasket.
Leaks of flared tube joints.	Defective flare (scratched, cracked, or distorted by overtorquing).	Cut off old flare and reflare, or replace tubing.
	Foreign matter under flare.	Clean flare and fitting nose.
	Cracked B-nut.	Replace B-nut.
Leaks at flareless tube joints.	Insufficient bit.	Tighten to specification (TO 1-1A-8, page 13-30, paragraphs 13-59 through 13-61.)
	Tube out of round or scratched.	Cut off end of tubing and reassemble.

Figure 1-105. Troubleshooting Pipe and Fitting Leaks

1-764. TUBING AND PIPING DAMAGE.

1-765. Nicked or scratched tubing and piping is weaker as to internal pressure because of the notch effect. If nicks and scratches are not removed by burnishing or other means, consequent stress concentration under vibration and working will cause weakening at the nicked point. Damage such as nicks, scratches and dents can be minimized by careful handling. Nicks, scratches and dents in aluminum, aluminum alloy, copper, steel or stainless steel tubing or piping carrying pressures in excess of 100 psi shall be treated as follows:

a. Nicks and scratches in tubing no deeper than 15 percent of the wall thickness may be burnished out with hand tools. Tubing with nicks and scratches in excess of 15 percent of the wall thickness shall be rejected. Dents less than 20 percent of the tubing diameter are not objectionable unless at the heel of a short radius bend. Tubing with dents in excess of 20 percent of the tubing diameter shall be rejected.

b. Piping. Nicks and scratches in piping less than 0.010 inch deep are not objectionable. Nicks and scratches in piping no deeper than 15 percent of the nominal wall thickness may be burnished or ground out. Nicks and scratches in piping in excess of 15 percent of the nominal wall thickness but not over 25 percent of the nominal wall thickness may be repaired by filling in by an approved welding technique, provided adequate purging and safety measures and scratches in excess of 25 per-

cent of the nominal wall thickness shall be rejected. Dents less than 20 percent of the nominal pipe diameter are not objectionable. Piping with dents in excess of 20 percent of the nominal pipe diameter shall be rejected.

c. Bellows. Should bellows be damaged in any way, the cognizant engineering officer or weapon system project officer shall be immediately notified and shall rule on retention or condemnation of the bellows.

d. Method of Measuring. Defects can be measured by use of a sharp pointed dial indicator or a Hilger and Watts optical scratch investigation microscope, or a depth of micrometer.

1-766. Technically, tubing size is called out by actual outside diameter dimension and piping size is called out by a nominal diameter dimension. Tubing is usually considered thin walled and piping heavy walled. However, wall thickness and dimensions of tubing and piping overlap greatly. Therefore, for the purpose of evaluating damage, wall thicknesses up to and including 0.10 inch will be considered as tubing and wall thicknesses in excess of 0.10 inch will be considered as piping.

CHAPTER 1

SECTION VIII

OPERATION

1-767. TRAINING AND QUALIFICATIONS.

1-768. GENERAL.

1.769 Caution and common sense will do much to prevent serious accidents. Safety personnel shall take necessary steps to insure the preparation of standard operating procedures to be certain that personnel assigned to pressure system duties have been properly trained and work only under qualified supervision.

1-770. QUALIFICATIONS.

1-771. Only properly trained personnel should handle combustible fluids and operate high-pressure systems. Operating personnel shall be trained in accordance with Air Force regulations and specifications and shall be thoroughly familiar with the following:

a. Properties of the service fluid.
b. Operation of the high-pressure system.
c. Operation and use of safety equipment.
d. Fire and spill prevention techniques.
e. Fire and spill control measures.

NOTE

No one should be allowed to operate a high-pressure system unless he is thoroughly familiar with the above-listed items and is also confident that the service fluid can be safely handled with the equipment and facilities available.

1-772. TRAINING.

1-773. Each operator shall have satisfactorily completed training courses for the various service fluids required in the area. Generally, each course shall cover the following material:

a. General Description. A short description, including color, odor, state, and activity of service fluid.

b. Physical Properties. A list including the boiling point, freezing point, density, vapor pressure, flammability limits (where applicable), viscosity, and other pertinent properties.

c. Materials Compatibility. A list of suitable materials, including metals, nonmetals, lubricants, and methods of preparation of materials.

d. Health Hazards and Protection. A list of the hazards, including toxicity, exposure to the extreme cold, danger of asphyxiation or exposure to corrosive fluids, and the protective equipment required.

e. Fire Hazards and Protection. A list of the degree of danger involved (where applicable) and the safety precautions required.

f. Explosion Hazard and Protection. The explosive hazard of the service fluid (where applicable) with other fluids or construction materials shall be assessed and the means of protection listed. The energy level of the high-pressure system itself should also be explained as well as suitable barricading.

g. Storage. Storage containers and methods of storage for the service fluid should be discussed.

h. Handling. Transfer and preparation of the high-pressure system for the service fluid should be covered. This includes all the items necessary to safely operate a system.

i. Transportation. Standard safe methods of transporting the service fluid should be covered.

NOTE

A useful guide and reference in handling propellants is AFM 160-39 "The Handling and Storage of Liquid Propellants," Office of the Director of Defense Research and Engineering, Washington 25, D.C., March 1961.

1-774. TRAINING AIDS.

1-775. In training personnel to safely operate high-pressure systems, the use of training aids is extremely helpful. The operator can better understand and treat his system if he knows how the various components are constructed. Cutaways, as shown in figure 1-105 are particularly useful as training aids.

1-776. A line diagram of the entire high-pressure system should be used to familiarize operating personnel with the complete operation of the system. The line diagram with the brief list of valve or other control positioning for each operation required should be posted at the area of operation as well as used during the training course.

1-777. Demonstrations are highly effective as training aids. The demonstration of the energy release from small amounts of liquid oxygen and RP-type fuels mixed and ignited or impacted leaves no doubt in the trainee's mind as to the energy level.

1-778. PERSONNEL PROTECTIVE EQUIPMENT.

1-779. CLOTHING OR EQUIPMENT.

1-780. Personnel who have satisfactorily completed the training courses for the various service fluids are aware of the type of protective equipment required and the proper utilization of this equipment. The completeness of the protective equipment depends largely on the type of service fluid and the type of operation involved.

1-781. Ordinarily a skull guard and goggles or face shield only are required where toxicity, corrosiveness, and extreme cold are not factors for ordinary operation. On tank cleaning and other jobs where confinement may result in asphyxiation, breathing equipment, safety lines, and rigid controls are required. The atmosphere around toxic and/or combustible fluid systems shall be monitored for toxic and/or combustible vapors. Refer to figure 1-107 for a list of several commercially available vapor detectors.

1-782. Each area should be adequately supplied with protective equipment for the service fluids common to that area. Additional service fluids shall not be introduced until it is known that the existing equipment is adequate or until new equipment has been procured. Refer to figure 1-108 for a list of safety equipment applicable to pressure systems.

1-783. BARRICADING.

1-784. Proof testing of components shall be conducted in barricaded test cells or at a distance so that blast or shrapnel are not serious hazards. Each barricade or test cell shall be rated for an energy level. This may be in foot-pounds, pounds of TNT, or any other convenient energy term. Knowing the approximate internal volume and the test pressure, cognizant safety personnel shall approve the barricade or cell before use.

1-785. SYSTEM CHECKOUT.

1-786 PRESSURE CHECKS AND BARRICADES.

1-787. Where equipment of a questionable nature is concerned, testing shall be from behind a barricade or at a distance sufficient to prevent injury to personnel.

1-788. CHECKOUT EQUIPMENT FLUIDS.

1-789. Unless specifically prohibited by safety personnel, inhibited water, as specified in section VI, shall be used. When the system is such that it will not support or cannot be contaminated with test liquid, dry gaseous nitrogen may be used on approval from cognizant safety personnel and with proper precautions.

1-790. CLEANLINESS.

1-791. Where liquids are used as the test media, they shall be passed through a 40-micron nominal opening filter. Nitrogen or other approved gases shall be filtered through a filter of 10-micron nominal openings. The nitrogen gas shall be dry and free of oil or other contaminants. In order to maintain system cleanliness, filters should

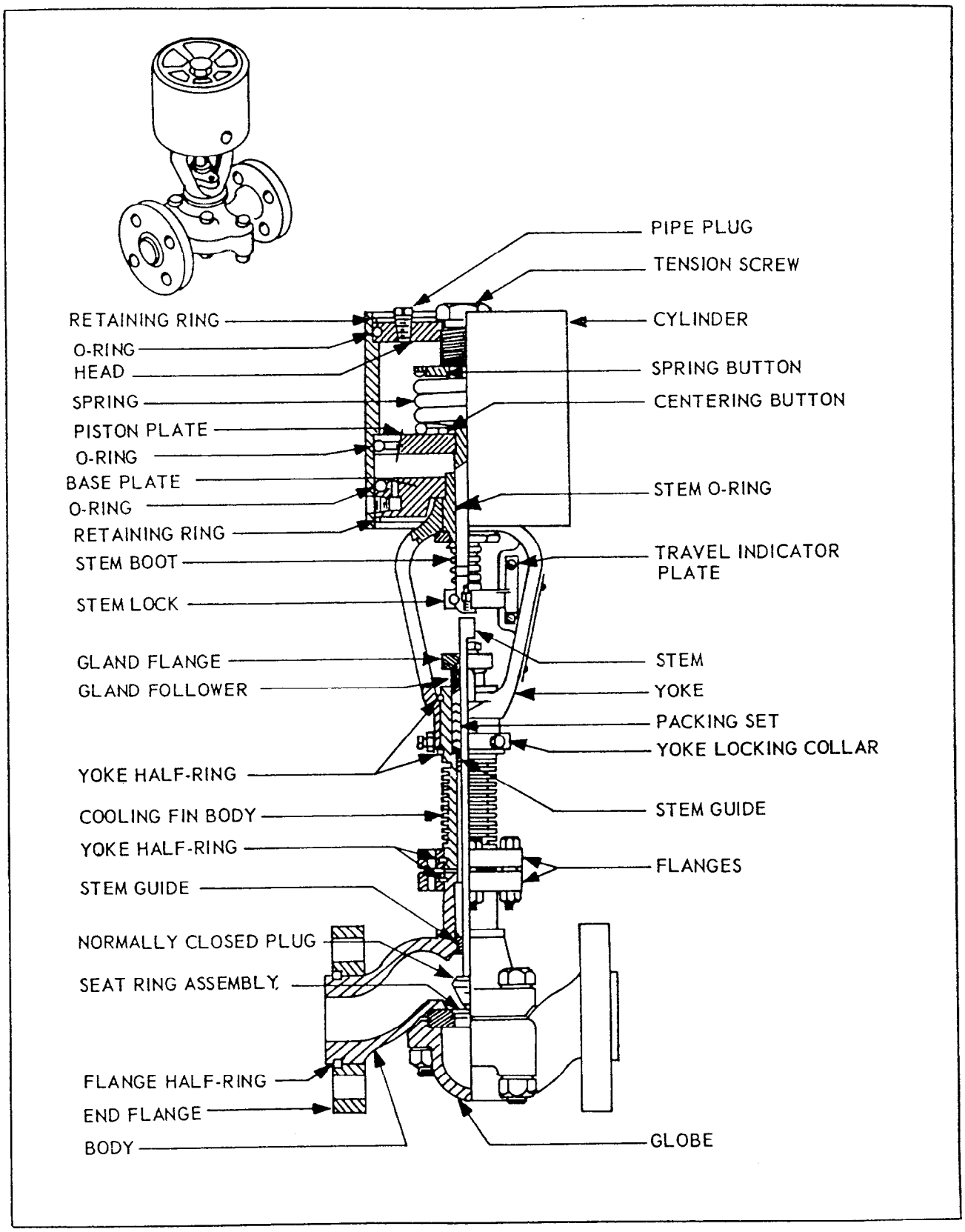

Figure 1-106. Electropneumatic Control Valve

DETECTOR	MODEL NO.	MANUFACTURER
Portable propellant olfactron	4060	American Systems, Inc.
Stationary fuel olfactron	4070M	American Systems, Inc.
Stationary oxidizer olfactron	4075M	American Systems, Inc.
Portable vapor calibration kit (Used to calibrate above olfactrons)	4090	American Systems, Inc.
Vapotester (portable)	M-6	Davis Instruments
Kitagawa precision gas detector (portable)	UNICO 400	Shiro Scientific Instruments
Multigas detector (portable)	19/31	Drager

Figure 1-107. Portable and Stationary Vapor Detectors

be tested for proper filtration prior to introduction of gases or liquids into the system, and filter elements should be monitored at frequent intervals.

1-792. COMPATIBILITY OF TEST MEDIA.

1-793. Only those fluids compatible with the service fluid shall be utilized for test purposes unless the system is specifically cleaned after the checkout. This is a difficult operation and should be avoided whenever possible.

1-794. QUALIFICATIONS OF SYSTEM CHECK-LIST.

1-795. Before a system is qualified for the service fluid, it as well as the area must be checked for the following:

a. Valves, piping, and equipment are of approved type and are in good operating condition.

b. The system has been proof tested.

c. The system has been leak checked.

d. The system is equipped with vent-and-relief devices.

e. Relief-and-vent ducts are directed away from work areas.

f. Provisions have been made for expansion and contraction.

g. Ducts and lines are color coded.

h. Pressure gages are of approved type and have been calibrated.

i. Firefighting equipment is available and in good working order.

j. The electropneumatic system is adequately protected with fail-safe provisions.

k. Safety showers, eyewashes, and other safety equipment are located for easy accessibility.

l. Instructions are posted for handling of hazardous chemicals.

1-796. TEST PROCEDURES.

1-797. Some test procedures cannot be overemphasized. These are generally broken down into the steps required for pre-test, test, and post-test operations.

1-798. PRE-TEST.

1-799. This procedure should cover the electropneumatic tests and other tests neces-

EQUIPMENT	FEDERAL STOCK NUMBER
Gloves, cloth, coated, MIL-G-82253, Type I	8415-916-2817
Gloves, cloth, Fed Spec. HH-G-450, Type I, Class 2	8415-261-7015
Boots, Fireman, MIL-B-2885	8430-753-5935*
Boots, Polyvinyl Chloride	8430-753-5966
Goggles, all Acid	4246-203-3810
Face Shield, Skull Protector	4240-542-2048
Coveralls, Rocket Fuel Handlers MIL-C-43063	8415-725-3627*
Breathing Apparatus, Self-Contained	4240-216-6826
Respirator, Air Supply, Type A, Class 2	4240-270-4399
Apron, Impermeable, MIL-A-41829	8415-082-6108
Coveralls, Explosives Handlers, MIL-C-14610	8415-577-4063*
NOTE: Indicates series	

Figure 1-108. Safety Equipment

sary to ensure the satisfactory operation of all valves and control items before the service fluid is introduced.

1-800. TEST.

1-801. This procedure should cover the transfer of service fluids and the actual conduction of tests.

1-802. POST-TEST.

1-803. This procedure should include all details necessary to drain the service fluid and place the system in a safe condition.

1-804. WELDING ON HIGH-PRESSURE SYSTEMS.

1-805. GENERAL REGULATIONS.

CAUTION

Welding operations may weaken the metal surrounding the weld.

1-806. The following general regulations apply to welding and cutting operations on any high-pressure system.

a. Welding will not be permitted when fuel or oxidizer leaks or spillage are present anywhere in the immediate area.

b. Welding will not be permitted and personnel will not be allowed in any area where an unsafe condition exists.

C. When welding is performed on a high-pressure system, the area immediately above, and all areas near or below the operation, shall be protected from sparks or hot objects.

d. The welder shall not begin work until a fireman has completed an inspection (in conjunction with the responsible engineer), the fireman has signed the welding or cutting permit, and, when necessary, the fire department personnel are standing by.

1-807. The following types of manual welding operations must be performed only by qualified welding operators who have been qualified in accordance with instructions in TO. 00-25-224.

a. Welding for any development contractor.

b. Welding on any pressure piping.

c. Welding on any cryogenic or toxic propellant piping system.

d. Welding on any unfired pressure vessels, or pressure containers.

e. Welding on any missile or rocket engine components.

f. Welding on any primary test stand structural members or thrust mounts.

1-808. WELDING OR CUTTING PROCEDURE.

1-809. The general regulations are applicable in all cases.

1-810. LEAKAGE. The entire system shall be inspected for combustible fluid leaks and open lines. All leaks must be stopped, spillage completely flushed away, and open lines capped when leakage could possibly occur from these lines. The fireman and leadman welder should accompany the test engineer during this inspection.

1-811. FLAME DEFLECTOR. Before any welding is started, the flame deflector must be drained, where possible, and completely flushed to remove fuel and vapors. The flame deflector spillway, within 50 feet of the stand, must then be flushed to remove all residual fuel and debris.

1-812. TUBING, PIPING AND/OR HAZARDOUS FLUID SYSTEM COMPONENTS. When welding is to be performed within six feet of tubing, piping or components containing hazardous fluids, the tubing, piping or components shall be removed or the lines drained, flushed and purged before welding begins. A non-conducting fireproof shield shall be used to protect adjacent tubing, piping or components during welding operations. In situations where system drainage, flushing and purging procedures are not feasible because of system configuration and/or operational requirements, the following procedure will be complied with:

a. Remove pressure from lines or system within six feet of the welding or cutting operation.

b. Cover the components within the six foot work area with protective blanketing.

c. Provide necessary firewatch so immediate termination of the operation can be effected should the need arise.

Table 1-1. Characteristic Advantages and Limitations of the Fourteen Families of Elastomers

	1	2	3	4	5	6	7
COMMON NAME	NR NATURAL RUBBER	IR SYNTHETIC RUBBER	SBR	IIR BUTYL	BR POLYBUTADIENE	EPR EP RUBBER	CR NEOPRENE
CHEMICAL TYPE	NATURAL POLYISOPRENE	SYNTHETIC POLYISOPRENE	STYRENE BUTADIENE	ISOBUTYLENE ISOPRENE	POLYBUTADIENE	ETHYLENE PROPYLENE	CHLOROPRENE
ASTM-SAE DESIGNATION	TYPE R	TYPE R	TYPE R	TYPE R	TYPE R	TYPE R	SC
RELATIVE COST SBR=100	115	100	100	125	115	100	125
ADVANTAGES	Most used for high mechanical performance unless some specific environmental condition prohibits.		Resistant to heat aging abrasion impact.	Outstanding gas impermeability. Good damping at normal temp. Resists aging at high temp. Resistant to ozone, alcohol diester lubes.	High resistance. High resistance to oxidation, heat aging. Good low temp properties. Abrasion resistance.	Resistant to heat aging, oxidation, ozone, acids, alkalis, hydraulic fluids. Good electrical properties.	Resistant to weather, ozone, gasoline, oil, elevated temp. Flame resistant.
DISADVANTAGES	Affected by heat aging sunlight, oxygen, ozone gasoline and oil, aromatic hydrodarbons, degreaser solvents, silicate hydraulic fluids.		Affected by heat aging ozone, hydrocarbon solvents oils. Only fair electrical properties. Good physical properties require reinforcement.	Affected by gasoline, oil, degreaser solvents. Low resisience. Medium physical properties. Mediocre bonding.	Medium fensile strength.	Affected by aromatic and aliphatic solvents. Poor tear resistance.	Affected by aromatic hydrocarbons, phosphate, hydraulic fluids.

THE 14 FAMILIES OF ELASTOMERS

COL	COMMON NAME	CHEMICAL NAME	ASTM-SAE CLASSIFICATION
1 2 3 4 5 6	NR-Natural rubber IR-Synthetic rubber SBR IIR-Butyl rubber BR-Polybutadiene rubber FPR-FP rubber	Natural polyisoprene Synthetic polyisoprene Styrene butadiene Isobutylene isoprene Polybutadiene Ethylene propylene	R-no contact with petroleum-base fluids
7 8 9	CR-neoprene NBR Polysulfide	Polychloroprene Nitrite butadiene Polysulfide	SC-medium-oil rersistant SB-good oil resistance SA-excellent oil resistance
10	Polyurethane	Polyurethane dusocyanate	Non assigned yet
11 12 13 14	Silicone Hypulon Acrylics Fluoroelastomers	Polysiloxane Chlorosulfonated polyethylene Polyacrylic Fluorinated hydrocarbon	TA-Broad temp range TB-Resistance to elevated temp and solvents

Table 1-1. Characteristic Advantages and Limitations of the Fourteen Families of Elastomers - Continued

	8	9	10	11	12	13	14
COMMON NAME	NBR	POLYSULFIDE	POLYURETHANE	SILICONE	HYPALON	ACRYLICS	FLUORO ELASTOMERS
CHEMICAL TYPE	NITRILE BUTADIENE	POLYSULFIDE	POLYURETHANE DUSOCYAMATE	POLYSILOXANE	CHLOROSULFONATED POLYETHYLENE	POLYACRYLIC	FLUORINATED HYDROCARBON
ASTM-SAE DESIGNATION	SB	SA	--	TA	TYPE TB	TYPE TB	TYPE TB
RELATIVE COST SBR=100	140	250	500	1000	170	400	3000
ADVANTAGES	Good physicals. Resistant in gasoline, oil, acohol, abrasion.	Excellent resistance to most solvents. Retains physicals when immersed.	Highest available abrasion resistance, strength and load bearing. High elongation, hardness. Resistant to oxygen, ozone.	Broadest available temp range. Retain properties over temp range. Resistant to aging, ozone, oil. Good flex resistance.	Outstanding resistance to ozone, weather abrasion. Flame resistant. Color stability.	Resistant to oxygen, ozone, heat gasoline, oil.	Outstanding resistance to oxygen, ozone, most solvents. Retains properties for long exposure to high temp. Flame resistant. Low permeability.
DISADVANTAGES	Affected by degreaser solvents. Good physicals require reinforcement.	Relatively poor physical properties. Objectionable odor.	Affected by acid, alkalis, aromatics, ethers, esters. Good performance only with high hardness.	Low physical properties at room temp. Affected by gasoline, oil, degreaser solvents.	Affected by degreaser solvents.	Low physical properties. Affected by some solvents. Stiff at low temp.	Poor dynamic properties at low temp.

THE 14 FAMILIES OF ELASTOMERS

COL	COMMON NAME	CHEMICAL NAME	ASTM-SAE CLASSIFICATION
1 2 3 4 5 6	NR-Natural rubber IR-Synthetic rubber SBR IIR-Butyl rubber BR-Polybutadiene rubber FPR-FP rubber	Natural polyisoprene Synthetic polyisoprene Styrene butadiene Isobutylene isoprene Polybutadiene Ethylene propylene	R-no contact with petroleum-base fluids
7 8 9	CR-Neoprene NBR Polysulfide	Polychloroprene Nitrite butadiene Polysulfide	SC-medium-oil rersistant SB-good oil resistance SA-excellent oil resistance
10	Polyurethane	Polyurethane dusocyanate	Non assigned yet
11 12 13 14	Silicone Hypulon Acrylics Fluoroelastomers	Polysiloxane Chlorosulfonated polyethylene Polyacrylic Fluorinated hydrocarbon	TA-Broad temp range TB-Resistance to elevated temp and solvents

Table 1-2. Physical Properties and Relative Performance for the Fourteen Types of Elastomers

Ratings are in this decreasing order: OUTSTANDING, EXCELLENT, GOOD, FAIR, POOR				1	2	3	4
COMMON NAME				NATURAL RUBBER	SYNTHETIC RUBBER	SBR	BUTYL
WEIGHT OF BASE ELASTOMER			LB/CU IN	0 033	0 033	0 034	0 033
			SPEC. GR	0 93	0 93	0 94	0 92
PHYSICAL PROPERTIES FOR ELASTICIMIR COMPOUNDS		DUROMETER, RANGE		30 100	40 80	40 100	30 100
		RESILIENCE		OUTSTANDING	OUTSTANDING	GOOD	FAIR
		TENSILE STRENGTH, PSI (REINFORCED)		4000	2000 3000	2000	2000
		ELONGATION, % (REINFORCED)		500	300 700	450	300 800
		DRIFT, ROOM TEMP		EXCELLENT	GOOD	EXCELLENT	FAIR
		COMPRESSION SET		GOOD	FAIR	GOOD	FAIR
		ELECTRICAL RESISTIVITY		EXCELLENT	EXCELLENT	EXCELLENT	EXCELLENT
		IMPERMEABILITY, GAS		GOOD	GOOD	FAIR	OUTSTANDING
RESISTANCE PROPERTIES	MECHANICAL	RESISTANCE TO	IMPACT	EXCELLENT	EXCELLENT	EXCELLENT	GOOD
			ABRASION	EXCELLENT	EXCELLENT	EXCELLENT	GOOD
			TEAR	EXCELLENT	GOOD	FAIR	GOOD
			CUT GROWTH	EXCELLENT	EXCELLENT	GOOD	EXCELLENT
	TEMPERATURE	TENSILE STRENGTH, PSI, AT	250 F	1800	1800	1200	1000
			400 F	125	125	170	350
		ELONGATION, %, AT	250 F	500	500	250	250
			400 F	80	80	60	80
		DRIFT AT 212 F		GOOD	GOOD	GOOD	FAIR
		HEAT AGING AT 212 F		GOOD	FAIR	GOOD	EXCELLENT
		FLAME RESISTANCE		POOR	POOR	POOR	POOR
		LOW TEMPERATURE	STIFFENING, F	-20 TO -50	-20 TO -50	0 TO -50	10 TO 40
			BRITTLE POINT, F	-80	-80	80	-80
	ENVIRONMENTAL	WEATHER		FAIR	FAIR	FAIR	EXCELLENT
		OXIDATION		GOOD	EXCELLENT	GOOD	EXCELLENT
		OZONE		POOR	POOR	POOR	EXCELLENT
		RADIATION		FAIR TO GOOD	FAIR TO GOOD	GOOD	POOR
		WATER		EXCELLENT	EXCELLENT	EXCELLENT	EXCELLENT
		ACID		FAIR TO GOOD	FAIR TO GOOD	FAIR TO GOOD	EXCELLENT
		ALKALI		FAIR TO GOOD	FAIR TO GOOD	FAIR TO GOOD	EXCELLENT
		GASOLINE, KEROSENE, ETC (ALIPHATIC HYDROCARBONS)		POOR	POOR	POOR	POOR
		BENZOL, TOLUOL, ETC (AROMATIC HYDROCARBONS)		POOR	POOR	POOR	FAIR TO GOOD
		DEGREASER SOLVENTS (HALOGENATED HYDROCARBONS)		POOR	POOR	POOR	POOR
		ALCOHOL		GOOD	GOOD	FAIR	EXCELLENT
		SYNTHETIC LUBRICANTS (DIESTER)		POOR TO FAIR	POOR TO FAIR	POOR	FAIR
		HYDRAULIC FLUIDS	SILICATES	POOR	POOR	POOR TO FAIR	FAIR
			PHOSPHATES	POOR TO FAIR	POOR TO FAIR	POOR	GOOD
SUBJECTIVE PROPERTIES		TASTE		FAIR TO GOOD	FAIR TO GOOD	FAIR TO GOOD	FAIR TO GOOD
		ODOR		FAIR TO GOOD	GOOD	GOOD	GOOD
		NONSTAINING		FAIR TO GOOD	EXCELLENT	POOR TO GOOD	GOOD
BONDING TO RIGID MATERIALS				EXCELLENT	EXCELLENT	EXCELLENT	FAIR TO EXCELLENT

Table 1-2. Physical Properties and Relative Performance for the Fourteen Types of Elastomers - Continued

Ratings are in this decreasing order: OUTSTANDING, EXCELLENT, GOOD, FAIR, POOR				5	6	7	8
COMMON NAME				POLYBUTADIENE	EP RUBBER	NEOPRENE	NBR
WEIGHT OF BASE ELASTOMER			LB/CU IN	0 034	0 031	0 044	0 036
			SPEC. GR	0 94	0 86	1 23	1 00
PHYSICAL PROPERTIES FOR ELASTICIMIR COMPOUNDS		DUROMETER, RANGE		45 80	30 90	40-95	20 90
		RESILIENCE		OUTSTANDING	GOOD	EXCELLENT	GOOD
		TENSILE STRENGTH, PSI (REINFORCED)		2500	2000 3000	3000	1000 3500
		ELONGATION, % (REINFORCED)		450	500	650 850	400 600
		DRIFT, ROOM TEMP		GOOD	FAIR	FAIR TO GOOD	GOOD
		COMPRESSION SET		FAIR	FAIR	FAIR TO GOOD	GOOD
		ELECTRICAL RESISTIVITY		EXCELLENT	EXCELLENT	FAIR	POOR
		IMPERMEABILITY, GAS		GOOD	GOOD	GOOD	GOOD
RESISTANCE PROPERTIES	MECHANICAL	RESISTANCE TO	IMPACT	GOOD	GOOD	GOOD	FAIR
			ABRASION	EXCELLENT	GOOD	GOOD TO EXCELLENT	EXCELLENT
			TEAR	GOOD	POOR	GOOD	GOOD
			CUT GROWTH	FAIR	GOOD	GOOD	GOOD
	TEMPERATURE	TENSILE STRENGTH, PSI, AT	250 F	1200	2000	1500	700
			400 F	170	400	180	130
		ELONGATION, %, AT	250 F	250	300 500	350	120
			400 F	60	0 120	0 100	20
		DRIFT AT 212 F		GOOD	FAIR	FAIR TO GOOD	EXCELLENT
		HEAT AGING AT 212 F		FAIR	EXCELLENT	GOOD	GOOD
		FLAME RESISTANCE		POOR	POOR	GOOD	POOR TO FAIR
		LOW TEMPERATURE	STIFFENING, F	30 TO 60	20 TO 50	10 TO 20	30 TO -20
			BRITTLE POINT, F	100	90	45	65
	ENVIRONMENTAL	WEATHER		FAIR	EXCELLENT	EXCELLENT	GOOD
		OXIDATION		EXCELLENT	GOOD	GOOD	FAIR TO GOOD
		OZONE		POOR	EXCELLENT	EXCELLENT	POOR
		RADIATION		POOR	POOR	FAIR TO GOOD	FAIR TO GOOD
		WATER		EXCELLENT	GOOD TO EXCELLENT	GOOD	EXCELLENT
		ACID		FAIR TO GOOD	GOOD TO EXCELLENT	GOOD	GOOD
		ALKALI		FAIR TO GOOD	GOOD TO EXCELLENT	GOOD	FAIR TO GOOD
		GASOLINE, KEROSENE, ETC (ALIPHATIC HYDROCARBONS)		POOR	POOR	GOOD	EXCELLENT
		BENZOL, TOLUOL, ETC (AROMATIC HYDROCARBONS)		POOR	FAIR	POOR	GOOD
		DEGREASER SOLVENTS (HALOGENATED HYDROCARBONS)		POOR	POOR	POOR	POOR
		ALCOHOL		FAIR TO GOOD	POOR	FAIR	EXCELLENT
		SYNTHETIC LUBRICANTS (DIESTER)		POOR TO FAIR	POOR TO FAIR	POOR	FAIR TO GOOD
		HYDRAULIC FLUIDS	SILICATES	POOR	FAIR TO GOOD	GOOD	FAIR
			PHOSPHATES	POOR TO FAIR	GOOD TO EXCELLENT	POOR	POOR
SUBJECTIVE PROPERTIES		TASTE		FAIR TO GOOD	GOOD	FAIR TO GOOD	FAIR TO GOOD
		ODOR		GOOD	GOOD	FAIR TO GOOD	GOOD
		NONSTAINING		GOOD	GOOD	GOOD TO EXCELLENT	POOR TO GOOD
BONDING TO RIGID MATERIALS				EXCELLENT	POOR	GOOD TO EXCELLENT	GOOD TO EXCELLENT

Table 1-2. Physical Properties and Relative Performance for the Fourteen Types of Elastomers - Continued

Ratings are in this decreasing order: OUTSTANDING, EXCELLENT, GOOD, FAIR, POOR				9	10	11	12
COMMON NAME				POLYSULFIDE	POLYURETHANE	SILICONE	HYPALON
WEIGHT OF BASE ELASTOMER			LB/CU IN	0 048	0 039	0 036	0 040
			SPEC. GR	1 34	1 05	0 95	1 10
PHYSICAL PROPERTIES FOR ELASTICIMIR COMPOUNDS		DUROMETER, RANGE		20 80	55 100	25 80	50 95
		RESILIENCE		FAIR	GOOD TO EXCELLENT	POOR TO EXCELLENT	GOOD
		TENSILE STRENGTH, PSI (REINFORCED)		500 1500	4000 8000	600 1500	1500 2500
		ELONGATION, % (REINFORCED)		200 550	250 800	90 800	250 500
		DRIFT, ROOM TEMP		POOR	GOOD TO EXCELLENT	FAIR TO EXCELLENT	FAIR
		COMPRESSION SET		POOR TO FAIR	EXCELLENT	GOOD TO EXCELLENT	FAIR TO GOOD
		ELECTRICAL RESISTIVITY		FAIR	GOOD	EXCELLENT	GOOD
		IMPERMEABILITY, GAS		EXCELLENT	GOOD	FAIR	EXCELLENT
RESISTANCE PROPERTIES	MECHANICAL	RESISTANCE TO	IMPACT	POOR	EXCELLENT	POOR TO FAIR	FAIR TO GOOD
			ABRASION	POOR TO FAIR	EXCELLENT	POOR TO GOOD	GOOD
			TEAR	POOR TO FAIR	EXCELLENT	POOR TO GOOD	FAIR TO GOOD
			CUT GROWTH	POOR	FAIR TO EXCELLENT	POOR TO GOOD	FAIR TO GOOD
	TEMPERATURE	TENSILE STRENGTH, PSI, AT	250 F	700	1800	850	500
			400 F	UNDER 25	200	400	200
		ELONGATION, %, AT	250 F	140	300	350	60
			400 F	UNDER 25	140	200	20
		DRIFT AT 212 F		POOR	EXCELLENT	EXCELLENT	FAIR
		HEAT AGING AT 212 F		GOOD	FAIR TO GOOD	EXCELLENT	EXCELLENT
		FLAME RESISTANCE		POOR	POOR TO FAIR	FAIR TO GOOD	GOOD
		LOW TEMPERATURE	STIFFENING, F	-10 TO 45	10 TO 30	60 TO 160	30 TO 50
			BRITTLE POINT, F	60	60	90 TO 180	60
	ENVIRONMENTAL	WEATHER		EXCELLENT	EXCELLENT	EXCELLENT	EXCELLENT
		OXIDATION		EXCELLENT	EXCELLENT	EXCELLENT	EXCELLENT
		OZONE		EXCELLENT	EXCELLENT	EXCELLENT	OUTSTANDING
		RADIATION		FAIR TO GOOD	GOOD	FAIR TO EXCELLENT	FAIR TO GOOD
		WATER		GOOD	GOOD	GOOD	GOOD
		ACID		FAIR	POOR TO FAIR	POOR TO GOOD	EXCELLENT
		ALKALI		GOOD	POOR TO FAIR	POOR TO FAIR	EXCELLENT
		GASOLINE, KEROSENE, ETC (ALIPHATIC HYDROCARBONS)		EXCELLENT	EXCELLENT	POOR TO FAIR	FAIR
		BENZOL, TOLUOL, ETC (AROMATIC HYDROCARBONS)		EXCELLENT	POOR TO FAIR	POOR	POOR TO FAIR
		DEGREASER SOLVENTS (HALOGENATED HYDROCARBONS)		FAIR TO GOOD	FAIR TO GOOD	POOR TO GOOD	POOR TO FAIR
		ALCOHOL		GOOD	GOOD	GOOD	GOOD
		SYNTHETIC LUBRICANTS (DIESTER)		GOOD	POOR	POOR TO FAIR	POOR
		HYDRAULIC FLUIDS	SILICATES	POOR TO FAIR		POOR	GOOD
			PHOSPHATES	POOR TO FAIR	POOR	GOOD	POOR TO FAIR
SUBJECTIVE PROPERTIES		TASTE		POOR TO FAIR	GOOD	GOOD	FAIR TO GOOD
		ODOR		POOR	GOOD	GOOD	GOOD
		NONSTAINING		POOR TO FAIR	GOOD	OUTSTANDING	EXCELLENT
BONDING TO RIGID MATERIALS				FAIR TO GOOD	FAIR TO GOOD	FAIR TO EXCELLENT	FAIR TO GOOD

Table 1-2. Physical Properties and Relative Performance for the Fourteen Types of Elastomers - Continued

Ratings are in this decreasing order: OUTSTANDING, EXCELLENT, GOOD, FAIR, POOR				13	14
COMMON NAME				ACRYLICS	FLUOROELASTOMERS
WEIGHT OF BASE ELASTOMER			LB/CU IN	0 040	0 05-0 07
			SPEC. GR	1 10	14 TO 195
PHYSICAL PROPERTIES FOR ELASTICIMIR COMPOUNDS		DUROMETER, RANGE		40 90	65 90
		RESILIENCE		GOOD	FAIR
		TENSILE STRENGTH, PSI (REINFORCED)		1700	1500 3000
		ELONGATION, % (REINFORCED)		450	100 450
		DRIFT, ROOM TEMP		FAIR	GOOD
		COMPRESSION SET		FAIR TO GOOD	GOOD TO EXCELLENT
		ELECTRICAL RESISTIVITY		FAIR	GOOD
		IMPERMEABILITY, GAS		GOOD	EXCELLENT
RESISTANCE PROPERTIES	MECHANICAL	RESISTANCE TO	IMPACT	POOR	POOR TO GOOD
			ABRASION	FAIR TO GOOD	GOOD
			TEAR	FAIR	POOR TO GOOD
			CUT GROWTH	GOOD	POOR TO GOOD
	TEMPERATURE	TENSILE STRENGTH, PSI, AT	250 F	1300	300 800
			400 F	225	150 300
		ELONGATION, %, AT	250 F	400	100 350
			400 F	150	50 160
		DRIFT AT 212 F		FAIR	GOOD TO EXCELLENT
		HEAT AGING AT 212 F		EXCELLENT	OUTSTANDING
		FLAME RESISTANCE		POOR TO FAIR	EXCELLENT
		LOW TEMPERATURE	STIFFENING, F	35 TO 10	20 TO 30
			BRITTLE POINT, F	10	10 TO 60
	ENVIRONMENTAL	WEATHER		EXCELLENT	EXCELLENT
		OXIDATION		EXCELLENT	OUTSTANDING
		OZONE		EXCELLENT	OUTSTANDING
		RADIATION		POOR TO GOOD	FAIR TO GOOD
		WATER		FAIR	GOOD
		ACID		FAIR	GOOD TO EXCELLENT
		ALKALI		POOR	POOR TO GOOD
		GASOLINE, KEROSENE, ETC (ALIPHATIC HYDROCARBONS)		EXCELLENT	EXCELLENT
		BENZOL, TOLUOL, ETC (AROMATIC HYDROCARBONS)		POOR	EXCELLENT
		DEGREASER SOLVENTS (HALOGENATED HYDROCARBONS)		POOR	GOOD
		ALCOHOL		POOR	EXCELLENT
		SYNTHETIC LUBRICANTS (DIESTER)		GOOD	FAIR TO GOOD
		HYDRAULIC FLUIDS	SILICATES	GOOD	GOOD
			PHOSPHATES	POOR	POOR
SUBJECTIVE PROPERTIES		TASTE		FAIR TO GOOD	FAIR TO GOOD
		ODOR		FAIR TO GOOD	GOOD
		NONSTAINING		GOOD	POOR TO GOOD
BONDING TO RIGID MATERIALS				GOOD	POOR TO GOOD

CHAPTER 2

MISSILE SUPPORT SYSTEMS

SECTION I

GENERAL REQUIREMENTS

2-1. GENERAL.

2-2 The data in chapter 1 also apply to missile support systems with the exceptions noted in this chapter.

2-3. DESIGN CONSIDERATIONS.

2-4. GENERAL.

2-5. Paragraphs 2-6 through 2-28 outline important factors to consider when designing missile support systems.

2-6. SEPARATION OF FUELS AND OXIDIZERS.

2-7. The storage and transfer systems for fuels and oxidizers should be separated as much as possible. The transfer piping for fuel and oxidizer should be run to opposite sides of the test stand or launch pad, and should be kept separated as much as possible up to the point of connection to the missile or test item.

2-8. LOCATION OF VENT LINES.

2-9. Fuel and oxidizer vent terminations should be separated as much as possible. This is particularly important for storable propellants which have vapors that are hypergolic and may ignite on contact.

2-10. PROPELLANT TANK PADDING AND PRESSURIZATION.

2-11. Propellant tankage should always be maintained under an inert gas atmosphere to prevent the formation of explosive vapors over the propellant and the introduction of contaminants from the exterior environment. Inert gas should also be used to pressurize the propellant tank during a transfer operation.

2-12. PREVENTION OF CROSS-CONNECTION.

2-13. Transfer hose connections for fuels and oxidizers should be of different size and/or type to prevent accidental unloading of fuels into oxidizer storage, or vice versa. Separate gas systems should be used for pressurizing fuel and oxidizer systems to prevent the possibility of propellant liquid or vapor from one system entering the other. When it is not practical to use separate storage systems, the common pressurizing system must be designed to prevent any possibility of one propellant entering the system of the other.

2-14. LIQUID AND VAPOR DISPOSAL.

2-15. The problems associated with the disposal of vapors and waste liquids have been greatly increased since the advent of toxic propellants such as those used in the Titan II missile. Liquid spills of these propellants are very hazardous and must be treated to minimize the explosive and health hazards. Spills should be drained to a basin or underground tank immediately. When basins are used, a means must be provided for suppressing the vapors given off by the propellants. This is usually accomplished by dilution with water. Disposal of these waste materials presents a major problem. Some facilities use a burner for disposal.

2-16. Vapors from these propellants are highly toxic, and the transfer system should be designed to minimize the amount of vapors that must be vented to the atmosphere. One means of minimizing the effluent from such a system is to connect the vent of the missile or test tankage to the vent of the supply tank. In this way the contents of one tank are transferred to the other, and vice versa. This method can only be used when the transfer operation is by gravity or pumping,

and both tanks can remain at the same pressure.

2-17. When vapor must be vented to the atmosphere, it must be disposed of in a manner which minimizes the health hazard to personnel in the area. Methods used to date include burning, scrubbing, and dilution with air using high vent stacks. Disposal of fuel vapors by burning is hazardous because of the possibility of igniting the contents of the tanks being vented.

2-18. FIRE PROTECTION SYSTEMS.

2-19. Several types of fire protection systems are required for the safe handling of propellants. These systems should be of the deluge type, located in areas where the possibility of propellant leakage exists. Launch pads and test cells should be equipped with flushing systems which can be used to wash propellant spills away from the area to prevent the entire contents of the missile or test item from becoming ignited. Other types of protective systems should be provided at launch facilities to provide maximum safety, including umbilical spray nozzle systems which prevent the hazard of propellant spills on the missile when the umbilical is disconnected.

2-20. SHOCK MOUNTING.

2-21. It is essential that all ground support systems be capable of withstanding the effects of earthquakes and severe ground shock such as that caused by nearby nuclear blasts. Protection of the various fluid systems requires that piping and components be mounted and supported by a specialized shock mount system to prevent damage to the fluid distribution systems. Shock mounting systems should be designed to last for the life of the systems they protect. The types and severity of shocks and vibration, and the mechanical design necessary to protect against them, are covered in the following paragraphs.

2-22. Fixed piping or tubing systems that are supported by the walls of a silo must be mounted securely, but with shock mounts that permit the system to withstand a variety of ground movement, vertically and horizontally. Earthquake shocks consist of either horizontal or vertical undulations, or a combination of both, at a relatively low frequency and high amplitudes, and may continue for a period of one or two seconds up to a minute or more. A wide range of amplitudes may be expected, and the oscillations may be in any direction. Long vertical runs of tubing pose a severe problem in suspension, in that the suspension components must be capable of supporting the considerable weight of the tubing and contents as well as protecting the tubing from destructive shock. The problem is further complicated by the existence of mechanical resonances. Any segment of pipe or group of pipes or tubing free to bend or move in any direction without sufficient damping may be set into destructive oscillation by comparatively mild recurring shocks that are near the resonant frequency of the system.

2-23. Severe ground shocks from a nearby nuclear blast, while limited in number, are of such extreme amplitude that even a single shock can excite any resonant mechanical structure into violent oscillations. In addition, if a secondary shock arrives immediately after the initial shock, the second shock may be timed so that it reinforces the shock-excited oscillations.

2-24. Another possible source of trouble during severe earth shocks is the condition in which the shock wave does not reach both ends of a long tubing run at the same time. This could result in a stretching action on the tubing that might damage the tubing or supports. One protection against such a contingency is to provide mountings for the tubing that afford a certain amount of freedom of linear motion for the tubes under unusual stress conditions.

2-25. There are three commonly used methods of shock mounting systems for protection from vibration and shock: individual components may be shock mounted, a group of components may be secured to a shock-mounted base, or the entire system may be secured to a single shock-mounted base. The securing of an entire system to a single shock-mounted base is the recommended method and the one used whenever practicable. Typical examples are shock mounting of entire underground tunnels, silo crib suspension systems, etc.

2-26. Individual component shock mounting is advantage in that nearly all equipment items can be adapted to use standard mounts which will provide the desired vibration frequencies, damping design practices have been well established in

the aircraft and shipbuilding industries, and there are a large number of shock and vibration test facilities that can handle the qualification testing of small pieces of equipment. Some disadvantages are: it is extremely difficult to evaluate the inherent restraint of connecting links between equipment or between equipment and a foundation, flexible joints must be provided because various pieces of equipment will move with differing frequencies and relative displacement, and more floor space is required because the layout of the equipment is dependent upon the displacement envelope (rattle space) during shock conditions rather than the physical size of the equipment.

2-27. The mounting of a group of components on a shock-mounted base provides a solution for connecting links between components, but the problem of connecting links between bases still exists. The rattle space is less than individual mounting, but it is dependent upon the most fragile component on the base. Less rugged equipment may be used and the cost of this type of mounting exceeds that for shock mounting individual items.

2-28. The mounting of an entire system on a shock-mounted base provides the ultimate in shock protection. All the equipment can be secured to the base structure and need not be designed to withstand high inertial loads. Only the rattle space of the base needs consideration and reliability of the system is as high as can be attained in a shock environment. Since personnel are on the same platform as the equipment, no additional protection is required. The required floor space is less than that required by the two previously mentioned methods. Limited design experience is the major problem with this method of protection and a large rattle space is needed by the base structure.

2-29. INSTALLATION.

2-30. While complete hardening of the tubing installations will be possible only after exhaustive testing programs are completed and the data are compiled and studied, there are certain installation methods that will minimize the chance of damage through extreme shock. Basic shock mounting procedures are well known, and they apply equally to tubing installations. The principle of mechanical resonance is equally well known, and corrective measures can be taken during installation procedures. Sources of mechanical resonance can often be predicted, such as those set up by having several parallel runs of similar pipes of the same length. Establishing random tie points for the various pipes of the run can break up the tendency toward oscillation by the group of pipes as a whole. See paragraph 1-573 for pipe support spacing.

2-31. Shock mounts by virtue of being “springy,” quite often lend themselves to mechanical oscillations. Metallic spring shock mounts are likely to be the most serious offenders in this respect, unless some damping features are added. Shock mounts using rubber or rubber-like compounds are self-damped to some extend. More effective damping may be obtained by use of rubber or springs in conjunction with some semi-liquid, high-viscosity material, such as the silicone compounds. In extreme cases where the added complexity is justified, damping by means of hydraulic cylinders or similar devices may be used. This method is not usually practical or necessary for general piping installations, except in certain key positions where no other method will work.

2-32. To protect hoses against the effect of vibration and shock waves, the ideal method is to contain entire length of the hose by a structural system, separated from the hose, but in no way interfering with the normal flexibility of the hose. In event of failure of the hose, the force exerted by the containment should be applied on the longitudinal axis and be evenly distributed around the outside diameter of the hose along its entire length. If it is not feasible to use this type of protection, the hose must be contained at each end by a chain, strap, or other suitable method that will prevent whipping should there be a failure in the hose or connection. (See paragraph 1-626.)

2-33. The object of shock isolation is to provide a flexible connection between the isolated object and the exterior structure or ground. The connection should provide for relative motion in all directions. Figure 2-1 illustrates a tunnel section, showing some methods of shock mounting piping. The dark blocks indicate rubber shock

mounts. The conventional elastomer mount is illustrated in figure 2-2. For heavy equipment items a rubber sandwich-type shock mount (figure 2-3) is preferable. Coil springs can be used in some instances. Figure 2-4 shows a method of using coil springs to mount a cluster of pipes, and figure 2-5 illustrates the use of coil spring to isolate a heavy piece of equipment from shock.

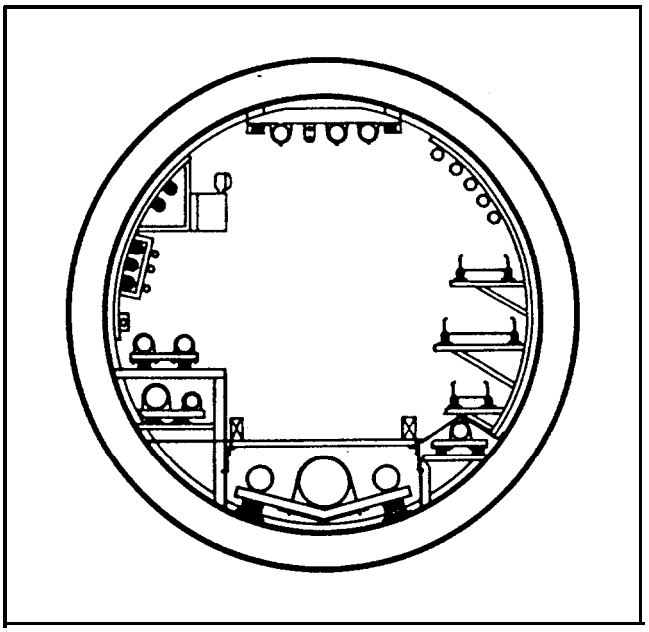

Figure 2-1. Tunnel Section

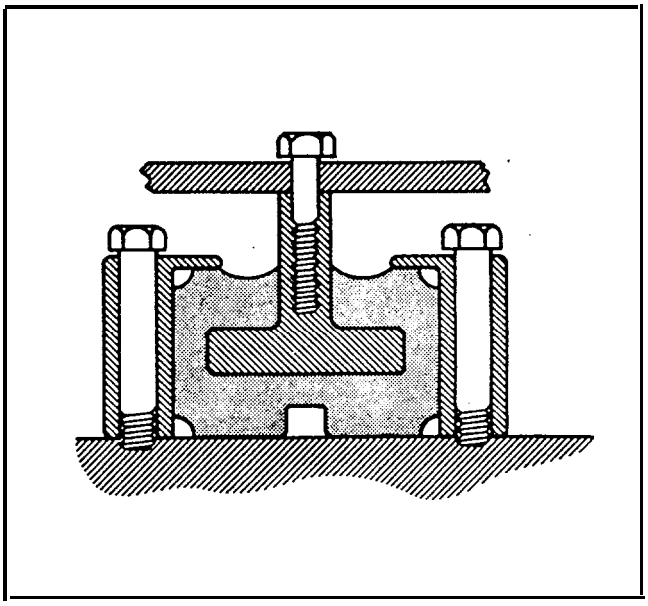

Figure 2-2. Conventional Elastometer Shock Mount

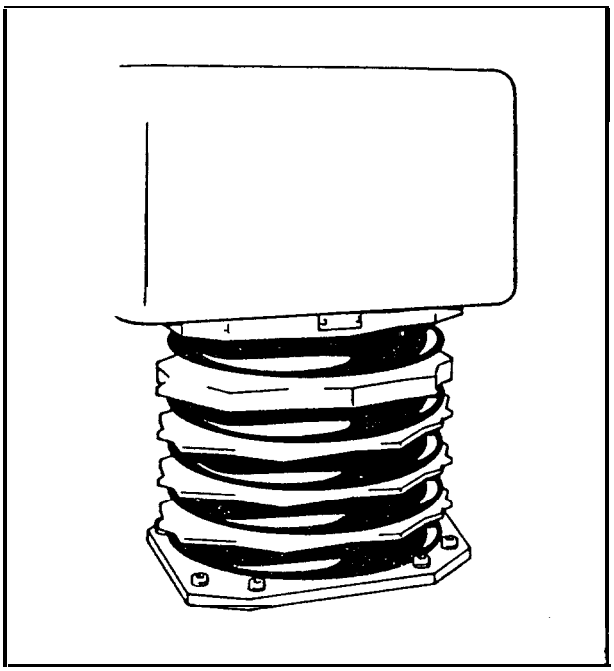

Figure 2-3. Rubber Sandwich-Type Shock Mount

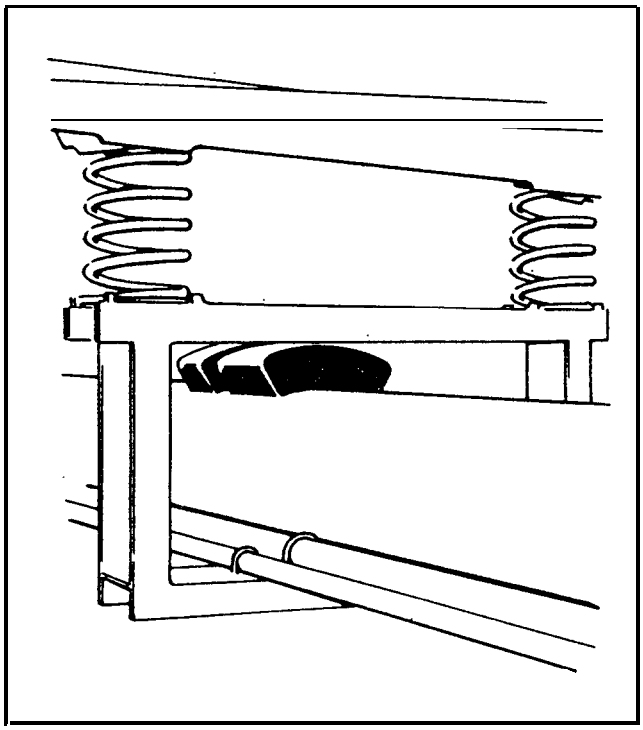

Figure 2-4. Coil Spring Shock Mount for Piping

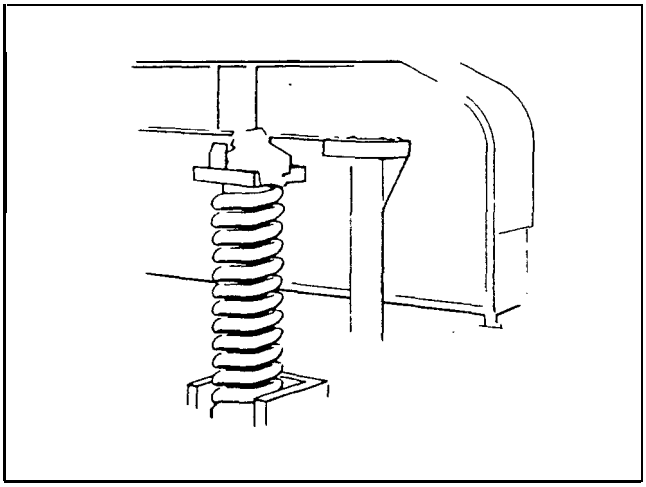

Figure 2-5. Coil Spring Shock Mount for Heavy Equipment

2-34. TEST AFTER INSTALLATION.

2-35. No testing of shock mounted system is required after installation other than to ensure that shock mounted components have the required freedom of movement and that items subject to shock are properly shock mounted.

2-36. INSPECTION AND MAINTENANCE.

NOTE

Shock mounting is usually designed for the life of the system and does not require specific periodic inspection; however, shock mounts should be visually inspected during routine inspection of shock-mounted components. In the event of a corrosive fluid spill, inspect all shock mounts and equipment items in the area for damage.

2-37. Inspection of shock mounting piping installations will not differ greatly from routine inspection procedures prescribed for ground support equipment, as long as the equipment has not been subjected to severe shock. Inspect all items subject to shock to ensure that they are protected against vibration due to shock waves. For missile weapon system configurations, inspect tunnels (tray mounted pipe runs, etc), cribs, and rattle spaces. All tubing should have a vibration support (usually a rubber or plastic grommet) located at intervals of not less than six feet. Elbows, flanges, and tees should have a vibration support located not less than one foot on either side of the connection. Inspect all vibration supports for location, wear, rigidity, and spacing between vibration support and tubing. Replace any worn or defective parts and report location and spacing discrepancies to cognizant engineering and safety personnel.

2-38. All hoses should be inspected after installation and periodically to ensure that they are adequately contained against the effects of shock waves. If hoses are not adequately protected in accordance with paragraph 2-32, immediately notify cognizant engineering and safety personnel of the discrepancy.

2-39. Inspect hoses such as silo-door lift mechanism hydraulic hoses for adequate protection against effects of nuclear blast (shock waves). These hoses usually hang vertically and are stressed for their weight. Because this type of hose installation has the additional problem of weight distribution, any movement during operation of the silo doors may cause containment against the effect of shock waves to be weakened. Inspect this type of hose installation for protection against excessive shock waves (paragraph 2-32) in the operating condition.

2-40. Inspect all shock mounted platforms and/or cribs for adequate containment of tubing and hoses. Inspect hoses per paragraph 2-38 and tubing per paragraph 2-37. In addition, ensure that adequate flexible joints are installed in tubing systems between locations (platforms or cribs) that may cause longitudinal stress on the tubing system. Ensure that flexible hose installations have enough slack to withstand longitudinal motion due to a shock wave. Notify cognizant engineering and safety personnel of any discrepancies.

2-41. Inspect all rattle spaces, particularly around the periphery of silo cribs (silo walls), for adequate flexible joints, correct shock mounting of tubing runs, and proper supports at shear points. Inspect tubing runs mounted to silo walls for proper support due to weight as well as containment against the effect of shock waves (horizontal or twisting motion). Report discrep-

ancies to cognizant engineering and safety personnel.

2-42. In the event that the equipment encounters unusually severe shock, all pipe and tubing and mounting component must be inspected carefully for damage and for signs of undue mechanical oscillation. Check pipes and tubing for indication of physical contact with other components at pints that normally would not be in mechanical contact with other material. This is most likely to occur on pipes and tubing at a position midway between two tie points. The position of the wear or contact points will provide a clue to the type and direction of oscillation, and will permit corrective action to be taken.

CHAPTER 3

AIRBORNE SYSTEMS

SECTION I

GENERAL REQUIREMENTS

3-1. GENERAL.

3-2. The data in chapter 1 also applies to airborne systems, with the exceptions noted in this chapter. Airborne pressure systems generally contain hydraulic fluid, fuel, lubricating oil, hot and cool air, and breathing oxygen. The pressure generally range from a vacuum to approximately 3,000 psig.

3-3. SYSTEM INSTALLATION.

3-4. Installation of systems shall be performed with the highest order of workmanship, in compliance with procedures listed in the applicable aircraft technical manual.

3-5. TESTING.

3-6. All repaired or modified systems or portions of systems shall be proof and leak tested in accordance with procedures listed in the applicable aircraft technical manual.

3-7. INSPECTION AND MAINTENANCE.

CAUTION

When substitute parts are used for repair, ensure that proper engineering authorization is obtained prior to their use.

3-8. Systems shall be checked for proper workmanship by the immediate supervisor and/or inspector during installation and maintenance. The inspector shall inspect and approve all final installations. Periodic checks shall be made by qualified personnel at intervals specified in the applicable aircraft technical manuals.

SECTION II

DESIGN CONSIDERATIONS

3-9. PRESSURE RANGES AND SUITABLE EQUIPMENT ITEMS.

3-10. Size, weight, and reliability of components are prime considerations in the design of airborne systems; hence, pressure rarely exceed 3,000 psig, and safety factors are lower than for similar ground equipment. Because of low strength to weight ratios, the use of carbon steel, brass, and copper components should be kept to a minimum.

3-11. HYDRAULIC SYSTEMS.

3-12. Refer to Specification MIL-H-8775B when selecting components for design of airborne hydraulic systems or replacement.

3-13. CRYOGENIC SYSTEMS.

3-14. Refer to Specification MIL-I-9475A when selecting components for design of liquid oxygen airborne breathing systems or replacement.

3-15. FUEL SYSTEMS.

3-16. Refer to Specification MIL-F-8615A when selecting components for design of fuel systems or replacement.

SECTION III

COMPONENT SELECTION

3-17. GENERAL INFORMATION.

3-18. Since high strength with low weight is mandatory in airborne equipment, thin-wall stainless steel and aluminum-alloy pressure tubing are often used.

3-19. SAFETY FACTORS.

3-20. Safety factors may range from as low as 1.0 (nonshock condition) for components in unmanned missile systems to 1.5 for those in manned vehicles.

3-21. TUBE DATA.

3-22. Thick-walled type 6061 and 6062 aluminum-alloy tubing (Specification MIL-T-7081) are used for pressure lines, and thin-walled tubing is used for return lines in some airborne systems.

3-23. Type 303 stainless steel tubing is more susceptible to stress corrosion than the other 300 series stainless steels, when subjected to high stress concentrations; therefore, frequent inspection should be made of highly stressed arts fabricated from type 303 tubing.

3-24. Refer to Specification MIL-H-5440C when selecting tubing for use in aircraft hydraulic systems, and Specification MIL-I-9475A when selecting tubing for use in aircraft liquid oxygen systems.

3-25. FLEX HOSE.

3-26. Flex hose for use with airborne equipment may be identical to that used for ground installations. New types are under development for specific applications in airborne equipment where light weight, resistance to heat, and compatibility with synthetic fluids are prime considerations. Figure 3-1 lists the more common types of aircraft flex hose and their uses.

3-27. Synthetic rubber hose intended for use with airborne equipment is marked for ready identification to prevent issue and installation of over-age or improper type hose on aircraft or aircraft accessories. The manufacturer's name, symbol, or code number, the date of manufacture, size, and military specification number are repeatedly stenciled along the full length of the hose.

SPECIFICATION NUMBER	DESCRIPTION	IDENTIFICATION MARKINGS
MIL-H-8788	Non-selfsealing aromatic resistant. Use to fabricate hose assemblies with detachable end fittings. See TO 42E1-1-6 for details. Refer to figure 1-47 for specifications.	Manufacturer's symbol, specification number, size quarter year, and year of manufacture in yellow. Rubber cover.
MIL-H-8794	Non-selfsealing, aromatic resistant. Use to fabricate hose assemblies with reusable end fittings. See TO 1-1A-8 for details. Refer to figure 1-47 for specifications.	All markings in yellow. Braided cover.
MIL-H-5593	Non-selfsealing, aromatic resistant. Use to fabricate hose assemblies with detachable end fittings, for instrument air lines only. Refer to figure 1-47 for specifications.	All markings in yellow. Rubber cover.
MIL-H-6000	Non-selfsealing, aromatic and heat (not flame) resistant. Maximum operating temperature is 250°F (121°C). Use with hose clamps. Normally used as a non-pressure line only . When lengths in excess of 18 inches are required, use hose MIL-H-7938. Refer to 'figure 1-47 for specifications.	Manufacturer's symbol in red. Specification number, size, quarter year, and year of manufacture in white.

Figure 3-1. Airborne Flex Hose (Sheet 1 of 3)

SPECIFICATION NUMBER	DESCRIPTION	IDENTIFICATION MARKINGS
MIL-H-7938	Non-selfsealing, aromatic and flame resistant. Use with hose clamps. See MIL-H-6000 figure 1-47) for specification.	Same as MIL-H-6000.
MIL-H-7061	Selfsealing, aromatic resistant. May be used interchangeably with hose MIL-H-6000 or MIL-H-7938. Bend radius is less than either of these hoses. Used most often for fuel lines. See MIL-H-6000 (figure 1-47) for specifications.	Manufacturer's symbol or name, propriety number, quarter year, and year of manufacture in red above a solid red stripe.
MIL-H-26626	Teflon hose assemblies with stainless steel outer braid for use in gaseous and liquid oxygen converter systems. Maximum operating pressure is 500 psig. Fittings mate with MS33656 end connectors.	
MIL-H-26633A	Teflon hose assemblies with stainless steel outer braid for breathing oxygen *use.* These are specially cleaned, flushed, and packaged to exclude harmful impurities. Fittings mate with MS33656-5 end connection. Maximum operating pressure is 3000 psig.	
MIL-H-26666A	Pneumatic hose assemblies with polyethylene liner and stainless steel wire braid reinforcement. Maximum operating pressure is 4000 psig.	
MIL-H-27267	General purpose teflon hose. Operating temperature range is -65° to +450°F (-54° to +234°C). Use to fabricate hose assemblies (MIL-H-25579) with detachable end fittings. Maximum operating fluid pressure is 1500 psig.	Identification bands showing the specification number, manufacturer's code number, and operating pressure.
ARP 604A	Teflon hose assemblies for 3000 psig high-temperature lines in aircraft and missile fluid systems. Temperature range is -65° to 400°F (-54° to +206°C).	Identification bands showing specification number, manufacturer's code number, and operating pressure.
Hose assemblies, Aeroquip 601000 or equivalent.	Used for aircraft power plant fuel and synthetic lubricating oil lines where light weight and ability to withstand high operating temperatures are prime considerations. Inner liner of synthetic material with stainless steel wire braid cover. Temperature range is -40° to +300°F (-40° to +150°C) at 1500 psig.	Bright wire braid outer cover with red markings.

Figure 3-1. Airborne Flex Hose (Sheet 2 of 3)

SPECIFICATION NUMBER	DESCRIPTION	IDENTIFICATION MARKINGS
Hose assemblies Aeroquip 636 or equivalent	A hose assembly with a silicone inner liner and stainless steel wire braid outer cover. Use for hot air lines such as jet engine anti-icing systems. Temperature range is -65° to 500°F (-54° to 262°C) at 125 psig.	Dull wire braid outer cover with black markings.
Hose assemblies Aeroequip 617000 equivalent	Use for aircraft fuel and oil systems and vent and drain lines. A hose assembly with Buna-N inner liner and cotton braid cover. Temperature range is -40° to +300°F (-40° to +150°C) at 125 psig.	Grey-black braided cover with red markings.

Figure 3-1. Airborne Flex Hose (Sheet 3 of 3)

CHAPTER 3

SECTION IV

FABRICATION OF COMPONENTS

3-28. Aluminum tubing used in exposed areas, such as wheel wells and missile bays, at geographic locations where extreme humid and salt air conditions are present, should be protected against corrosion by one of the following methods.

a. Treat with a chemical film in accordance with Specification MIL-C-5541, wash prime to Specification MIL-C-8514, and paint with a zinc chromate paint conforming to Specification MIL-P-8585 or MIL-P-7962.

b. Apply anodic coating in accordance with Specification MIL-A-8625, wash prime to Specification MIL-C-8514, and paint with a zinc chromate paint conforming to Specification MIL-P-8585 or MIL-P-7962.

SECTION V

FABRICATION AND INSTALLATION OF SYSTEMS

3-29. GENERAL REQUIREMENTS.

3-30. Refer to applicable aircraft technical manuals and Specification MIL-H-5440 when installing hydraulic systems and MIL-P-5518 when installing pneumatic systems, respectively in aircraft.

3-31. Refer to applicable aircraft technical manuals and Specification MIL-I-9475A when installing liquid oxygen systems in aircraft.

3-32. CLEANING.

WARNING

The liquid and vapor of trichloroethylene can be harmful to the eyes and skin. Excessive vapor concentrations are harmful to breathe. Use only where adequate ventilation is available. Request the medical service to survey work area to determine if proper precautions are being taken and that vapor concentrations do not exceed acceptable limits. Trichloroethylene vapors must be removed completely from all breathing oxygen equipment. Vapors of trichloroethylene may be flammable in concentrations of 12.5 volume percent to 90 volume percent in air and at a temperature from 86°F to 212°F. Trichloroethylene vapor of liquid must be removed completely from all breathing oxygen equipment or other oxidizing agents.

3-33. Airborne breathing oxygen system components may be cleaned by means of either liquid or vaporized trichloroethylene vapor degreaser, Specification MIL-T-7003. After cleaning oil and grease from piping or tubing, blow out with filtered air at 200°F (+94°C) until each component has adopted this temperature for at least five minutes. Place fittings, valves and other components in an oven and bake at 250°F (+122°C) for two hours. Inspect all parts for residual trichloroethylene vapors and repeat purging and baking procedure if necessary.

3-34. All components should be immediately capped, sealed, or enclosed in a plastic bag after cleaning, unless they are to be installed in the airplane at once.

3-35. TAPERED PIPE THREAD CONNECTIONS.

3-36. When assembling fittings with tapered pipe threads in oxygen breathing systems, and pneumatics systems, teflon tape, Specification MIL-T-27730, shall be used on all male fittings. Thoroughly clean male and female threads assuring the removal of all previously applied antiseige compound or tape. Wrap tape in direction of thread spiral of male/pipe thread beginning 1 1/2 threads back from the end. In no case will the tape be permitted to extend beyond the first thread. Use care not to contaminate the tape, encircle the threads and join together with a very slight overlap. Size 1 tape, 1/4-inch wide, shall be used on 1/8-, 1/4- and 3/8-inch pipe threads. Size 11 tape, 1/2-inch wide, shall be used on 1/2-inch and larger pipe threads. The tape shall not be used on fittings which have flared - tube fitting - straight threads, coupling sleeves, on the outside of tube flares, or on female threads.

NOTE

Teflon tape may be procured in special dispensers to prevent contamination prior to application by the following FSN:
1/4-inch width - 8030-889-3534
1/2-inch width - 8030-889-3535
Solder conforming to Federal Specification QQ-S-571, composition SN60 or SN62, may be used on brass or stainless steel male tapered pipe threads for lubrication and sealing compound in lieu of Teflon Tape.

CHAPTER 3

SECTION VI

TESTING COMPONENTS AND SYSTEMS

3-37. GENERAL TEST REQUIREMENTS.

3-38. Refer to applicable aircraft manuals for test procedures for aircraft hydraulic systems. In the absence of specific directive for test pressures for aircraft hydraulic components and systems, leak tests shall be performed at maximum service pressure and proof tests shall be performed as directed in MIL-H-5440 and MIL-H-8775 unless otherwise specified. Hydrostatic proof testing of aircraft pneumatic components including gaseous oxygen equipment, is required under certain conditions. Unless otherwise specified, test pressures shall be conducted in accordance with MIL-P-5518 and MIL-P-8564, unless otherwise specified. All components approved for compressed gaseous service should be hydrostatically tested prior to delivery to the Air Force.

a. Testing shall be accomplished whenever one of the following occurs:

(1) When the unit has been dropped or damaged.

(2) When evidence of corrosion or other physical deterioration exists.

(3) When repair or modification of any nature whatsoever has been made.

b. In addition to the above conditions, all high pressure (above 500 psig service pressure) vessels over two inches in diameter shall be periodically

tested as directed by applicable aircraft manuals. In absence of direction by applicable aircraft manuals test every five years. Refer to paragraph 1-654 for test procedures.

c. If hydrostatic testing is not feasible due to design or facilities considerations, pneumatic testing may be conducted on low pressure (below 500 psi service pressure) pneumatic components and systems per paragraph 1-703.

3-39. Refer to applicable aircraft technical manuals and specification MIL-I-19326 latest revision, for test procedures for aircraft liquid oxygen systems.

SECTION VII

INSPECTION AND MAINTENANCE

3-40. GENERAL REQUIREMENTS.

3-41. Refer to applicable aircraft technical manuals and TO 15X-1-1 for inspection and maintenance procedures for aircraft breathing oxygen components and system.

CHAPTER 4

AEROSPACE GROUND EQUIPMENT

SECTION I

GENERAL REQUIREMENTS

4-1. GENERAL.

4-2. Aerospace Ground Equipment (AGE) pressure systems contain gases or liquids under pressure and varying temperatures, including cryogenic. As weapon systems requirements are constantly changing, frequent modifications or additions to AGE equipment will be required. To assure safety of personnel and proper operation of equipment, the requirements listed shall be complied with by all personnel.

4-3. OPERATING PRESSURES.

4-4. The pressure range of AGE equipment is from approximately one Torr absolute to 12,000 psi. The upper limit is based on equipment currently in the AGE inventory. As the state of the art and technological knowledge is advanced, these pressures can be expected to increase. Pressure systems safety precautions apply to all pressures in this range. The degree of hazard in pressure systems is proportional to the amount of energy stored, not the amount of pressure present. Therefore, low pressure, high volume systems can be as hazardous to personnel and equipment as high pressure systems of lower volumes.

4-5. SELECTION OF MATERIAL.

4-6. Selection of material shall be in accordance with Chapter 1.

4-7. SYSTEM INSTALLATION.

4-8. System installation shall be in accordance with Chapter 1.

4-9. TESTING.

4-10. Since leaks can never be tolerated in pressure systems, all new, repaired, or modified systems or portions of systems shall be proof and leak tested prior to activation. Periodic testing of pressure systems shall be in accordance with the applicable system and/or equipment technical manuals. In the absence of specific instructions in a particular system and/or equipment technical manuals, procedures in this manual apply.

4-11. INSPECTION AND MAINTENANCE.

4-12. AGE shall be check for proper operation by the immediate supervisor and/or technical inspector when assigned, and at least every two months thereafter. Air receivers for systems operating above 500 psig shall be drained of condensate and oil every 60 days; all air receivers shall be drained annually. Moisture and oil separators, dehydrator cartridges shall be changed and maintained in accordance with the system technical orders.

4-13. Pneumatic systems used for the actuation of instruments and/or controls should have oil-free compressors. Those systems that do not have oil-free compressors should have oil free compressors installed when a compressor is removed from major rebuilding and/or replacement.

4-14. Moisture and/or oil in instrument pneumatic systems can cause improper operation of the system and may cause mission failure.

4-15. All instrument compressed air receivers shall be blown twice a week from 100 percent maximum operating pressure to 90 percent maximum operating pressure to remove accumulated moisture and oil from the receiver.

4-16. All instrument compressed air receivers shall be tested every two weeks with a CEC Moisture Monitor, Model 26-350 (as specified in TO 42B7-3-1-1). If moisture content of the receiver air exceeds -50°F dewpoint, 83 parts per million or 0.362 grains per pound, the receiver shall be bled to 0 psig pressure. The receiver shall then be purged with dry air (maximum 11 parts water per million) or dry gaseous nitrogen. Purge shall be continued until the monitored moisture content falls within the above limits.

4-17. The input from the compressor shall be monitored and moisture content of compressor air shall not exceed 37 parts per million, -63°F dewpoint.

CHAPTER 4

SECTION II

DESIGN CONSIDERATIONS

4-18. Applicable portions of Chapter 1, Section II shall govern.

SECTION III

COMPONENT SELECTION

4-19. Applicable portions of Chapter 1, Section III shall govern.

SECTION IV

FABRICATION OF COMPONENTS

4-20. Applicable portions of Chapter 1, Section IV shall govern.

SECTION V

FABRICATION AND INSTALLATION OF SYSTEMS

4-21. Fabrication and installation of installed AGE systems shall be in accordance with Chapter 1, Section V.

SECTION VI

TESTING COMPONENTS AND SYSTEMS

4-22. GENERAL.

4-23. AGE Equipment and systems at the missile sites cover propellant, oxidizer, pressurization and instrument air installed systems, as well as portable systems.

4-24. Test methods and procedures as outlined in Chapter 1, Section VI shall be used.

WARNING

Testing with air or gas is extremely hazardous and should be done only when absolutely necessary, and when special precautions to safeguard personnel and equipment have been made and approved by cognizant safety personnel. All the safety precautions for testing with air or gas shall be used when testing with liquid nitrogen or any other cryogenic fluid, due to extreme vapor pressures of these fluids.

4-25. HYDROSTATIC TESTING PROCEDURES FOR HIGH PRESSURE AGE SYSTEMS.

4-26. GENERAL CONSIDERATIONS.

4-27. Individual components such as operating valves, relief valves, regulators and burst diaphragms normally do not require hydrostat. It is advisable to remove any of these items that may sustain internal or other damage due to hydrostat. Caps, plugs or spools should be used in place of such items. If any of the com-

ponents are installed in the system in such manner that they cannot be removed, the internal working should be removed and reinstalled after hydrostat is completed.

4-28. A system may be hydrostated individually in all its sections or as an assembled systems, whichever is more feasible.

4-29. SAFETY PRECAUTIONS.

4-30. Extra care should be exercised to bleed all air from the system to be tested.

4-31. Barricades and designated controlled areas should be used to the greatest extent possible. Large vessels and extensive systems which are fixed should have the area controlled to limit access while hydrostatic testing is in process.

4-32. Hands should never be used to probe for leaks in high pressure systems. Folded absorbent paper makes an effective and safe probe. Moisture can easily be detected in the paper.

4-33. Hydrostatic leakage (but not pneumatic) on flanged connections can be safey repaired while the system is under pressure of no greater than 500 psi. No attempt should be made to correct leaks at a greater pressure.

4-34. No attempt should be made to repair leaks by welding when the system is under pressure or the test fluid has not been drained. Approval of cognizant safety officer shall be obtained before start of welding.

4-35. Make sure that personnel and equipment are not in front of relief port before releasing test pressure.

4-36. HYDROSTATIC TEST PROCEDURES.

4-37. Remove or render safe components that may be damaged when subjected to hydrostatic test pressures.

4-38. FLEX HOSE CONTAINMENT.

4-39. High flow, low and medium pressure hose used on industrial and construction type pneumatic tools, industrial and AGE equipment should be contained at both ends of the hose. Containment similar to the Brogart Safety Latch is recommended for this application.

CHAPTER 5

PRESSURE VESSEL RUPTURE HAZARDS AND SAFETY CRITERIA FOR BARRICADES AND SYSTEMS

SECTION I

GENERAL REQUIREMENTS

5-1. GENERAL.

5-2. The data in Chapter 1 also apply to barricades. Data unique to Rupture Hazards will be incorporated into this chapter when it becomes available.

CHAPTER 6

VACUUM SYSTEMS

SECTION I

GENERAL REQUIREMENTS

6-1. GENERAL.

6-2. Vacuum systems function to provide a condition of almost a complete lack of atmosphere. They are most widely used for two purposes: providing cryogenic vacuum insulation, and providing environmental chambers for space simulation.

6-3. OPERATING VACUUM PRESSURES.

6-4. Vacuum pressure described in this chapter range from atmospheric to 1 x 10-12 millimeters of mercury. Another unit of measure of vacuum used to a great degree is torr. One torr is equivalent to one millimeter of mercury.

6-5. SELECTION OF MATERIALS.

6-6. Materials used in vacuum systems must be selected carefully. They must be nonporous, since any slight leak will cause the system to fail. Materials used in cryogenic vacuum insulation systems must also be compatible at cryogenic temperatures.

6-7. SYSTEM INSTALLATION.

6-8. Vacuum system installation shall be performed with the highest order of workmanship to ensure a tight, leak-free system.

6-9. TESTING.

6-10. Since leaks cannot be tolerated in vacuum systems, all new, repaired, or modified systems or portions of systems shall be leak tested prior to being placed in service. Periodic testing of vacuum systems shall be in accordance with the applicable system technical manuals. In the absence of specific instructions in a particular system technical manual, procedures in this manual shall apply.

6-11. INSPECTION AND MAINTENANCE.

6-12. Systems shall be check for proper workmanship by the immediate supervisor and/or cognizant technical inspector during installation.

NOTE

A coupon should be taken from the same material batch that the component is fabricated from, should be treated concurrently with each vacuum system component. The laboratory test data showing ultimate and yield strengths, hardness, etc, should accompany each items when feasible. The data shall be made available to the inspector prior to acceptance.

The technical inspector shall inspect and approve all final installations. He shall permanently stamp his identification symbol or number on or adjacent to the component nameplate. Periodic checks shall be made by the immediate operating supervisor and/or technical inspector to ensure safe and reliable operation of the systems. In the event of a system failure, notify the cognizant engineering personnel so that a system failure analysis report can be prepared. If there is a need for a component substitution, consult with cognizant engineering personnel and obtain approval prior to the selection of a substitute part.

CHAPTER 6

SECTION II

DESIGN CONSIDERATIONS

6-13. BASIC CONSIDERATIONS IN SYSTEM DESIGN.

6-14. When a vacuum system is designed, several factors must be considered to provide a safe facility. Among these are reliability, compatibility, and maintainability. The system should be as simple, basic, and foolproof as possible. This adds to the reliability and safety of the system. No single malfunction or misoperation of any component should create a major hazard or incident.

6-15. VACUUM LIMITATIONS.

6-16. The degree of vacuum attainable depends mostly on the type of pump used to create the vacuum; therefore, the pump selected must be capable of attaining the desired degree of vacuum. The vapor pressure of the pump lubricant must be less than the vacuum desired. Other limitations are the type of materials used and the quality and type of construction. Care must be used in construction at both component and system levels to ensure a leak-tight system.

6-17. MATERIAL SELECTION.

6-18. One of the major problems in designing vacuum systems is the selection of materials to be used in the manufacture of piping, valves, pumps, seals, gaskets, and fittings. The materials selected for the various components must be of a type such that, when properly assembled, leaks will not exist in the system.

SECTION III

COMPONENT SELECTION

6-19. PIPE.

6-20. Nearly all common structural metals may be used for vacuum lines. Stainless and carbon steel and aluminum are widely used. Sulphon tubing, a seamless corrugated tubing, may be used to obtain flexibility between various parts of the system.

6-21. VACUUM PUMPS.

6-22. ROTARY PUMPS.

6-23. Most vacuum system in use today employ mechanical pumps to rough-evacuate the system in the range from atmospheric pressure down to approximately 10^{-2} mm Hg. These pumps are of two general types, the rotary vane (figure 6-1) and the rotary piston (figure 6-2). The rotary vane pump, generally used in sizes up to about 50 cfm, contains a rotor on an eccentric axis in the pump cylinder. Springloaded vanes extend out from the rotor, and seal against the walls of the pump by means of an oil film. The rotating vane traps a volume of gas that has entered the inlet and then sweeps it around and compresses it, finally expelling it through a discharge valve. These pumps have a flat pumping characteristic, from atmospheric pressure to about 10^{-1} mm Hg, and then drop off sharply, showing a minimum attainable pressure of about 10^{-3} mm Hg. This minimum attainable pressure is limited by decomposition products of the oil that are formed at the sliding seals and by gas trapped in the oil and carried from the discharge to the inlet side. The rotary vane pump is characterized by quiet, vibration-free operation. Mechanical design considerations limit these pumps to capacities of about 50 cfm. Capacities above this are generally handled by rotary piston pumps, which also employ an oil seal, but not a sliding type. The drive shaft of the rotary piston pump is located on the center line of the pump cylinder. An eccentric is mounted on the drive shaft, and the close clearance between eccentric and housing traps the gas from the inlet side. A discharge valve is used at the outlet. To minimize vibration due to the rotation of this eccentric mass, the pump is often built in two sections with the eccentrics 180 degrees apart. Pumps of this type are available in capacities up to about 1,200 cfm.

6-24. ROOTS-TYPE BLOWERS

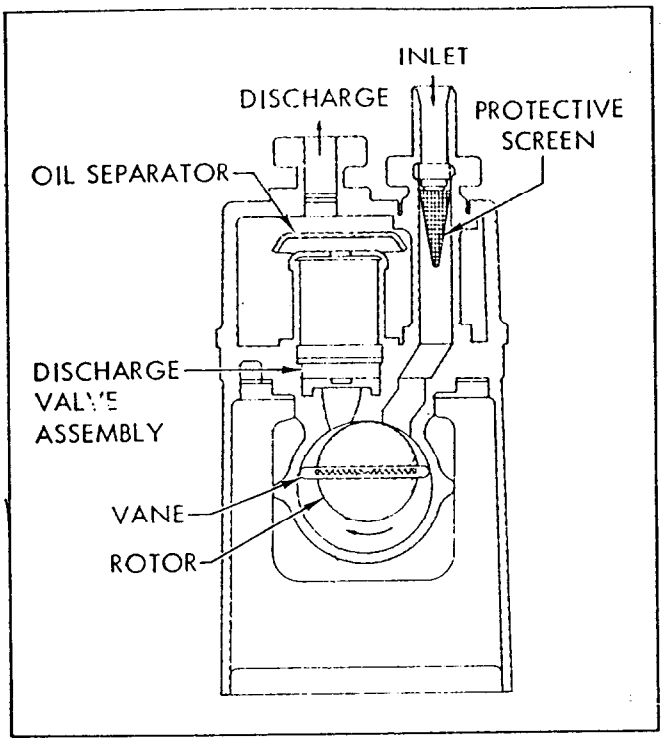

Figure 6-1. Rotary Vane Pump

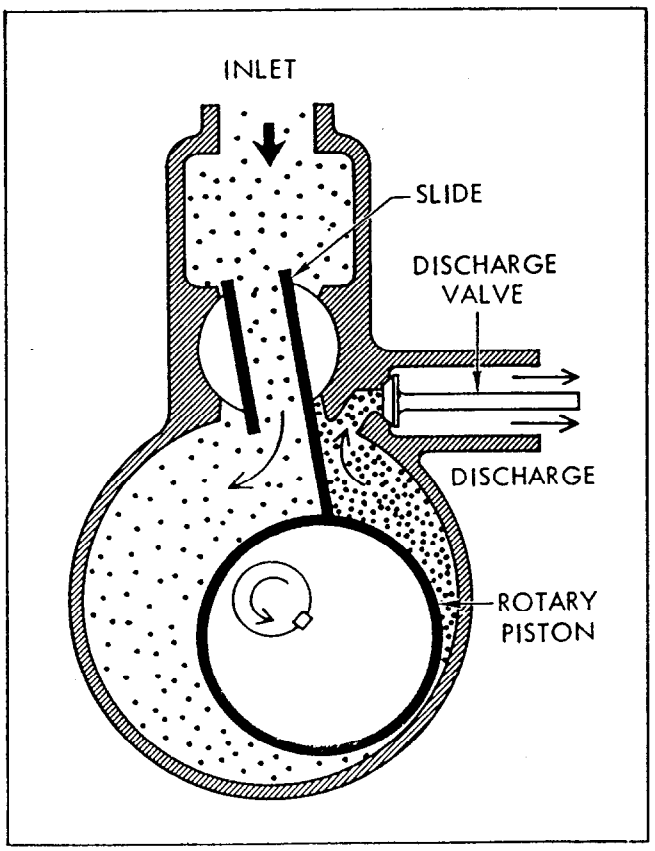

Figure 6-2. Rotary Piston Pump

6-25. Roots-type blowers (figure 6-3) are frequently used in conjunction with oil-sealed mechanical pumps. These blowers consist of two counter-rotating lobes, each with a figure-8 cross section. The important distinguishing features, when comparing the Roots-type blower to a conventional mechanical pump, are the absence of oil as a seal in the blower and the fact that the blower operates at high speeds without valves. Major application of these blowers is in series operation with oil-sealed mechanical pumps that discharge to the atmosphere. Roots-type blowers are available in capacities from less than 100 cfm up to about 12,000 cfm; they are, therefore, often the correct design choice when large pumping capacities are required in the range from a few mm Hg down to about 10^{-2} mm Hg. Another application has arisen from the need to evacuate extremely large volumes in short periods of time. Here, a number of Roots-type blowers are used in parallel during initial evacuation when the horsepower requirement is relatively small because of the small pressure differential across the blowers. As the pressure in the chamber being evacuated drops, the blowers are gradually shifted into a series operation to limit the pressure drop across each machine, and the blower discharge is handled by a rotary oil-sealed pump.

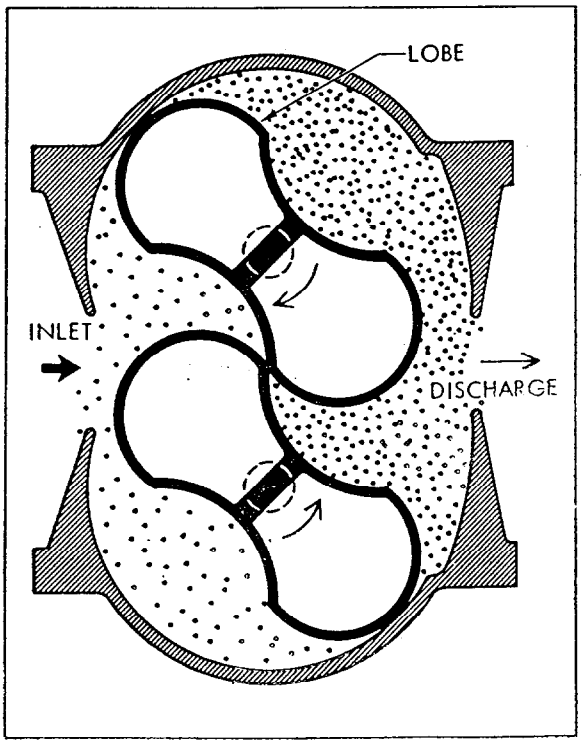

Figure 6-3. Roots-Type Blower

6-26. STEAM EJECTOR.

6-27. Where high-pressure steam is readily available, rough-pumping of a vacuum system may be done with steam ejectors (figure 6-4). Where pressures in the order of 10^{-2} mm Hg are required, multistage steam ejectors are used. A five-stage ejector can reach an ultimate low pressure of about 20 x 10^{-3} mm Hg. The ultimate pressure is limited by the compression ratio attainable across each ejector stage, and by the back flow of the pumped gas escaping from the zone of the jet. The size of additional stages increases as lower pressures are sought. Steam ejectors are preferable to mechanical pumps when large amounts of condensable vapor, especially water vapor, are to be handled; however, the ejector's high consumption of steam and cooling water and their large physical size limit their use in other applications.

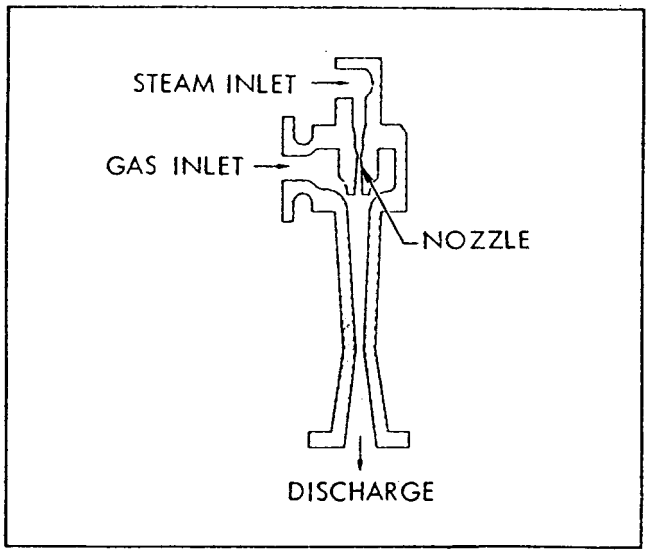

Figure 6-4. Steam Ejector

6-28. DIFFUSION PUMPS.

6-29. Just as the rotary oil-sealed pumps dominate the field from atmospheric pressure to about 10^{-2} mm Hg, oil diffusion pumps are most frequently used in the lower pressure ranges. The operating principle of a diffusion pump is shown in figure 6-5. A diffusion pump is basically a cylinder, flanged at the top (inlet) for mounting. Cooling coils surround the upper 2/3 of the body. The bottom is closed and fitted with a heater. At one side is the outlet (foreline). Inside is an array of concentric cylinders capped to leave small openings through which vapor can emerge. This is the jet assembly, and is the heart of the diffusion pump. Since this type of pump cannot discharge directly into the atmosphere, mechanical pumps are required to reduce the pressure to the operating range of the diffusion pump. Vacuum pumping systems normally include at least one pump of each type. The mechanical pump removes about 99.99 percent of the gas from the chamber. This operation, described as rough-pumping, reduces pressures in chamber to 10^{-1} mm Hg or less. The remaining gas, down to a residual pressure from 1 micron (10^{-3} mm Hg) to 10^{-10} mm Hg or lower, is removed by the diffusion pump, discharging into the mechanical pump.

6-30. To understand how a diffusion pump works, consider the job it has to do. According to kinetic theory, all gases consist of enormous quantities of molecules in random motion, colliding with one another and with the walls of the confining chamber (exerting pressure). At atmospheric pressure, each cubic centimeter contains about 3 x 10^{19}, or 30 million trillion molecules. Under these crowded conditions, gas behaves as a viscous medium, and mechanical pumps are effective. As the pressure drops, the number of collisions decreases. At 1 micron (10^{-3}mm Hg) there are only about 4 x 10^{13}, or 40 trillion molecules left in each cubic centimeter, and the average distance between molecular collisions is large. The diffusion pump operates in the region where molecules reach it by random kinetic motion or "diffusion." If the pump were not there, these molecules would continue to rebound from the wall of the vacuum chamber. The actual process of removing gas molecules takes place with the aid of diffusion pump fluids. These are especially refined heavy oils having an extremely low vapor pressure. The boiler or heater in the diffusion pump converts the oil into vapor. The vapor rises in the concentric columns of the jet assembly and is emitted downward from the nozzles at supersonic velocity. The stream of oil vapor engulfs the smaller gas molecules that have entered the pump chamber. As the gas molecules are carried downward, they are compressed and pumped away by the mechanical pump, which is connected to the foreline of the diffusion pump. Condensed oil vapor returns to the boiler from the water-cooled walls of the pump. In its course to the center of the boiler, oil temperature rises rapidly and new vapor

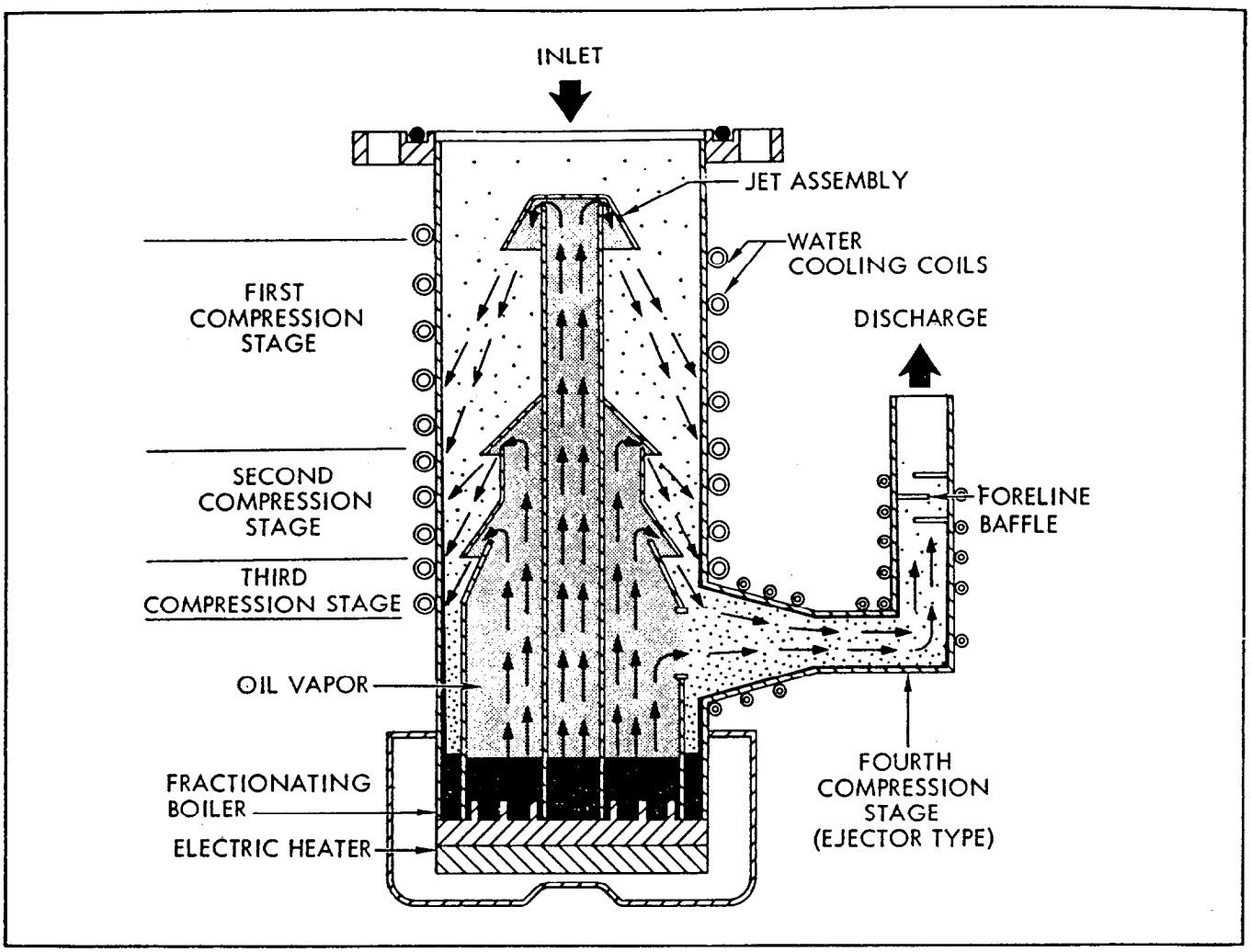

Figure 6-5. Four-Stage Diffusion Pump

is continuously formed. Since diffusion pump fluid, although thermally stable, decomposes at a small but finite rate, it produces fractions of lower molecular weight and lower boiling point that are not themselves pumping fluid. Over long periods of time, enough of these fractions may accumulate to impair pumping speed and necessitate draining and refilling with new fluid. If the jet is designed to separate these high vapor pressure contaminates as they are formed, they will be pumped away with the gases, thus maintaining the integrity of the original fluid. This characteristic is termed “fractionation,” and is very desirable in a diffusion pump, where reliability in the ultrahigh vacuum range is important.

6-31. In some analytical apparatus, mercury diffusion pumps are preferred, since mercury or its cracking products are more easily identifiable if they should migrate into the vacuum system because of improper pump operation. With all diffusion pumps, a minute quantity of vapor tends to travel back from the pump inlet toward the vacuum chamber. This is called backstreaming. Since backstreaming contributes to vacuum contamination, the best performance is obtained when the backstreaming rate is reduced to a minimum. By installing a 90-degree elbow between the pump and the chamber, backstreaming is reduced to less than 0.1 percent of the amount encountered directly over the pump. A liquid nitrogen baffle installed between the diffusion

pump and the vacuum chamber will reduce backstreaming to such a low level that no contamination can be detected in the chamber, even after months of pumping.

6-32. The lowest pressure attainable by the diffusion pump is determined in part by the vapor pressure of the oil at the temperature of available cooling water. Oils which have recently become available, such as Dow Corning XF-4660 silicone fluid, have vapor pressures under these conditions of about 10^{-9}mm Hg. The use of suitable traps and baffles, even at room temperature, makes it possible to obtain lower pressures with this fluid. Recent developments in diffusion pumps have improved the general efficiency and range of performance to make them the most reliable means of pumping from 10^{-3} to 10^{-11} mm Hg.

CAUTION

Oil diffusion pumps should never be opened to the atmosphere when the oil is hot, as this might cause decomposition of the oil. Pump heaters should not be energized when the backing pressure of the pumps is higher than 0.4-mm Hg, since the oil may become overheated.

6-33. TURBOMOLECULAR PUMP.

6-34. The turbomolecular pump (figure 6-6) is always used in series with another pump. This pump is basically an axial flow compressor designed for operation in the molecular flow range.

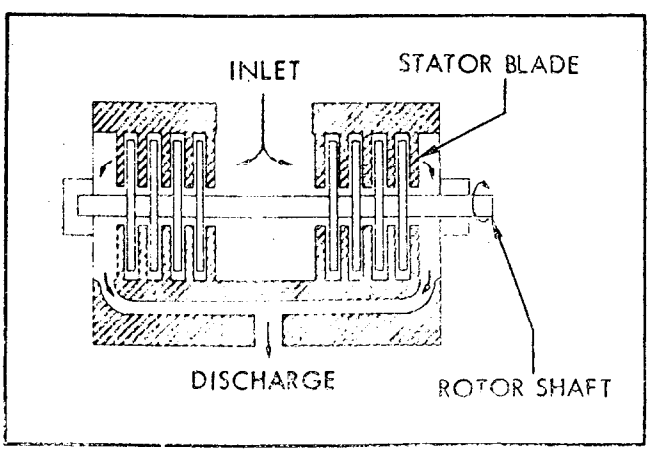

Figure 6-6. Turbomolecular Pump

It offers the advantage of a very wide operating range, low ultimate pressure, and very clean operation because it does not use working or sealing fluids. The major disadvantage of this pump is the maintenance problem of high-speed rotating machinery.

6-35. SPUTTER-ION PUMP.

6-36. Sputter-ion pumps (figure 6-7) are rapidly gaining popularity. The pumping action is a combination of ionization and chemical gettering by sputtered titanium metal. Electrons emitted from the titanium cathodes are accelerated toward the anode and move in a spiral path through the magnetic field. When they collide with gas molecules, positive ions are formed, which are attracted back to the negative cathodes. The steady hail of gas ions sputters the surface of the cathodes, providing fresh layers of titanium metal from which the process is repeated. Instead of taking gas entirely out of the system, ion pumps immobolize it within the sytem. This results in low pumping capacity, due to the saturation of the collecting surface. All ion pumps suffer to some extent from the same defects. They pump chemically active gases much faster than inert gases, and they emit a small fraction of the gas previously pumped. The re-emitted gas acts as in additional source in the vacuum system. If one gas is pumped initially and then a second gas is introduced, the pump will remove the second while re-emitting the first. New designs have considerably reduced this effect. Advantages of this type of pump are the ability to operate on static systems without a Backing pump, once a pressure of less than 10^{-2}mm Hg has been achieved, and the ability to operate in the absence of any working fluid.

6-37. CRYOGENIC PUMP.

6-38. Another type of immobilization device now coming into prominence is the cryogenic pump (figure 6-8). It removes gas simply by condensing it on a very cold surface. Cryogenic pumps can be used in any position, and their speed is not restricted by connecting tubing. These advantages make them particularly valuable for large space-simulation chambers. The fraction of gas molecules immobilized (sticking probability) depends upon the temperature of the surface, the nature of the gas and the nature of the surface. Pressures of about 10^{-10} mm Hg have been achieved by cryogenic pumping with liquid he-

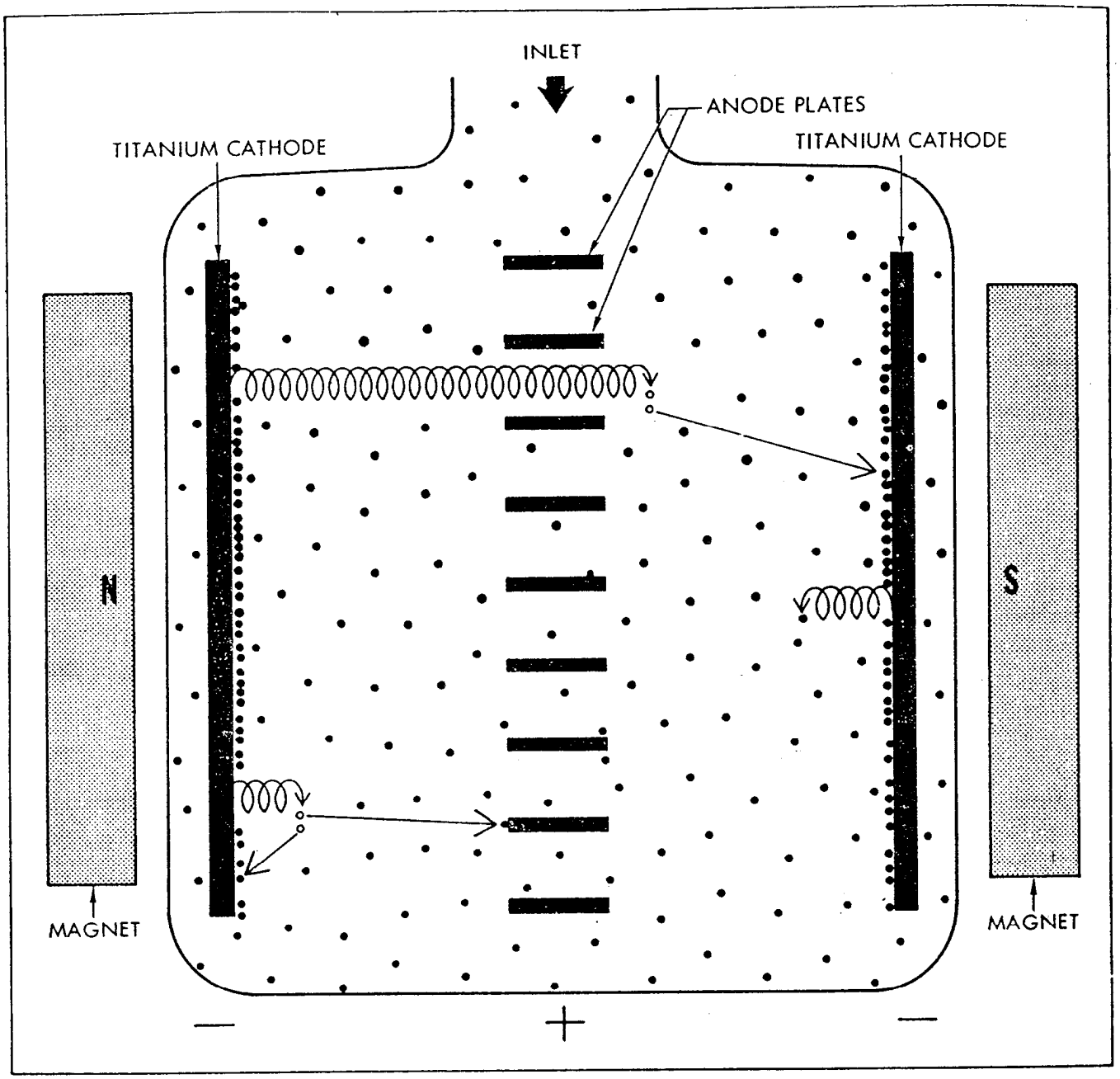

Figure 6-7. Sputter-Ion Pump

lium. It has been calculated that pressures in the order of 10^{-30}, mm Hg may be obtainable by using a combination of other pumping methods with cryogenic pumping.

6-39. TYPICAL VACUUM PUMPING SYSTEM.

6-40. Figure 6-9 shows the layout of a typical small vacuum pumping system. Larger system may include a Roots-type blower delivering into the inlet of the mechanical pump, and a cold trap between the diffusion pump and the vacuum chamber. At the beginning of the pump-down cycle, the diffusion pump is isolated from the atmosphere by closing the high-vacuum valve and the foreline valve. The mechanical pump rough-pumps the system through the roughing line until the pressure is reduced to a level where the diffusion pump can be used. At this point the roughing valve is closed and the high-vacuum valve and foreline valves are opened. If the operating cycle is so long that the time required

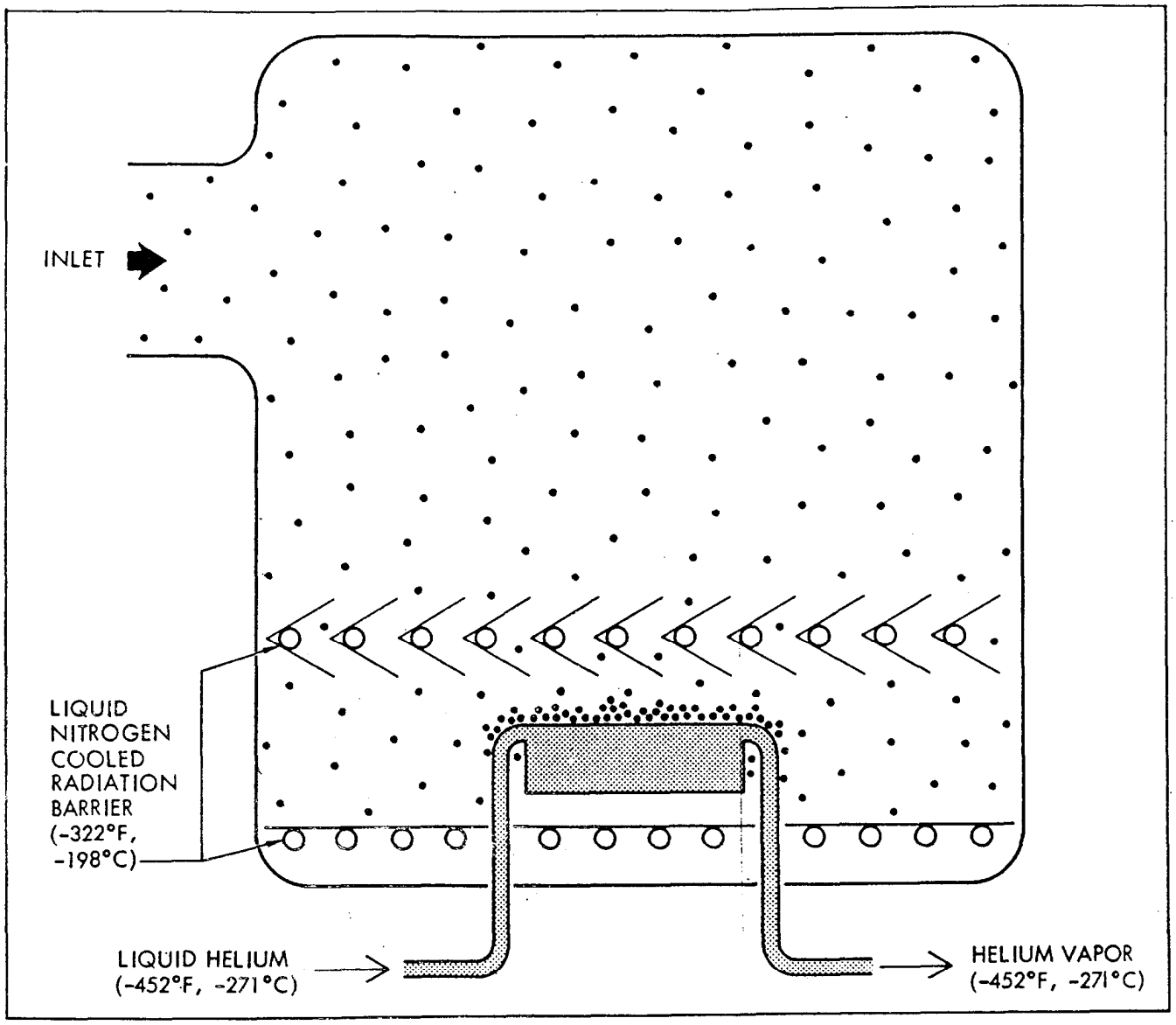

Figure 6-8. Cryogenic Pump

to heat and cool the diffusion pump during each cycle is unimportant, a more simple installation can be made by eliminating the roughing line. The system is then rough-pumped through the diffusion pump.

6-41. VACUUM VALVES.

6-42. GENERAL.

6-43. Because of the special, and sometimes extreme requirements of a vacuum system applications, vacuum valves (figure 6-10) differ from more conventional valves in the following characteristics:

a. Freedom from leakage.

b. Minimum flow resistance.

c. Absence of outgassing.

6-44. Valve leakage can commonly occur at the stem, between the bonnet and body, and across the seat. The stem seal is usually most troublesome. Conventional packing on stems has been proven entirely unreliable from a leakage standpoint. Channels ultimately are formed in the packing by cycling of the stem. In addition, the packing may outgas considerably. Vacuum

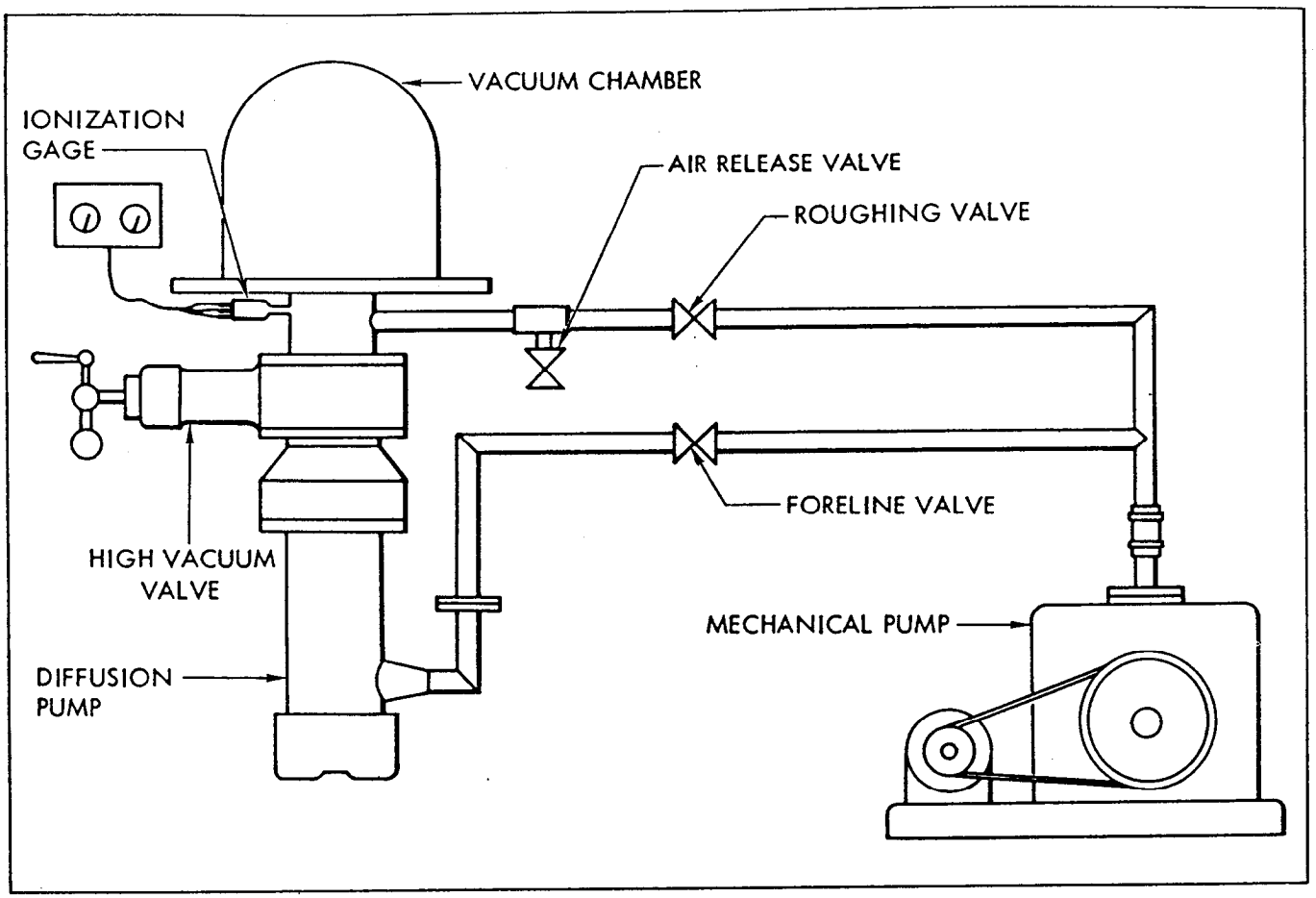

Figure 6-9. Typical Vacuum Pumping System

valves use either a bellows, an O-ring, or a diaphragm as a stem seal. Of these, the bellows provides the only positive seal, in that it does not depend on the sealing action of a plastic material. It has been found that O-rings are leak-free, provided that only rotational motion of the stem occurs. Any translation of the stem, either in or out, produces a slight leakage. Diaphragms may be of metal or of elastic material. When materials like rubber are used for the diaphragm, the stem seal will usually be leak-free. The bonnet-body seal presents little difficulty, provides resilient gaskets are used. With progressively harder materials, such as teflon, Kel-F, and metals, large forces are required for adequate compression. Regardless of gasket material, mating surfaces need to be machined smooth and to be free from scratches, defects or foreign particles.

6-45. In a conventional valve, absence of excessive pressure drop through the valve is ensured if full area, equal to the port area, is maintained through every section of the valve. This design rule is only a minimum criterion for vacuum valves. Obstructions in the line of flow should be absent, and the valve port should be completely uncovered. The latter requires a stem lift approximating the diameter of the port.

6-46. In most engineering applications, the mass flow of gas through a valve is high compared to that occurring in even moderately evacuated systems. For this reason, the use of sealing and lubricating greases and of organic sealing materials is practical for commercial valves, through all of these materials generally contain volatile components. In vacuum systems, however, the outgassing of these volatiles may contribute a large amount of gas in proportion to other gases in the system, and thereby impose an additional load on the pump, which makes evacuation very slow. Greases are used sparingly, or not at all, in vacuum valves, and, where used, are special

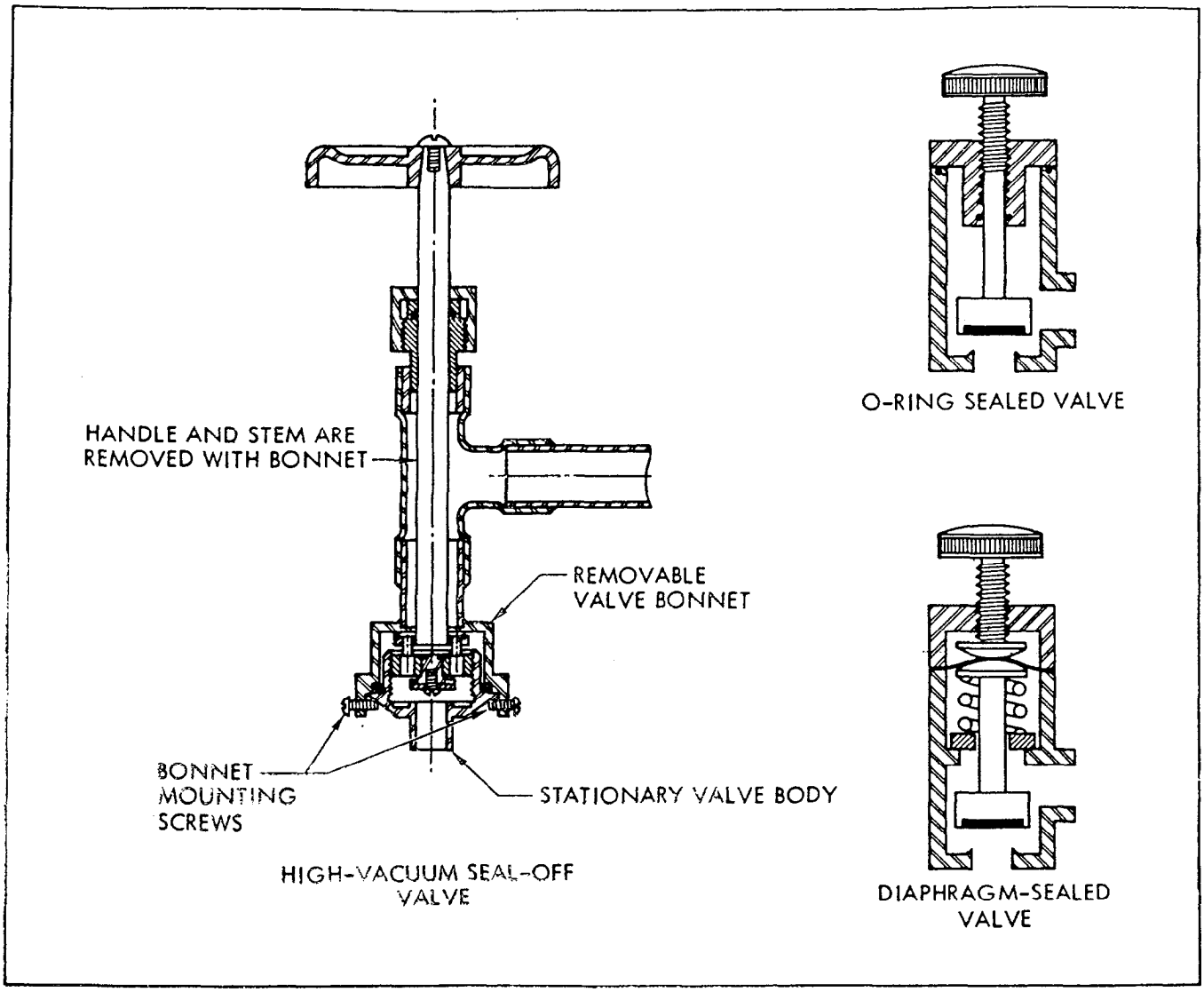

Figure 6-10. Vacuum Valves (Sheet 1 of 2)

vacuum greases of low vapor pressure. Rubber-like materials, although gassy, are so efficient as sealers that they are, used in a majority of vacuum valves. Preference is given to artificial rubbers, such as neoprene and the bunas, which contain less volatiles than natural or gum rubber, and the amount of rubber used is kept to a minimum. Teflon is much superior to rubber from an outgassing standpoint, but presents some difficulties in use. Teflon, at ordinary temperatures flows slowly under an applied force unless the unit pressures are sufficient to cause a set. Consequently, teflon gaskets may have to be taken up periodically, or the valve design must be such as to automatically take care of the cold-flow. Metals have very low vapor pressures and are, therefore, ideal from an outgassing standpoint. The difficulty in obtaining leak-free joints with metal gaskets removes them from consideration in most applications. Special valves have been designed, however, that are all metal in construction. These permit attainment of the lowest pressures.

6-47. VALVE TYPES.

6-48. In terms of function, the most common types of valves are high-vacuum valves, which are used to direct the flow of gases through the pumping system, and air release valves, which admit air to the vacuum chamber or manifold after the process has been completed. Less

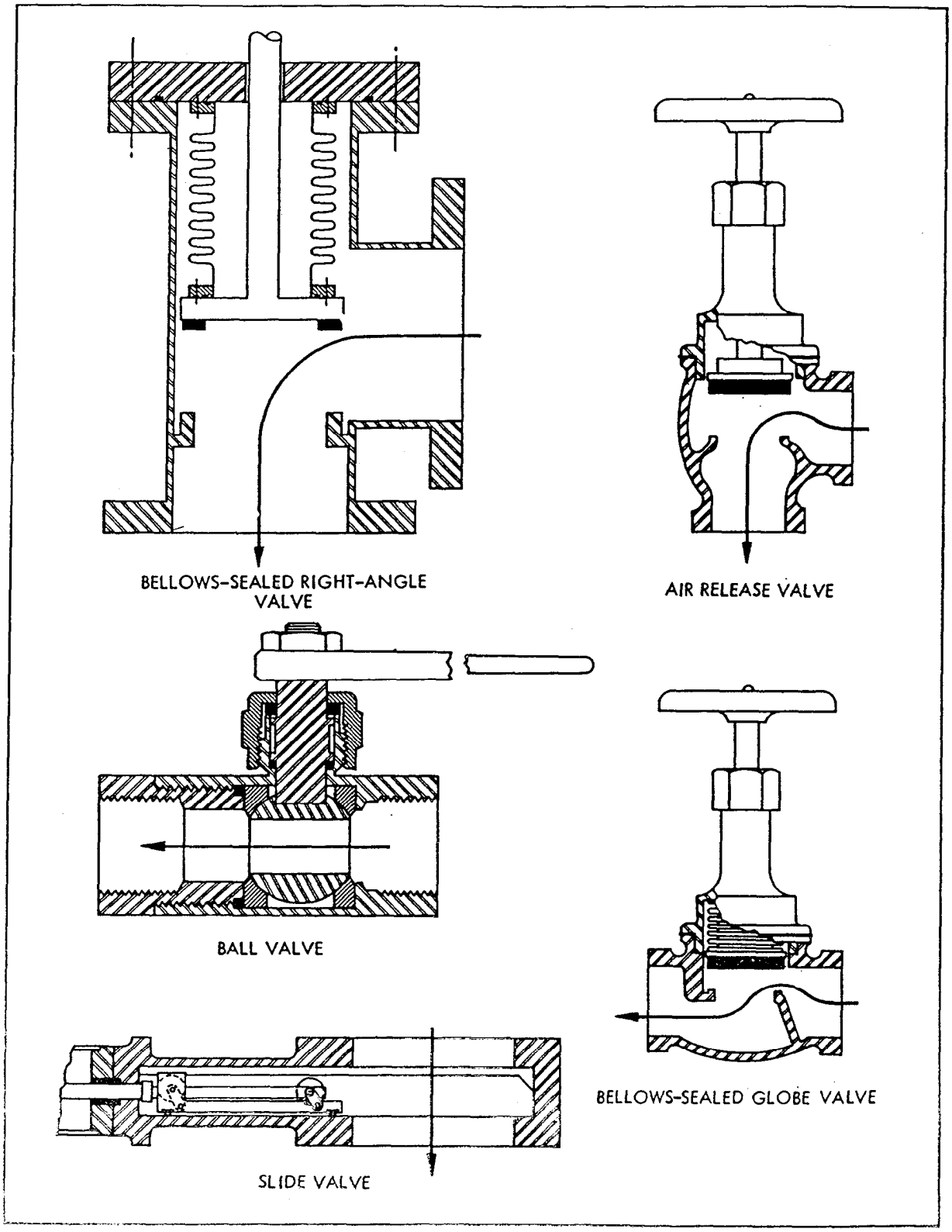

Figure 6-10. Vacuum Valves (Sheet 2 of 2)

common valves are throttling valves, which control the rate at which gas flows, and airlock valves, which permit the passage of process material. To meet requirements of geometry and gas flow, a variety of valve configurations and constructions is available. Among these are cast bronze angle and globe valves, both with and without bellows seals, fabricated steel angle valves with O-ring seals, ball valves, and slide valves. Most of these are available for either air or manual operation.

6-49. High-vacuum valves are most often found in a high-vacuum pumping system. Such a system usually includes a mechanical pump to rough-down, or reduce pressure from atmospheric to about 200 microns, and a diffusion pump to reach lower pressures. At the beginning of a cycle, the diffusion pump is isolated from the atmosphere by closing the high-vacuum valve and the foreline valve (figure 6-9). The roughing valve is then opened, and the mechanical pump is started. When the mechanical pump has roughed-down the system through the roughing line to a point where the diffusion pump can be used, the high-vacuum and foreline valves are opened, and the roughing valve is closed. Because these valves are under vacuum when they are open as well as when they are closed, they must be vacuum tight in all positions. This means that a vacuum-tight seal is required around the valve operator. The two most common ways of sealing the operator are by a bellows or O-ring. Generally, bellows are used on small valves, and O-rings on large. Both are satisfactory for the majority of applications. For ultra-high vacuum work and for systems containing radio-active or poisonous materials, bellows are preferred.

6-50. Cast bronze or fabricated brass valves are commonly used on vacuum lines three inches or less in diameter. Both globe and angle valves are available with bellows stem steals. These are manufactured with both air and hand operators, and can be furnished with screwed or flange connections.

6-51. Slide valves are used in sizes ranging from two or 32 inches where 100 percent clear-flow cross section is required along with a short distance between flanges. They are available for hand or air operation up to 10 inches in size, and for air operation only in larger sizes.

6-52. Ball valves are used in sizes of three inches and less where straight-through unimpeded flow is desired. They are available for air or hand operation, and with screwed or flanged connections.

6-53. Large fabricated steel valves are available in sizes from six inches to 36 inches with air operator and flange connections. They are commonly used where an elbow would be required to connect the diffusion pump to the vacuum chamber. Because they substantially reduce back migration of diffusion pump fluid they often eliminate the need for a separate baffle or trap.

6-54. Air release valves are used to admit air to the vacuum system after the process has been completed. Air is surprisingly heavy. Its force on an evacuated bell jar 10 inches in diameter is more than half a ton. This pressure must be equalized before a vacuum chamber or air lock can be opened. Air release valves are the simplest and least expensive vacuum valves because they need be air tight only when closed. Globe and angle valves without stem seals and ball valves are commonly used for this purpose.

6-55. Throttling valves are used to control the rate of gas flow in order to program or stabilize the pressure in vacuum systems. Ordinarily, an adjustable, controlled leak is employed to meter gas into the chamber, while the throttling valve controls the rate at which the pumping system removes the gases. For large systems, a throttling valve can be used in parallel with a larger high-vacuum valve. Any standard angle or globe high-vacuum valve can be modified to serve as a throttling valve by substituting a tapered plug for the standard disk. Usually, an air motor is used to position the plug, but the valve can also be made up for hand operation. Fully closed, such valves are as vacuum-tight as conventional valves.

6-56. Airlock valves are used in conjunction with continuous or semicontinuous vacuum processes to permit the introduction and removal of material or instruments while the system remains under vacuum. Usually, slide or ball valves

are employed because they offer a convenient straight-through path. Occasionally, angle valves are used in connection with a through feeder to introduce granular charge material.

6-57. The ultimate vacuum attainable with a valve depends upon the following variables:

a. The effective pumping speed at the valve.

b. The rate of outgassing of the valve and associated vacuum system.

c. The rate of leakage through the valve and vacuum system.

The ultimate vacuum will be determined by the balance between pumping speed against outgassing and leakage. Generally, the outgassing is known only approximately and the leakage not at all. Leakage can be eliminated by proper testing methods and repair of any leaks found. If leakage is assumed absent, some broad statements can be made that are useful for a rough estimate of ultimate vacuum. A packless valve containing a minimum of exposed rubber will permit evacuation to about 10^{-5} mm Hg. Where large areas of rubber are used, as in some diaphragm valves, a pressure of 10^{-4} may be expected. The use of teflon gaskets make possible ultimates of approximately 10^{-7}. Metal gaskets, such as lead, presumably place no practical limit on the ultimate vacuum, which is then determined by the pumping system. In all cases, the ultimate will be reached sooner and will be lower if the valves and system are baked out at elevated temperatures. The bakeout temperature is limited by the type of gasket material.

6-58. VACUUM GAGES.

6-59. GENERAL.

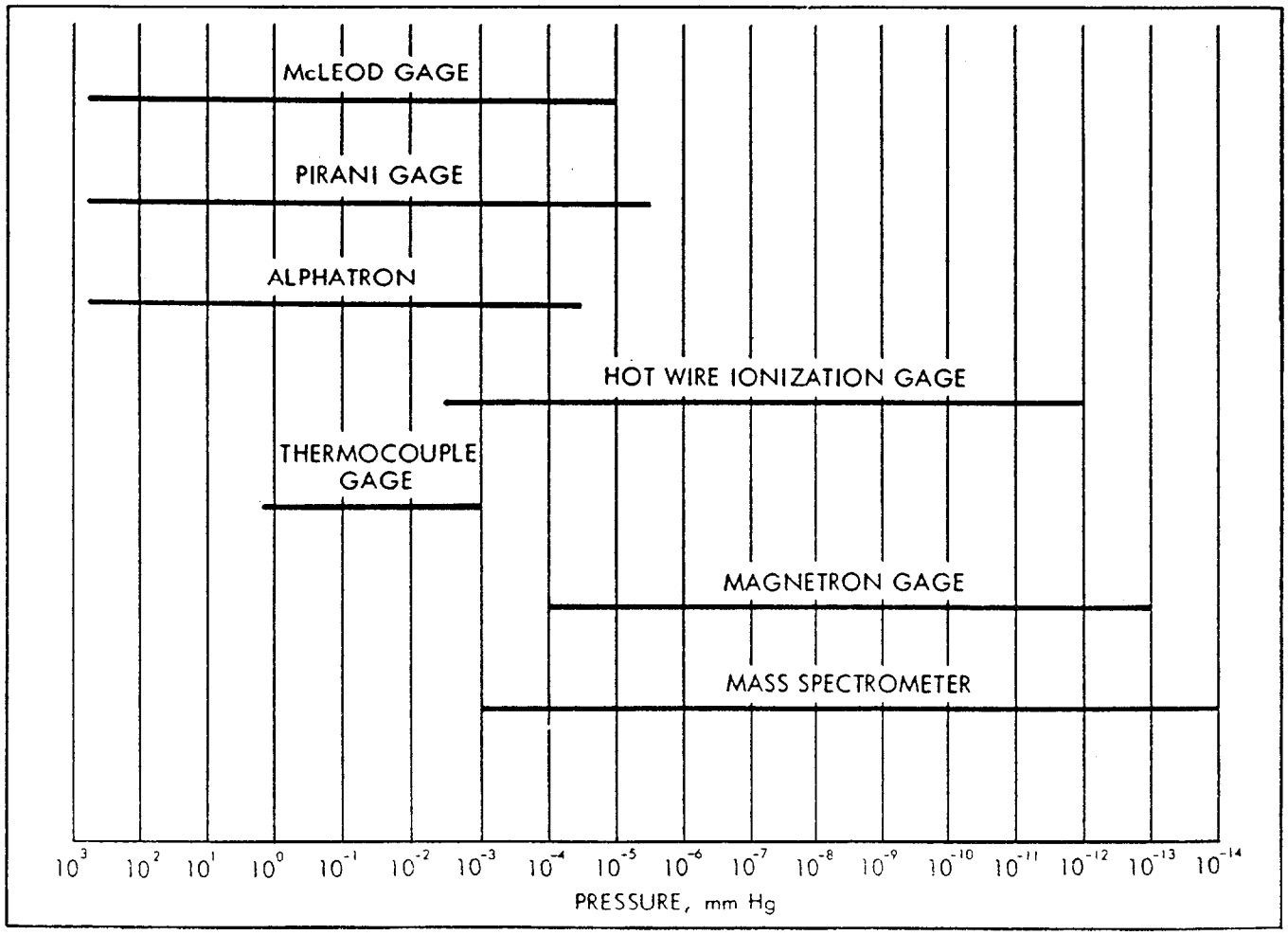

Figure 6-11. Ranges of Measurements for Available Vacuum Gages

6-60. The selection of a vacuum gage is dependent upon use, sensitivity, and pressure range. Paragraphs 6-61 through 6-78 describe available gages, their use, and their capabilities. Refer to figure 6-11 for pressure ranges of available vacuum gages.

6-61. MECHANICAL GAGES.

6-62. The most straightforward way to measure low pressures is by the deflection of a mechanical member, such as a diaphragm or bellows. The devices have been used very successfully down to absolute pressures of about 10^{-1} mm Hg. With the aid of sensitive electrical pickups, measurements as low as 10^{-4} mm Hg have been made on the deflection of a diaphragm. The limiting factor in mechanical gages is the nonreproducible metallurgical characteristics of the parts (hysteresis effect) when very small displacements are measured. Mechanical gages also generally do not have a linear electrical output for meter-display recorder use in control actuation. On the other hand, mechanical devices have the major advantage of being independent of gas composition. Varying sensitivity to different gases is a major problem with most vacuum measurement systems.

6-63. MANOMETERS.

6-64. Manometers are as commonly used for pressure measurement as are the mechanical gages. A mercury U-tube manometer can be used down to 1 mm Hg without difficulty. Oil-filled manometers are being used with great precision down to pressures approaching 10^{-6} mm Hg by using an interferometer to measure the liquid level in a large diameter column. Two disadvantages of manometers are: conversion of the pressure reading to a linear electrical signal is difficult, making remote indication and recording difficult, and the vacuum system may become contaminated with the manometer fluid. The extreme simplicity of these devices is a major advantage. Because the manometer is an absolute pressure gage, several methods of increasing its sensitivity have been devised. The most valuable of these is the McLeod gage (figure 6-12). It is widely uses as the sole pressure-measuring device in some vacuum systems, but its most important current application is for the calibration of secondary gages. Its principle of operation is based on trapping a known volume of gas at the prevailing system pressure, and compressing this known volume into a capillary tube with a mercury column. Knowing the initial and final volumes and the final pressure, the initial system pressure can be computed. The lower operating limit of this gage is about 10^{-5} mm Hg, and care must be taken to use it only on noncondesible gases.

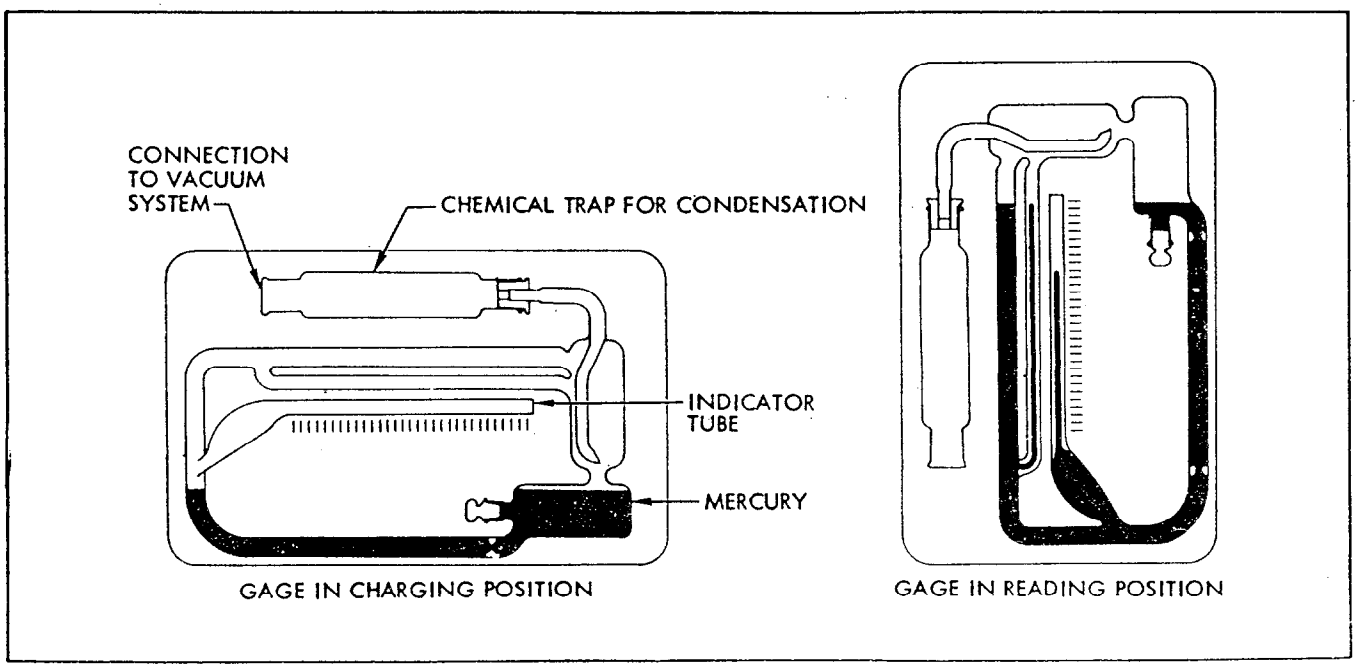

Figure 6-12. McLeod Vacuum Gage

The use of this gage is generally limited to calibration work because it cannot be operated continuously or in conjunction with a recorder.

6-65. THERMOCOUPLE VACUUM GAGE.

6-66. Pressure measurements in the 1 to 10^{-3} mm Hg range are most frequency carried out with thermal conductivity gages. These measurements are based on the fact that the conductivity of most gases in the range between 10 and 10^{-3} mm Hg is strongly pressure dependent. At pressures below 10^{-3} mm Hg there is so little free conduction that radiant heat-transfer processes, which are not pressure dependent, dominate the heat transfer. The thermocouple vacuum gage (figure 6-13) in its simplest form consists of a heating element attached to a

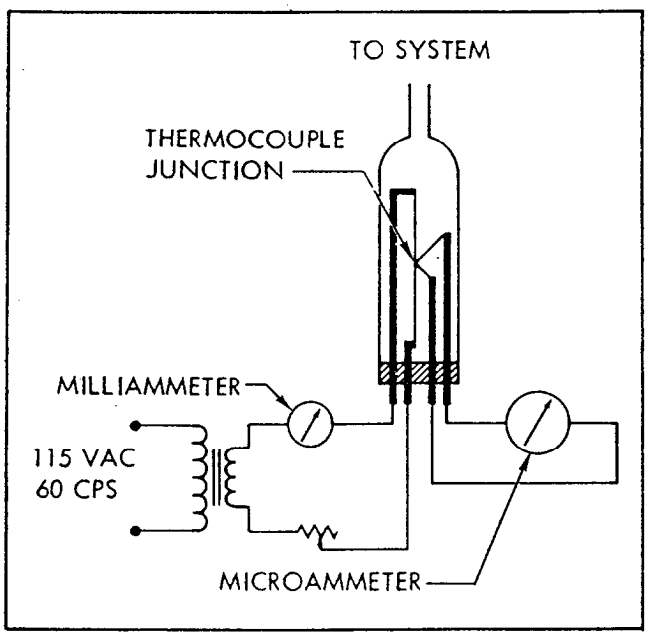

Figure 6-13. Thermocouple Vacuum Gage

thermocouple, both of which are mounted in a tube that is placed in the vacuum being measured. Since the junction of the thermocouple is cooled by thermal conduction of the gas, the current indicated will be a measure of the pressure. The thermocouple output is in the range of a few millivolts. This type of gage is used extensively to measure the pressure produced by the mechanical pump of a vacuum system. It is simple, rugged, easy to use, and its pressure range is suitable for this application. The major advantage of this type of gage is its reliability, disadvantages are sensitivity to gas composition and a very non-linear characteristics.

6-67. PIRANI VACUUM GAGE.

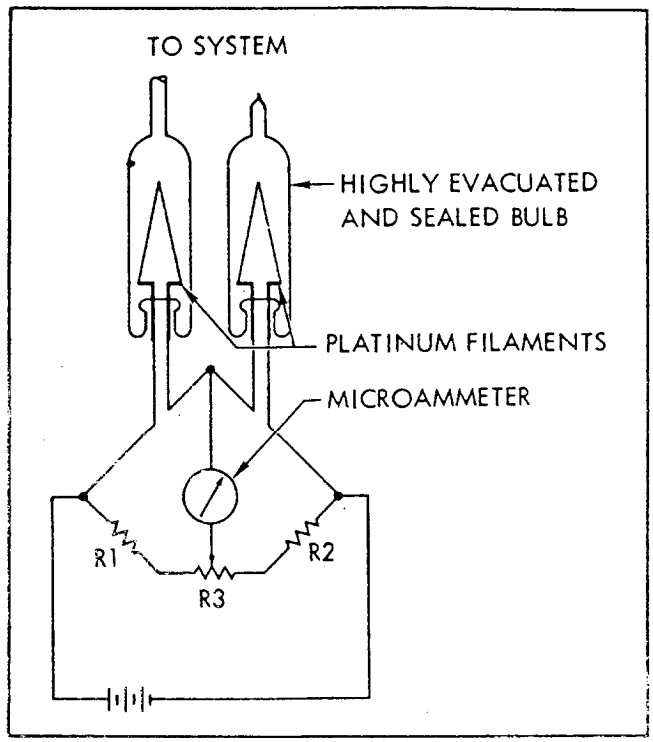

Figure 6-14. Pirani Vacuum Gage

6-68. Somewhat higher precision can be obtained with a Pirani gage (figure 6-14). It is also a thermal conductivity measuring device but the location of its sensing element in a balanced bridge circuit permits higher accuracy readings. The current through the platinum filaments is sufficient to raise their temperature to about 257°F (126°C). With a high vacuum in both bulbs, R_3 is adjusted until the bridge is balanced and there is no current through the meter. Calibration depends upon the thermal conductivity of the gas being measured. Since at low pressure the thermal conductivity of a gas is pressure-dependent, the meter indication will be a measure of pressure.

6-69. HOT-WIRE IONIZATION VACUUM GAGE.

6-70. The hot-wire ionization vacuum gage (figure 6-15) is widely used in the range below 10^{-3} mm Hg. It operates on the principle that the number of ions formed by a constant electron

stream in a low-pressure environment will be proportional to the number of gas molecules present, that is, proportional to gas density and gas pressure. A hot filament is employed to emit electrons, which are then accelerated by a potential of about 150 volts dc on the anode.

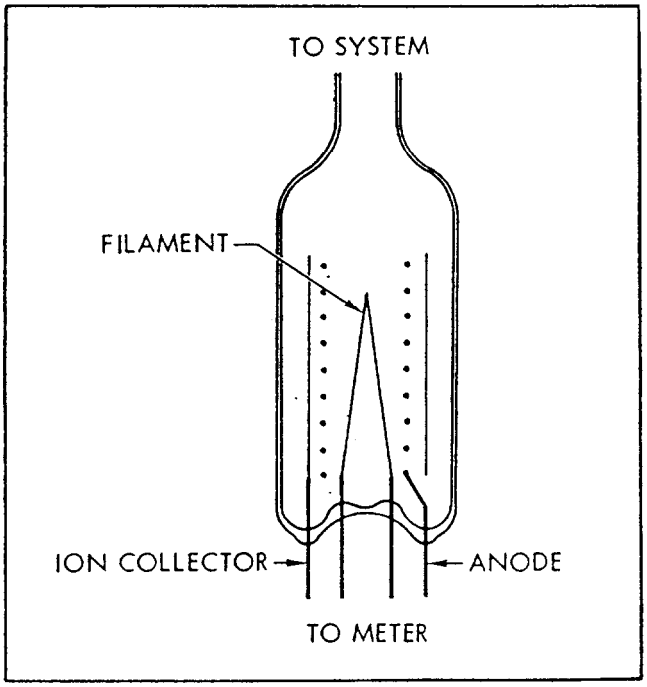

Figure 6-15. Hot-Wire Ionization Vacuum Gage

The electron current is held constant by a precis regulating network. An electrode held at about -20 volts dc is then used to collect the positive ions formed when electrons collide with the neutral gas molecules in the volume. The conventional hot-wire ionization gage can be operated down to about 10^{-7} mm Hg. The sensitivity of such an ionization gage, when expressed in ion current per unit electron current per mm Hg, is of the order of 20 per mm Hg. The lower limit of 10^{-7} mm Hg is set by an X-ray effect, which gives an electrical signal very similar to that caused by an ion current, but which is not pressure dependent. This effect is proportional in magnitude to the size of the ion collecting electrode.

6-71. BAYARD-ALPERT VACUUM GAGE.

6-72. The Bayard-Alpert vacuum gage (figure 6-16) is designed to minimize the X-ray effect by locating the cathode outside the anode, and by making the collector a thin axial wire. The negative charged collector still gathers positive ions but, because of its small area, intercepts fewer X-rays. This modification of the hot-wire ionization gage will measure to about 10^{-10} mm Hg and, with special designs, to the 10^{-12} mm Hg region. Hot-wire ionization gages have an electrical output that is, in general, linear with pressure. However, they are very sensitive to gas composition, and hot filament sometimes causes significant changes in gas composition between the volume being measured and the volume inside the ion gage structure. The sensitivity may vary from 0.18 for helium to 4.61 for C_3H_8 (relative to air at a sensitivity of 1).

6-73. COLD-CATHODE ION VACUUM GAGE.

6-74. The difficulties encountered through the use of a hot filament in a ionization gage can be overcome with a cold-cathode ion vacuum gage (figure 6-17). This device in its simplest form is a two-electrode structure with a high voltage applied between the electrodes, and a magnetic field extending through them. The purpose of the magnetic field is to increase the length of path of electrons traveling from one electrode to the other, thus increasing the probability of collision with a gas molecule, and causing ionization. This device is not linear with pressure and gas density and, in its conventional form, is limited to a range from about 10^{-3} to 10^{-7} mm Hg. Use of a high-strength permanent magnet may in some cases be a disadvantage.

6-75. The operating range of the cold-cathode gage has been extended to less than 10^{-12} mm Hg. This modification, known as a magnetron or inverted magnetron gage, is illustrated in figure 6-18. Electrons are produced by applying a high voltage to unheated electrodes. In such a gage, X-rays are proportional to pressure, so that no spurious currents are produced. Electrons spiraling in toward the central electrode ionize gas molecules, which are collected on the curved cathode.

6-76. Another form of ionization gage, useful from atmospheric pressure to about 10^{-4} mm Hg, employs a radioactive source as the ionizing agent. This device, known as the alphatron, is linear, stable, and has neither a hot filament nor a magnet. It probably has a wider useful range of operation than any other gage, but is sensitive to the composition of the gas being measured.

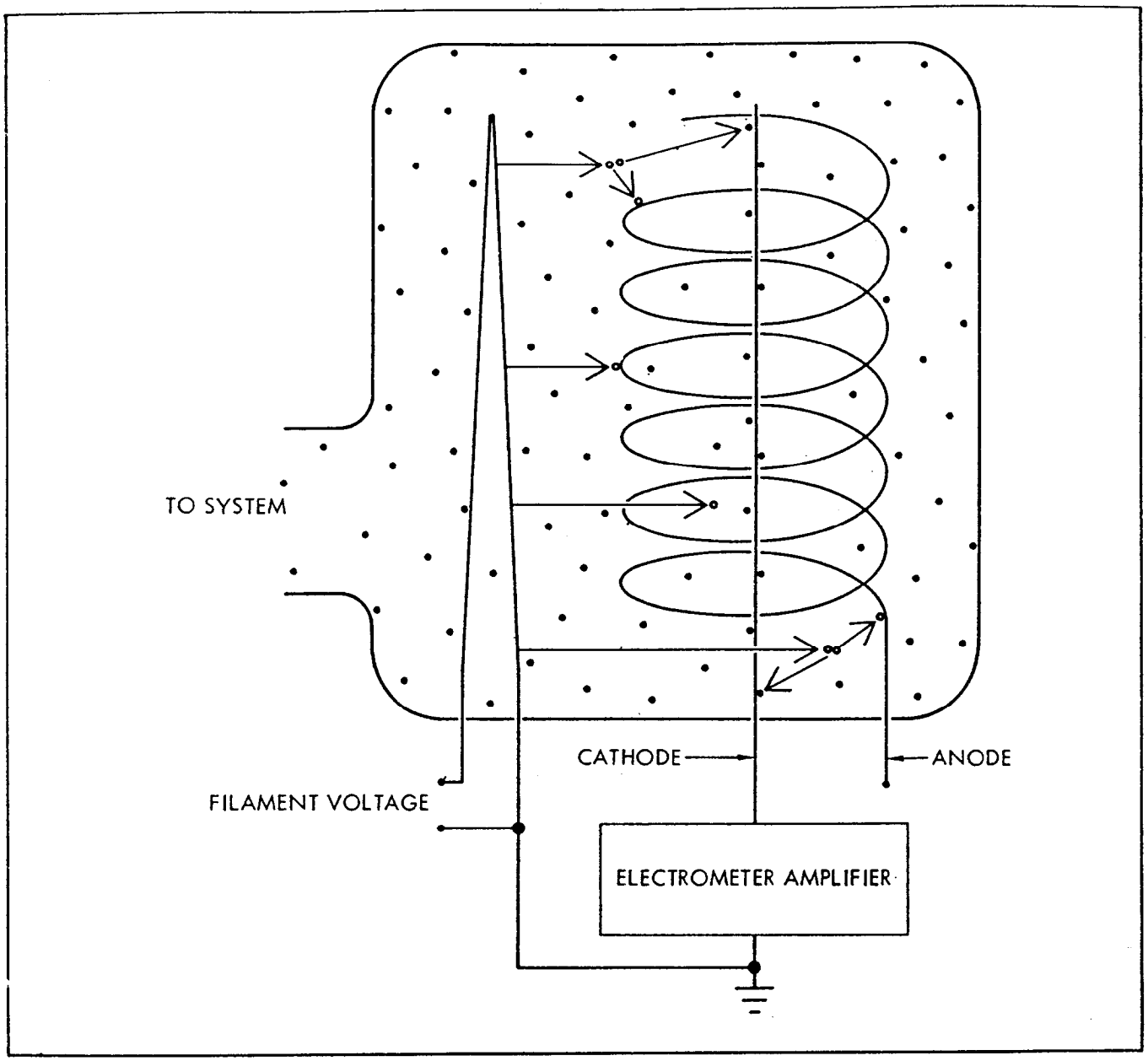

Figure 6-16. Bayard-Alpert Vacuum Gage

6-77. MASS SPECTROMETER.

6-78. In many applications it is important to know not only the total amount of gas present, but also is composition. A particular process may be extremely sensitive to minute amounts of oxygen, but may be quite tolerant to large partial pressures of inert gas. Also, leaks may be detected by introducing a tracer gas at a suspected point and measuring the amount that enters the system. Gas composition can be established throughout the high and ultra-high vacuum range by specially modified mass spectrometers (figure 6-19). An ion source, quite similar to the hot-wire ionization gage, is used in most of these devices. The ions formed are separated according to their mass-to-charge ration by accelerating them through a magnetic field. Since ions with a high mass-to-charge ratio follow a curved path with a larger radius, ions of differing masses may be directed through the slit to strike the collector by varying the magnetic

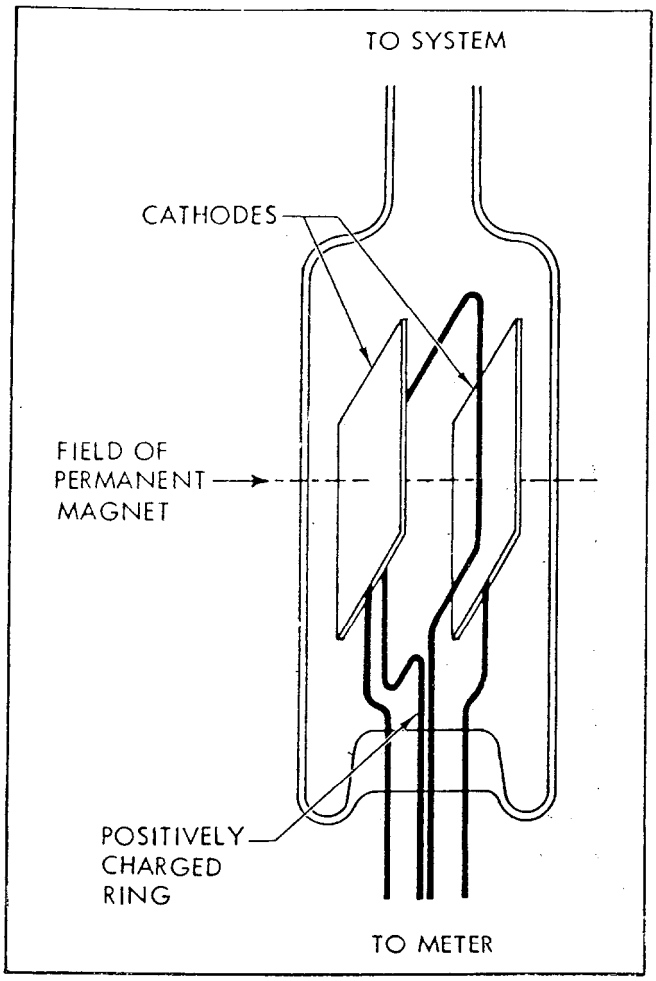

Figure 6-17. Phillips Cold-Cathode Ionization Gage

or electric field, and so measure the density of one constituent gas at a time. Partial pressures as low as 10-14 mm Hg can be measured with the more advanced types of mass spectrometers.

6-79. FITTINGS.

6-80. Fittings for vacuum systems are of two types: flanged fittings and threaded pipe fittings. They are used wherever it is required that certain parts be removed for maintenance. Flanged fittings using O-rings (figure 6-20) or gaskets (figure 6-21) are as leak tight as a welded joint if care is exercised during installation. Threaded pipe fittings (figure 6-22) are useful for making vacuum-tight joints that can be quickly and easily assembled and disassembled.

6-81. GASKETS AND SEALS.

6-82. A seal is defined as a closure effected by mechanical pressure on a deformable material. Most seals employ relatively soft gaskets between hard compression flanges. One of the most widely used vacuum seals is the O-ring, which is a rubber ring of toroidal shape that fits into a groove and is deformed sufficiently to make a leak-free seal when the flanges are bolted together. O-rings can be made of neoprene, butyl rubber, or teflon. Gaskets made of soft metals such as lead, copper, or aluminum can be used over a wider temperature range than O-rings, due to their smaller thermal expansion and contraction.

6-83. Rubber gaskets can be used to bring electrical leads into a vacuum system (figure 6-23). The wires are spaced so that they emerged between the flange bolts. Vacuum grease is applied to the rubber gaskets to make this assembly vacuum tight.

6-84. COLD TRAPS.

6-85. Cold traps prevent vacuum pump vapors from diffusing back into the vacuum area and also remove, without contaminating the pumps, any condensable vapor that may be present in the vessel being evacuated. A refrigerated cold trap (figure 6-24) of adequate condensing area, and properly located in the vacuum system, can easily increase the pumping speed for condensable vapors by a very large factor over what can be provided by using pumps alone. The effectiveness of a cold trap depends greatly upon its size and location. In many systems, the most effective position is in an enlarged portion of the pumping manifold adjacent to the area being evacuated. This position shields the vacuum area from any vapors backstreaming from the pumps. It is often advantageous to isolate the trap so that it may be warmed and the condensed vapors removed while a good vacuum is still maintained in the rest of the system. Some cold traps can be readily disassembled and cleaned by providing flanges and an O-ring seal (figure 6-25).

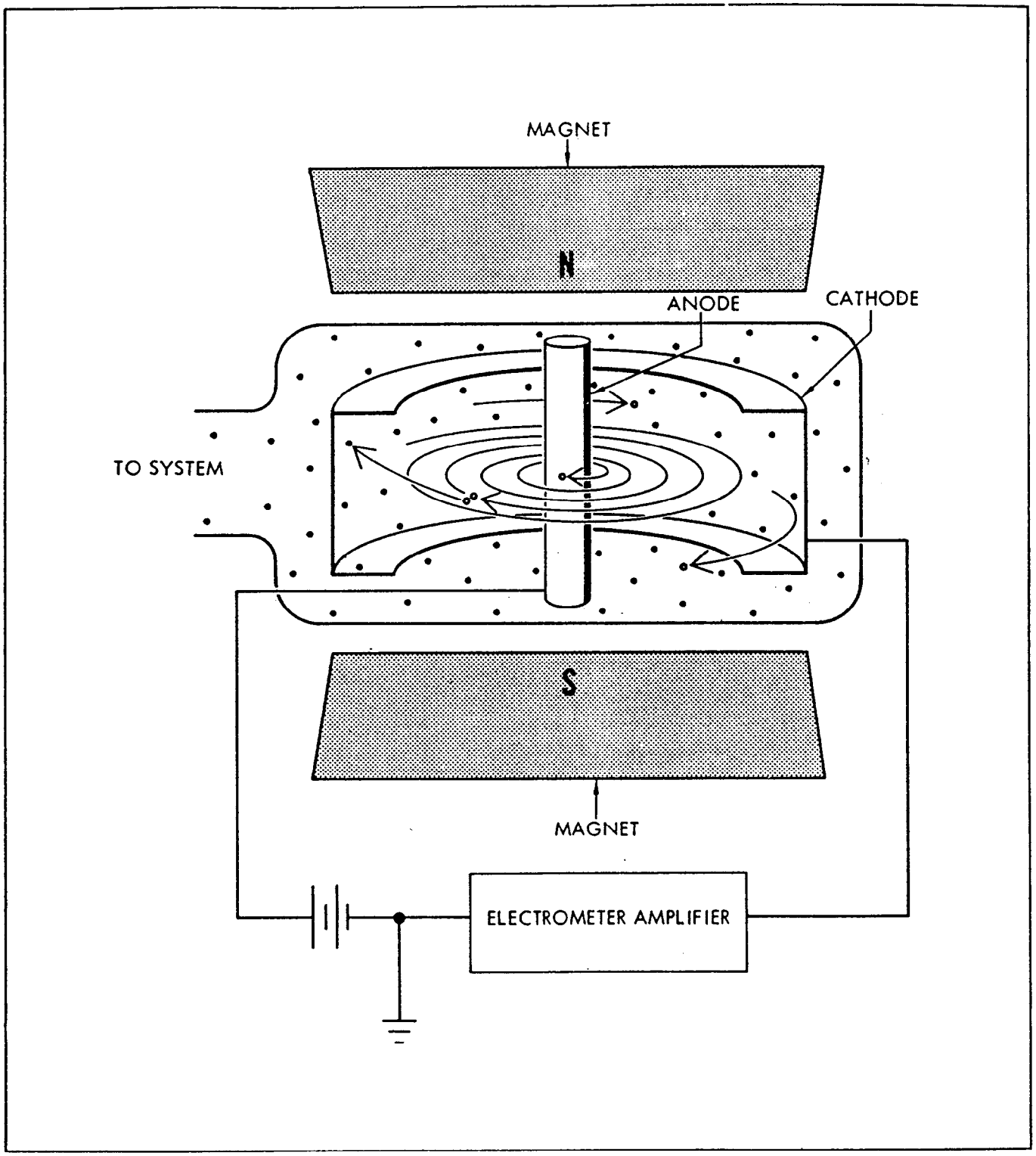

Figure 6-18. Inverted Magnetron Gage

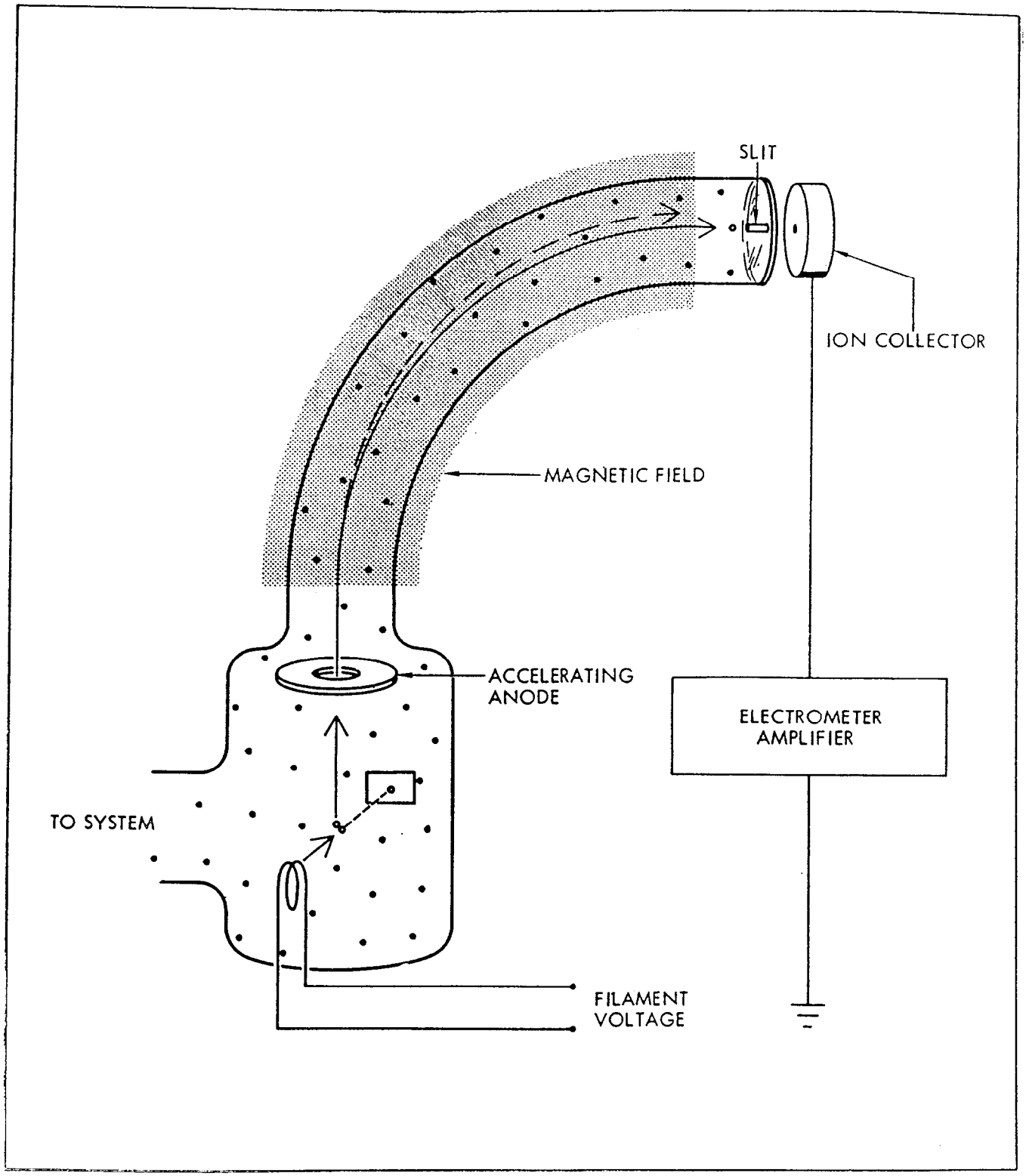

Figure 6-19. Mass Spectrometer

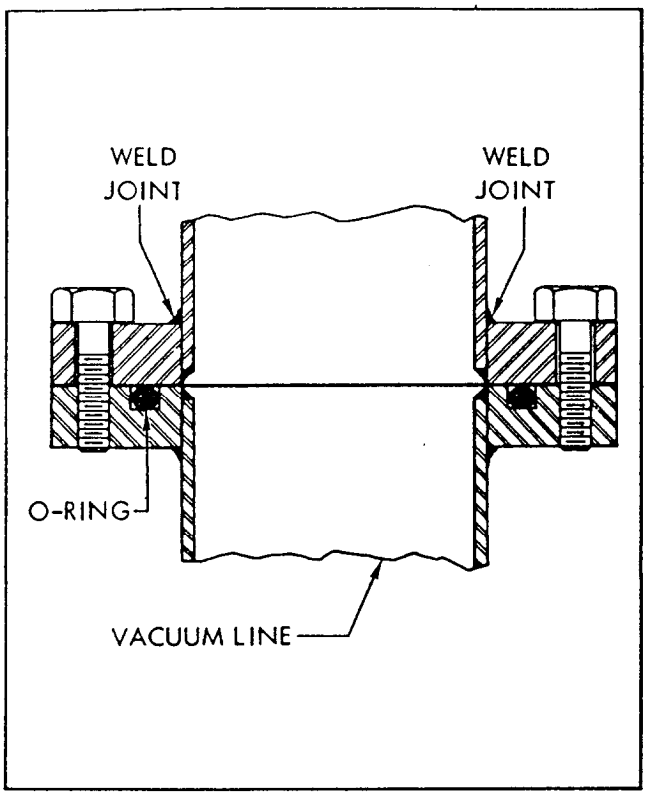

Figure 6-20. Vacuum Flanged Fitting with O-Ring

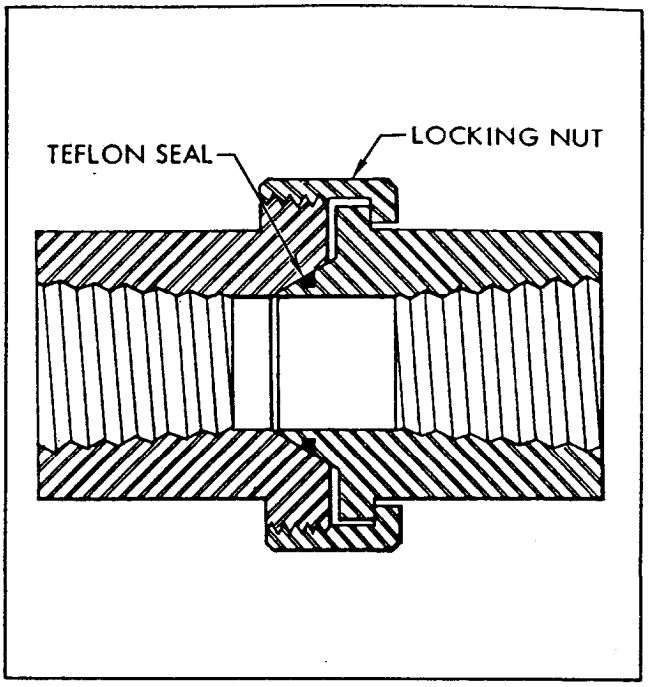

Figure 6-22. Threaded Vacuum Line Fitting

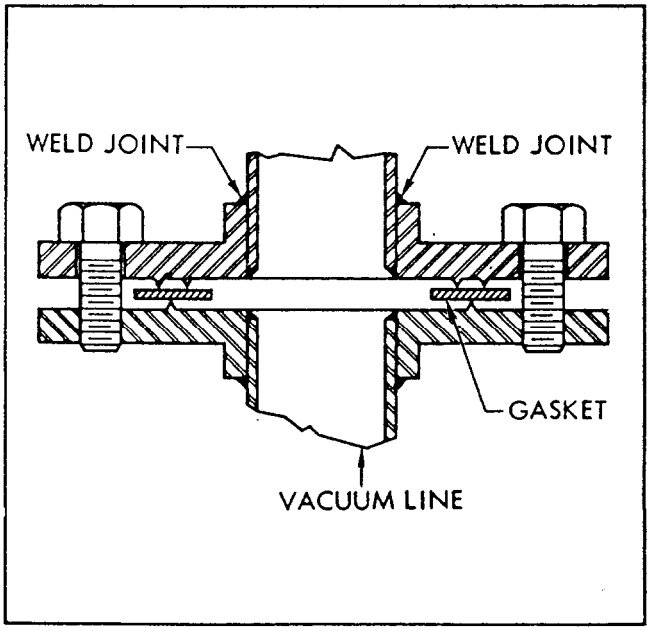

Figure 6-21. Vacuum Flanged Fitting with Gasket

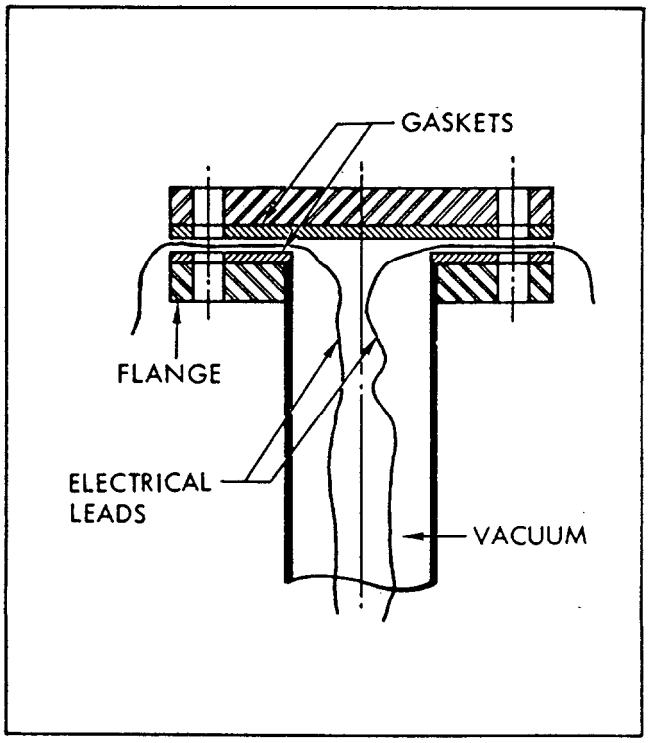

Figure 6-23. Vacuum Flange Fitting for Electrical Lead

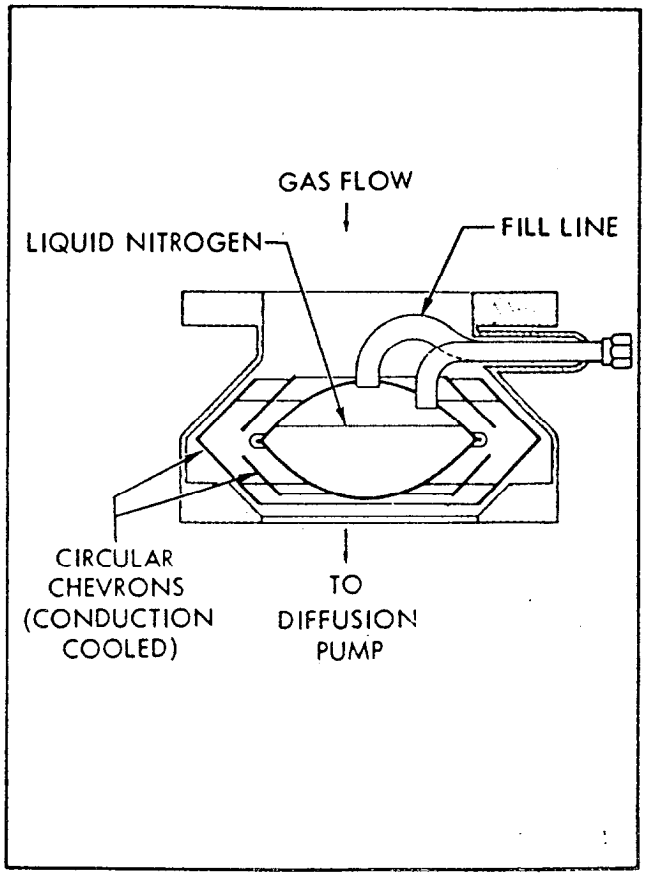

Figure 6-24. Liquid Nitrogen Refrigerated Cold Trap

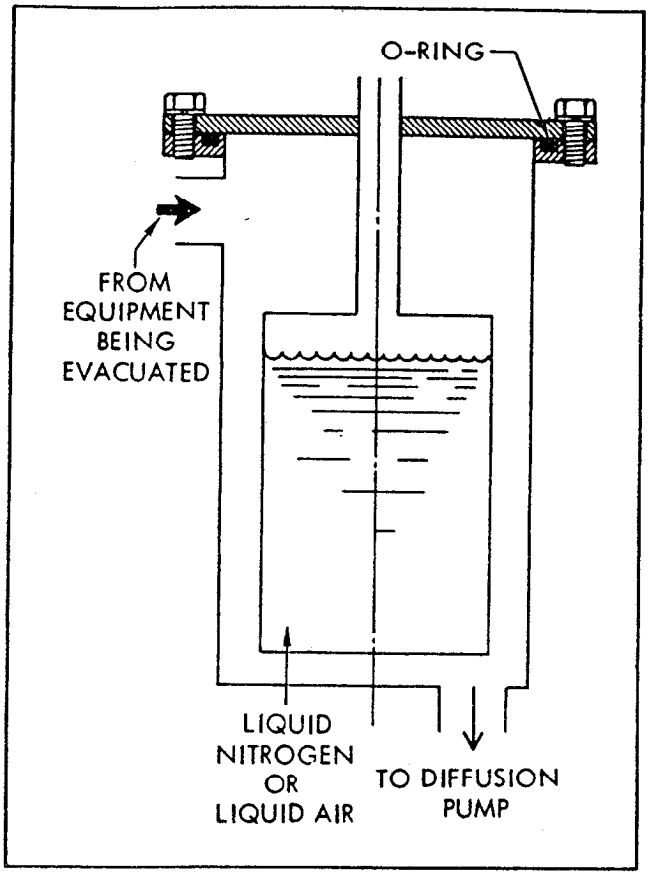

Figure 6-25. Cold Trap for Use in Vacuum Lines

CHAPTER 6

SECTION IV

FABRICATION OF COMPONENTS

6-86. GENERAL REQUIREMENTS.

6-87. A higher level of technology is required for the fabrication of vacuum system components than for components of common pressure systerns. Seams that are perfect by ordinary standards may contain minute leaks that will result in failure of a vacuum system. If possible, components of a vacuum system should be leak tested before being installed.

SECTION V

FABRICATION AND INSTALLATION OF SYSTEMS

6-88. WORKMANSHIP.

6-89. Vacuum systems required extreme care in fabrication and installation to ensure leak-free operation. It is imperative that the system be installed in accordance with drawings and specifications in the best and most workmanlike manner by qualified, careful, and efficient workers.

6-90. CLEANING.

6-91. Each component or section of a system shall be cleaned prior to installation to remove insoluble deposits that may spoil the reflexivity of surfaces and slow down evacuation.

6-92. WELDING AND SOLDERING.

6-93. The development of shielded-arc welding has made it possible to weld almost all metals. Refer to TO 00-25-224, for high-pressure and cryogenic system welding procedures.

6-94. The most versatile means of making vacuum-tight joints in metals is by soldering. Many dissimilar metals can be joined with solder and in many instances soldering is preferred to welding in joining similar metals. The parts to be soldered shall be thoroughly degreased and oxide film removed throughout to facilitate the soldering operation. Fluxes shall be completely removed after soldering to avoid corrosion, to improve the reflectivities, and to avoid sources of contaminants or dissolved gases.

NOTE

Thin stainless-steel sheet or tubing and metal bellows made of brass, bronze, or stainless steel are particularly subject to leaks caused by corrosion.

Care shall be exercised to prevent a smoky flame from the soldering torch from causing carbon deposits on interior surfaces. In cryogenic equipment using organic materials as insulating supports, care shall be taken not to overheat and decompose the supports during the soldering operation.

6-95. JOINTS AND FITTINGS.

6-96. Permanent joints in vacuum systems are made by welding, brazing, or soldering; breakable joints use fittings. Flange fittings are welded to each end of the two pipes being joined and are bolted together with a gasket or O-ring in between. (See figure 6-20 and 6-21.) A coat of vacuum grease is applied to gaskets and O-rings before installation.

6-97. It is necessary that open ends of pipes and fittings be kept capped until they are con-

nected into the system. If they are disconnected at any time, they must be capped at once. Damage to equipment can result if this is not done. Any nicks, dents, or scratches in any components that are found up to and including the time of installation shall be investigated. If judged to be serious, they shall be considered grounds for rechecking the vacuum or for outright rejection.

NOTE

Do not paint any joint or fitting until after the system has been leak-tested in accordance with paragraph 6-100.

SECTION VI

TESTING COMPONENTS AND SYSTEMS

6-98. GENERAL TEST REQUIREMENTS.

6-99. Vacuum systems require very extensive and detailed testing to eliminate the possibility of any leaks. Minute leaks that would not affect the operation of a low-vacuum system prevent attainment of the ultra-high vacuum required in some systems. When it is found that a reasonable amount of pumping will not produce an adequate vacuum in a system, it may be assumed that there is a leak. However, there are many circumstances other than leaks that will prevent the attainment of a good vacuum. A small amount of water left in the system will continue to evaporate and spoil the vacuum or, upon lowering the pressure, the water will freeze and evaporate quite slowly because of the poor thermal contact between the ice and the wall of the vacuum system. Also, the pumping system may not be functioning properly because of a contaminant, such as water, in the pump oil. The test procedures described in this section provide methods for determining whether there is a real leak or not, and how to locate it.

6-100. LEAK DETECTION TESTS.

6-101. HELIUM MASS-SPECTROMETER LEAK DETECTOR TESTS.

6-102. The most sensitive, reliable, and convenient instrument used for leak detector tests is the helium mass-spectrometer leak detector. A typical setup for leak detection is shown in figure 6-26. After the equipment being leak tested has been evacuated, helium is sprayed over the outside of the equipment. If a leak is present, helium will enter the equipment and be transferred to the mass spectrometer by its vacuum pump. The cold traps shown in figure 6-26 is provided to protect the mass-spectrometer from volatile substances that may be evolved by the test object. The mass-spectrometer indicates any helium ions present inside the equipment. Leaks as small as 10^{-10} cubic centimeters per second can be located by use of this procedures. When spraying the helium over the outside of the equipment, it is important to start at the top of the equipment because helium, being light, will rise, so that a leak may apparently be discovered at the bottom of the equipment when the helium is actually entering through a leak higher up.

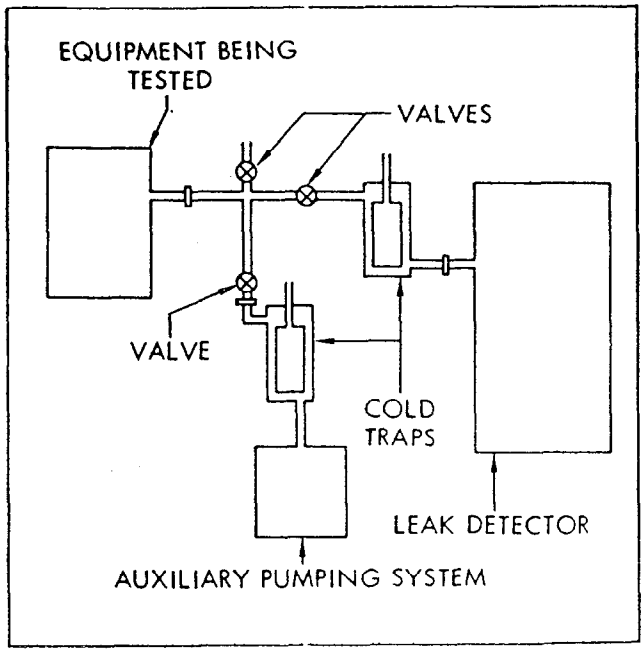

Figure 6-26. Leak Detector Test Setup

6-103. Another, more sensitive, method of using the helium mass-spectrometer is to completely enclose the equipment being tested in a hood or enclosure and fill this area with an atmosphere of pure helium. This method will not show the specific location of the leak but will localize it to a small area. A joint or suspected leak area may be tested by wrapping the joint or covering the area with a blanket or rubber or other airtight flexible materiel. Insert small tube under the blanket. Seal the edges of the blanket to the system with tape and induce helium. See figure 6-27 and figure 6-28.

6-104. The third method of using the helium mass-spectrometer is to fill the area being tested with helium at a pressure greater than atmospheric and use a sniffer probe that is connected to the leak detector. The sniffer is a fine valve at the end of a probing tube that admits gas very slowly so the leak detector can be kept in its operating range of 10-1 mm Hg. This method is not as sensitive as the two previous methods because a large amount of air is always taken into the probe along with the small amount of helium escaping from the leak.

6-105. HALOGEN LEAK DETECTOR.

6-106. The halogen leak detector is less sensitive than the helium mass-spectrometer. The test procedure is the same, except that the gases used are halogen-substituted methanes and ethanes, which are heavier than air and require that testing begin at the bottom of the equipment.

NOTE

The halogen leak detector is sensitive to tobacco smoke and some halogen vapors that may be present in the air. This reduces its sensitivity for leak testing.

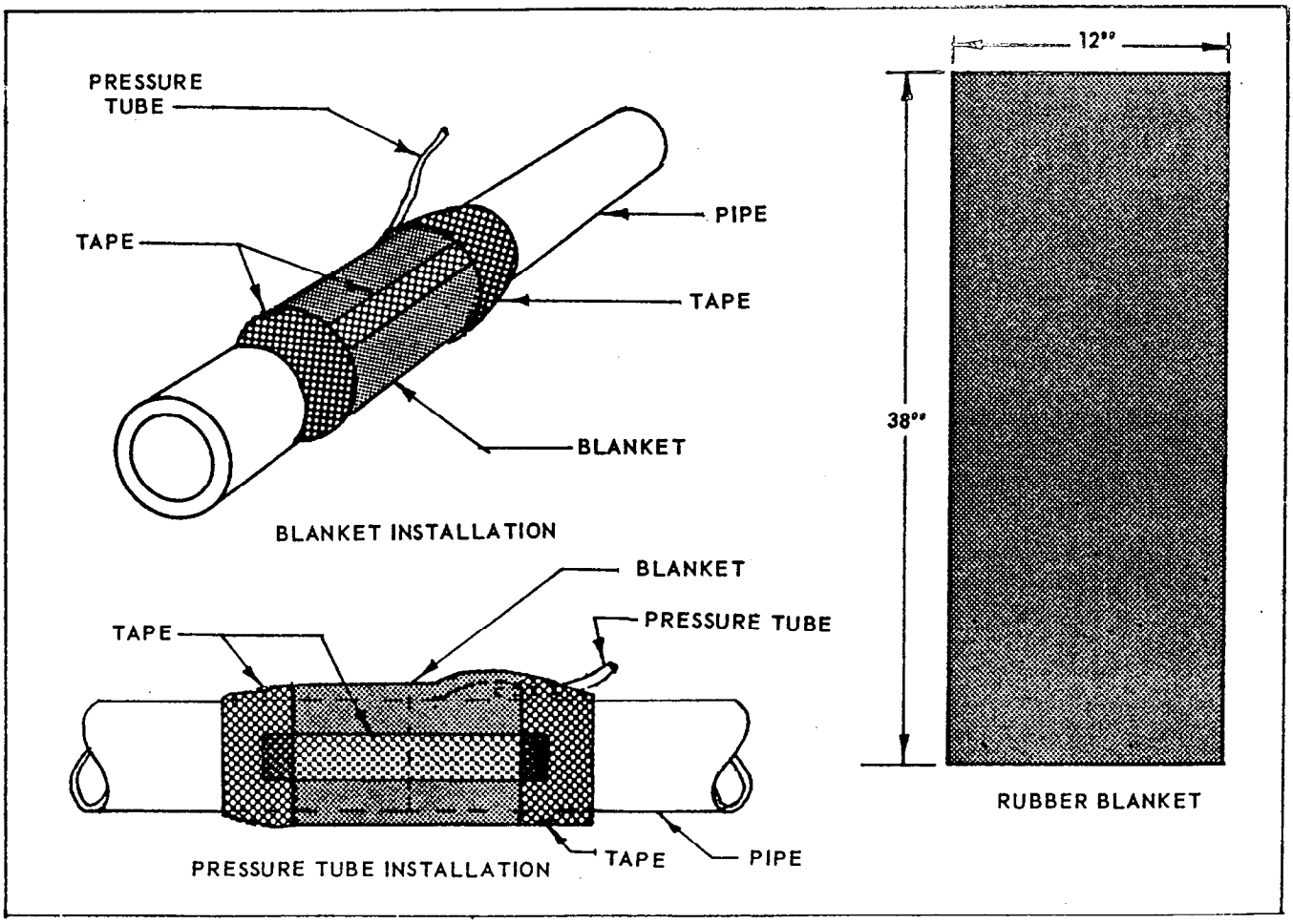

Figure 6-27. Leak Test Blanket Installation (Welded Joint).

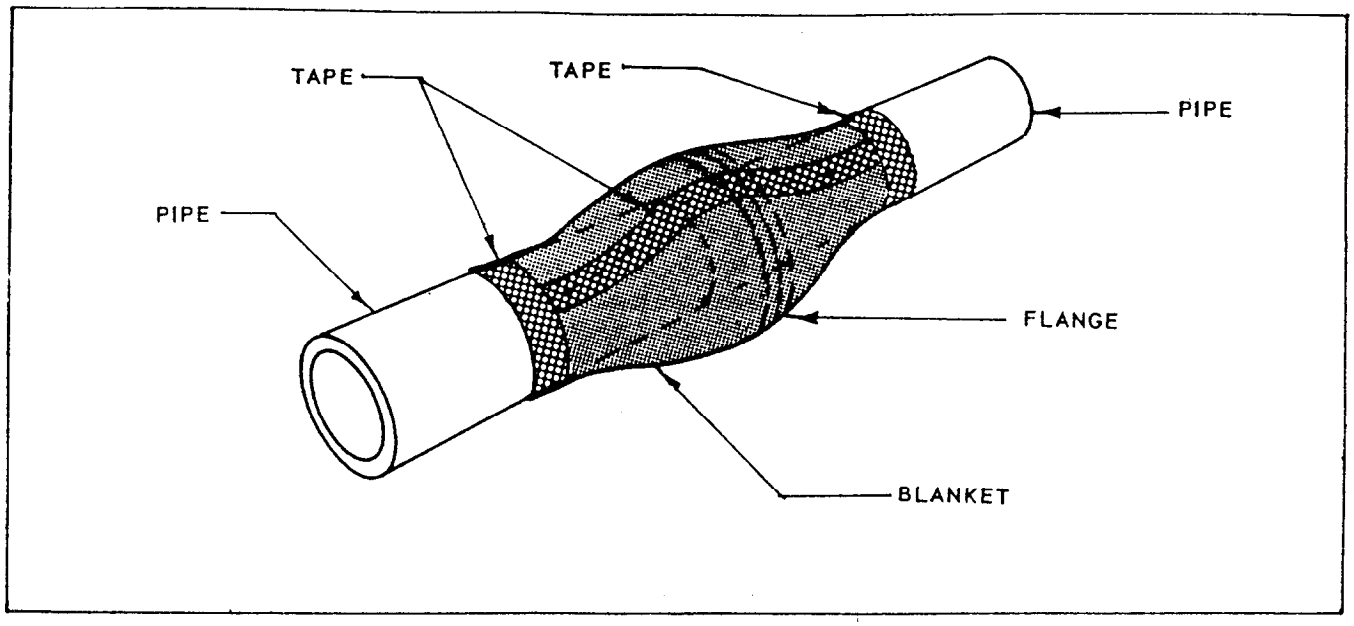

Figure 6-28. Leak Test Blanket Installation (Flange Joint)

6-107. BUBBLE TESTS.

CAUTION

Do not pressurize the system to a pressure above 1-1/2 atmospheres, or damage to the equipment may result.

6-108. To locate large leaks, pressurize the system or component with air or other gas to slightly above atmospheric pressure and immerse it in water. Gas bubbles from the leak show its location. Some small leaks can be located this way by close observation. Absorbent material soaked with trichloroethylene may be wrapped under the blanket instead of inserting halo-generated compounds through the tube.

NOTE

Make sure that the surface being tested is free of trapped bubbles, or bubbles from the air coming out of solution with the water.

If the system or component cannot be immersed in water, paint the outside surface with a soap solution. This is not as reliable, as some areas may be missed.

NOTE

Clean surface in the area to be tested before applying soap solution. The presence of oil films or small amounts of soldering flux will destroy the bubble-producing quality of the soap solution.

Very large leaks are sometimes missed by the soap solution test because a bubble will not form across a high-velocity gas jet. In this case, hold a flame close to the surface of the area being tested and observe for wavering that will occur when the flame approaches a leak.

6-109. LOCATION OF LEAK BY ISOLATION.

6-110. In a vacuum system consisting of different regions that can be valved off one by one from the pumping system, the section of the system responsible for the leak can be located by observing the vacuum attained by the pump. The vacuum will decrease when the leaking section of the system is connected to the pump. This procedure only narrows the search to a general area. Further testing by one of the other methods is required to isolate the leak.

6-111. SPARK COIL METHOD OF LEAK TESTING.

6-112. When the pressure in a vacuum system is between 0.05 and 100 mm Hg, the gas will support a glow discharge from a high-potential electrical source. If the system consists wholly of glass, the discharge can be produced by passing the ungrounded electrode of a small Tesla coil

over the outside of the glass. When the electrode approaches a hole in the glass the spark will be seen entering the hole, concentrating the discharge at that point.

6-113. The spark coil can also be used to maintain a continuous discharge in a glass part of the system located at the input to the pump. The color of this discharge will change upon contact with an organic liquid such as alcohol. By painting the outside surface of metal parts of the system with alcohol, leaks can be located when the color of the discharge from the coil changes.

6-114. OVERALL TEST FOR JOINT LEAK.

6-115. A joint suspected of leaking may be tested using the following method. Wrap entire joint with a blanket of rubber or other airtight flexible material. Seal ends to pipe and the seam with airtight adhesive tape. Allowing sufficient time for evacuation of air within the blanket, observe the system vacuum gage. An increase in the vacuum will indicate there is a leak in the joint.

6-116. A leak may also be detected by a pressure method similar to the vacuum method in paragraph 6-115. The joint is prepared as described in paragraph 6-115, except that a tube is inserted through the joint in the blanket to allow the insertion of gas. Sufficient gas is applied to slightly inflate the blanket. A decrease in vacuum will indicated there is a leak in the joint.

6-117. ISOLATING LEAK IN JOINT.

6-118. High Pressure Air Method. This method consists of blowing high pressure air onto the outside of the joint. A small, sharp air jet is pressed slowly over the suspected area. When the jet encounters the leak a slight increase, caused by a higher leakage rate, can be detected on the gage and the leak located exactly. Normal shop air pressure may be used for this test.

6-119. Vacuum Method. For this method a source of vacuum is required. A vacuum line, small vane pump or water injection pump are all adequate for this purpose. A hose of appropriate size is connected to the vacuum source; the other end of the hose is pressed against the joint to create a small area of reduced pressure. If a leak is in the area covered by the tube, an almost immediate improvement in the system vacuum will result, thus exactly locating the leak.

6-120. LEAK TESTING AN O-RING.

6-121. A suspected leaking O-ring may be tested by the method shown in figure 6-29, where the inner O-ring is shown under test. Connect a vacuum pump to the pump-out tap and evacuate the space between the two O-rings. If the vacuum in the high-vacuum space improves, the O-ring is defective.

6-122. LEAKS IN AN ADSORBENT CONTAINING ENCLOSURE.

6-123. An adsorbent gives off gas and simulates a leak making the detection of real leaks more difficult. Therefore all leak testing should be done before the adsorbent is installed, if

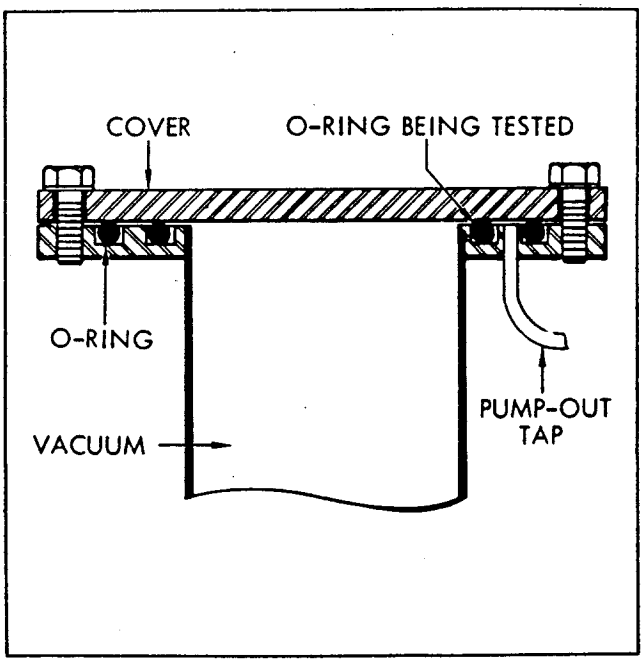

Figure 6-29. Pump-out Method of Leak -Testing O-Rings

possible. If the system has a removable cover over the adsorbent, it is possible to leak test the entire system before installing the adsorbent. After installing the adsorbent, the seal shall be leak tested by evacuating the system and using the helium mass-spectrometer in the manner described in paragraph 6-101.

CHAPTER 6

SECTION VII

INSPECTION AND MAINTENANCE

6-124. INSPECTION OF COMPONENTS PRIOR TO INSTALLATION.

6-125. Vacuum system components are suitable for many, but not all applications. Therefore, it is recommended that each component be inspected by the supplier or user and the item reworked or serviced as necessary for a specific service condition.

6-126. INSPECTION OF SYSTEM ON COMPLETION OF INSTALLATION.

6-127. VISUAL EXAMINATION.

6-128. The entire vacuum system shall be examined visually to ascertain the adequacy of support, proper touting, and identification, the quality of welds and pipe fittings, and workmanship in general, before the system is evacuated. Any evidence of damage or inadequacy of the system shall be sufficient reason to delay evacuation until the damage or inadequacy is repaired.

6-129. RADIOGRAPHIC INSPECTION.

6-130. The use of welding as a reliable means of fabricating transfer systems and assemblies has become widely accepted. However, the assurance and maintenance of high-quality standards for welding is dependent upon suitable non-destructive testing methods of detecting imperfections. All weld joints on vacuum systems shall be 100 percent radiographed and approved before being placed in service.

NOTE

Fillet welds in some configurations will not radiograph. These may be waived by the inspector only, and then only when other appropriate tests are performed.

6-131. Mark all radiographed welds (paragraph 1-727).

6-132. REPAIR OF LEAKS.

6-133. Leaks are usually found in seams, joints, and seals, and the preferred repair is to redo the connection. In the case of welded or hard-soldered joints and seams it is sometimes more convenient to seal a leak by covering it with tin-lead solder.

NOTE

Leaks should not be repaired with tin-lead solder if there is a probability that additional welding or silver soldering is to be done in the vicinity. When tin-lead solder is heated to the temperatures required for hard-soldering or welding it will oxidize and vaporize, spoiling the seal and making additional repair very difficult.

Leaks in joints that are kept at room temperature can sometimes be sealed by painting with a varnish. However, this type of seal will fail at low temperatures approaching that of liquid air.

6-143. Leaks in gasket seals usually require replacing or regreasing of the gasket. A leak in a soft metal gasket can sometimes be repaired by annealing the gasket and replacing it. Leaks in aluminum welds can be repaired by additional welding or by soldering.

NOTE

Soldering of aluminum requires special techniques because of the refractory nature of the surface oxide film. One method is to scrape or abrade the surface while it is covered with molten solder.

6-135. LUBRICATION

6-136. GENERAL.

6-137. An oil-sealed mechanical pump cannot produce a vacuum below the vapor pressure of the oil used as the sealant. The following stock listed oil (MIL-L-83767) has low vapor pressure.

9150-273-8663 (Quart)
9150-064-4138 (Gallon)

WARNING

The above oil is petroleum base and is not compatible with LOX. Explosion may result if a pump using this oil is operated in an oxygen rich atmosphere.

6-138. Mechanical vacuum pumps used for pumping down (evacuating) the annular insulating space of liquid oxygen storage tanks may use the above oil only if adequate precautions are observed. In the absence of specific directives or TO's, the following minimum requirements apply:

a. Personnel must be trained in use of vacuum pumps and LOX tank pump-down procedures.

b. Storage tank shall be completely empty of LOX.

c. Suitable check valve shall be installed in the pump-down system to prevent the ingesting of oil into the tank annular space.

d. Precautions shall be taken to ensure that adjacent and/or nearby tanks and equipment cannot contribute to an oxygen rich environment around the vacuum pumping systems.

e. The area must be thoroughly ventilated.

f. Fire extinguishers must be immediately available.

CAUTION

Do not attempt evacuation of an oxygen storage tank annular insulation space using the specified petroleum based lubricating oil if:

a. The annular insulation space pressure is above atmospheric.

b. The annular insulation space pressure relief devices show any signs of having opened or otherwise relieved pressure, or

c. Any other evidence, or even a valid suspicion, exists indicating a possible leak from the tank inner shell into the annular insulation space.

If any of these three conditions exist, and evacuation of the tank annular insulation space, before a thorough leak check can be accomplished, is necessary, be sure that:

1. The vacuum pump contains no petroleum base lubricant, and

2. Only Fluorolube GS5 or Halocarbon 4-11E is used as the vacuum pump lubricant.

3. Coordination of the LOX supply officer or responsible supervisor must be obtained.

NOTE

- Tricresyl Phosphate (TCP) has been used as a vacuum pump lubricant in some past applications involving oxygen systems. In addition to other undesirable properties, recent tests indicate that it is no less impact sensitive than most petroleum base lubricants. TCP is no longer recommended as an oxygen compatible lubricant.

- Lubricants such as Fluorolube and Halocarbon have been considered suitable for use in vacuum pumps used on LOX storage tanks; however, they are very costly and they are not safe under all combinations of conditions; i.e., in the presence of aluminum and certain gases, they are impact sensitive and therefore hazardous. Care should be exercised in their use.

6-139. Regular commercial vacuum pump oils can be used for other vacuum systems. However, careful consideration should be given to proper lubricants when a vacuum pump is used in support of any new propellant.

CAUTION

Any product proposed for use in a diffusion pump supporting an oxygen system must be approved by the safety officer and/or inspector.

6-140. All vacuum pump reservoirs shall have a metal tag attached by wiring or welding adjacent to the fill opening identifying the type of lubricant used in the pump.

6-141. PERIODIC INSPECTION OF SYSTEMS AND COMPONENTS.

6-142. Periodic inspection procedures shall be performed as specified in the system technical manual.

CHAPTER 6

SECTION VIII

OPERATION

6-143. SYSTEM CHECKOUT.

6-144. System checkout test shall be conducted as specified in the system technical manual. All new, overhauled, or modified systems shall be tested before being placed in operation.

6-145. SCHEDULE OF LEAK TESTING.

6-146. Vacuum systems or components shall require retest when the following occurs:

a. A system upon visual inspection shows signs of excessive corrosion or other deterioration.

b. A component has been dropped or damaged.

c. A system or component has been replaced, overhauled, or modified where the integrity of the system may be affected.

d. The required vacuum cannot be produced in the system.

6-147. When required, leak tests shall be performed in accordance with section VI, chapter 6.

APPENDIX I

A-1. GENERAL.

A-2. Material is often too detailed or subject to change to allow incorporation into the main sections of this handbook. This material is best treated in appendixes to the main text which can be easily modified or added to. The following pertinent data are included in this section

A-3. MECHANICAL SYMBOLS.

A-4. It is generally desirable to use a common method of identification to distinguish the various lines of piping or systems shown on a diagrammatic piping plan. The symbols illustrated in figure A-l shall be used when graphic representation of piping systems is required. (For complete listing, refer to MIL-STD-17.)

A-5. WORKING PRESS TUBING AND PIPE.

A-6. TUBING.

A-7. TO 1-1A-8 is used as the basis for determination of allowable pressures on thin-walled tubing. Values based on the following stress analysis appear in figures 1-18 through 1-22.

$$P = \frac{2\,ft}{SD}$$

where:

P = maximum allowable working pressure, psig.

f = minimum tensile strength:

Aluminum alloy (5052) . . . . . .29,000 psi.
Copper, annealed . . . . . .30,000 psi.
Copper, hard drawn . . . . . .45,000 psi.
Stainless steel, annealed . . . . . 75,000 psi.
Stainless steel, 1/4-hard . . . . . .120,000 psi.

t = wall thickness, inches.

S = safety factor.

D = tube outside diameter, inches.

A-8. The above formula, as well as others commonly used, is a variation of Barlow's formula which is best known and most widely used to calculate burst pressure of thin-walled tubing

$$P = \frac{2\,St}{D}$$

where:

P = bursting pressure, psig.

S = fiber stress in the wall of the tubing in psi or tensile strength of material

t = wall thickness, inches,

D = outside diameter, inches

A-9. The variations of this formula are all in agreement. Main variations appear in whether the OD or ID of the tube is used, the nominal or minimum wall thickness is used, a safety factor as such is listed, the safety factor appears in the fiber stress value, or a factor is included for mechanical weakening of the tube while in preparation for the fitting..

A-10. PIPE.

A-11. The Lame formula is used to calculate maximum allowable working pressure of pipe. It is as follows:

$$P = \frac{S\,(D^2 - d^2)}{D^2 + d^2}$$

where:

P = maximum allowable working pressure, psig.
S = maximum allowable stress in material due to internal pressure, psi.
D = minimum outside diameter, inches.
d = maximum inside diameter, inches.

A-12. VERIFICATION TESTS- TUBE FITTINGS.

A-13. GENERAL.

A-14. Military fittings are rated at 3,000 psig with no ratings above that, due to limited requests for higher pressure ratings, very comprehensive testing required for qualification (several orders or magnitude greater than tests run by suppliers on industrial fittings), and the time required to obtain changes in Military Specifications.

A-15. Ratings of industrial fittings are based on pressure-test data, or information from suppliers stating that "as long as a piece of tubing can be properly flared and installed in a fitting, the fitting is designed to withstand pressures above the burst pressure of the tubing." This

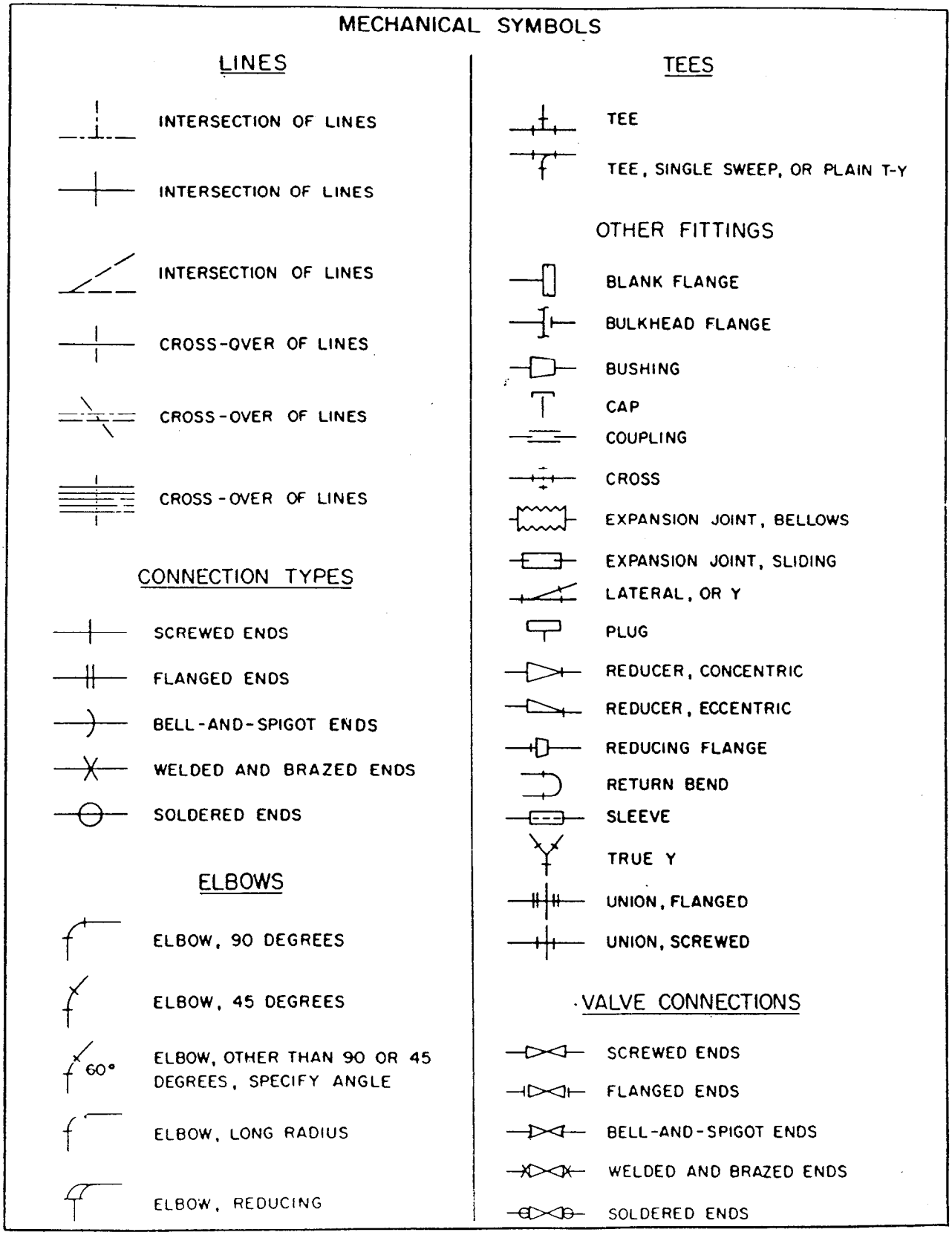

Figure A-1. Mechanical Symbols (Sheet 1 of 3)

MECHANICAL SYMBOLS

NOTE:

THE SCREWED REPRESENTATION MAY BE USED TO INDICATE ALL TYPES OF CONNECTIONS PROVIDED THE TYPE OF CONNECTION IS COVERED BY A NOTE ON THE DRAWING OR BY SPECIFICATIONS. IN THE STANDARD SYMBOLS LISTED BELOW THE SCREWED CONNECTION IS USED IN ALL ILLUSTRATIONS FOR CONVENIENCE.

CONTROL VALVES

GENERAL SYMBOL

NOTE:

THIS GENERAL SYMBOL MAY BE USED TO REPRESENT ANY CONTROL VALVE WHERE FULL DATA IS NOT KNOWN AT THE TIME THE DRAWING IS MADE

ANGLE

ANGLE, AIR OPERATED, SPRING CLOSING

ANGLE, AIR OPERATED, SPRING OPENING

ANGLE, HYDRAULICALLY OPERATED

ANGLE, MOTOR OPERATED

ANGLE, NEEDLE

BUTTERFLY

GATE

GATE, ANGLE

GATE, MOTOR OPERATED

GLOBE

GLOBE, AIR OPERATED SPRING CLOSING

GLOBE, AIR OPERATED, SPRING OPENING

GLOBE, HYDRAULICALLY OPERATED

GLOBE, MOTOR OPERATED

NEEDLE

PISTON ACTUATED VALVE (SUITABLE FOR ADDITION OF CONTROL PIPING)

STOP COCK, PLUG OR CYLINDER VALVE, 2 WAY

CHECK VALVES

CHECK, ANGLE

CHECK, BALL

CHECK, LIFT

CHECK, SWING

GENERAL SYMBOL

NOTE:

THIS GENERAL SYMBOL MAY BE USED TO REPRESENT ANY CHECK VALVE WHERE THE SPECIFIC TYPE OF VALVE AND DATA IS NOT KNOWN WHEN THE DRAWING IS MADE.

SOLENOID CONTROL VALVES

THREE WAY

FOUR WAY

RELIEF, REGULATING AND SAFETY VALVES

SHOW PRESSURE SETTINGS FOR ALL RELIEF, REGULATING AND SAFETY VALVES WHERE APPLICABLE

GENERAL SYMBOL

NOTE:

THIS GENERAL SYMBOL MAY BE USED TO REPRESENT ANY RELIEF, REGULATING OR SAFETY VALVE WHERE THE SPECIFIC TYPE OF VALVE OR VALVE DATA IS NOT KNOWN AT THE TIME THE DRAWING IS MADE

Figure A-1. Mechanical Symbols (Sheet 2 of 3)

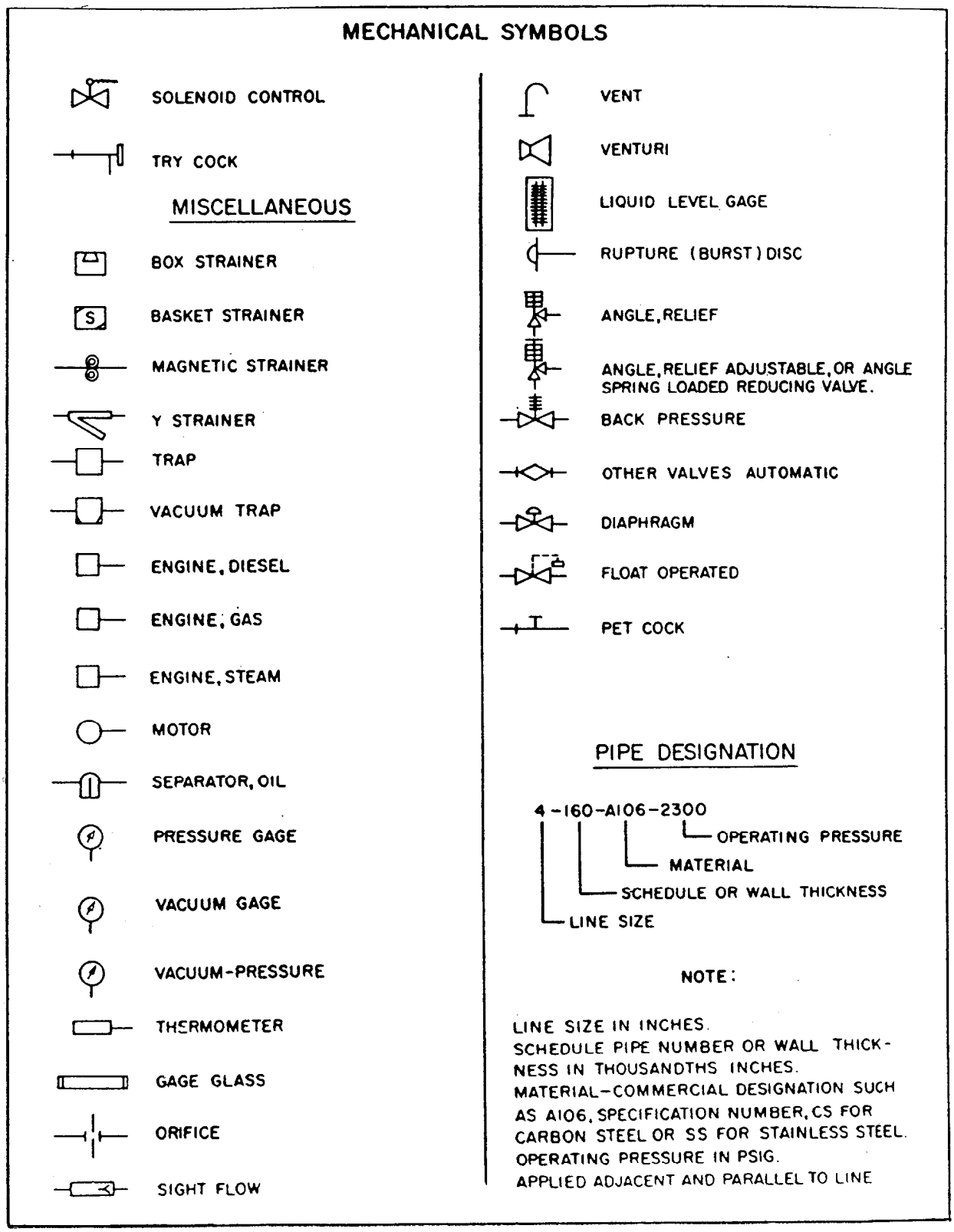

Figure A-1. Mechanical Symbols (Sheet 3 of 3)

generally leads to the rule: Where fittings and tubing of like material are used, the maximum allowable working pressure of the tubing selected is the controlling factor. An examination of the tables listing the maximum allowable working pressures for tubing reveals that tubing in the smaller sizes of workable wall thicknesses allows utilization of MS precision fittings to 6,000 psig.

A-16. Military Specification fittings are dimensionally identical to industrial flared fittings; also, the specifications on material and dimensional tolerances are more rigid then the specifications for industrial fittings. It is apparent that Military Precision flared fittings are more reliable at any pressure than equivalent industrial fittings.

A-17. A survey was made of existing test data and a series of tests conducted to verify that Military Specification fittings in the smaller sizes are suitable for pressure above the 3,000-psig rating. The results of this survey are noted in paragraphs A-10 and A-19.

A-18. CONDUCTED TESTS.

A-19. The series of conducted tests presented the following facts.

a. Stainless steel AN fittings 1/2-inch through 3/4-inch in size proved satisfactory for use in systems rated at 6,000 psig, 7/8-inch through 1-1/4 inches proved satisfactory to 3,000 psig, and fittings 1-1/2 inches through 2 inches proved satisfactory for use in systems of 2,500 psig. The torque specifications given in Specification MIL-F-5509 were used in the leak testing. None of the stainless steel fittings ruptured during the study. Maximum pressure available for the study was 30.000 psig.

b. Aluminum fittings 1/4-inch through 3/4-inch proved satisfactory for systems of 4,000 psig. Fittings of 1 inch in size proved satisfactory at 3,000 psig, fittings 1-1/4 inches through 1-3/4 inches proved satisfactory through 2,000 psig, and fittings 2 inches proved satisfactory at 1,500 psig.

c. The male-type fitting proved least subject to failure. The aluminum fittings have the lowest strength factor.

d. This study was not all-conclusive and does not constitute authority to recommended the use of aluminium or stainless steel fittings for any other rating than that proposed by ASME and AF codes.

A-20. TUBE SUPPORT SPACING.

A-21. The tube support spacing values listed in the manuals are based on aircraft usage where loads in excess of these anticipated in ground support equipment are involved. These values are quite restrictive and are seldom adhered to.

A-22. In order to arrive at more realistic values, calculations were made by the continuous beam or free span method which are generally used for determining the spacing of pipe supports.

$$\text{Continuous beam } N = \frac{Z\,S}{4\,W_t}$$

$$\text{Free span } N = \frac{Z\,S}{6\,W_t}$$

where:

N = allowable spacing of supports, feet.

Z = section modules of pipe, inches.

W_t= weight of line full of liquid plus insulation and other permanent loads, pounds per foot.

S = allowable stress or S-value for weight loadings, psi. (Usually 1/4 the S-values in tables.)

A-23. Figure A-2 is a chart indicating the maximum span versus pipe sizes based on the mean value of the above formula for various materials.

A-24. Figure A-3 is a chart indicating the maximum span versus tube size based on the mean value of the continuous beam and free span formulas. The lightest wall in each size, 1/8-0.020, 3/16-0.016, 1/4-0.020, 3/8-0.035, 1/2-0.028, 5/8-0.028, 3/4-0.042 7/8-0.049, 1-0.049, 1-1/4-0.049, 1-1/2-0.058, 1-3/4-0.065, and 2-0.072, was used in

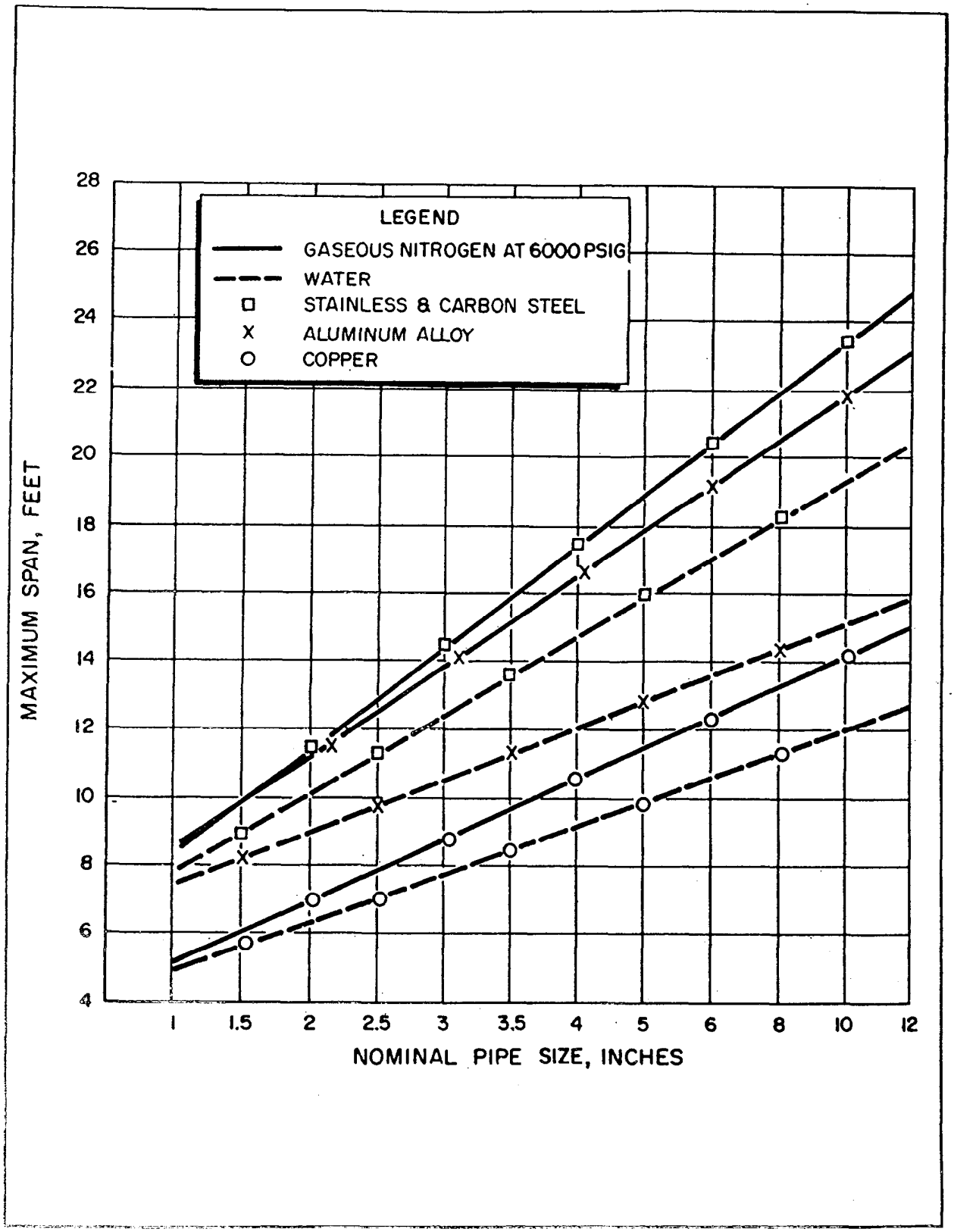

Figure A-2. Maximum Span for Standard Wall Pipe

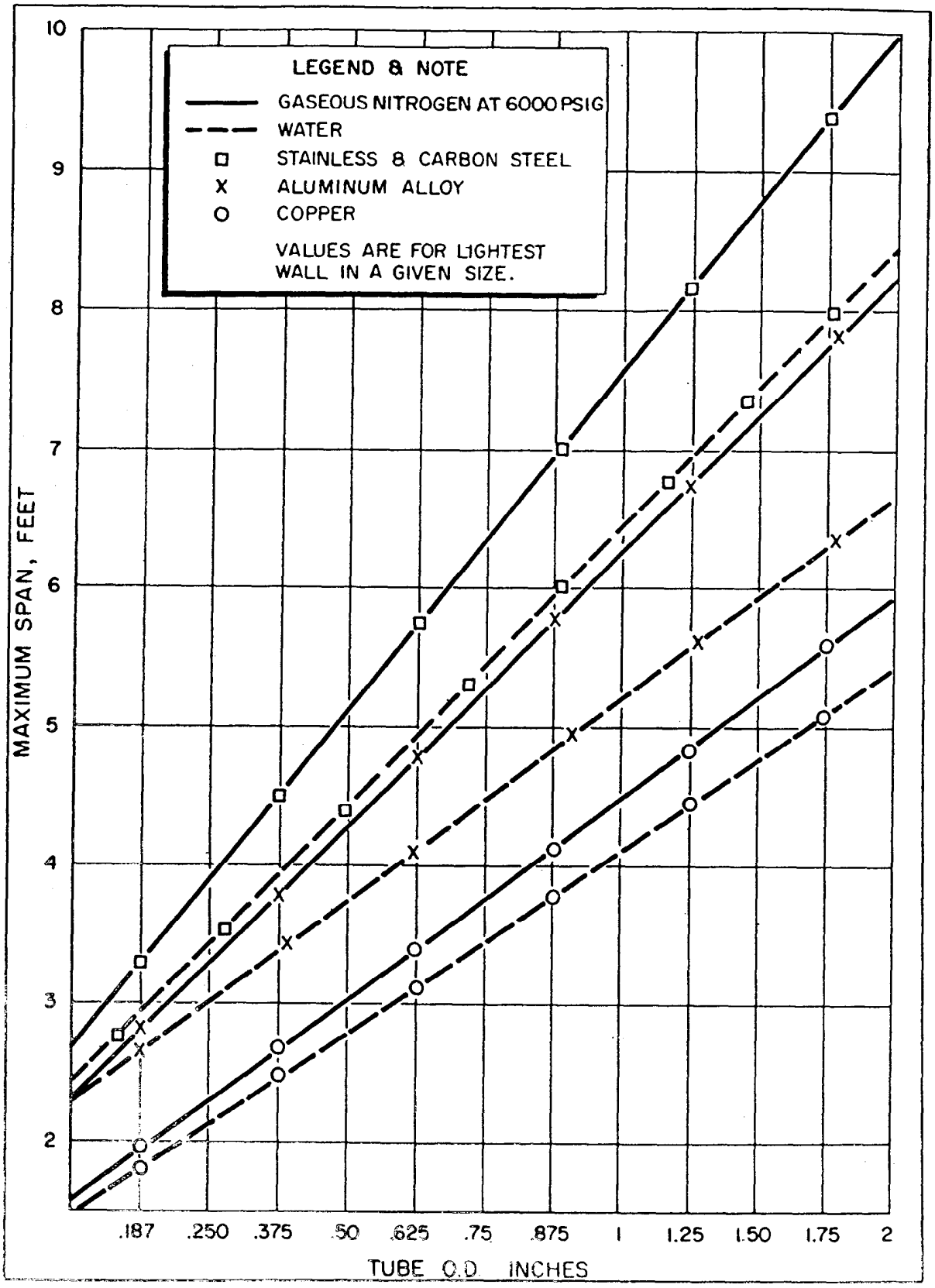

Figure A-3. Maximum Span for Standard Tubing

the calculations. Where heavier walls are used in a system a considerable safety factor is added if values from the chart are used in the design.

A-25. Verification tests were conducted with tubing of various sizes and material and the results are noted in paragraph A-26 and A-27.

A-26. VERIFICATION TESTS - TUBE SUPPORTS.

A-27. The results of the study made on tubing support spacing produced the following information:

a. The weight of the fluid being transported in the tubing directly affects the support spacing. The heavier weighted fluid demands closer spacing of supports. This fact must be considered in tubing installations for economy.

b. Variable pressures seemed to have no effect on the support spacing.

c. In pressure-burst test there was no complete severing of the tube experienced; the break appeared along the longitudinal surface of the tube. There was only a slight deflection of the tube in the direction opposite the break.

d. In the size of tubing tested, 1/4-inch through 2 inches; the minimum support spacing necessary was found to be 4 feet. The maximum support spacing indicated was 9 feet.

e. Connections should be supported a maximum of 12 inches on each side of the fitting. Since the fitting is the weakest link in the system, it must be protected from too much vibration and subsequent break. It must also be accessible when changes become necessary.

f. Interlocking tube clamps are recommended.

A-28. SPECIAL EQUIPMENT REQUIRED.

A-29. Equipment items of an approved equal may be utilized where applicable.

A-30. TUBE FABRICATION EQUIPMENT.

a. Manual Tube Flarer, Leonard Model 3CP.

b. Tube Flaring Machine, Leonard Tube Master Model 3CP-VD

c. Tube Bender, Parker Model 848

d. Ballistic Flare Tool (Parker Hannefin Corp, Models B820A and B2032) should be used on corrosion-resistant steel tube.

A-31. SUPERPRESSURE TUBE FABRICATION EQUIPMENT.

a. Preparation of end of 1/4-inch OD tubing:

1. Forming Tool, Aminco Catalog No. 48-5012.

2. Threading Tool, Aminco Catalog No. 48-5025.

b. Preparation of end of 3/8-inch OD tubing:

1. Forming tool, Aminco Catalog No. 48-5032.

2. Threading Tool, Aminco Catalog No. 48-5045.

c. Preparation of end of 9/16-inch OD tubing

1. Forming Tool, Aminco Catalog No 48-5062.

2. Threading Tool, Aminco Catalog No 48-5075

A-32. HOSE ASSEMBLY EQUIPMENT.

a. Manual Assembly Tools, medium pressure hose, Aeroquip Model 1598

b. Hose Assembly Machine, all pressure ranges, Aeroquip Model F-2152

A-33. HYDROSTATIC TEST EQUIPMENT.

a. Hydrostatic Pump, 0 to 6000 psig. FSN 4320-730-9258.

b. Valves and Fittings, Aminco Superpressure or equal, 0 to 30,000 psig.

c. Vacuum Pump, FSN 4310-516-3901.

d. Hydrostatic Pump, remote control, 0 to 30,000 psig, FSN 4320-086-7655

e. CEC Moisture Monitor, Model 26-350 (as specified in TO 42B7-3-1-1).

A-34. SCRATCH INVESTIGATION EQUIPMENT.

a. Hilder and Watts Scratch Investigation Microscope.

b. Sharp Pointed Dial Indicator.

c. Sharp Pointed Depth Micrometer.

d. Microscope Adapter (AF drawing 63D25536) for positioning microscope to measure scratch depth in tube or pipe.

A-35. CONVERSION TABLES.

A-36. The following figures (A-4 through A-7) present commonly used conversion information figure A-4 is for volume, figure A-5 is for pressure, figure A-6 is for vacuum, and figure A-7 is for size.

CUBIC INCHES	CUBIC FEET	CUBIC YARDS	U.S. QUARTS LIQUID	U.S GALLONS LIQUID	LITERS
1	$0.0_{3}5787$	$0.0_{4}2143$	0.01732	0.004329	0.01639
1728	1	0.03704	29.92	7.481	28.32
46656	27	1	807.9	202.0	764.6
57.75	0.03342	0.001238	1	0.25	0.9464
67.20	0.03889	0.001440	1.164	0.2909	1.101
231	0.1337	0.004951	4	1	3.785
268.8	0.1556	0.005761	4.665	1.164	4.405
2150	1.244	0.04609	37.24	9.309	35.24
6102	0.03531	0.001308	1.057	0.2642	1

NOTE

$0.0_{4}2296$ means that there are four ciphers between decimal point and first digit, thus 0.00002296.

Figure A-4. Volume Conversion Table

POUNDS PER SQUARE INCH ABS	POUNDS PER SQUARE FOOT ABS	ATMOS-PHERES	COLUMN MERCURY AT 32°F (0°C), INCHES	COLUMNS WATER AT 59°F (15°C), INCHES	KILOGRAMS PER SQUARE CENTIMETER
1	144	0.06804	2.036	27.70	0.07031
0.00694	1	$0.0_{3}4725$	0.01414	0.1924	$0.0_{3}4882$
13.89	2000	0.9450	28.28	384.8	0.9765
14.70	2116.3	1	29.92	407.2	1.0333
0.4912	70.73	0.03342	1	13.61	0.03453
0.4332	62.43	0.02947	0.8819	12	0.03045
0.03610	5.2023	0.002456	0.07349	1	0.002538
14.22	2048	0.9678	28.96	394.0	1

NOTE

$0.0_{4}2296$ means that there are four ciphers between decimal point and first digit, thus 0.00002296.

Figure A-5. Pressure Conversion Table

VACUUM IN. HG		29.9996		29.96	29.5	26	10	0
ABS PRESS. IN. HG		0.0004		0.04	0.5	4	20	30
ABS PRESS. MM HG (TORR)	.001 (10^{-3})	.010 (10^{-2})	.100 (10^{-1})	1.0	10.	100.		760
ABS PRESS. MICRONS	1.0	10.	100.	1000.				

Figure A-6. Vacuum Conversion Table

RELATIVE SIZE OF PARTICLES

NOTE
MAGNIFICATION 500 TIMES

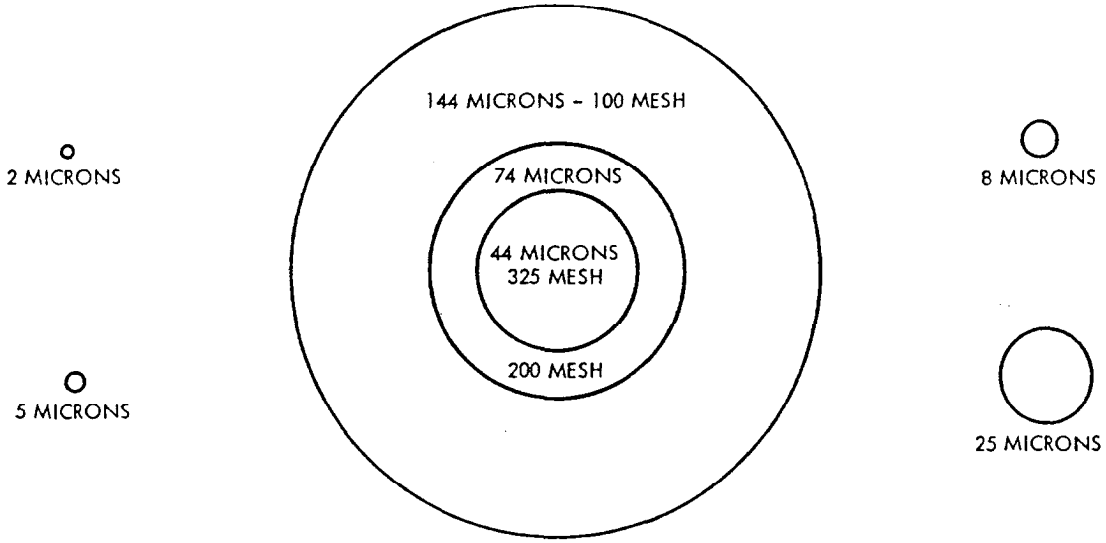

LINEAR EQUIVALENTS

1 INCH	25.4 MILLIMETERS	25,400 MICRONS
1 MILLIMETER	0.0394 INCHES	1,000 MICRONS
1 MICRON	$\frac{1}{25,400}$ OF AN INCH	0.001 MILLIMETERS
1 MICRON	3.94×10^{-5}	0.000039 INCHES

RELATIVE SIZES

LOWER LIMIT OF VISIBILITY (NAKED EYE)	40 MICRONS
WHITE BLOOD CELLS	25 MICRONS
RED BLOOD CELLS	8 MICRONS
BACTERIA (COCCI)	2 MICRONS

SCREEN SIZES

MESHES PER LINEAR INCH	U.S. SIEVE NO.	OPENING IN INCHES	OPENING IN MICRONS
52.36	50	0.0117	297
72.45	70	0.0083	210
101.01	100	0.0059	149
142.86	140	0.0041	105
200.00	200	0.0029	74
270.26	270	0.0021	53
323.00	325	0.0017	44
		0.00039	10
		0.000019	0.5

Figure A-7. Size Conversion Chart

APPENDIX II

GLOSSARY

A

ABSOLUTE PRESSURE: The difference between perfect vacuum, or zero pressure absolute, and some known pressure. May be determined by adding gage pressure to atmospheric (barometric) pressure. Designated psia.

ABSOLUTE ZERO: Theoretical temperature at which all thermal motion or heat action ceases, approximately -273.16°C, -459.69°F, 0°K, and 0°R.

ADSORPTION: The adhesion of a thin film of liquid or gas to the surface of a solid substance. The solid does not combine chemically with the absorbed substance.

ALLOY: A metallic compound produced by adding other metallic or non-metallic substances to a basic metal for the purpose of obtaining specific characteristics.

AMBIENT PRESSURE: Pressure of surrounding area, usually atmospheric pressure.

AMBIENT TEMPERATURE: Temperature of surrounding area, usually room temperature.

ANNEAL: To subject to high heat, with subsequent cooling, so as to soften thoroughly and render less brittle.

AROMATIC COMPOUNDS: Chemical compounds containing benzene derivatives.

AUSTENITIC: The solid solution of iron and carbon, in high carbon steel, as it exists above the transformation point (about 1,350°F (738°C)). May be partially preserved by sudden cooling, as by quenching.

B

BAKE-OUT: The process of applying heat to a vacuum chamber to facilitate removal of residual gases.

BAROMETRIC PRESSURE: The atmospheric pressure as determined by a barometer, preferably the mercury column type. Standard barometer reading at sea level is 29.92 inches of mercury at 32°F (0°C) or 30 inches at 58°F (14.5°C).

B (Continued)

BARRICADE: A natural or artificial obstruction of such a type, size, and construction as to limit, in a prescribed manner, the effect of an explosion on nearby buildings or exposures.

BOURDON TUBE: A flattened tube bent to a curve, which tends to straighten under internal pressure. Used to move the indicator on Bourdon-type pressure gages.

BUNA N (NITRILE RUBBER) (GR-A): A type of synthetic rubber made from the copolymers of butadiene and acrylonifrile. Typical commercial polymers are Hycar and Paracril.

BUNA S (GR-S): A type of synthetic rubber made from the copolymer of butadiene and styrene. Used to make gaskets, O-rings, and flex hose.

BUTYL RUBBER: Synthetic rubber produced by copolymerization of isobutene with a small proportion of isoprene of butadiene. Its outstanding property compared with other rubbers is impermeability to gases. Uses as a diaphragm fabric elastomer, O-rings, gaskets, and as binder fuel in solid rocket propellants.

C

CAVITATION: The rapid formation and collapse of vapor pockets in a flowing liquid under very low pressures.

CHAMBER: A bevelled edge or corner.

CRITICAL PRESSURE: The pressure at which gas and liquid phases of a substance have the same density.

CRITICAL RANGE: The range of temperature in which the reversible change from austenite (stable at high temperature) to ferrite, pearlite, and cementite (stable at low temperature) oc-

C (Continued)

curs. The upper limit varies with carbon content; the lower limit for slow heating and cooling is about 1,290°F (700°C).

CRITICAL TEMPERATURE: The temperature at which gas and liquid phases of a substance have the same density.

CRYOGENIC: Is derived from two Greek words meaning "frost-producing." Cryogenic liquids used in rocket engines are those fuels and oxiders which boil below -238°F (150°C). Examples are: liquid methane, liquid hydrogen, liquid oxygen, liquid oxygen difuoride, and liquid flourine.

CURE DATE: The date of vulcanization of a rubber part. Frequently required to be stamped on parts or packages of material conforming to military specifications.

D

DAMPING: The extent of reduction of amplitude of oscillation in a mechanical system due to energy dissipation caused by friction, viscosity, etc.

DESIGN PRESSURE: The maximum pressure and/or vacuum at which a system may be operated, at a design temperature

NOTE

The design pressure of a system may vary if operating temperature is appreciably different from design temperature.

DEWAR FLASK: A multiple-walled vessel with the space between the walls evacuated and/or insulated to prevent the conduction and convection of heat.

DEW POINT: The combination of temperature and pressure at which a condensable vapor produces the first small amount of liquid in equilibrium with the vapor.

DIFFERENTIAL PRESSURE: The difference between a reference pressure and a variable pressure.

D (Continued)

DYNAMIC IMPULSE: The reaction of the kinetic energy contained in a mass of high pressure fluid (gas or liquid) traveling at a high velocity as it compresses a lower pressure fluid in a closed container or by the sudden interruption of the fluid flow.

E

ECCENTRIC: Not having the same center; varying from a circle, as in "eccentric orbit.:

ELASTICITY: The tendency of a body to return to its original size or shape, after having been stretched, compressed, or deformed.

ELASTIC LIMIT: The limiting value of the deforming force beyond which a body does not return to its original shape or dimensions when the force is removed.

F

FLASH-POINT: The temperature at which the vapor of a fuel or oil will flash or ignite momentarily.

G

GAGE PRESSURE: Pressure indicated by a gage. Is dependent upon atmospheric pressure from which it is referenced. Designated psig.

GALLING: The condition in which metal parts, when rubbed together under pressure, will exchange particles from their surfaces to create a roughness.

GETTERING: The process of using a substance in a high-vacuum system for the removal of the last traces of gas.

GLAND: (1) A stuffing box nut or sleeve which compresses the packing. (2) A shaft leakage prevention device in a pressure vessel.

H

HEAT OF VAPORIZATION: The heat absorbed by a liquid when it vaporizes. The quantity of heat required at a given temperature to convert a unit mass of liquid into vapor.

H (Continued)

HYDRAULIC: Of or pertaining to liquid fluids in motion.

HYDROSTATIC EFFECT: The pressure exerted by a column of liquid under normal gravitational conditions on the surface of the earth, or in a gravitational field during an acceleration.

HYDROSTATIC TEST: A method of pressure-testing a vessel, using liquid as the testing medium.

HYPERGOLIC: A substance is said to be hypergolic when it is capable of igniting spontaneously upon contact with another substance.

HYSTERESIS: The extent to which any strain depends not only on existing stress but also on previous stress history.

I

INCH OF WATER: A unit of pressure equal to the pressure exerted by a column of liquid water 1 inch high at standard temperature; 27.7 inches of water = 1 psi.

INTERFACE: The surface of separation between a liquid and a vapor.

IONIZATION: Formation of electrically charged particles; can be produced by high-energy radiation, such as light or ultra-violet rays, or by collision of particles in thermal agitation.

L

LONGITUDINAL: Of or pertaining to length; placed on running lengthwise, as distinguished from transverse; lengthwise dimension.

M

MANOMETER: An instrument for measuring pressure; essentially a U-tube partially filled with liquid, usually water, mercury, or a light oil, so constructed that the amount of displacement of the liquid indicates the pressure being exerted on the instrument.

MAXIMUM OPERATING PRESSURE: The maximum pressure and/or vacuum at which a system may be operated at operating temperature, normally 10 to 20 percent lower than the design pressure.

M (Continued)

MICRON: A unit of measure of pressure equal to one-thousandth (10^{-3}) of a millimeter of mercury absolute.

MODULES OF ELASTICITY: The quotient obtained by dividing the stress per square inch by the elongation per inch caused by this stress.

N

NEOPRENE: A type of synthetic rubber used for gaskets, O-rings, and hoses. It is a polymer of chloroprene, and is resistant to hydrocarbons.

NET POSITIVE SUCTION HEAD (NPSH): The head, in feet of liquid, less the vapor pressure of the liquid, in feet, at the pumping temperature, required to push a given quantity of liquid into the impeller of a pump.

NORMALIZING: A heat-treatment applied to steel. It involves heating above the critical range, followed by cooling air, and is performed to refine the crystal structure and eliminate internal stress.

O

OUTGAS: The gas that evolves from a solid in a vacuum.

P

PLENUM: A pressure-equalizing chamber.

PNEUDRAULIC: Pertaining to a combination of pneumatic and hydraulic systems.

PNEUMATIC: Pertaining to the use of gases under pressure.

PRESSURE: The force exerted per unit of area

PROPELLANT: Any agent used for consumption or combustion in a rocket and from which the rocket derives its thrust, such as fuel, oxidizer, additive, catalyst, or any compound or mixture of these. It may be either in liquid or solid form.

R

RATTLE SPACE: The displacement envelope required by a shock mounted system or component when subjected to a shock environment.

RESIDUAL STRESSES: The stresses remaining in a solid body or vessel wall after it has been heat-treated, subjected to internal pressure, or given similar treatment and then returned to atmospheric pressure and temperature.

RESONANCE (MECHANICAL): The phenomenon shown by a vibrating system when some harmonics of the impulsing force are synchronized with the natural vibrating frequency of the system, causing a reinforcement of the natural vibration amplitude of the system that may cause the system to fail.

S

SILVER SOLDER: Alloys containing 5 percent to 80 percent silver, with melting points from approximately 482°F (250°C) to 1470°F (800°C), used as solder; harder and stronger than tin-lead solder.

STATIC PRESSURE: The pressure exerted on the walls of a container by a fluid at rest.

STRAIN: The change in dimensions of a body under load. Linear strain is change in length per unit of length.

SWAGE: To bend or shape cold metal to a required form by means of a tool, die, or stamp.

T

TEFLON: Trademark for tetrafluoroethylene (TFE). Has a waxy texture; is opaque with a milk-white color. Is nonflammable, highly resistant to oxidation and action of chemicals, including strong acids, alkalies, and oxidizing agents. It retains useful properties from -450° to +550°F (-270° to 290°C) and is strong and tough. Has an almost uniquely low coefficient of friction, and anti-stick properties. Uses include gaskets, hose linings, tubing, seals, electrical component insulation, valve seats, bearings, and packings.

TEMPERING: The reheating of hardened steel at any temperature below the critical range, in order to decrease the hardness.

T (Continued)

THERMAL EXPANSION: The increase in dimensions of a body or in the volume of a gas accompanying an increase in temperature.

THERMAL FATIGUE: The decrease in strength of a body due to repeated temperature cycles.

THIXOTROPIC: The property of certain gels of liquifying when shaken, and or reforming when standing.

TORR: A unit of measure of vacuum, equivalent to the pressure necessary to support a column of mercury 1 millimeter high, formerly referred to as millimeters of mercury absolute. Normal atmospheric pressure = 760 torr.

TRANSVERSE: Broader than long: lying across the long axis of the body; lying crosswise between connecting two structures; connecting two structures in crosswise fashion.

TRUNCATION: A cut off or blunt end.

U

ULLAGE: The amount that a container, such as a fuel tank, lacks of being full.

UNDER-RATED HOSE: A Hose used at an operating pressure in excess of the maximum design working pressure for the hose.

UNDULATION: A continuously propagated motion to and fro; a vibration or pulsation caused by an earth trembler.

V

VALVE BODY: The main part of a valve. The part to which lines are attached by means of flanges or threaded bosses.

VALVE PLUG: The movable portion which contacts the seat to form a seal. Different shapes are used to produce different opening characteristics.

VALVE SEAT: The orifice through which the fluid flows. It is either all metal or metal with a plastic insert which contacts the plug (soft seat).

VALVE STEM: The connector between the actuator and plug.

V (Continued)

VALVE TRIM: The plug and seat combination. Metal to metal, O-ring to metal, and soft seat are common applications.

VELOCITY PRESSURE: The kinetic pressure in the direction of flow necessary to cause a fluid at rest to flow at a given velocity.

Y

YIELD POINT: The stresses at which a substantial amount of plastic deformation (stretch) takes place in a metal under constant or reduced load.

APPENDIX III

BIBLIOGRAPHY

C-1. The preparation of a handbook of this type necessitates the utilization of a tremendous amount of reference material. While it is not possible to acknowledge all sources of material, this list is representataive of the material required to select equipment and to fabricate, test, operate, and maintain a high-pressure fluid system.

AFBM Exhibit 58-20A, "Gas, Fluid, and Electrical Conduit Line Identification for Use in Missile and Space Systems," AFMBD (ARDC), Los Angeles 45, Calif., Oct. 1960. (Chapter 1, Section V.)

AFMDC Regulation No. 32-6, "Ground Safety Standards for High Pressure Gas Systems," Holloman Air Force Base, New Mexico, July 1960. (General Reference.)

AFM 32-3, "Accident Prevention Handbook," Air Force Manual, Aug. 1958. (General Reference.)

Asp, H., "How Teflon Packings Behave," Applied Hydraulics & Pneumatics, May 1957. (Chapter 1, Section II.)

"A Study of Condensing Vacuum Insulation," National Bureau of Standards, Boulder, Colorado. (Chapter 1, Section III.)

"A Transfer Line for Liquefied Gases," National Bureau of Standards, Boulder, Colorado. (Chapter 1, Section III.)

Bokemeier, S. H., "Designing a Clean Room Facility," Missile and Space, June 1961. (Chapter 1, Section VIII.)

Bulletin TT640, "Allowable Working Pressures," Tube Turns, Louisville, Kentucky, 1955. (Chapter 1, Section III.)

Bulletin No. 5, "Aloyco Teflon Seated Valves," Alloy Steel Products Co., Inc., Linden, New Jersey. (Chapter 1, Section II.)

Bulletin G-50, "Cryogenic Storage Vessels," Chicago Bridge and Iron Works, Chicago, Ilinois. (Chapter 1, Section III.)

Bulletin NAVDOCKS P-51, "Design of Protective Structures," Bureau of Yards and Docks, Department of the Navy, Washington, D.C. (Chapter 1, Section VIII.)

Bulletin 215, "Denison Equipment in Applied Hydraulics," Denison Engineering Division, Columbus, Ohio. (Chapter 1, Section II.)

Bulletin TT330, "Design Properties of Pipe, "Tube Turns, Louisville, Kentucky, 1955. (Chapter 1, Section III.)

Bulletin, "Flexitallic - Spiral - Wound Gaskets," Flexitallic Gasket Company, Camden, New Jersey. (Chapter 1, Section III.)

Bulletin No. 555-A, "High Pressure Equipment," Autoclare Engineers Sales Corporation, Erie, Pa., 1960. (Chapter 1, Section III.)

Bulletin 10-1, "High Vacuum Valves, Baffles, and Traps," Consolidated Vacuum, Rochester, New York. (Chapter 6.)

Bulletin, "Hydraulic and Pneumatic Check Valves," Kepner Products Company, Summit, Illinois. (Chapter 1, Section II.)

Bullentin No. 255, "Hydraulic and Pneumatic Equipment," Sprague Engineering Corporation, Gardena, Calif. (Chapter 1, Section VI.)

Bulletin No. T-110, "John Crane Teflon Products," Crane Packing Company, Morton Grove, Illinois. (Chapter 1, Section II.)

Bulletin PK-12A, "Johns-Manville Packings," Jons-Manville, New York, New York. (Chapter 1, Section II.)

Bulletin TT809, "Line Expansion and Flexibility," Tube Turns, Louisville, Kentucky, 1956. (Chapter 1, Section V.)

Bulletin, "Piping Engineering," Tube Turns, Louisville, Kentucky, 1951. (Chapter 1, Section III.)

Bulletin TT698, “Pressure Stress Ratios,” Tube Turns, Louisville, Kentucky, 1955. (Chapter 1, Section Ill.)

Bulletin TT700, “Pressure-Temeprature Ratings of American Standard Steel Pipe Flanges,” Tube Turns, Louisville, Kentucky, 1955. (Chapter 1, Section Ill.)

Bulletin No. 29, “Shock, Vibration and Associated Environments,” Research and Engineering, Office of the Secretary of Defense, Part III, July 1961. (Chapter 2, Section 1.)

Bulletin No. 576, “Stainless Steel Welding Fittings, Weldells and Forged Flanges,” Taylor Forge & Pipe Works, Chicago, Illinois, 1958. (Chapter 1, Section Ill.)

Bulletin TT726, “Supports and Anchors for Piping,” Tube Turns, Louisville, Kentucky, 1952. (Chapter 1, Section IV.)

Catalog No. 105, “Aircraft Catalog,” Aeroquip Corporation, Jackson, Michigan, 1959. (Chapter 1, Section Ill.)

Catalog, “Aircraft Plumbing Handbook,” Resistoflex Corporation, Roseland, New Jersey, 1951. (Chapter 1, Section Ill.)

Catalog No. 1500-C, “Annin Valves,” The Annin Co., Los Angeles, Calif. (Chapter 1, Section II.)

Catalog No. 3008, “Ashcroft Gages,” Manning, Maxwell and Moore, Stratford, Conn., 1957. (Chapter 1, Section Ill.)

Catalog “Automatic Controls, Safety Heads and Tank Venting Equipment,” Black, Sivalls and Bryson, Inc., Kansas City, Mo. (Chapter 1, Section II.)

Catalog 125, “Cardair Central Compression Systems,” Cardair, Chicago, Illinois, 1959. (Chapter 1, Section Ill.)

Catalog, “Circle Seal Check Valves,” CircleSeal Supply Co., Pasadena, Calif. (Chapter 1, Section II.)

Catalog 100, “Cobra Seamless Metal Hose,” Cobra Metal Hose, Chicago, Illinois. (Chapter 1, Section III.)

Catalog, “Control Valves,” South Western Valve Corp., Santa Ana, Calif. (Chapter 1, Section II.)

Catalog No. 55 “Convoluted Couplings,” Solaflex Bellows Division, San Diego, Calif., 1954. (Chapter 1, Section IV.)

Catalog No. 53, “Crane Valves, Fittings, Pipe, and Fabricated Piping,” Crane Co., Chicago, Illinois, 1952. (Chapter 1, Section III.)

Catalog PV, “Cryogenic Valves, Gas Valves, and Regulators,” Pacific Valves, Inc., Long Beach, Calif. (Chapter 1, Section II.)

Catalog 1159, “Dehydration for Gases - Valves for Gases and Liquids,” Robbins Aviation, Inc., Los Angeles, Calif. (Chapter 1, Section II.)

Catalog, “Filters for Aircraft, Missiles, Industrial and Ground Support Equipment,” Bendix Filter Division, Madison Heights, Michigan. (Chapter 1, Section II.)

Catalog 17C, “Flexon Flexible Metal Hose,” Flexonics Corporation, Maywood, Illinois. (Chapter 1, Section ill.)

Catalog No. 55, “Forged and Seamless Welding Pipe Fittings,” Ladish Co., Cudahy, Wisconsin. (Chapter 1, Section Ill.)

Catalog No. 11A1, “Fluid Control Products,” Hoke Incorporated, Cresskill, New Jersey. (Chapter 1, Section II.)

Catalog, “Futurecraft Valves,” Futurecraft Corporation, El Monte, Calif. (Chapter 1, Section II.)

Catalog 201, “Grove Pressure Controls,” Grove Valve and Regulator Company, Oakland, Calif. (Chapter 1, Section II.)

Catalog, 613, “High Pressure Corrosive Resistant Steel Valves and Fittings,” Dragon Engineering Company, Norwalk, Calif. (Chapter 1, Section II.)

Catalog, “High Pressure Equipment,” Pressure Products Industries, Hatboro, Pa., 1956. (Chapter 1, Section III.)

Catalog, “High Vacuum Equipment,” Vacuum-Electronics Corp., Plainview, Long Island, New York. (Chapter 6.)

Catalog No. 658, “H I P Midget Valves and Fittings,” High Pressure Equipment Co., Inc., Erie, Pa., 1958. (Chapter 1, Section Ill.)

Catalog No. 104, “Hose of Teflon,” Aeroquip Corporation, Jackson, Michigan, 1959. (Chapter 1, Section Ill.)

Catalog No. 4400, “Hose-Lok Fittings and Hose Assemblies,” The Parker Appliance Co., Cleveland, Ohio, 1953. (Chapter 1, Section Ill.)

Catalog No. 20, “Hydromatics Flo-Ball Valves,” Hydromatics Inc., Livingston, New Jersey. (Chapter 1, Section II.)

Catalog No. 250, “Industrial Catalog,” Aeroquip Corporation, Jackson, Michigan, 1960. (Chapter 1, Section III.)

Catalog “Leonard Tube Master,” Leonard Precision Products Co., Garden Grove, Calif. (Chapter 1, Section IV.)

Catalog, “Metal Hose for the Industrial World,” U.S. Flexible Metallic Tubing Co., San Fransisco, Calif. (Chapter 1, Section Ill.)

Catalog, “Pacific Pumps,” Pacific Pump Company, Oakland, Calif. (Chapter 1, Section II.)

Catalog No. 5700, “Parker O-Ring Handbook,” Parker Seal Company, Culver City, Calif., 1960. (Chapter 1, Section Ill.)

Catalog No. 255, “Powell Corrosion Resistant Valves,” The Wm. Powell Company, Cincinnati, Ohio. (Chapter 1, Section II.)

Catalog No. 157, “Precision Valves for Industry,” Anderson, Greenwood & Co., Houston, Texas. (Chapter 1, Section II.)

Catalog No. 571, “Prouducts for Piping and Pressure Vessel Construction,” Taylor Forge and Pipe Works, Chicago, Illinois, 1957. (Chapter 1, Section III.)

Catalog No. 1058, “Purolator Industrial Filters,” Purolator Products, Inc., Rahway, New Jersey. (Chapter 1, Section II.)

Catalog, “Quick Disconnect Couplers,” The **Bruning** Company, Lincoln, Nebraska. (Chapter 1, Section II.)

Catalog, “Regulator,” Victor Equipment Company, Los Angeles, Calif. (Chapter 1, Section II.)

Catalog No. 62, “Republic Supply Co.,” Los Angeles, Calif. (Chapter 1, Section Ill.)

Catalog No. 11, “Rockwell-Nordstorm Valves,” Rockwell Manufacturing Company, Pittsburg, Pa. (Chapter 1, Section II.)

Catalog, “Sales Data-Relief Valves & Check Valves,” Fluid Mechanics Company, Houston, Texas. (Chapter 1, Section Il.)

Catalog V-54, *Saunders Patent Diaphragm Valves,” Hills-McCanna, Chicago, Illinois, 1953. (Chapter 1, Section II.)

Catalog, Section 20, “Superior Stainless Tubing,” Superior Tube Company, Norristown, Pa. (Chapter 1, Section Ill.)

Catalog No. 460, “Super-Pressure Equipment,” American Instrument Co., Inc., Silver Springs, Md., 1959. (Chapter 1, Section Ill.)

Catalog No. 4300, “Tube Fittings and Tube Fabrication Equipment,” The Parker Appliance Company, Cleveland, Ohio, 1954. (Chapter 1, Section Ill.)

Catalog No. 4100, “Tube Fittings,” Parker Aircraft Co., Los Angeles, Calif., 1957. (Chapter 1, Section Ill.)

Catalog, “Vacuum Equipment Systems and Components,” NRC Equipment Corporation, Newton, Massachusetts. (Chapter 6.)

Catalog No. 352, “Valves,” Republic Manufacturing Co., Cleveland, Ohio. (Chapter 1, Section II.)

Catalog No. 60, “Valves, Bronze, Iron, Steel and PVC,” The Lunkenheimer Company, Cincinnati, Ohio. (Chapter 1, Section Il.)

Catalog, “Viking Rotary Pumps,” Viking Pump Company, Los Angeles, Calif. (Chapter 1, Section Il.)

Catalog No. 311, “Welding Fittings-Flanges” Tube Turns, Louisville, Kentucky, 1954. (Chapter 1, Section Ill.)

Catalog No. 56, “Zallea Expansion Joints,” Zallea Brothers, Wilmington, Delaware, 1956. (Chapter 1, Section IV.)

“Copper Tube Handbook,” Scovill Manufacturing Co., Waterbury, Conn. (Chapter 1, Section III.)

Coward, H. D., Jones, G. W., “Limits of Flammability of Gases and Vapors,” Bulletin 503, Bureau of Mines, Washington, D.C., 1952. (Chapter 1, Section VIII.)

Cox, R.G., “Understanding Pipe and Tubing,” Hydraulics and Pneumatics, Aug. 1951. (Chapter 1, Section Ill.)

Cracker, S., Walker, J.H., “Piping Handbook,” Second Ed., McGraw-Hill Book Co., Inc., New York, 1931. (General Reference.)

Crowe, JJ., “Safety and Compressed Gases,” Industrial and Engineering Chemistry, Vol, 48, Part I, Jan. - June 1956, Pages 230-232. (Chapter 1, Section VI.)

“Cryogenic Materials Data Handbook,” OTS, U.S. Dept. of Commerce, Washington, D.C. (Chapter 1, Section Ill.)

Datz, S., “Packing Materials for Hydraulics and Pneumatics,” Applied Hydraulics and Pneumatics, July 1959. (Chapter 1, Section Il.)

Daugherty, R.L., Ingersoll, A.C., “Fluid Mechanics with Engineering Applications,” 5th Ed., McGraw-Hill Book Company, New York, 1954. (Chapter 1, Section VIII.)

Davis, H.D., “Understanding Contamination,” Hydraulics & Pneumatics, No. 1960. (Chapter 1, Section VIII.)

“Design Manual for Rolling Diaphragms,” Bellofram Corporation. (Chapter 1, Section Ill.)

Diss, E., Karam, H., Jones, C., “Practical Way to Size Safety Disks,” Chemical Engineering, Sept. 1961. (Chapter 1, Section VIII.)

Elonka, S., “How About Prestressing Your Bolts,” Power, April 1961, Pages 176-177. (Chapter 1. Section V.)

Elonka, S., “Let’s Talk About Bolt Stretch and Measurement,” Power, May 1961, 190-191. (Chapter 1, Section V.)

“Equipment Available for High Pressure Systems,” Industrial & Engineering Chemistry, Vol. 48, Part I, Jan-June 1956, Pages 827-834. (Chapter 1, Section Ill.)

Fogle, W., “Fogle’s Engineers Handbook,” 1959. (General Reference.)

Fredrick, D.D., Porter, R.L., “A High Pressure Air Driven Pump,” Industrial and Engineering Chemistry, Vol. 49, Part II, July-Dec. 1957. (Chapter 1, Section Ill.)

Fox, D.H., Stephensen, F.W., “Prospective Materials for Protective Shielding Around High Pressure Checkout Areas,” Tehcnical Memorandum No. MIL-MIL, Chrysler Corp., Sept. 1957. (Chapter 1, Section VIII.)

Gasche, F., “Design of Reactors and Closures,” Industrial and Engineering Chemistry, Vol, 48, Part I, Jan-June 1956, Pages 838-840. (Chapter 1, Section Ill.)

Georges, T.C., “Interstate Commerce Regulations for Transporation of Explosives and Other Dangerous Articles by Land and Water in Rail Freight Service and by Motor Vehicle (Highway and Water),” Tariff No. 13, Interstate Commerce Commission, New York, Sept. 1960. (Chapter 1, Section Ill.)

Giacobbe, J.B., “Tips on Stainless for Aircraft Hydraulics,” Aviation Age, Aug. 1952. (Chapter 1, Section Ill.)

“Handbook for Hydrogen Handling Equipment,” A.D. Little, Inc. (Chapter 1, Section Ill.)

“Handling and Storage of Liquid Propellants,” Office of Director of Defense Research and Engineering, Washington, D.C., March 1961. (Chapter 1, Section VIII.)

Jacobs, R.B., “Cryogenic Piping System Considerations,” Heating, Piping and Air Conditioning, Feb. 1960. (Chapter 1, Section II.)

Jacobs, R.B., “Cryogenic Piping System Design and Installation,” Heating, Piping and Air Conditioning, May 1960. (Chapter 1, Section II.)

Jacobs, R.B., and Richards, R.J., “Valve for Cold Fluids,” The Review of Scientific Instruments, Vol. 26, No. 7, July 1955. (Chapter 1, Section III.)

“J.I.C Hydraulic Standards for Industrial Equipment,” Joint Industry Conference, Detroit, Michigan. (General Reference.)

Kiefer,R.W., “Safety of High Pressure,” Industrial and Engineering Chemistry, Vol, 49, Part II, July-Dec. 1957. (Chapter 1, Section VIII.)

Kropschot, R.H., “Cryogenic Insulation,” National Bureau of Standards, Boulder, Colorado. (Chapter 1, Section III.)

“Liquid Level Indicator for Condensed Gases At Low Temperatures,” National Bureau of Standards, Boulder, Colorado. (Chapter 1, Section III.)

Loving, F.A., “Barricading Hazardous Reactions,” Industrial and Engineering Chemistry, Vol. 49, Part II, July-Dec. 1957, Pages 1744-1746. (Chapter 1, Section VIII.)

“Low Temperature Insulation,” National Bureau of Standards, Boulder, Colorado. (Chapter 1, Section III and Chapter 6.)

“Low Temperature Materials of Construction Series,” Chemical Engineering; May 30, 1960 (Carbon Steel); June 27, 1960 (Alloy Steel); July 11, 1960 (Stainless Steel); July 25, 1960 (Nickel Alloys); Aug 8, 1960 (Aluminum); Sept 19, 1960 (Copper). (Chapter 1, Section II.)

Lowenstein, J.G., “Calculate Adequate Rupture Disc Size,” Chemical Engineering, Jan. 13, 1958. (Chapter 1, Section VIII.)

Maccary, R.R., “How to Select Pressure-Vessel Size,” Chemical Engineering, Oct. 17, 1960. (Chapter 1, Section III.)

Maccary, R.R., “Pressure Vessel Design for High or Cryogenic Temperatures,” Chemical Engineering, Nov. 1960. (Chapter 1, Section III.)

Mac Cutcheon, S.M., “Safety,” Industrial and Engineering Chemistry, Vol. 48, Part I, Jan.-June 1956, Pages 97A-98A. (Chapter 1, Section VIII.)

“Machinery’s Handbook,” 15th Ed., The Industrial Press Publishers, New York, 1958. (General Reference.)

Mahanay, J.W., “Ground Support Compressors,” Missile Design and Development, Oct. 1959. (Chapter 1, Section II.)

Marks, L.S., “Mechanical Engineer’s Handbook,” 6th Ed., McGraw-Hill Book Company Inc., New York, 1958. (General Reference.)

“Materials Selector Issue,” Materials in Design Engineering, Vol. 52, No. 6, Mid-Nov. 1960. (Chapter 1, Section II.)

Military Specification MIL-F-5509A, “Fittings and Fluid Connection,” July 1954. (Chapter 1, Section III.)

“Multiple-Layer Insulations,” Linde Co. (Chapter 1, Section III.)

“NAVCO Piping Data Log,” Ed. 9, National Valve and Manufacturing Co., Pittsburgh, 1956. (General Reference.)

NAVORD O.D. 6269, “Torpedoes Mark 13, 14, 15 and 23 Types - Air Flasks,” U.S. Naval Torpedo Station, Newport, R.I., Oct. 1945. (Chapter 1, Section VI.)

NAVPERS 16193, “Basic Hydraulics,” Aug. 1945. (Chapter 1, Section III.)

NFPA No. 68, “Guide for Explosion Venting,” National Fire Protection Assn., Boston, 1954. (Chapter 1, Section VIII.)

Palmer, H.K., “Water Hammer in Hydraulic Systems,” Machine Design, Sept. 1952. (Chapter 1, Section II.)

Peckner, D., “Ultra High Pressures Create New Materials,” Materials in Design Engineering, Vol. 54, No. 3, Sept. 1961. (Chapter 1, Section II.)

Perry, J.H., “High Pressure Technique,” Chemical Engineers Handbook, McGraw-Hill Book Company, Inc., New York, 1950, Pages 1234-1262. (General Reference.)

Peterman, R.J., :Spiral-Wrap Hose for High Pressure,” Hydraulics and Pneumatics, July 1961. (Chapter 1, Section III.)

Porteous, L.G., Nelson, R.A., “Open Sesame to Bomb Design,” Research/Development, June 1961. (Chapter 1, Section VIII.)

Publication 513-P-2, “Propulsion Field Laboratory Mechanics Handbook,” Rocketdyne, Canoga Park, Calif. (General Reference.)

Ramberg, E.M., “Corrosion Resistant Hose: Where Does Teflon Fit In?” Chemical Engineering, Feb. 20, 1961. (Chapter 1, Section Ill.)

Randall, P.N., Bland, J., Dudley, W.M., Jaecks, E.B., “Effects of Gaseous Detonations Upon Vessels and Piping,” Chemical Engineering Progress, Dec. 1957. (Chapter 1, Section VIII.)

Redhead, P.A., Steinherz, H.A., “Ultrahigh Vacuum,” Scientific American Inc., New York 36, New York, March 1962. (Chapter 6.)

Report No. R-1522, “Lubricants for Missile Systems,” Frankford Arsenal, Philadelphia, Pennsylvania. (Chapter 1, Section Il.)

“Safety in Welding and Cutting,” American Welding Society, New York, New York. (General Reference.)

Sandaker, J.H., Markovits, J.A., Bredtschneider, K.B., “High Pressure (10,000 psi) Piping, Flanged Joints, Fittings, and Valves for Coal-Hydrogenation Service,” Pressure Vessel and Piping Design Collected Papers 1957-1959, ASME, New York, 1960. (Chapter 1, Section Ill.)

Scott, R.B., “Cryogenic Engineering,” National Bureau of Standards, Boulder, Colorado. (Chapter 1, Section Ill.)

Scott, R.W., “Electrical Safety Guide to Hazardous Process Areas,” Chemical Engineering, July 10, 1961. (Chapter 1, Section VIII.)

Special Report No. 102, “Basic Procedure for Design of Pipelines and Pipeline Supports for Propellant-Loading System Complex 65-2 WS107A-1,” Arthur D. Little, Inc. Cambridge, Mass., March 1959. (Chapter 1, Section V.)

“Standard of the Hydraulics Institute,” 10th Ed., Revisions 1 and 2. (Chapter 1, Section Ill.)

Steinherz, H.A., “High Vacuum Technology and Equipment,” Chemical Engineering, August 20, 1962. (Chapter 6.)

The American Society of Mechanical Engineers, “Code for Pressure Piping,” ASA B31.1, New York, 1955. (Chapter 1, Sections III, IV, and V.)

The American Society of Mechanical Engineers, “Section VIII, Unfired Pressure Vessels,” Boiler and Pressure Vessel Code, New York, 1959. (Chapter 1, Sections III and VI.)

“The Seals Handbook,” Machine Design, Jan. 1961. (Chapter 1, Section III.)

“The Transfer of Liquefied Gases,” National Bureau of Standards, Boulder, Colorado. (Chapter 1, Section Ill.)

TO 00-20K-1, “Inspection and Age Control, USAF Equipment,” Air Force Technical Order. (Chapter 3, Section Ill.)

TO 1-1A-1, “Engineering Handbook for Aircraft Repair.” General Manual for Structural Repair, Air Force Technical Order. (Chapter 1, Section IV.)

TO 1-1A-8, “Aircraft Structural Hardware,” Air Force Technical Order. (Chapter 1, Section IV.)

TO 1C-124A-2-3A, “Maintenance Instructions, Volume Ill, USAF Series C-124A and C-124C Aircraft Pneudraulics,” Air Force Technical Order, April 1960. (Chapter 3, Section Ill.)

TO 42B5-1-1, “Quinquennial Test of Gas Chambers,” Air Force Technical Order, Aug. 1949. (Chapter 1, Section VII.)

TO 42B5-1-2, “Gas Cylinders Storage Type Use, Handling and Maintenance,” Air Force Technical Order. (Chapter 1, Section Ill.)

TO 42B6-1-1, “Quality Control of Liquid Oxygen Propellant and Aviator’s Breathing Oxygen,” Air Force Technical Order. (Chapter 3.)

TO 42E1-1-1, “Aircraft Hose, High-, Medium-, and Low-Pressure Hydraulic, Pneumatic, Fuel, Oil, Coolant, Water, and Alcohol Resistant,” Air Force Technical Order, Nov. 1960. (Chapter 3, Section Ill.)

TO 42E1-1-6, “Aircraft High Pressure (3000 psi) Hydraulic, Pneumatic Hose and Hose Assemblies,” Air Force Technical Manual. (Chapter 3, Section Ill.)

TO 44H1-1-10, “General Assembly and Installation Instructions for M.S. Flareless Tube Fittings,” AF BAFB, ALA, Dec. 1959. (Chapter 1, Section IV.)

Technical Data Sheets L-601 and L-602, “Check Valves-Solenoid Valves,” The W.M. Lanagan co., Inc., Costa Mesa, Calif. (Chapter 1, Section Il.)

“Training Guide Handbook for Missile Support Pnuematic and Fluid Systems,” Directorate of Rocket Propulsion, Edwards Air Force Base, Calif., Oct. 1960. (General Reference.)

“Tube Fitters Manual,” Handbook No. 111, The Parker Appliance Company, Cleveland, Ohio. (Chapter 1, Section IV.)

“Understanding Explosions,” Consulting Engineer, Aug. 1953; Pages 39-44. (Chapter 1, Section VIII.)

“Vacuum Problems and Techniques,” Clinton Engineer Works, Tennessee Eastman Corp., Oak Ridge, Tenn. (Chapter 6.)

Vilbrandt, F.C., “Chemical Engineering Plant Design,” McGraw-Hill Book Company, Inc., New York, 1942. (Chapter 1, Section Ill.)

Voorhees, H.R., Sliepcevich, C.M., Freeman, J.W., “Thick-Walled Pressure Vessels,” Industrial and Engineering Chemistry, Vol. 48, Part I, Jan.-June 1956, Pages 872-881. (Chapter 1, Section Ill.)

“Weapon Data,” National Defense Research Committee, Princeton University Station, Sept. 1945. (Chapter 1, Section Ill.)

APPENDIX D

PREFORMED PACKINGS AND BACKUP RINGS CROSS-REFERENCE

NOTE

- All dimensions are given in inches.
- CHARTS 2A, 3A, AND 4A: O-ring sizes -013 through -028, -117 through -149, and -223 through -247 of MS28775, MS29561, MS29513, and M83248/1 are intended for use as static seals, and are not to be used in applications involving reciprocating or rotary motion.
- CHARTS 1, 2A, 2C, 3A, 3B, 4A, AND 4B: O-rings made of Buna N have a shelf life of 180 months; O-rings in stock with cure dates exceeding 180 months should be discarded.
- CHART 1: In the Service and Specification Temperature Range column, temperatures in parentheses are nominal values.
- CHARTS 1, 2A, 3A, AND 4A: When an O-ring made of a fluorocarbon material is to be substituted for one made of Buna N, special care should be taken with regard to temperature ranges. Fluorocarbon O-rings may not be adequate if they are to be used in aircraft which operate primarily in frigid environments, since they are in general less tolerant of low temperatures than those made of Buna N.

Chart 1 PREFORMED PACKINGS AND BACKUP RINGS				
BASIC PART NUMBER AND SPECIFICATION	PART NAME, APPLICATION, AND MATERIAL	SERVICE AND SPECIFICATION TEMPERATURE RANGE	SUPERSEDING PART NUMBER	CHART
AN6227 MIL-P-5516	O-ring, gland, Buna N	MIL-H-5606 and MIL-H-83282 hydraulic fluids -65°F to 160°F	MS28775	2A
AN6230 MIL-P-5516	O-ring, gland, Buna N	MIL-H-5606 and MIL-H-83282 hydraulic fluids -65°F to 160°F	MS28775	2A
2( )PSI-30-5 MIL-P-5516	O-ring, gland, Buna N	MIL-H-5606 and MIL-H-83282 hydraulic fluids -65°F to 160°F	MS28775	2A
LS4629 MIL-P-25732	O-ring, gland, Buna N	MIL-H-5606 and MIL-H-83282 hydraulic fluids -65°F to 275°F	MS28775	2A
MS28775 MIL-P-25732	O-ring, gland, Buna N	MIL-H-5606 and MIL-H-83282 hydraulic fluids -65°F to 275°F	None	2A
LS4564 MIL-R-8791	Backup ring (single-turn), gland, Teflon	MIL-H-5606 and MIL-H-83282 hydraulic fluids -65°F to 275°F	LS4565	2B-1
LS4565 MIL-R-8791	Backup ring (single-turn), gland, Teflon	MIL-H-5606 and MIL-H-83282 hydraulic fluids -65°F to 275°F	None	2B-1
MS28774 MIL-R-8791	Backup ring (single-turn), gland, Teflon	MIL-H-5606 and MIL-H-83282 hydraulic fluids -65°F to 275°F	None	2B-1
MS28782 MIL-R-8791	Backup ring (double-turn), gland, Teflon	MIL-H-5606 and MIL-H-83282 hydraulic fluids -65°F to 275°F	None	2B-2
MS28783 MIL-R-8791	Backup ring (double-turn), gland, Teflon	MIL-H-5606 and MIL-H-83282 hydraulic fluids -65°F and 275°F	None	2B-2
AN6290 MIL-P-5510	O-ring, boss, Buna N	MIL-H-5606 and MIL-H-83282 hydraulic fluids -65°F to 160°F	MS28775	2C
MS28778 MIL-P-5510	O-ring, boss, Buna N	MIL-H-5606 and MIL-H-83282 hydraulic fluids -65°F to 160°F	None	2C
LS4634 None	O-ring, boss, Buna N	MIL-H-5606 and MIL-H-83282 hydraulic fluids -65°F to 275°F	STSPK300	2C
STSPK300 None	O-ring, boss, Buna N	MIL-H-5606 and MIL-H-83282 hydraulic fluids -65°F to 275°F	3( )N168-80	2C

Chart 1 PREFORMED PACKINGS AND BACKUP RINGS				
BASIC PART NUMBER AND SPECIFICATION	PART NAME, APPLICATION, AND MATERIAL	SERVICE AND SPECIFICATION TEMPERATURE RANGE	SUPERSEDING PART NUMBER	CHART
3 ( )N168-80 None	O-ring, boss, Buna N	MIL-H-5606 and MIL-H-83282 hydraulic fluids 65°F to 275°F	3( )N756-76	2C
3 ( )N756-76 MIL-P-83461	O-ring, boss, Buna N	MIL-H-5606 and MIL-H-83282 hydraulic fluids 65°F to 275°F	MS83248/2	2C
3( )PSI-30-5 MIL-P-5516	O-ring, boss, Buna N	MIL-H-5606 and MIL-H-83282 hydraulic fluids 65°F to 160°F	None	2C
LS4764 MIL-R-8791	Backup ring, boss Teflon	MIL-H-5606 and MIL-H-83282 hydraulic fluids 65°F to 275°F	MS9058	2D
MS9058 MIL-R-8791	Backup ring, boss Teflon	MIL-H-5606 and MIL-H-83282 hydraulic fluids 65°F to 275°F	MS28773	2D
MS28773 MIL-R-8791	Backup ring, boss Teflon	MIL-H-5606 and MIL-H-83282 hydraulic fluids 65°F to 275°F	None	2D
AN123856 to AN123934 AMS7274	O-ring, gland Buna N	MIL-L-7808 and MIL-L-23699 lubricating oils -65°F to (300°F)	None	3A
LS5041 None	O-ring, gland Buna N	MIL-L-7808 and MIL-L-23699 lubricating oils -65°F to 300°F	None	3A
MS9241 AMS7272	O-ring, gland, Buna N	MIL-L-7808 and MIL-L-23699 lubricating oils (-55°F) to 300°F	None	3A
MS29561 MIL-R-7362	O-ring, gland, Buna N	MIL-L-7808 and MIL-L-23699 lubricating oils (-55°F) to (275°F)	None	3A
LS5041 None	O-ring, boss Buna N	MIL-L-7808 and MIL-L-23699 lubricating oils -65°F to 300°F	None	3B
MS9355 AMS7272	O-ring, boss Buna N	MIL-L-7808 and MIL-L-23699 lubricating oils (-55°F) to 300°F	None	3B
NAS617 MIL-R-7362	O-ring, boss, Buna N	MIL-L-7808 and MIL-L-23699 lubricating oils (-55°F) to (275°F)	None	3B
AN123956 to AN124034 AMS7270	O-ring, gland, Buna N	JP-4, JP-5, JP-8, Jet A, Jet A-l, and Jet B fuels -65°F to (200°F)	None	4A

Chart 1 PREFORMED PACKINGS AND BACKUP RINGS				
BASIC PART NUMBER AND SPECIFICATION	PART NAME, APPLICATION, AND MATERIAL	SERVICE AND SPECIFICATION TEMPERATURE RANGE	SUPERSEDING PART NUMBER	CHART
MS9021 AMS7271	O-ring, gland, Buna N	JP-4, JP-5, JP-8, Jet A, Jet A-l, and Jet B fuels -65°F to (200°F)	None	4A
MS29513 MIL-P-5315	O-ring, gland, Buna N	JP-4, JP-5, JP-8, Jet A, Jet A-l, and Jet B fuels -65°F to 160°F	None	4A
MS9020 AMS7271	O-ring, boss, Buna N	JP-4, JP-5, JP-8, Jet A, Jet A-l, and Jet B fuels -65°F to (200°F)	None	4B
MS29512 MIL-P-5315	O-ring, boss, Buna N	JP-4, JP-5, JP-8, Jet A, Jet A-l and Jet B fuels -65°F to 160°F	None	4B
MS9068 AMS3304	O-ring, gland, silicone	Breathing oxygen -85°F to 401°F	None	5A
906 None	O-ring, boss, silicone	Breathing oxygen -70°F to 450°F	MS9385	5B
MS9385 AMS7267	O-ring, boss, silicone	Breathing oxygen -85°F to 500°F	None	5B
NAS1593 MIL-R-25897	O-ring, gland, fluorocarbon	MIL-H-5606 and MIL-H-83282 hydraulic fluids; MIL-L-7808 and MIL-L-23699 lubricating oils; and JP-4, JP-5, Jet A, Jet A-l, and Jet B fuels -30°F to 500°F	M83248/1	2A, 3A, and 4A
NAS1594 MIL-R-25897	O-ring, gland, fluorocarbon	MIL-H-5606 and MIL-H-83282 hydraulic fluids; MIL-L-7808 and MIL-L-23699 lubricating oils; and JP-4, JP-5, Jet A, Jet A-l, and Jet B fuels -30°F to 500°F	M83248/2	2A, 3A, and 4A
M83248/1 MIL-R-83248	O-ring, gland, flurocarbon	MIL-H-5606 and MIL-H-83282 hydraulic fluids; MIL-L-7808 and MIL-L-23699 lubricating oils; and JP-4, JP-5, Jet A, Jet A-l, and Jet B fuels -30°F to 500°F	None	2A, 3A, and 4A
NAS1595 MIL-R-25897	O-ring, boss, fluorocarbon	MIL-H-5606 and MIL-H-83282 hydraulic fluids; MIL-L-7808 and MIL-L-23699 lubricating oils; and JP-4, JP-5, Jet A, Jet A-l, and Jet B fuels -30°F to 500°F	M83248/1	2C, 3B, and 4B

Chart 1 PREFORMED PACKINGS AND BACKUP RINGS

BASIC PART NUMBER AND SPECIFICATION	PART NAME, APPLICATION, AND MATERIAL	SERVICE AND SPECIFICATION TEMPERATURE RANGE	SUPERSEDING PART NUMBER	CHART
NAS1596 MIL-R-25897	O-ring, boss, fluorocarbon	MIL-H-5606 and MIL-H-83282 hydraulic fluids; MIL-L-7808 and MIL-L-23699 lubricating oils; and JP-4, JP-5, Jet A, Jet A-1, and Jet B fuels -30°F to 500°F	M83248/2	2C, 3B, and 4B
M83248/2 MIL-R-83248	O-ring, boss, fluorocarbon	MIL-H-5606 and MIL-H-83282 hydraulic fluids; MIL-L-7808 and MIL-L-23699 lubricating oils; and JP-4, JP-5, Jet A, Jet A-1, and Jet B fuels -30°F to 500°F	None	2C, 3B, and 4B
M25988/1 MIL-R-25988	O-ring, gland, fluorosilicone	MIL-7808 and MIL-L-23699 lubricating oils; and JP-4, JP-5, Jet A, Jet A-1, and Jet B fuels (-85°F) to (350°F)	None	3A and 4A

Chart 2A GLAND O-RING FOR USE IN MIL-H-5606 AND MIL-H-83282 HYDRAULIC FLUIDS

AS 568A STANDARDIZED DASH NO.	NOMINAL DIMENSIONS ID	NOMINAL DIMENSIONS W	AN6227	AN6230	2()PSI-30-5	LS4629	MS28775	NAS1593	NAS1594	M83248/1
-001	0.029	0.040					-001			-001
-002	0.042	0.050					-002			-002
-003	0.056	0.060					-003			-003
-004	0.070	0.070					-004	-004	-004	004
-005	0.101	0.070					-005	-005	-005	-005
-006	0.114	0.070	-1		-006		-006	-006	-006	-006
-007	0.145	0.070	-2		-007		-007	-007	-007	-007
-008	0.176	0.070	-3		-008		-008	-008	-008	-008
-009	0.208	0.070	-4		-009		-009	-009	-009	-009
-010	0.239	0.070	-5		-010		-010	-010	-010	-010
-011	0.301	0.070	-6		-011		-011	-011	-011	-011
-012	0.364	0.070	-7		-012		-012	-012	-012	-012
-013	0.426	0.070					-013	-013	-013	-013
-014	0.489	0.070					-014	-014	-014	-014
-015	0.551	0.070					-015	-015	-015	-015
-016	0.614	0.070					-016	-016	-016	-016
-017	0.676	0.070					-017	-017	-017	-017
-018	0.739	0.070					-018	-018	-018	-018
-019	0.801	0.070					-019	-019	-019	-019
-020	0.864	0.070					-020	-020	-020	-020
-021	0.926	0.070					-021	-021	-021	-021
-022	0.989	0.070					-022	-022	-022	-022
-023	1.051	0.070					-023	-023	-023	-023
-024	1.114	0.070					-024	-024	-024	-024
-025	1.176	0.070					-025	-025	-025	-025
-026	1.239	0.070					-026	-026	-026	-026
-027	1.301	0.070					-027	-027	-027	-027
-028	1.364	0.070					-028	-028	-028	-028
-029	1.489	0.070					-029	-029	-029	-029
-030	1.614	0.070					-030	-030	-030	-303
-031	1.739	0.070					-031	-031	-031	-031
-032	1.864	0.070					-032	-032	-032	-032
-033	1.989	0.070					-033	-033	-033	-033
-034	2.114	0.070					-034	-034	-034	-034
-035	2.239	0.070					-035	-035	-035	-035
-036	2.364	0.070					-036	-036	-036	-036
-037	2.489	0.070					-037	-037	-037	-037
-038	2.614	0.070					-038	-038	-038	-038
-039	2.739	0.070					-039	-039	-039	-039
-040	2.864	0.070					-040	-040	-040	-040
-041	2.989	0.070					-041	-041	-041	-041
-042	3.239	0.070					-042	-042	-042	-042
-043	3.489	0.070					-043	-043	-043	-043
-044	3.739	0.070					-044	-044	-044	-044
-045	3.989	0.070					-045	-045	-045	-045
-046	4.239	0.070					-046	-046	-046	-046
-047	4.489	0.070					-047	-047	-047	-047
-048	4.739	0.070					-048	-048	-048	-048
-049	4.989	0.070					-049	-049	-049	-049
-050	5.239	0.070					-050	-050	-050	-050
-051 through -101	O-ring sizes not assigned.									
-102	0.049	0.103					-102			-102
-103	0.081	0.103					-103			-103
-104	0.112	0.103					-104			-104
-105	0.143	0.103					-105			-105
-106	0.174	0.103					-106			-106
-107	0.206	0.103					-107			-107
-108	0.237	0.103					-108			-108
-109	0.299	0.103					-109			-109
-110	0.362	0.103	-8		-110		-110	-110	-110	-110
-111	0.424	0.103	-9		-111		-111	-111	-111	-111
-112	0.487	0.103	-10		-112		-112	-112	-112	-112

Chart 2A GLAND O-RING FOR USE IN MIL-H-5606 AND MIL-H-83282 HYDRAULIC FLUIDS (CONTD)

AS 568A STANDARDIZED DASH NO.	NOMINAL DIMENSIONS ID	NOMINAL DIMENSIONS W	AN6227	AN6230	2()PSI-30-5	LS4629	MS28775	NAS1593	NAS1594	M83248/1
-113	0.549	0.103	-11		-113		-113	-113	-113	-113
-114	0.612	0.103	-12		-114		-114	-114	-114	-114
-115	0.674	0.103	-13		-115		-115	-115	-115	-115
-116	0.737	0.103	-14		-116		-116	-116	-116	-116
-117	0.799	0.103					-117	-117	-117	-117
-118	0.862	0.103					-118	-118	-118	-118
-119	0.924	0.103					-119	-119	-119	-119
-120	0.987	0.103					-120	-120	-120	-120
-121	1.049	0.103					-121	-121	-121	-121
-122	1.112	0.103					-122	-122	-122	-122
-123	1.174	0.103					-123	-123	-123	-123
-124	1.237	0.103					-124	-124	-124	-124
-125	1.299	0.103					-125	-125	-125	-125
-126	1.362	0.103					-126	-126	-126	-126
-127	1.424	0.103					-127	-127	-127	-127
-128	1.487	0.103					-128	-128	-128	-128
-129	1.549	0.103					-129	-129	-129	-129
-130	1.612	0.103					-130	-130	-130	-130
-131	1.674	0.103					-131	-131	-131	-131
-132	1.737	0.103					-132	-132	-132	-132
-133	1.799	0.103					-133	-133	-133	-133
-134	1.862	0.103					-134	-134	-134	-134
-135	1.925	0.103					-135	-135	-135	-135
-136	1.987	0.103					-136	-136	-136	-136
-137	2.050	0.103					-137	-137	-137	-137
-138	2.112	0.103					-138	-138	-138	-138
-139	2.175	0.103					-139	-139	-139	-139
-140	2.237	0.103					-140	-140	-140	-140
-141	2.300	0.103					-141	-141	-141	-141
-142	2.362	0.103					-142	-142	-142	-142
-143	2.425	0.103					-143	-143	-143	-143
-144	2.487	0.103					-144	-144	-144	-144
-145	2.550	0.103					-145	-145	-145	-145
-146	2.612	0.103					-146	-146	-146	-146
-147	2.675	0.103					-147	-147	-147	-147
-148	2.737	0.103					-148	-148	-148	-148
-149	2.800	0.103					-149	-149	-149	-149
-150	2.862	0.103					-150	-150	-150	-150
-151	2.987	0.103					-151	-151	-151	-151
-152	3.237	0.103					-152	-152	-152	-152
-153	3.487	0.103					-153	153	-153	-153
-154	3.737	0.103					-154	-154	-154	-154
-155	3.987	0.103					-155	-155	-155	-155
-156	4.237	0.103					-156	-156	-156	-156
-157	4.487	0.103					-157	-157	-157	-157
-158	4.737	0.103					-158	-158	-158	-158
-159	4.987	0.103					-159	-159	-159	-159
-160	5.237	0.103					-160	-160	-160	-160
-161	5.487	0.103					-161	-161	-161	-161
-162	5.737	0.103					-162	-162	-162	-162
-163	5.987	0.103					-163	-163	-163	-163
-164	6.237	0.103					-164	-164	-164	-164
-165	6.487	0.103					-165	-165	-165	-165
-166	6.737	0.103					-166	-166	-166	-166
-167	6.987	0.103					-167	-167	-167	-167
-168	7.237	0.103					-168	-168	-168	-168
-169	7.487	0.103					-169	-169	-169	-169
-170	7.737	0.103					-170	-170	-170	-170
-171	7.987	0.103					-171	-171	-171	-171
-172	8.237	0.103					-172	-172	-172	-172
-173	8.487	0.103					-173	-173	-173	-173
-174	8.737	0.103					-174	-174	-174	-174

Chart 2A GLAND O-RING FOR USE IN MIL-H-5606 AND MIL-H-83282 HYDRAULIC FLUIDS (CONTD)

AS 568A STANDARDIZED DASH NO.	NOMINAL DIMENSIONS ID	NOMINAL DIMENSIONS W	AN6227	AN6230	2()PSI-30-5	LS4629	MS28775	NAS1593	NAS1594	M83248/1
-175	8.987	0.103					-175	-175	-175	-175
-176	9.237	0.103					-176	-176	-176	-176
-177	9.487	0.103					-177	-177	-177	-177
-178	9.737	0.103					-178	-178	-178	-178
-179 through -200	O-ring sizes not assigned.									
-201	0.171	0.139					-201			-201
-202	0.234	0.139					-202			-202
-203	0.296	0.139					-203			-203
-204	0.359	0.139					-204			-204
-205	0.421	0.139					-205			-205
-206	0.484	0.139					-206			-206
-207	0.546	0.139					-207			-207
-208	0.609	0.139					-208			-208
-209	0.671	0.139					-209			-209
-210	0.734	0.139	-15		-210		-210	-210	-210	-210
-211	0.796	0.139	-16		-211		-211	-211	-211	-211
-212	0.859	0.139	-17		-212		-212	-212	-212	-212
-213	0.921	0.139	-18		-213		-213	-213	-213	-213
-214	0.984	0.139	-19		-214		-214	-214	-214	-214
-215	1.046	0.139	-20		-215		-215	-215	-215	-215
-216	1.109	0.139	-21		-216		-216	-216	-216	-216
-217	1.171	0.139	-22		-217		-217	-217	-217	-217
-218	1.234	0.139	-23		-218		-218	-218	-218	-218
-219	1.296	0.139	-24		-219		-219	-219	-219	-219
-220	1.359	0.139	-25		-220		-220	-220	-220	-220
-221	1.421	0.139	-26		-221		-221	-221	-221	-221
-222	1.484	0.139	-27		-222		-222	-222	-222	-222
-223	1.609	0.139		-1	-223		-223	-223	-223	-223
-224	1.734	0.139		-2	-224		-224	-224	-224	-224
-225	1.859	0.139		-3	-225		-225	-225	-225	-225
-226	1.984	0.139		-4	-226		-226	-226	-226	-226
-227	2.109	0.139		-5	-227		-227	-227	-227	-227
-228	2.234	0.139		-6	-228		-228	-228	-228	-228
-229	2.359	0.139		-7	-229		-229	-229	-229	-229
-230	2.484	0.139		-8	-230		-230	-230	-230	-230
-231	2.609	0.139		-9	-231		-231	-231	-231	-231
-232	2.734	0.139		-10	-232		-232	-232	-232	-232
-233	2.859	0.139		-11	-233		-233	-233	-233	-233
-234	2.984	0.139		-12	-234		-234	-234	-234	-234
-235	3.109	0.139		-13	-235		-235	-235	-235	-235
-236	3.234	0.139		-14	-236		-236	-236	-236	-236
-237	3.359	0.139		-15	-237		-237	-237	-237	-237
-238	3.484	0.139		-16	-238		-238	-238	-238	-238
-239	3.609	0.139		-17	-239		-239	-239	-239	-239
-240	3.734	0.139		-18	-240		-240	-240	-240	-240
-241	3.859	0.139		-19	-241		-241	-241	-241	-241
-242	3.984	0.139		-20	-242		-242	-241	-242	-242
-243	4.109	0.139		-21	-243		-243	-243	-243	-243
-244	4.234	0.139		-22	-244		-244	-244	-244	-244
-245	4.359	0.139		-23	-245		-245	-245	-245	-245
-246	4.484	0.139		-24	-246		-246	-246	-246	-246
-247	4.609	0.139		-25	-247		-247	-247	-247	-247
-248	4.734	0.139			-248	-26	-248	-248	-248	-248
-249	4.859	0.139			-249		-249	-249	-249	-249
-250	4.984	0.139			-250		-250	-250	-250	-250
-251	5.109	0.139			-251		-251	-251	-251	-251
-252	5.234	0.139			-252	-30	-252	-252	-252	-252
-253	5.359	0.139			-253		-253	-253	-253	-253
-254	5.484	0.139			-254		-254	-254	-254	-254
-255	5.609	0.139			-255		-255	-255	-255	-255
-256	5.734	0.139			-256		-256	-256	-256	-256
-257	5.859	0.139			-257		-257	-257	-257	-257
-258	5.984	0.139			-258		-258	-258	-258	-258

Chart 2A GLAND O-RING FOR USE IN MIL-H-5606 AND MIL-H-83282 HYDRAULIC FLUIDS (CONTD)

AS 568A STANDARDIZED DASH NO.	NOMINAL DIMENSIONS ID	NOMINAL DIMENSIONS W	AN6227	AN6230	2()PSI-30-5	LS4629	MS28775	NAS1593	NAS1594	M83248/1
-259	6.234	0.139			-259		-259	-259	-259	-259
-260	6.484	0.139			-260	-38	-260	-260	260	-260
-261	6.734	0.139			-261		-261	-261	-261	-261
-262	6.981	0.139			-262	-40	-262	-262	-262	-262
-263	7.234	0.139			-263		-263	-263	-263	-263
-264	7.484	0.139			-264		-264	-264	-264	-264
-265	7.734	0.139			-265		-265	-265	265	-265
-266	7.984	0.139			-266		-266	-266	-266	-266
-267	8.234	0.139			-267		-267	-267	-267	-267
-268	8.484	0.139			-268	-46	-268	-268	-268	-268
-269	8.734	0.139			-269		-269	-269	-269	-269
-270	8.984	0.139			-270		-270	-270	-270	-270
-271	9.234	0.139			-271		-271	-271	-271	-271
-272	9.484	0.139			-272	-50	-272	-272	-272	-272
-273	9.734	0.139			-273		-273	-273	-273	-273
-274	9.984	0.139			-274		-274	-274	-274	-274
-275	10.484	0.139					-275	-275	-275	-275
-276	10.984	0.139					-276	-276	-276	-276
-277	11.484	0.139					-277	-277	-277	-277
-278	11.984	0.139					-278	-278	-278	-278
-279	12.984	0.139					-279	-279	-279	-279
-280	13.984	0.139					-280	-280	-280	-280
-281	14.984	0.139					-281	-281	-281	-281
-282	15.955	0.139					-282			-282
-283	16.955	0.139					-283			-283
-284	17.955	0.139					-284			-284
-285 through -308	O-ring sizes not assigned.									
-309	0.412	0.210					-309			-309
-310	0.475	0.210					-310			-310
-311	0.537	0.210					-311			-311
-312	0.600	0.210					-312			-312
-313	0.662	0.210					-313			-313
-314	0.725	0.210					-314			-314
-315	0.787	0.210					-315			-315
-316	0.850	0.210					-316			-316
-317	0.912	0.210					-317			-317
-318	0.975	0.210					-318			-318
-319	1.037	0.210					-319			-319
-320	1.100	0.210					-320			-320
-321	1.162	0.210					-321			-321
-322	1.225	0.210					-322			-323
-324	1.350	0.210					-324			-324
-325	1.475	0.210	-28		-325		-325	-325	-325	-325
-326	1.600	0.210	-29		-326		-326	-326	-326	-326
-327	1.725	0.210	-30		-327		-327	-327	-327	-327
-328	1.850	0.210	-31		-328		-328	-328	-328	-328
-329	1.975	0.210	-32		-329		-329	-329	-329	-329
-330	2.100	0.210	-33		-330		-330	-330	-330	-330
-331	2.225	0.210	-34		-331		-331	-331	-331	-331
-332	2.350	0.210	-35		-332		-332	-332	-332	-332
-333	2.475	0.210	-36		-333		-333	-333	-333	-333
-334	2.600	0.210	-37		-334		-334	-334	-334	-334
-335	2.725	0.210	-38		-335		-335	-335	-335	-335
-336	2.850	0.210	-39		-336		-336	336	-336	-336
-337	2.975	0.210	-40		-337		-337	-337	-337	-337
-338	3.100	0.210	-41		-338		-338	-338	-338	-338
-339	3.225	0.210	-42		-339		-339	-339	-339	-339
-340	3.350	0.210	-43		-340		-340	-340	-340	-340
-341	3.475	0.210	-44		-341		-341	-341	-341	-341
-342	3.600	0.210	-45		-342		-342	-342	-342	-342
-343	3.725	0.210	-46		-343		-343	-343	-343	-343
-344	3.850	0.210	-47		-344		-344	-344	-344	-344
-345	3.975	0.210	-48		-345		-345	-345	-345	-345

Chart 2A GLAND O-RING FOR USE IN MIL-H-5606 AND MIL-H-83282 HYDRAULIC FLUIDS (CONTD)

AS 568A STANDARDIZED DASH NO.	NOMINAL DIMENSIONS ID	W	AN6227	AN6230	2()PSI-30-5	LS4629	MS28775	NAS1593	NAS1594	M83248/1
-346	4.100	0.210	-49		-346		-346	-346	-346	-346
-347	4.225	0.210	-50		-347		-347	-347	-347	-347
-348	4.350	0.210	-51		-348		-348	-348	-348	-348
-349	4.475	0.210	-52		-349		-349	-349	-349	-349
-350	4.600	0.210					-350			-350
-351	4.725	0.210					-351			-351
-352	4.850	0.210					-352			-352
-353	4.975	0.210					-353			-353
-354	5.100	0.210					-354			-354
-355	5.225	0.210					-355			-355
-356	5.350	0.210					-356			-356
-357	5.475	0.210					-357			-357
-358	5.600	0.210					-358			-358
-359	5.725	0.210					-359			-359
-360	5.850	0.210					-360			-360
-361	5.975	0.210					-361			-361
-362	6.225	0.210					-362			-362
-363	6.475	0.210					-363			-363
-364	6.725	0.210					-364			-364
-365	6.975	0.210					-365			-365
-366	7.225	0.210					-366			-366
-367	7.475	0.210					-367			-367
-368	7.725	0.210					-368			-368
-369	7.975	0.210					-369			-369
-370	8.225	0.210					-370			-370
-371	8.475	0.210					-371			-371
-372	8.725	0.210					-372			-372
-373	8.975	0.210					-373			-373
-374	9.225	0.210					-374			-374
-375	9.475	0.210					-375			-375
-376	9.725	0.210					-376			-376
-377	9.975	0.210					-377			-377
-378	10.475	0.210					-378			-378
-379	10.975	0.210					-379			-379
-380	11.475	0.210					-380			-380
-381	11.975	0.210					-381			-381
-382	12.975	0.210					-382			-382
-383	13.975	0.210					-383			-383
-384	14.975	0.210					-384			-384
-385	15.955	0.210					-385			-385
-386	16.955	0.210					-386			-386
-387	17.955	0.210					-387			-387
-388	18.955	0.210					-388			-388
-389	19.955	0.210					-389			-389
-390	20.955	0.210					-390			-390
-391	21.955	0.210					-391			-391
-392	22.940	0.210					-392			-392
-393	23.940	0.210					-393			-393
-394	24.940	0.210					-394			-394
-395	25.940	0.210					-395			-395
-396 through -424	O-ring sizes not assigned.									
-425	4.475	0.275	-88		-425		-425	-425	-425	-425
-426	4.600	0.275	-53		-426		-426	-426	-426	-426
-427	4.725	0.275	-54		-427		-427	-427	-427	-427
-428	4.850	0.275	-55		-428		-428	-428	-428	-428
-429	4.975	0.275	-56		-429		-429	-429	-429	-429
-430	5.100	0.275	-57		-430		-430	-430	-430	-430
-431	5.225	0.275	-58		-431		-431	-431	-431	-431
-432	5.350	0.275	-59		-432		-432	-432	-432	-432
-433	5.475	0.275	-60		-433		-433	-433	-433	-433
-434	5.600	0.275	-61		-434		-434	-434	-434	-434
-435	5.725	0.275	-62		-435		-435	-435	-435	-435
-436	5.850	0.275	-63		-436		-436	-436	-436	-436

Chart 2A GLAND O-RING FOR USE IN MIL-H-5606 AND MIL-H-83282 HYDRAULIC FLUIDS (CONTD)

AS 568A STANDARDIZED DASH NO.	NOMINAL DIMENSIONS ID	NOMINAL DIMENSIONS W	AN6227	AN6230	2()PSI-30-5	LS4629	MS28775	NAS1593	NAS1594	M83248/1
-437	5.975	0.275	-64		-437		-437	-437	-437	-437
-438	6.225	0.275	-65		-438		-438	-438	-438	-438
-439	6.475	0.275	-66		-439		-439	-439	-439	-439
-440	6.725	0.275	-67		-440		-440	-440	-440	-440
-441	6.975	0.275	-68		-441		-441	-441	-441	-441
-442	7.225	0.275	-69		-442		-442	-442	-442	-442
-443	7.475	0.275	-70		-443		-443	-443	-443	-443
-444	7.725	0.275	-71		-444		-444	-444	-444	-444
-445	7.975	0.275	-72		-445		-445	-445	-445	-445
-446	8.475	0.275	-73		-446		-446	-446	-446	-446
-447	8.975	0.275	-74		-447		-447	-447	-447	-447
-448	9.475	0.275	-75		-448		-448	-448	-448	-448
-449	9.975	0.275	-76		-449		-449	-449	-449	-449
-450	10.475	0.275	-77		-450		-450	-450	-450	-450
-451	10.975	0.275	-78		-451		-451	-451	-451	-451
-452	11.475	0.275	-79		-452		-452	-452	-452	-452
-453	11.975	0.275	-80		-453		-453	-453	-453	-453
-454	12.475	0.275	-81		-454		-454	-454	-454	-454
-455	12.975	0.275	-82		-455		-455	-455	-455	-455
-456	13.475	0.275	-83		-456		-446	-456	-456	-456
-457	13.975	0.275	-84		-457		-457	-457	-457	-457
-458	14.475	0.275	-85		-458		-458	-458	-458	-458
-459	14.975	0.275	-86		-459		-459	-459	-459	-459
-460	15.475	0.275	-87		-460		-460	-460	-460	-460
-461	15.955	0.275					-461			-461
-462	16.455	0.275					-462			-462
-463	16.955	0.275					-463			-463
-464	17 455	0.275					-464			-464
-465	17.955	0.275					-465			-465
-466	18.455	0.275					-466			-466
-467	18.955	0.275					-467			-467
-468	19.455	0.275					-468			-468
-469	19.955	0.275					-469			-469
-470	20.955	0.275					-470			-470
-471	21.955	0.275					-471			-471
-472	22.940	0.275					-472			-472
-473	23.940	0.275					-473			-473
-474	24.940	0.275					-474			-474
-475	25.940	0.275					-475			-475

Chart 2B-1 SINGLE-TURN BACKUP RINGS FOR USE WITH GLAND O-RINGS IN MIL-H-5606 AND MIL-H-83282 HYDRAULIC FLUIDS

O-RING	LS4564				LS4565				MS28774			
STANDARDIZED DASH NO.	DASH NO.	ID	T	W	DASH NO.	ID	T	W	DASH NO.	ID	T	W
-001 through -003	No corresponding backup rings.											
-004									-004	0.109	0.049	0.053
-005									-005	0.124	0.049	0.053
-006					-1 or -006	0.125	0.054	0.055	-006	0.140	0.049	0.053
-007					-2 or -007	0.156	0.054	0.055	-007	0.171	0.049	0.053
-008					-3 or -008	0.188	0.054	0.055	-008	0.202	0.049	0.053
-009					-4 or -009	0.219	0.054	0.055	-009	0.234	0.049	0.053
-010					-5 or -010	0.250	0.054	0.055	-010	0.265	0.049	0.053
-011					-6 or -011	0.312	0.054	0.055	-011	0.327	0.049	0.053
-012					-7 or -012	0.375	0.054	0.055	-012	0.390	0.049	0.053
-013									-013	0.455	0.049	0.053
-014									-014	0.518	0.049	0.053
-015									-015	0.580	0.049	0.053
-016									-016	0.643	0.049	0.053
-017									-017	0.705	0.049	0.053
-018									-018	0.768	0.049	0.053
-019									-019	0.830	0.049	0.053
-020									-020	0.898	0.049	0.053
-021									-021	0.960	0.049	0.053
-022									-022	1.023	0.049	0.053
-023									-023	1.085	0.049	0.053
-024									-024	1.148	0.049	0.053
-025									-025	1.210	0.049	0.053
-026									-026	1.273	0.049	0.053
-027									-027	1.335	0.049	0.053
-028									-028	1.398	0.049	0.053
-029 through -109	No corresponding backup rings.											
-110					-8 or -110	0.375	0.054	0.088	-110	0.390	0.049	0.086
-111					-9 or -111	0.437	0.054	0.088	-111	0.452	0.049	0.086
-112					-10 or -112	0.500	0.054	0.088	-112	0.515	0.049	0.086
-113					-11 or -113	0.562	0.054	0.088	-113	0.577	0.049	0.086
-114					-12 or -114	0.625	0.054	0.088	-114	0.640	0.049	0.086
-115					-13 or -115	0.688	0.054	0.088	-115	0.702	0.049	0.086
-116					-14 or -116	0.750	0.054	0.088	-116	0.765	0.049	0.086
-117									-117	0.832	0.049	0.086
-118									-118	0.895	0.049	0.086
-119									-119	0.957	0.049	0.086
-120									-120	1.020	0.049	0.086
-121									-121	1.082	0.049	0.086
-122									-122	1.145	0.049	0.086
-123									-123	1.207	0.049	0.086
-124									-124	1.270	0.049	0.086
-125									-125	1.332	0.049	0.086
-126									-126	1.397	0.049	0.086
-127									-127	1.459	0.049	0.086
-128									-128	1.522	0.049	0.086
-129									-129	1.584	0.049	0.086
-130									-130	1.647	0.049	0.086
-131									-131	1.709	0.049	0.086
-132									-132	1.772	0.049	0.086
-133									-133	1.834	0.049	0.086
-134									-134	1.897	0.049	0.086
-135									-135	1.959	0.049	0.086
-136									-136	2.022	0.049	0.086
-137									-137	2.084	0.049	0.086
-138									-138	2.147	0.049	0.086
-139									-139	2.209	0.049	0.086
-140 through -209	No corresponding backup rings.											
-210					-15 or -210	0.750	0.054	0.121	-210	0.766	0.049	0.119
-211					-16 or -211	0.812	0.054	0.121	-211	0.828	0.049	0.119
-212					-17 or -212	0.875	0.054	0.121	-212	0.891	0.049	0.119
-213					-18 or -213	0.937	0.054	0.121	-213	0.953	0.049	0.119

Chart 2B-1 SINGLE-TURN BACKUP RINGS FOR USE WITH GLAND O-RINGS IN MIL-H-5606 AND MIL-H-83282 HYDRAULIC FLUIDS (CONTD)

O-RING STANDARDIZED DASH NO.	LS4564				LS4565				MS28774			
	DASH NO.	ID	T	W	DASH NO.	ID	T	W	DASH NO.	ID	T	W
-214					-19 or -214	1.000	0.054	0.121	-214	1.016	0.049	0.119
-215					-20 or -215	1.062	0.054	0.121	-215	1.078	0.049	0.119
-216					-21 or -216	1.125	0.054	0.121	-216	1.141	0.049	0.119
-217					-22 or -217	1.187	0.054	0.121	-217	1.203	0.049	0.119
-218					-23 or -218	1.250	0.054	0.121	-218	1.266	0.049	0.119
-219					-24 or -219	1.312	0.054	0.121	-219	1.334	0.049	0.119
-220					-25 or -220	1.375	0.054	0.121	-220	1.397	0.049	0.119
-221					-26 or -221	1.437	0.054	0.121	-221	1.459	0.049	0.119
-222					-27 or -222	1.500	0.054	0.121	-222	1.522	0.049	0.119
-223	-1	1.625	0.054	0.121	-223	1.625	0.054	0.121	-223	1.647	0.049	0.119
-224	-2	1.750	0.054	0.121	-224	1.750	0.054	0.121	-224	1.772	0.049	0.119
-225	-3	1.875	0.054	0.121	-225	1.875	0.054	0.121	-225	1.897	0.049	0.119
-226	-4	2.000	0.054	0.121	-226	2.000	0.054	0.121	-226	2.022	0.049	0.119
-227	-5	2.125	0.054	0.121	-227	2.125	0.054	0.121	-227	2.147	0.019	0.119
-228	-6	2.250	0.054	0.121	-228	2.250	0.054	0.121	-228	2.272	0.049	0.119
-229	-7	2.375	0.054	0.121	-229	2.375	0.054	0.121	-229	2.397	0.049	0.119
-230	-8	2.500	0.054	0.121	-230	2.500	0.054	0.121	-230	2.522	0.049	0.119
-231	-9	2.625	0.054	0.121	-231	2.625	0.054	0.121				
-232	-10	2.750	0.054	0.121	-232	2.750	0.054	0.121				
-233	-11	2.875	0.054	0.121	-233	2.875	0.054	0.121				
-234	-12	3.000	0.054	0.121	-234	3.000	0.054	0.121				
-235	-13	3.125	0.054	0.121	-235	3.125	0.054	0.121				
-236	-14	3.250	0.054	0.121	-236	3.250	0.054	0.121				
-237	-15	3.375	0.054	0.121	-237	3.375	0.054	0.121				
-238	-16	3 .500	0.054	0.121	-238	3 500	0.054	0.121				
-239	-17	3 .625	0.054	0.121	-239	3 625	0.054	0.121				
-240	-18	3.750	0.054	0.121	-240	3.750	0.054	0.121				
-241	-19	3.875	0.054	0.121	-241	3.875	0.054	0.121				
-242	-20	4.000	0.054	0.121	-242	4.000	0.054	0.121				
-243	-21	4.125	0.054	0.121	-243	4.125	0.054	0.121				
-244	-22	4.250	0.054	0.121	-244	4.250	0.054	0.121				
-245	-23	4.375	0.054	0.121	-245	4.375	0.054	0.121				
-246	-24	4.500	0.054	0.121	-246	4.500	0.054	0.121				
-247	-25	4.625	0.054	0.121	-247	4.625	0.054	0.121				
-248 through -324	No corresponding backup rings.											
-325					-28 or -325	1.500	0.067	0.185	-325	1.513	0.070	0.183
-326					-29 or -326	1.625	0.067	0.185	-326	1.636	0.070	0.183
-327					-30 or -327	1.750	0.067	0.185	-327	1.763	0.070	0.183
-328					-31 or -328	1.875	0.067	0.185	-328	1.888	0.070	0.183
-329					-32 or -329	2.000	0.067	0.185	-329	2.013	0.070	0.183
-330					-33 or -330	2.125	0.067	0.185	-330	2.138	0.070	0.183
-331					-34 or -331	2.250	0.067	0.185	-331	2.268	0.070	0.183
-332					-35 or -332	2.375	0.067	0.185	-332	2.393	0.070	0.183
-333					-36 or -333	2.500	0.067	0.185	-333	2.518	0.070	0.183
-334					-37 or -334	2.625	0.067	0.185	-331	2.643	0.070	0.183
-335					-38 or -335	2.750	0.067	0.185	.335	2.768	0.070	0.183
-336					-39 or -336	2.875	0.067	0.185	-336	2.893	0.070	0.183
-337					-40 or -337	3.000	0.067	0.185	-337	3.018	0.070	0.183
-338					-41 or -338	3.125	0.067	0.185	-338	3.143	0.070	0.183
-339					-42 or -339	3.250	0.067	0.185	-339	3.273	0.070	0.183
-340					-43 or -340	3.375	0.067	0.185	-340	3.398	0.070	0.183
-341					-44 or -341	3.500	0.067	0.185	-341	3.523	0.070	0.183
-342					-45 or -342	3.625	0.067	0.185	-342	3.648	0.070	0.183
-343					-46 or -343	3.750	0.067	0.185	-343	3.773	0.070	0.183
-344					-47 or -344	3.875	0.067	0.185	-344	3.898	0.070	0.183
-345					-48 or -345	4.000	0.067	0.185	-345	4.028	0.070	0.183
-346					-49 or -346	4.125	0.067	0.185	-346	4.153	0.070	0.183
-347					-50 or -347	4.250	0.067	0.185	-347	4.278	0.070	0.183
-348					-51 or -348	4.375	0.067	0.185	-348	4.403	0.070	0.183
-349					-52 or -349	4.500	0.067	0.185	-349	4.528	0.070	0.183
-350 through 424	No corresponding backup rings.											
-425					-88 or -425	4.500	0.098	0.238	-425	4.551	0.105	0.237

Chart 2B-1 SINGLE-TURN BACKUP RINGS FOR USE WITH GLAND O-RINGS IN MIL-H-5606 AND MIL-H-83282 HYDRAULIC FLUIDS (CONTD)

O-RING	LS4564				LS4565				MS28774			
STANDARDIZED DASH NO.	DASH NO.	ID	T	W	DASH NO.	ID	T	W	DASH NO.	ID	T	W
-426					-53 or -426	4.625	0.098	0.238	-426	4.676	0.105	0.237
-427					-54 or -427	4.750	0.098	0.238	-427	4.801	0.105	0.237
-428					-55 or -428	4.875	0.098	0.238	-428	4.926	0.105	0.237
-429					-56 or -429	5.000	0.098	0.238	-429	5.051	0.105	0.237
-430					-57 or -430	5.125	0.098	0.238	-430	5.176	0.105	0.237
-431					-58 or -431	5.250	0.098	0.238	-431	5.301	0.105	0.237
-432					-59 or -432	5.375	0.098	0.238	-432	5.426	0.105	0.237
-433					-60 or -433	5.500	0.098	0.238	-433	5.551	0.105	0.237
-434					-61 or -434	5.625	0.098	0.238	-434	5.676	0.105	0.237
-435					-62 or -435	5.750	0.098	0.238	-435	5.801	0.105	0.237
-436					-63 or -436	5.875	0.098	0.238	-436	5.926	0.105	0.237
-437					-64 or -437	6.000	0.098	0.238	-437	6.051	0.105	0.237
-438					-65 or -438	6.250	0.098	0.238				
-439					-66 or -439	6.500	0.098	0.238				
-440					-67 or -440	6.750	0.098	0.238				
-441					-68 or -441	7.000	0.098	0.238				
-442					-69 or 442	7.250	0.098	0.238				
-443					-70 or -443	7.500	0.098	0.238				
-444					-71 or -444	7.750	0.098	0.238				
-445					-72 or -445	8.000	0.098	0.238				
-446					-73 or -446	8.500	0.098	0.238				
-447					-74 or -447	9.000	0.098	0.238				
-448					-75 or -448	9.500	0.098	0.238				
-449					-76 or -449	10.000	0.098	0.238				
-450					-77 or -450	10.500	0.098	0.238				

Chart 2B-1 SINGLE-TURN BACKUP RINGS FOR USE WITH GLAND O-RINGS IN MIL-H-5606 AND MIL-H-83282 HYDRAULIC FLUIDS (CONTD)

O-RING STANDARDIZED DASH NO.	LS4564				LS4565				MS28774			
	DASH NO.	ID		W	DASH NO.	ID	T	W	DASH NO.	ID	T	W
-451					-78 or -451	11.000	0.098	0.238				
-452					-79 or -452	11.500	0.098	0.238				
-453					-80 or -453	12.000	0.098	0.238				
-454					-81 or -454	12.500	0.098	0.238				
-455					-82 or -455	13.000	0.098	0.238				
-456					-83 or -456	13.500	0.098	0.238				
-457					-84 or -457	14.000	0.098	0.238				
-458					-85 or -458	14.500	0.098	0.238				
-459					-86 or -459	15.000	0.098	0.238				
-460					-87 or -460	15.500	0.098	0.238				
-461 through -475	No corresponding backup rings.											

Chart 2B-2 DOUBLE-TURN BACKUP RINGS FOR USE GLAND O-RINGS IN MIL-H-5606 AND MIL-H-83282 HYDRAULIC FLUIDS

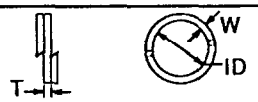

O-RING STANDARDIZED DASH NO.	MS28782				MS28783			
	DASH NO.	ID	T	W	DASH NO.	ID	T	W
-001 through -005	No corresponding backup rings.							
-006	-1	0.125	0.027	0.055				
-007	-2	0.156	0.027	0.055				
-008	-3	0.188	0.027	0.055				
-009	-4	0.219	0.027	0.055				
-010	-5	0.250	0.027	0.055				
-011	-6	0.312	0.027	0.055				
-012	-7	0.375	0.027	0.055				
-013 through -109	No corresponding backup rings.							
-110	-8	0.375	0.027	0.088				
-111	-9	0.438	0.027	0.088				
-112	-10	0.500	0.027	0.088				
-113	-11	0.562	0.027	0.088				
-114	-12	0.625	0.027	0.088				
-115	-13	0.688	0.027	0.088				
-116	-14	0.750	0.027	0.088				
-117 through -209	No corresponding backup rings.							
-210	-15	0.750	0.027	0.121				
-211	-16	0.812	0.027	0.121				
-212	-17	0.875	0.027	0.121				
-213	-18	0.938	0.027	0.121				
-214	-19	1.000	0.027	0.121				
-215	-20	1.062	0.027	0.121				
-216	-21	1.125	0.027	0.121				
-217	-22	1.188	0.027	0.121				
-218	-23	1.250	0.027	0.121				
-219	-24	1.312	0.027	0.121				
-220	-25	1.375	0.027	0.121				
-221	-26	1.438	0.027	0.121				
-222	-27	1.500	0.027	0.121				
-223					-1	1.625	0.027	0.120
-224					-2	1.750	0.027	0.120
-225					-3	1.875	0.027	0.120
-226					-4	2.000	0.027	0.120
-227					-5	2.125	0.027	0.120
-228					-6	2.250	0.027	0.120
-229					-7	2.375	0.027	0.120
-230					-8	2.500	0.027	0.120
-231					-9	2.625	0.027	0.120
-232					-10	2.750	0.027	0.120

Chart 2B-2 DOUBLE-TURN BACKUP RINGS FOR USE WITH GLAND O-RINGS IN MIL-H-5606 AND MIL-H-83282 HYDRAULIC FLUIDS (CONTD)

O-RING STANDARDIZED DASH NO.	MS28782 DASH NO.	MS28782 ID	MS28782 T	MS28782 W	MS28783 DASH NO.	MS28783 ID	MS28783 T	MS28783 W
-233					-11	2.875	0.027	0.120
-234					-12	3.000	0.027	0.120
-235					-13	3.125	0.027	0.120
-236					-14	3.250	0.027	0.120
-237					-15	3.375	0.027	0.120
-238					-16	3.500	0.027	0.120
-239					-17	3.625	0.027	0.120
-240					-18	3.750	0.027	0.120
-241					-19	3.875	0.027	0.120
-242					-20	4.000	0.027	0.120
-243					-21	4.125	0.027	0.120
-244					-22	4.250	0.027	0.120
-245					-23	4.375	0.027	0.120
-246					-24	4.500	0.027	0.120
-247					-25	4.625	0.027	0.120
-248 through -324	No corresponding backup rings.							
-325	-28	1.500	0.034	0.185				
-326	-29	1.625	0.034	0.185				
-327	-30	1.750	0.034	0.185				
-328	-31	1.875	0.034	0.185				
-329	-32	2.000	0.034	0.185				
-330	-33	2.125	0.034	0.185				
-331	-34	2.250	0.034	0.185				
-332	-35	2.375	0.034	0.185				
-333	-36	2.500	0.034	0.185				
-334	-37	2.625	0.034	0.185				
-335	-38	2.750	0.034	0.185				
-336	-39	2.875	0.034	0.185				
-337	-40	3.000	0.034	0.185				
-338	-41	3.125	0.034	0.185				
-339	-42	3.250	0.034	0.185				
-340	-43	3 .375	0.034	0.185				
-341	-44	3.500	0.031	0.185				
-342	-45	3.625	0.034	0.185				
-343	-46	3.750	0.034	0.185				
-344	-47	3.875	0.034	0.185				
-345	-48	4.000	0.034	0.185				
-346	-49	4.125	0.034	0.185				
-347	-50	4.250	0.034	0.185				
-348	-51	4.375	0.034	0.185				
-349	-52	4.500	0.034	0.185				
-350 through 424	No corresponding backup rings.							
-425	-88	4.500	0.049	0.238				
-426	-53	4.625	0.049	0.238				
-427	-54	4.750	0.049	0.238				
-428	-55	4.875	0.049	0.238				
-429	-56	5.000	0.049	0.238				
-430	-57	5.125	0.049	0.238				
-431	-58	5.250	0.049	0.238				
-432	-59	5.375	0.049	0.238				
-433	-60	5.500	0.049	0.238				
-434	-61	5.625	0.049	0.238				
-435	-62	5.750	0.049	0.238				
-436	-63	5.875	0.049	0.238				
-437	-64	6.000	0.049	0.238				
-438	-65	6.250	0.049	0.238				
-439	-66	6.500	0.049	0.238				
-440	-67	6.750	0.049	0.238				
-441	-68	7.000	0.049	0.238				
-442	-69	7.250	0.049	0.238				
-443	-70	7.500	0.049	0.238				

Chart 2B-2 DOUBLE-TURN BACKUP RINGS FOR USE WITH GLAND O-RINGS IN MIL-H-5606 AND MIL-H-83282 HYDRAULIC FLUIDS (CONTD)

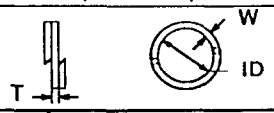

O-RING	MS28782				MS28783			
STANDARDIZED DASH NO.	DASH NO.	ID	T	W	DASH NO.	ID	T	W
-444	-71	7.750	0.049	0.238				
-445	-72	8.000	0.049	0.238				
-446	-73	8.500	0.049	0.238				
-447	-74	9.000	0.049	0.238				
-448	-75	9.500	0.049	0.238				
-449	-76	10.000	0.049	0.238				
-450	-77	10.500	0.049	0.238				
-451	-78	11.000	0.049	0.238				
-452	-79	11.500	0.049	0.238				
-453	-80	12.000	0.049	0.238				
-454	-81	12.500	0.049	0.238				
-455	-82	13.000	0.049	0.238				
-456	-83	13.500	0.049	0.238				
-457	-84	14.000	0.049	0.238				
-458	-85	14.500	0.049	0.238				
-459	-86	15.000	0.049	0.238				
-460	-87	15.500	0.049	0.238				
-461 through -475	No corresponding backup rings							

Chart 2C BOSS O-RINGS FOR USE IN MIL-H-5606 AND MIL-H-83282 HYDRAULIC FLUIDS

AS 568A STANDARDIZED DASH NO.	NOMINAL DIMENSIONS TUBE OD	ID	W	AN6290	MS28778	LS634	STSPK300	3( )N168-80	3 ( )N756-76	3 ( )PSI-30-5
-901	3/32	0.185	0.056					-901	-901	-901
-902	1/8	0.239	0.064	-2	-2	-2	-02	-902	-902	-902
-903	3/16	0.301	0.064	-3	-3	-3	-03	-903	-903	-903
-904	1/4	0.351	0.072	-4	-4	-4	-04	-904	-904	-904
-905	5/16	0.414	0.072	-5	-5	-5	-05	-905	-905	-905
-906	3/8	0.468	0.078	-6	-6	-6	-06	-906	-906	-906
-907	7/16	0.530	0.082					-907	-907	-907
-908	1/2	0.644	0.087	-8	-8	-8	-08	-908	-908	-908
-909	9/16	0.706	0.097					-909	-909	-909
-910	5/8	0.755	0.097	-10	-10	-10	-10	-910	-910	-910
-911	11/16	0.863	0.116					-911	-911	-911
-912	3/4	0.924	0.116	-12	-12	-12		-912	-912	-912
-913	13/16	0.986	0.116					-913	-913	-913
-914	7/8	1.047	0.116		-14			-914	-914	-914
-916	1	1.171	0.116	-16	-16	-16	-16	-916	-916	-916
-918	1-1/8	1.355	0.116					-918	-918	-918
-920	1-1/4	1.475	0.118	-20	-20	-20	-20	-920	-920	-920
-924	1-1/2	1.720	0.118	-24	-24	-24	-24	-924	-924	-924
-928	1-3/4	2.090	0.118	28	-28	-28	-28	-928	-928	-928
-932	2	2.337	0.118	-32	-32	-32	-32	-932	-932	-932

AS 568A STANDARDIZED DASH NO.	NOMINAL DIMENSIONS TUBE OD	ID	W	NAS1595	NAS1596	M83248/2
-901	3/32	0.185	0.056			-901
-902	1/8	0.239	0.064	-2	-2	-902
-903	3/16	0.301	0.064	-3	-3	-903
-904	1/4	0.351	0.072	-4	-4	-904
-905	5/16	0.414	0.072	-5	-5	-905
-906	3/8	0.468	0.078	-6	-6	-906
-907	7/16	0.530	0.082			-907
-908	1/2	0.644	0.087	-8	-8	-908
-909	9/16	0.706	0.097			-909
-910	5/8	0.755	0.097	-10	-10	-910
-911	11/16	0.863	0.116			-911
-912	3/4	0.924	0.116	-12	-12	-912
-913	13/16	0.986	0.116			-913
-914	7/8	1.047	0.116			-914
-916	1	1.171	0.116	-16	16	-916
-918	1-1/8	1.355	0.116			-918
-920	1 1/4	1.475	0.118	-20	-20	-920
-924	1-1/2	1.720	0.118	-24	-24	-924
-928	1-3/4	2.090	0.118	-28	-28	-928
-932	2	2.337	0.118	-32	-32	-932

Chart 2D BACKUP RINGS FOR USE WITH BOSS O-RINGS IN MIL-H-5606 AND MIL-H-83282 HYDRAULIC FLUIDS

O-RING STANDARDIZED DASH NO.	NOMINAL TUBE OD	LS4764 DASH NO.	ID	T	W	MS9058 DASH NO.	ID	T	W	MS28773 DASH NO.	ID	T	W
-901	3/32	No corresponding backup rings.											
-902	1/8					-02	0.246	0.056	0.112	-02	0.246	0.056	0.112
-903	3/16	-3	0.308	0.045	0.116	-03	0.309	0.056	0.112	-03	0.309	0.056	0.112
-904	1/4	-4	0.360	0.051	0.117	-04	0.360	0.061	0.117	-04	0.360	0.061	0.117
-905	5/16	-5	0.423	0.051	0.117	-05	0.423	0.061	0.117	-05	0.423	0.061	0.117
-906	3/8	-6	0.478	0.051	0.121	-06	0.478	0.061	0.121	-06	0.478	0.061	0.121
-907	7/16					-07	0.549	0.061	0.121				
-908	1/2	-8	0.656	0.051	0.125	-08	0.616	0.061	0.125	-08	0.656	0.061	0.125
-909	9/16					-09	0.718	0.061	0.125				
-910	5/8	-10	0.769	0.063	0.131	-10	0.769	0.073	0.131	-10	0.769	0.073	0.131
-911	11/16					-11	0.878	0.073	0.159				
-912	3/4	-12	0.941	0.063	0.170	-12	0.941	0.073	0.169	-12	0.941	0.073	0.169
-913	13/16	No corresponding backup rings.											
-914	7/8					-14	1.066	0.073	0.169				
-916	1	-16	1.191	0.063	0.168	-16	1.191	0.073	0.169	-16	1.191	0.073	0.169
-918	1-1/8					-18	1.378	0.073	0.169				
-920	1-1/4	-20	1.503	0.063	0.169	-20	1.503	0.073	0.169	-20	1.503	0.073	0.169
-924	1-1/2	-24	1.752	0.063	0.169	-24	1.752	0.073	0.169	-24	1.752	0.073	0.169
-928	1-3/4	-28	2.127	0.063	0.169	-28	2.127	0.073	0.169	-28	2.127	0.073	0.169
-932	2	-32	2.377	0.063	0.169	-32	2.377	0.073	0.169	-32	2.377	0.073	0.169

Chart 3A GLAND O-RING FOR USE IN MIL-L-7808 AND MIL-L-23699 LUBRICATING OILS

AS 568A STANDARDIZED DASH NO.	NOMINAL DIMENSIONS ID	NOMINAL DIMENSIONS W	AN123856 to AN123934	LS5041	MS9241	MS29561	NAS1593	NAS1594	M83248/1	M25988/1
-001	0.029	0.040			-001				-001	-001
-002	0.042	0.050			-002				-002	-002
-003	0.056	0.060			-003				-003	-003
-004	0.070	0.070			-004	-004	-004	-004	-004	-004
-005	0.101	0.070			-005	-005	-005	-005	-005	-005
-006	0.114	0.070	AN123856		-006	-006	-006	-006	-006	-006
-007	0.145	0.070	AN123857		-007	-007	-007	-007	-007	-007
-008	0.176	0.070	AN123858	-31	-008	-008	-008	-008	-008	-008
-009	0.208	0.070	AN123859	-29	-009	-009	-009	-009	-009	-009
-010	0.239	0.070	AN123860	-36	-010	-010	-010	-010	-010	-010
-011	0.301	0.070	AN123861		-011	-011	-011	-011	-011	-011
-012	0.364	0.070	AN123862		-012	-012	-012	-012	-012	-012
-013	0.426	0.070		-32	-013	-013	-013	-013	-013	-013
-014	0.489	0.070			-014	-014	-014	-014	-014	-014
-015	0.551	0.070			-015	-015	-015	-015	-015	-015
-016	0.614	0.070			-016	-016	-016	-016	-016	-016
-017	0.676	0.070			-017	-017	-017	-017	-017	-017
-018	0.739	0.070			-018	-018	-018	-018	-018	-018
-019	0.801	0.070			-019	-019	-019	-019	-019	-019
-020	0.864	0.070			-020	-020	-020	-020	-020	-020
-021	0.926	0.070			-021	-021	-021	-021	-021	-021
-022	0.989	0.070			-022	-022	-022	-022	-022	-022
-023	1.051	0.070			-023	-023	-023	-023	-023	-023
-024	1.114	0.070			-024	-024	-024	-024	-024	-024
-025	1.176	0.070			-025	-025	-025	-025	-025	-025
-026	1.239	0.070			-026	-026	-026	-026	-026	-026
-027	1.301	0.070			-027	-027	-027	-027	-027	-027
-028	1.364	0.070			-028	-028	-028	-028	-028	-028
-029	1.489	0.070			-029		-029	-029	-029	-029
-030	1.614	0.070			-030		-030	-030	-030	-030
-031	1.739	0.070			-031		-031	-031	-031	-031
-032	1.864	0.070			-032		-032	-032	-032	-032
-033	1.989	0.070			-033		-033	-033	-033	-033
-034	2.114	0.070			-034		-034	-034	-034	-034
-035	2.239	o 070			-035		-035	-035	-035	-035
-036	2.364	0.070			-036		-036	-036	-036	-036
-037	2.489	0.070			-037		-037	-037	-037	-037
-038	2.614	0.070			-038		-038	-038	-038	-038
-039	2.739	0.070			-039		-039	-039	-039	-039
-040	2.864	0.070			-040		-040	-040	-040	-040
-041	2.989	0.070			-041		-041	-041	-041	-041
-042	3.239	0.070			-042		-042	-042	-042	-042
-043	3.489	0.070			-043		-043	-043	-043	-043
-044	3.739	0,070			-044		-044	-044	-044	-044
-045	3.989	0.070			-045		-045	-045	-045	-045
-046	4.239	0.070			-046		-046	-046	-046	-046
-047	4.489	0.070			-047		-047	-047	-047	-047
-048	4.739	0.070			-048		-048	-048	-048	-048
-049	4.989	0.070			-049		-049	-049	-049	-049
-050	5.239	0.070			-050		-050	-050	-050	-050
-051 through -101	O-ring sizes not assigned.									
-102	0.049	0.103			-102				-102	-102
-103	0.081	0.103			-103				-103	-103
-104	0.112	0.103			-104				-104	-104
-105	0.143	0.103			-105				-105	-105
-106	0.174	0.103			-106				-106	-106
-107	0.206	0.103			-107				-107	-107
-108	0.237	0.103			-108				-108	-108
-109	0.299	0.103			-109				-109	-109
-110	0.362	0.103	AN123863		-110	-110	-110	-110	-110	-110
-111	0.424	0.103	AN123864		-111	-111	-111	-111	-111	-111
-112	0.487	0.103	AN123865	-37	-112	-112	-112	-112	-112	-112
-113	0.549	0.103	AN123866	-28	-113	-113	-113	-113	-113	-113
-114	0.612	0.103	AN123867		-114	-114	-114	-114	-114	-114
-115	0.674	0.103	AN123868	-41	-115	-115	-115	-115	-115	-115
-116	0.737	0.103	AN123869	-1	-116	-116	-116	-116	-116	-116
-117	0.799	0.103			-117	-117	-117	-117	-117	-117
-118	0.862	0.103			-118	-118	-118	-118	-118	-118
-119	0.924	0.103			-119	-119	-119	-119	-119	-119
-120	0.987	0.103			-120	-120	-120	-120	-120	-120
-121	1.049	0.103			-121	-121	-121	-121	-121	-121

Chart 3A GLAND O-RINGS FOR USE IN MIL-L-7808 AND MIL-L-23699 LUBRICATING OILS (CONTD)

AS 568A STANDARDIZED DASH NO.	NOMINAL DIMENSIONS ID	NOMINAL DIMENSIONS W	AN123856 to AN123934	LS5041	MS9241	MS29561	NAS1593	NAS1594	M83248/1	M25988/1
-122	1.112	0.103		-30	-122	-122	-122	-122	-122	-122
-123	1.174	0.103			-123	-123	-123	-123	-123	-123
-124	[illegible]	0.103			-124	-124	-124	-124	-124	-124
-125	[illegible]	0.103			-125	-125	-125	-125	-125	-125
-126	[illegible]	0.105			-126	-126	-126	-126	-126	-126
-127	1.424	0.103			-127	-127	-127	-127	-127	-127
-128	1.487	0.103			-128	-128	-128	-128	-128	-128
-129	1.549	0.103		-39	-129	-129	-129	-129	-129	-129
-130	1.612	0.103			-130	-130	-130	-130	-130	-130
-131	1.674	0.103			-131	-131	-131	-131	-131	-131
-132	1.737	0.103			-132	-132	-132	-132	-132	-132
-133	1.799	0.103			-133	-133	-133	-133	-133	-133
-134	1.862	0.103			-134	-134	-134	-134	-134	-134
-135	1.925	0.103			-135	-135	-135	-135	-135	-135
-136	1.987	0.103			-136	-136	-136	-136	-136	-136
-137	2.050	0.103			-137	-137	-137	-137	-137	-137
-138	2.112	0.103		-2	-138	-138	-138	-138	-138	-138
-139	2.175	0.103			-139	-139	-139	-139	-139	-139
-140	2.237	0.103			-140	-140	-140	-140	-140	-140
-141	2.300	0.103			-141	-141	-141	-141	-141	-141
-142	2.362	0.103			-142	-142	-142	-142	-142	-142
-143	2.425	0.103		-3	-143	-143	-143	-143	-143	-143
-144	2.487	0.103			-144	-144	-144	-144	-144	-144
-145	2.550	0.103			-145	-145	-145	-145	-145	-145
-146	2.612	0.103			-146	-146	-146	-146	-146	-146
-147	2.675	0.103			-147	-147	-147	-147	-147	-147
-148	2.737	0.103			-148	-148	-148	-148	-148	-148
-149	2.800	0.103			-149	-149	-149	-149	-149	-149
-150	2.862	0.103			-150		-150	-150	-150	-150
-151	2.987	0.103			-151		-151	-151	-151	-151
-152	3.237	0.103			-152		-152	-152	-152	-152
-153	3.487	0.103			-153		-153	-153	-153	-153
-154	3.737	0.103			-154		-154	-154	-154	-154
-155	3.987	0.103			-155		-155	-155	-155	-155
-156	4.237	0.103			-156		-156	-156	-156	-156
-157	4.487	0.103			-157		-157	-157	-157	-157
-158	4.737	0.103			-158		-158	-158	-158	-158
-159	4.987	0.103			-159		-159	-159	-159	-159
-160	5.237	0.103			-160		-160	-160	-160	-160
-161	5.487	0.103			-161		-161	-161	-161	-161
-162	5.737	0.103			-162		-162	-162	-162	-162
-163	5.987	0.103			-163		-163	-163	-163	-163
-164	6.237	0.103			-164		-164	-164	-164	-164
-165	6.487	0.103			-165		-165	-165	-165	-165
-166	6.737	0.103			-166		-166	-166	-166	-166
-167	6.987	0.103			-167		-167	-167	-167	-167
-168	7.237	0.103			-168		-168	-168	-168	-168
-169	7.487	0.103			-169		-169	-169	-169	-169
-170	7.737	0.103			-170		-170	-170	-170	-170
-171	7.987	0.103			-171		-171	-171	-171	-171
-172	8.237	0.103			-172		-172	-172	-172	-172
-173	8.487	0.103			-173		-173	-173	-173	-173
-174	8.737	0.103			-174		-174	-174	-174	-174
-175	8.987	0.103			-175		-175	-175	-175	-175
-176	9.237	0.103			-176		-176	-176	-176	-176
-177	9.487	0.103			-177		-177	-177	-177	-177
-178	9.737	0.103			-178		-178	-178	-178	-178
-179 through -200	O-ring sizes not assigned.									
-201	0.171	0.139			-201				-201	-201
-202	0.234	0.139			-202				-202	-202
-203	0.296	0.139			-203				-203	-203
-204	0.359	0.139			-204				-204	-204
-205	0.421	0.139			-205				-205	-205
-206	0.484	0.139			-206				-206	-206
-207	0.546	0.139			-207				-207	-207
-208	0.609	0.139			-208				-208	-208
-209	0.671	0.139			-209				-209	-209
-210	0.734	0.139	AN123870		-210	-210	-210	-210	-210	-210
-211	0.796	0.139	AN123871		-211	-211	-211	-211	-211	-211
-212	0.859	0.139	AN123872		-212	-212	-212	-212	-212	-212

Chart 3A GLAND O-RINGS FOR USE IN MIL-L-7808 AND MIL-L-23699 LUBRICATING OILS (CONTD)

AS 568A STANDARDIZED DASH NO.	NOMINAL DIMENSIONS ID	NOMINAL DIMENSIONS W	AN123856 to AN123934	LS5041	MS9241	MS29561	NAS1593	NAS1594	M83248/1	M25988/1
-213	0.921	0.139	AN123873		-213	-213	-213	-213	-213	-213
-214	0.984	0.139	AN123874		-214	-214	-214	-214	-214	-214
-215	1.046	0.139	AN123875	-42	-215	-215	-215	-215	-215	-215
-216	1.109	0.139	AN123876		-216	-216	-216	-216	-216	-216
-217	1.171	0.139	AN123877	-34	-217	-217	-217	-217	-217	-217
-218	1.234	0.139	AN123878	-35	-218	-218	-218	-218	-218	-218
-219	1.296	0.139	AN123879		-219	-219	-219	-219	-219	-219
-220	1.359	0.139	AN123880		-220	-220	-220	-220	-220	-220
-221	1.421	0.139	AN123881		-221	-221	-221	-221	-221	-221
-222	1.484	0.139	AN123882		-222	-222	-222	-222	-222	-222
-223	1.609	0.139	AN123883	-9	-223	-223	-223	-223	-223	-223
-224	1.734	0.139	AN123884		-224	-224	-224	-224	-224	-224
-225	1.859	0.139	AN123885		-225	-225	-225	-225	-225	-225
-226	1.984	0.139	AN123886		-226	-226	-226	-226	-226	-226
-227	2.109	0.139	AN123887	-38	-227	-227	-227	-227	-227	-227
-228	2.234	0.139	AN123888	-10	-228	-228	-228	-228	-228	-228
-229	2.359	0.139	AN123889		-229	-229	-229	-229	-229	-229
-230	2.484	0.139	AN123890	-33	-230	-230	-230	-230	-230	-230
-231	2.609	0.139	AN123891	-26	-231	-231	-231	-231	-231	-231
-232	2.734	0.139	AN123892	-27	-232	-232	-232	-232	-232	-232
-233	2.859	0.139	AN123893		-233	-233	-233	-233	-233	-233
-234	2.984	0.139	AN123894		-234	-234	-234	-234	-234	-234
-235	3.109	0.139	AN123895		-235	-235	-235	-235	-235	-235
-236	3.234	0.139	AN123896		-236	-236	-236	-236	-236	-236
-237	3.359	0.139	AN123897		-237	-237	-237	-237	-237	-237
-238	3.484	0.139	AN123898		-238	-238	-238	-238	-238	-238
-239	3.609	0.139	AN123899		-239	-239	-239	-239	-239	-239
-240	3.734	0.139	AN123900		-240	-240	-240	-240	-240	-240
-241	3.859	0.139	AN123901		-241	-241	-241	-241	-241	-241
-242	3.984	0.139	AN123902		-242	-242	-242	-242	-242	-242
-243	4.109	0.139	AN123903		-243	-243	-243	-243	-243	-243
-244	4.234	0.139	AN123904	-20	-244	-244	-244	-244	-244	-244
-245	4.359	0.139	AN123905		-245	-245	-245	-245	-245	-245
-246	4.484	0.139	AN123906		-246	-246	-246	-246	-246	-246
-247	4.609	0-139	AN123907	-24	-247	-247	-247	-247	-247	-247
-248	4.734	0.139	AN123908		-248	-248	-248	-248	-248	-248
-249	4.859	0.139	AN123909		-249	-249	-249	-249	-249	-249
-250	4.984	0.139	AN123910		-250	-250	-250	-250	-250	-250
-251	5.109	0.139	AN123911		-251	-251	-251	-251	-251	-251
-252	5.234	0.139	AN123912		-252	-252	-252	-252	-252	-252
-253	5.359	0.139	AN123913	-11	-253	-253	-253	-253	-253	-253
-254	5.484	0.139	AN123914		-254	-254	-251	-254	-254	-254
-255	5.609	0.139	AN123915		-255	-255	-255	-255	-255	-255
-256	5.734	0.139	AN123916		-256	-256	-256	-256	-256	-256
-257	5.859	0.139	AN123917		-257	-257	-257	-257	-257	-257
-258	5.984	0.139	AN123918		-258	-258	-258	-258	-258	-258
-259	6.234	0.139	AN123919		-259	-259	-259	-259	-259	-259
-260	6.484	0.139	AN123920		-260	-260	-260	-260	-260	-260
-261	6.734	0.139	AN123921		-261	-261	-261	-261	-261	-261
-262	6.984	0.139	ANI23922	-25	-262	-262	-262	-262	-262	-262
-263	7.234	0.139	AN123923	-21	-263	-263	-263	-263	-263	-263
-264	7.484	0.139	AN123924		-264	-264	-264	-264	-264	-264
-265	7.734	0.139	AN123925		-265	-265	-265	-265	-265	-265
-266	7.984	0.139	AN123926		-266	-266	-266	-266	-266	-266
-267	8.234	0.139	AN123927		-267	-267	-267	-267	-267	-267
-268	8.484	0.139	AN123928		-268	-268	-268	-268	-268	-268
-269	8.734	0.139	AN123929		-269	-269	-269	-269	-269	-269
-270	8.984	0.139	AN123930		-270	-270	-270	-270	-270	-270
-271	9.234	0.139	AN123931		-271	-271	-271	-271	-271	-271
-272	9.484	0.139	AN123932		-272	-272	-272	-272	-272	-272
-273	9.734	0.139	AN123933		-273	-273	-273	-273	-273	-273
-274	9.984	0.139	AN123934		-274	-274	-274	-274	-274	-274
-275	10.484	0.139			-275		-275	-275	-275	-275
-276	10.984	0.139			-276		-276	-276	-276	-276
-277	11.484	0.139			-277		-277	-277	-277	-277
-278	11.984	0.139			-278		-278	-278	-278	-278
-279	12.984	0.139			-279		-279	-279	-279	-279
-280	13.984	0.139			-280		-280	-280	-280	-280
-281	14.984	0.139			-281		-281	-281	-281	-281
-282	15.955	0.139			-282				-282	-282

Chart 3A GLAND O-RINGS FOR USE IN MIL-L-7808 AND MIL-L-23699 LUBRICATING OILS (CONTD)

AS 568A STANDARDIZED DASH NO.	NOMINAL DIMENSIONS ID	NOMINAL DIMENSIONS W	AN123856 to AN123934	LS5041	MS9241	MS29561	NAS1593	NAS1594	M83248/1	M25988.1
-283	16.955	0.139			-283				-283	-283
-284	17.955	0.139			-284				-284	-284
-285 through -308	O-ring sizes not assigned.									
-309	0.412	0.210			-309				-309	-309
-310	0.475	0.210			-310				-310	-310
-311	0.537	0.210			-311				-311	-311
-312	0.600	0.210			-312				-312	-312
-313	0.662	0.210			-313				-313	-313
-314	0.725	0.210			-314				-314	-314
-315	0.787	0.210			-315				-315	-315
-316	0.850	0.210			-316				-316	-316
-317	0.912	0.210			-317				-317	-317
-318	0.975	0.210			-318				-318	-318
-319	1.037	0.210			-319				-319	-319
-320	1.100	0.210			-320				-320	-320
-321	1.162	0.210			-321				-321	-321
-322	1.225	0.210			-322				-322	-322
-323	1.289	0.210			-323				-323	-323
-324	1.350	0.210			-324				-324	-324
-325	1.475	0.210		-12	-325	-325	-325	-325	-325	-325
-326	1.600	0.210			-326	-326	-326	-326	-326	-326
-327	1.725	0.210			-327	-327	-327	-327	-327	-327
-328	1.850	0.210			-328	-328	-328	-328	-328	-328
-329	1.975	0.210		-18	-329	-329	-329	-329	-329	-329
-330	2.100	0.210			-330	-330	-330	-330	-330	-330
-331	2.225	0.210			-331	-331	-331	-331	-331	-331
-332	2.350	0.210			-332	-332	-332	-332	-332	-332
-333	2.475	0.210		-19	-333	-333	-333	-333	-333	-333
-334	2.600	0.210			-334	-334	-334	-334	-334	-334
-335	2.725	0.210			-335	-335	-335	-335	-335	-335
-336	2.850	0.210			-336	-336	-336	-336	-336	-336
-337	2.975	0.210			-337	-337	-337	-337	-337	-337
-338	3.100	0.210			-338	-338	-338	-338	-338	-338
-339	3.225	0.210			-339	-339	-339	-339	-339	-339
-340	3.350	0.210			-340	-340	-340	-340	-340	-340
-341	3.475	0.210			-341	-341	-341	-341	-341	-341
-342	3.600	0.210			-342	-342	-342	-342	-342	-342
-343	3.725	0.210			-343	-343	-343	-343	-343	-343
-344	3.850	0.210			-344	-344	-344	-344	-344	-344
-345	3.975	0.210			-345	-345	-345	-345	-345	-345
-346	4.100	0.210			-346	-346	-346	-346	-346	-346
-347	4.225	0.210			-347	-347	-347	-347	-347	-347
-348	4.350	0.210			-348	-348	-348	-348	-348	-348
-349	4.475	0.210			-349	-349	-349	-349	-349	-349
-350	4.600	0.210			-350				-350	-350
-351	4.725	0.210			-351				-351	-351
-352	4.850	0.210			-352				-352	-352
-353	4.975	0.210			-353				-353	-353
-354	5.100	0.210			-354				-354	-354
-355	5.225	0.210			-355				-355	-355
-356	5.350	0.210			-356				-356	-356
-357	5.475	0.210			-357				-357	-357
-358	5.600	0.210			-358				-358	-358
-359	5.725	0.210			-359				-359	-359
-360	5.850	0.210			-360				-360	-360
-361	5.975	0.210			-361				-361	-361
-362	6.225	0.210			-362				-362	-362
-363	6.475	0.210			-363				-363	-363
-364	6.725	0.210			-364				-364	-364
-365	6.975	0.210			-365				-365	-365
-366	7.225	0.210			-366				-366	-366
-367	7.475	0.210			-367				-367	-367
-368	7.725	0.210			-368				-368	-368
-369	7.975	0.210			-369				-369	-369
-370	8.225	0.210			-370				-370	-370
-371	8.475	0.210			-371				-371	-371
-372	8.725	0.210			-372				-372	-372
-373	8.975	0.210			-373				-373	-373
-374	9.225	0.210			-374				-374	-374
-375	9.475	0.210			-375				-375	-375
-376	9.725	0.210			-376				-376	-376

Chart 3A GLAND O-RINGS FOR USE IN MIL-L-7808 AND MIL-L-23699 LUBRICATING OILS (CONTD)

AS 568A STANDARDIZED DASH NO.	NOMINAL DIMENSION ID	NOMINAL DIMENSION W	AN123856 to AN123934	LS5041	MS9241	MS29561	NAS1593	NAS1594	M83248/1	M25988/1
-377	9.975	0.210			-377				-377	-377
-378	10.475	0.210			-378				-378	-378
-379	10.975	0.210			-379				-379	-379
-380	11.475	0.210			-380				-380	-380
-381	11.975	0.210			-381				-381	-381
-382	12.975	0 210			-382				-382	-382
-383	13.975	0.210			-383				-383	-383
-384	14.975	0.210			-384				-384	-384
-385	15.955	0.210			-385				-385	-385
-386	16.955	0.210			-386				-386	~386
-387	17.955	0.210			-387				-387	-387
-388	18.955	0.210			-388				-388	-388
-389	19.955	0.210			-389				-389	-389
-390	20.955	0.210			.390				-390	-390
-391	21.955	0.210			-391				-391	-391
-392	22.940	0.210			-392				-392	-392
-393	23.940	0.210			-393				-393	-393
-394	24.940	0.210			-394				-394	-394
-395	25.940	0.210			-395				-395	-395
-396 through 424	O-ring sizes not assigned.									
-425	4.475	0.275			-425	-425	-425	-425	-425	-425
-426	4.600	0.275			-426	-426	-426	-426	-426	-426
-427	4.725	0.275			-427	-427	-427	-427	-427	-427
-428	4.850	0.275			-428	-428	-428	-428	-428	-428
-429	4.975	0.275			-429	-429	-429	-429	-429	-429
-430	5.100	0.275			-430	-430	-430	-430	-430	-430
-431	5.225	0.275			-431	-431	-431	-431	-431	-431
-432	5.350	0.275			-432	-432	-432	-432	-432	-432
-433	5.475	0.275			-433	-433	-433	-433	-433	-433
-434	5.600	0.275			-434	-434	-434	-434	-434	-434
-435	5.725	0.275			-435	-435	-435	-435	-435	-435
-436	5.850	0.275			-436	-436	-436	-436	-436	-436
-437	5.975	0.275			-437	-437	-437	-437	-437	-437
-438	6.225	0.275			-438	-438	-438	-438	-438	-438
-439	6.475	0.275			-439	-439	-439	-439	-439	-439
-440	6.725	0.275		-14	-440	-440	-440	-440	-440	-440
-441	6.975	0.275			-441	-441	-441	-441	-441	-441
-442	7.225	0.275			-442	-442	-442	-442	-442	-442
-443	7.475	0.275			-443	-443	-443	-443	-443	-443
-444	7.725	0.275			-444	-444	-444	-444	-444	-444
-445	7.975	0.275			-445	-445	-445	-445	-445	-445
-446	8.475	0.275			-446	-446	-446	-446	-446	-446
-447	8.975	0.275		-23	-447	-447	-447	-447	-447	-447
-448	9.475	0.275			-448	-448	-448	-448	-448	-448
-449	9.975	0.275			-449	-449	-449	-449	-449	-449
-450	10.475	0.275			-450	-450	-450	-450	-450	-450
-451	10.975	0.275			-451	-451	-451	-451	-451	-451
-452	11.475	0.275			-452	-452	-452	-452	-452	-452
-453	11.975	0.275			-453	-453	-453	-453	-453	-453
-454	12.475	0.275			-454	-454	-454	-454	-454	-454
-455	12.975	0.275			-455	-455	-455	-455	-455	-455
-456	13.475	0.275			-456	-456	-456	-456	-456	-456
-457	13.975	0.275			-457	-457	-457	-457	-457	-457
-458	14.475	0.275			-458	-458	-458	-458	-458	-458
-459	14.975	0.275			-459	-459	-459	-459	-459	-459
-460	15.475	0.275			-460	-460	-460	-460	-460	-460
-461	15.955	0.275			-461				-461	-461
-462	16.455	0.275			-462				-462	-462
-463	16.955	0.275			-463				-463	-463
-464	17.455	0.275			-464				-464	-464
-465	17.955	0.275			-465				-465	-465
-466	18.455	0.275			-466				-466	-466
-467	18.955	0.275			-467				-467	-467
-468	19.455	0.275			-468				-468	-448
-469	19.955	0.275			-469				-469	-469
-470	20.955	0.275			-470				-470	-470
-471	21.955	0.275			-471				-471	-471
-472	22.940	0.275			-472				-472	-472
-473	23.940	0.275			-473				-473	-473
-474	24.940	0.275			-474				-474	-474
-475	25.940	0.275			-475				-475	-475

Chart 3B BOSS O-RINGS FOR USE IN MIL-L-7808 AND MIL-L-23699 LUBRICATING OILS

AS 568A STANDARDIZED DASH NO.	NOMINAL DIMENSION TUBE OD	ID	W	LS5041	MS9355	NAS617	NAS1595	NAS1596	M83248/2
-901	3/32	0.185	0.056		-01				-901
-902	1/8	0.239	0.064		-02	-2	-2	-2	-902
-903	3/16	0.301	0.064	-17	-03	-3	-3	-3	-903
-904	1/4	0.351	0.072	-4	-04	-4	-4	-4	-904
-905	5/16	0.414	0.072		-05	-5	-5	-5	-905
-906	3/8	0.468	0.078	-5	-06	-6	-6	-6	-906
-907	7/16	0.530	0.082		-07				-907
-908	1/2	0.644	0.087	-15	-08	-8	-8	-8	-908
-909	9/16	0.706	0.097		-09				-909
-910	5/8	0.755	0.097	-40	-10	-10	-10	-10	-910
-911	11/16	0.863	0.116		-11				-911
-912	3/4	0.924	0.116	-6	-12	-12	-12	-12	-912
-913	13/16	0.986	0.116		-13				-913
-914	7/8	1.047	0.116		-14				-914
-916	1	1.171	0.116	-7	-16	-16	-16	-16	-916
-918	1-1/8	1.355	0.116		-18				-918
-920	1-1/4	1.475	0.118	-13	-20	-20	-20	-20	-920
-924	1-1/2	1.720	0.118	-8	-24	-24	-24	-24	-921
-928	1-3/4	2.090	0.118		-28	-28	-28	-28	-928
-932	2	2.337	0.118		-32	-32	-32	-32	-932

Chart 4A GLAND O-RINGS FOR USE IN COMMON JET FUELS

AS 568A STANDARDIZED DASH NO.	NOMINAL DIMENSION ID	W	AN123856 to AN123934	MS9021	MS29513	NAS1593	NAS1594	M83248/1	M25988/1
-001	0.029	0.040		-001	-001			-001	-001
-002	0.042	0.050		-002	-002			-002	-002
-003	0.056	0.060		-003	-003			-003	-003
-004	0.070	0.070		-004	-004	-004	-004	-004	-004
-005	0.101	0.070		-005	-005	-005	-005	-005	-005
-006	0.114	0.070	AN123956	-006	-006	-006	-006	-006	-006
-007	0.145	0.070	AN123957	-007	-007	-007	-007	-007	-007
-008	0.176	0.070	AN123958	-008	-008	-008	-008	-008	-008
-009	0.208	0.070	AN123959	-009	-009	-009	-009	-009	-009
-010	0.239	0.070	AN123960	-010	-010	-010	-010	-010	-010
-011	0.301	0.070	AN123961	-011	-011	-011	-011	-011	-011
-012	0.364	0.070	AN123962	-012	-012	-012	-012	-012	-012
-013	0.426	0.070		-013	-013	-013	-013	-013	-013
-014	0.489	0.070		-014	-014	-014	-014	-014	-014
-015	0.551	0.070		-015	-015	-015	-015	-015	-015
-016	0.614	0.070		-016	-016	-016	-016	-016	-016
-017	0.676	0.070		-017	-017	-017	-017	-017	-017
-018	0.739	0.070		-018	-018	-018	-018	-018	-018
-019	0.801	0.070		-019	-019	-019	-019	-019	-019
-020	0.864	0.070		-020	-020	-020	-020	-020	-020
-021	0.926	0.070		-021	-021	-021	-021	-021	-021
-022	0.989	0.070		-022	-022	-022	-022	-022	-022
-023	1.051	0.070		-023	-023	-023	-023	-023	-023
-024	1.114	0.070		-024	-024	-024	-024	-024	-024
-025	1.176	0.070		-025	-025	-025	-025	-025	-023
-026	1.239	0.070		-026	-026	-026	-026	-026	-026
-027	1.301	0.070		-027	-027	-027	-027	-027	-027
-028	1.364	0.070		-028	-028	-028	-028	-028	-028
-029	1.489	0.070		-029	-029	-029	-029	-029	-029
-030	1.614	0.070		-030	-030	-030	-030	-030	-030
-031	1.739	0.070		-031	-031	-031	-031	-031	-031
-032	1.864	0.070		-032	-032	-032	-032	-032	-032
-033	1.989	0.070		-033	-033	-033	-033	-033	-033
-034	2.114	0.070		-034	-034	-034	-034	-034	-034
-035	2.239	0.070		-035	-035	-035	-035	-035	-035
-036	2.364	0.070		-036	-036	-036	-036	-036	-036
-037	2.489	0.070		-037	-037	-037	-037	-037	-037
-038	2.614	0.070		-038	-038	-038	-038	-038	-038
-039	2.739	0.070		-039	-039	-039	-039	-039	-039
-040	2.864	0.070		-040	-040	-040	-040	-040	-040
-041	2.989	0.070		-041	-041	-041	-041	-041	-041
-042	3.239	0.070		-042	-042	-042	-042	-042	-042

Chart 4A GLAND O-RINGS FOR USE IN COMMON JET FUELS (CONTD)

AS 568A STANDARDIZED DASH NO.	NOMINAL DIMENSION ID	NOMINAL DIMENSION W	AN123856 to AN123934	MS9021	MS29513	NAS1593	NAS1594	M83248/1	M25988/1
-043	3.489	0.070		-043	-043	-043	-043	-043	-043
-044	3.739	0.070		-044	-044	-044	-044	-044	-044
-045	3.989	0.070		-045	-045	-045	-045	-045	-045
-046	4.239	0.070		-046	-046	-046	-046	-046	-046
-047	4.489	0.070		-047	-047	-047	-047	-047	-047
-048	4.739	0.070		-048	-048	-048	-048	-048	-048
-049	4.989	0.070		-049	-049	-049	-049	-049	-049
-050	5.239	0.070		-050	-050	-050	-050	-050	-050
-051 through -101	O-ring sizes not assigned.								
-102	0.049	0.103						-102	-102
-103	0.081	0.103						-103	-103
-104	0.112	0.103						-104	-104
-105	0.143	0.103						-105	-105
-106	0.174	0.103		-106				-106	-106
-107	0.206	0.103		-107				-107	-107
-108	0.237	0.103		-108				-108	-108
-109	0.299	0.103		-109				-109	-109
-110	0.362	0.103	AN123963	-110	-110	-110	-110	-110	-110
-111	0.424	0.103	AN123964	-111	-111	-111	-111	-111	-111
-112	0.487	0.103	AN123965	-112	-112	-112	-112	-112	-112
-113	0.549	0.103	AN123966	-113	-113	-113	-113	-113	-113
-114	0.612	0.103	AN123967	-114	-114	-114	-114	-114	-114
-115	0.674	0.103	AN123968	-115	-115	-115	-115	-115	-115
-116	0.737	0.103	AN123969	-116	-116	-116	-116	-116	-116
-117	0.799	0.103		-117	-117	-117	-117	-117	-117
-118	0.862	0.103		-118	-118	-118	-118	-118	-118
-119	0.924	0.103		-119	-119	-119	-119	-119	-119
-120	0.987	0.103		-120	-120	-120	-120	-120	-120
-121	1.049	0.103		-121	-121	-121	-121	-121	-121
-122	1.112	0.103		-122	-122	-122	-122	-122	-122
-123	1.174	0.103		-123	-123	-123	-123	-123	-123
-124	1.237	0.103		-124	-124	-124	-124	-124	-124
-125	1.299	0.103		-125	-125	-125	-125	-125	-125
-126	1.362	0.103		-126	-126	-126	-126	-126	-126
-127	1.424	0.103		-127	-127	-127	-127	-127	-127
-128	1.487	0.103		-128	-128	-128	-128	-128	-128
-129	1.549	0.103		-129	-129	-129	-129	-129	-129
-130	1.612	0.103		-130	-130	-130	-130	-130	-130
-131	1.674	0.103		-131	-131	-131	-131	-131	-131
-132	1.737	0.103		-132	-132	-132	-132	-132	-132
-133	1.799	0.103		-133	-133	-133	-133	-133	-133
-134	1.862	0.103		-134	-134	-134	-134	-134	-134
-135	1.925	0.103		-135	-135	-135	-135	-135	-135
-136	1.987	0.103		-136	-136	-136	-136	-136	-136
-137	2.050	0.103		-137	-137	-137	-137	-137	-137
-138	2.112	0.103		-138	-138	-138	-138	-138	-138
-139	2.175	0.103		-139	-139	-139	-139	-139	-139
-140	2.237	0.103		-140	-140	-140	-140	-140	-140
-141	2.300	0.103		-141	-141	-141	-141	-141	-141
-142	2.362	0.103		-142	-142	-142	-142	-142	-142
-143	2.425	0.103		-143	-143	-143	-143	-143	-143
-144	2.487	0.103		-144	-144	-144	-144	-144	-144
-145	2.550	0.103		-145	-145	-145	-145	-145	-145
-146	2.612	0.103		-146	-146	-146	-146	-146	-146
-147	2.675	0.103		-147	-147	-147	-147	-147	-147
-148	2.737	0.103		-148	-148	-148	-148	-148	-148
-149	2.800	0.103		-149	-149	-149	-149	-149	-149
-150	2.862	0.103		-150	-150	-150	-150	-150	-150
-151	2.987	0.103		-151	-151	-151	-151	-151	-151
-152	3.237	0.103		-152	-152	-152	-152	-152	-152
-153	3.487	0.103		-153	-153	-153	-153	-153	-153
-154	3.737	0 103		-154	-154	-154	-154	-154	-154
-155	3.987	0.103		-155	-155	-155	-155	-155	-155
-156	4.237	0.103		-156	-156	-156	-156	-156	-156
-157	4.487	0.103		-157	-157	-157	-157	-157	-157
-158	4.737	0.103		-158	-158	-158	-158	-158	-158
-159	4.987	0.103		-159	-159	-159	-159	-159	-159
-160	5.237	0.103		-160	-160	-160	-160	-160	-160
-161	5.487	0.103		-161	-161	-161	-161	-161	-161
-162	5.737	0.103		-162	-162	-162	-162	-162	-162
-163	5.987	0.103		-163	-163	-163	-163	-163	-163
-164	6.237	0.103		-164	-164	-164	-164	-164	-164

Chart 4A GLAND O-RINGS FOR USE IN COMMON JET FUELS (CONTD)

AS 568A STANDARDIZED DASH NO.	NOMINAL DIMENSION ID	NOMINAL DIMENSION W	AN123856 to AN123934	MS9021	MS29513	NAS1593	NAS1594	M83248/1	M25988/1
-165	6.487	0.103		-165	-165	-165	-165	-165	-165
-166	6.737	0.103		-166	-166	-166	-166	-166	-166
-167	6.987	0.103		-167	-167	-167	-167	-167	-167
-168	7.237	0.103		-168	-168	-168	-168	-168	-168
-169	7.487	0.103		-169	-169	-169	-169	-169	-169
-170	7.737	0.103		-170	-170	-170	-170	-170	-170
-171	7.987	0.103		-171	-171	-171	-171	-171	-171
-172	8.237	0.103		-172	-172	-172	-172	-172	-172
-173	8.487	0.103		-173	-173	-173	-173	-173	-173
-174	8.737	0.103		-174	-174	-174	-174	-174	-174
-175	8.987	0.103		-175	-175	-175	-175	-175	-175
-176	9.237	0.103		-176	-176	-176	-176	-176	-176
-177	9.487	0.103		-177	-177	-177	-177	-177	-177
-178	9.737	0.103		-178	-178	-178	-178	-178	-178
-179 through -200	O-ring sizes not assigned.								
-201	0.171	0.139						-201	-201
-202	0.234	0.139						-202	-202
-203	0.296	0.139						-203	-203
-204	0.359	0.139						-204	-204
-205	0.421	0.139						-205	-205
-206	0.484	0.139						-206	-206
-207	0.546	0.139						-207	-207
-208	0.609	0.139						-208	-208
-209	0.671	0.139						-209	-209
-210	0.734	0.139	AN123970	-210	-210	-210	-210	-210	-210
-211	0.796	0.139	AN123971	-211	-211	-211	-211	-211	-211
-212	0.859	0.139	AN123972	-212	-212	-212	-212	-212	-212
-213	0.921	0.139	AN123973	-213	-213	-213	-213	-213	-213
-214	0.984	0.139	AN123974	-214	-214	-214	-214	-214	-214
-215	1.046	0.139	AN123975	-215	-215	-215	-215	-215	-215
-216	1.109	0.139	AN123976	-216	-216	-216	-216	-216	-216
-217	1.171	0.139	AN123977	-217	-217	-217	-217	-217	-217
-218	1.234	0.139	AN123978	-218	-218	-218	-218	-218	-218
-219	1.296	0.139	AN123979	-219	-219	-219	-219	-219	-219
-220	1.359	0.139	AN123980	-220	-220	-220	-220	-220	-220
-221	1.421	0.139	AN123981	-221	-221	-221	-221	-221	-221
-222	1.484	0.139	AN123982	-222	-222	-222	-222	-222	-222
-223	1.609	0.139	AN123983	-223	-223	-223	-223	-223	-223
-224	1.734	0.139	AN123984	-224	-224	-224	-224	-224	-224
-225	1.859	0.139	AN123985	-225	-225	-225	-225	-225	-225
-226	1.984	0.139	AN123986	-226	-226	-226	-226	-226	-226
-227	2.109	0.139	AN123987	-227	-227	-227	-227	-227	-227
-228	2.234	0.139	AN123988	-228	-228	-228	-228	-228	-228
-229	2.359	0.139	AN123989	-229	-229	-229	-229	-229	-229
-230	2.484	0.139	AN123990	-230	-230	-230	-230	-230	-230
-231	2.609	0.139	AN123991	-231	-231	-231	-231	-231	-231
-232	2.734	0.139	AN123992	-232	-232	-232	-232	-232	-232
-233	2.859	0.139	AN123993	-233	-233	-233	-233	-233	-233
-234	2.984	0.139	AN123994	-234	-234	-234	-234	-234	-234
-235	3.109	0.139	AN123995	-235	-235	-235	-235	-235	-235
-236	3.234	0.139	AN123996	-236	-236	-236	-236	-236	-236
-237	3.359	0.139	AN123997	-237	-237	-237	-237	-237	-237
-238	3.484	0.139	AN123998	-238	-238	-238	-238	-238	-238
-239	3.609	0.139	AN123999	-239	-239	-239	-239	-239	-239
-240	3.734	0.139	AN124000	-240	-240	-240	-240	-240	-240
-241	3.859	0.139	AN124001	-241	-241	-241	-241	-241	-241
-242	3.984	0.139	AN124002	-242	-242	-242	-242	-242	-242
-243	4.109	0.139	AN124003	-243	-243	-243	-243	-243	-243
-244	4.234	0.139	AN124004	-244	-244	-244	-244	-244	-244
-245	4.359	0.139	AN124005	-245	-245	-245	-245	-245	-245
-246	4.484	0.139	AN124006	-246	-246	-246	-246	-246	-246
-247	4.609	0.139	AN124007	-247	-247	-247	-247	-247	-247
-248	4.734	0.139	AN124008	-248	-248	-248	-248	-248	-248
-249	4.859	0.139	AN124009	-249	-249	-249	-249	-249	-249
-250	4.984	0.139	AN124010	-250	-250	-250	-250	-250	-250
-251	5.109	0.139	AN124011	-251	-251	-251	-251	-251	-251
-252	5.234	0.139	AN124012	-252	-252	-252	-252	-252	-252
-253	5.359	0.139	AN124013	-253	-253	-253	-253	-253	-253
-254	5.484	0.139	AN124014	-254	-254	-254	-254	-254	-254
-255	5.609	0.139	AN124015	-255	-255	-255	-255	-255	-255
-256	5.734	0.139	AN124016	-256	-256	-256	-256	-256	-256
-257	5.859	0.139	AN124017	-257	-257	-257	-257	-257	-257

Chart 4A GLAND O-RINGS FOR USE IN COMMON JET FUELS (CONTD)

AS 568A STANDARDIZED DASH NO.	NOMINAL DIMENSION ID	NOMINAL DIMENSION W	AN123856 to AN123934	MS9021	MS29513	NAS1593	NAS1594	M83248/1	M25988/1
-258	5.984	0.139	AN124018	-258	-258	-258	-258	-258	-258
-259	6.234	0.139	AN124019	-259	-259	-259	-259	-259	-259
-260	6.484	0.139	AN124020	-260	-260	-260	-260	-260	-260
-261	6.734	0.139	AN124021	-261	-261	-261	-261	-261	-261
-262	6.984	0.139	AN124022	-262	-262	-262	-262	-262	-262
-263	7.234	0.139	AN124023	-263	-263	-263	-263	-263	-263
-264	7.484	0.139	AN124024	-264	-264	-264	-264	-264	-264
-265	7.734	0.139	AN124025	-265	-265	-265	-265	-265	-265
-266	7.984	0.139	AN124026	-266	-266	-266	-266	-266	-266
-267	8.234	0.139	AN124027	-267	-267	-267	-267	-267	-267
-268	8.484	0.139	AN124028	-268	-268	-268	-268	-268	-268
-269	8.734	0.139	AN124029	-269	-269	-269	-269	-269	-269
-270	8.984	0.139	AN124030	-270	-270	-270	-270	-270	-270
-271	9.234	0.139	AN124031	-271	-271	-271	-271	-271	-271
-272	9.484	0.139	AN124032	-272	-272	-272	-272	-272	-272
-273	9.734	0.139	AN124033	-273	-273	-273	-273	-273	-273
-274	9.984	0.139	AN124034	-274	-274	-274	-271	-274	-274
-275	10.484	0.139		-275	-275	-275	-275	-275	-275
-276	10.984	0.139		-276	-276	-276	-276	-276	-276
-277	11.484	0.139		-277	-277	-277	-277	-277	-277
-278	11.984	0.139		-278	-278	-278	-278	-278	-278
-279	12.984	0.139		-279	-279	-279	-279	-279	-279
-280	13.984	0.139		-280	-280	-780	-280	-280	-280
-281	I 4.984	0.139		-281	-281	-281	-281	-281	-281
-282	15.955	0.139		-282	-282			-282	-282
-283	16.955	0.139		-283	-283			-283	-283
-284	17.955	0.139		-284	-284			-284	-284
-285 through -308	O-ring sizes not assigned.								
-309	0.412	0.210						-309	-309
-310	0.475	0.210						-310	-310
-311	0.537	0.210						-311	-311
-312	0.600	0.210						-312	-312
-313	0.662	0.210						-313	-313
-314	0.725	0.210						-314	-314
-315	0.787	0.210						-315	-315
-316	0.850	0.210						-316	-316
-317	0.912	0.210						-317	-317
-318	0.975	0.210						-318	-318
-319	1.037	0.210						-319	-319
-320	1.100	0.210						-320	-320
-321	1.162	0.210						-321	-321
-322	1.225	0.210						-322	-322
-323	1.289	0.210						-323	-323
-324	1.350	0.210						-324	-324
-325	1.475	0.210		-325	-325	-325	-325	-325	-325
-326	1.600	0.210		-326	-326	-326	-326	-326	-326
-327	1.725	0.210		-327	-327	-327	-327	-327	-327
-328	1.850	0.210		-328	-328	-328	-328	-328	-328
-329	1.975	0.210		-329	-329	-329	-329	-329	-329
-330	2.100	0.210		-330	-330	-330	-330	-330	-330
-331	2.225	0.210		-331	-331	-331	-331	-331	-331
-332	2.350	0.210		-332	-332	-332	-332	-332	-332
-333	2.475	0.210		-333	-333	-333	-333	-333	-333
-334	2.600	0.210		-334	-334	-334	-334	-334	-334
-335	2.725	0.210		-335	-335	-335	-335	-335	-335
-336	2.850	0.210		-336	-336	-336	-336	-336	-336
-337	2.975	0.210		-337	-337	-337	-337	-337	-337
-338	3.100	0.210		-338	-338	-338	-338	-338	-338
-339	3.225	0.210		-339	-339	-339	-339	-339	-339
-340	3.350	0.210		-340	-340	-340	-340	-340	-340
-341	3.475	0.210		-341	-341	-341	-341	-341	-341
-342	3.600	0.210		-342	-342	-342	-342	-342	-342
-343	3.725	0.210		-343	-343	-343	-343	-343	-343
-344	3.850	0.210		-344	-344	-344	-344	-344	-344
-345	3.975	0.210		-345	-345	-345	-345	-34S	-345
-346	4.100	0.210		-346	-346	-346	-346	-346	-346
-347	4.225	0.210		-347	-347	-347	-347	-347	-347
-348	4.350	0.210		-348	-348	-348	-348	-348	-348
-349	4.475	0.210		-349	-349	-349	-349	-349	-349
-350	4.600	0.210		-350	-350			-350	-350
-351	4.725	0.210		-351	-351			-351	-351
-352	4.850	0.210		-352	-352			-352	-352

Chart 4A GLAND O-RINGS FOR USE IN COMMON JET FUELS (CONTD)

AS 568A STANDARDIZED DASH NO.	NOMINAL DIMENSION ID	NOMINAL DIMENSION W	AN123856 to AN123934	MS9021	MS29513	NAS1593	NAS1594	M83248/1	M25988/1
-353	4.975	0.210		-353	-353			-353	-353
-354	5.100	0.210		-354	-354			-354	-354
-355	5.225	0.210		-355	-355			-355	-355
-356	5.350	0.210		-356	-356			-356	-35
-357	5.475	0.210		-357	-357			-357	-357
-358	5.600	0.210		-358	-358			-358	-358
-359	5.725	0.210		-359	-359			-359	-359
-360	5.850	0.210		-360	-360			-360	-360
-361	5.975	0.210		-361	-361			-361	-361
-362	6.225	0.210		-362	-362			-362	-362
-363	6.475	0.210		-363	-363			-363	-363
-364	6.725	0.210		-364	-364			-364	-364
-365	6.975	0.210		-365	-365			-365	-365
-366	7.225	0.210		-366	-366			-366	-366
-367	7.475	0.210		-367	-367			-367	-367
-368	7.725	0.210		-368	-368			-368	-368
-369	7.975	0.210		-369	-369			-369	-369
-370	8.225	0.210		-370	-370			-370	-370
-371	8.475	0.210		-371	-371			-371	-371
-372	8.725	0.210		-372	-372			-372	-372
-373	8.975	0.210		-373	-373			-373	-373
-374	9.225	0.210		-374	-374			-374	-374
-375	9.475	0.210		-375	-375			-375	-375
-376	9.725	0.210		-376	-376			-376	-376
-377	9.975	0.210		-377	-377			-377	-377
-378	10.475	0.210		-378	-378			-378	-378
-379	10.975	0.210		-379	-379			-379	-379
-380	11.475	0.210		-380	-380			-380	-380
-381	11.975	0.210		-381	-381			-381	-381
-382	12.975	0.210		-382	-382			-382	-382
-383	13.975	0.210		-383	-383			-383	-383
-384	14.975	0.210		-381	-384			-384	-384
-385	15.955	0.210		-385	-385			-385	-385
-386	16.955	0.210		-386	-386			-386	-386
-387	17.955	0.210		-387	-387			-387	-387
-388	18.955	0.210		-388	-388			-388	-388
-389	19.955	0.210		-389	-389			-389	-389
-390	20.955	0.210		.390	-390			-390	-390
-391	21.955	0.210		-391	-391			-391	-391
-392	22.940	0.210		-392	-392			-392	-392
-393	23.940	0.210		-393	-393			-393	-393
-394	24.940	0.210		-394	-391			-394	-394
-395	25.940	0.210		-395	-395			-395	-395
-396 through -424	O-ring sizes not assigned.								
-425	4.475	0.275		-425	-425	-425	-425	-425	-425
-426	4.600	0.275		-426	-426	-426	-426	-426	-426
-427	4.725	0.275		-427	-427	-427	-427	-427	-427
-428	4.850	0.275		-428	-428	-428	-428	-428	-428
-429	4.975	0.275		-429	-429	-429	-429	-429	-429
-430	5.100	0.275		-430	-430	-430	-430	-430	-430
-431	5.225	0.275		-431	-431	-431	-431	-431	-431
-432	5.350	0.275		-432	-432	-432	-432	-432	-432
-433	5.475	0.275		-433	-433	-433	-433	-433	-433
-434	5.600	0.275		-434	-434	-434	-434	-434	-434
-435	5.725	0.275		-435	-435	-435	-435	-435	-435
-436	5.850	0.275		-436	-436	-436	-436	-436	-436
-437	5.975	0.275		-437	-437	-437	-437	-437	-437
-438	6.225	0.275		-438	-438	-438	-438	-438	-438
-439	6.475	0.275		-439	-439	-439	-439	-439	-439
-440	6.725	0.275		-440	-440	-440	-440	-440	-440
-441	6.975	0.275		-441	-441	-441	-441	-441	-441
-442	7.225	0.275		-442	-442	-442	-442	-442	-442
-443	7.475	0.275		-443	-443	-443	-443	-443	-443
-444	7.725	0.275		-444	-444	-444	-444	-444	-444
-445	7.975	0.275		-445	-445	-445	-455	-445	-445
-446	8.475	0.275		-446	-446	-446	-446	-446	-446
-447	8.975	0.275		-447	-447	-447	-447	-447	-447
-448	9.475	0.275		-448	-448	-448	-448	-448	-448
-449	9.975	0.275		-449	-449	-449	-449	-449	-449
-450	10.475	0.275		-450	-450	-450	-450	-450	-450
-451	10.975	0.275		-451	-451	-451	-451	-451	-451
-452	11.475	0.275		-452	-452	-452	-452	-452	-452

Chart 4A GLAND O-RINGS FOR USE IN COMMON JET FUELS (CONTD)

AS 568A STANDARDIZED DASH NO.	NOMINAL DIMENSIONS ID	NOMINAL DIMENSIONS W	AN123856 to AN123934	MS9021	MS29513	NAS1593	NAS1594	M83248/1	M25988/1
-453	11.975	0.275		-453	-453	-453	-453	-453	-453
-454	12.475	0.275		-454	-454	-454	-454	-454	-454
-455	12.975	0.275		-455	-455	-455	-455	-455	-455
-456	13.475	0.275		-456	-456	-456	-456	-456	-456
-457	13.975	0.275		-457	-457	-457	-457	-457	-457
-458	14.475	0.275		-458	-458	-458	-458	-458	-458
-459	14.975	0.275		-459	-459	-459	-459	-459	-459
-460	15.475	0.275		-460	-460	-460	-460	-460	-460
-461	15.955	0.275		-461	-461			-461	-461
-462	16.455	0.275		-462	-462			-462	-462
-463	16.955	0.275		-463	-463			-463	-463
-464	17.455	0.275		-464	-464			-464	-464
-465	17.955	0.275		-465	-465			-465	-465
-466	18.455	0.275		-466	-466			-466	-466
-467	18.955	0.275		-467	-467			-467	-467
-468	19.455	0.275		-468	-468			-468	-468
-469	19.955	0.275		-469	-469			-469	-469
-470	20.955	0.275		-470	-470			-470	-470
-471	21.955	0.275		-471	-471			-471	-471
-472	22.940	0.275		-472	-472			-472	-472
-473	23.940	0.275		-473	-473			-473	-473
-474	24.940	0.275		-474	-474			-474	-474
-475	25.940	0.275		-475	-475			-475	-475

Chart 4B BOSS O-RINGS FOR USE IN COMMON JET FUELS

AS 568A STANDARDIZED DASH NO.	NOMINAL DIMENSIONS TUBE OD	NOMINAL DIMENSIONS ID	NOMINAL DIMENSIONS W	MS9020	MS29512	NAS1595	NAS1596	M83248/2
-901	3/32	0.185	0.056	-01	-01			-901
-902	1/8	0.239	0.064	-02	-02	-2	-2	-902
-903	3/16	0.301	0.064	-03	-03	-3	-3	-903
-904	1/4,	0.351	0.072	-04	-04	-4	-4	-904
-905	5/16	0.414	0.072	-05	-05	-5	-5	-905
-906	3/8	0.468	0.078	-06	-06	-6	-6	-906
-907	7/16	0.530	0.082	-07	-07			-907
-908	1/2	0.644	0.087	-08	-08	-8	-8	-908
-909	9/16	0.706	0.097	-09	-09			-909
-910	5/8	0.755	0.097	-10	-10	-10	-10	-910
-911	11/16	0.863	0.116	-11	-11			-911
-912	3/4	0.924	0.116	-12	-12	-12	-12	-912
-913	13/16	0.986	0.116	-13	-13			-913
-914	7/8	1.047	0.116	-14	-14			-914
-916	1	1.171	0.116	-16	-16	-16	-16	-916
-918	1-1/8	1.355	0.116	-18	-18			-918
-920	1-1/4	1.475	0.118	-20	-20	-20	-20	-920
-925	1-1/2	1.720	0.118	-24	-24	-24	-24	-924
-928	1-3/4	2.090	0.118	-28	-28	-28	-28	-928
-932	2	2.337	0.118	-32	-32	-32	-32	-932

Chart 5A GLAND O-RINGS FOR USE IN BREATHING OXYGEN

AS 568A STANDARDIZED DASH NO.	NOMINAL DIMENSIONS ID	W	MS9068		AS 568A STANDARDIZED DASH NO.	NOMINAL DIMENSIONS ID	W		MS9068
-001	0.029	0.040			-018	0.739	0.070		-018
-002	0.042	0.050			-019	0.801	0.070		-019
-003	0.056	0.060			-020	0.864	0.070		-020
-004	0.070	0.070	-004		-021	0.926	0.070		-021
-005	0.101	0.070	-005		-022	0.989	0.070		-022
-006	0.114	0.070	-006		-023	1.051	0.070		-023
-007	0.145	0.070	-007		-024	1.114	0.070		-024
-008	0.176	0.070	-008		-025	1.176	0.070		-025
-009	0.208	0.070	-009		-026	1.239	0.070		-026
-010	0.239	0.070	-010		-027	1.301	0.070		-027
-011	0.301	0.070	-011		-028	1.364	0.070		-028
-012	0.364	0.070	-012		-029	1.489	0.070		-029
-013	0.426	0.070	-013		-030	1.614	0.070		-030
-014	0.489	0.070	-014		-031	1.739	0.070		-031
-015	0.551	0.070	-015		-032	1.864	0.070		-032
-016	0.614	0.070	-016		-033	1.989	0.070		-033
-017	0.676	0.070	-017		-034	2.114	0.070		-034

Chart 5A GLAND O-RINGS FOR USE IN BREATHING OXYGEN (CONTD)

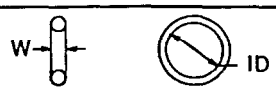

AS 568A STANDARDIZED DASH NO.	NOMINAL DIMENSIONS ID	W	MS9068
-035	2.239	0.070	-035
-036	2.364	0.070	-036
-037	2.489	0.070	-037
-038	2.614	0.070	-038
-039	2.739	0.070	-039
-040	2.864	0.070	-040
-041	2.989	0.070	-041
-042	3.239	0.070	-042
-043	3.489	0.070	-043
-044	3.739	0.070	-044
-045	3.989	0.070	-045
-046	4.239	0.070	
-047	4.489	0.070	
-048	4.739	0.070	
-049	4.989	0.070	
-050	5.239	0.070	
-051 through -101	O-ring sizes not assigned.		
-102	0.049	0.103	
-103	0.081	0.103	
-104	0.112	0.103	
-105	0.143	0.103	
-106	0.174	0.103	
-107	0.206	0.103	
-108	0.237	0.103	
-109	0.299	0.103	
-110	0.362	0.103	-110
-111	0.424	0.103	-111
-112	0.487	0.103	-112
-113	0.549	0.103	-113
-114	0.612	0.103	-114
-115	0.674	0.103	-115
-116	0.737	0.103	-116
-117	0.799	0.103	-117
-118	0.862	0.103	-118
-119	0.924	0.103	-119
-120	0.987	0.103	-120
-121	1.049	0.103	-121
-122	1.112	0.103	-122
-123	1.174	0.103	-123
-124	1.237	0.103	-124
-125	1.299	0.103	-125
-126	1.362	0.103	-126
-127	1.424	0.103	-127
-128	1.487	0.103	-128
-129	1.549	0.103	-129
-130	1.612	0.103	-130
-131	1.674	0.103	-131
-132	1.737	0.103	-132
-133	1.799	0.103	-133
-134	1.862	0.103	-134
-135	1.925	0.103	-135
-136	1.987	0.103	-136
-137	2.050	0.103	-137
-138	2.112	0.103	-138
-139	2.175	0.103	-139
-140	2.237	0.103	-140
-141	2.300	0.103	-141
-142	2.362	0.103	-142
-143	2.425	0.103	-143
-144	2.487	0.103	-144
-145	2.550	0.103	-145
-146	2.612	0.103	-146
-147	2.675	0.103	-147
-148	2.737	0.103	-148
-149	2.800	0.103	-149
-150	2.862	0.103	-150
-151	2.987	0.103	-151
-152	3.237	0.103	-152
-153	3.487	0.103	-153
-154	3.737	0.103	-154

AS 568A STANDARDIZED DASH NO.	NOMINAL DIMENSIONS ID	W	MS9068
-155	3.987	0.103	-155
-156	4.237	0.103	-156
-157	4.487	0.103	-157
-158	4.737	0.103	-158
-159	4.987	0.103	-159
-160	5.237	0.103	-160
-161	5.487	0.103	-161
-162	5.737	0.103	-162
-163	5.987	0.103	-163
-164	6.237	0.103	
-165	6.487	0.103	
-166	6.737	0.103	
-167	6.987	0.103	
-168	7.237	0.103	
-169	7.487	0.103	
-170	7.737	0.103	
-171	7.987	0.103	
-172	8.237	0.103	
-173	8.487	0.103	
-171	8.737	0.103	
-175	8.987	0.103	
-176	9.237	0.103	
-177	9.178	0.103	
-178	9.737	0.103	
-179 through -200	O-ring sizes not assigned.		
-201	0.171	0.139	
-202	0.234	0.139	
-203	0.296	0.139	
-204	0.359	0.139	
-205	0.421	0.139	
-206	0.484	0.139	
-207	0.546	0.139	
-208	0.609	0.139	
-209	0.671	0.139	
-210	0.734	0.139	-210
-211	0.796	0.139	-211
-212	0.859	0.139	-212
-213	0.921	0.139	-213
-214	0.984	0.139	-214
-215	1.046	0.139	-215
-216	1.109	0.139	-216
-217	1.171	0.139	-217
-218	1.234	0.139	-218
-219	1.296	0.139	-219
-220	1.359	0.139	-220
-221	1.421	0.139	-221
-222	1.484	0.139	-222
-223	1.609	0.139	-223
-224	1.734	0.139	-224
-225	1.859	0.139	-225
-226	1.984	0.139	-226
-227	2.109	0.139	-227
-228	2.234	0.139	-228
-229	2.359	0.139	-229
-230	2.484	0.139	-230
-231	2.609	0.139	-231
-232	2.734	0.139	-232
-233	2.859	0.139	-233
-234	2.984	0.139	-234
-235	3.109	0.139	-235
-236	3.234	0.139	-236
-237	3.359	0.139	-237
-238	3.484	0.139	-238
-239	3.609	0.139	-239
-240	3.734	0.139	-240
-241	3.859	0.139	-241
-242	3.984	0.139	-242
-243	4.109	0.139	-243
-244	4.234	0.139	-244
-245	4.359	0.139	-245

Chart 5A GLAND O-RINGS FOR USE IN BREATHING OXYGEN (CONTD)

AS 568A STANDARDIZED DASH NO.	NOMINAL DIMENSIONS ID	W	MS9068	AS 568A STANDARDIZED DASH NO.	NOMINAL DIMENSIONS ID	W	MS9068
-246	4.484	0.139	-246	-339	3.225	0.210	-339
-247	4.609	0.139	-247	-340	3.350	0.210	-340
-248	4.734	0.139	-248	-341	3.475	0.210	-341
-249	4.859	0.139	-249	-342	3.600	0.210	-342
-250	4.984	0.139	-250	-343	3.725	0.210	-343
-251	5.109	0.139	-251	-344	3.850	0.210	-344
-252	5.234	0.139	-252	-345	3.975	0.210	-345
-253	5.359	0.139	-253	-346	4.100	0.210	-346
-254	5.484	0.139	-254	-347	4.225	0.210	-347
-255	5.609	0.139	-255	-348	4.350	0.210	-348
-256	5.734	0.139	-256	-349	4.475	0.210	-349
-257	5.859	0.139	-257	-350	4.600	0.210	
-258	5.984	0.139	-258	-351	4.725	0.210	
-259	6.234	0.139	-259	-352	4.850	0.210	
-260	6.484	0.139	-260	-353	4.975	0.210	
-261	6.734	0.139	-261	-354	5.100	0.210	
-262	6.984	0.139	-262	-355	5.225	0.210	
-263	7.234	0.139	-263	-356	5.350	0.210	
-264	7.484	0.139	-264	-357	5.475	0.210	
-265	7.734	0.139	-265	-358	5.600	0.210	
-266	7.984	0.139	-266	-359	5.725	0.210	
-267	8.234	0.139	-267	-360	5.850	0.210	
-268	8.484	0.139	-268	-361	5.975	0.210	
-269	8.734	0.139	-269	-362	6.225	0.210	
-270	8.984	0.139	-270	-363	6.475	0.210	
-271	9.234	0.139	-271	-361	6.725	0.210	
-272	9.484	0.139	-272	-365	6.975	0.210	
-273	9.734	0.139	-273	-366	7.225	0.210	
-274	9.984	0.139	-271	-367	7.475	0.210	
-275	10.484	0.139	-275	-368	7.725	0.210	
-276	10.984	0.139	-276	-369	7.975	0.210	
-277	11.484	0.139	-277	-370	8.225	0.210	
-278	11.984	0.139	-278	-371	8.475	0.210	
-279	12.984	0.139	-279	-372	8.725	0.210	
-280	13.984	0.139	-280	-373	8.975	0.210	
-281	14.984	0.139	-281	-374	9.225	0.210	
-282	15.955	0.139		-375	9.475	0.210	
-283	16.955	0.139		-376	9.725	0.210	
-284	17.955	0.139		-377	9.975	0.210	
-285 through -308	O-ring sizes not assigned.			-378	10.475	0.210	
-309	0.412	0.210		-379	10.975	0.210	
-310	0.475	0.210		-380	11.475	0.210	
-311	0.537	0.210		-381	11.975	0.210	
-312	0.600	0.210		-382	12.975	0.210	
-313	0.662	0.210		-383	13.975	0.210	
-314	0.725	0.210		-384	14.975	0.210	
-315	0.787	0.210		-385	15.955	0.210	
-316	0.850	0.210		-386	16.955	0.210	
-317	0.912	0.210		-387	17.955	0.210	
-318	0.975	0.210		-388	18.955	0.210	
-319	1.037	0.210		-389	19.955	0.210	
-320	1.100	0.210		-390	20.955	0.210	
-321	1.162	0.210		-391	21.955	0.210	
-322	1.225	0.210		-392	22.940	0.210	
-323	1.289	0.210		-393	23.940	0.210	
-324	1.350	0.210		-391	24.940	0.210	
-325	1.475	0.210	-325	-395	25.940	0.210	
-326	1.600	0.210	-326	-396 through -424	O-ring sizes not assigned.		
-327	1.725	0.210	-327	-425	4.475	0.275	-425
-328	1.850	0.210	-328	-426	4.600	0.275	-426
-329	1.975	0.210	-329	-427	4.725	0.275	-427
-330	2.100	0.210	-330	-428	4.850	0.275	-428
-331	2.225	0.210	-331	-429	4.975	0.275	-429
-332	2.350	0.210	-332	-430	5.100	0.275	-430
-333	2.475	0.210	-333	-431	5.225	0.275	-431
-334	2.600	0.210	-334	-432	5.350	0.275	-432
-335	2.725	0.210	-335	-433	5.475	0.275	-433
-336	2.850	0.210	-336	-434	5.600	0.275	-434
-337	2.975	0.210	-337	-435	5.725	0.275	-435
-338	3.100	0.210	-338	-436	5.850	0.275	-436

Chart 5A GLAND O-RINGS FOR USE IN BREATHING OXYGEN (CONTD)

AS 568A STANDARDIZED DASH NO.	NOMINAL DIMENSIONS ID	NOMINAL DIMENSIONS W	MS9068	AS 568A STANDARDIZED DASH NO.	NOMINAL DIMENSIONS ID	NOMINAL DIMENSIONS W	MS9068
-437	5.975	0.275	-437	-457	13.975	0.275	-457
-438	6.225	0.275	-438	-458	14.475	0.275	-458
-439	6.475	0.275	-439	-459	14.975	0.275	-459
-440	6.725	0.275	-440	-460	15.475	0.275	-460
-441	6.975	0.275	-441	-461	15.955	0.275	-461
-442	7.225	0.275	-442	-462	16.455	0.275	-462
-443	7.475	0.275	-443	-463	16.955	0.275	-463
-444	7.725	0.275	-444	-464	17.455	0.275	-464
-445	7.975	0.275	-445	-465	17.955	0.275	-465
-446	8.475	0.275	-446	-466	18.455	0.275	-466
-447	8.975	0.275	-447	-467	18.955	0.275	-467
-448	9.475	0.275	-448	-468	19.455	0.275	-468
-449	9.975	0.275	-449	-469	19.955	0.275	
-450	10.475	0.275	-450	-470	20.955	0.275	
-451	10.975	0.275	-451	-471	21.955	0.275	
-452	11.475	0.275	-452	-472	22.940	0.275	
-453	11.975	0.275	-453	-473	23.940	0.275	
-454	12.475	0.275	-454	-474	24.940	0.275	
-455	12.975	0.275	-455	-475	25.940	0.275	
-456	13.475	0.275	-456				

Chart 5B BOSS O-RINGS FOR USE IN BREATHING OXYGEN

AS 568A STANDARDIZED DASH NO.	NOMINAL DIMENSIONS TUBE OD	NOMINAL DIMENSIONS ID	NOMINAL DIMENSIONS W	906	MS9385
-901	3/32	0.185	0.056		-01
-902	1/8	0.239	0.064	-2	-02
-903	3/16	0.301	0.064	-3	-03
-904	1/4	0.351	0.072	-4	-04
-905	5/16	0.414	0.072	-5	-05
-906	3/8	0.468	0.078	-6	-06
-907	7/16	0.530	0.082		-07
-908	1/2	0.644	0.087	-8	-08
-909	9/16	0.706	0.097		-09
-910	5/8	0.755	0.097	-10	-10
-911	11/16	0.863	0.116		-11
-912	3/4	0.924	0.116	-12	-12
-913	13/16	0.986	0.116		-13
-914	7/8	1.047	0.116		-14
-916	1	1.171	0.116	-16	-16
-918	1-1/8	1.355	0.116		-18
-920	1-1/4	1.475	0.118	-20	-20
-924	1-1/2	1.720	0.118	-24	-24
-928	1-3/4	2.090	0.118	-28	-28
-932	2	2.337	0.118	-32	-32