WELCOME TO TECHNICAL ORDER 00-105E-9, 1 JULY 2004, REVISION 9.

THIS IS SEGMENT 5 COVERING CHAPTER 6 FROM THE C-20 TO THE C-40.

TO NAVIGATE

CLICK ON THE BOOKMARKS AND CLICK ON THE (+) SYMBOLS, THEN CLICK ON SUBJECT LINKS TO GO TO SPECIFIC VIEWS IN THIS SEGMENT.

CONTINUE

NOTICE

CONTACT

TO GO DIRECTLY TO THE TECHNICAL ORDER,
CLICK ON THE CONTINUE BUTTON.

TO SEE THE SEGMENT INFORMATION CHANGE NOTICE,
CLICK ON THE NOTICE BUTTON.

TO CONTACT THE TECHNICAL CONTENT MANAGER ,
CLICK ON THE CONTACT BUTTON.

TECHNICAL ORDER 00-105E-9 TECHNICAL CONTENT MANAGER

WRITTEN CORRESPONDENCE:

HQ AFCESA/CEXF
ATTN: Fire and Emergency Services Egress Manager
139 Barnes Drive Suite 1
Tyndall AFB, Florida 32403-5319

E-MAIL: Tom.Stemphoski@tyndall.af.mil

INTERNET: HQ AFCESA Fire and Emergency Services PUBLIC WEB PAGE:
http://www.afcesa.af.mil/CEX/fire/index.asp

PHONE: (850) 283-6150
DSN 523-6150

FAX: (850) 283-6390
DSN 523-6390

For technical order improvements, correcting procedures, and other inquiries, please use the above media most convenient.

SEGMENT 5 INFORMATION CHANGE NOTICE

This page is provided to notifiy the user of any informational changes made to Technical Order 00-105E-9 in this Segment and the current Revision. Informational changes will be referenced in the Adobe Reader's Bookmark tool as a designator symbol illustrated as a <[C]> for quick reference to the right of the affected aircraft. The user shall insure the most current information contained in this TO is used for his operation. Retaining out of date rescue information can negatively affect the user's operability and outcome of emergencies. If the user prints out pages his unit requires, the user shall print the affected page(s), remove and destroy the existing page(s), and insert the newly printed page(s) in the binder provided for that purpose. A Master of this TO shall be retained in the unit's library for reference, future printing requirements and inspections.

CHAPTER	AIRCRAFT	PAGE	EXPLANATION OF CHANGE
6	ALL	ALL	Segment renumbered.
6	C-40	ALL	File added to this segment and incorporates Safety Supplement -4, dated 27 August 2003

NOTE

Chapter 6 contains emergency rescue and mishap response information for the following aircraft:

USAF	**C-5**
USAF	**C-7**
USAF	**(V)C-9A/C**
USAF	**C-12F**
USAF	**C-12J**
USAF	**C-17A**
USAF	**C-18**
USAF	**C-18D**
USAF	**C-20**
USAF	**C-20H**
USAF	**C-21**
USAF	**C-22B**
USAF	**C-23A**
USAF	**C-26**
USAF	**C-27A**
USAF	**C-32A**
USAF	**C-37A**
USAF	**C-38A**
USAF	**C-40**
USAF	**C-130**
USAF	**C-130J**
USAF	**C-135**
USAF	**C-135E**
USAF	**NKC-135E**
USAF	**OC-135B**
USAF	**RC-135S**
USAF	**RC-135U**
USAF	**RC-135V/W**
USAF	**TC-135S**
USAF	**TC-135W**
USAF	**WC-135W**
USAF	**(V)C-137**
USAF	**C-141**
USAF	**NC-141A**
USAF	**C-212**
USAF	**KC-10A**

AIRFRAME MATERIALS, FLAMMABLE LIQUID, AND COMPONENTS

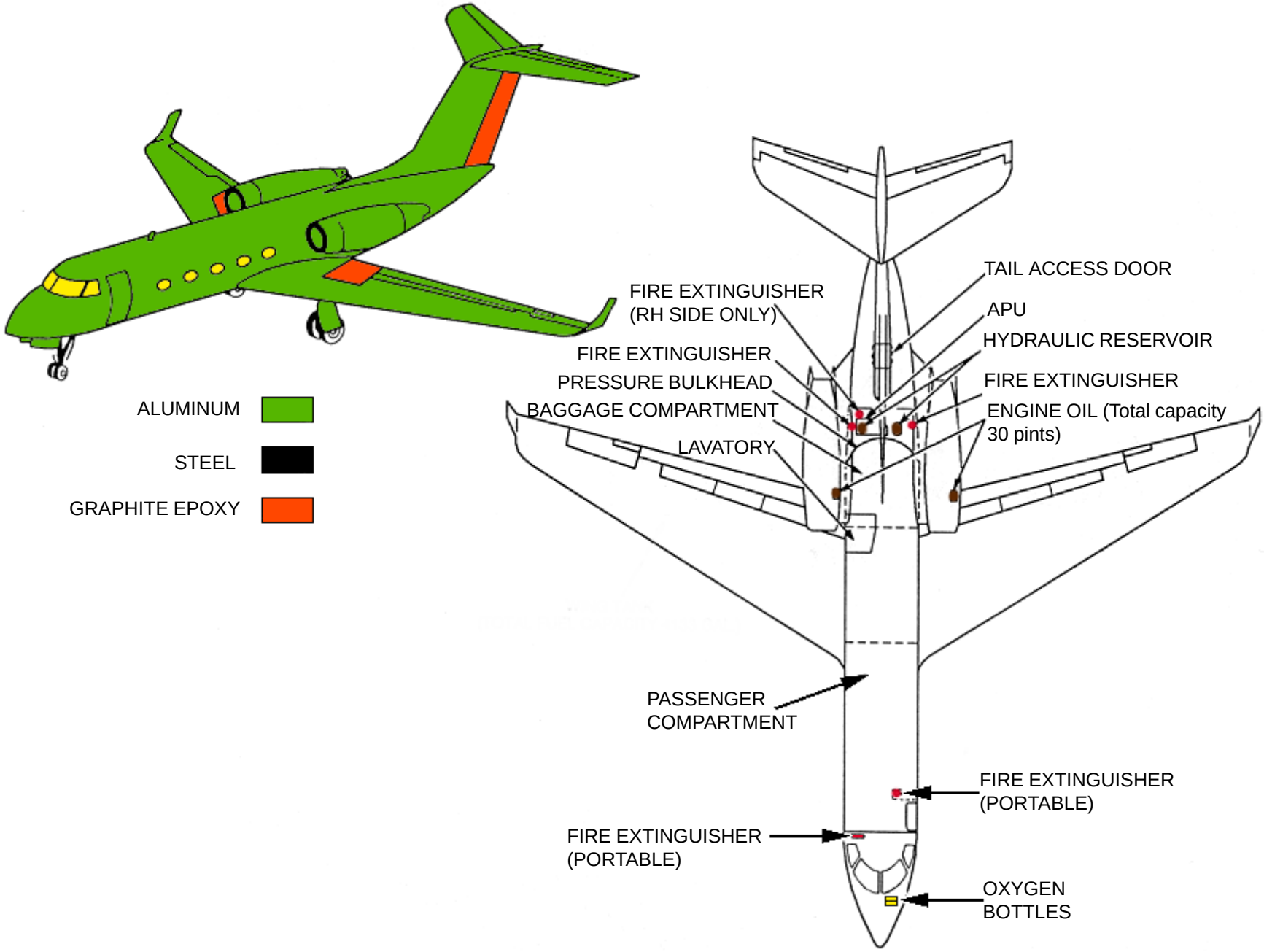

AIRCRAFT DANGER AREAS

NOTE:

Aircraft is static at sea level with no wind for the following details at idle and maximum thrust of Rolls-Royce installed engines on A and B models (Gulfstream III).

a. Inlet Suction - 20 feet

b. Turbine Blade Failure - 300 feet

c. Engine Exhaust - 250 feet

d. APU Exhaust - 5 feet

e. Radiation FWD 270 degree Arc - 15 feet

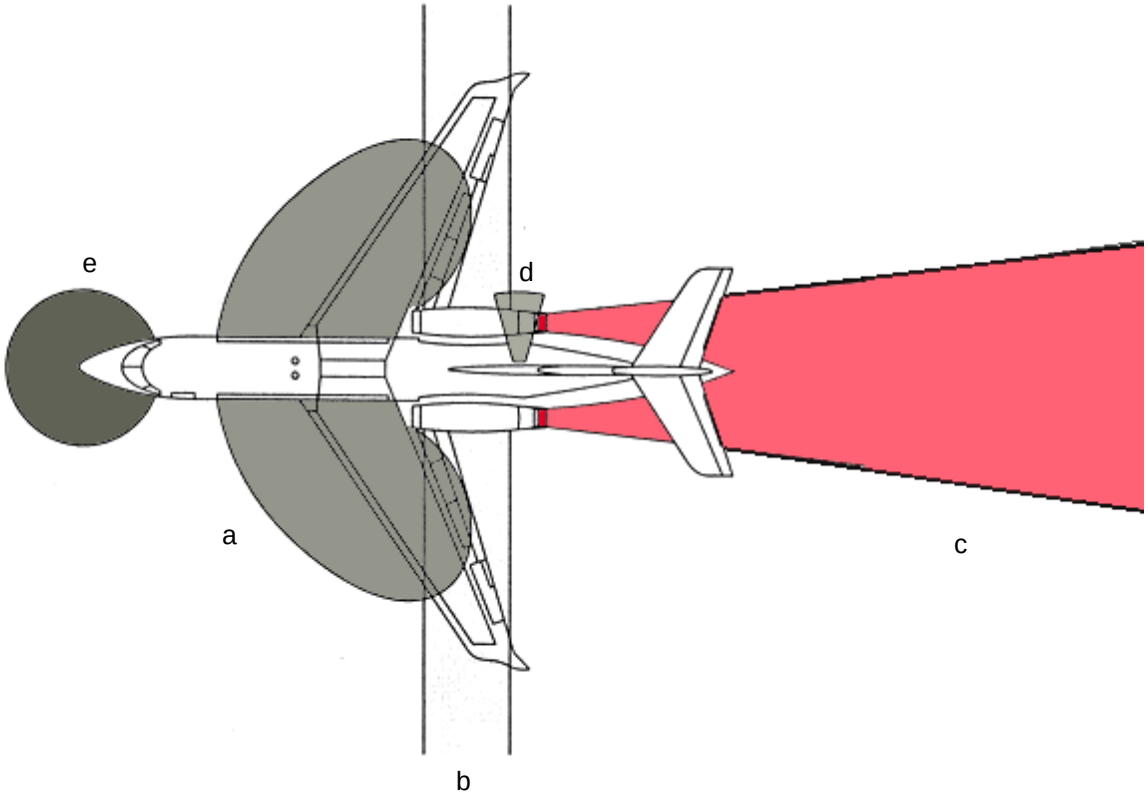

SPECIAL TOOLS/EQUIPMENT
Power Rescue Saw
12 Ft Ladder
Fire Drill II

DIMENSIONS:
Wing Span 77' 10"
Length 83' 1"
Height 24' 41/2"

AIRCRAFT ENTRY ALL MODELS

1. NORMAL ENTRY
a. Push inner latch handle and then push outer hatch handle

WARNING

Door is hinged at bottom and will fall rapidly.

b. Pull door open.

NOTE:
Main door will not open fully with gear up.

2. EMERGENCY ENTRY

NOTE:
Two emergency windows are located on each side of the aircraft.

a. Push button to open access panel.

b. Pull handle, located inside access panel up to release window and push window in.

3. CUT-IN

CAUTION

Windshield panels cannot be chopped or broken out.

a. Cut fuselage as required.

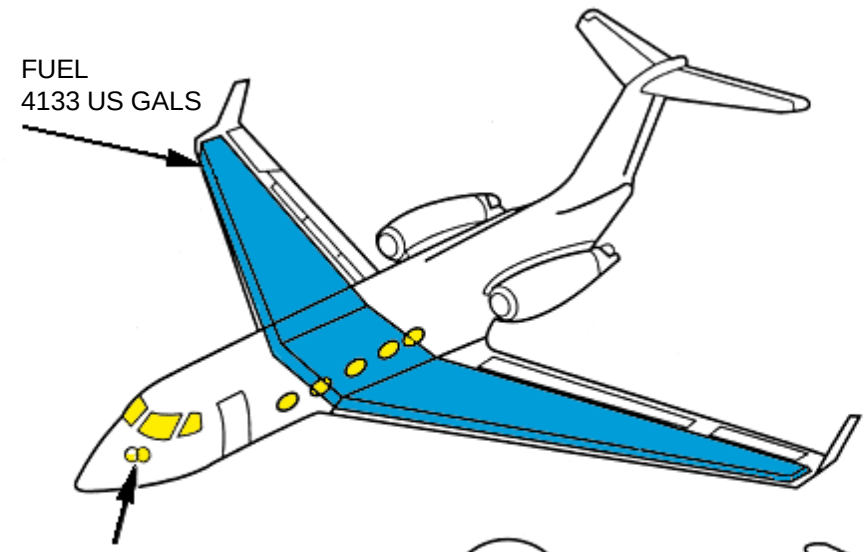

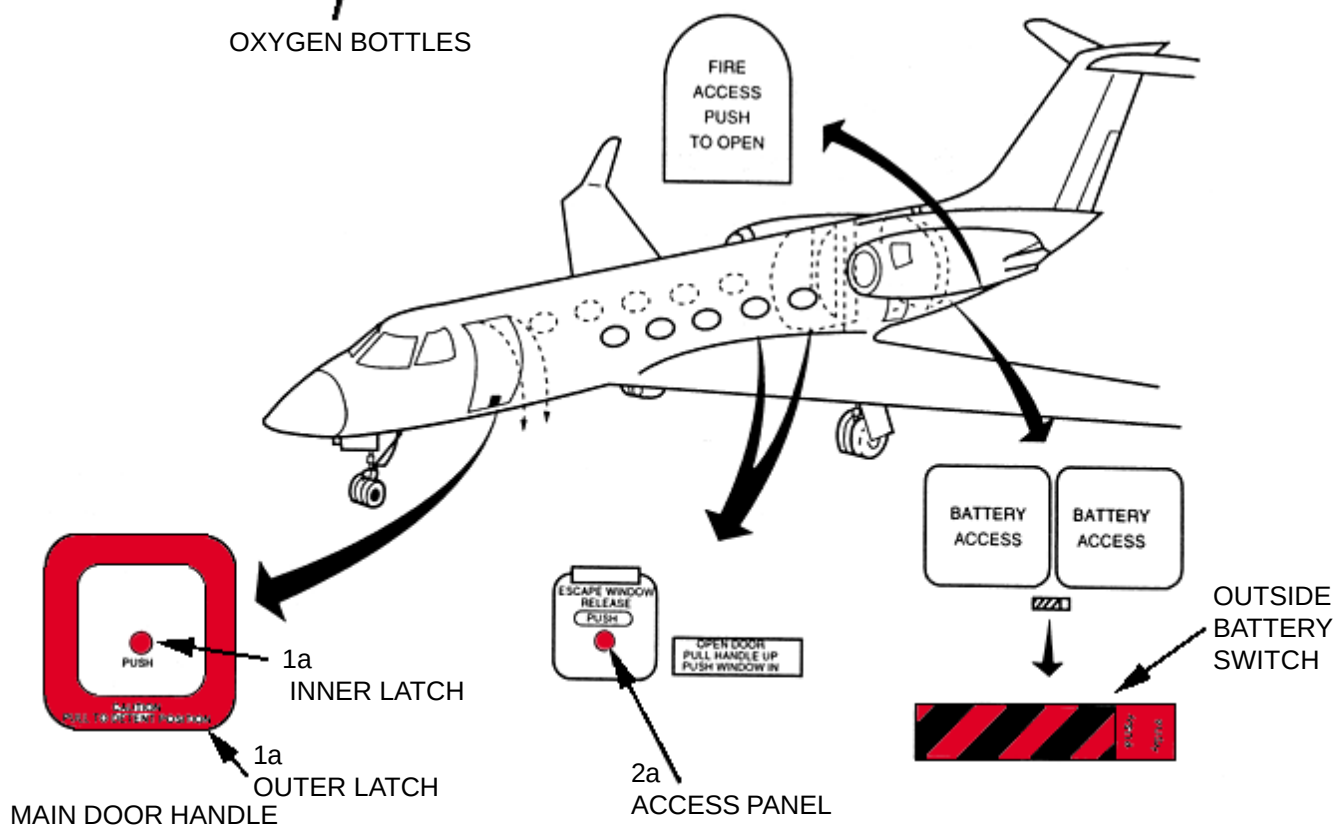

ENGINE SHUTDOWN AND AIRCREW EXTRACTION

1. ENGINE SHUTDOWN

CAUTION

Battery switch must be in the ON position to operate the fire emergency control handles.

a. Pull Fuel Cock, located on the center control pedestal, to the shut position.

b. Pull Fire T-Handles, located top center of instrument panel.

c. Place L/R generator, L/R alternator and Battery switches, located on overhead console to the middle OFF position on rocker switches.

d. Pull oxygen valve, located lower left of instrument panel to cut off oxygen.

2. AIRCREW EXTRACTION

a. Unlatch lap belts and remove shoulder harness from crewmember(s).

NOTE:
Passenger seats are equipped with lap belts only.

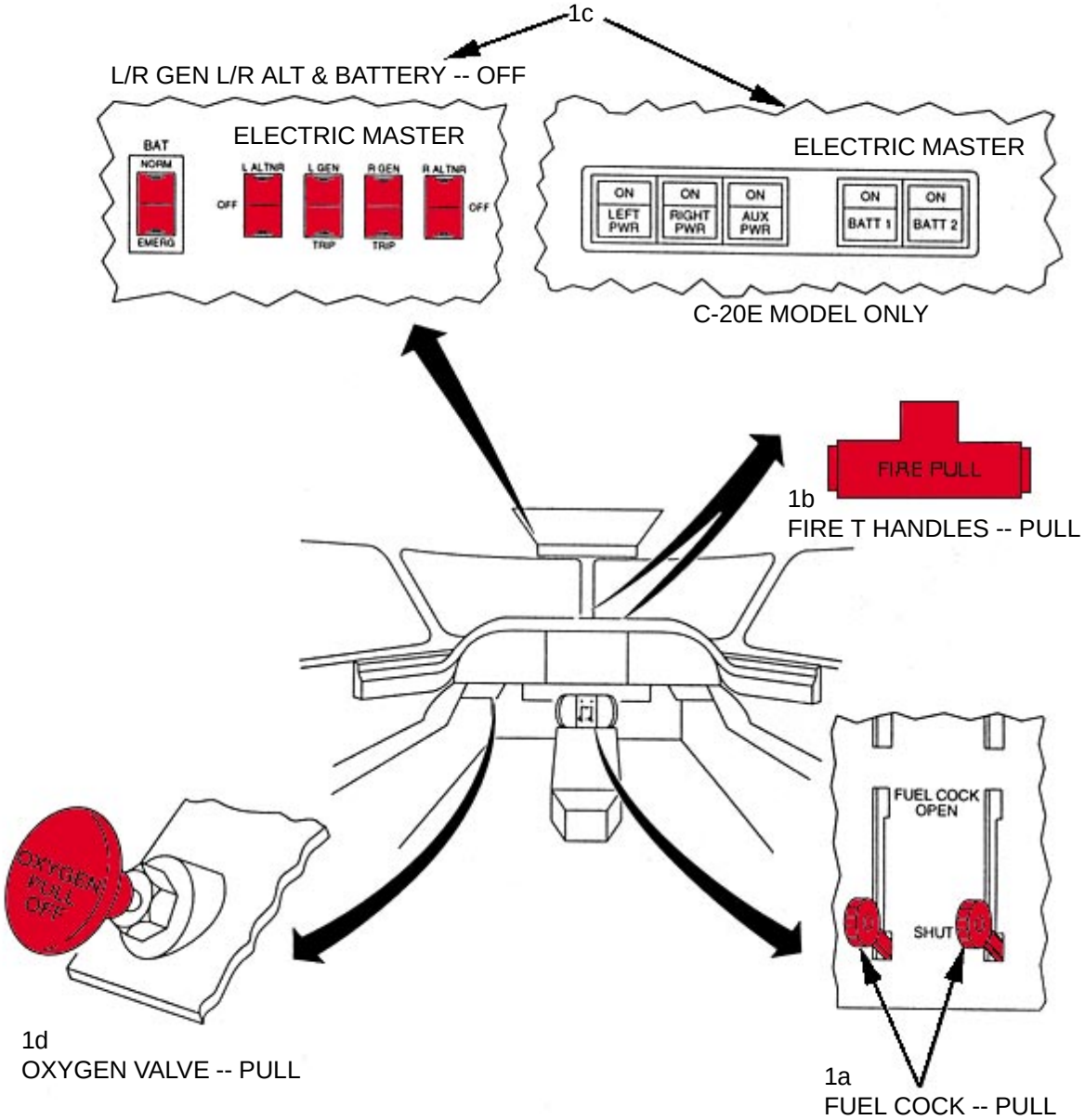

AIRCRAFT HAZARD AREAS

WEATHER RADAR RADIATION AREAS

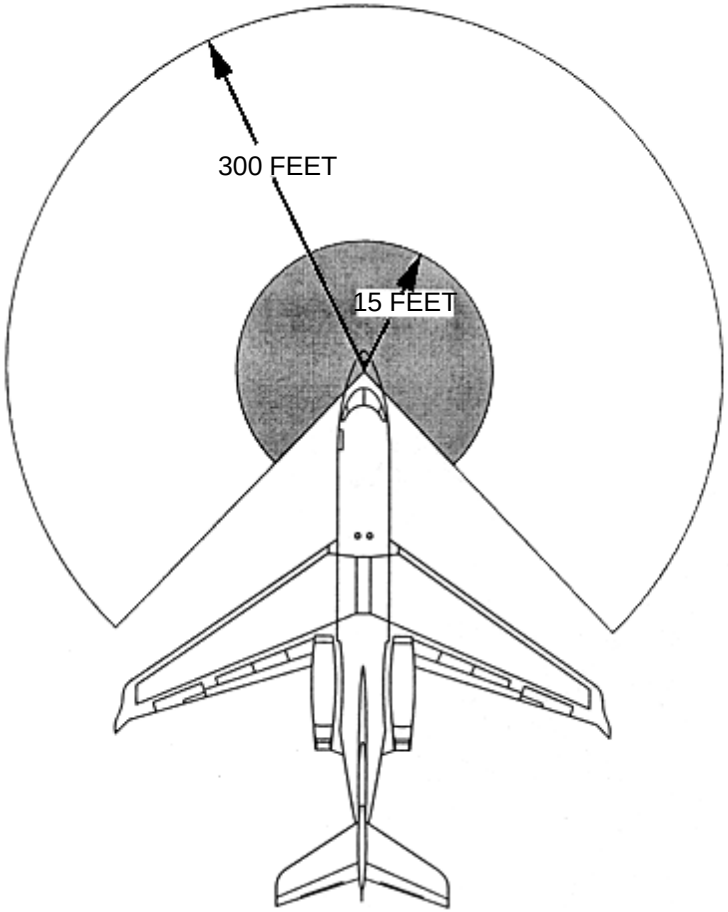

WARNING

AREA HAZARDOUS TO PERSONNEL

POSSIBLE FUEL IGNITION AREA (DO NOT OPERATE RADAR IN REFUELING AREAS OR NEAR FUEL SPILLS)

HF AND SATCOM RADIATION AREAS

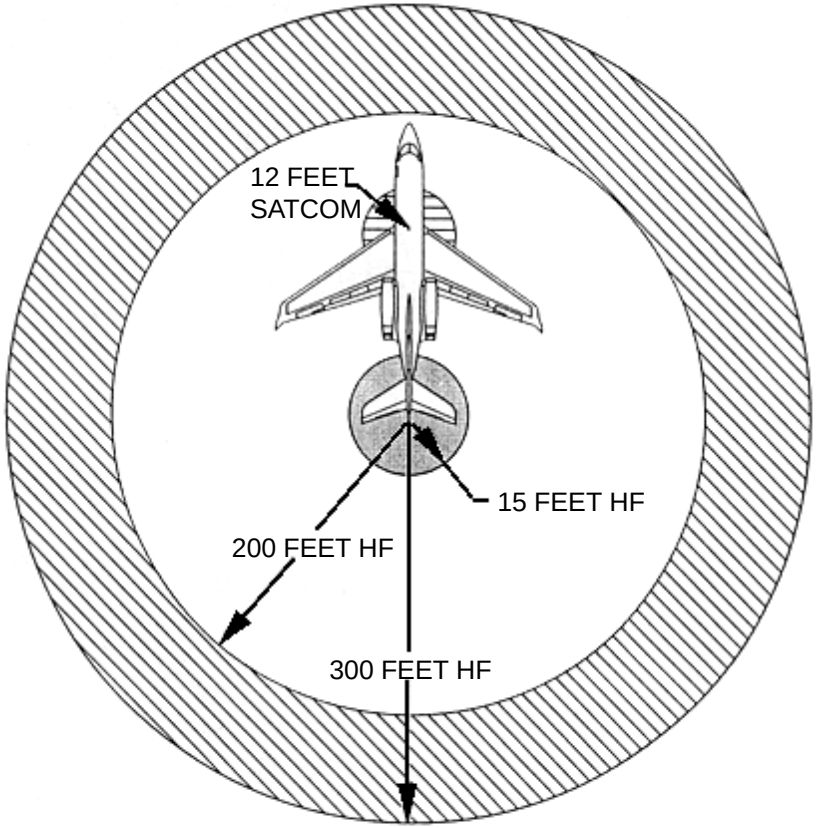

WARNING

DO NOT OPERATE HF TRANSMITTER:

WHEN PERSONNEL OR CONTAINERS CONTAINING FLAMMABLE OR EXPLOSIVE MATERIALS ARE WITHIN 15 FEET OF ANTENNAS

WITHIN 200 FEET OF UNLOADED WEAPONS OR WARHEADS, LOADED WEAPONS IN AN AIRCRAFT WITH THE BOMB BAY DOORS OPEN, OR ANY OTHER POSSIBILITY OF SETTING OFF WEAPONS WITH RF RADIATIONS

WHEN REFUELING THIS AIRCRAFT OR WHEN WITHIN 300 FEET OF OTHER REFUELING OPERATIONS

WHEN PERSONNEL OR CONTAINERS CONTAINING FLAMMABLE OR EXPLOSIVE MATERIALS ARE WITHIN 12 FEET OF ANTENNAS

AIRCRAFT DANGER AREAS

NOTE:

Aircraft is static at sea level with no wind for the following details at idle and maximum thrust of Rolls-Royce installed engines on H models (Gulfstream IV).

a. Inlet Suction - 20 feet
b. Turbine Blade Failure - 300 feet
c. Engine Exhaust - see expanded graphic
d. APU Exhaust - 5 feet
e. Radiation FWD 270 degree Arc - 15 feet (see additional radiation areas)

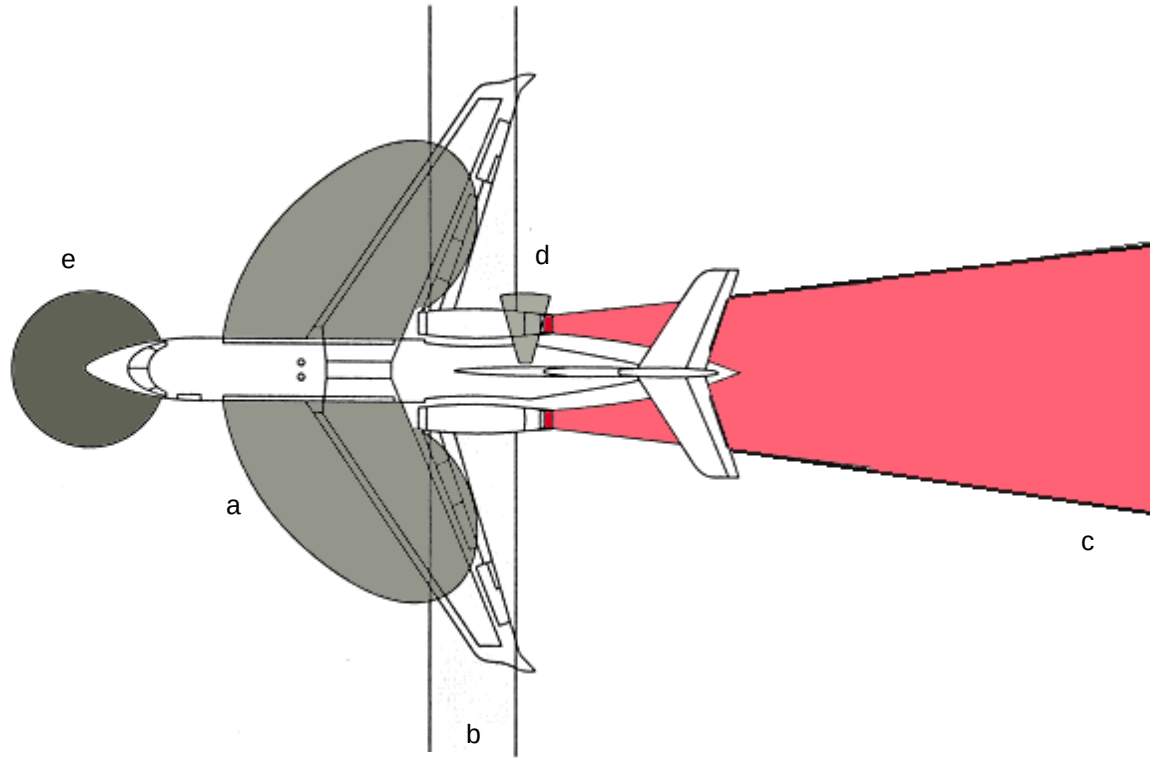

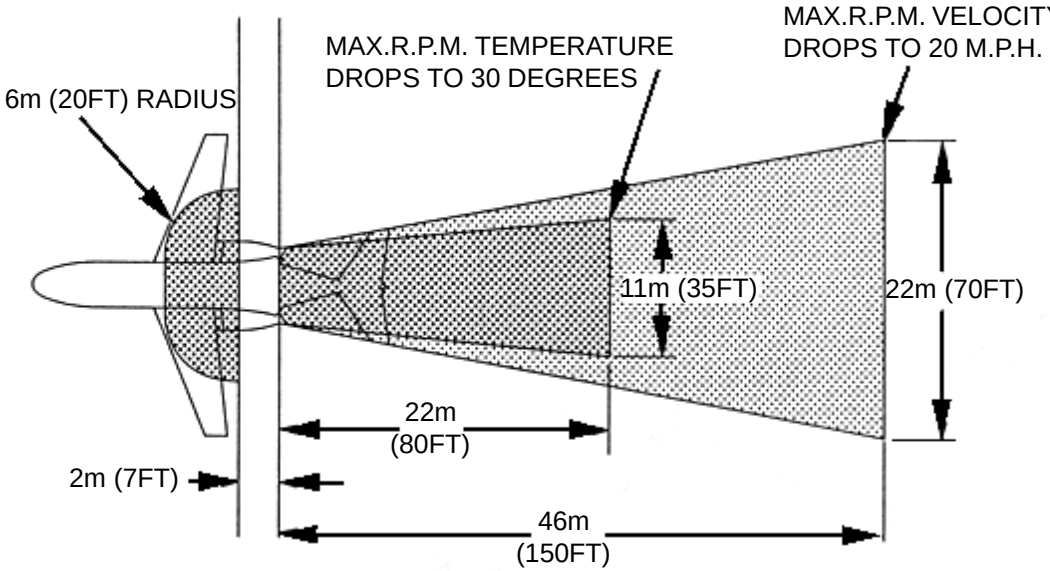

AREA TO BE CLEARED OF PERSONNEL BEFORE ENGINE START OR DURING RUNNING ENGINE AT IDLE

THIS ADDITIONAL AREA MUST BE CLEARED OF PERSONNEL BEFORE OPERATING AT MAXIMUM THRUST

AIRCRAFT HAZARDS AND DIMENSIONS

DANGER AREA - APU NOISE

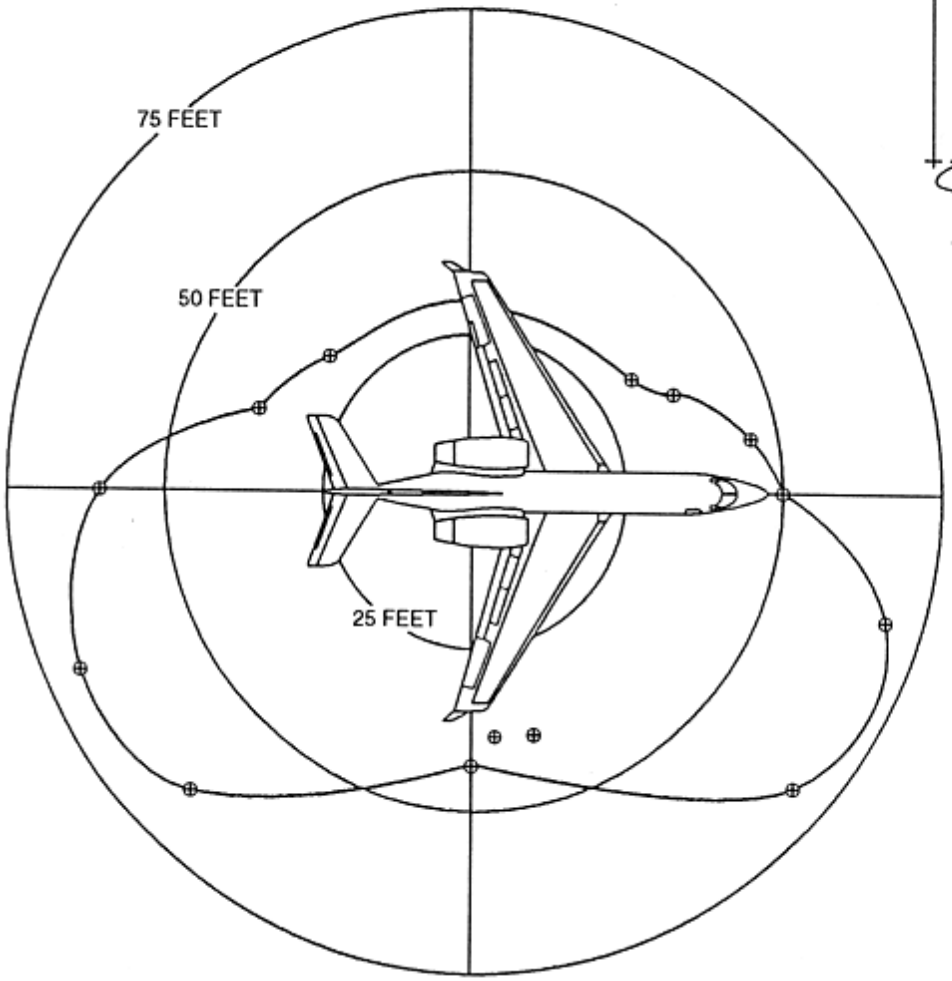

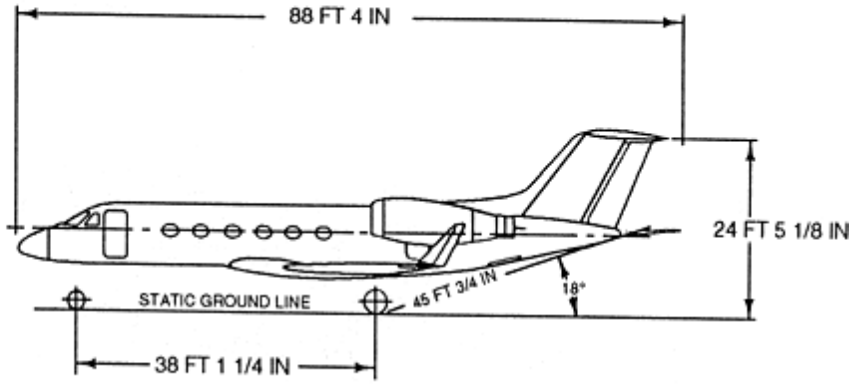

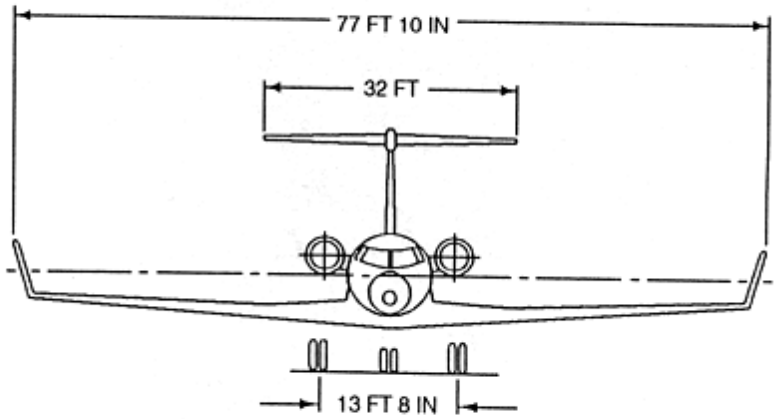

TWO HOUR NOISE EXPOSURE BOUNDARY (92 DB (A)) - NO HEARING PROTECTION. AUXILIARY POWER UNIT (APU) OPERATING ONLY.

NOTE:

NO RESTRICTION IF EAR PLUGS ARE USED.

AIRCRAFT CABIN ARRANGEMENT/CREW MOVEMENT (AF S/N 90-0300)

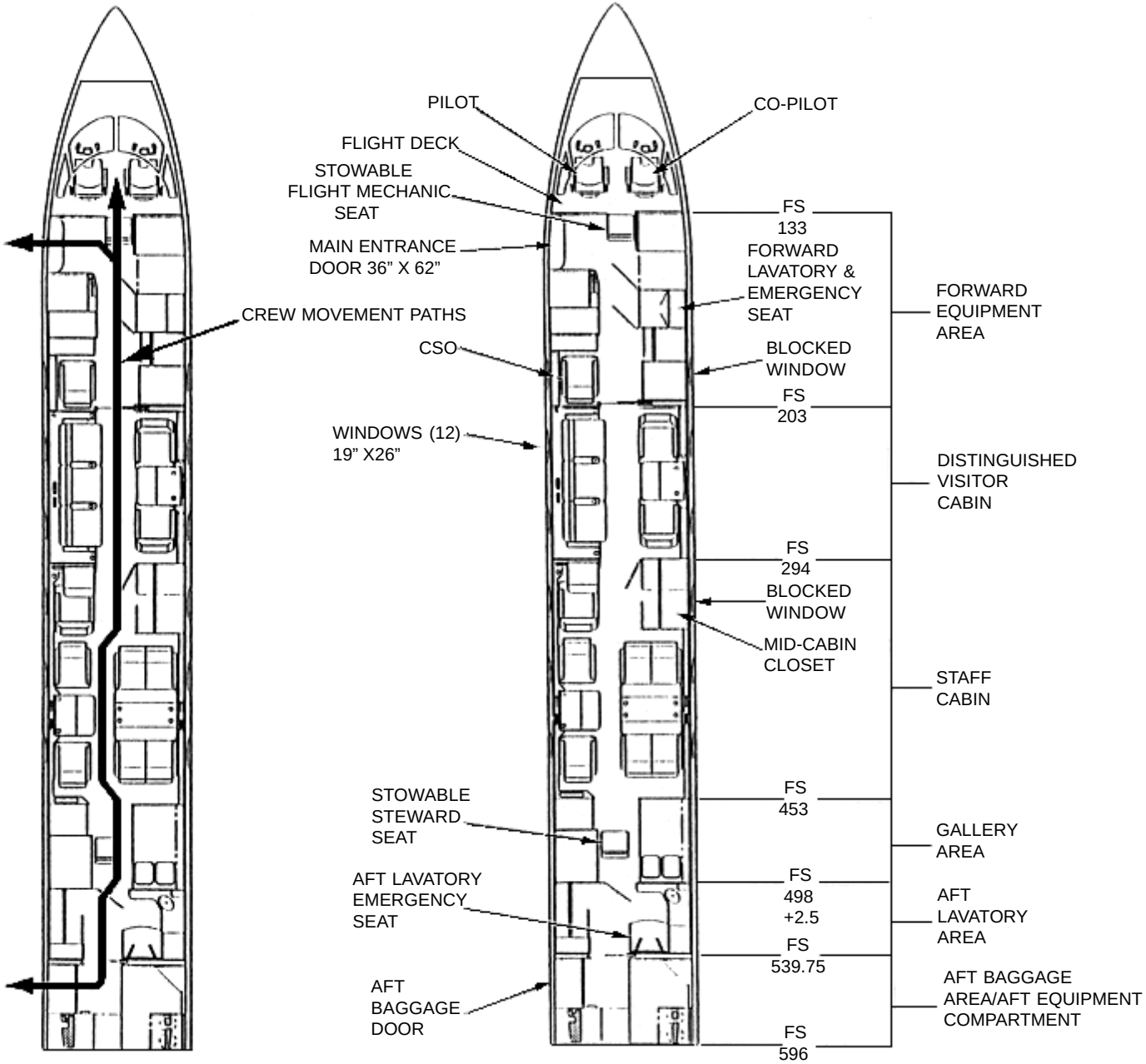

AIRCRAFT CABIN ARRANGEMENT/CREW MOVEMENT (AF S/N 92-0375)

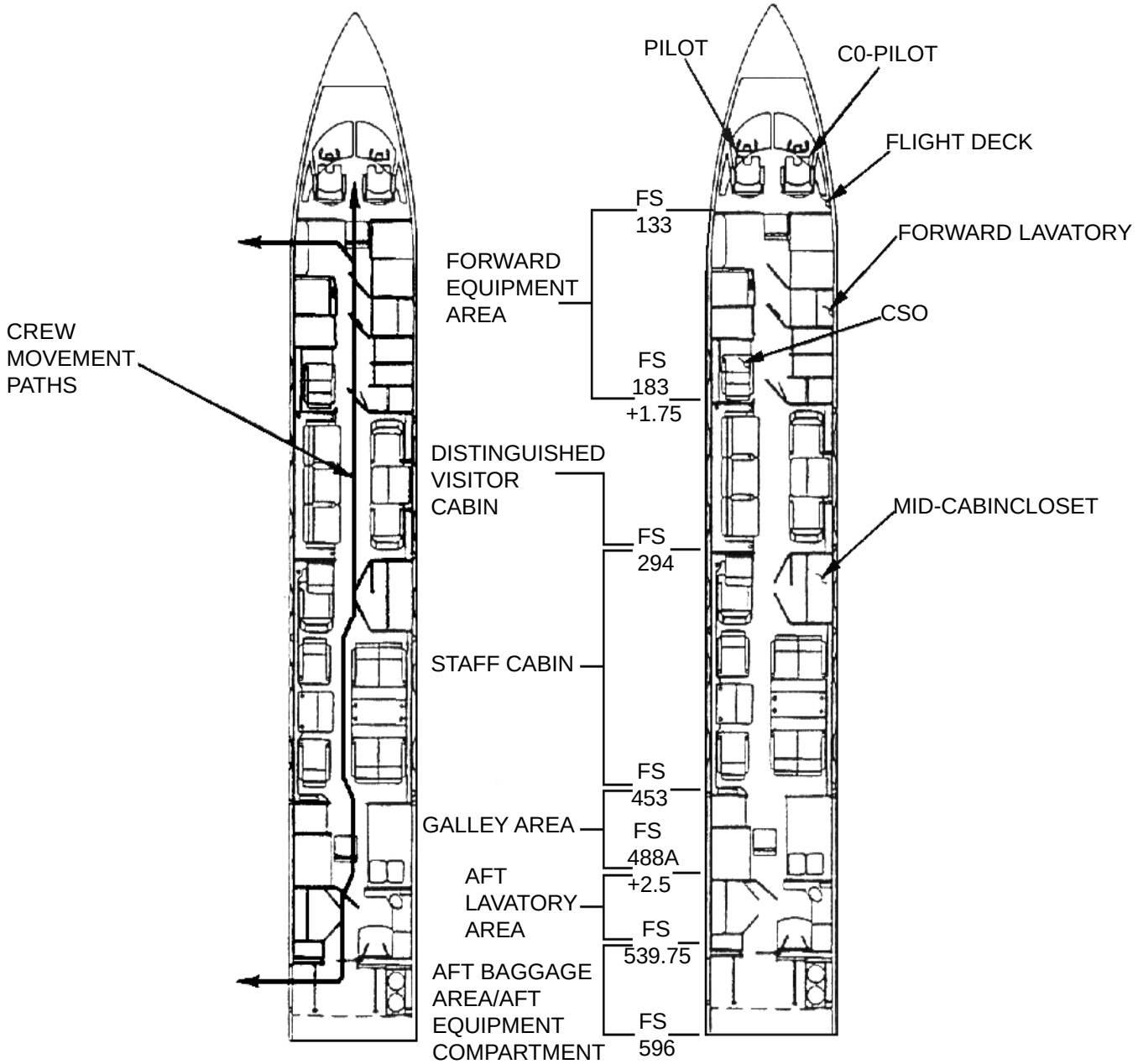

SPECIAL TOOLS/EQUIPMENT
Power Rescue Saw
12 Foot Ladder
Fire Drill II

AIRCRAFT DIMENSIONS
Length 88' 4"
Wing Span 77' 10"
Height 24' 5"

AIRCRAFT ENTRY

1. NORMAL ENTRY

a. Push Inner Latch handle and then pull Outer Latch handle.

WARNING

Door is hinged at bottom and will fall rapidly. Stand to the side and assist door opening to avoid injury.

b. Pull door open.

NOTE:
Main door will not open fully with nose gear up.

2. EMERGENCY ENTRY

NOTE:
Two emergency windows are located on each side over wings.

a. Push button to open access panel.

b. Pull handle, located inside access panel, up to release window and push window in.

3. CUT-IN

CAUTION

Windshield panels can not be cut-in, chopped, or broken out.

a. Cut or chop fuselage as required. See graphic for accessing.

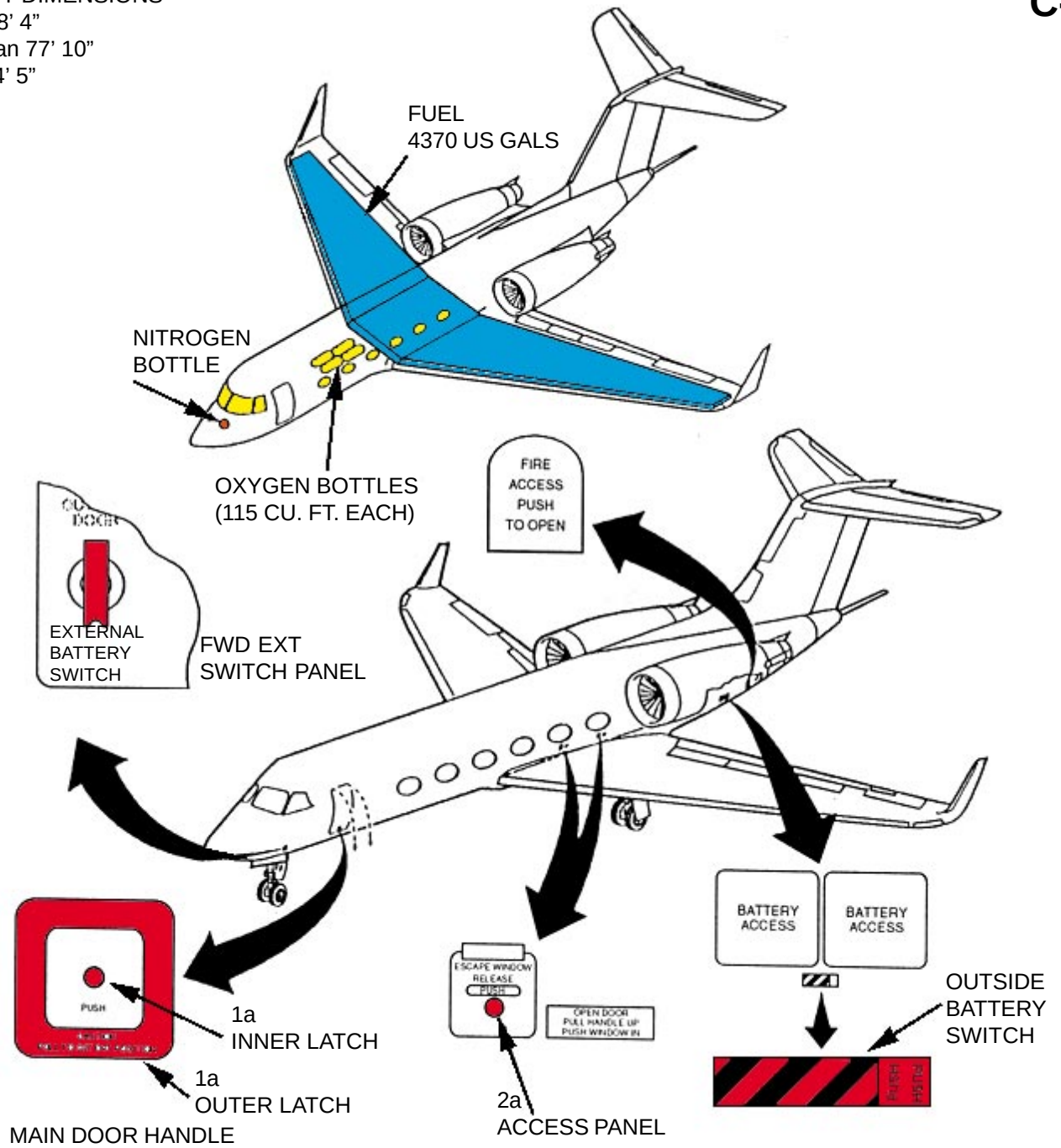

AIRCRAFT CUT-IN AND ACCESS POINTS

CAUTION

DO NOT ATTEMPT TO CHOP OR CUT WINDSHIELD IN FLIGHT DECK AREA.

NOTE:

- FUSELAGE MAY BE CUT OR CHOPPED AS REQUIRED.
- Aircraft can carry five crew members and 14 passengers.
- Aircraft can be arranged for rapid role changes. These roles include:
  Medical Evacuation -15 stretchers with attendees
  Cargo Transport with cargo door (5' 3" X 6' 11")
  Administration Transport
  Anti-submarine
  Electronic Warfare.
- AF S/N 92-0375 has the number one right hand window covered with a metal plate and painted to match the aircraft. DO NOT ATTEMPT CUT IN or ACCESS.
- AF S/N 92-0375 has changed some cabin layout features. The aft baggage compartment has no equipment racks, closet curtains have been replaced with hinged doors, the forward door into the DV is a hinged door rather that a pocket door, and a crew refreshment center is aft of the fwd lavatory.

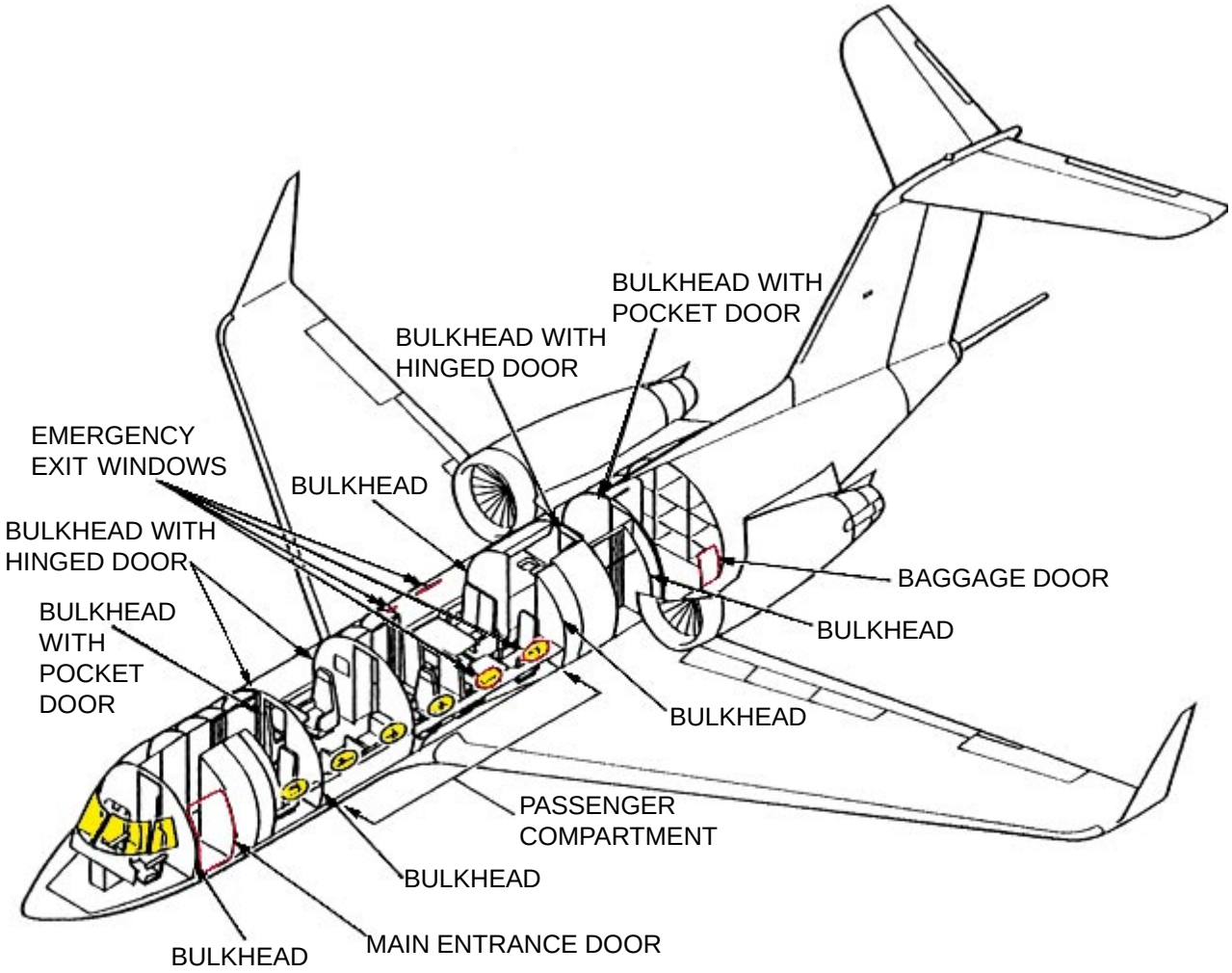

ENGINE SHUTDOWN AND AIRCREW EXTRACTION

1. ENGINE SHUTDOWN

CAUTION

Battery switch must be in the ON position to operate the fire emergency control handles.

a. Pull Fuel Cock, located on the center of the center control pedestal, aft to the shut position.
b. In case of engine fire, see illuminated fire handle, pull and turn the fire handles to discharge both fire bottles.

NOTE:
- If handle is not illuminated, depress button below handle while pulling fire handle.
- Two one-shot fire bottles are provided that may be discharged into either engine fire area.
  - To shoot one bottle to each engine; pull and R fire handles and turn each handle to position 1.
  - To shoot both bottles to one engine; pull engine fire handle (L or R) and turn to position 1 and then to position 2.

c. Press APU MASTER switch to OFF (no illumination) position.
d. Press APU Fire Extinguisher switch.
e. Place LEFT PWR, RIGHT PWR, AUX PWR, BATT 1 and BATT 2 switches, located on over head control panel to the OFF (no illumination) position.
f. Place crew and passenger OXYGEN switches, located lower left of pilot instrument panel, to OFF position.

2. AIRCREW EXTRACTION

a. Unlatch and remove lap belts and shoulder harness from crew members on flight deck, personnel in the divan, steward, and both lavatories areas.
b. Unlatch and remove lap belts from passengers.

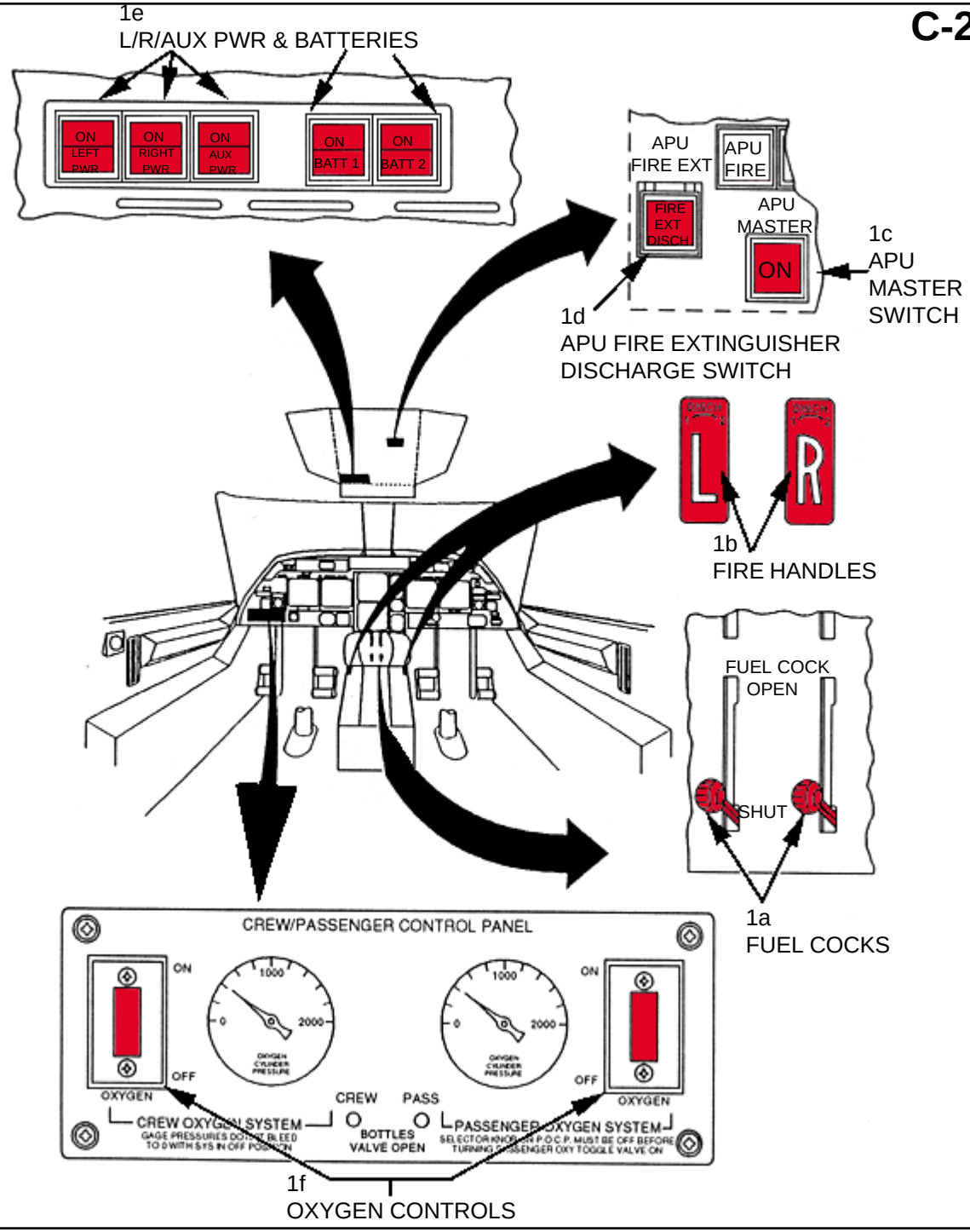

SPECIAL TOOLS/EQUIPMENT
Power Rescue Saw

AIRCRAFT ENTRY

1. NORMAL ENTRY

a. Lift handle and rotate handle clockwise to release upper half of door.

b. Raise upper door.

c. Rotate lower door handle, located in interior center of lower door, to the open position.

d. Release safety catch, located on left end of lower door, and gently lower door to full open position.

2. EMERGENCY ENTRY

NOTE:
Emergency escape window is the fourth window on the right side.

a. Depress button marked PUSH and rotate handle down.

b. Push the window into cabin.

3. CUT-IN

NOTE:
Do not attempt to chop windshield.

a. Cut around side windows as required.

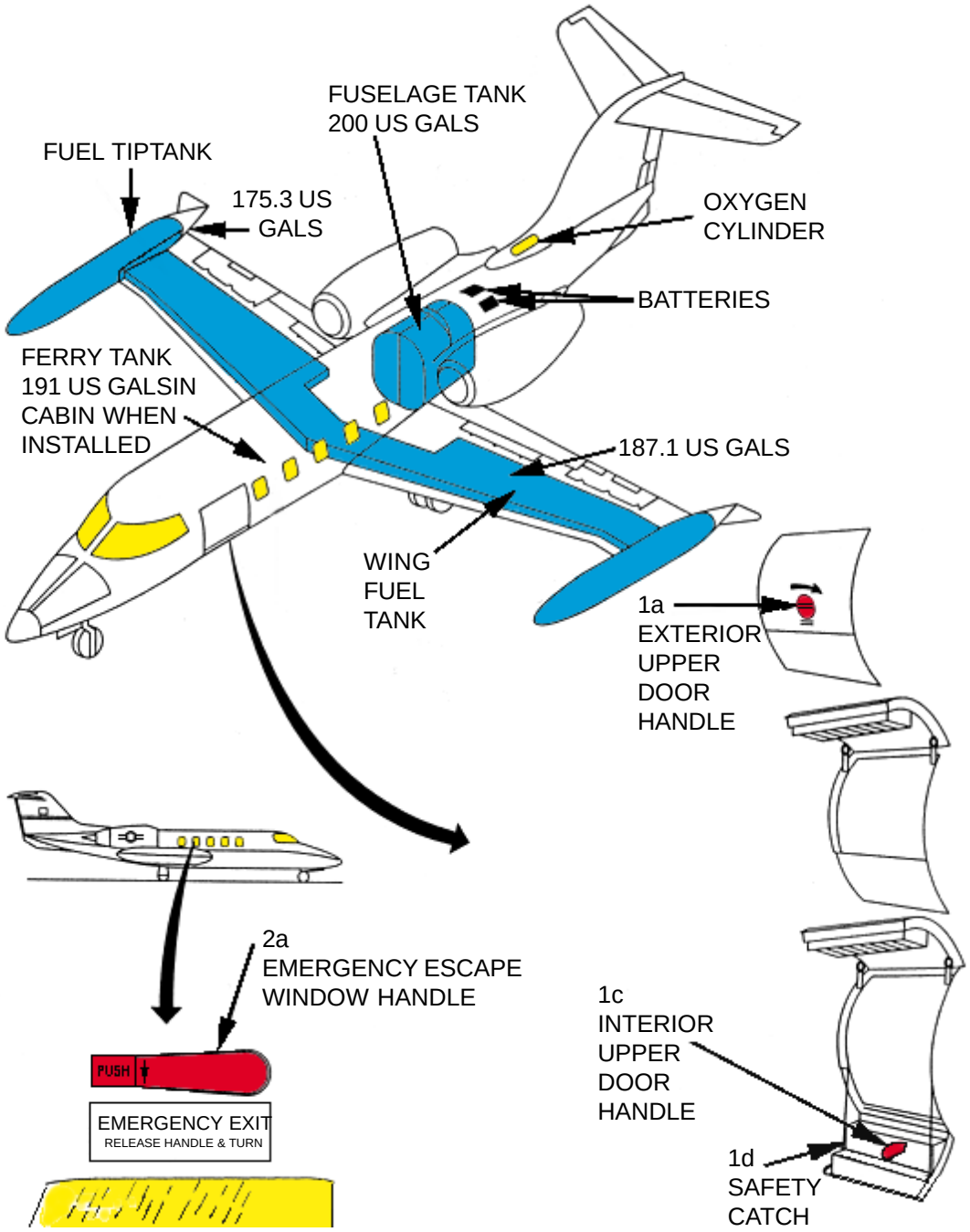

ENGINE SHUTDOWN AND AIRCREW EXTRACTION

1. ENGINE SHUTDOWN

a. Simultaneously lift locking mechanism and pull Thrust Levers AFT into the cut-off position.

b. Pull Engine Fire T-Handles, located on upper portion of pilot's instrument panel.

c. Place battery (2) switches, located on lower left of pilot's instrument panel, to the OFF position.

2. AIRCREW EXTRACTION

a. Unlatch lap belts and remove shoulder harness from crewmember(s).

NOTE:
Passenger seats are equipped with lap belts only.

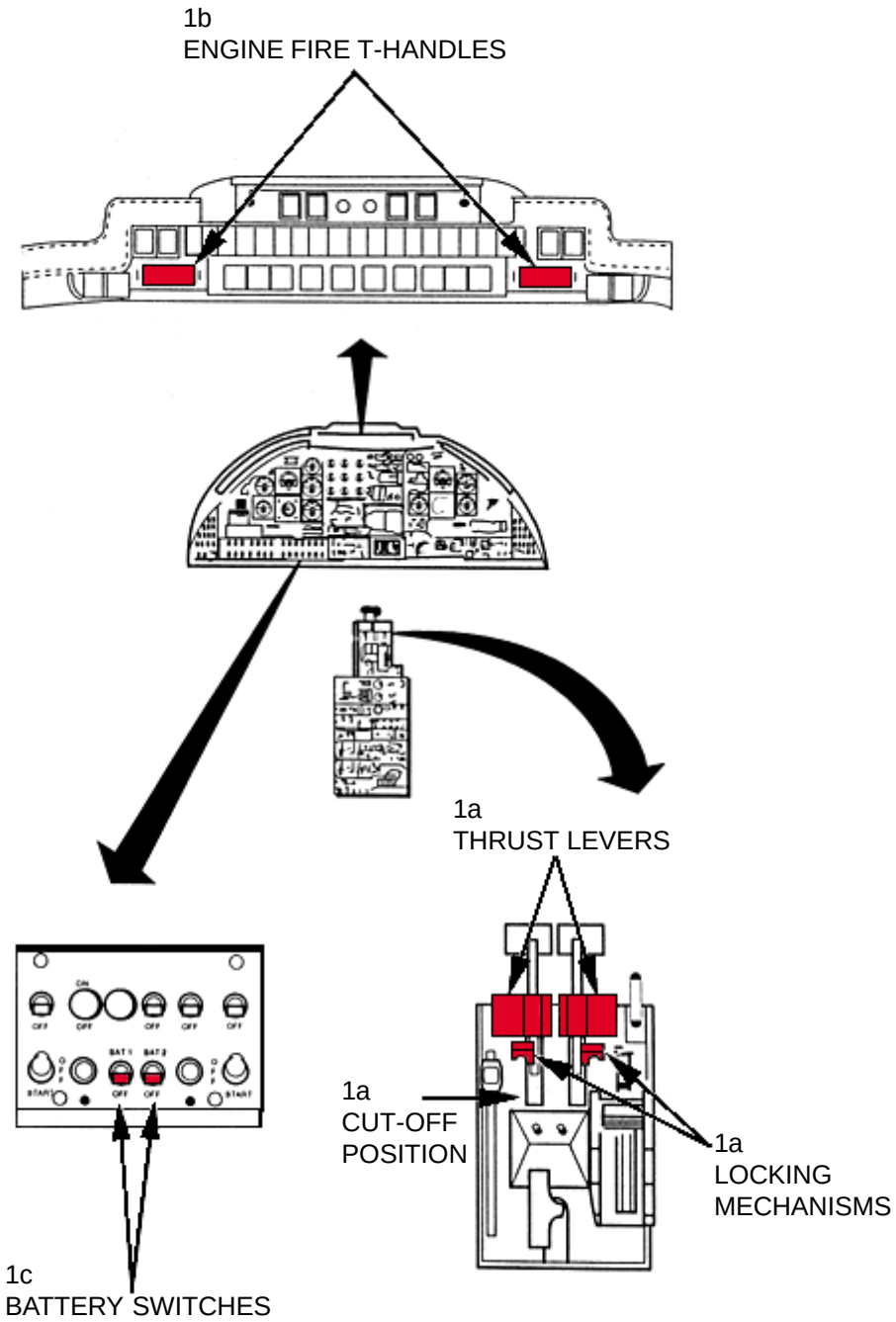

AIRCRAFT DANGER AREAS

JT8D TURBOFAN ENGINE HAZARD AREAS
AT IDLE THRUST

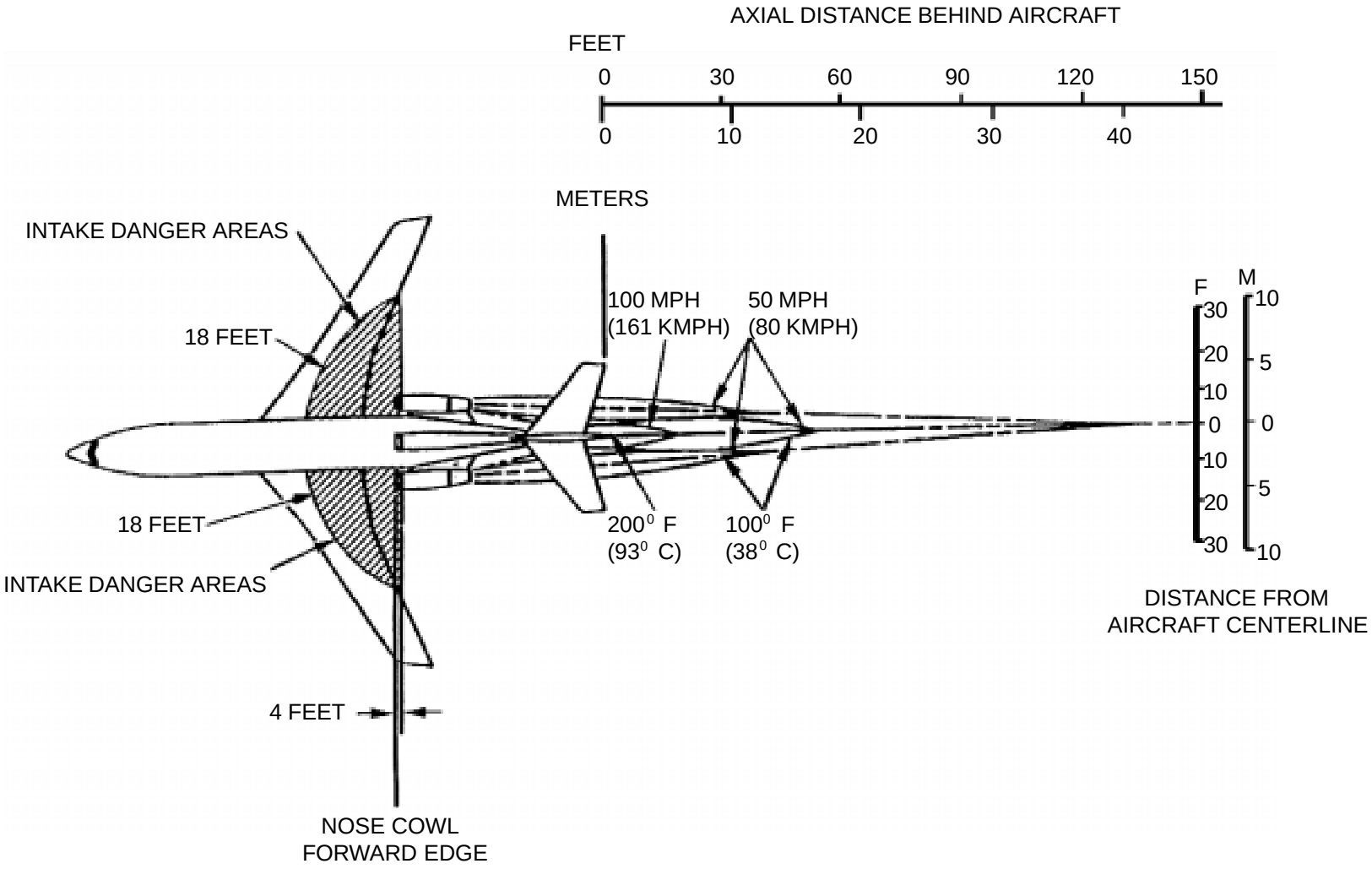

AIRCRAFT DANGER AREAS-Continued

JT8D TURBOFAN ENGINE HAZARD AREAS
AT TAKEOFF THRUST

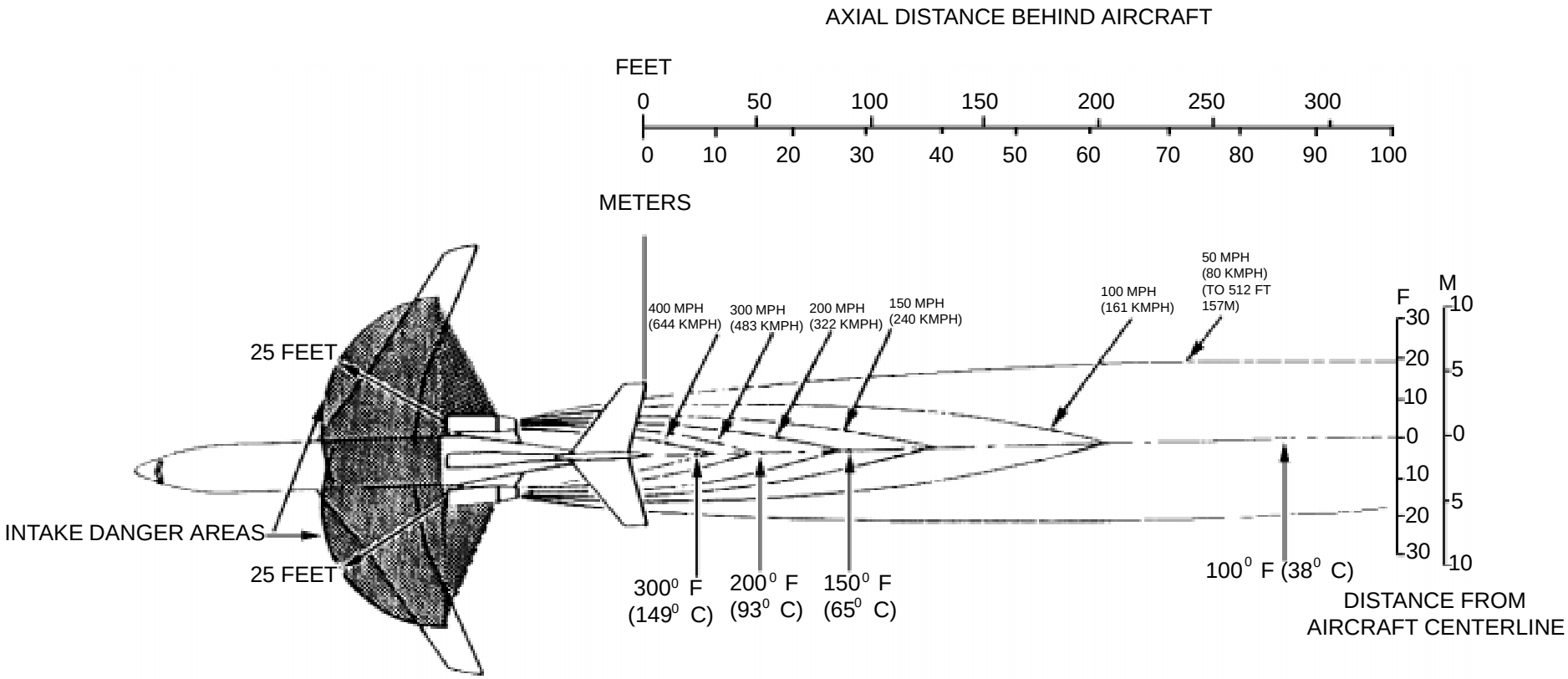

AIRCRAFT DANGER AREAS-Continued

WHEEL AND/OR BRAKE FIRES:
Wheels are equipped with fusible plugs designed to melt and deflate the tire when the temperature is excessive. Use of BCF (halon) is preferred if tires are pressurized. Dry chemical, fog, or foam are acceptable. If all tires are deflated, any fire extinguishing agent may be used. Cool down time for hot brakes is 40 minutes minimum.

WARNING

Approach landing gear from forward or aft of wheel when fighting a wheel fire as wheels and tires may explode.

NOTE:

- Radar systems are not normally operated during ground operations of the aircraft. Be aware that radar may be running during an emergency, but does not pose a threat if exposure is minimal.
- The APU is located between the left and right wheel wells. The intake is in the LH wheel well and the exhaust is in the top rear wing root area of the right wing.
- The main and APU batteries are located in the pressurized electronic equipment compartment access door. The battery is equipped with a 115 degree F. temperature switch. Disconnect the battery cable by loosening the hand knob and lifting the plug off of the terminals.

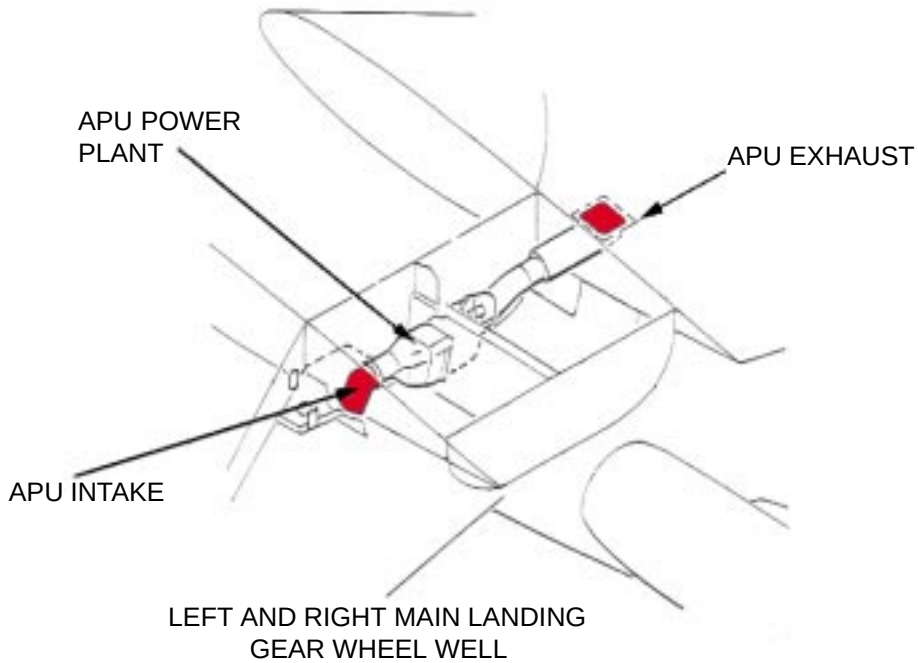

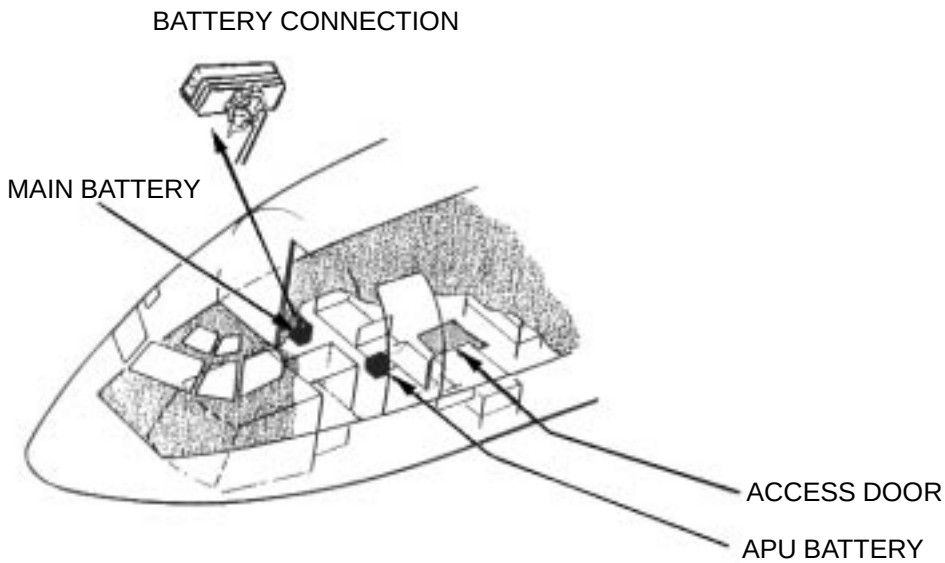

AIRCRAFT FLAMMABLE MATERIAL

NOTE:

Crew and passenger oxygen bottles are located in the forward baggage compartment just aft of the door. Each bottle has a shutoff valve located on the top of the bottle.

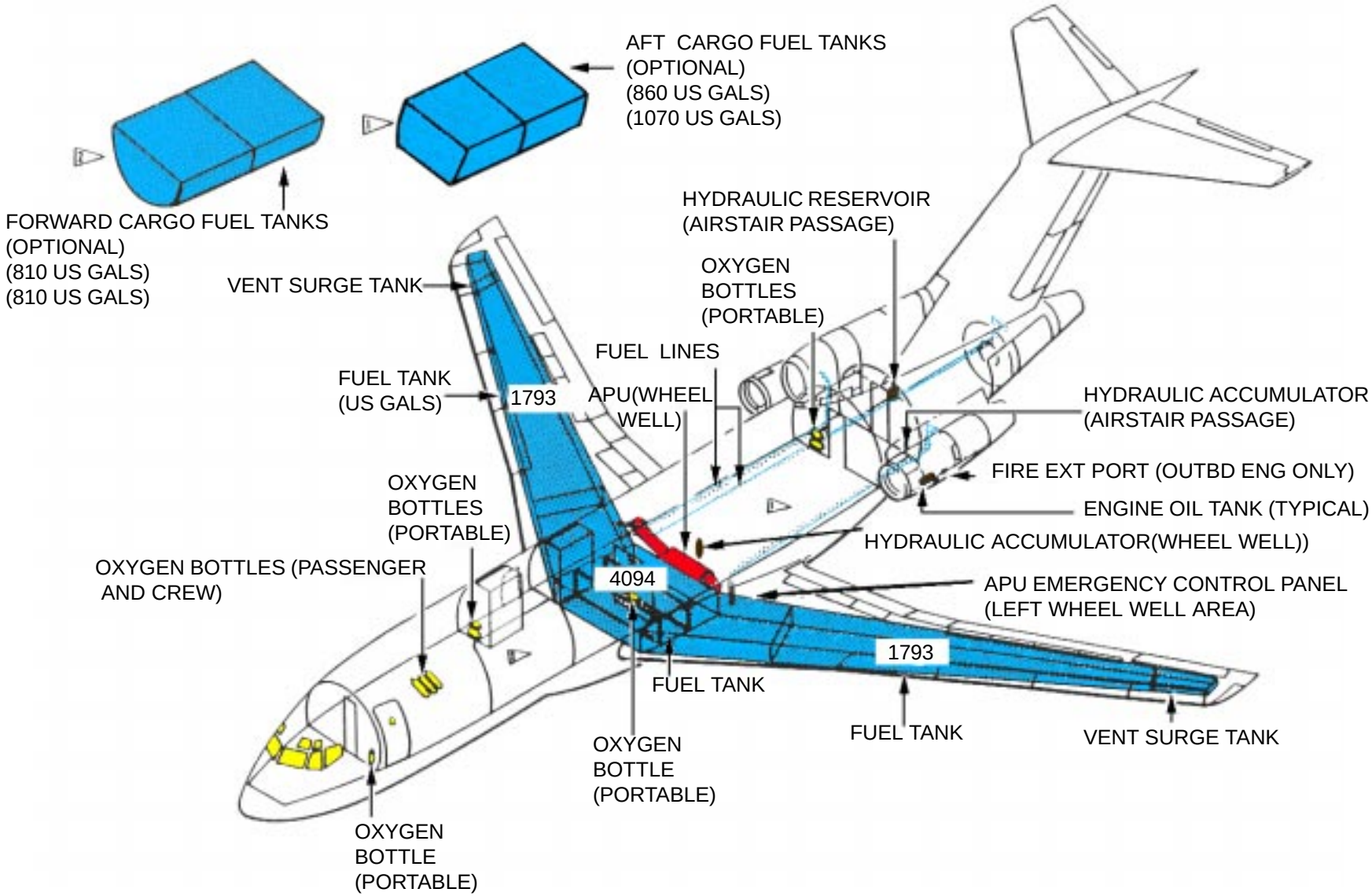

AIRCRAFT EMERGENCY RESCUE ACCESS

NOTE:

The C-22B is a Boeing 727-100 airframe. Model differences for the 100, 200 and 200F are depicted.

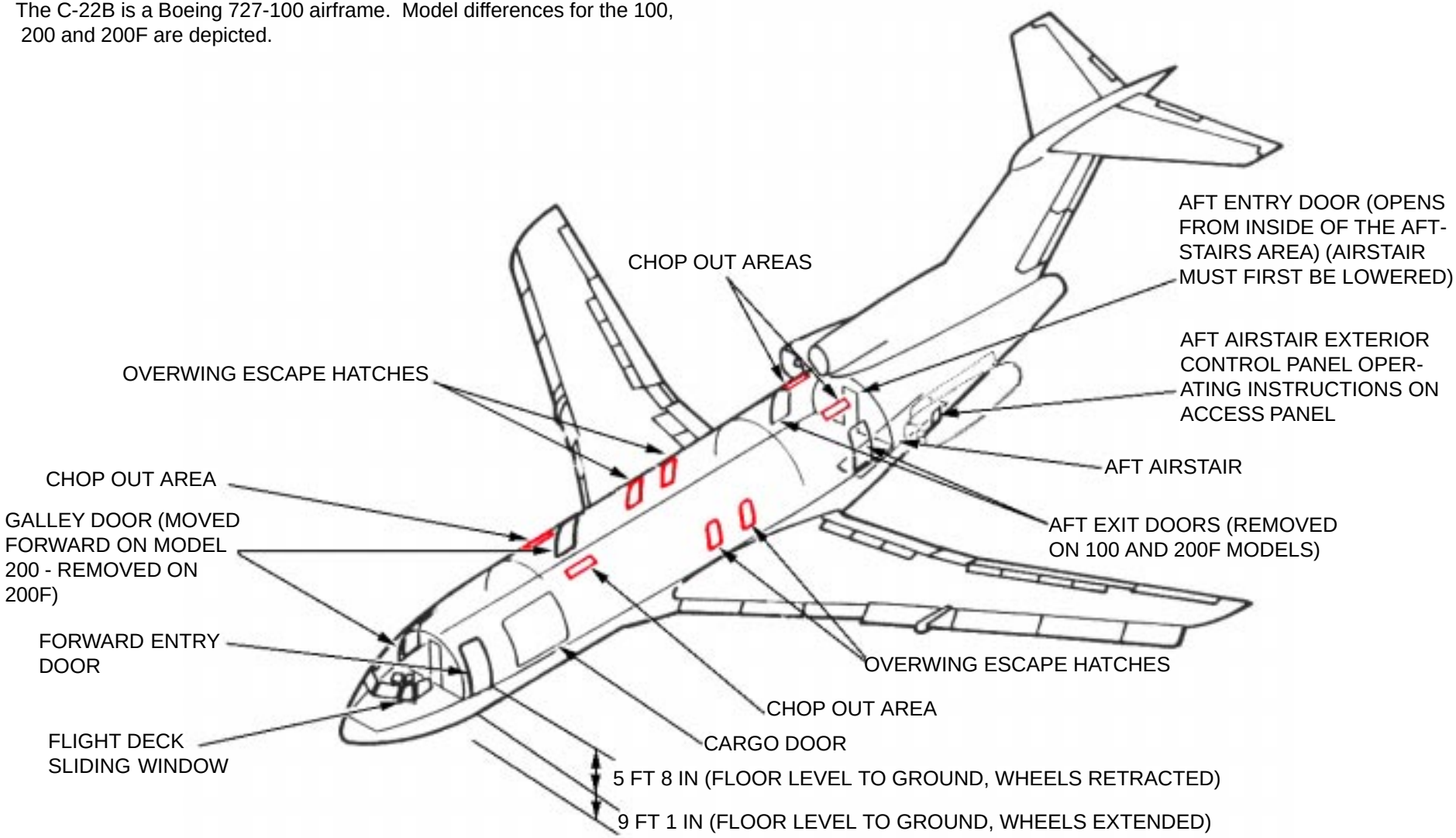

AIRCRAFT EMERGENCY AND SAFETY EQUIPMENT

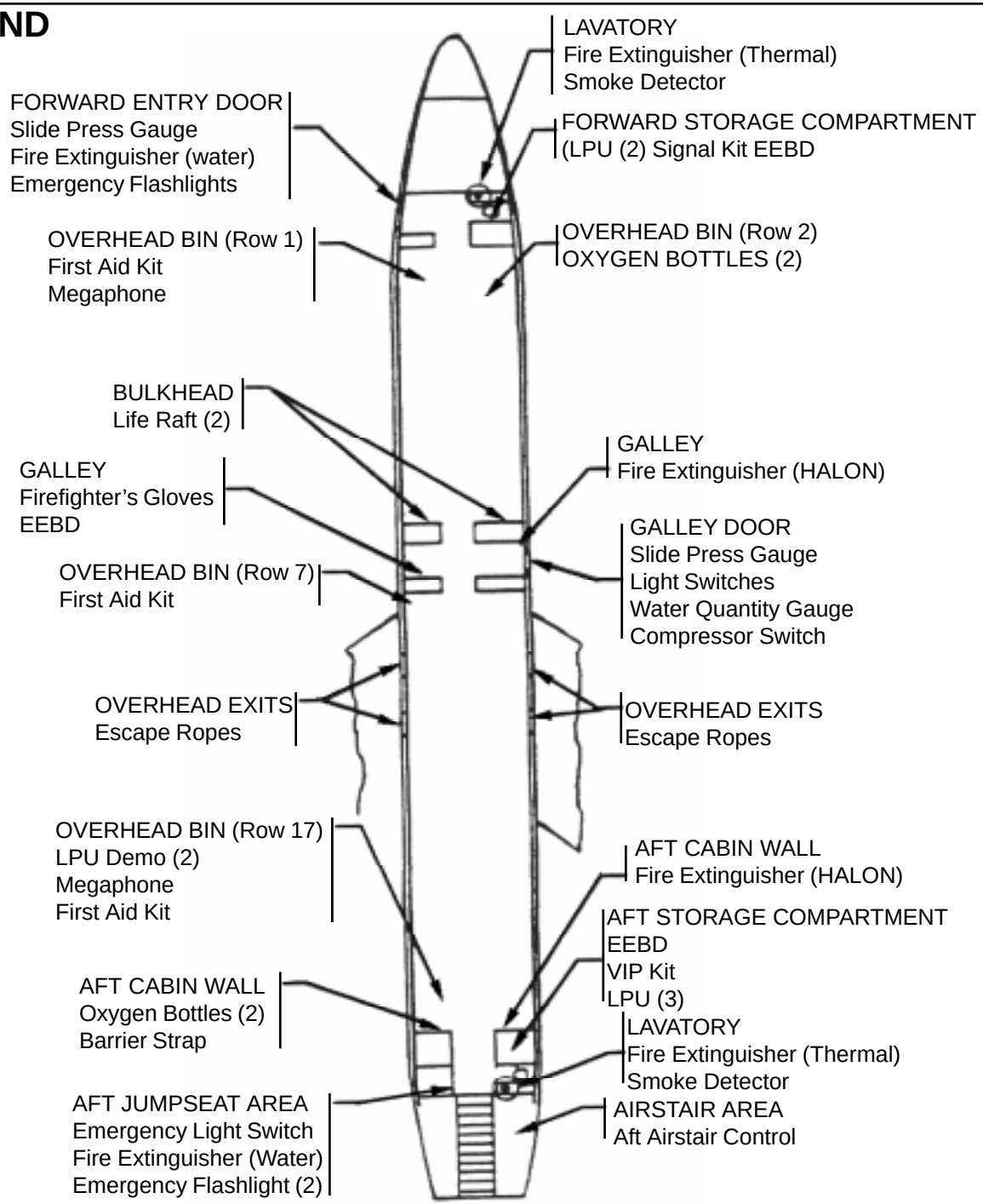

SKIN PENETRATION POINTS

NOTE:
The C-22B is a 727-100 model.

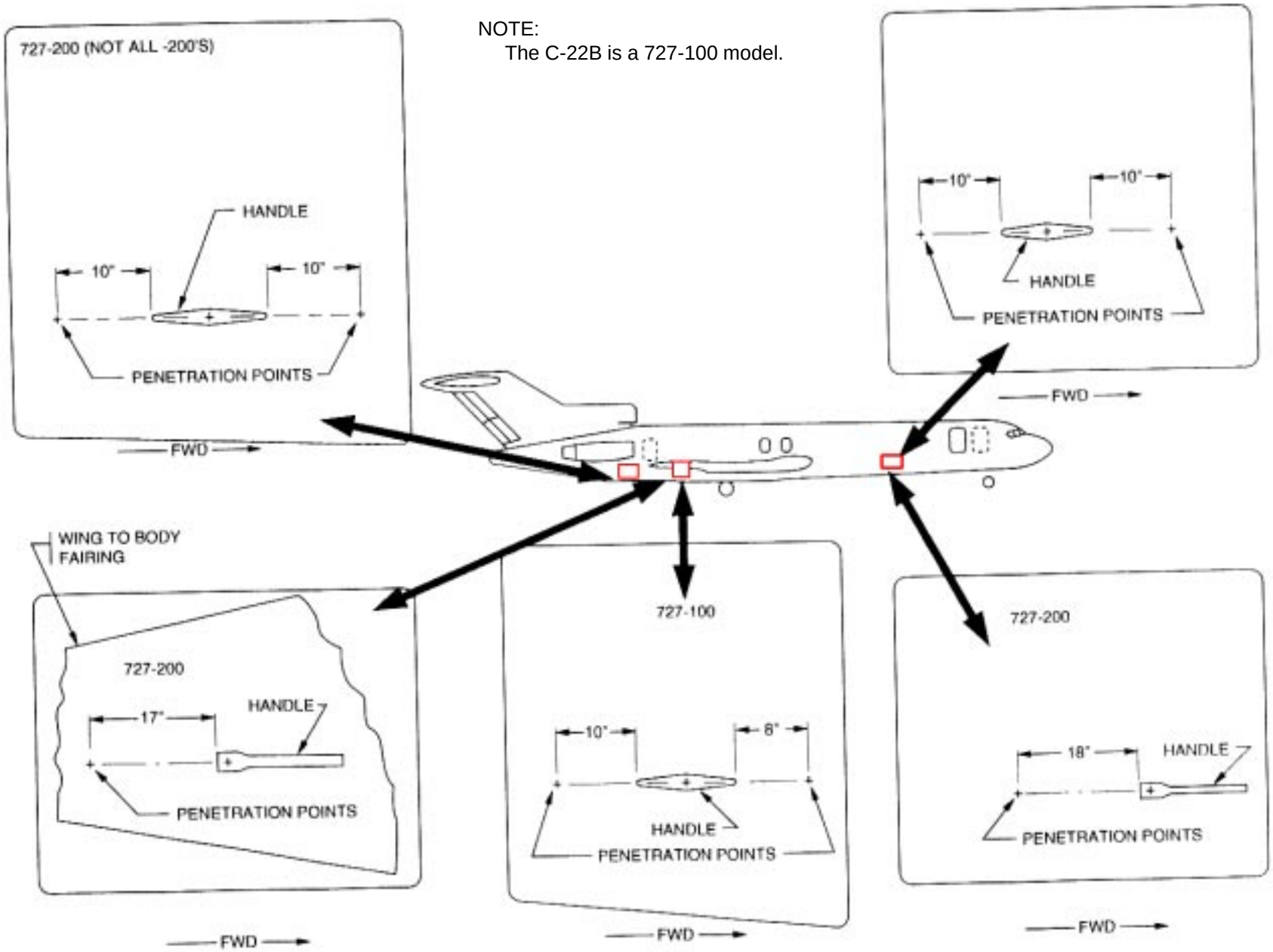

SKIN PENETRATION POINTS-Continued

ENGINE PENETRATION POINTS

- LEFT SIDE OF ENGINE
- RIGHT SIDE OF ENGINE

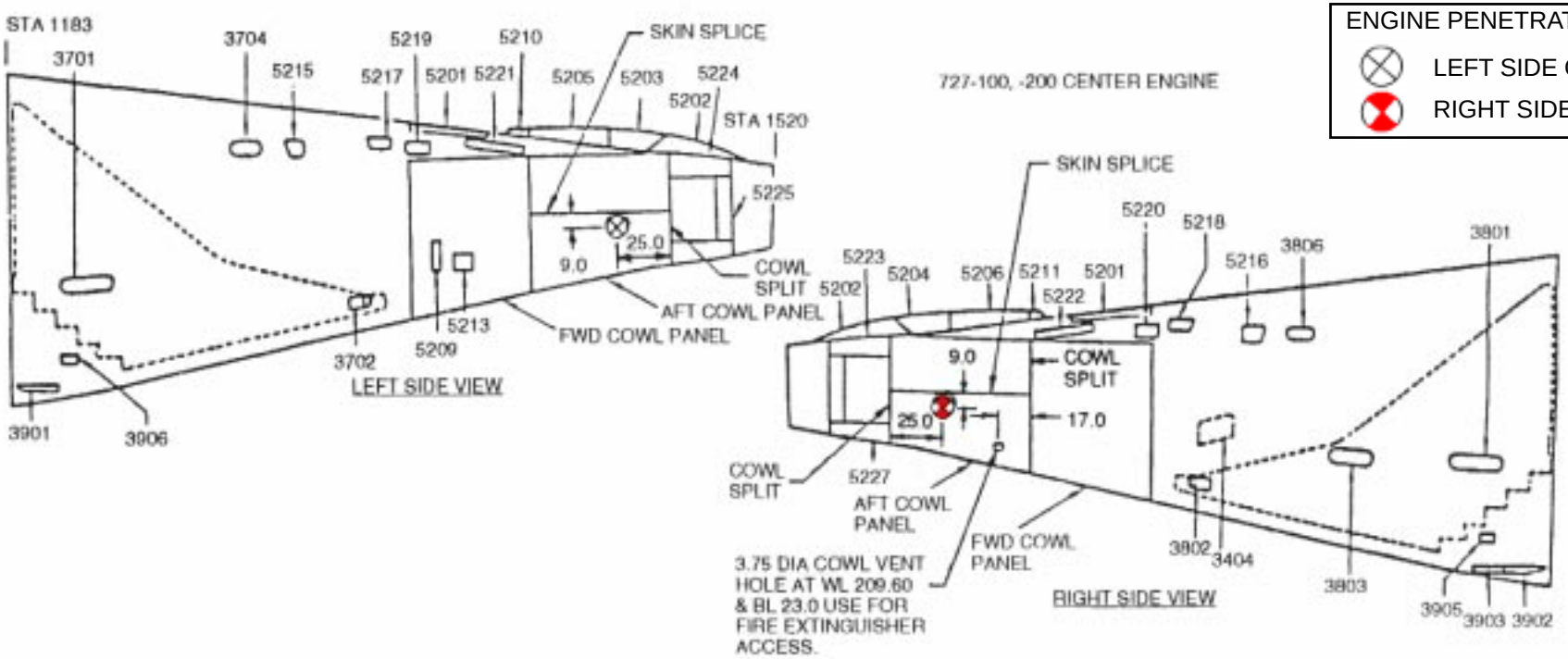

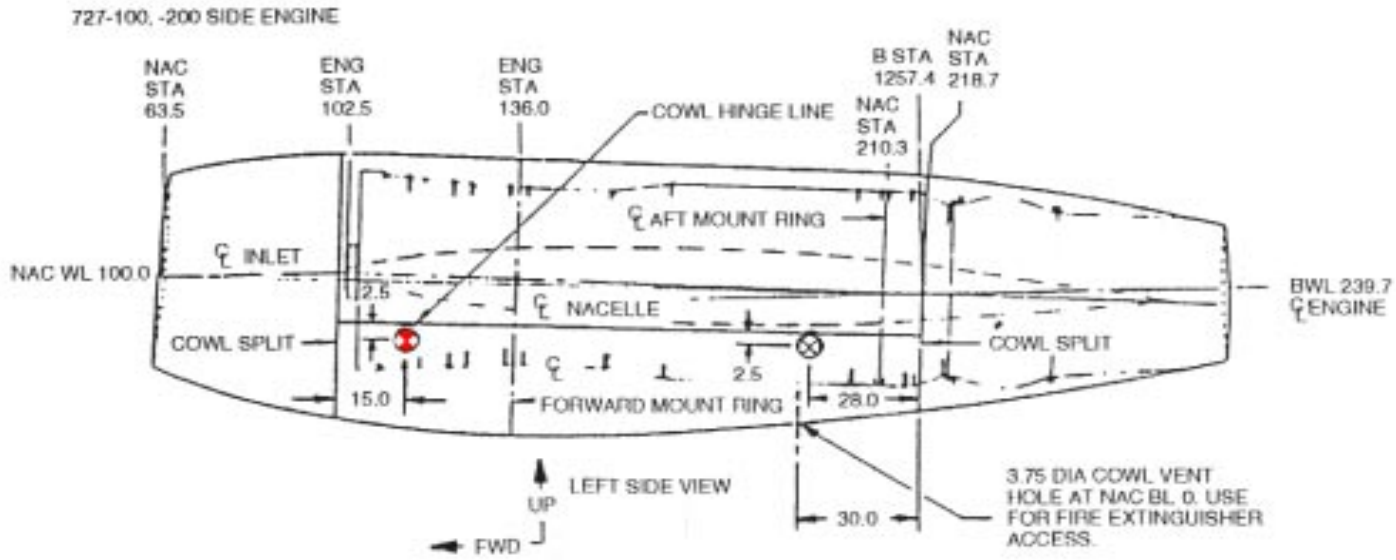

SPECIAL TOOLS/EQUIPMENT
Power Rescue Saw
12 Foot Ladder
Fire Drill II

Aircraft Dimensions
Length 153' 2"
Wing span 108' 0"
Height 34' 0"

AIRCRAFT ENTRY

1. NORMAL ENTRY

WARNING

If Forward Entry Door is used for rescue, passenger escape chute-slide will be actuated if not disconnected from inside.

a. RIGHT FORWARD ENTRY DOOR - Pull handle outward, rotate clockwise and pull door outward to open position.

2. EMERGENCY ENTRY

a. OVERWING ESCAPE HATCHES - Push panel in, located top center of hatches, and push hatches inward and up.

b. FORWARD ENTRY DOOR - Pull external handle, located on entry door, outward; rotate clockwise and pull door out to open position.

c. MID GALLEY DOOR - Pull external handle, located on galley door right forward side outward; rotate counterclockwise and pull door out to open position.

d. AFT EXIT DOORS - Pull lower end of handle, located top center of door left side of fuselage, outward; rotate clock wise and pull door outward. (Turn handle counterclockwise on doors located on right ride of fuselage.)

e. AIRSTAIR ENTRY DOOR - Depress latch on access door, located right side aft fuselage, and pull handle down to release stairway. (Stairway can jack aircraft up for passen-
ger escape in a no-gear situation.)

f. AFT ENTRY DOOR - Rotate handle, located on aft entry door, clockwise and push door inward.

3. CUT-IN

a. Cut tenth window aft from crew compartment and fifth window forward from tail section as last resort.

NOTE:
Oxygen, rafts, flashlights, and fire extinguishers are located in overhead compartments.

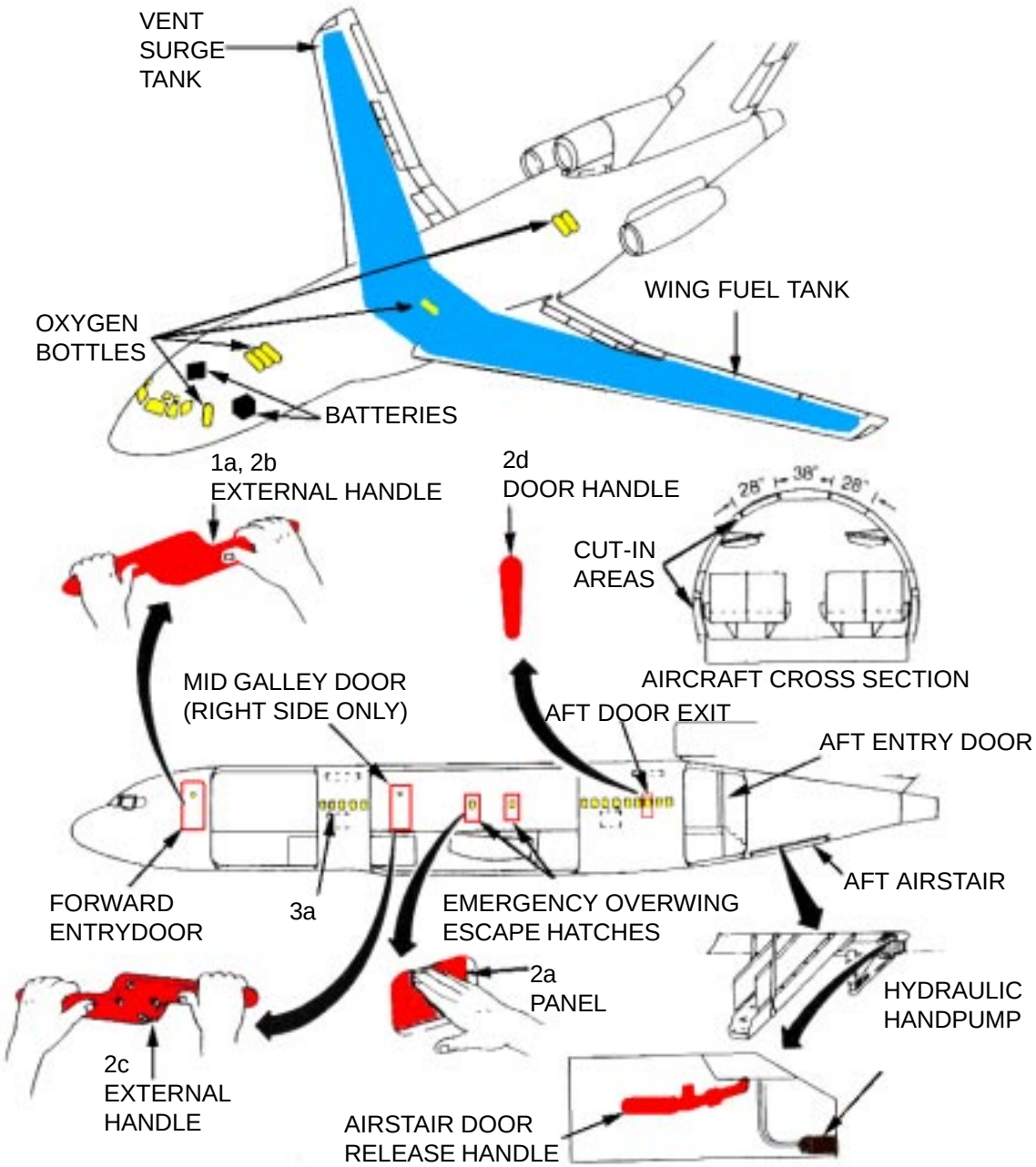

ENGINE AND APU SHUTDOWN

1. ENGINE AND APU SHUTDOWN

a. Retard throttles or thrust levers, located on pilot's center console, to the CLOSED position.

b. Restart start levers, located on pilot's center console, to IDLE CUTOFF position.

c. In case of engine fire, pull engine fire T-handle, located on center ceiling control panel or on pilot's light shield, for appropriate engine. Activate discharge switches as necessary.

d. In case of APU fire, pull APU fire switch located on rear flight deck wall. Activate discharge switch as necessary.

e. Place Master Switch, located on rear flight deck wall, down to OFF position.

f. Locate Battery Switch, located on upper left flight engineer's panel, lift switch guard up and place switch in OFF position.

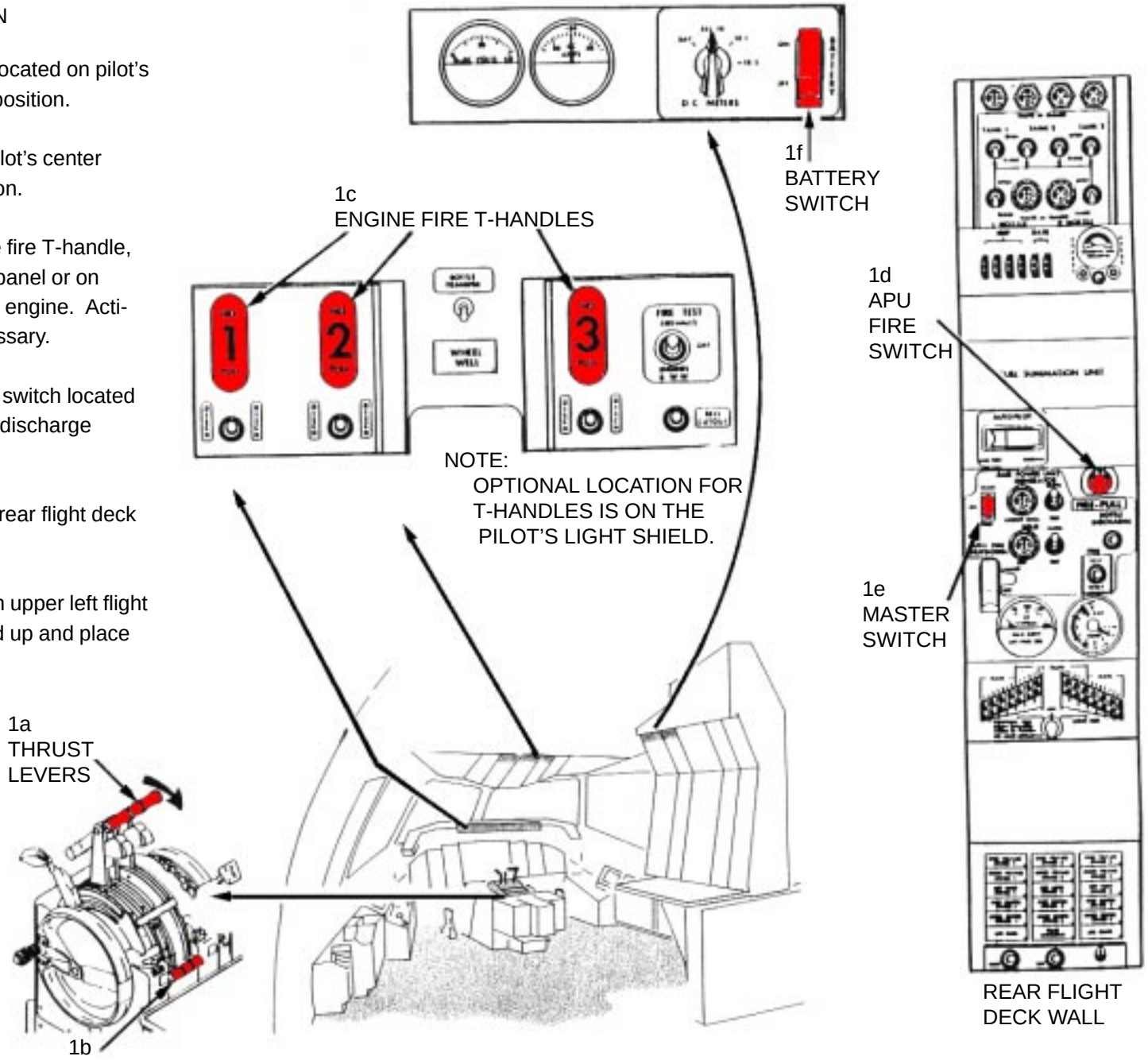

AIRCREW EXTRACTION

2. AIRCREW EXTRACTION

NOTE:
If seat tracks are not damaged during crash landing, use adjustable seat control handles to retract seats to aft position. Third crewmember may have to be extracted first to make room for the pilot and co-pilot seat adjustments.

a. Unlatch lap belt and remove shoulder harness from pilot and co-pilot by rotating the rotary buckle.

b. For easier extraction, use seat adjustments for fore and aft, vertical, recline, and inside armrest.

c. Unlatch lap belt and remove shoulder harness from flight engineer or third crewmember by rotating the rotary buckle.

d. For easier extraction, use seat adjustments for fore and aft, vertical, and swivel for facing positions. Depress swivel seat control handle and rotate seat clockwise so that crewmember faces aft.

e. Passenger seats are equipped with lap belts only.

NOTE:
Co-pilot's seat controls located opposite.

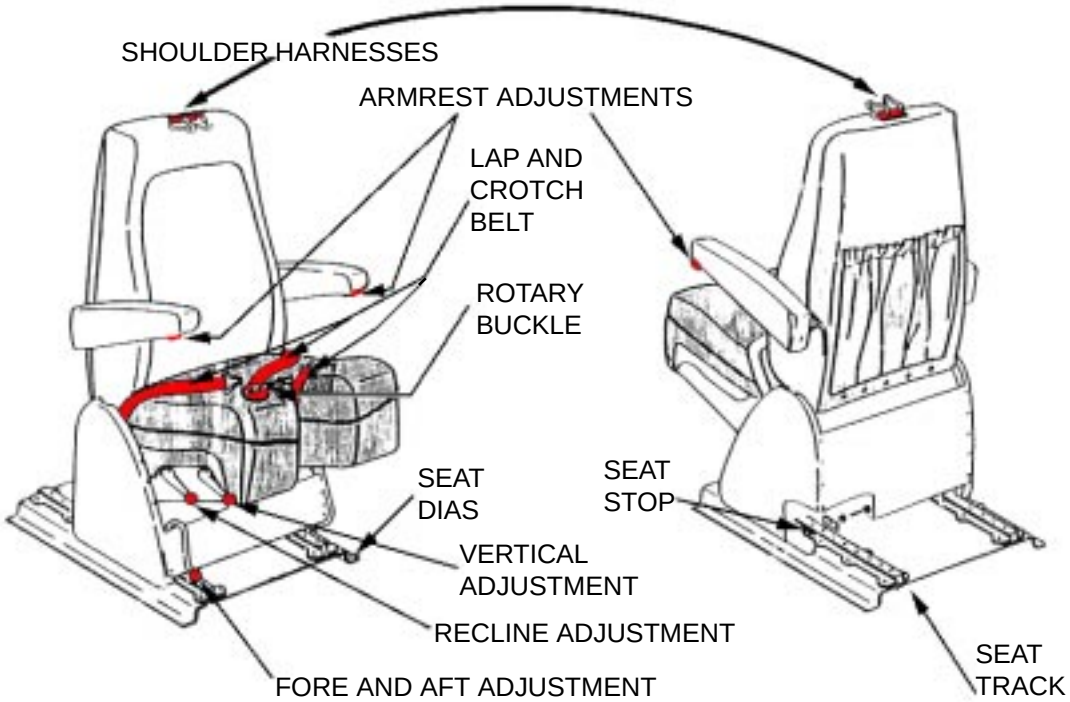

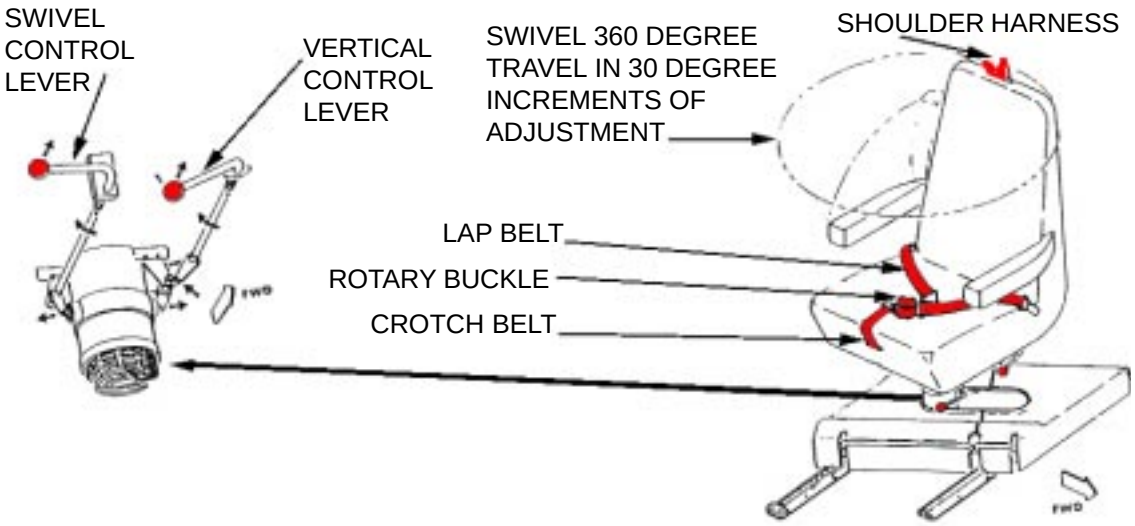

SKIN PENETRATION POINTS

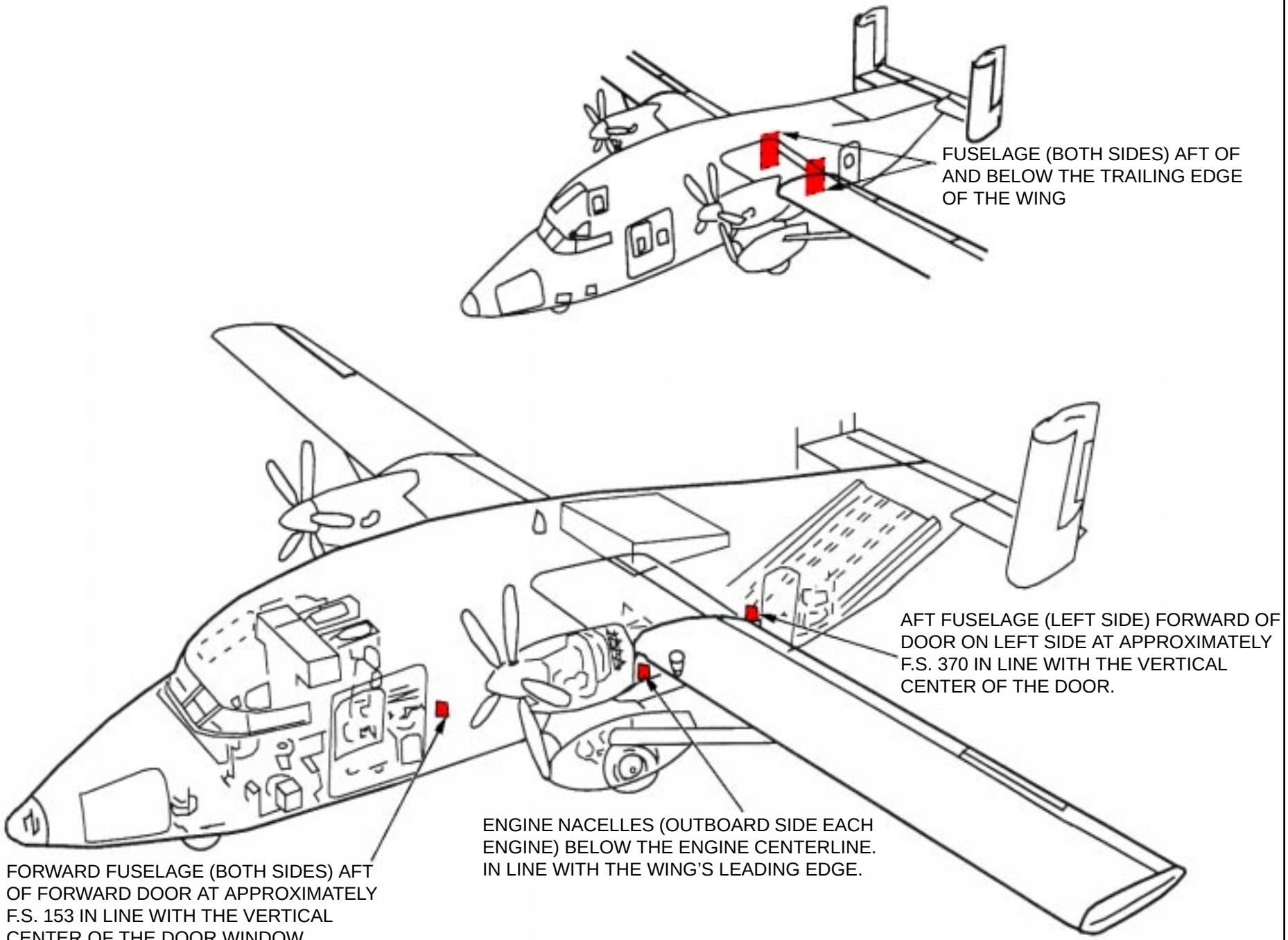

SPECIAL TOOLS/EQUIPMENT
Power Rescue Saw
14 Foot Ladder
Fire Drill II

AIRCRAFT ENTRY

1. NORMAL ENTRY

a. Turn handle on main cabin entry door clockwise and pull to open.

b. Turn handle on forward cargo loading door clockwise and pull to open.

2. EMERGENCY ENTRY

a. Turn handle on any of two forward emergency exits left and right clockwise and pull to open.

b. Turn handle on flight compartment emergency exit clockwise and pull to jettison.

c. Turn handle on main cabin entry door clockwise and pull to open.

d. Turn handle on forward cargo loading door clockwise and pull to open.

3. CUT-IN

a. Cut-in area each fuselage side aft of wing.

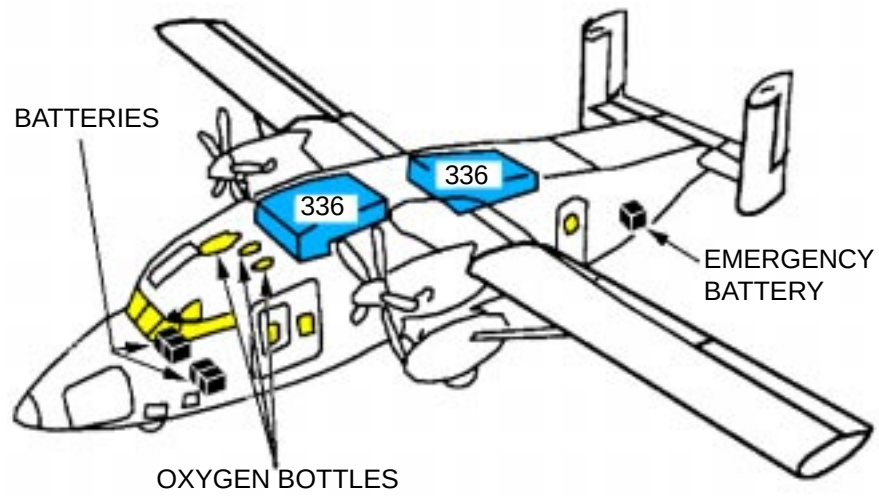

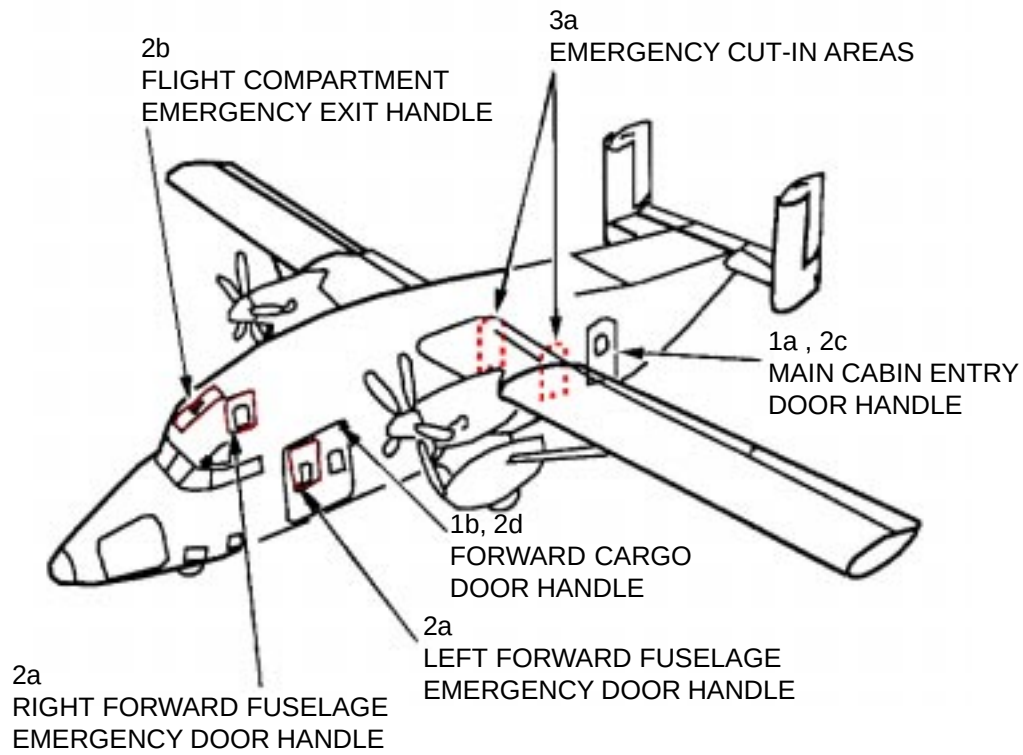

ENGINE SHUTDOWN AND AIRCREW EXTRACTION

1. ENGINE SHUTDOWN

a. Retard fuel levers, located on center console, to OFF position.

b. Retard LP valve levers, located in overhead console, to SHUT position.

c. If fire buttons are illuminated or if there is evidence of fire in the vicinity of the engines, actuate the Fire Extinguisher Push Buttons located in the center overhead engine services panel.

d. Place electrical master switch, located left overhead electrical switch panel, to OFF position.

2. AIRCREW EXTRACTION

a. Unlatch lap belts and remove shoulder harness from crewmembers.

NOTE:
Passenger seats are equipped with lap belts only.

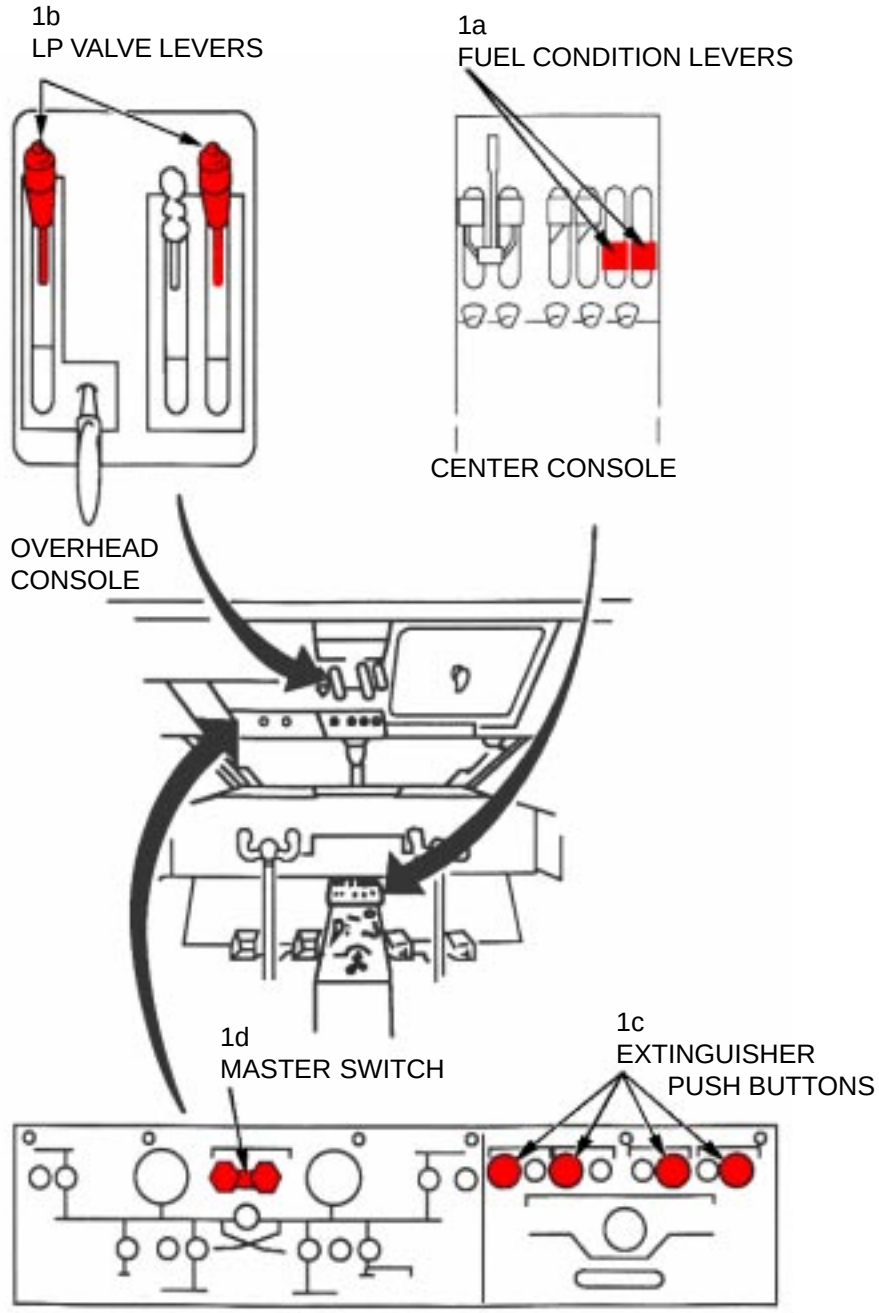

LEFT OVERHEAD ELECTRICAL SWITCH PANEL

AIRCRAFT DIMENSIONS

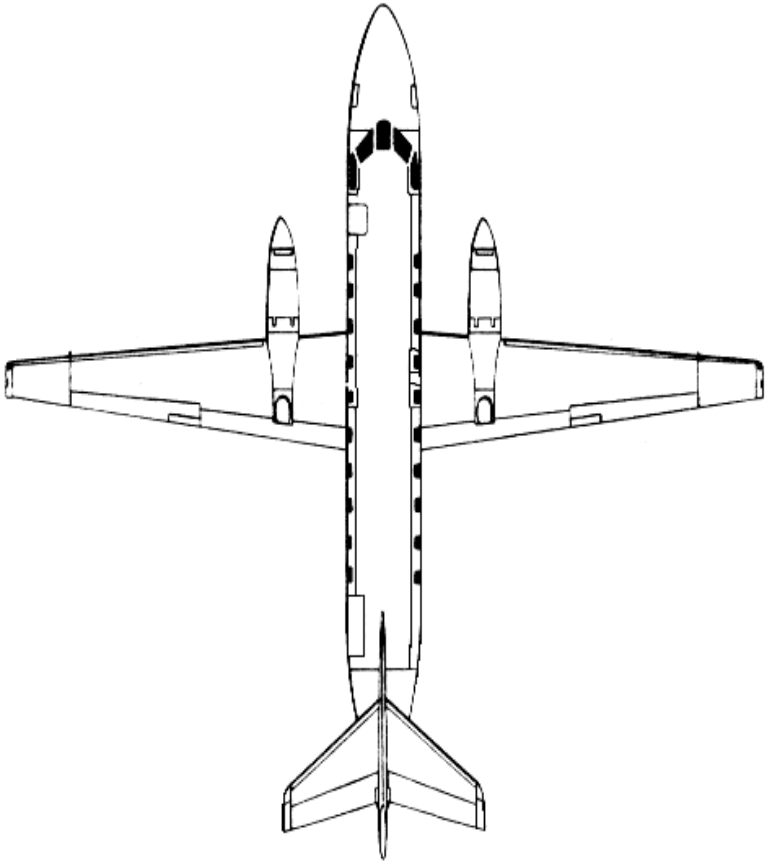

WING SPAN
57 FT 0 IN
(17.37M)

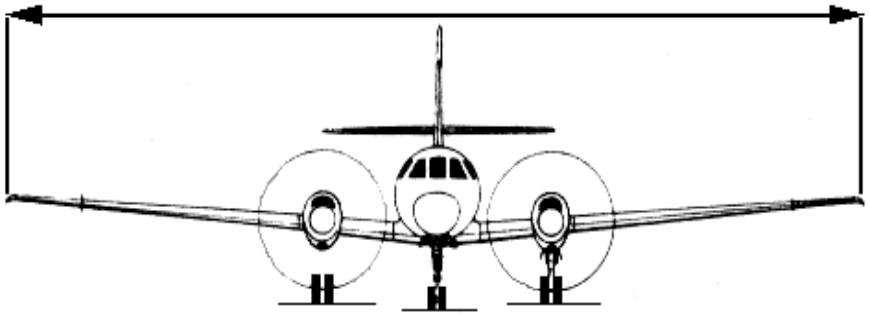

LENGTH
59 FT 4.25 IN
(18.09 M)

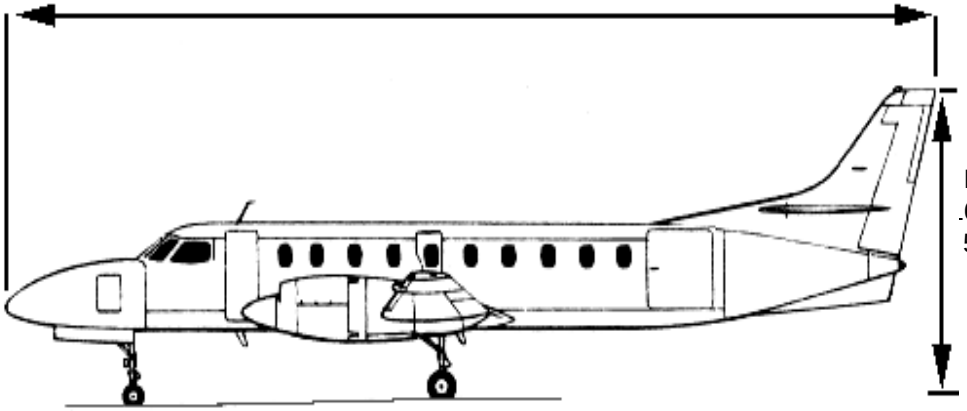

HEIGHT
.6 FT 8 IN
5.08 M)

AIRCRAFT HAZARDS

NOTE:

The C-26 is a joint service aircraft used by the USAF, US Army, US Navy, and State Department for drug interdiction.

ALCOHOL-WATER (AWI) FLUID MIXTURE

The C-26 (SA 227-DC model) uses an alcohol-water mixture composition (CAWI system) with a quantity of 14 US gallons or 54 liters. The mixture is Methyl Alcohol 40% and water 60%. Prior to flight the CAWI tank will be full. The interconnected storage tanks are located between the fuselage lower skin and the wing belly panel. Common plumbing is routed through each wing leading edge to each engine.

WARNING

Methyl Alcohol (Methanol) is a violent poison and can not be made non-poisonous. In case of accidental contact, flush with water immediately. Methanol vapors are toxic and extremely flammable. Do not smoke, generate sparks, or expose Methanol to open flame.

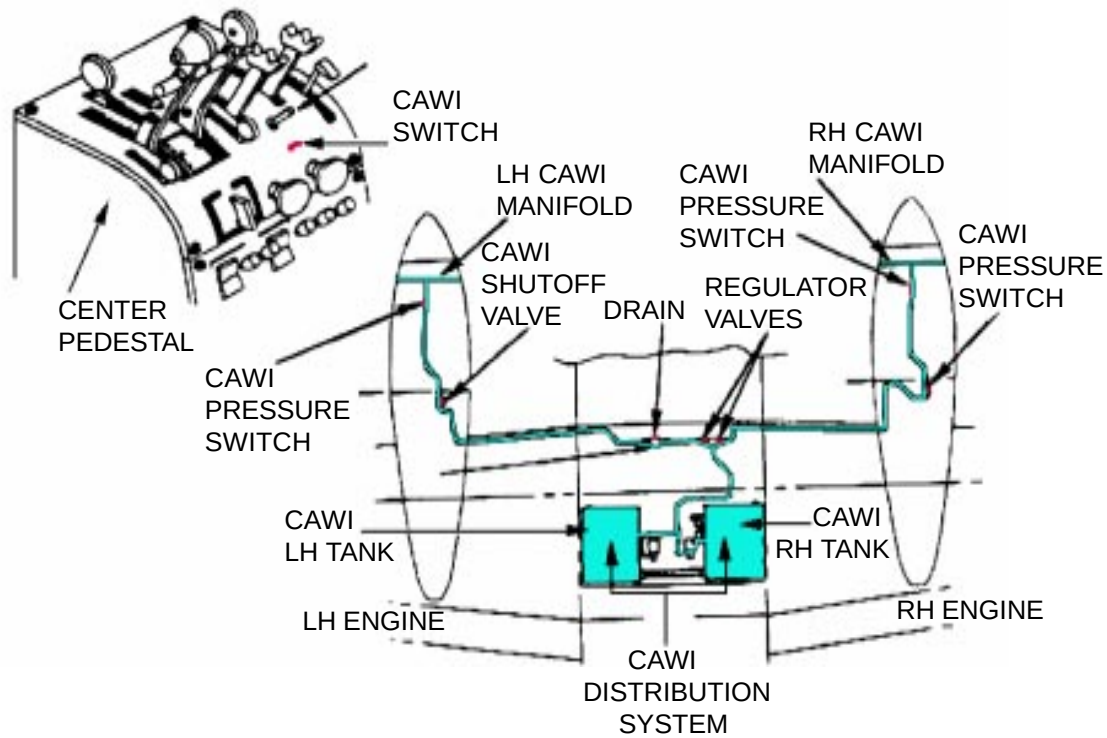

OXYGEN BOTTLE AND SHUTOFF VALVE LOCATION

The C-26 (SA 227-DC) contains one oxygen bottle located beneath the equipment rack aft of the aft cargo compartment bulkhead. Oxygen lines are routed to the pilot and co-pilot and along the right side of the fuselage to the passengers. A shut-off valve is located on each regulator.

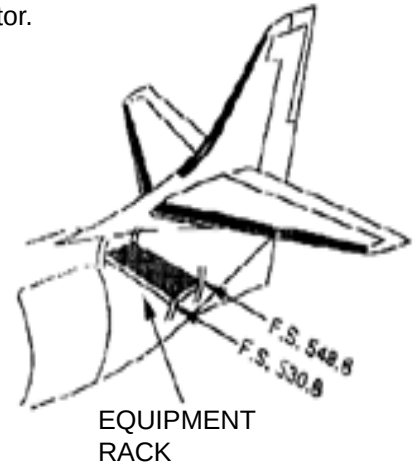

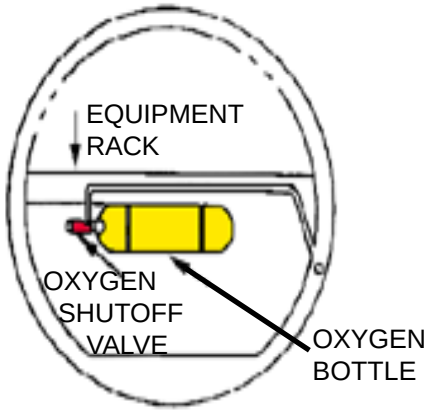

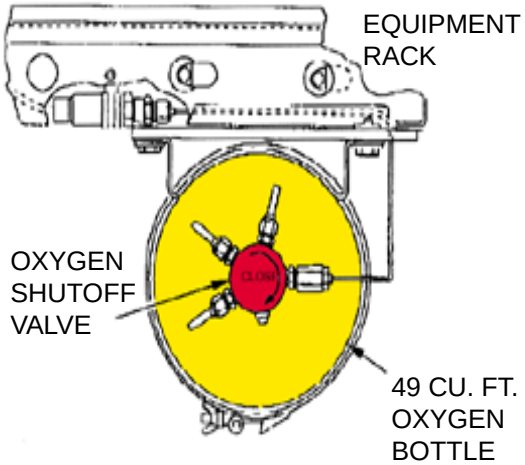

AIRCRAFT HAZARDS-Continued

1. BATTERY DISCONNECT

NOTE:
Aircraft is equipped with two 24 volt 23 Ah Ni/Cd batteries.

a. Remove battery access panels from upper surface of left and right inboard wing.

b. Disconnect main battery quick disconnect by turning battery disconnect knob counterclockwise.

c. Disconnect minor battery quick disconnects by turning connectors counterclockwise.

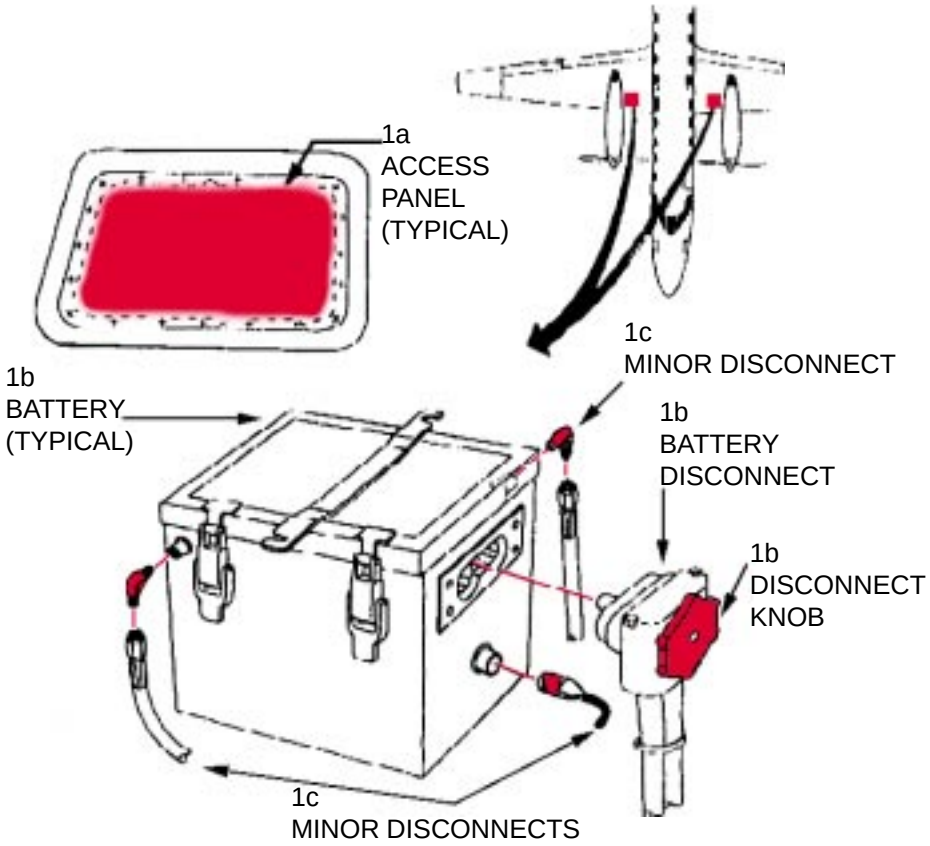

SPECIAL TOOLS/EQUIPMENT
Power Rescue Saw
6 Foot Ladder

AIRCRAFT ENTRY- SA226/227 MODELS

1. NORMAL/EMERGENCY ENTRY

a. Push in on forward end of entry door handle. Door is located on forward left side of aircraft.

b. Rotate entry door handle down, clockwise, to open.

c. Pull out on door handle. (Door is hinged at the bottom and will rotate out from the top).

2. CARGO DOOR AND PASSENGER BULKHEAD

a. The cargo door handle operates same as the forward entry door handle. Cargo door must be lifted up to open. Cargo door is located on aft left side of aircraft.

b. Optional bulkhead separates passenger compartment and cargo compartment. The bulkhead may be removable and may contain a door. Can also be used as an emergency entry and exit.

3. CUT-IN

a. Cut along window lines. There are no cut-in marks painted on the aircraft. The area 14 inches above and 3 inches below the window will offer the least resistance for forced entry.

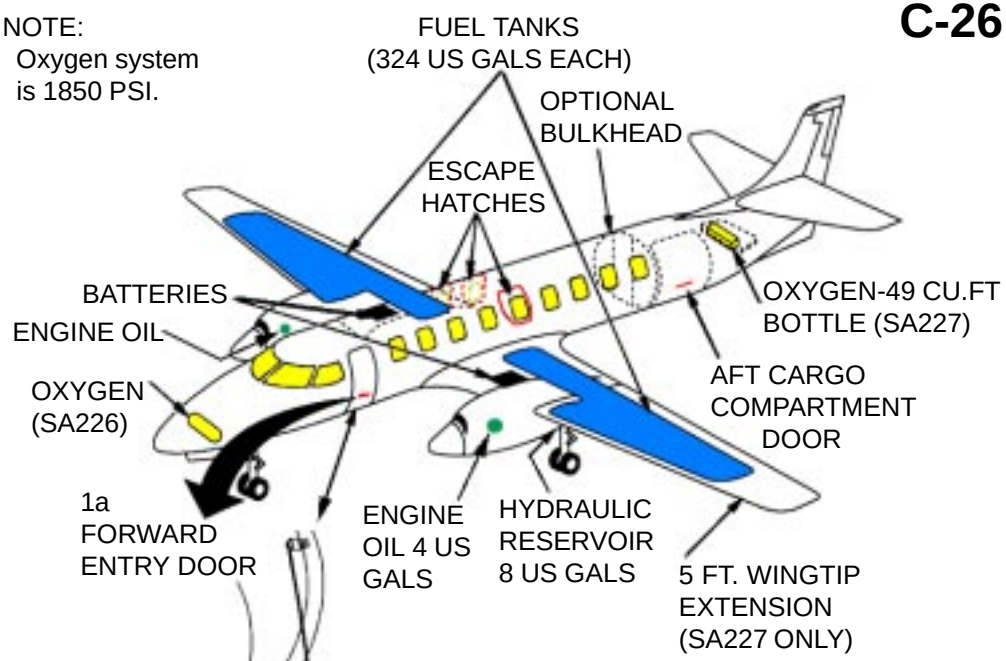

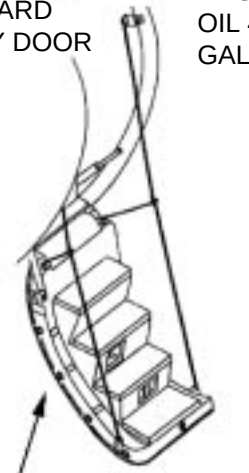

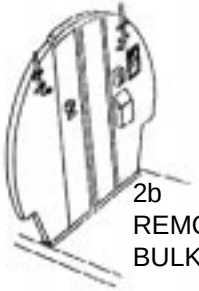

EMERGENCY EXITS AND PERSONNEL EGRESS

1. EMERGENCY EXITS

NOTE:

Escape hatches (windows) cannot be opened from outside the aircraft. Two hatches are located on the overwing right side and one hatch is located on the overwing left side of aircraft. Do not use as an entry.

a. Pull emergency handle, located above each emergency exit hatch window.

b. Pull hatch inward and place to the side or discard outside. Hatch opening can now serve as an exit for passengers and an entry point for rescue team members.

2. PERSONNEL EGRESS

NOTE:

Although not recognized by the FAA as an emergency exit, the cargo door (which can be opened from inside the aircraft) is available as an emergency exit.

WARNING

Do not use main entry door for emergency exit if left engine is still running. Personnel can walk into path of rotating propellers causing serious injury or death.

a. Pesonnel can egress through main entry doorway, and three emergency exits over the wings.

b. As an alternative, if time permits, remove the aft cargo compartment bulkhead or open cargo compartment door and open the cargo doorway and exit. Cargo/baggage may have to moved out of the way to exit.

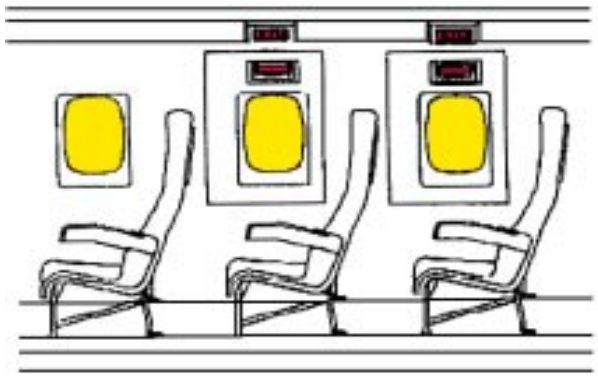

EMERGENCY EXIT HATCH WINDOWS
(RT SIDE VIEW)

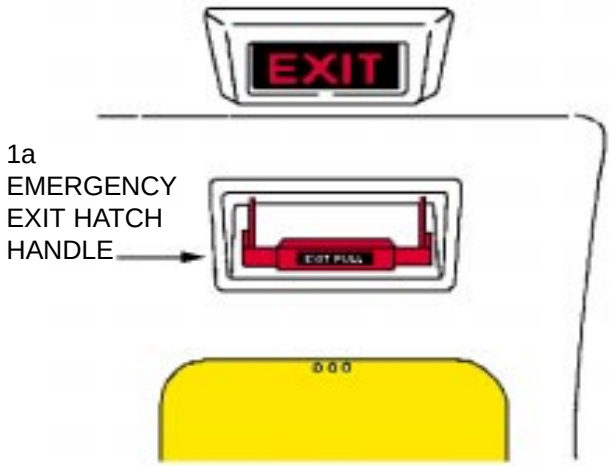

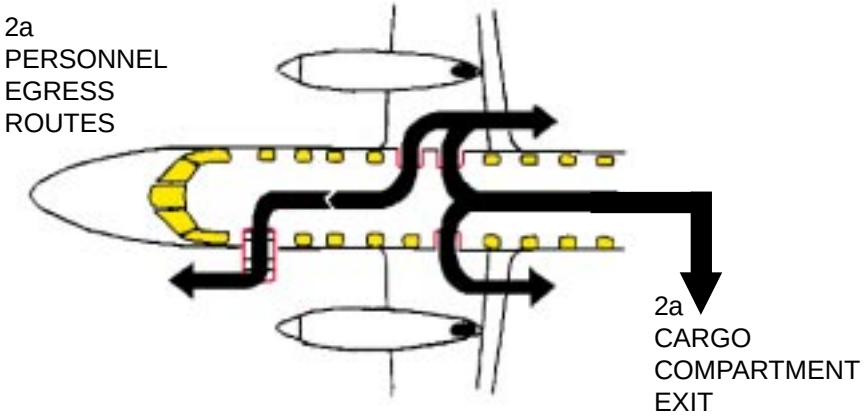

ENGINE SHUTDOWN

1. ENGINE SHUTDOWN

a. Ensure at least one battery switch is ON (forward position). Battery switches are located straight forward of pilot's control column.

b. Push stop buttons, located below left instrument panel. (Approx. 5 inches to right of battery switches.)

c. Place both battery switches to OFF (center) position.

d. Pull both engine stop and feather knobs, located on center pedestal just below engine controls, full aft. Controls are red.

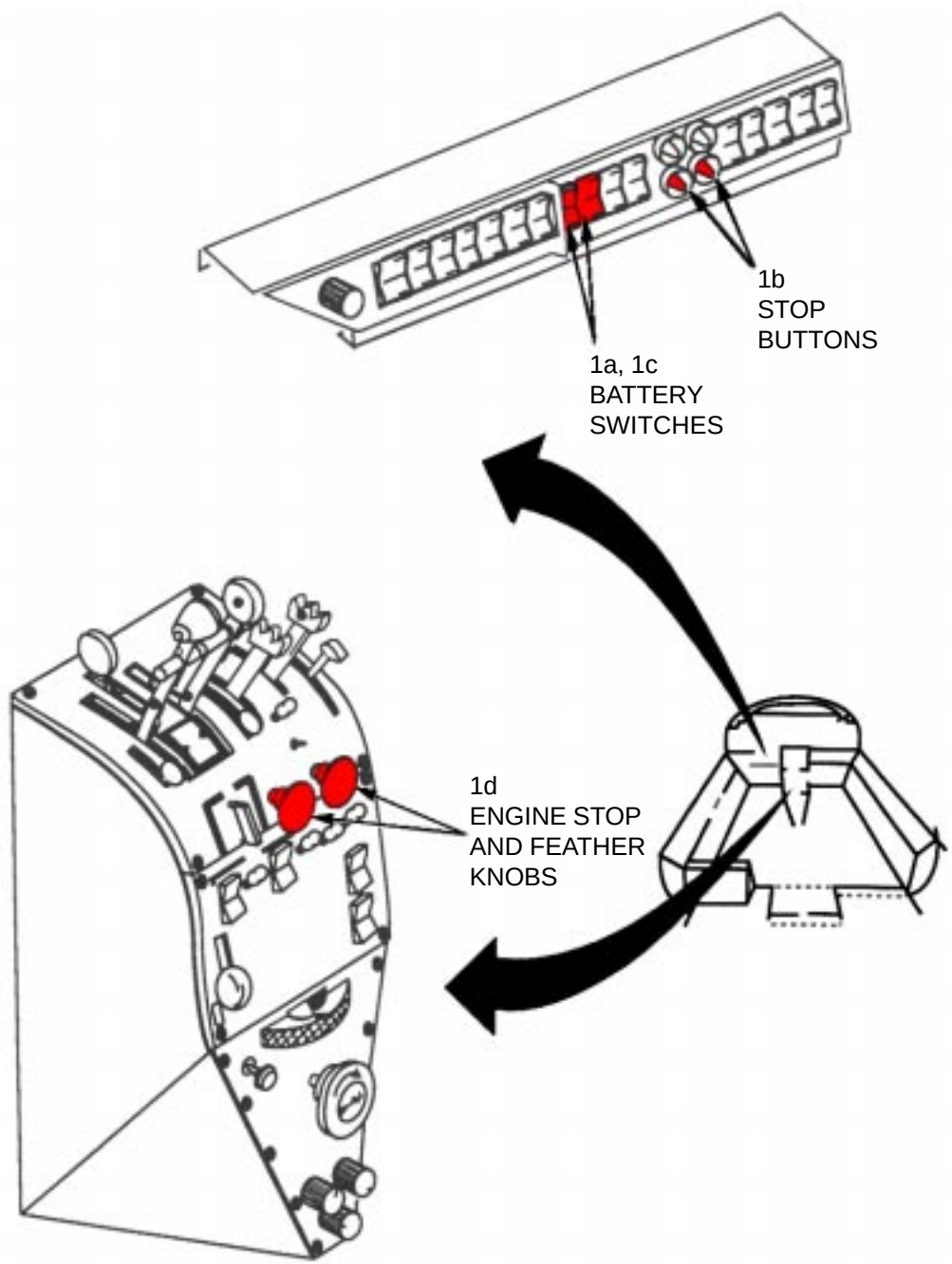

CABIN CONFIGURATION AND AIRCREW EXTRACTION

1. CABIN CONFIGURATION

a. C-26A typical interior cabin configuration and arrangement. Accomodation: flight deck: 2, passenger compartment: 18.

2. AIRCREW EXTRACTION

NOTE:
Crew seat armrests can be lowered by depressing a latch under the arm rest.

a. Unlatch pilot and co-pilot lap belts and shoulder harness (es)

b. Unlatch passenger lap belts.

NOTE:
If seat tracks are not damaged due to crash, seat adjustment levers, located inboard of each seat at floor level, can be used to retract seat to full aft position. Passenger seats may or may not be equipped with shoulder harnesses.

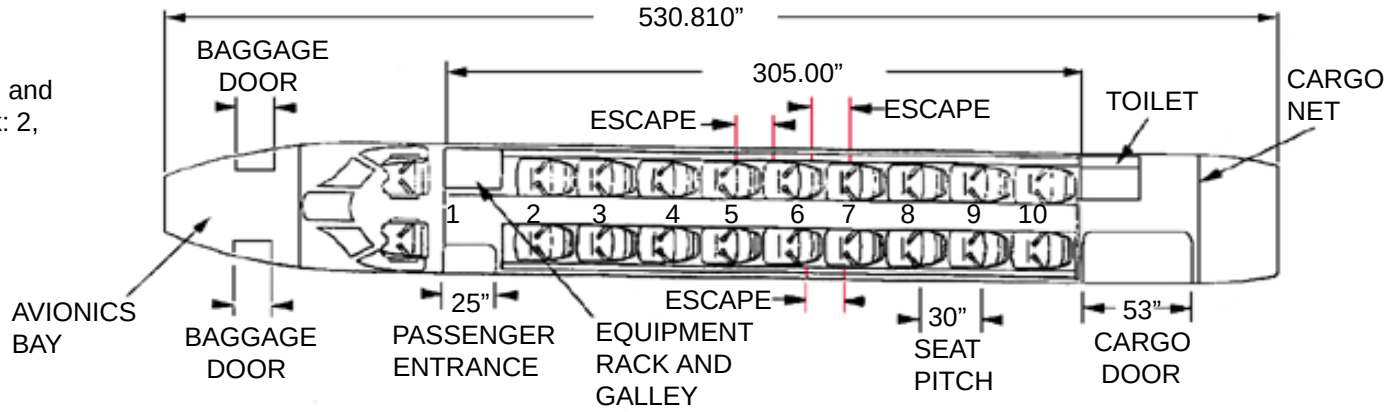

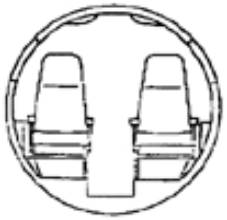

ROWS 2 - 9

ROW 10 (TYPICAL)

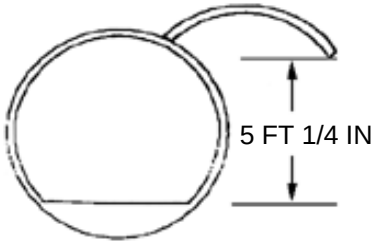

CARGO DOOR

AIRCRAFT DIMENSIONS AND SKIN PENETRATION POINTS

NOTE:

All dimensions are in feet/inches (in millimeters).

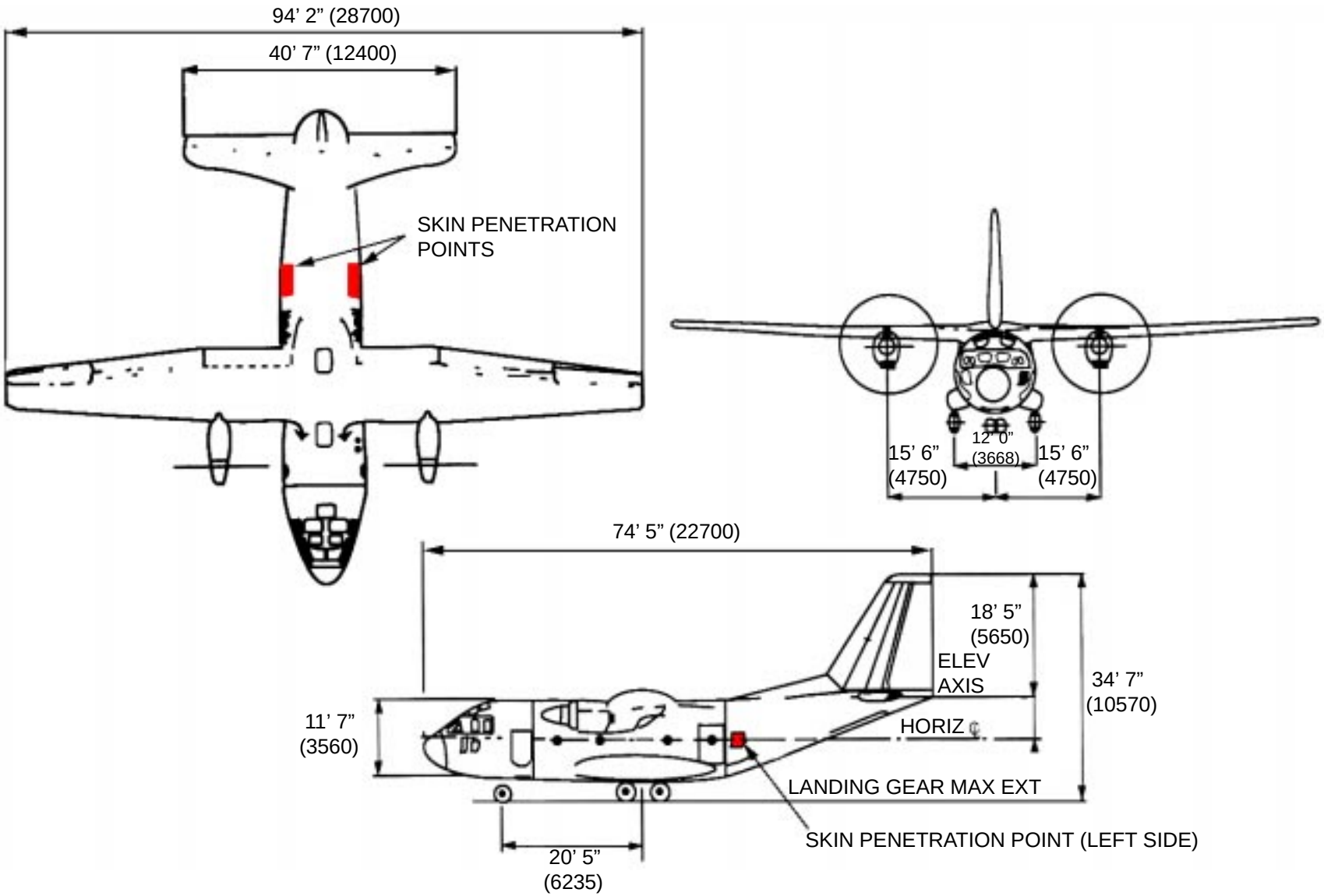

AIRCRAFT HAZARDS INFORMATION

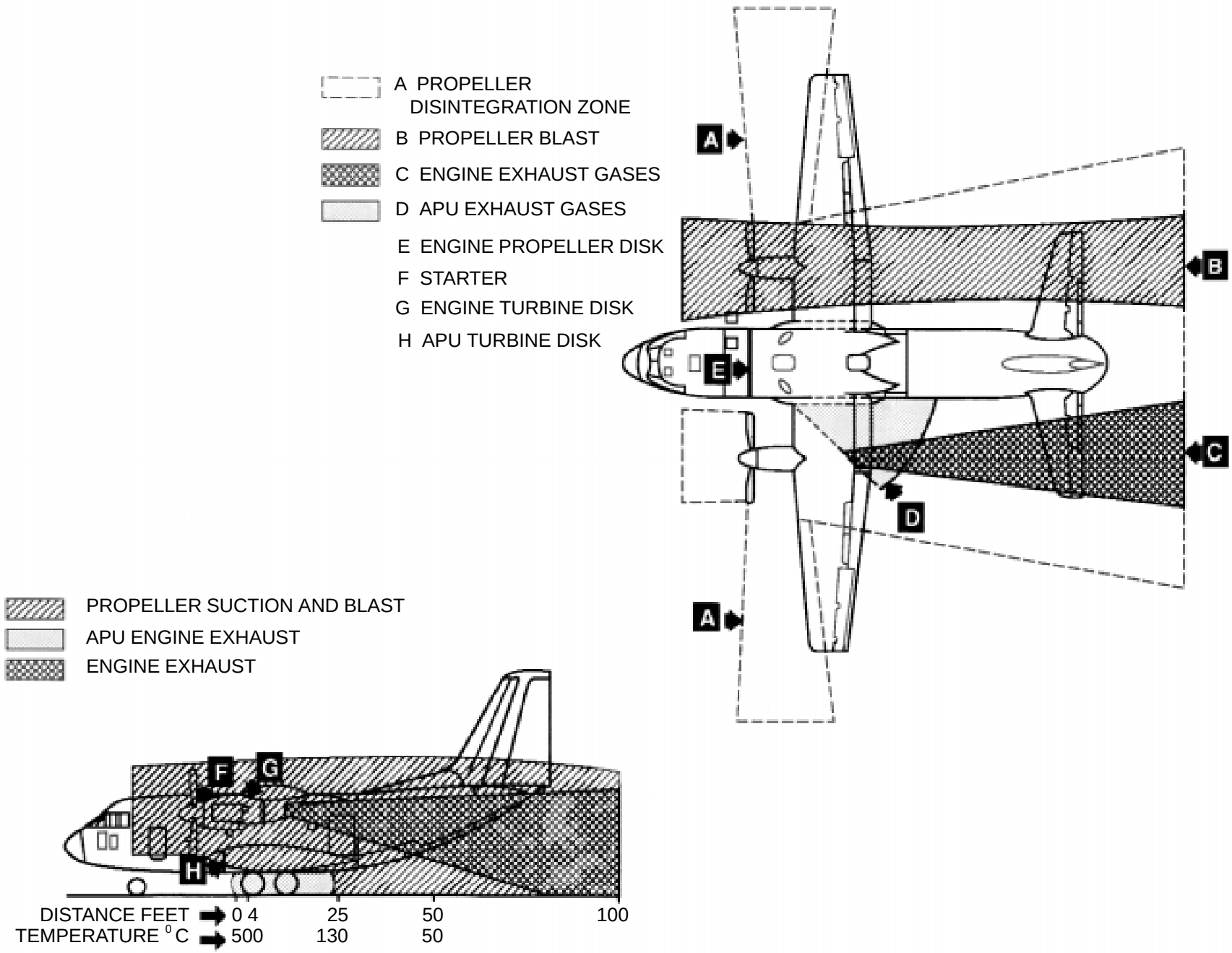

AIRCRAFT HAZARDS INFORMATION-Continued

MAXIMUM PERMISSIBLE EXPOSURE LEVEL (MPEL)

In order to avoid the envelope in which the radiation level exceeds the U.S. Government standard of 10 mW per square centimeter, all personnel should remain beyond the distance indicated in the illustration below. The distance to the MPEL boundary is calculated upon the basis of the largest antenna available with the system, rated output power of the transmitter and in the non-rotating or boresight position of the antenna. With a scanning beam, the power density of the MPEL boundary is significantly reduced.

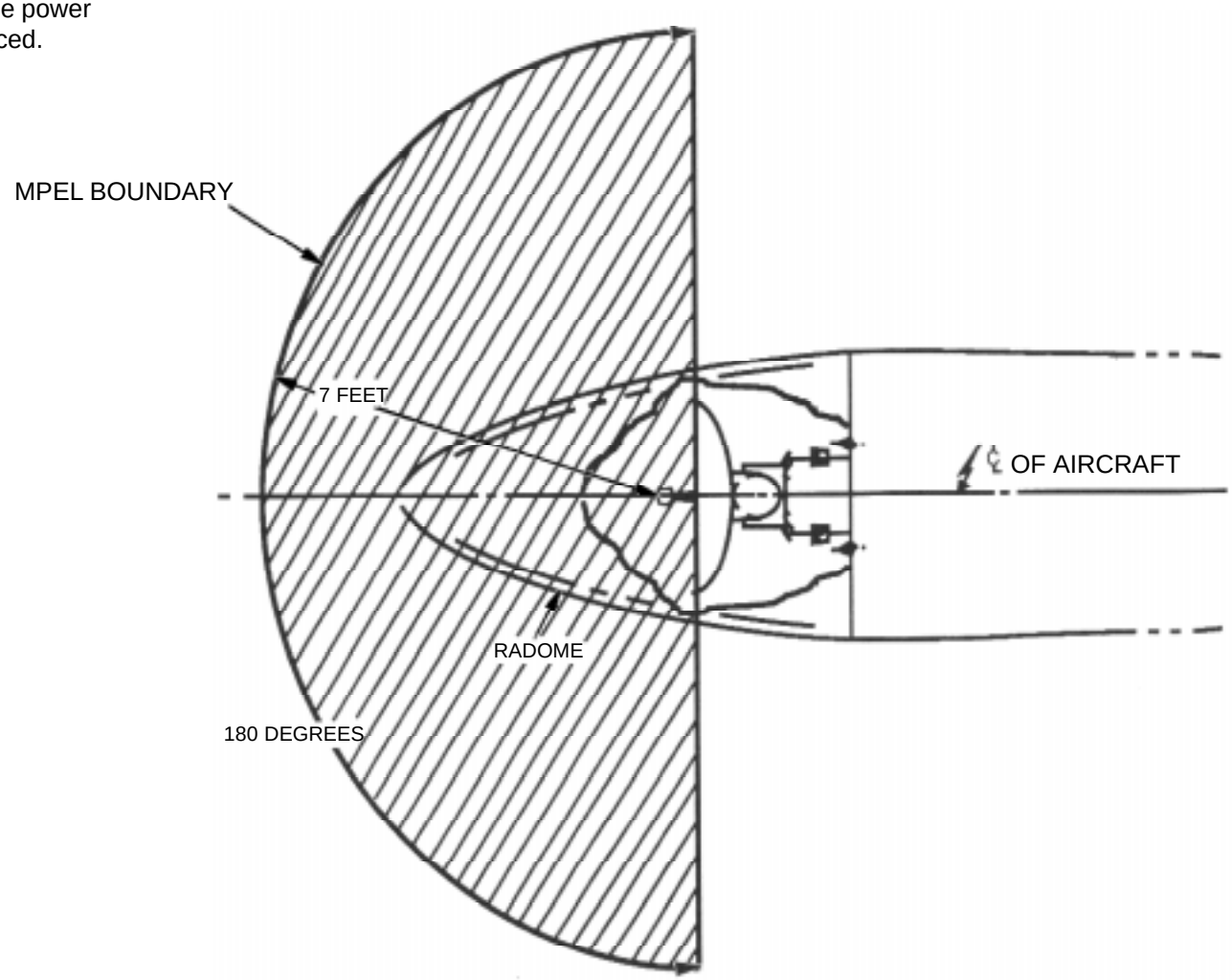

AIRCRAFT CONFIGURATIONS

TROOP TRANSPORT CONFIGURATION
34 SEATS MAXIMUM

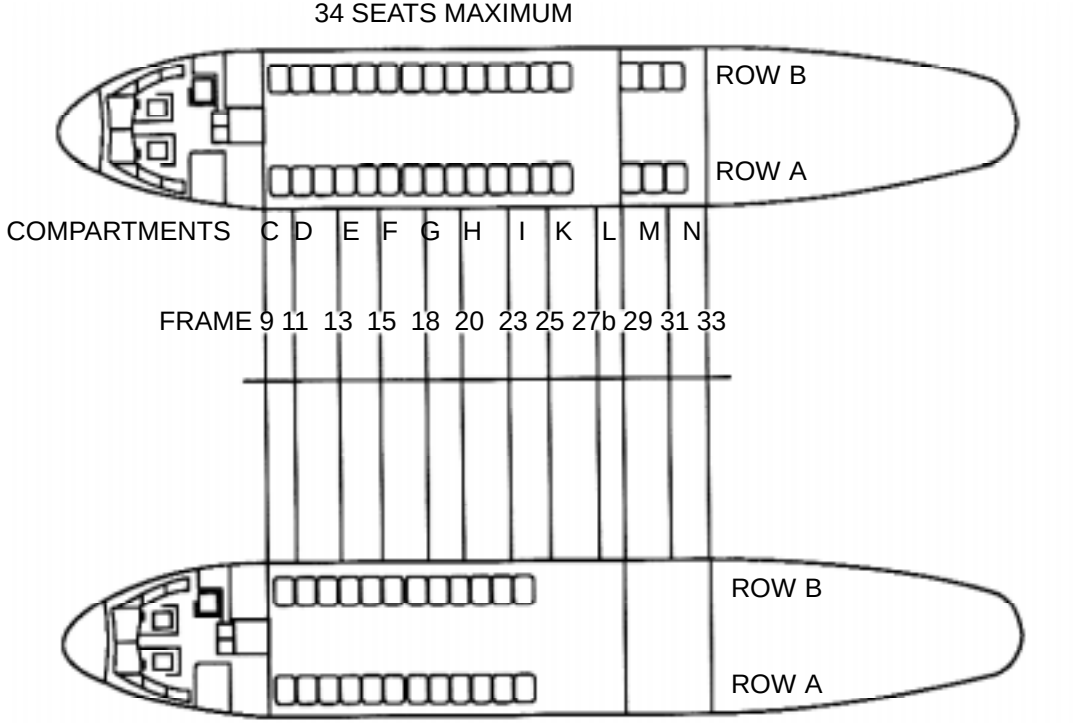

NUMBER OF SEATS PER ROW IN
TROOP TRANSPORT CONFIGURATION

ROW A NO. OF PLACES 17
TYPE OF SEAT 7 DOUBLE
3 SINGLE

ROW B NO. OF PLACES 17
TYPE OF SEAT 7 DOUBLE
3 SINGLE

PARATROOP CONFIGURATION
24 SEATS MAXIMUM

NUMBER OF SEAT PER ROW IN
TROOP PARATROOP CONFIGURATION

ROW A NO. OF PLACES 12
TYPE OF SEAT 6 DOUBLE

ROW B NO. OF PLACES 12
TYPE OF SEAT 6 DOUBLE

NUMBER OF SEATS PER COMPARTMENT

COMPARTMENTS	C	D	E	F	G	H	I	L	M	N	O
TROOP TRANSPORT CONFIGURATION	2	4	4	4	4	4	4	2		4	2
PARATROOP CONFIGURATION	2	4	4	4	4	4	2				

AIRCRAFT CONFIGURATIONS-Continued

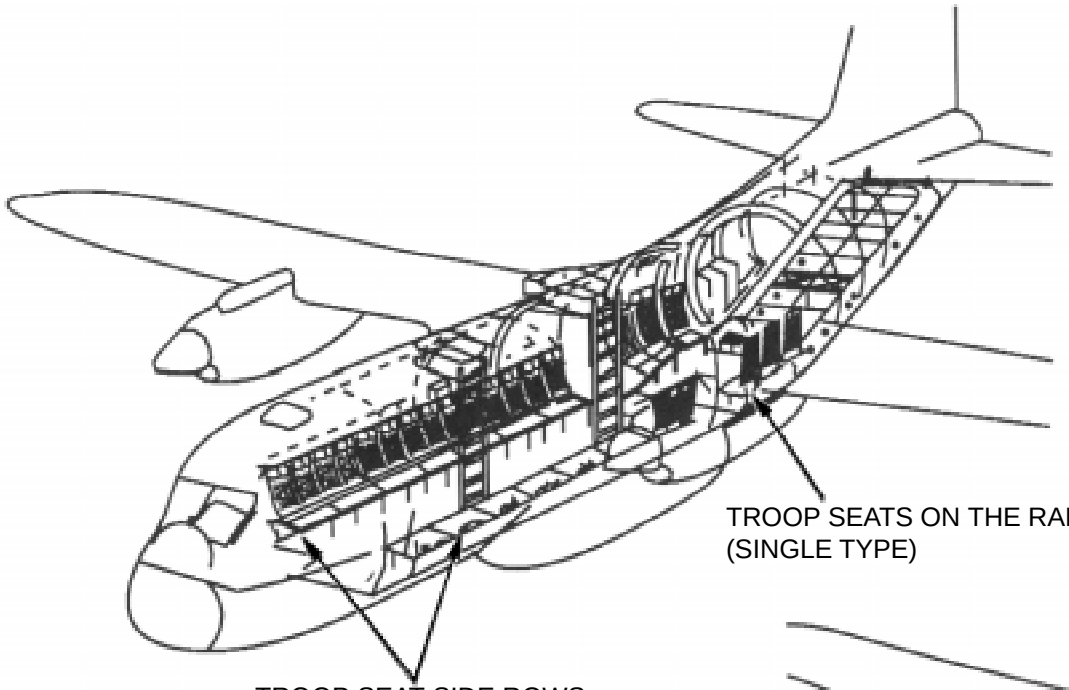

TROOP TRANSPORT CONFIGURATION
TROOP/PASSENGERS - 32 PERSONNEL

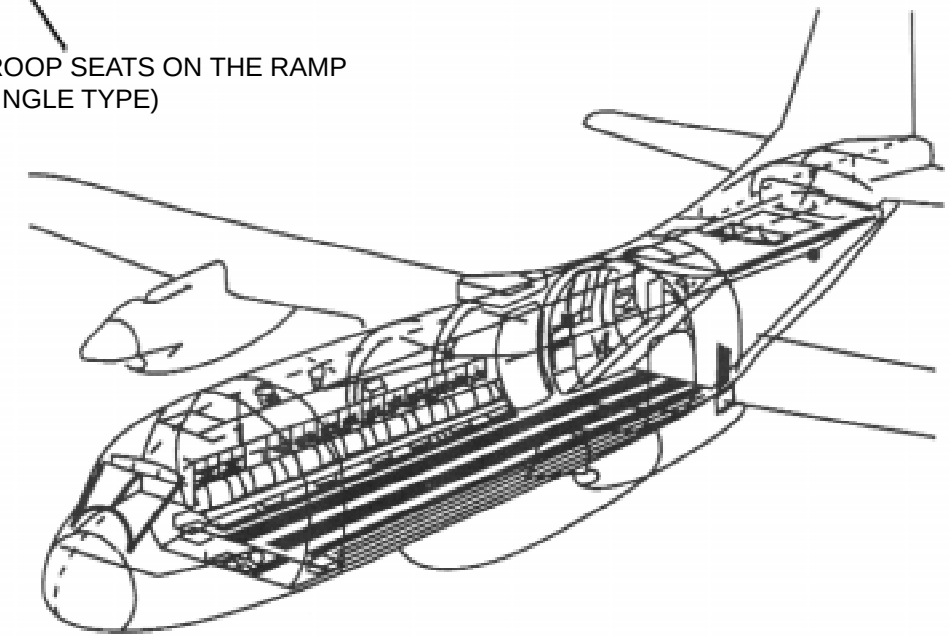

MATERIAL TRANSPORT CONFIGURATION

AIRCRAFT CONFIGURATIONS-Continued

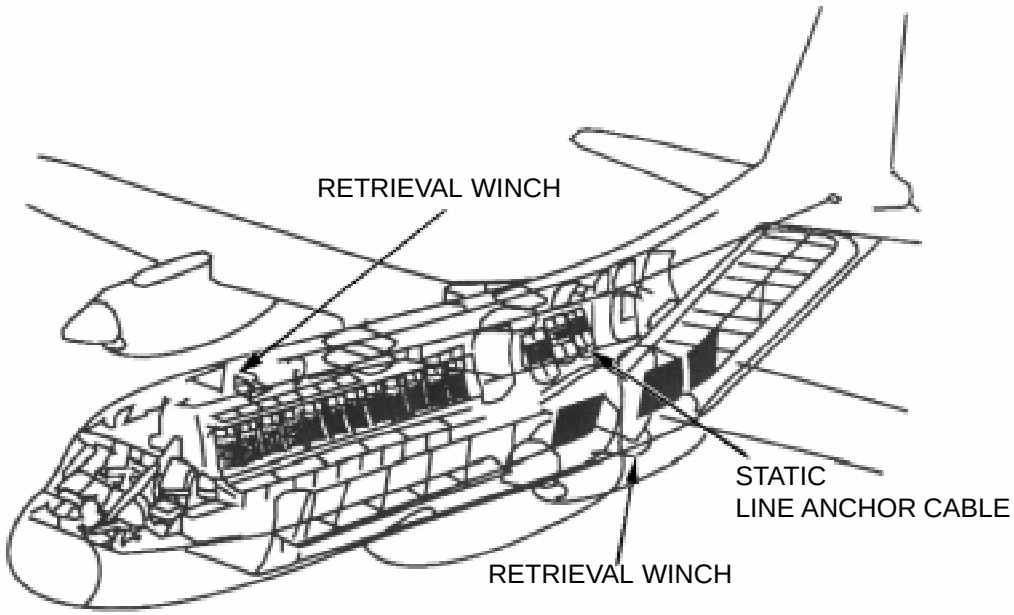

PARATROOP AIRDROP CONFIGURATION
PARATROOPERS - 24 PERSONNEL

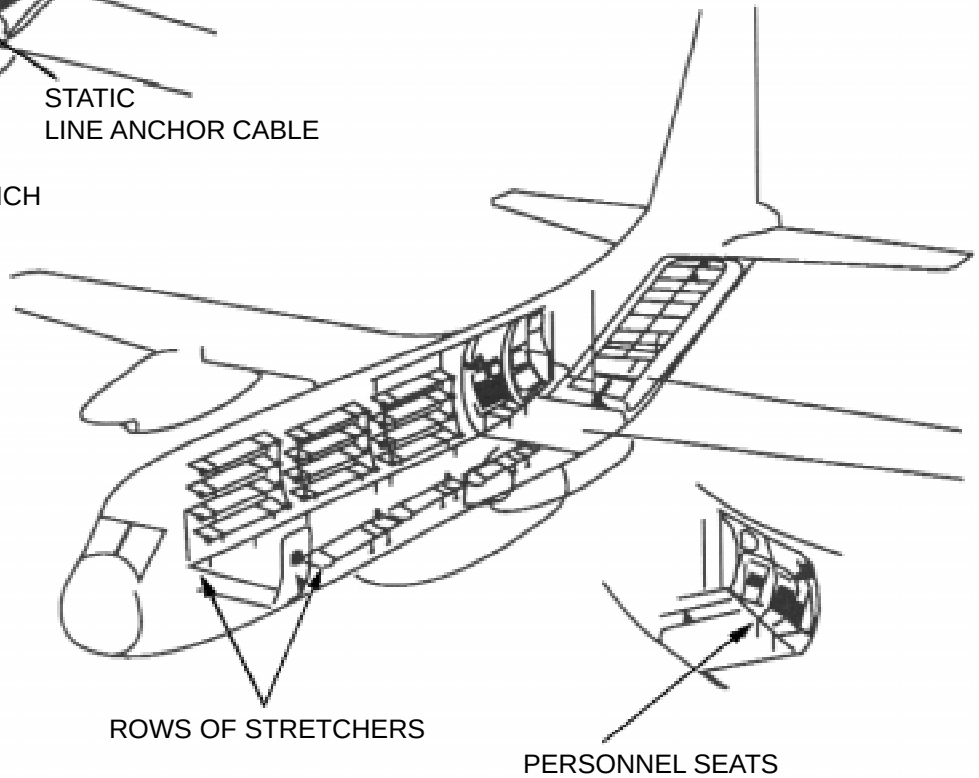

AEROMEDICAL EVACUATION CONFIGURATION
AEROMEDICAL - 24 LITTERS AND 5 ATTENDEES

SPECIAL TOOLS/EQUIPMENT
Power Rescue Saw
Fire Drill II

NOTE:
TOTAL FUEL - 3170 US GALS.

AIRCRAFT ENTRY

1. NORMAL ENTRY

a. Pull the external control handle on the crew entrance door, located bottom center of door. Door is equipped with a stairway.

b. The two paratroops doors are located on the right and left sides of the fuselage, behind the landing gear fairings. The doors are opened by rotating the unlocking handle clockwise and pushing (or pulling) inward and sliding the doors upward.

2. EMERGENCY ENTRY

a. There are three upper exit hatches located on the aircraft's backbone. The unlock handles are located at center of each hatch and can be unlocked by depressing two throttle buttons and rotating the handle clockwise. Hatches are hinged and will open inward.

b. A toilet exit hatch, located on right side of aircraft opposite crew entrance door, can be opened by depressing hatch button and rotating hinged lever downwards to unlock the hatch bolts. Hatch is hinged and will open inward.

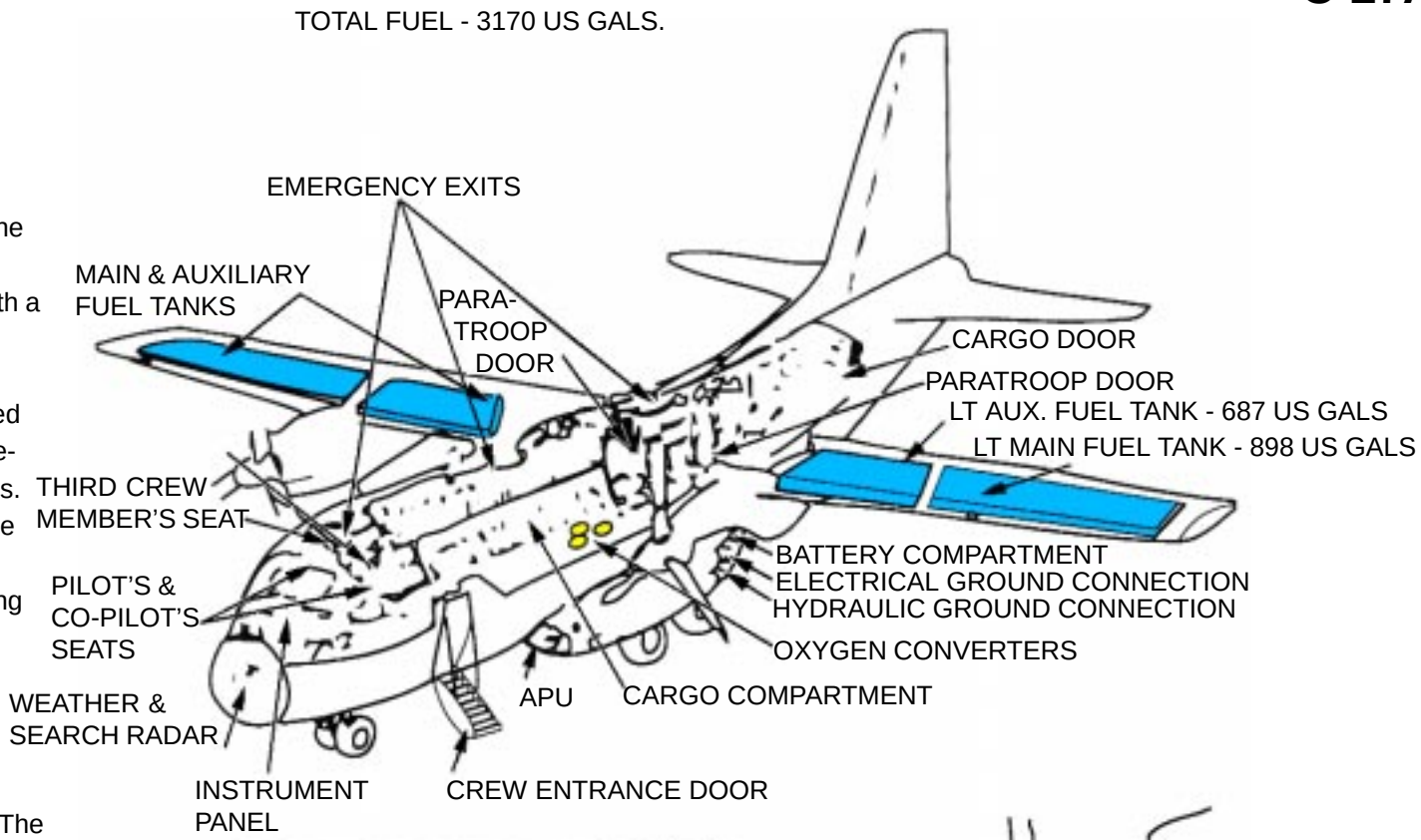

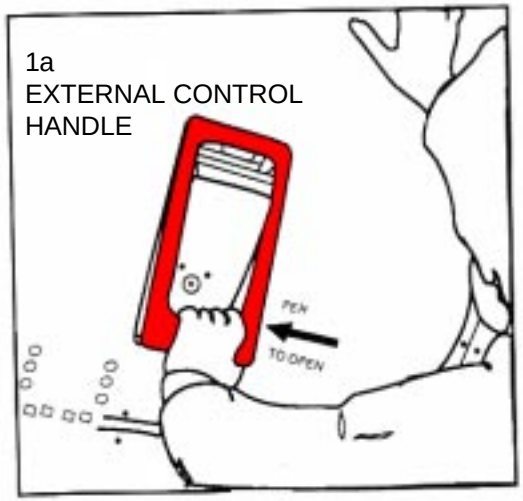

1a
EXTERNAL CONTROL HANDLE

1b
PARATROOP DOOR UNLOCK HANDLE

AIRCRAFT ENTRY-Continued

NOTE:

If pip-pins are installed, entry through hatches cannot be accomplished. Pip-pins prevent accidental opening. They will be removed before flight.

c. Flight compartment windows can be removed once unlocked, by pulling a ring located on the upper aft part of each window.

3. CUT-IN

a. Two cut-in areas are provided to the rear of each paratroop door on the fuselage defined by black corner markings.

4. PARATROOP DOOR OPERATION

a. Unlocking from the outside, rotate center handle counterclockwise, push door inward to stops, and force door over stops by pushing upward and inward on lower door surface.

b. Unlocking from the inside, raise and turn center handle and rotate clockwise, pull door inwards using upper left hand hold, and force door over stops by pulling upward and inward on lower door surface.

NOTE:

All aircraft doors and hatches (with the exception of pilot's and copilot's windows that can be opened from the inside) can be opened both from inside and outside and for this reason can be used in case of emergency, both to evacuate the aircraft and to carry out rescue operations from the outside.

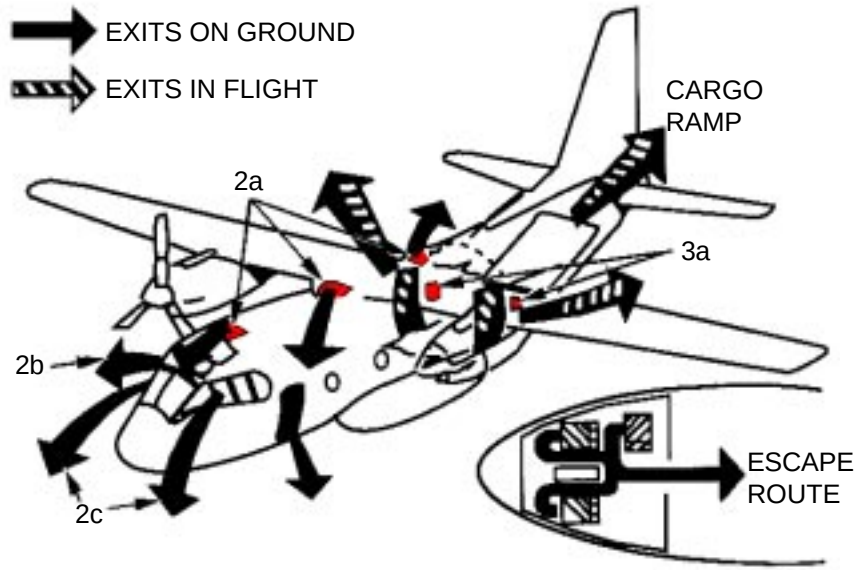

4a
TROOP DOOR (INTERIOR)

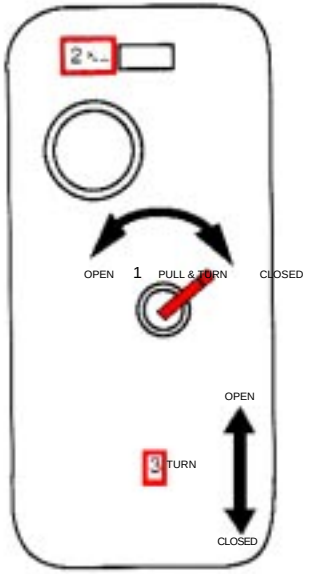

4b
TROOP DOOR (EXTERIOR)

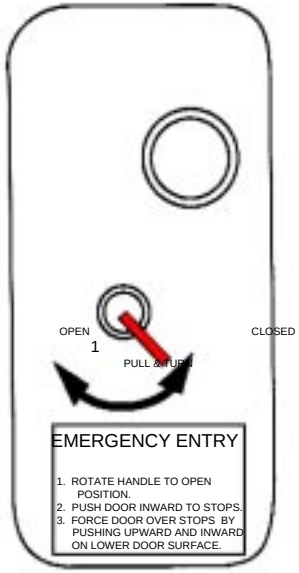

AIRCRAFT ENTRY-Continued

5. EMERGENCY HATCH ACCESS LADDER INSTALLATION

a. Insert the upper end at the ladder into the ladder hold down. (See detail A.)

b. Push the ladder upward.

c. Align with the fastening studs on the floor.

d. Push the ladder downward until it engages with the fastening studs on the floor. (See detail B.)

NOTE:
Escape ropes are provided at each upper exit hatch. Length of rope is approximately 20 ft.

WARNING

Upper exit hatches open inward and can cause head injuries if allowed to free fall.

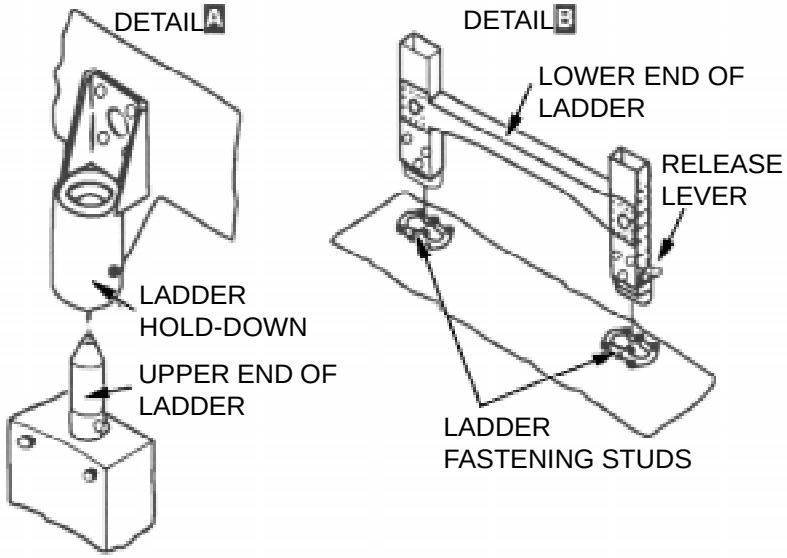

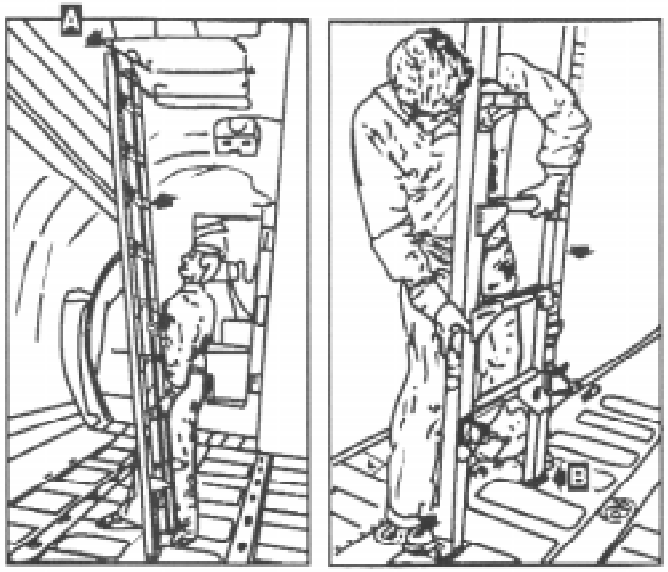

FORWARD VIEW OF MOUNTED LADDERS LEADING TO EMERGENCY HATCH OPENING

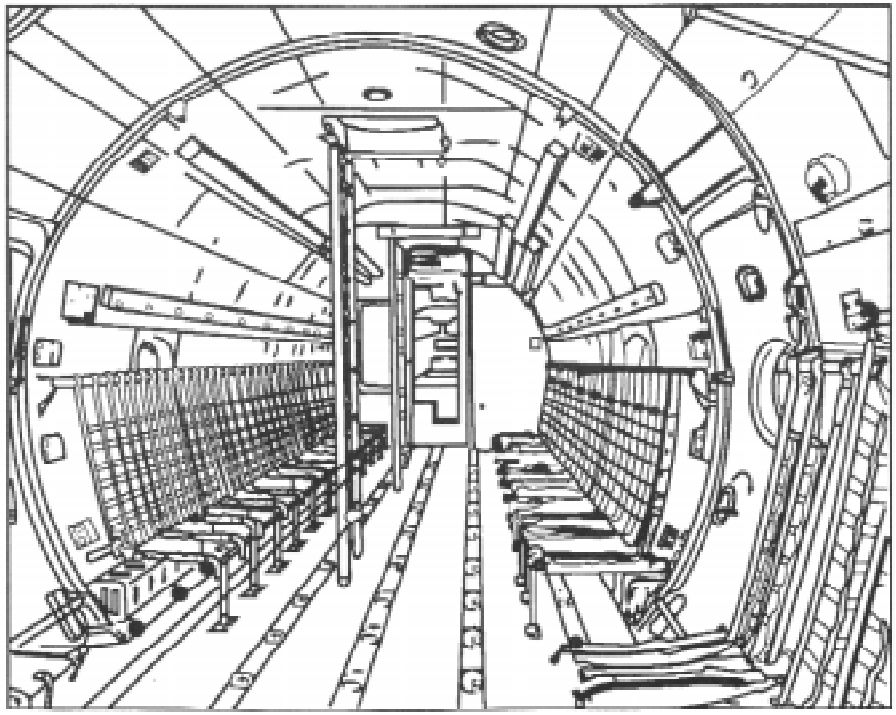

ENGINE SHUTDOWN AND AIRCREW EXTRACTION

1. ENGINE SHUTDOWN

a. Pull Fire T-handles located at center overhead console.

NOTE:

When the POWER lever is in the REVERSE sector, pulling the FIRE PULL handle does not operate the propeller feathering system.

b. Place PROP. COND lever in feather position.

CAUTION

If the engine is at a high power setting, pulling the FIRE PULL handle or placing the PROP COND lever to FEATHER will cause an OVERTORQUE condition.

c. Place ENG. COND lever in STOP position.

d. Push FIRE T-handles, if a fire indication persists, to discharge agent.

e. Place the BATTERY SWITCH to OFF.

f. Extract personnel and evacuate aircraft.

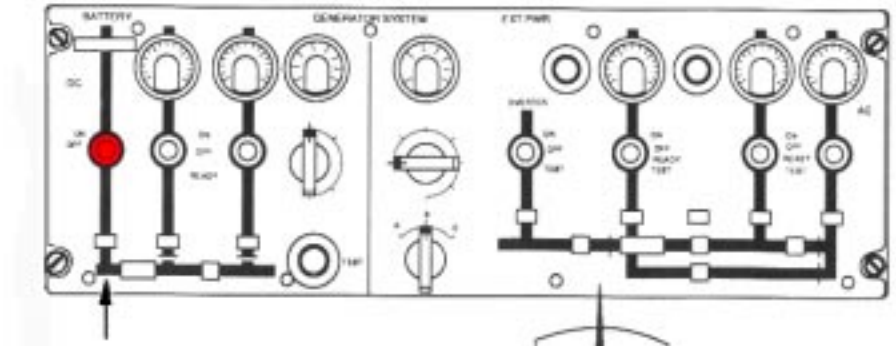

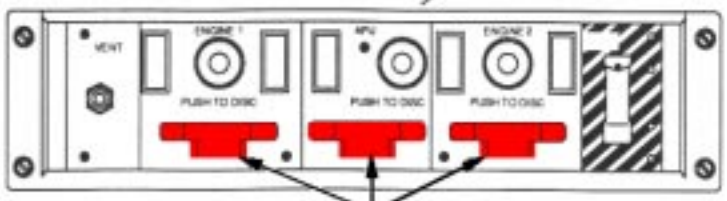

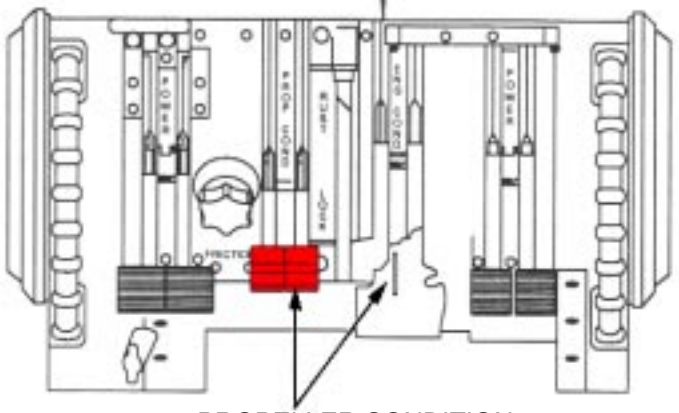

AIRCREW EXTRACTION-Continued

2. AIRCREW EXTRACTION

a. Release the four point harnesses by rotating the dial at the center hook-up point for the pilot/ copilot and observer/instructor seats.

b. Release the loadmaster from his seat by releasing the two point seat belt.

c. Extraction can be made easier by adjusting the crew seats to the fully outboard position. Observer/instructor seat should be adjusted fully aft, extract crewmember, then reposition seat fully forward allowing room for extraction of pilot and copilot.

d. Passengers do not have shoulder harnesses. Release passengers from two point seat belts.

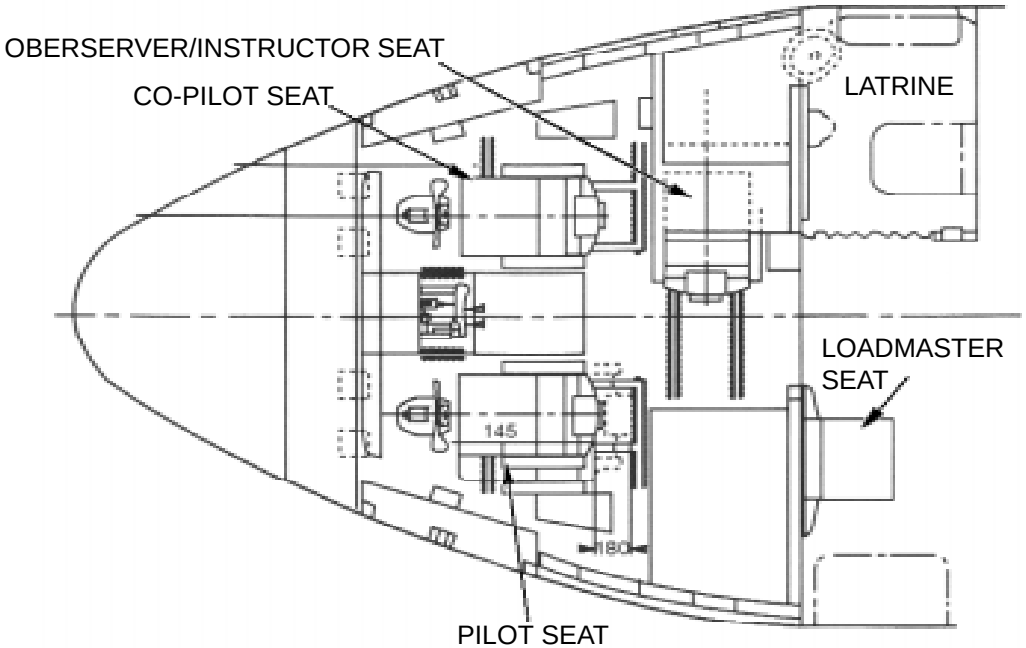

AIRCREW SEATS

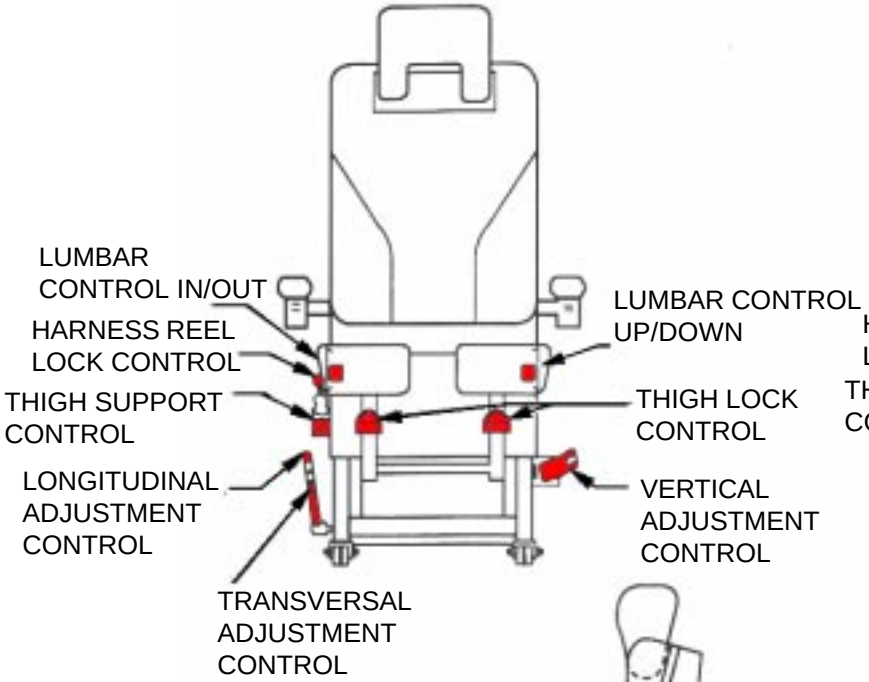

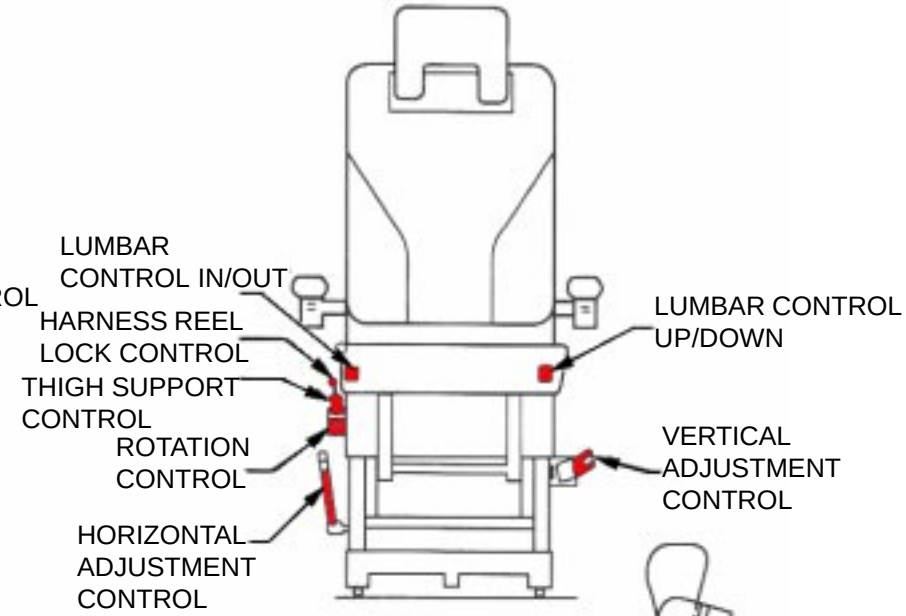

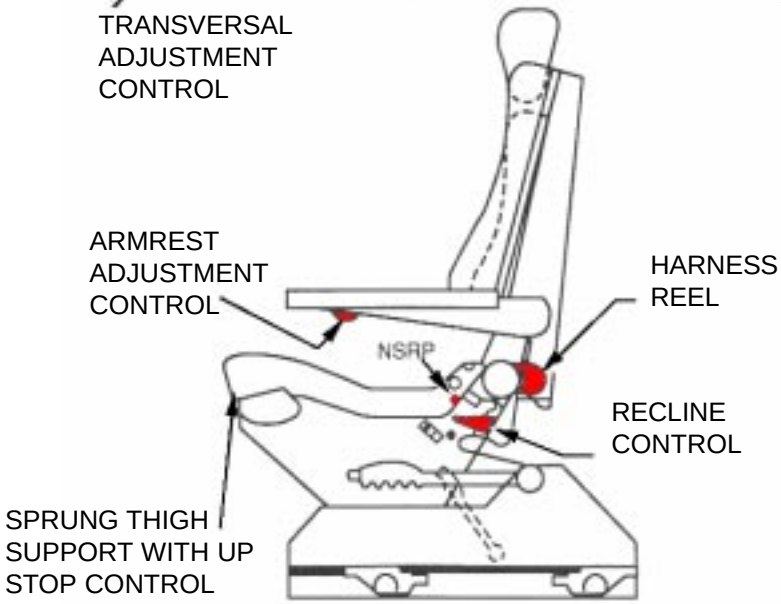

PILOT'S AND CO-PILOT'S SEAT
(UPPER AND LOWER GRAPHIC)

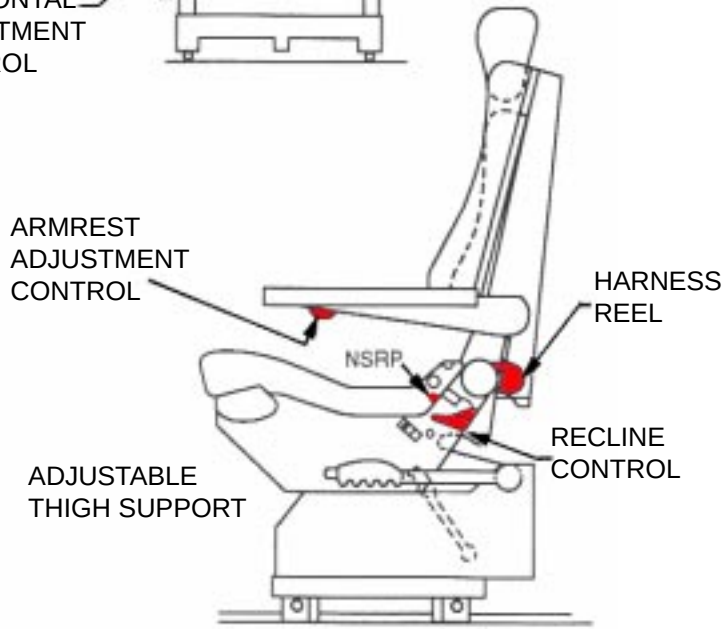

THIRD CREW MEMBER'S SEAT
(UPPER AND LOWER GRAPHIC)

AEROMEDICAL OXYGEN SYSTEM COMPONENTS AND PORTABLE O2 BOTTLES LOCATIONS

1. AEROMEDICAL OXYGEN SYSTEM

a. See details A-D for component location.

2. PORTABLE 02 BOTTLES

a. Five portable 02 bottles are in the aircraft. Three in the cockpit and two in the cargo compartment, one located in the latrine and one in the two additional mounting locations located in the right rear of the cargo compartment.

AIRCRAFT EXPLOSIVES

1. AIRCRAFT FLARES.(Not pictured.)

a. Aircraft is equipped with a total of six flares: 3 green and 3 red. Class C explosive.

b. Aircraft is equipped with a pyrotechnic pistol that is used to fire the above signal flares. The location of the pistol is housed in a compartment closed by a small door on the right side of the cockpit above the main circuit breaker panel.

2. EXTINGUISHER CARTRIDGES (Not pictured.)

a. The right, left engines and APU are equipped with extinguisher bottles explosive cartridges. These cartridges are 1.4 rated. Extinguishers utilize Halon 1211.

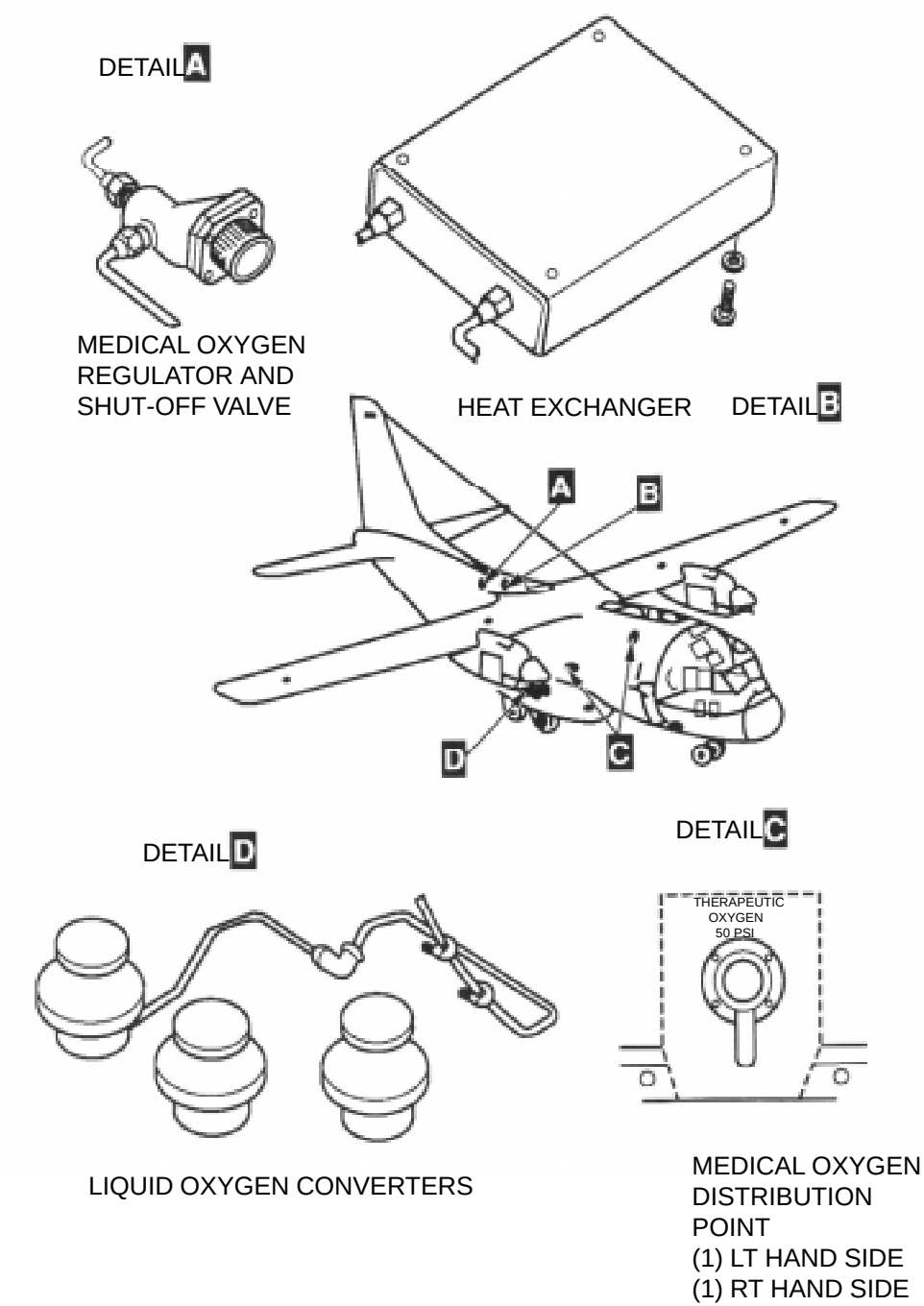

AIRCRAFT PAINT SCHEME

AIRCRAFT DIMENSIONS

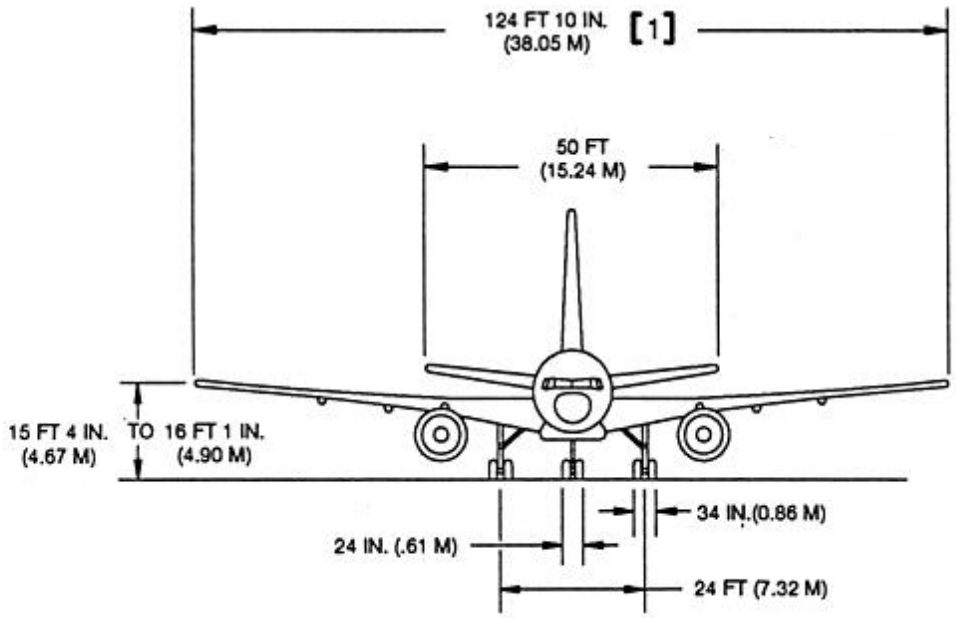

[1] THIS DIMENSION INCLUDES 2 INCHES (0.05 M) ON EACH WING TIP FOR ANTI-COLLISION LIGHTS

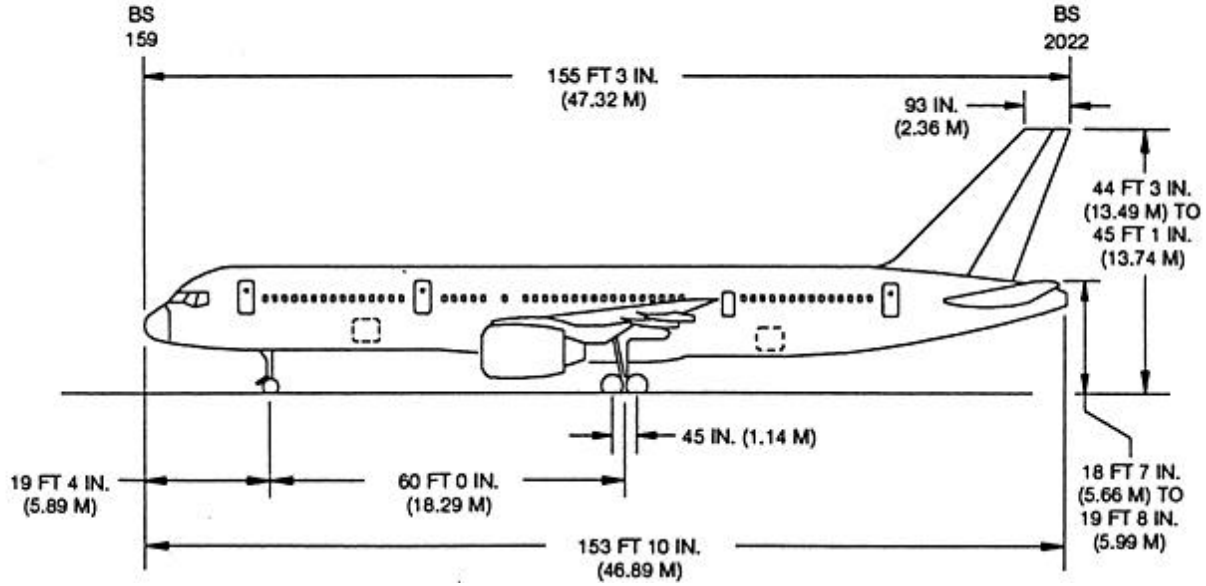

SKIN PENETRATION POINTS

NOTE:

This aircraft is the same as a Boeing 757-200. The C-32A is the official USAF designation for Vice Presidential transport. It has been modified and configured to accommodate his staff, a distinguished visitor stateroom, a conference area, a business class and general seating. See INTERIOR ARRANGEMENT page for specifics.

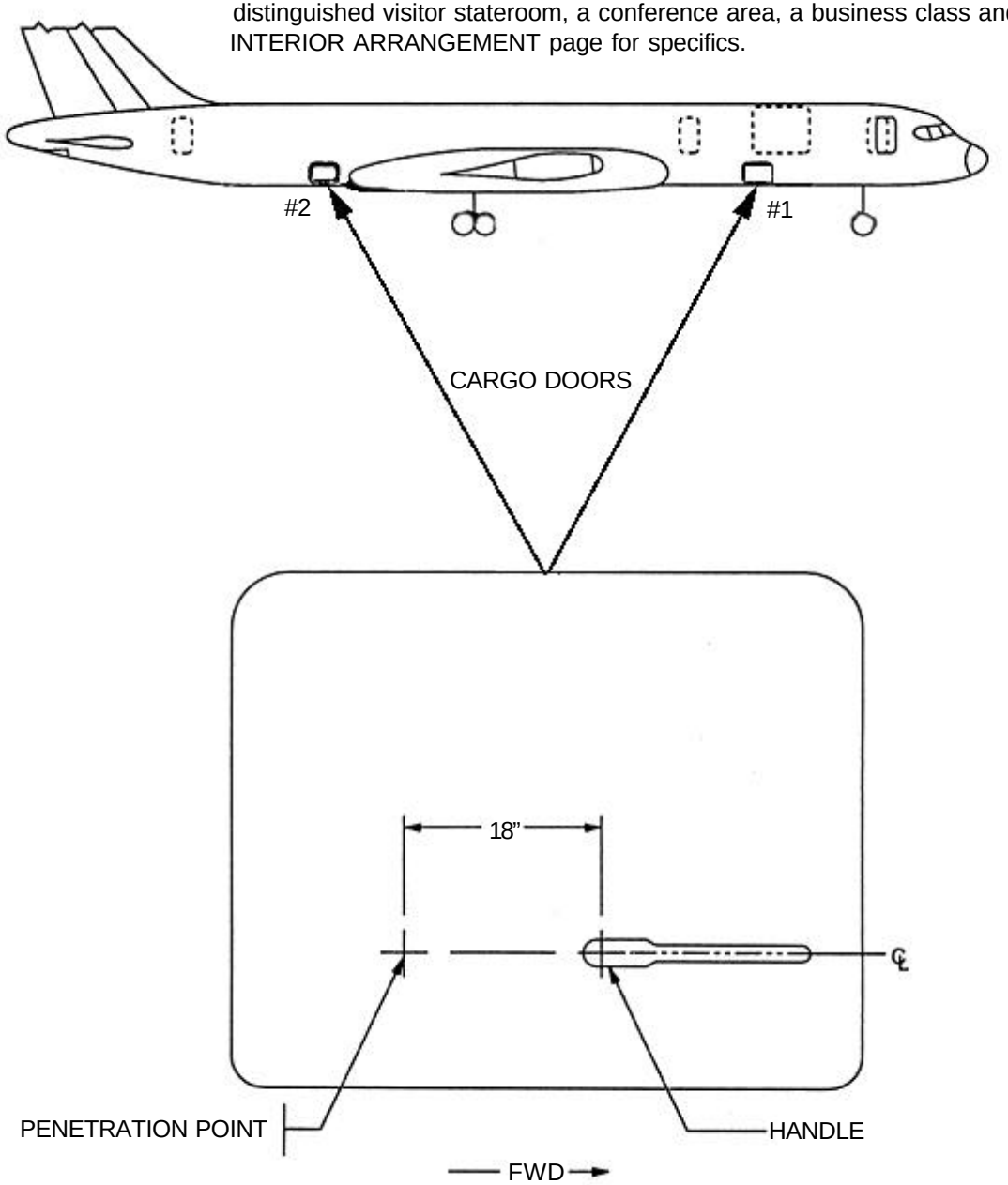

SKIN PENETRATION POINTS-Continued

757-200 (PW 2037)

PENETRATION POINTS

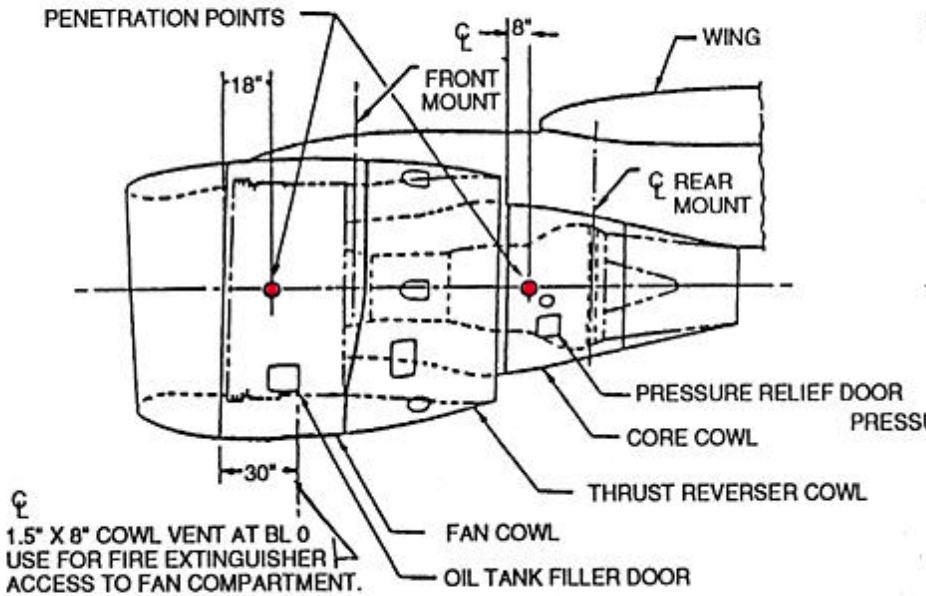

ENGINE NACELLE
LEFT SIDE VIEW

757-200 (PW 2037)

PENETRATION POINTS

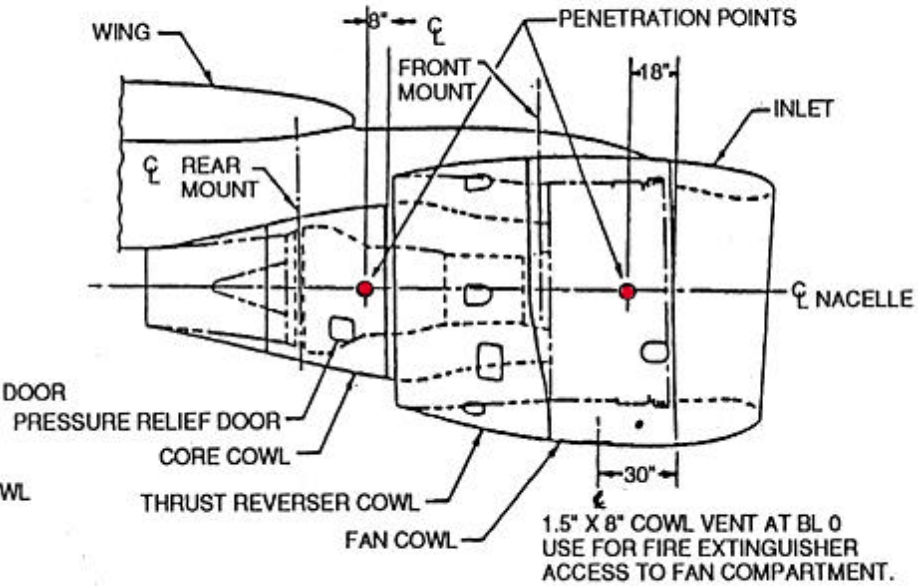

ENGINE NACELLE
RIGHT SIDE VIEW

AIRCRAFT DIMENSIONS-Continued

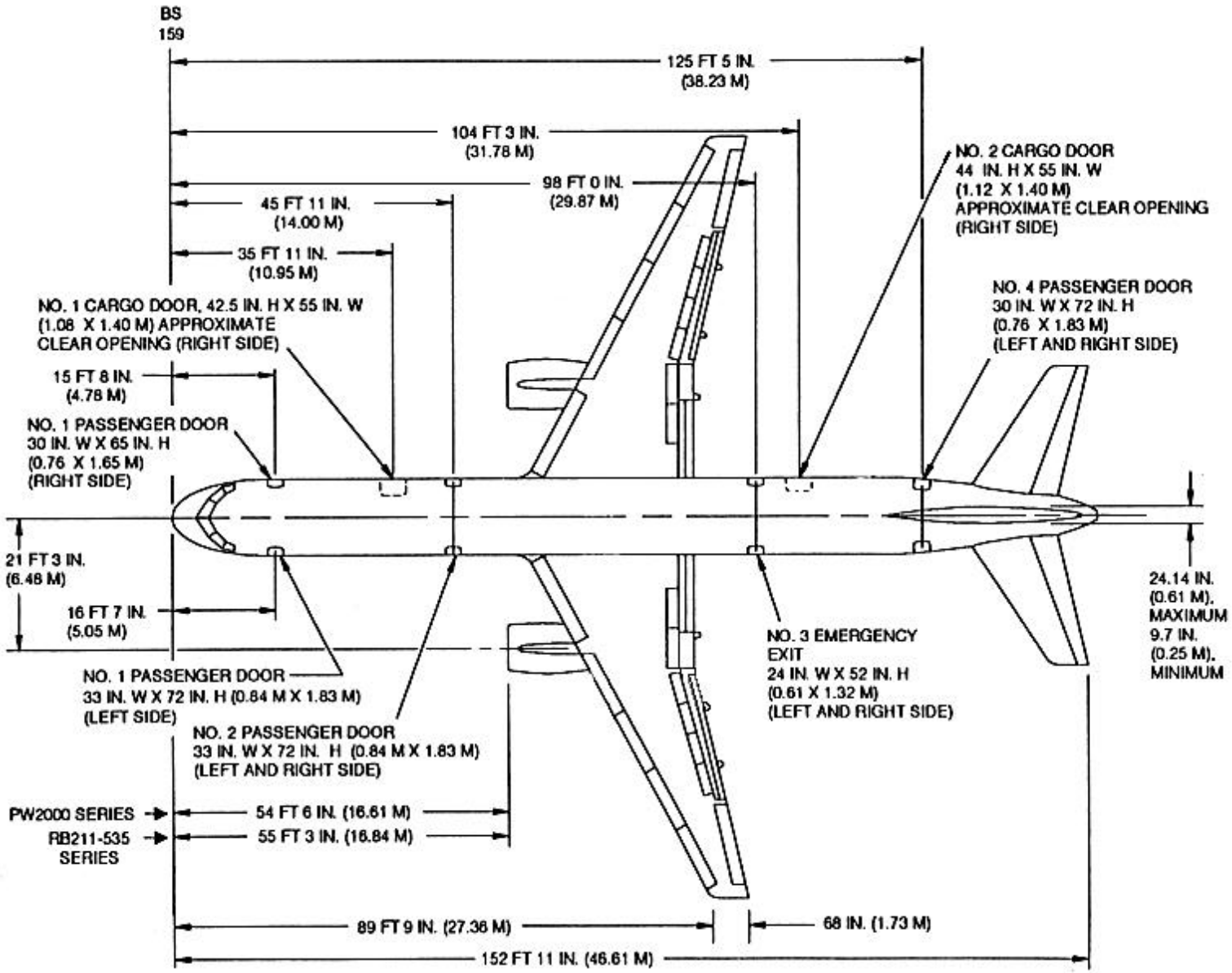

AIRCRAFT HAZARDS

JET ENGINE INTAKE/EXHAUST AREAS AT IDLE

WARNING

- If surface wind is reported greater than 25 knots, increase distance of intake boundary by 20%.
- If ramp surfaces are slippery, additional precautions such as cleaning the ramp will be necessary to provide personnel safety.

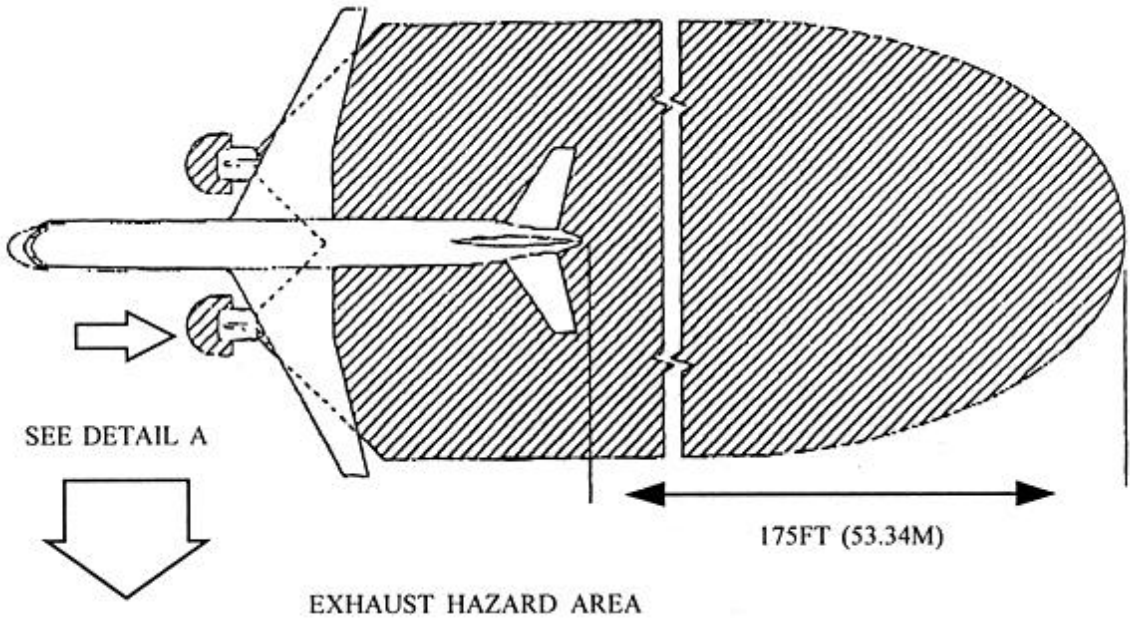

EXHAUST HAZARD AREA

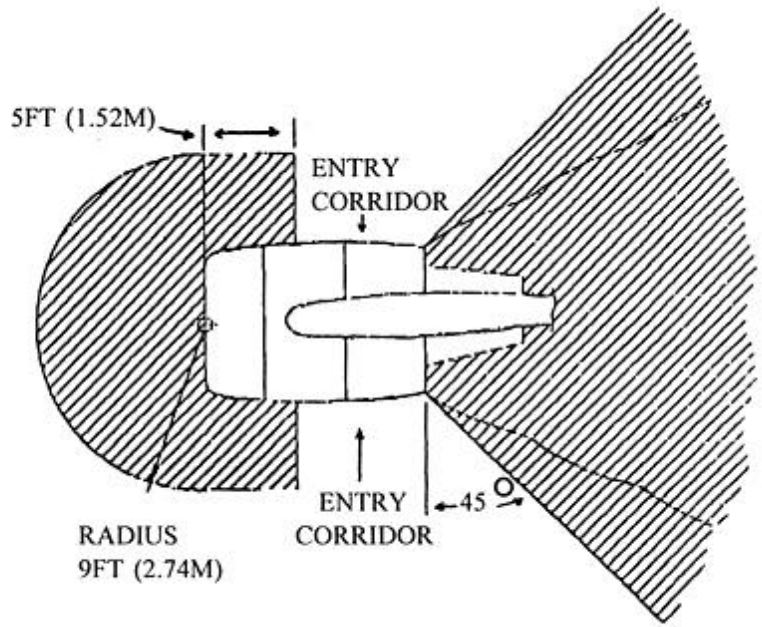

INLET HAZARD AREA

AIRCRAFT HAZARDS-Continued

JET ENGINE INTAKE/EXHAUST AREAS AT FORWARD BREAKAWAY AND TAKEOFF THRUST

WARNING

- If surface wind is reported greater than 25 knots, increase distance of intake boundary by 20%.
- If ramp surfaces are slippery, additional precautions such as cleaning the ramp will be necessary to provide personnel safety.
- Ground personnel must stand clear of these hazardous zones and maintain communication with flight compartment personnel during engine running.

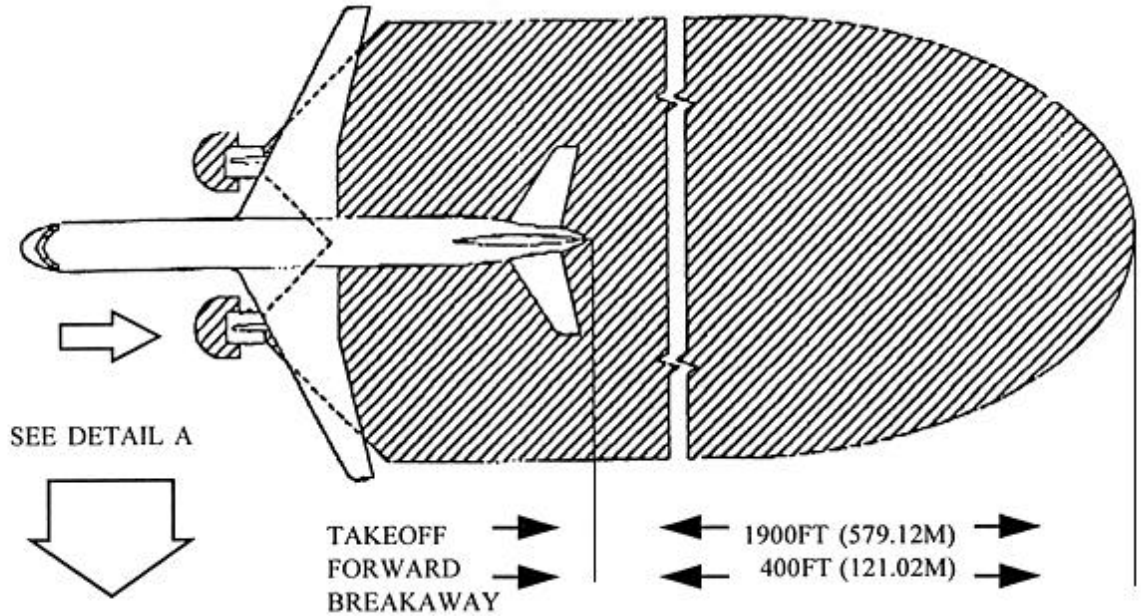

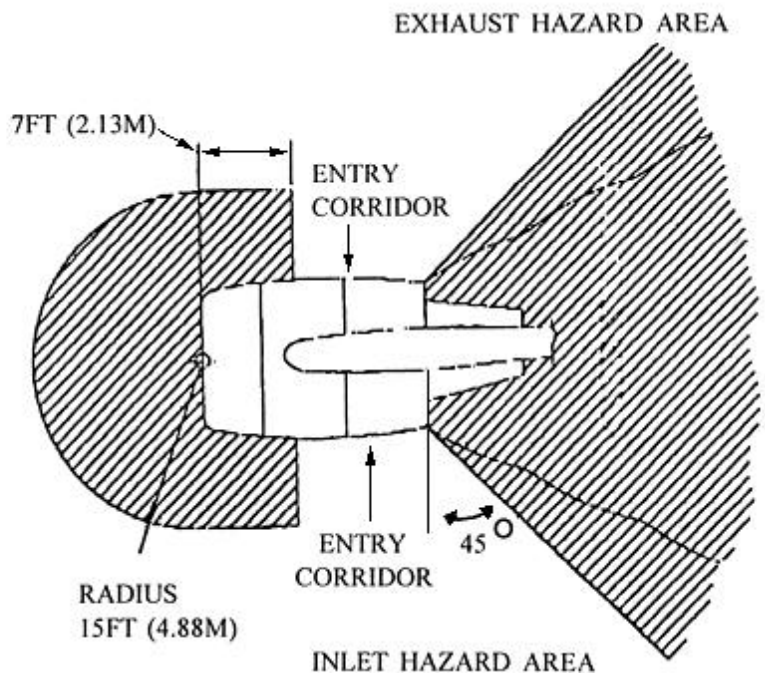

AIRCRAFT HAZARDS-Continued

JET ENGINE REVERSE IDLE

WARNING

- If ramp surfaces are slippery, additional precautions such as cleaning the ramp will be necessary to provide personnel safety.

- Ground personnel must stand clear of these hazardous zones and maintain communication with flight compartment personnel during engine running.

CAUTION

For maintenance, engine operation in reverse thrust is limited to minimum idle power.

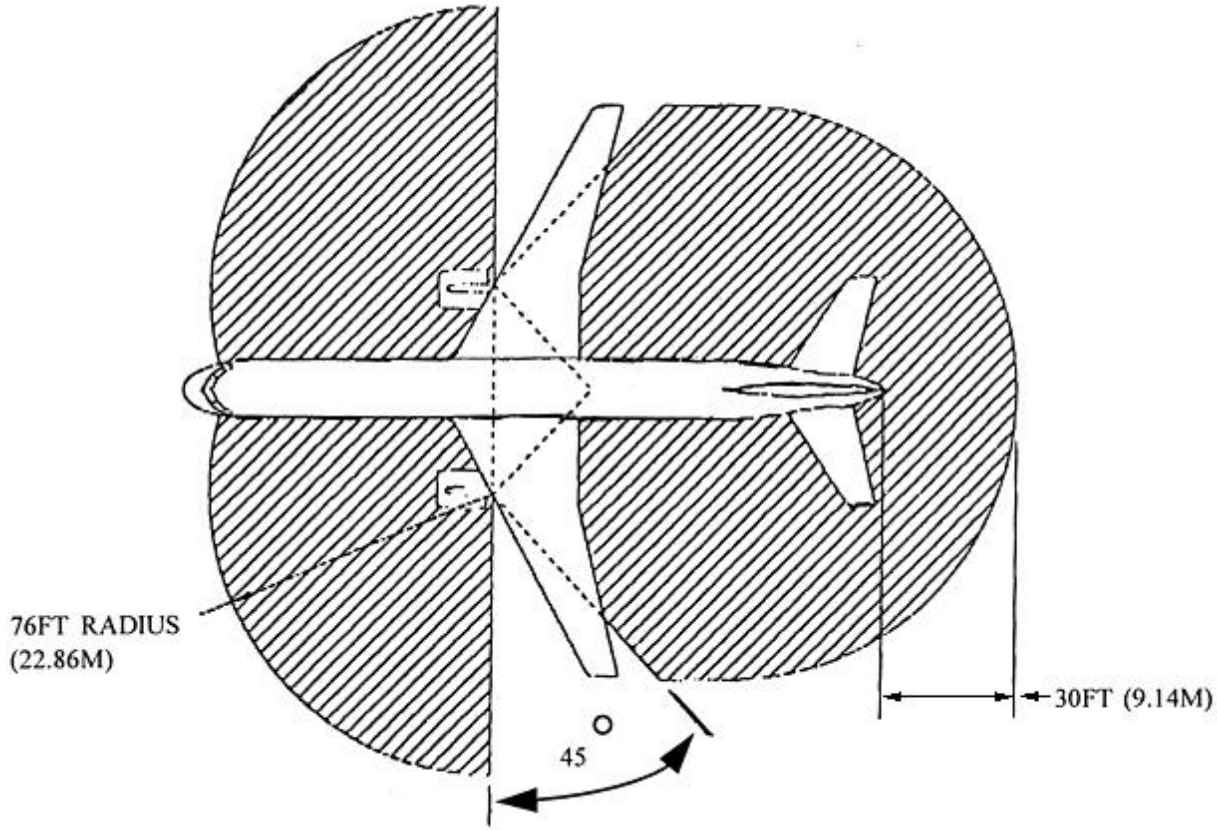

AIRCRAFT HAZARDS-Continued

RADIATION HAZARDS

NOTE:

MAXIMUM PERMISSIBLE EXPOSURE LEVEL (MPEL)

In order to avoid the envelope in which the radiation level may exceed the U.S. Government standard of 10 miliwatt per square centimeter, all personnel should remain beyond the distance indicated in the illustration. The distance to the MPEL boundary is determined by calculating the near field/far field intersection per FAA Advisory Circular 20-68B.

WARNING

The C-32A radome generates microwave radiation. Improper use or exposure may cause serious bodily injury. Maintain prescribed safe distance when standing in front of a radiating antenna. Never expose eyes or any part of the body to an unterminated wave-guide.

The HF-9000 High-Frequency Communications System can cause serious burns from direct contact when the system is transmitting. Do not touch the RF output terminal on the antenna coupler, the antenna lead-in wire, the insulated feedthrough, or the antenna itself. When operated into an antenna, it may produce electro-magnetic fields near the antenna that exceed OSHA recom mended maximum limits.

DO NOT operate the Airborne Weather Radar (AWR) during refueling of the aircraft nor when within 300 feet (91.44 meters) of other refueling operations.

DO NOT operate the AWR within 15 feet (4.57meters) of ground personnel or containers holding flammable or explosive material.

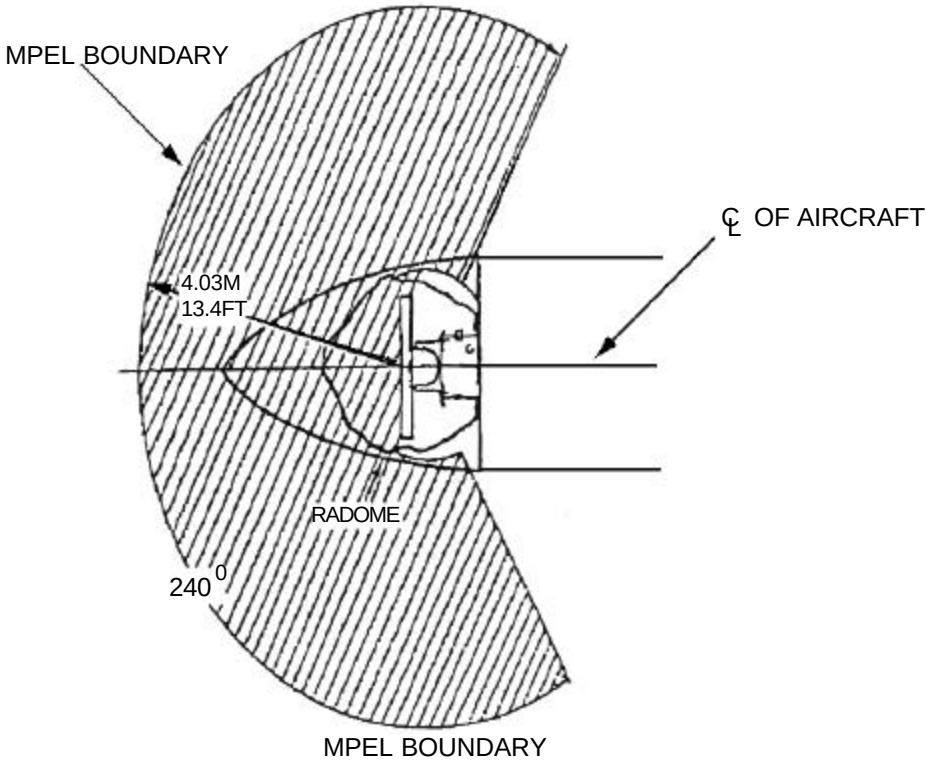

AIRCRAFT HAZARDS-Continued

JET ENGINE EXHAUST WAKES

NOTE:

Measurement in feet.

GROUND IDLE CONDITION

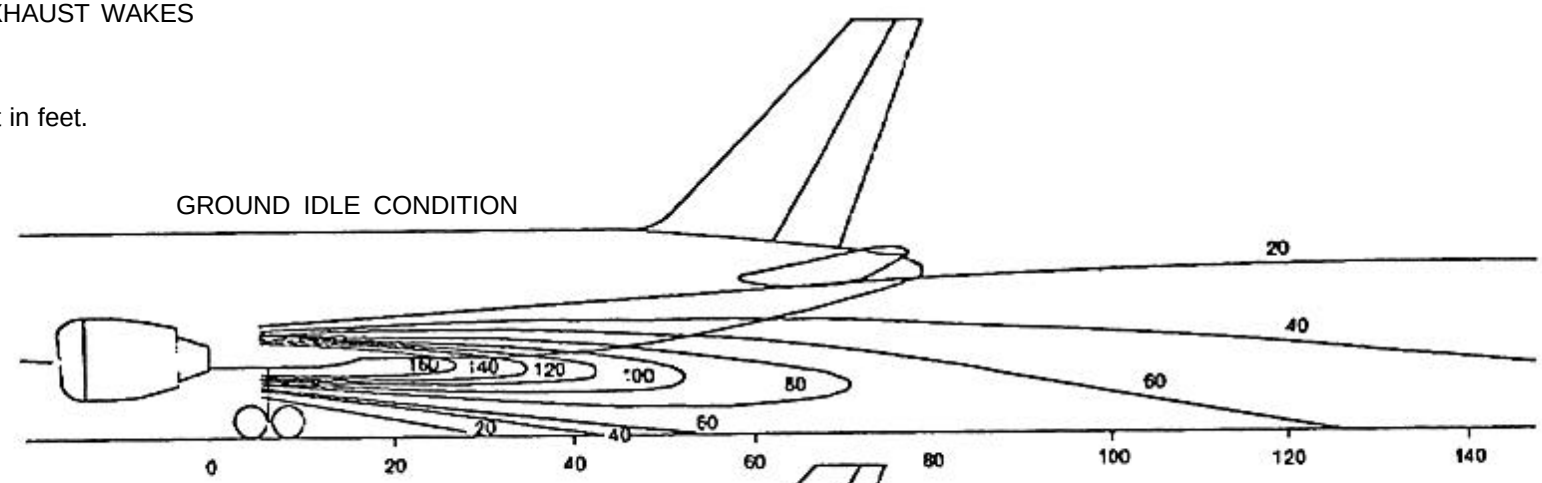

BREAKAWAY CONDITION

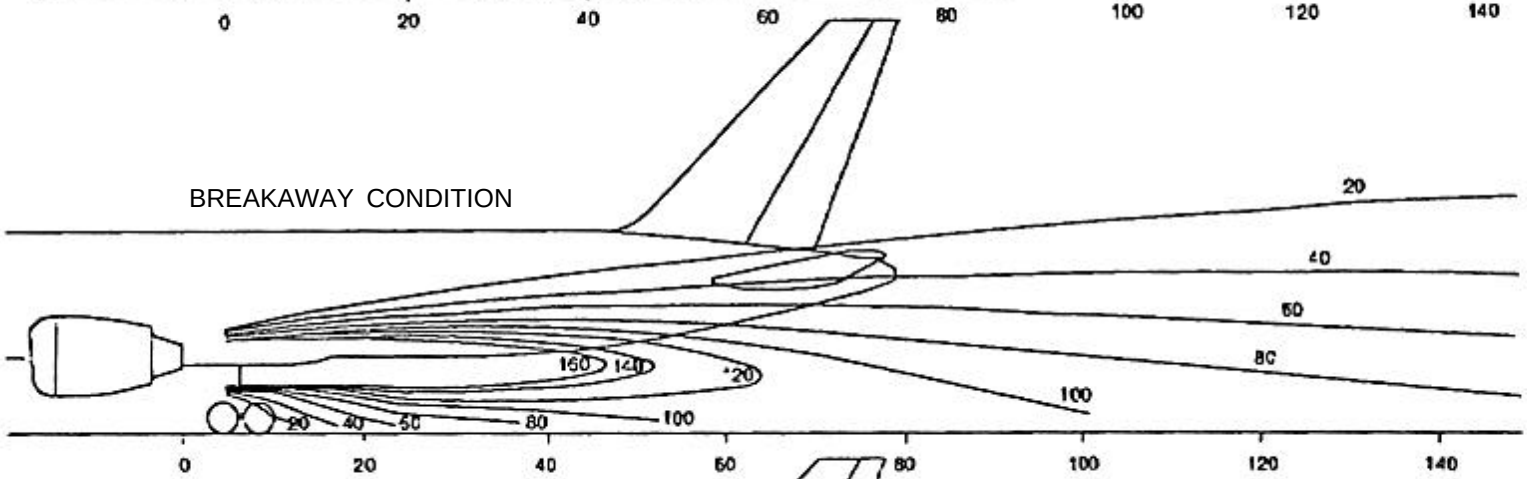

MAXIMUM TAKEOFF CONDITION

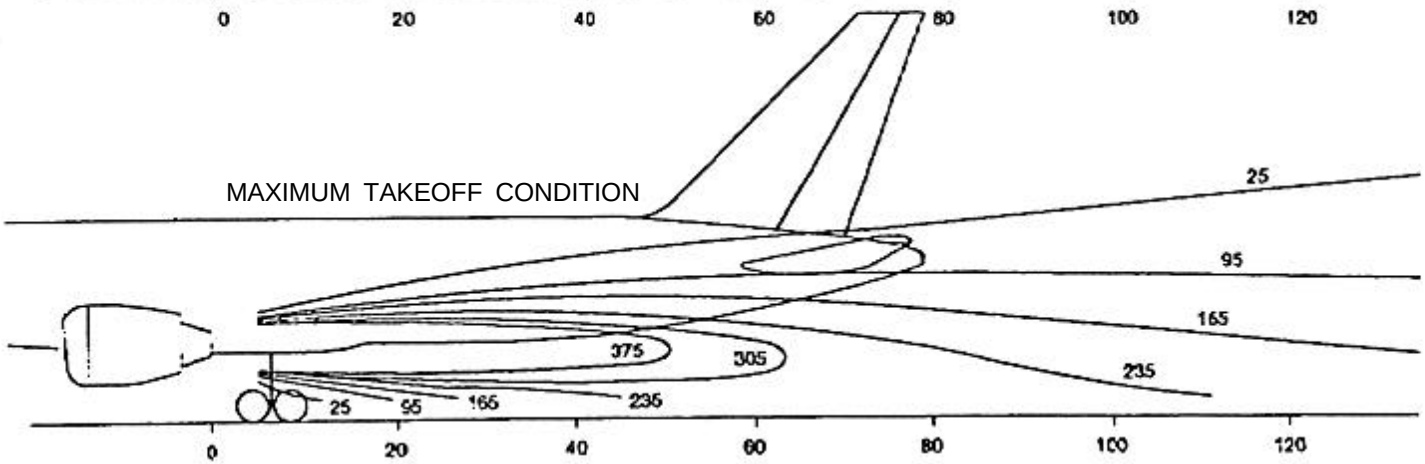

AIRCRAFT HAZARDS-Continued

AUXILIARY POWER UNIT EXHAUST WAKE

NOTE:

Measurement in feet.

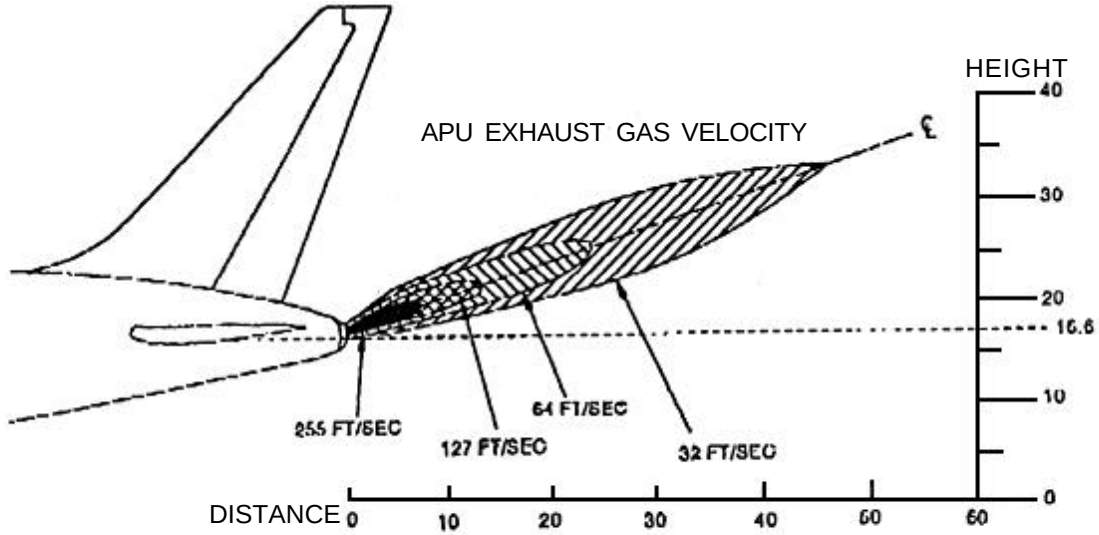

FT/SEC -MPH X 1.487
1 MPH = 1.609 KM/HR

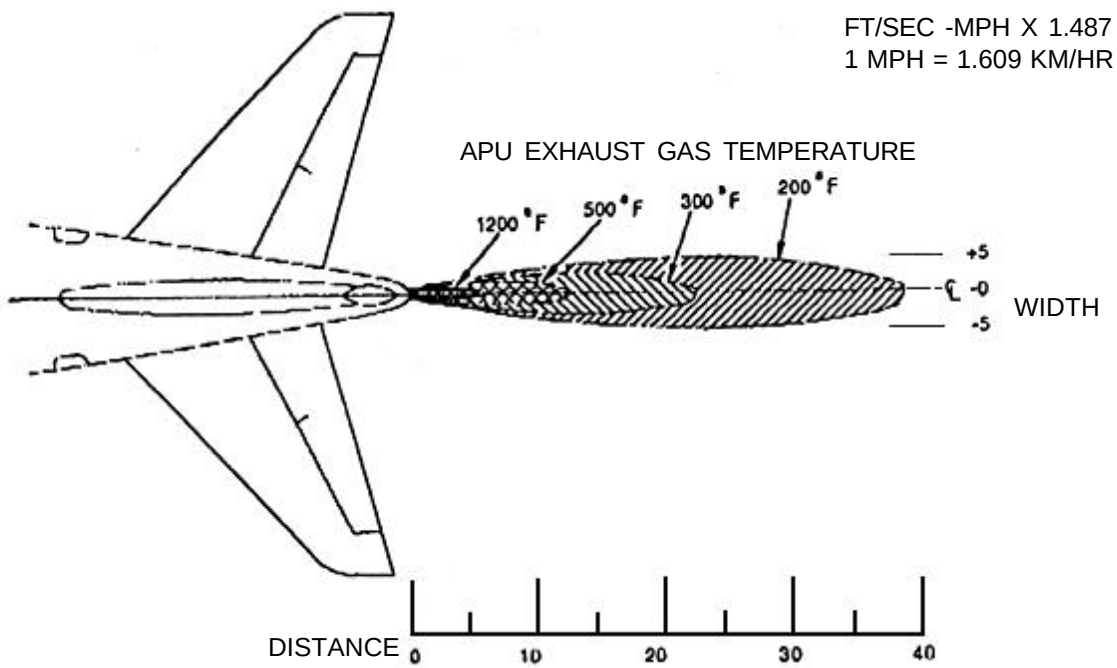

AIRCRAFT HAZARDS-Continued

JET ENGINE NOISE AREAS

NOTE:

_____	1,969 LBS OF THRUST
----------	6,300 LBS OF THRUST
- - - - - - - - - -	36,800 LBS OF THRUST

METRIC CONVERSION: 1FT= .3048M
1LB= 0.4536KG

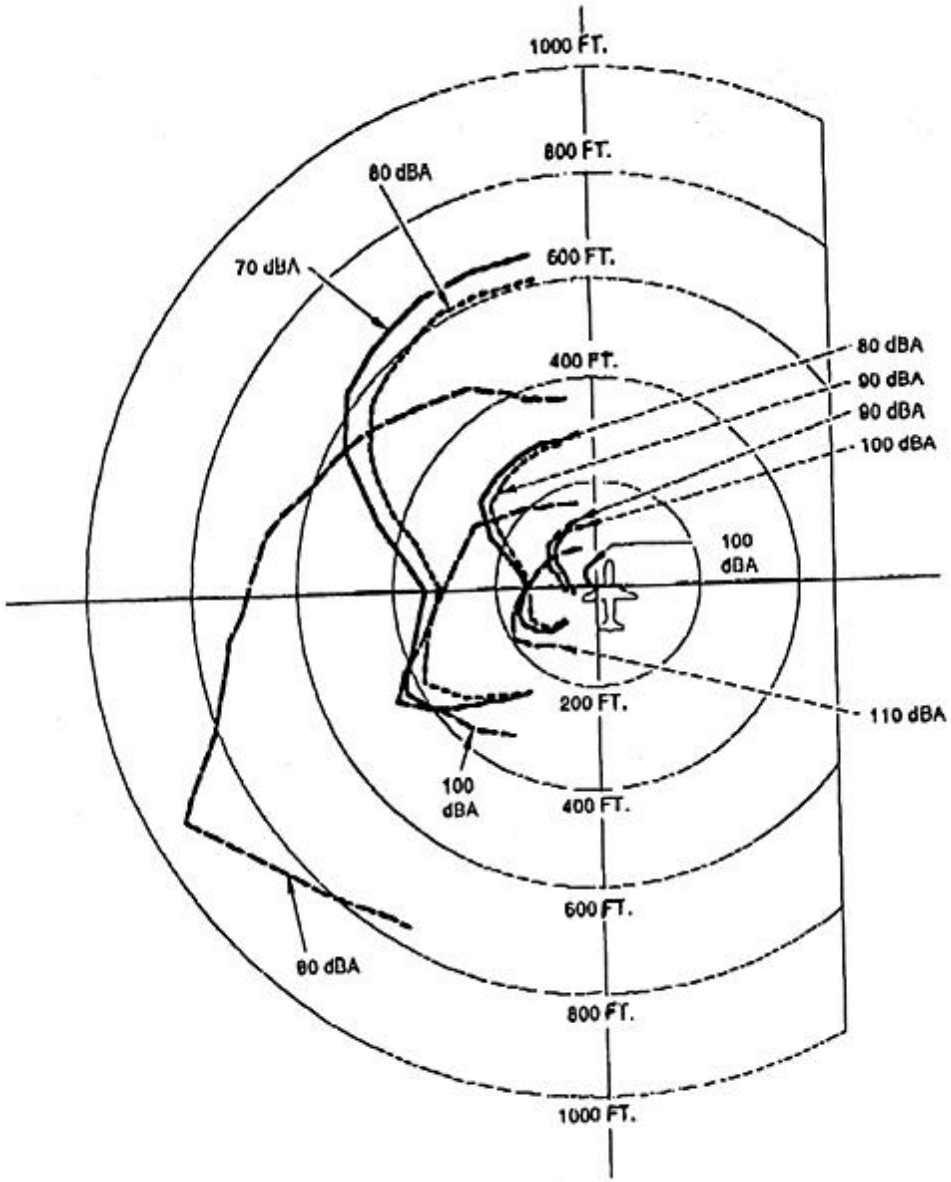

AIRCRAFT HAZARDS-Continued

FIRE EXTINGUISHING SYSTEM PYROTECHNIC CARTRIDGES AND LOCATIONS

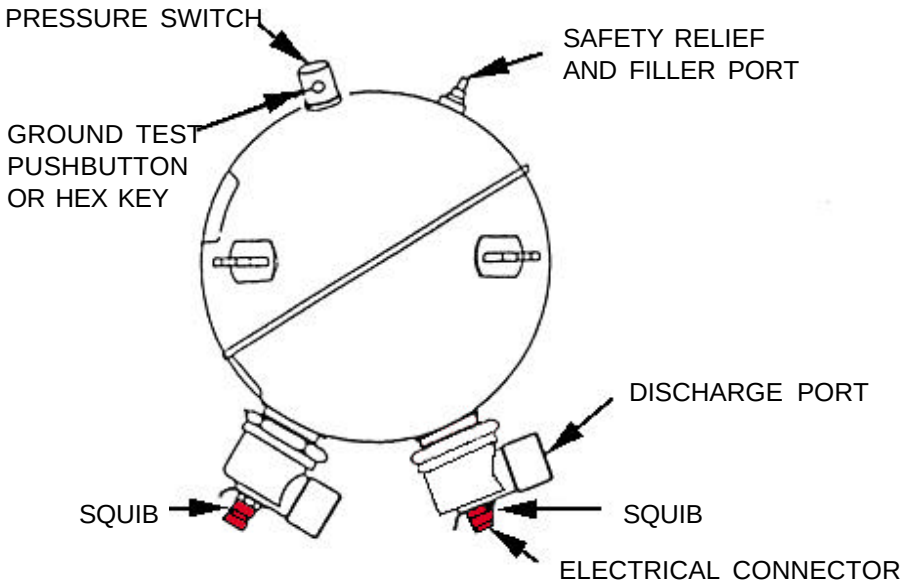

TYPICAL FIRE EXTINGUISHER BOTTLE

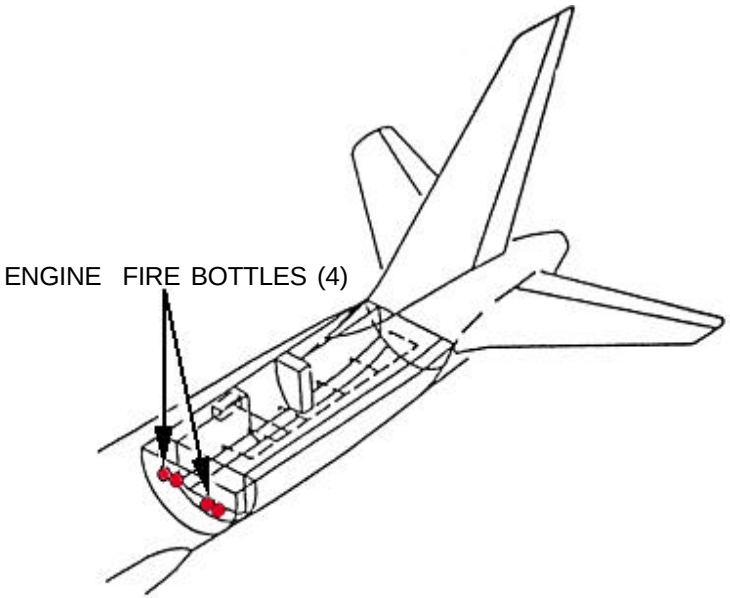

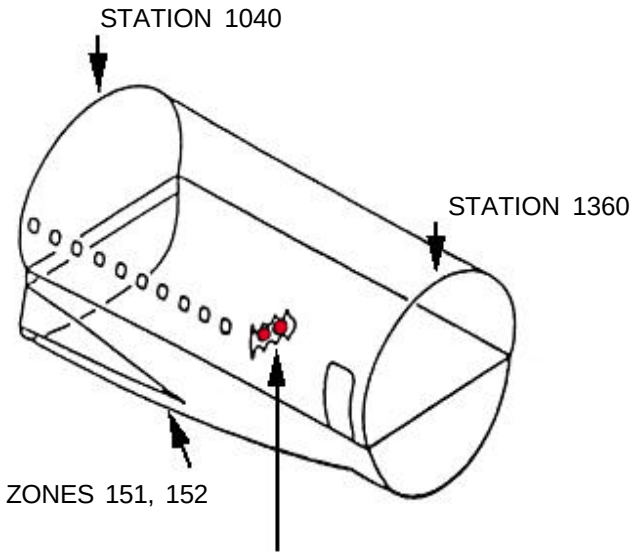

CARGO FIRE BOTTLES (2)

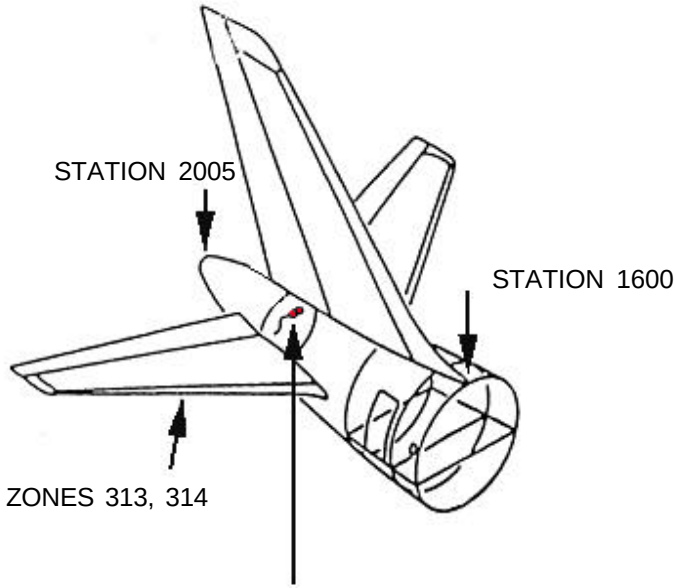

APU FIRE BOTTLES (2)

AIRFRAME MATERIALS

STRUCTURE AND COMPOSITES

NOTE:

The airframe materials for the C-32A are titanium, titanium alloy, carbon fibre, carbon-reinforced aramid-fiberglass, aramid and carbon epoxy preimpregnated raw material.

LEGEND:

LE Leading edge
TE Trailing edge

- CARBON-ARAMID (HYBRID)
- ARAMID
- CARBON-ARAMID-FIBERGLASS (HYBRID)

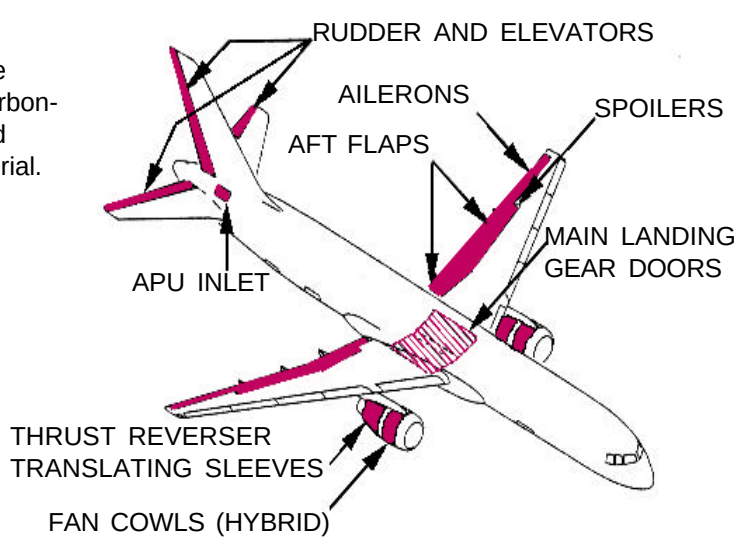

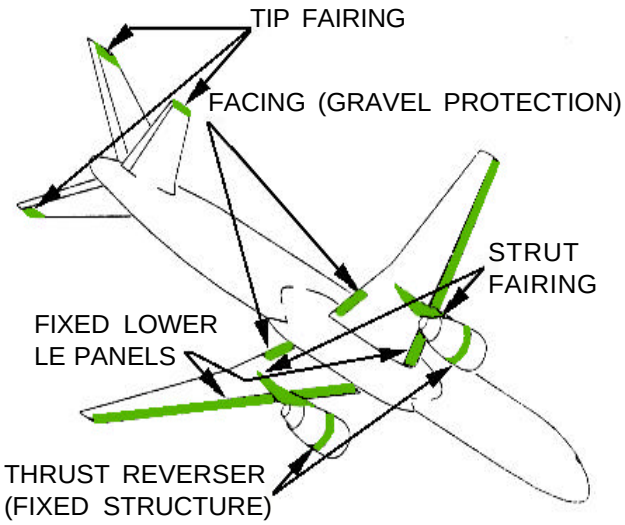

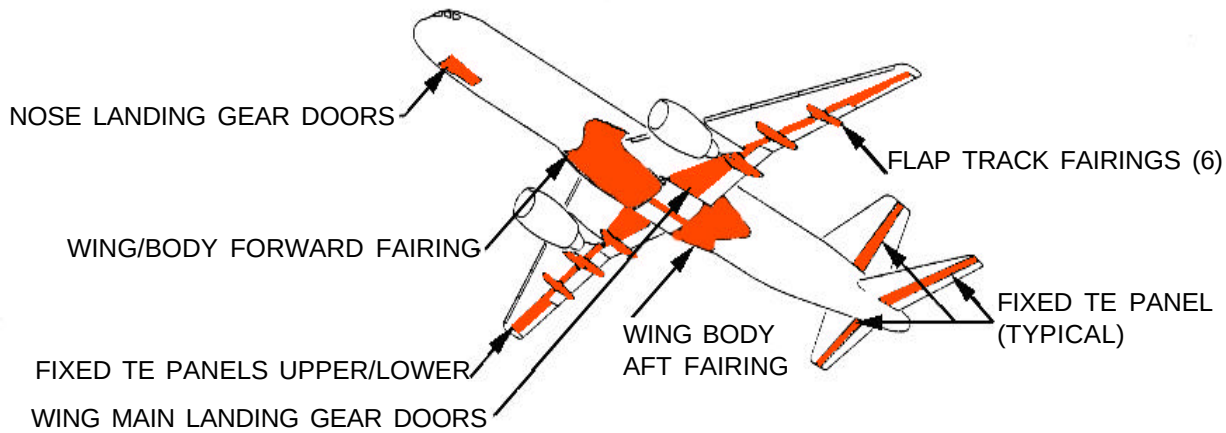

EMERGENCY RESCUE ACCESS

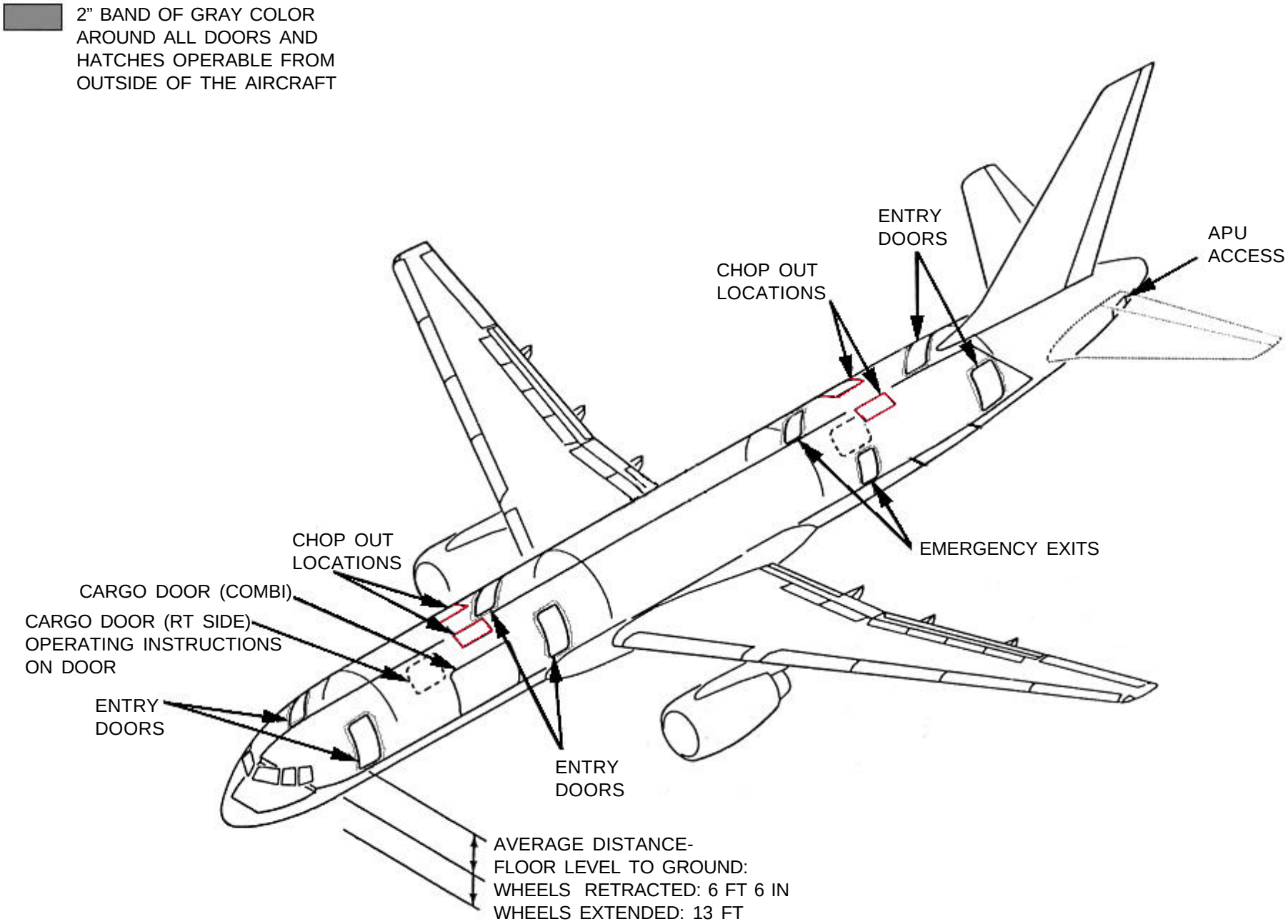

EXTERIOR ARRANGEMENT

ANTENNA LOCATIONS

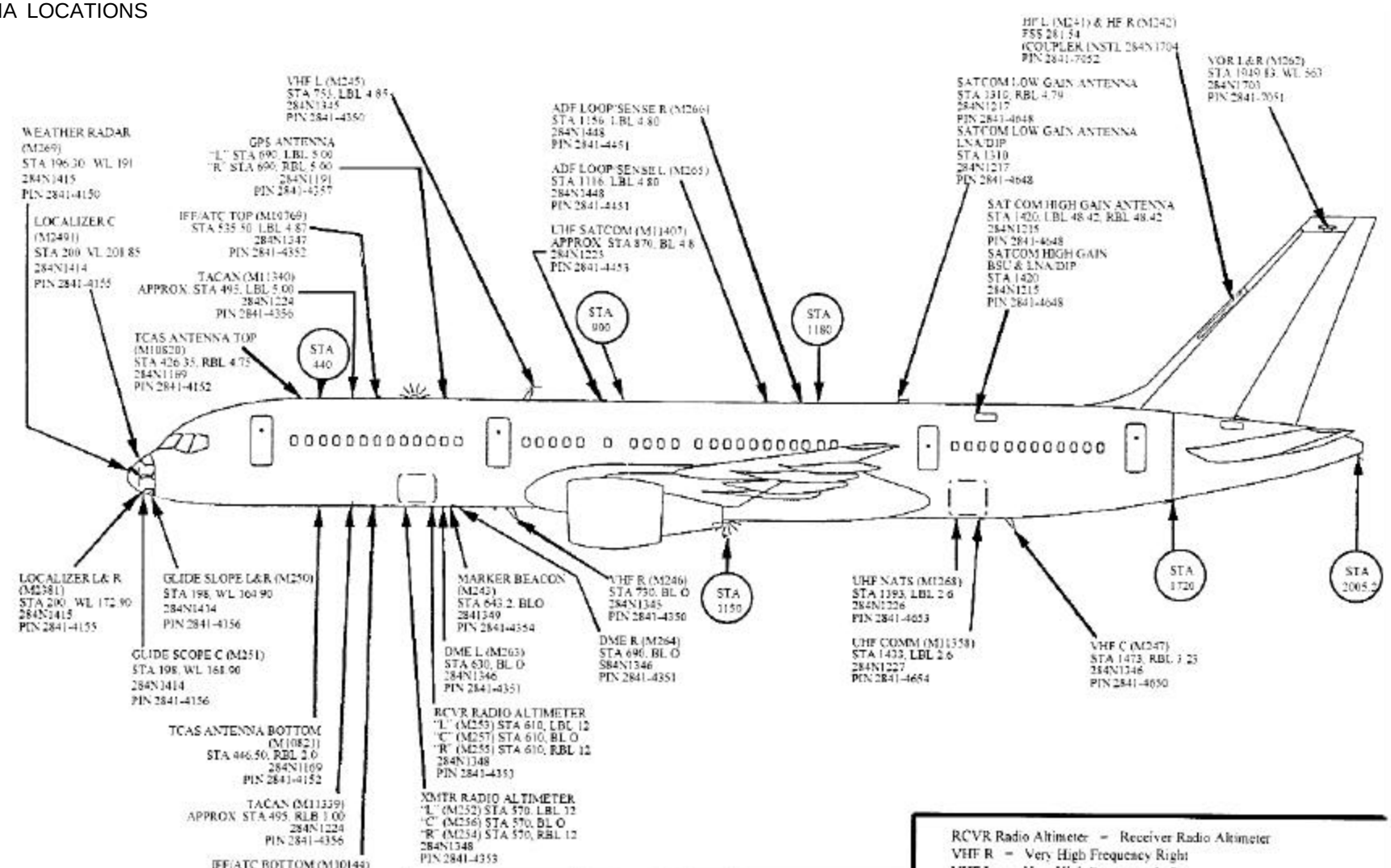

ANTENNA LEGEND:

Localizer C = Localizer Center
Localizer L = Localizer Left
Localizer R = Localizer Right
Weather Radar = Weather Radar
Glide Scope C = Glide Scope Center
Glide Scope L = Glide Scope Left
Glide Scope R = Glide Scope Right
TCAS Antenna Bottom = Traffic Collision Avoidance Bottom
TCAS Antenna Top = Traffic Collision Avoidance Top
TACAN = Tactical Air Navigation
IFF/ATC Bottom = Identify Friend or Foe/Air Traffic Control Bottom
IFF/ATC Top = Identify Friend or Foe/Air Traffic Control Top
DME L = Distance Measuring Equipment Left
DMEL = Distance Measuring Equipment Right
RCVR Radio Altimeter = Receiver Radio Altimeter
VHF R = Very High Frequency Right
VHF L = Very High Frequency Left
NATS = North Atlantic Track System
UHF = Ultr High Frequency
VHF C = Very High Frequency Center
GPS = Global Positioning System
ADF = Automatic Direction Finder
UHF SATCOM = Ultra High Frequency Satelite Communication
HF L = High Frequency Left
HF R = High Frequency Right
VOR L = VHF Omni Range Left
VOR R = VHF Omni Range Right

INTERIOR ARRANGEMENT AND CAPACITY

56 TOTAL PASSENGERS WITH 7 ATTENDANTS

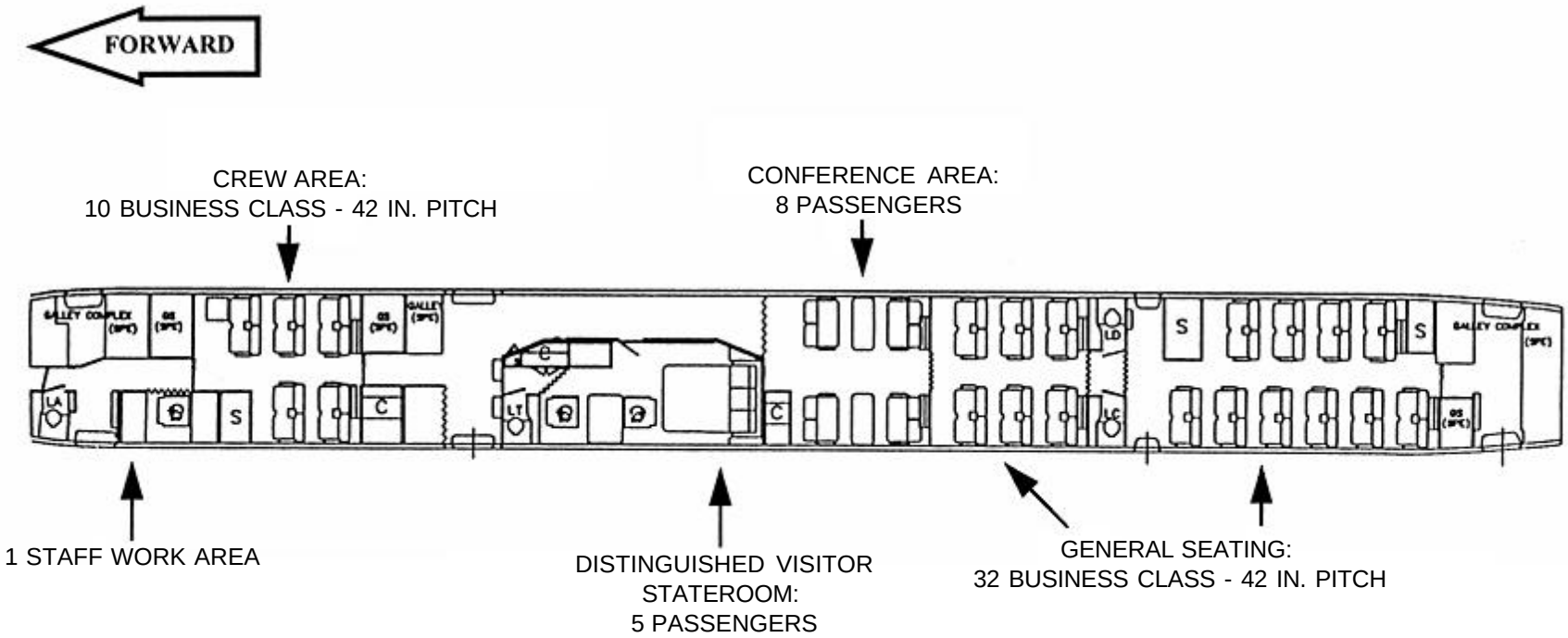

LOWER CARGO DOORS AND COMPARTMENTS

NOTE:

Measurements are given in inches (centimeters).

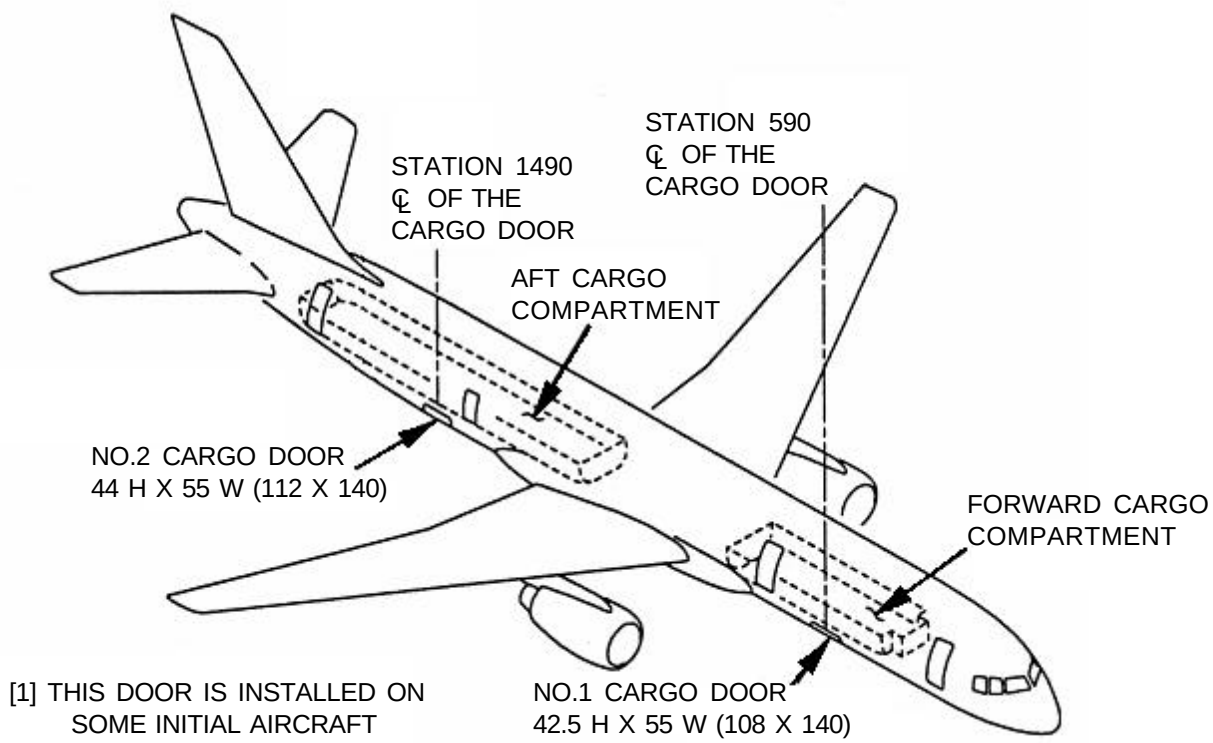

[1] THIS DOOR IS INSTALLED ON SOME INITIAL AIRCRAFT

SPECIAL TOOLS/EQUIPMENT
Power Rescue Saw
35 Foot Ladder
Fire Drill II

AIRCRAFT ENTRY

1. NORMAL/EMERGENCY

a. To open entry and service doors: push handle release latch.
b. Pull butterfly handle from recess and rotate 180 degrees in direction of “open” arrow.
c. Pull door outward.
d. To open overwing escape hatches (if installed): lift lower portion of handle away from the side of the aircraft.
e. Continue to raise handle to the pull up position.
f. Push hatch inward and upward.
g. To open number 3 emergency exit: push on “push” panel to gain access to handle.
h. Pull handle forward and outward.

NOTE:

- Escape slide disarms automatically when door or hatch is opened from the outside, except No. 3 emergency exit.
- Cockpit windows cannot be opened from the outside.

2. CUT-IN

a. Cut along window lines as last resort.

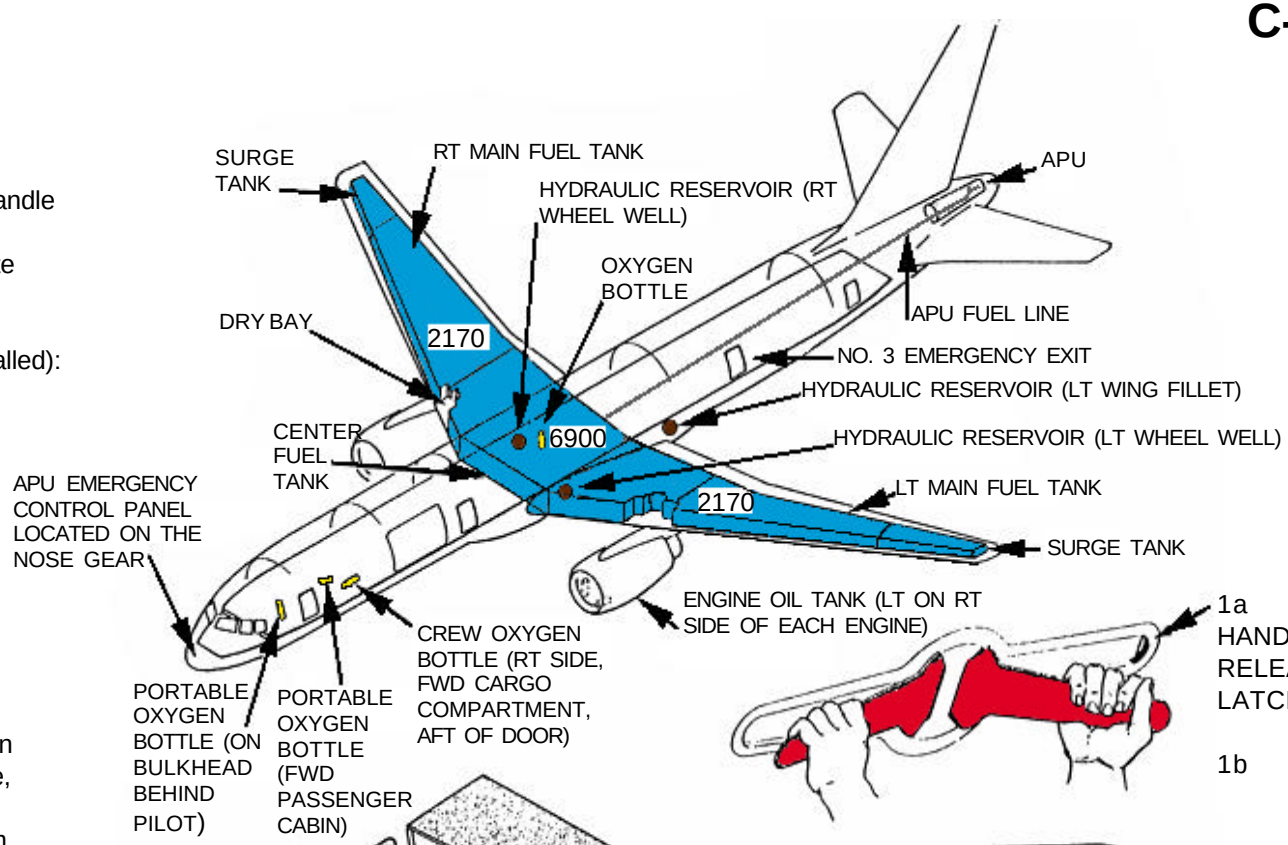

1a HANDLE RELEASE LATCH

1b

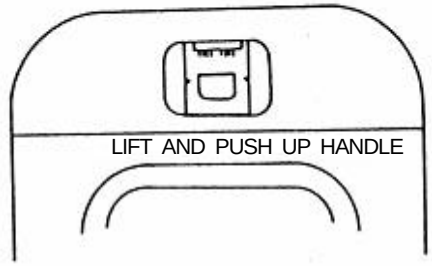

1d

1g, 1h

WARNING: FOR EMERGENCY USE ONLY
Stand to side of door and pull handle. Door falls outward and down. Escape slide inflates immediately.

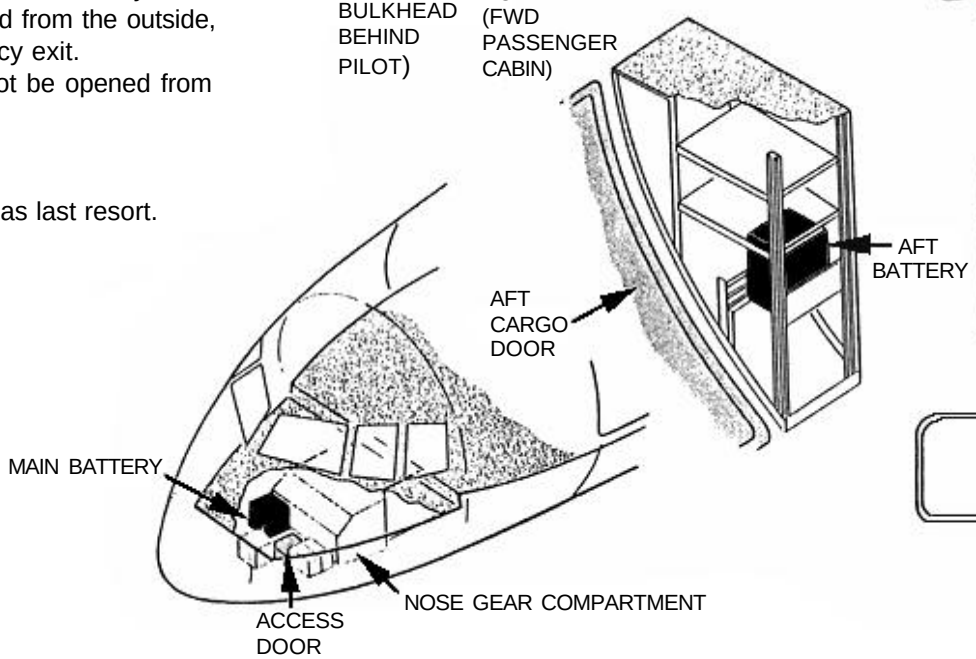

ENGINE, APU SHUTDOWN AND AIRCREW EXTRACTION

1. ENGINE SHUTDOWN

a. Retard thrust levers, located on pilot's center console, to RETARD position.

b. Place fuel control switches, located on pilot's center console under thrust levers, to CUT OFF position.

c. In case of engine fire, pull engine fire switches, located on pilot's center console. Turn left or right to release agent. If not illuminated, push and hold the button under the switch to release.

d. In case of APU fire, pull APU fire switch, located on pilot's center console to the right of the engine fire switches. Turn switch up or down to release agent. If not illuminated, push and hold the button under the switch to release.

e. Rotate APU control switch, located on pilot's overhead panel to OFF.

f. Press battery switch, located on pilot's overhead center panel left side, to OFF.

2. AIRCREW EXTRACTION

a. Unlatch lap belts and remove shoulder harness from crewmembers.

b. Depress control handles and rotate flight engineer's seat from left to right.

c. Passenger seats are equipped with lap belts only.

NOTE:
If seat tracks are not damaged during crash landing, use adjustable seat control to retract seats to aft position.

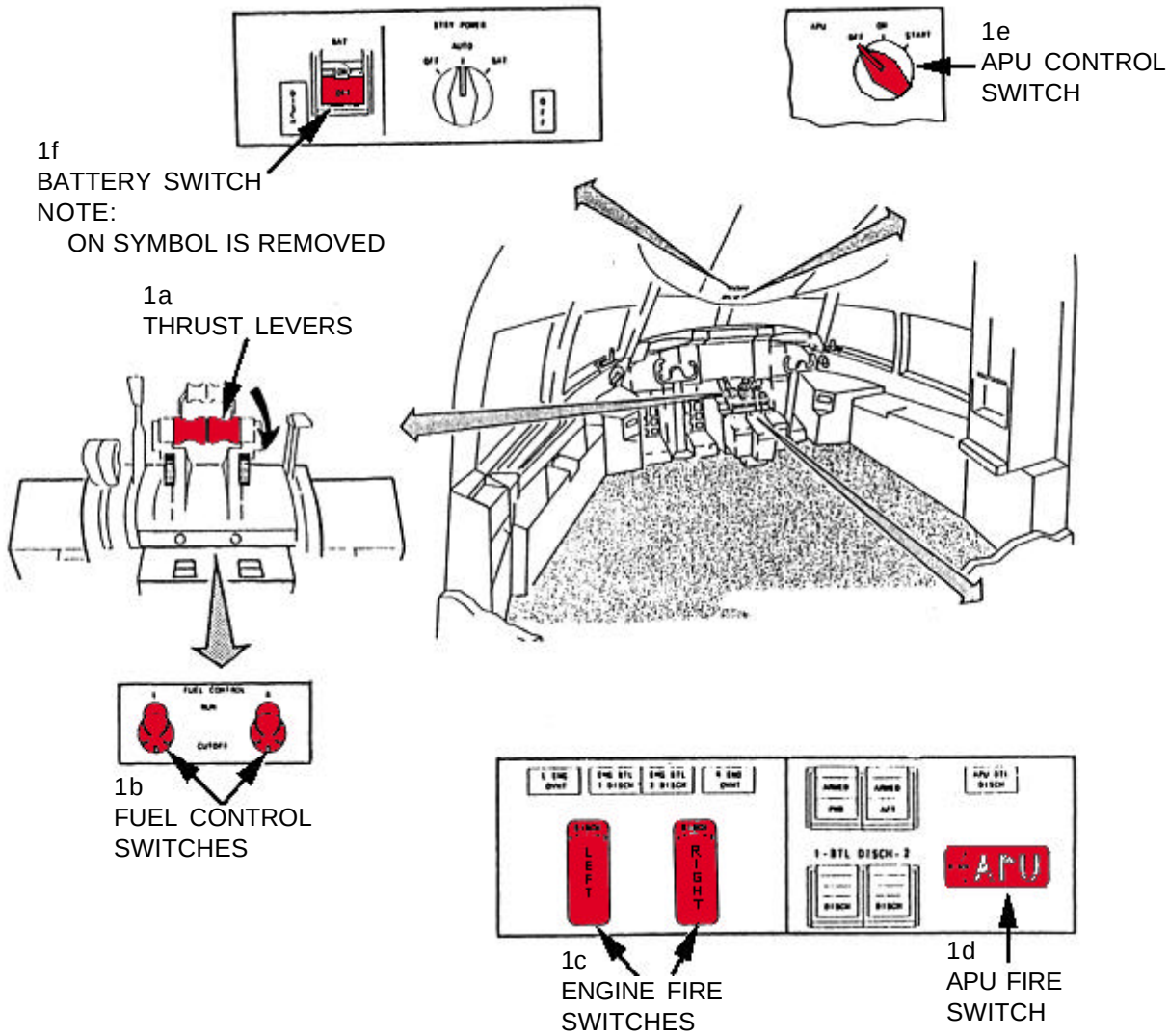

CRITICAL SWITCH LOCATIONS AND THEIR OPERATION ARE SHOWN WITH THE EXPANDED VIEWS OF THE CONTROL MODULES

AIRCRAFT PAINT SCHEME

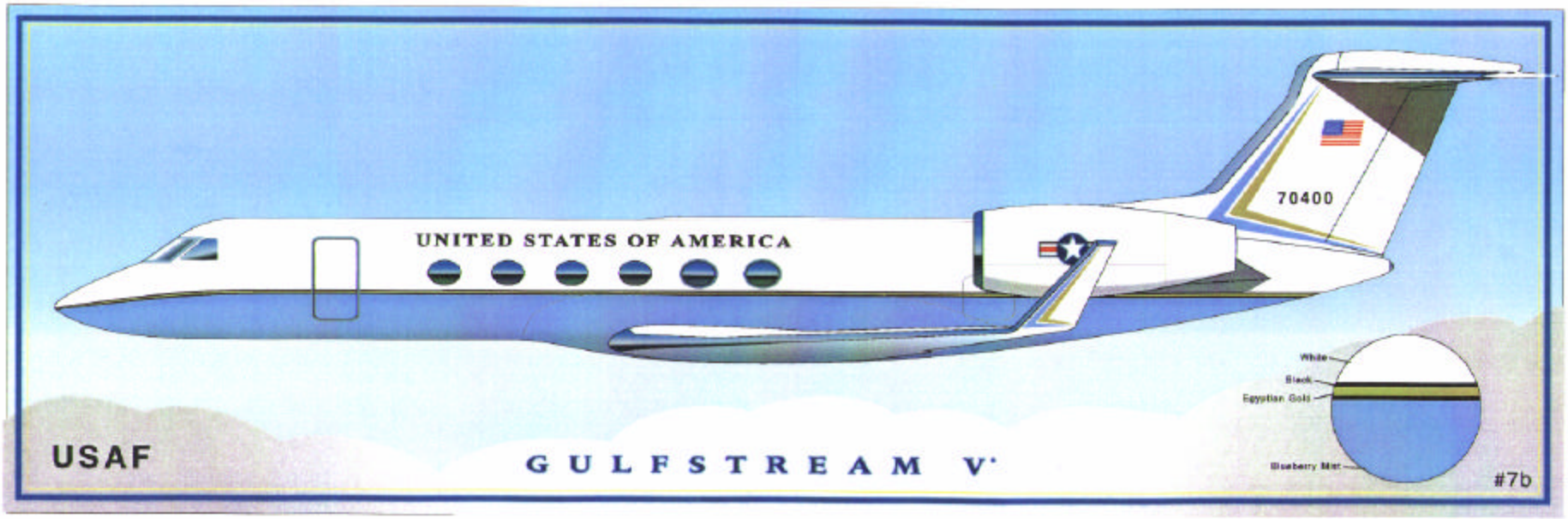

AIRCRAFT DIMENSIONS

GENERAL DATA	
Wing Area	1136.5 Sq. Ft.
Aspect Ratio	6.89
Quarter Chord Sweep	27.00 degrees
Taper Ratio	0.268
MAC	171.19 In.
Horizontal Tail Area	260.85 Sq. Ft.
Vertical Tail Area	155.00 Sq. Ft.
Cabin Length	51.08 Ft.
Total Volumn	1,902 Cu. Ft.
Cabin Volumn	1,681 Cu. Ft.
Engine	(2ea) BR710-48
Takeoff Thrust - SLS	14,465 lb. (Installed)
Max Takeoff Gross Wt.	89,000 lb
Max Zero Fuel Wt.	53,300 lb
Max Usable Fuel Wt.	41,000 lb
Manf''s Bare Wt. Empty	38,000 lb

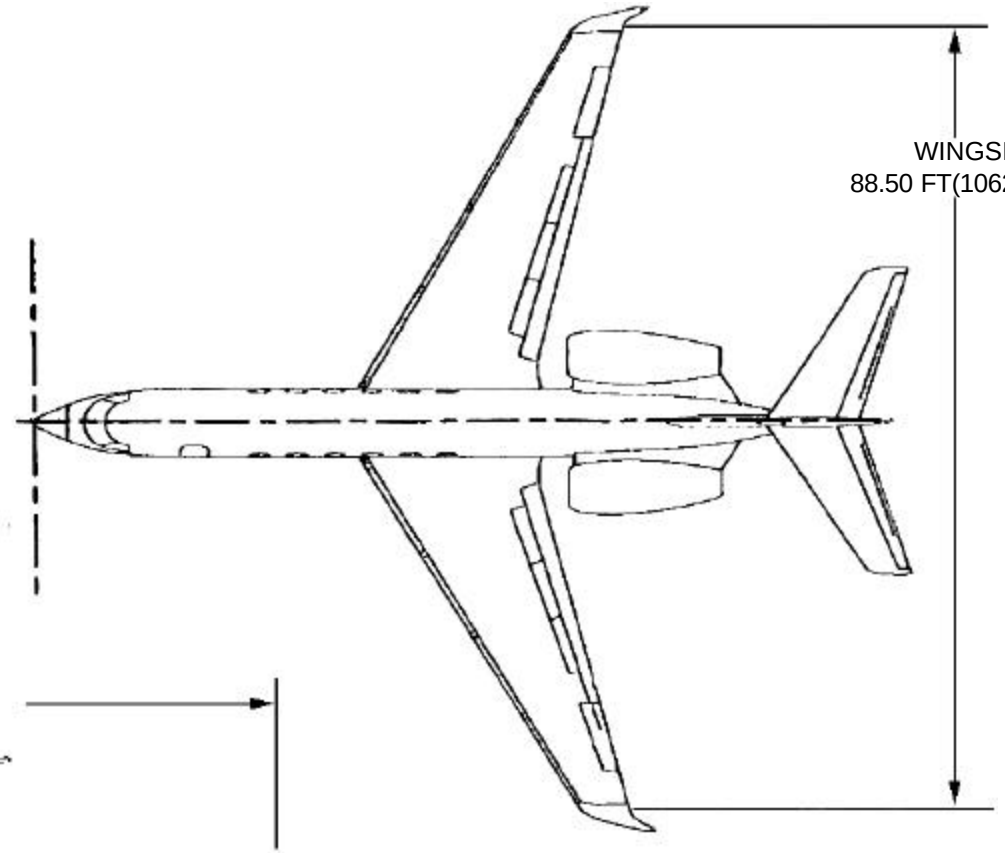

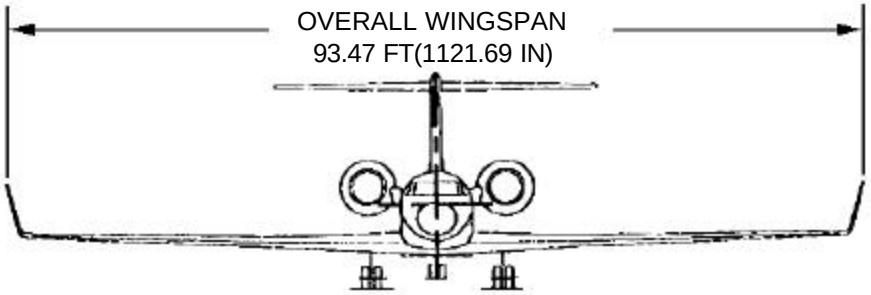

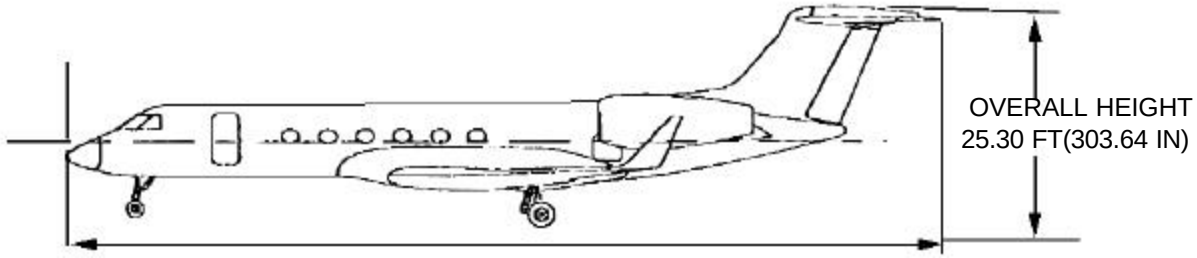

AIRCRAFT DANGER AREAS

INLET AND EXHAUST

NOTE:

- The C-37A is a Gulfstream V airframe modified for USAF missions, similiar to the C-20. Its purpose is a Presidential, VP, or VIP, small airframe carrier. It will land where Air Force One or the C-32A (757-200) can not.

- Depending on the type of operation being carried out, the following areas of the aircraft are to be considered danger or caution areas. These areas are intended as a general reference for ramp and rescue personnel.

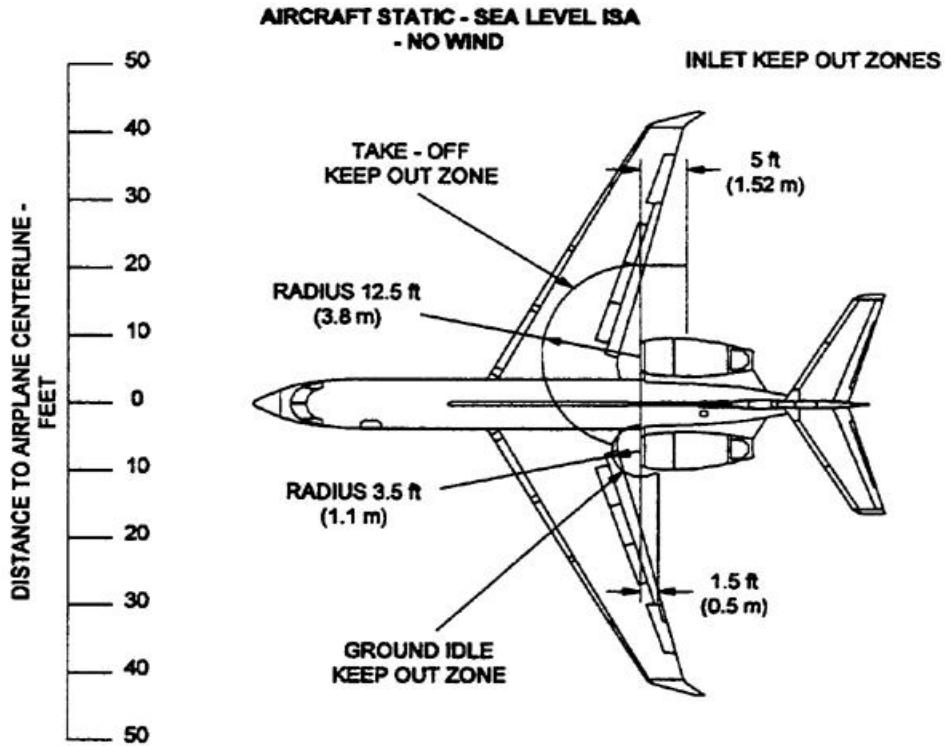

BMW Rolls-Royce AeroEngine

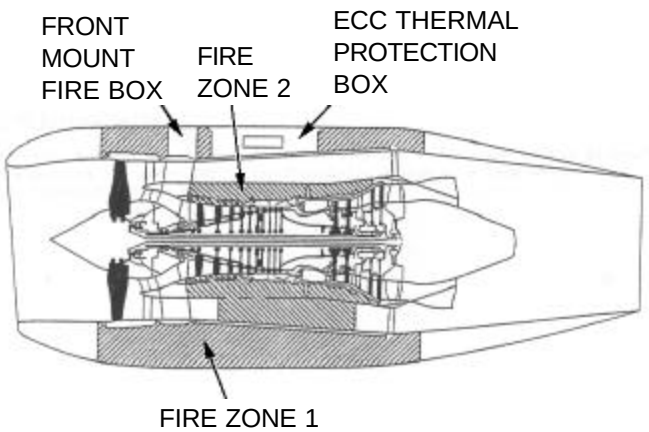

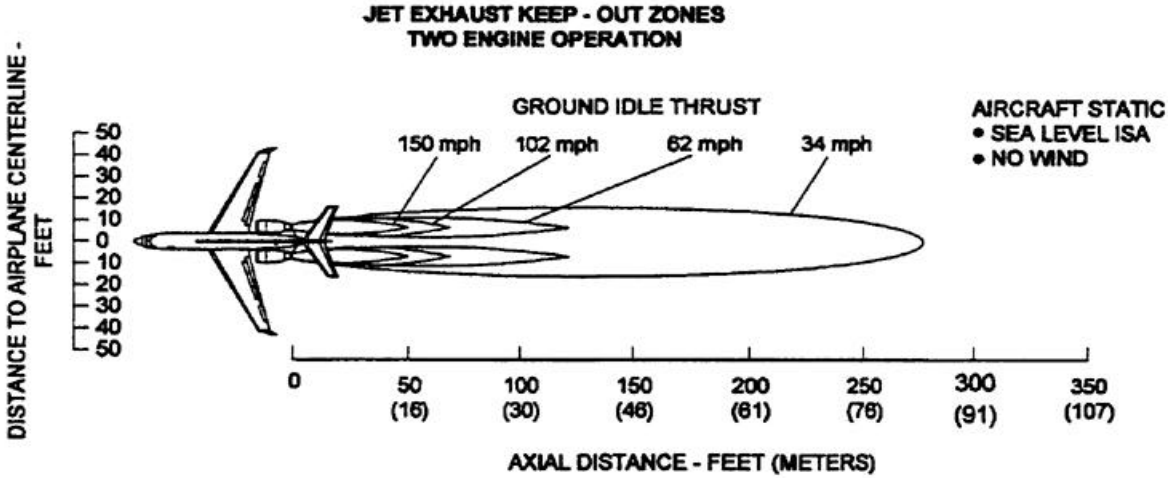

AIRCRAFT DANGER AREAS

HF-9000 AND RADAR DANGERS

WARNING

The *HF-9000 High-Frequency Communications System can cause serious burns from direct contact when the system is transmitting. Do not touch the RF output terminal on the antenna coupler, the antenna lead-in wire, the insulated feedthrough, or the antenna itself. When operated into an antenna, it may produce electromagnetic fields near the antenna that exceed OSHA recommended maximum limits.

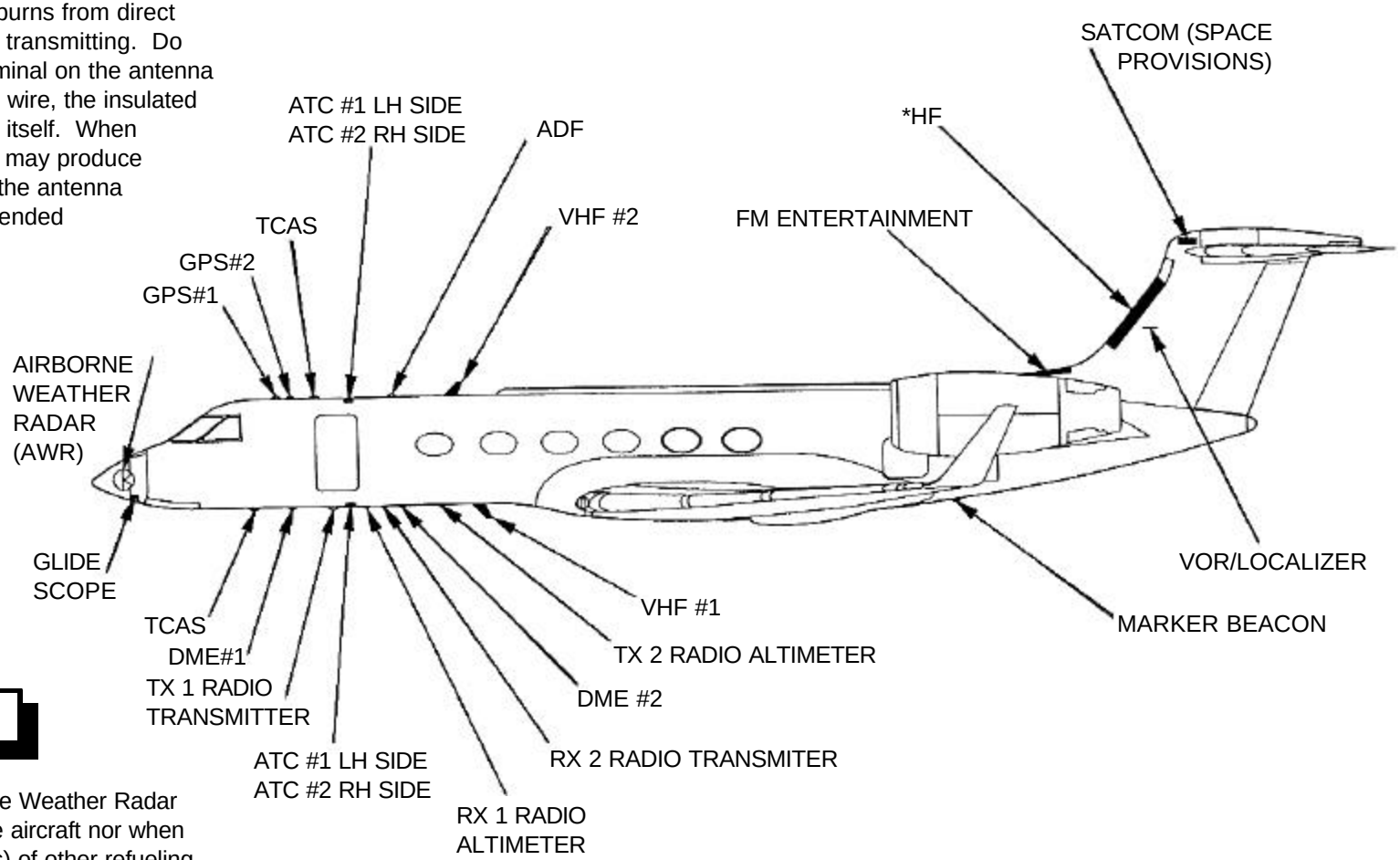

WARNING

DO NOT operate the Airborne Weather Radar (AWR) during refueling of the aircraft nor when within 300 feet (91.44 meters) of other refueling operations.

WARNING

DO NOT operate the AWR within 15 feet (4.57 meters) of ground personnel or containers holding flammable or explosive material.

AIRFRAME MATERIALS

NOTE:

Ailerons on A/C 521 & 542 are metal-riveted sheet metal.

NOTE:

Composite materials are used extensively on this aircraft (Gulfstream V) to save weight and increase strength. Composite materials include metallic and non-metallic structures for bulkheads, doors, flight controls, floor panels, fairings, nacelles, panels, pylons, radome, tailcone, and winglets.

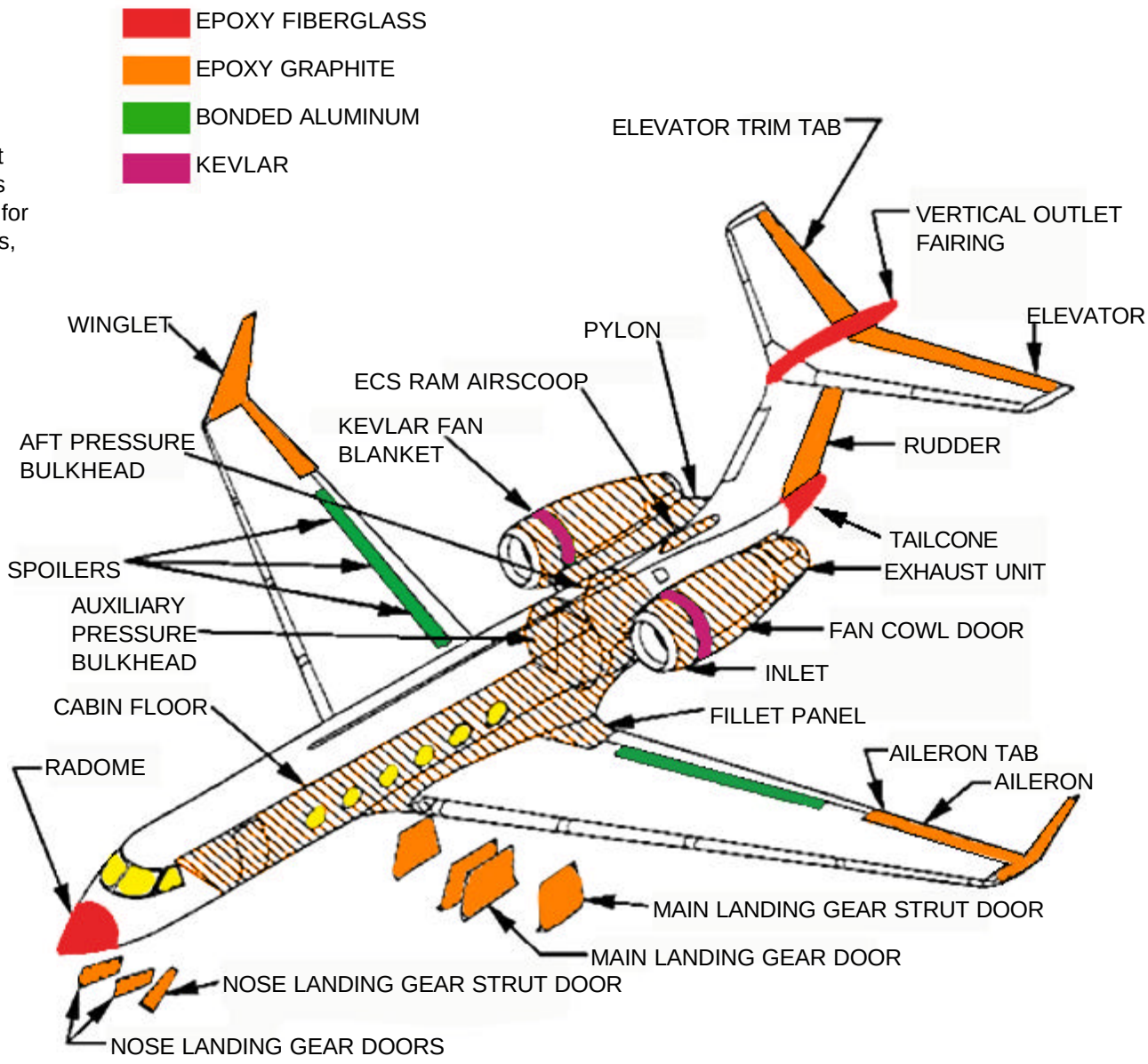

FLAMMABLE FLUIDS AND COMPONENTS

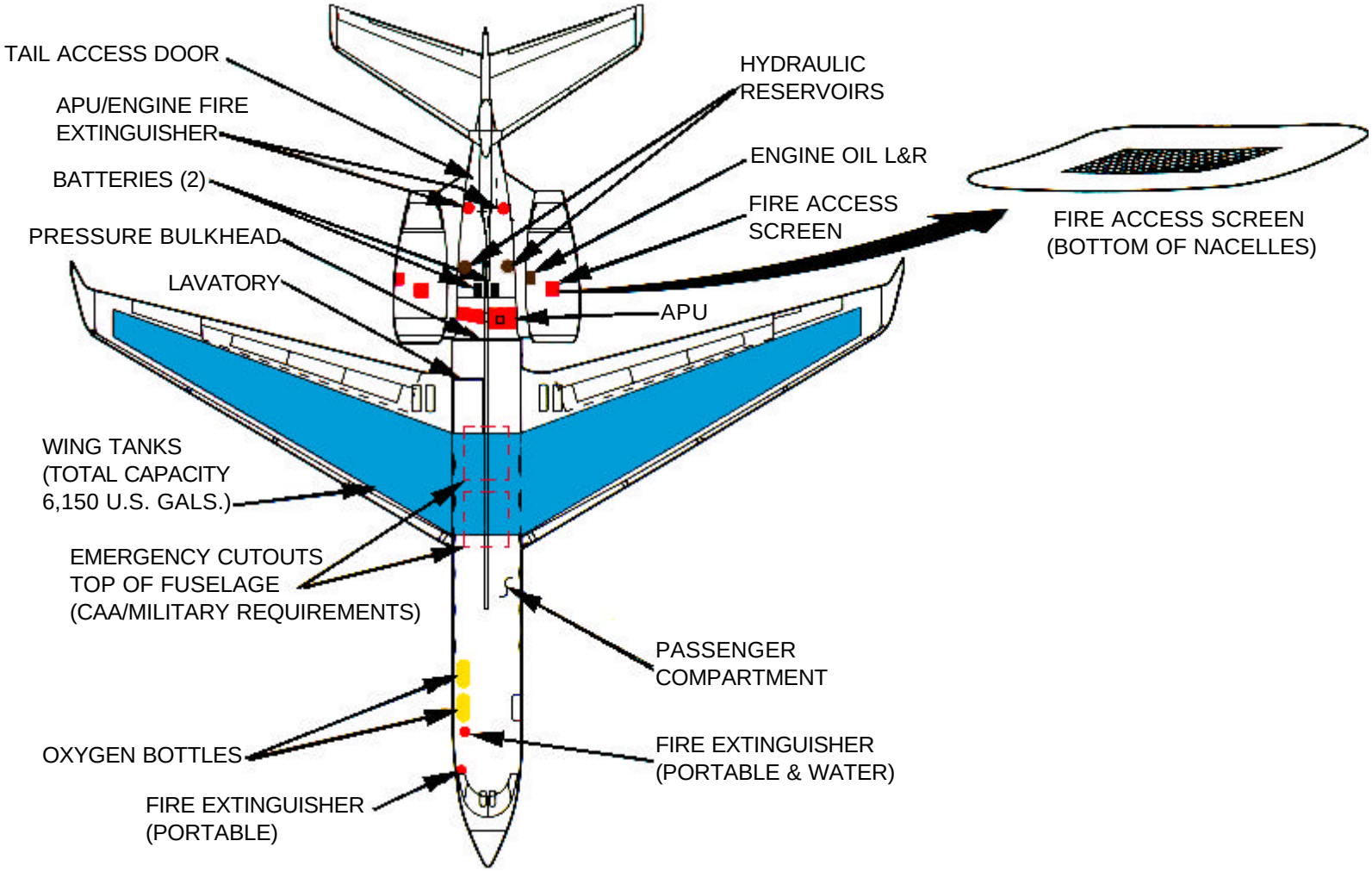

SPECIAL TOOLS/EQUIPMENT
Power Rescue Saw
12 Foot Ladder
Fire Drill II

AIRCRAFT ENTRY

1. NORMAL ENTRY
a. Push inner latch handle.

b. Pull out latch handle.

WARNING

Door is hinged at bottom and will fall open rapidly, especially if door was closed manually without hydraulic pressure.

c. Pull door open.

d. Main door will not open fully with landing gear up.

2. EMERGENCY ENTRY

NOTE:
Two emergency exits are located on each side of the aircraft.

a. Push button to open access panel.

b. Pull handle, located inside access panel up to release window and push window in.

3. CUT-IN

CAUTION

Windshield panels cannot be chopped or broken out.

a. Cut fuselage as required.

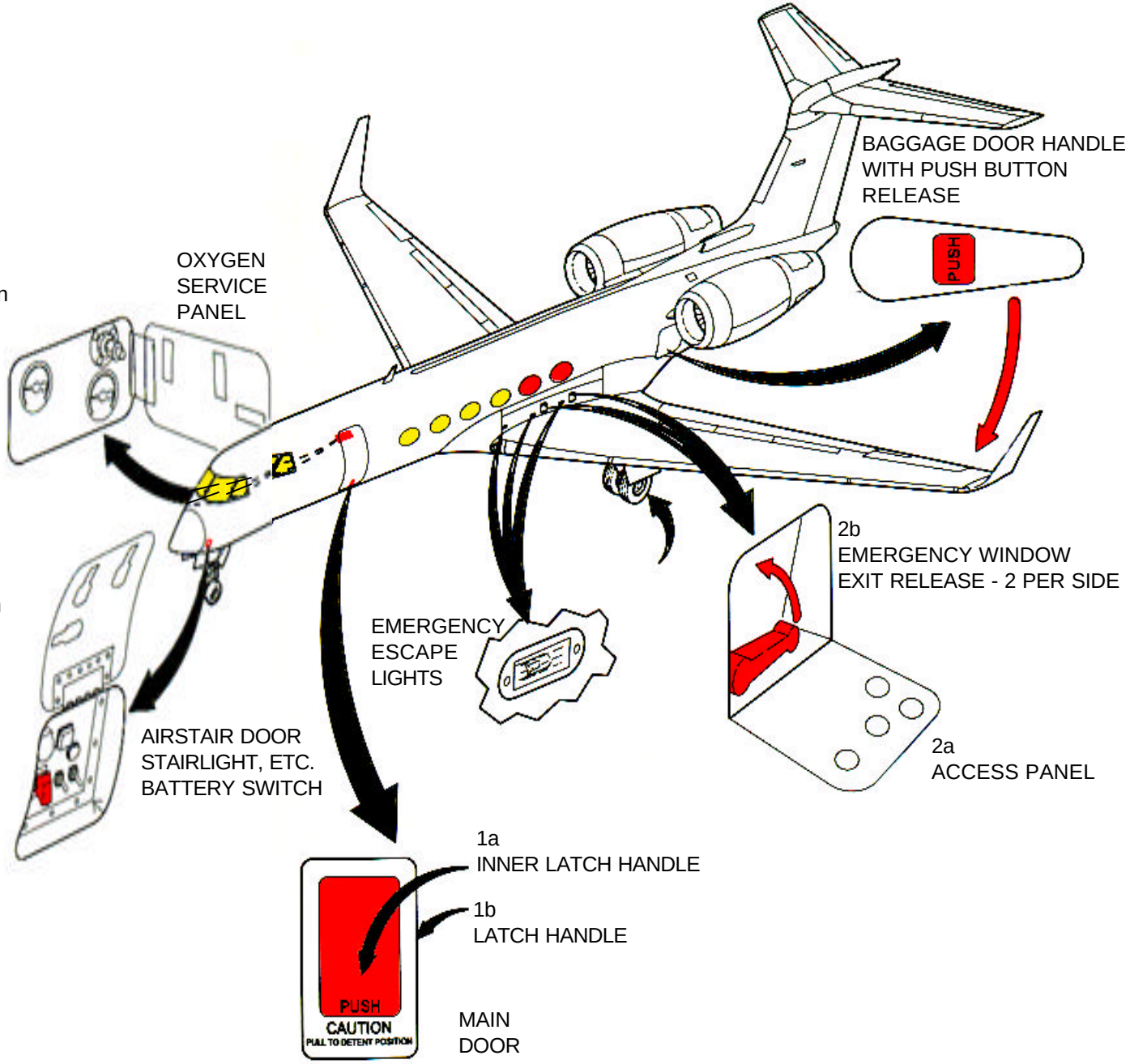

AIRCRAFT ENTRY-Continued

MAIN ENTRANCE DOOR, INTERIOR AND EXTERIOR BAGGAGE COMPARTMENT DOORS

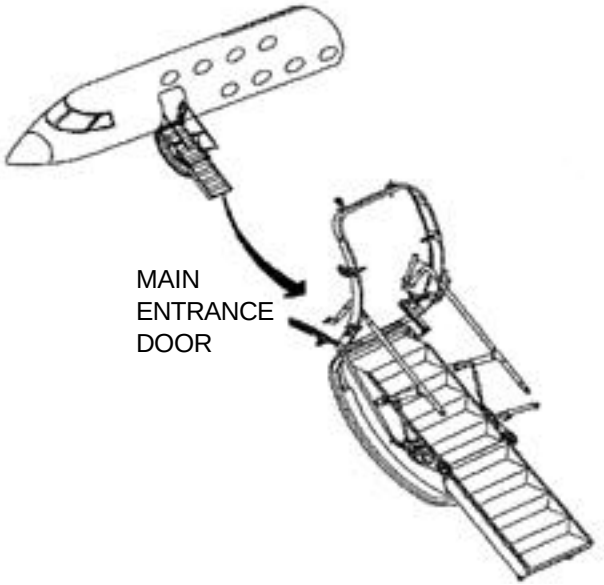

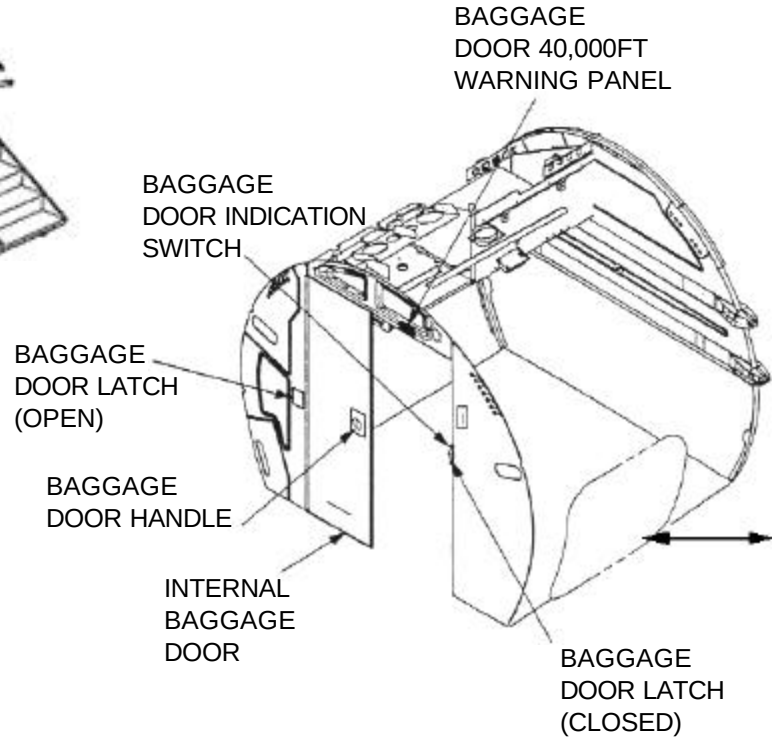

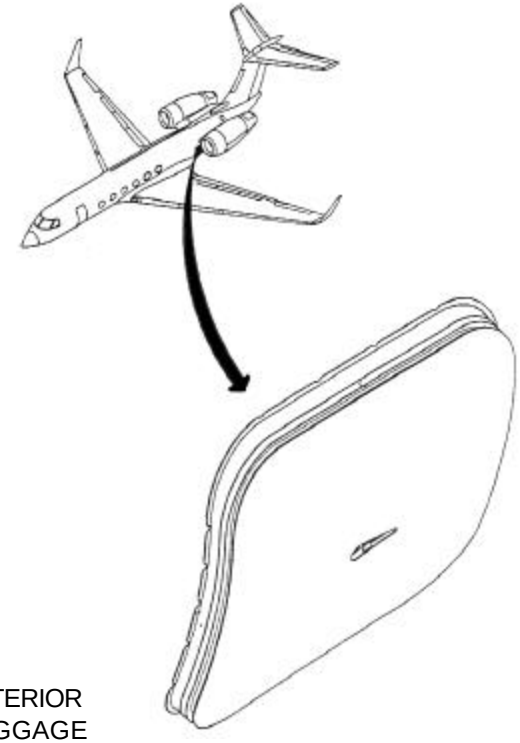

ALTERNATIVE ENTRY INTO AIRCRAFT BY USING EXTERIOR AND INTERIOR BAGGAGE COMPARTMENT DOORS

AIRCRAFT ENTRY-Continued

TAIL COMPARTMENT AND LADDER

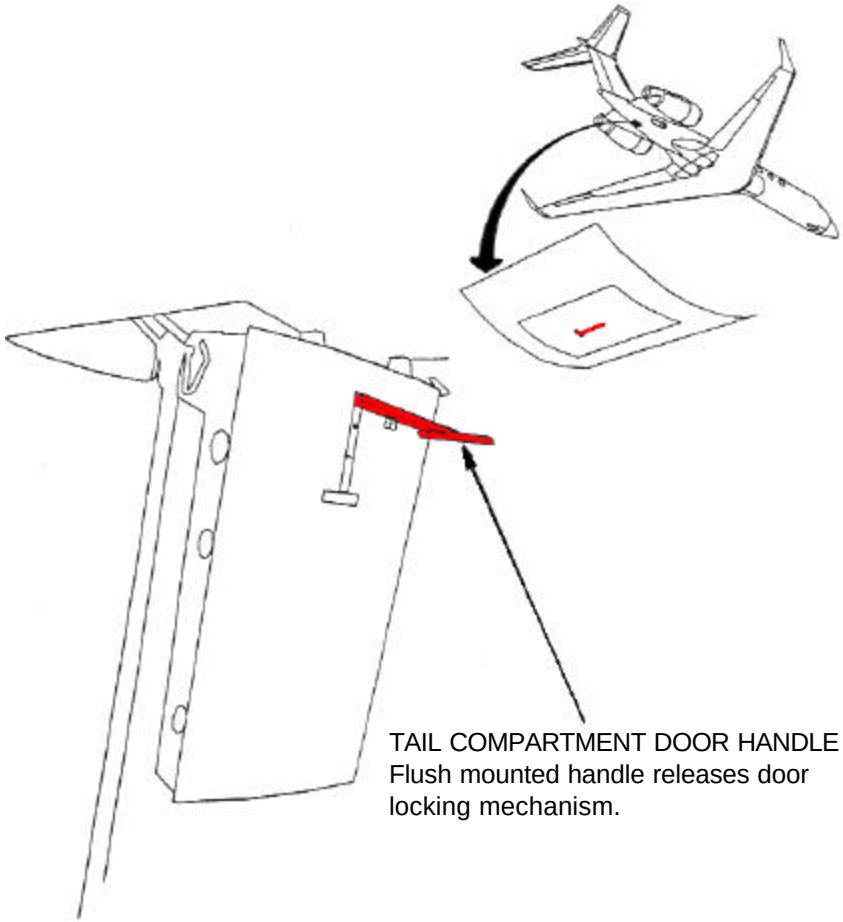

TAIL COMPARTMENT DOOR HANDLE
Flush mounted handle releases door locking mechanism.

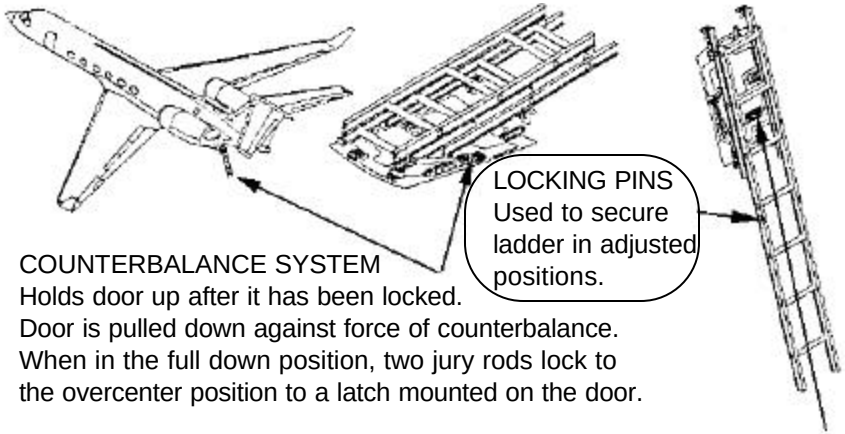

LOCKING PINS
Used to secure ladder in adjusted positions.

COUNTERBALANCE SYSTEM
Holds door up after it has been locked.
Door is pulled down against force of counterbalance.
When in the full down position, two jury rods lock to the overcenter position to a latch mounted on the door.

LADDER INSTRUCTIONS

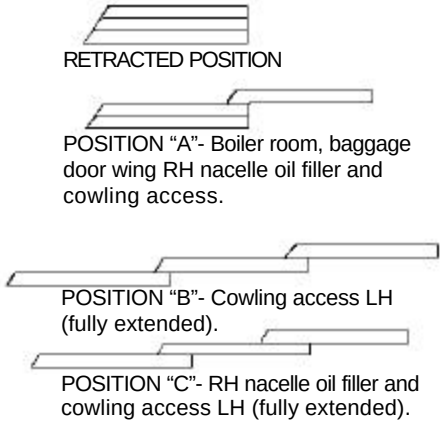

RETRACTED POSITION

POSITION “A”- Boiler room, baggage door wing RH nacelle oil filler and cowling access.

POSITION “B”- Cowling access LH (fully extended).

POSITION “C”- RH nacelle oil filler and cowling access LH (fully extended).

1. To lower ladder, remove 2 pip pins thru door brackets at lower end of door.
2. Lift ladder up and aft to clear latch housing, then lower.
3. Lower bottom extension and reinstall pip pins thru door brackets.
4. To remove ladder, follow step 1 and 2, then lower. Ladder tracks are aligned with rollers, then pull.

ENGINE AND APU SHUTDOWN

NOTE:

Each fire handle is capable of rotation to two positions after placement in the OUT position. The positions are labeled DISCH 1 for the right fire bottle and DISH 2 for the left fire bottle. When it is necessary to discharge a fire bottle, ALWAYS use DISCH 1 first. This will discharge extinguishing agent from the RIGHT fire bottle, preserving the LEFT fire bottle for APU protection. Only the LEFT fire bottle can be used for APU protection.

NOTE:

The Fire Detection and Warning System detects overheat or fire in the engines, engine pylons, APU, and passenger/tail areas.

1. ENGINE and APU FIRES

NOTE:

Appropriate handle will be illuminated red indicating fire. Fire extinguishing systems receives its power from the main batteries. DO NOT push battery switches to OFF until engine/APU shutdown is complete.

a. In case of engine fire, pulling the fire L-handle located on the forward portion of the flightdeck center pedestal, shuts off the engine generator, fuel, hydraulic fluid to and from the associated engine.

b. In case of APU fire, select the APU MASTER to Off. Depress the APU FIRE EXT switch to discharge the LEFT fire bottle into the APU enclosure.

2. ENGINE SHUTDOWN

a. Pull throttles, located on the center pedestal, to the shut position.
b. Pull fire L-handles (do not rotate if no fire), located to right and left of the throttles.
c. Turn oxygen switches to OFF.
d. Push main battery switches to OFF.

3. APU SHUTDOWN

a. Place APU Master to OFF.

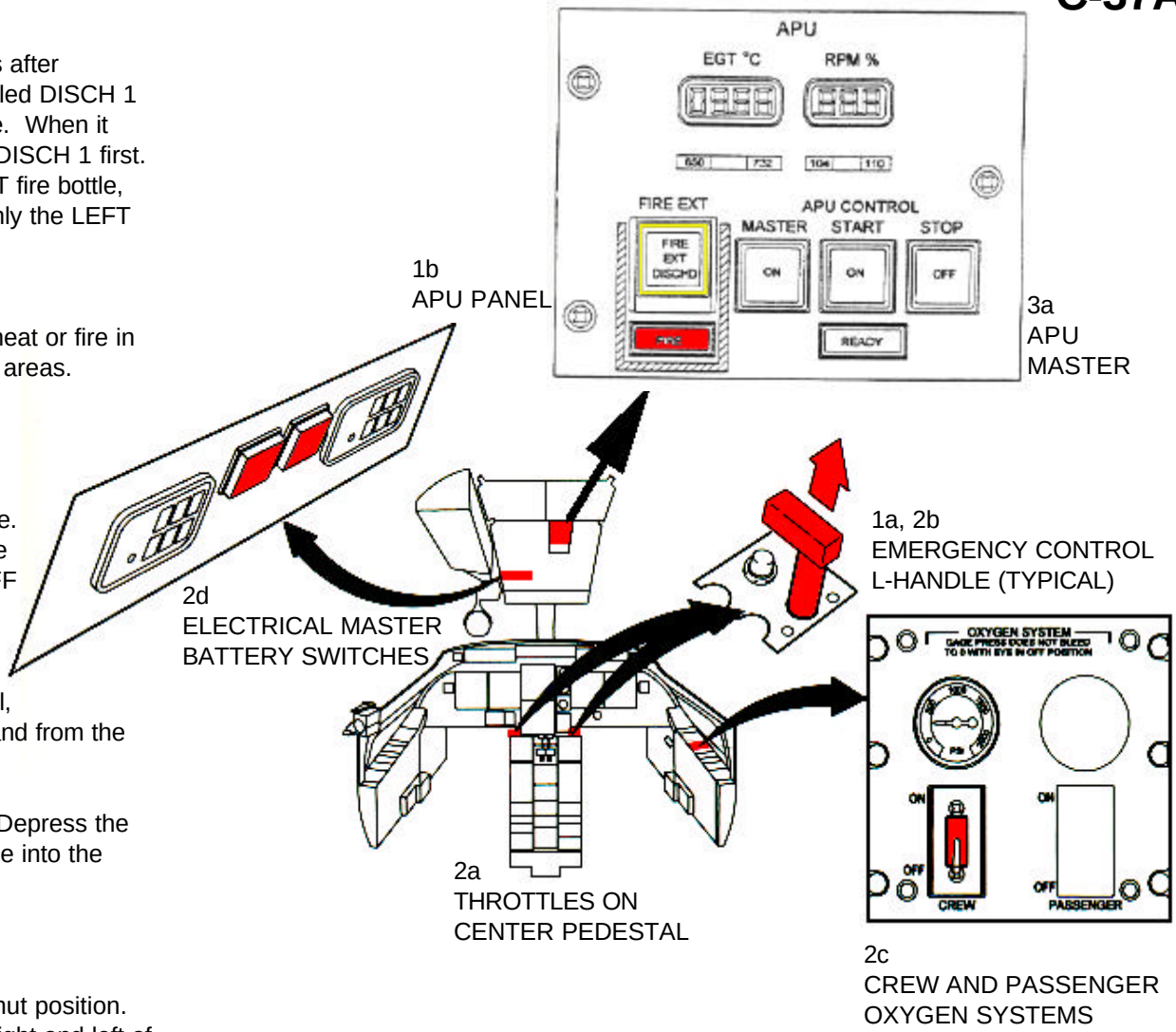

AIRCREW EXTRACTION

1. AIRCREW EXTRACTION

a. Disconnect restraints by rotating rotary buckle in either direction.

b. Position seats using various control handles to position crewmember for extraction.

c. Passenger seats are equipped with seat belts only.

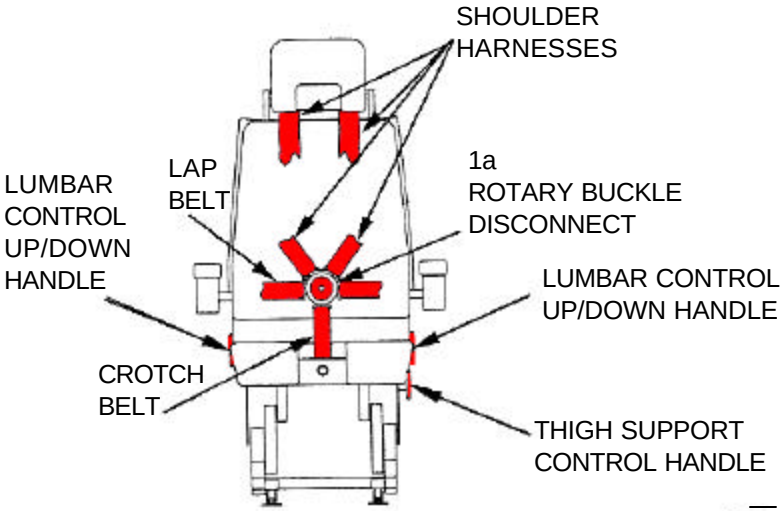

PILOT'/COPILOT'S SEATS

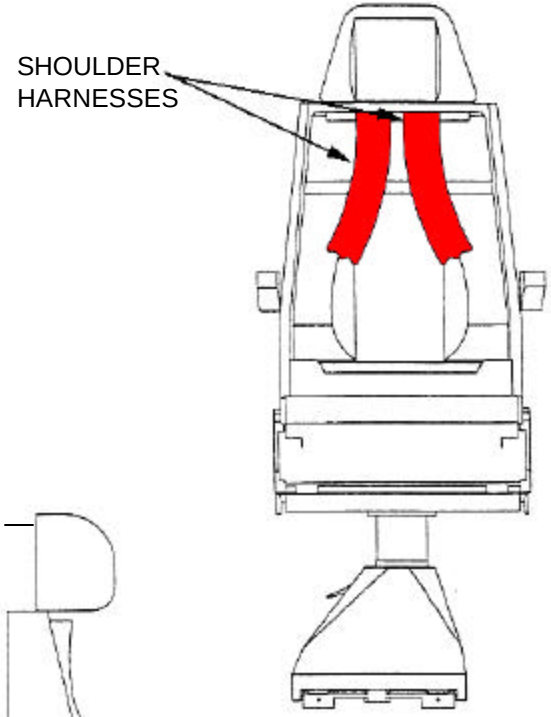

OBSERVER'S SEAT

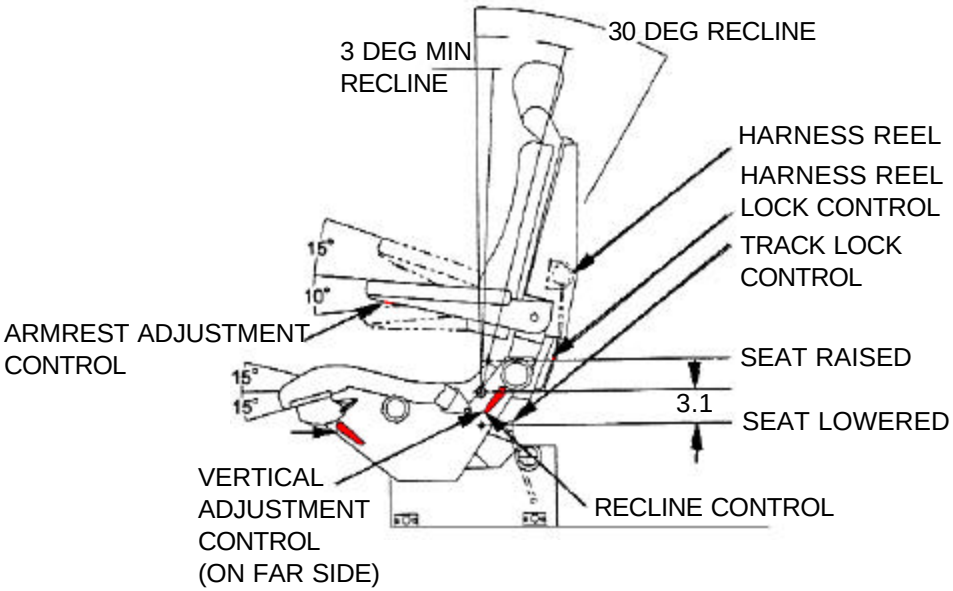

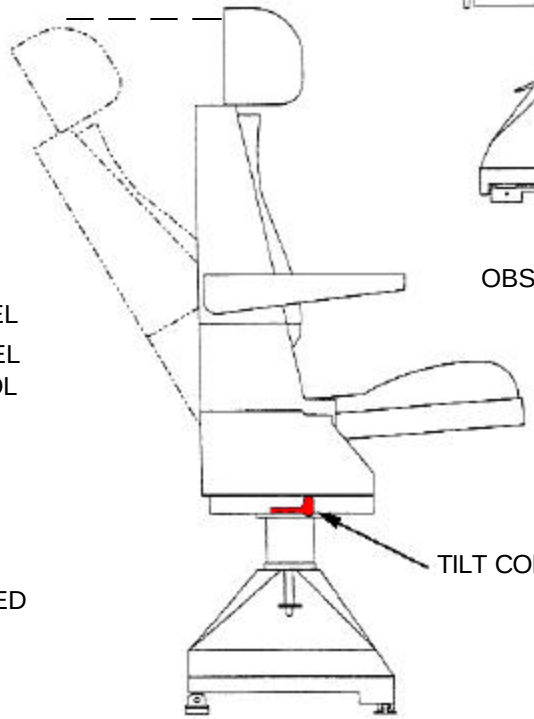

INTERIOR CABIN CONFIGURATION

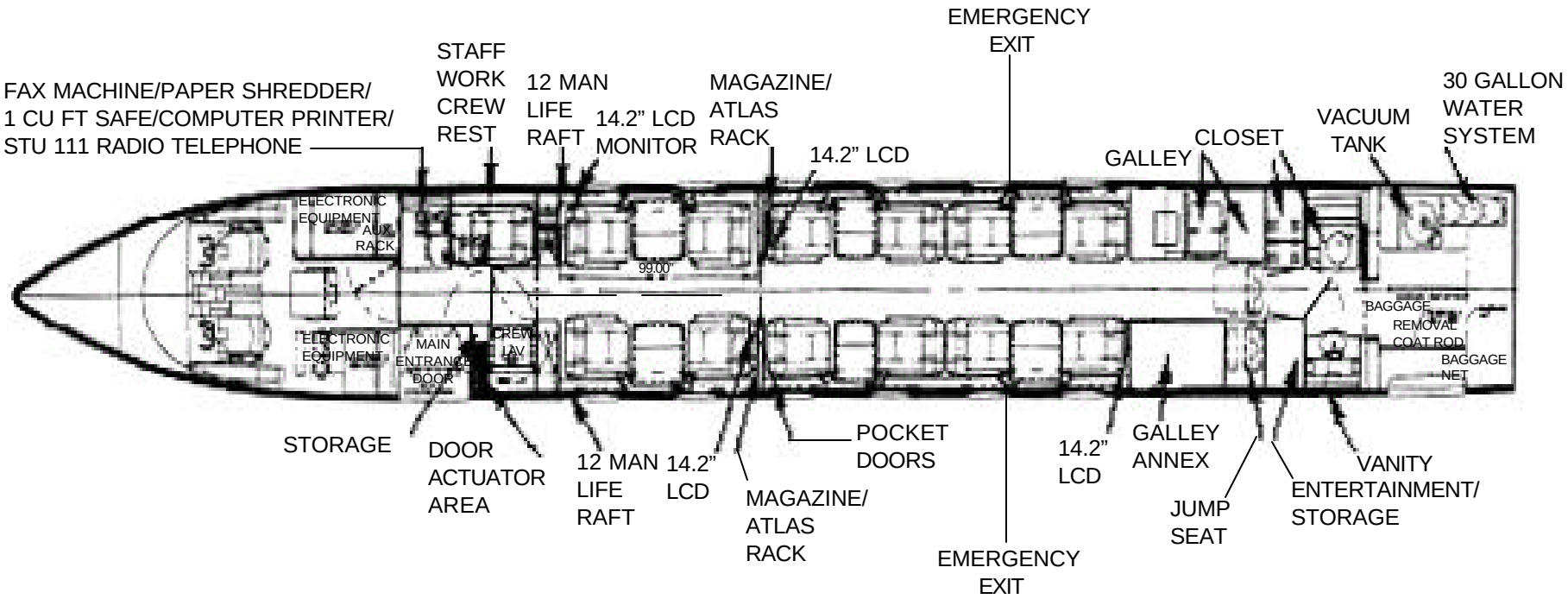

PAINT SCHEME

C-38A

AIRCRAFT DIMENSIONS

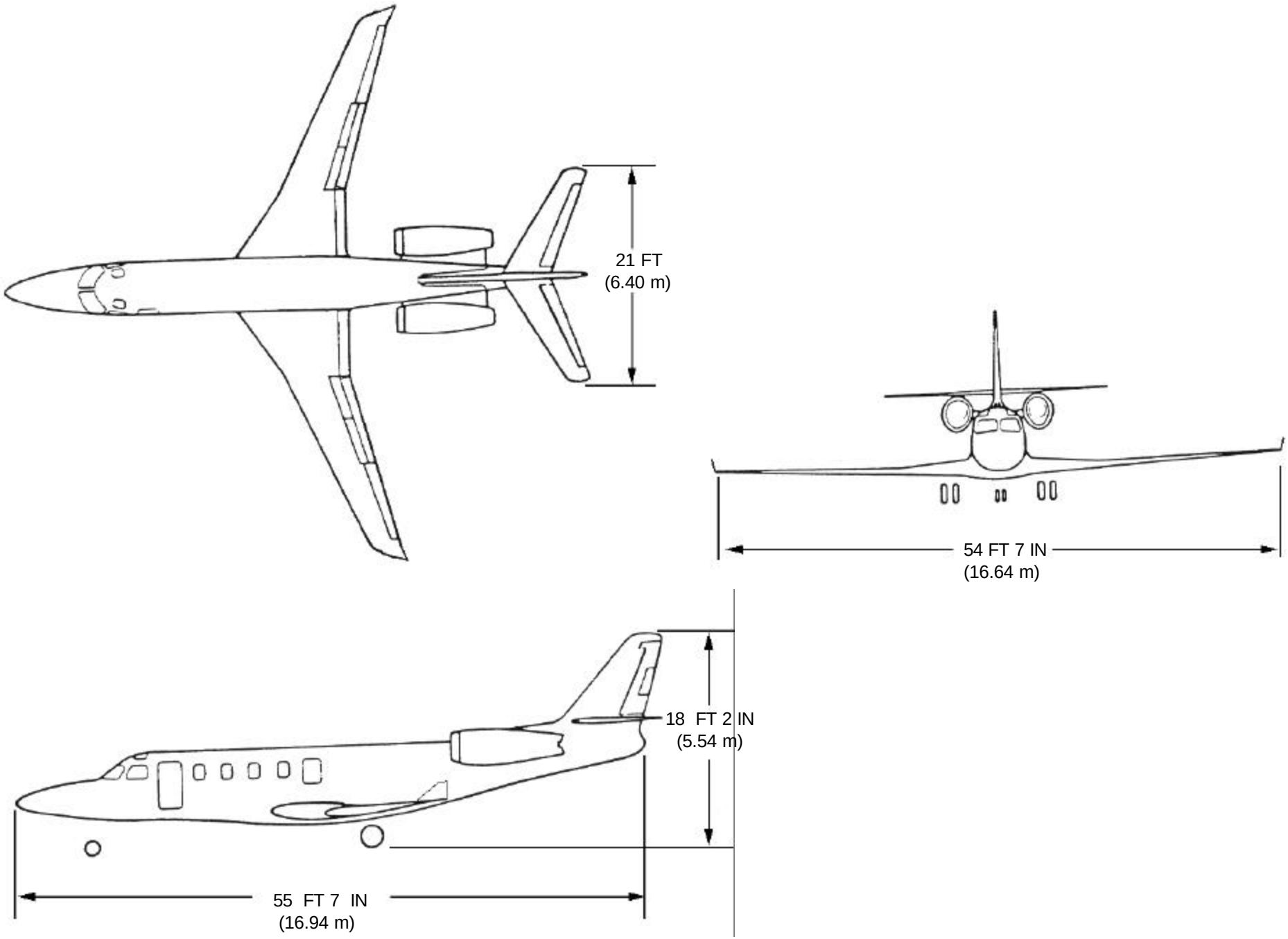

AIRCRAFT DANGER AREAS

INLET AND EXHAUST

NOTE:

The C-38A or Astra is an Israeli built aircraft for the US Air Force. The aircraft's mission is to replace the older C-21 and augment the C-9 Nightingale medivac, target towing, photo-reconaissance, threat simulation and flight inspection missions. The C-38A can be configured with the SPECTRUM AEROMED 500 LP modular life support for air evacuation. This aircraft is also known commercially as the Astra SPX BIZ-Jet.

WARNING

Do not operate engines with emergency exits removed or left left engine above idle with cabin entrance door open. Ground and rescue personnel should wear ear protection during engine operation.

WARNING

If blast deflector is not available, area must be clear 100 feet aft of aircraft.

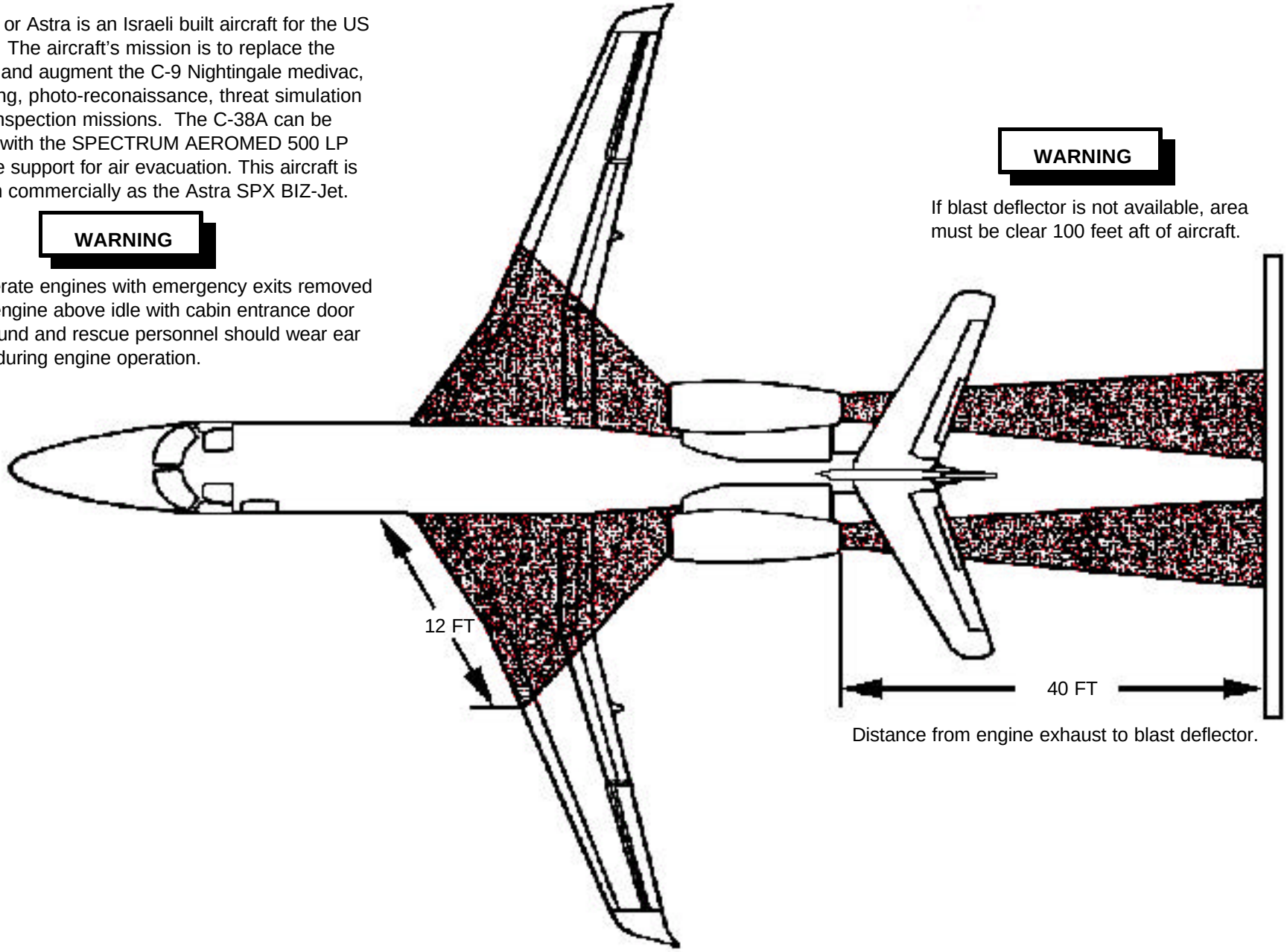

Distance from engine exhaust to blast deflector.

AIRCRAFT DANGER AREAS

HF-9000 AND RADAR DANGERS

WARNING

The *HF-9000 High-Frequency Communications System can cause serious burns from direct contact when the system is transmitting. Do not touch the RF output terminal on the antenna coupler, the antenna lead-in wire, the insulated feedthrough, or the antenna itself. When operated into an antenna, it may produce electromagnetic fields near the antenna that exceed OSHA recommended maximum limits.

WARNING

The Airborne Weather Radar (AWR) WXR-840 or the Turbulence Weather Radar System TWR-850 safe distance for human exposure to radiation is 2 feet (0.65 meters). Ground and rescue personnel should take necessary and reasonable precautions to ensure that personnel and equipment sensitive to microwave radiation are kept safely beyond this distance while within the illumination pattern.

WARNING

Oil Handling - Prolonged contact with MIL-L-5606 oils may cause skin rash. The areas of skin and clothing contacting this oil should be thoroughly washed immediately. Areas in which this oil is used shall be adequately vented to reduce mist and fumes to a minimum.

WARNING

Frequent skin contact with MOBIL 254 lubricating oils may result in permanent paralysis, since this oil contains an additive that is poisonous and readily absorbed through the skin. Do not allow this oil to remain on the skin longer than necessary.

NOTE:

TOTAL FUEL WITH EXTENSION -1,245.3 US GALS
EXTENSION OF 100 US GALS IS OPTIONAL
FUEL TYPE - JP-8

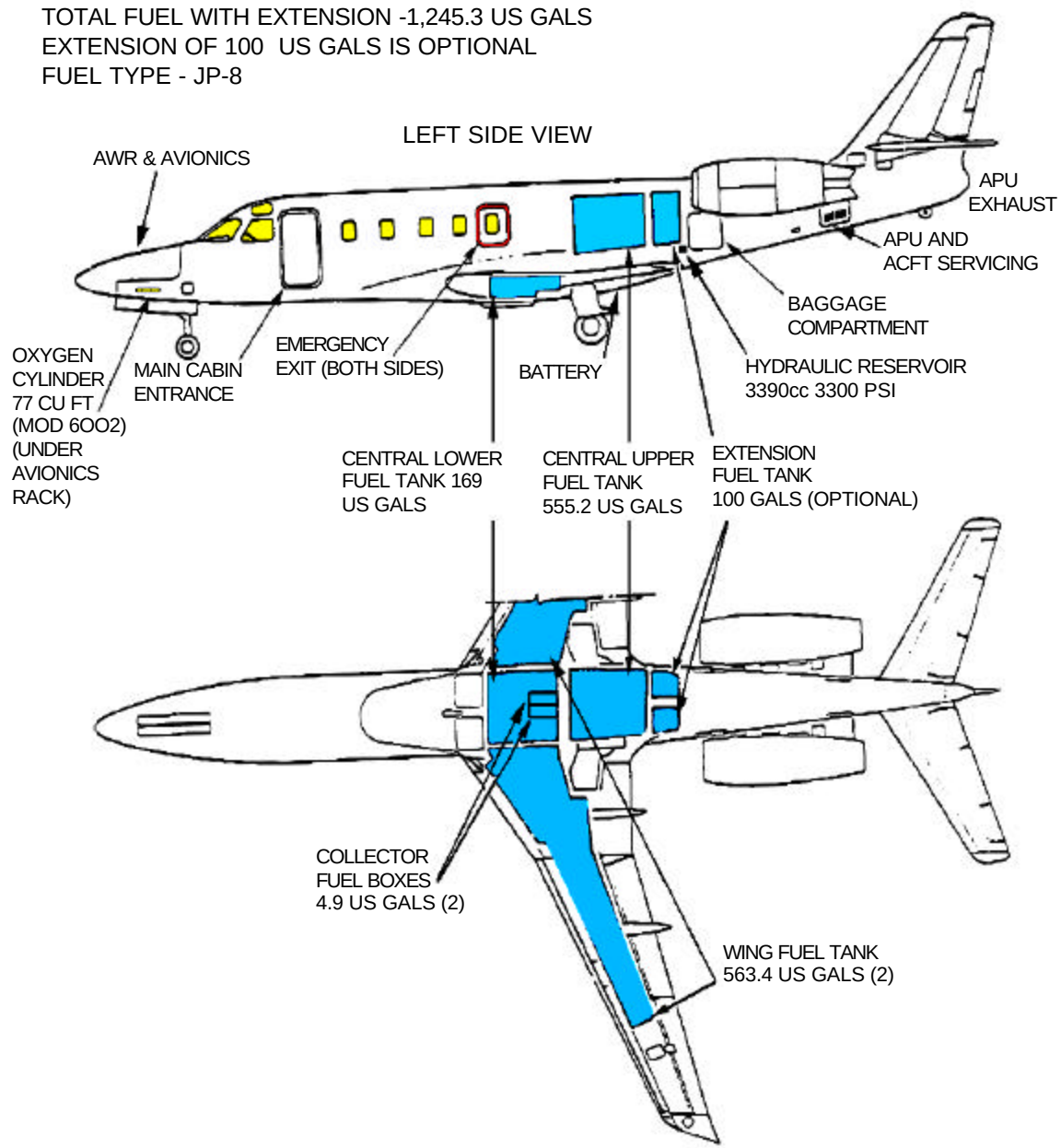

AIRCRAFT DANGER AREAS-Continued

OXYGEN AND HYDRAULIC SYSTEMS

NOTE:

Oxygen system is pressurized to 65 to 95 psig through a pressure reducer, which directly feeds the crew system. The passenger system is fed through an altitude control regulator. There is no third or therapeutic subsystem on this model.

WARNING

Wear chemical goggles and protective gloves. Hydraulic fluid may cause eye, nose and skin irritation. Avoid prolonged breathing or repeated contact with skin.

NOTE:

Hydraulic fluid for the main system is contained in a reservoir located in the rear left side of the baggage compartment at station 390. The reservoir has a fluid capacity of 3890 cc and supplies fluid to operate the ailerons, wheel brakes, landing gear, nose wheel steering and air brakes. Maximum pressure is 3300 psi.

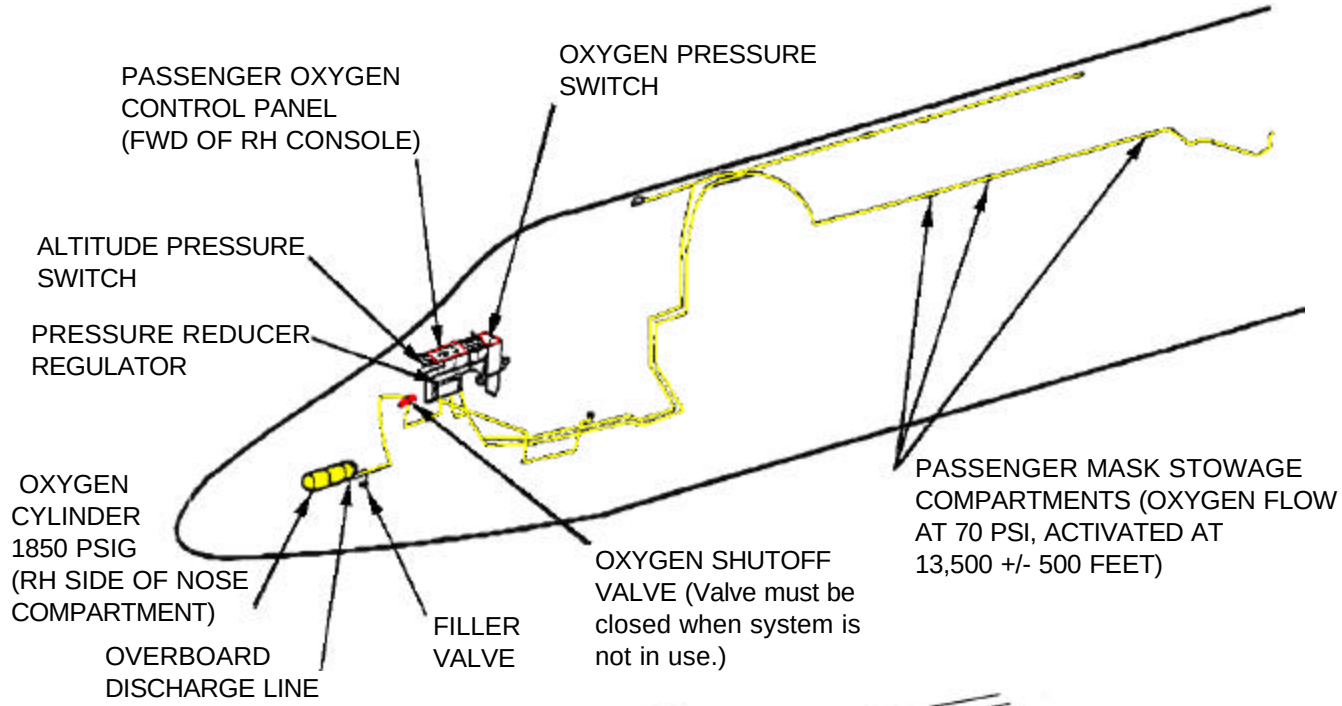

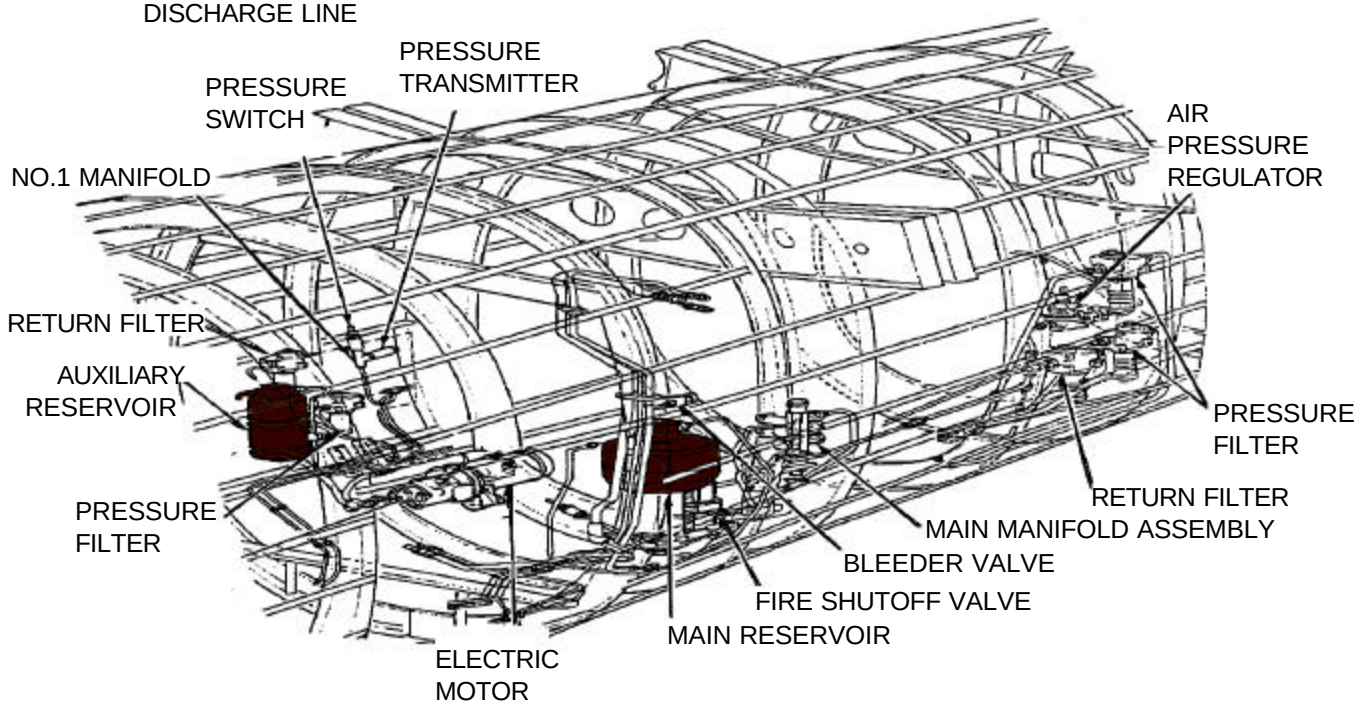

COMPOSITE MATERIALS

- KEVLAR/FOAM
- ALUMINUM SHEET BONDED
- KEVLAR
- GRAPHITE/KEVLAR/AL H/C
- GRAPHITE/KEVLAR/NOMEX
- KEVLAR/NOMEX
- GRAPHITE/EPOXY/NOMEX
- KEVLAR/AL H/C

NOTE:
The structures are fabricated from aluminum alloy, alloy steels, stainless steel, titanium and the list composites.

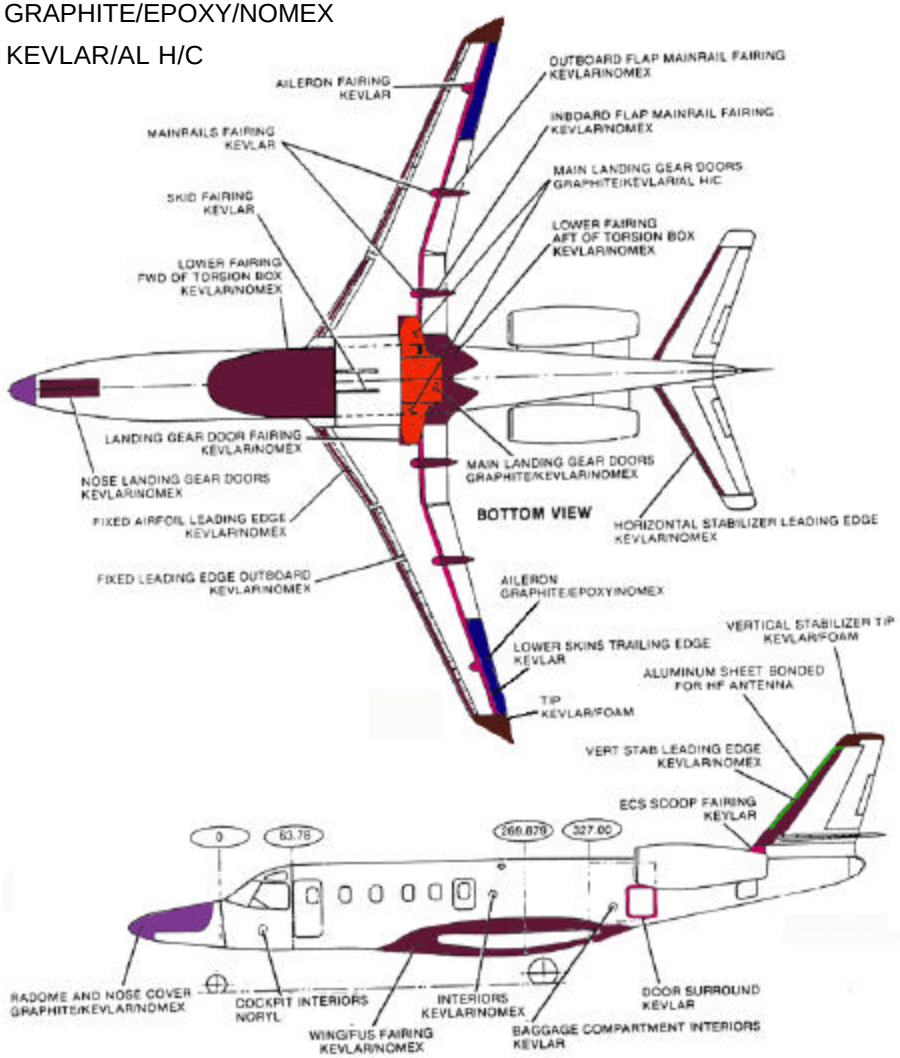

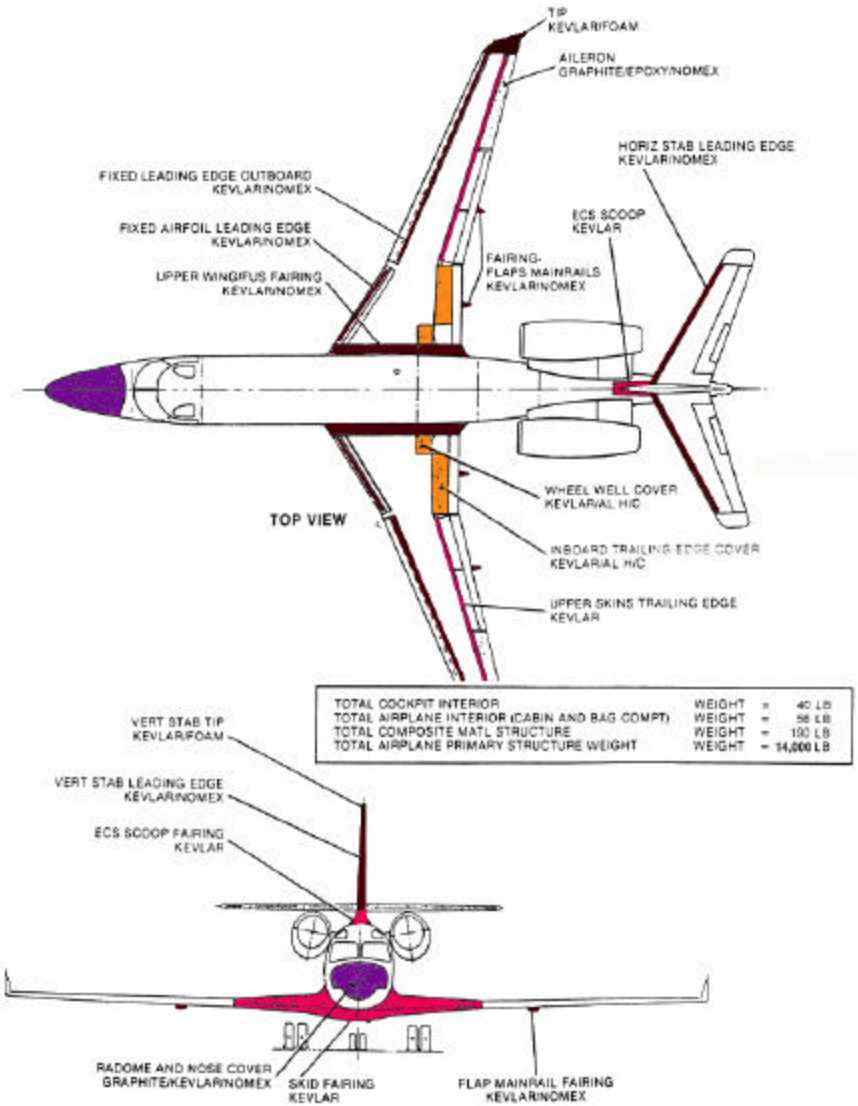

TOTAL COCKPIT INTERIOR	WEIGHT =	40 LB
TOTAL AIRPLANE INTERIOR (CABIN AND BAG COMPT)	WEIGHT =	56 LB
TOTAL COMPOSITE MATL STRUCTURE	WEIGHT =	100 LB
TOTAL AIRPLANE PRIMARY STRUCTURE WEIGHT	WEIGHT =	14,000 LB

SPECIAL TOOLS/EQUIPMENT
Power Rescue Saw
Fire Drill II

NOTE:
2 CREW
6 PASSENGERS (9-SPX Version)

AIRCRAFT ENTRY

NOTE:
The main entrance/airstair for crew and passengers can be opened from the inside or outside when the cabin is depressurized.

1. NORMAL ENTRY

a. To open the main entrance, located on the left forward fuselage, rotate the external locking handle, and unlock the door. Operation of the door handle will deflate the door seal. Door will open outward pivoting on two hinges in the lower door sill in a dampened free fall.

2. EMERGENCY ENTRY

a. Use step 1a for main entrance.

b. Remove either emergency plug-type exit doors, located over each wing, by using the corresponding PUSH handle at center top of door. The emergency doors open inward. Do not place door into egress path.

c. To remove emergency door internally, pull off the cover to expose the EXIT-PULL handle, located at the top center of the door, pull handle and door inward. Do not place door into egress path.

3. CUT-IN

a. Cut-in as required.

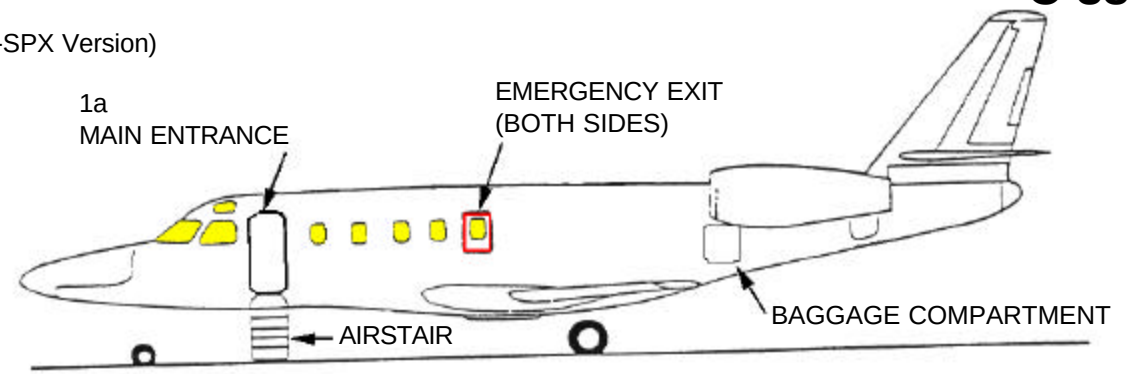

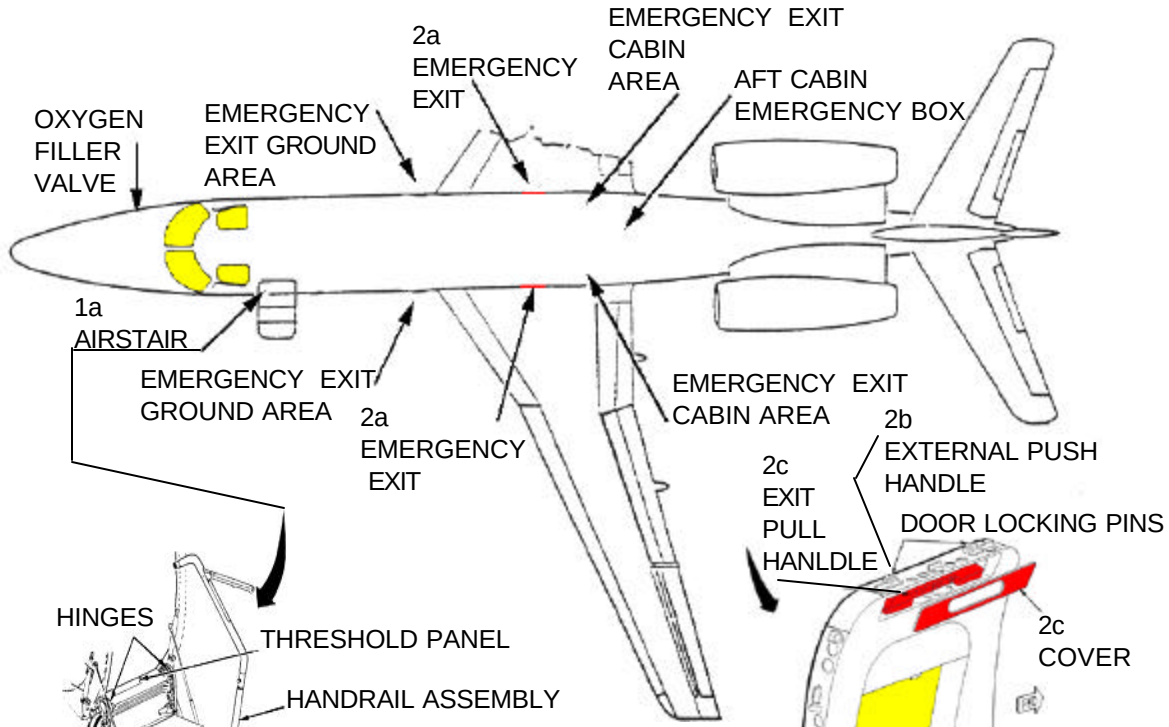

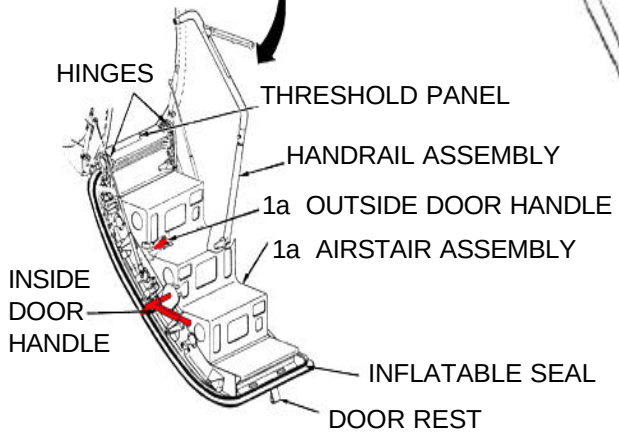

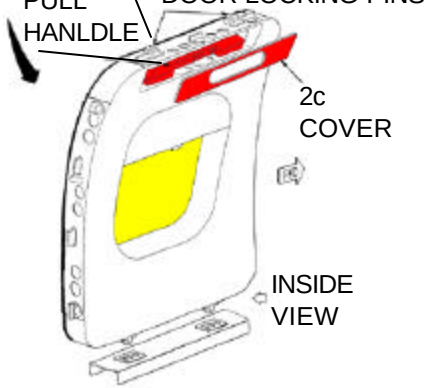

AIRCRAFT ENTRY-Continued

CABIN ARRANGEMENT AND EMERGENCY EQUIPMENT

NOTE:

The configuration to the right is for VIP/ personnel transport. The illustrations below depict the SPECTRUM AERO-MED LP 500. The two pictures below depict two types of systems possibly installed. Passenger seats are removed for air evacuation.

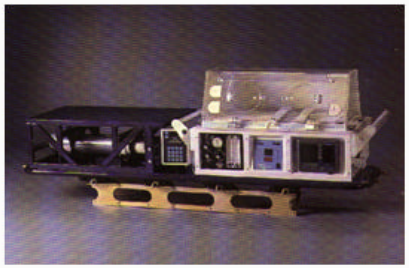

INFANT TRANSPORT DECK

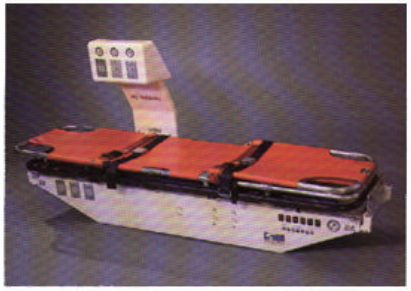

SPECTRUM 500 LP FOR ADULTS

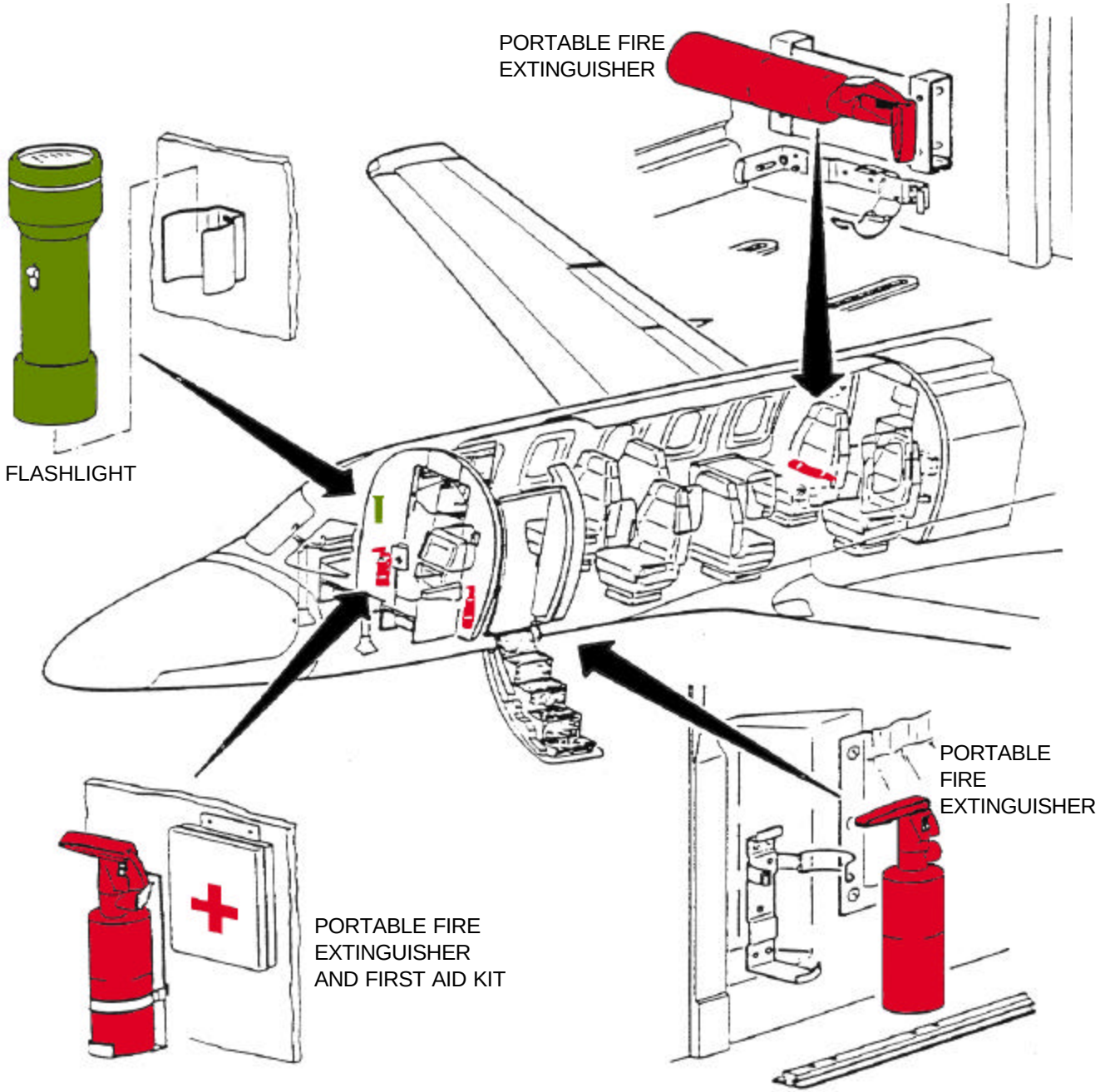

ENGINE/APU SHUTDOWN

1. ENGINE SHUTDOWN

NOTE:
If engine or APU is on fire, do place battery switch to OFF. Battery power is required to operate the fire suppression system.

a. Pull thruster levers to CUT-OFF position.

NOTE:
Each engine nacelle has a fire detection and extinguishing system. There are two zones, the accessories and cumbustor sections. If FIRE light comes on, a fire in zone 1 is present. If OVERHT light comes on, a fire in zone 2 is present. If either FIRE or OVERHT light comes on together with the corresponding light within PRESS TO TEST pushbutton, the warning should be considered false.

b. In case of an engine fire, the FIRE light will illuminate. Press the appropriate FIRE/ OVERHT pushbutton.

c. If the FIRE light stays on, press ARM/EMPTY pushbutton. If fire does not go out within 30 seconds, press the remaining ARM/EMPTY pushbutton.

d. Place BATT MASTER switch to OFF.

e. Turn off oxygen shutoff valve if time allows.

2. APU SHUTDOWN

a. Press the APU FIRE PUSH switch, located on the copilot's instrument panel, to arm the fire extinguishing system and close the fuel shutoff valve.

b. In case of fire, press the FIRE EXT pushbutton.

c. Place BATT MASTER switch to OFF.

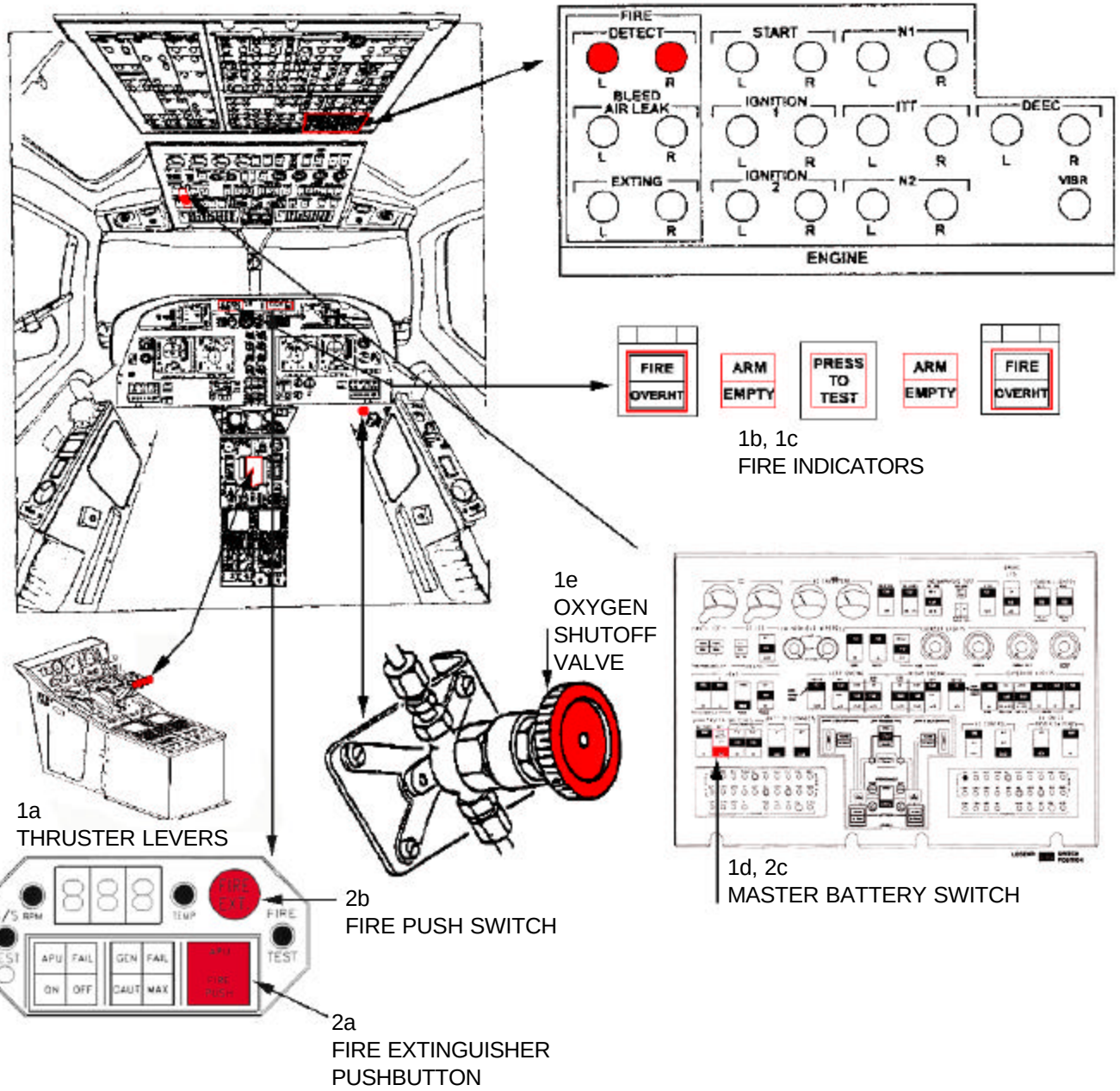

AIRCRAFT PAINT SCHEME

APPLICABILITY: USN C-40A (C-9 REPLACEMENT)

AIRCRAFT PAINT SCHEME

APPLICABILITY: USAF C-40B (VIP TRANSPORT)

AIRCRAFT PAINT SCHEME

APPLICABILITY: USAF C-40C (C-22 REPLACEMENT)

737-600/700/800 MAIN FUEL TANKS WITH C-40 AUXILIARY TANKS LOCATIONS

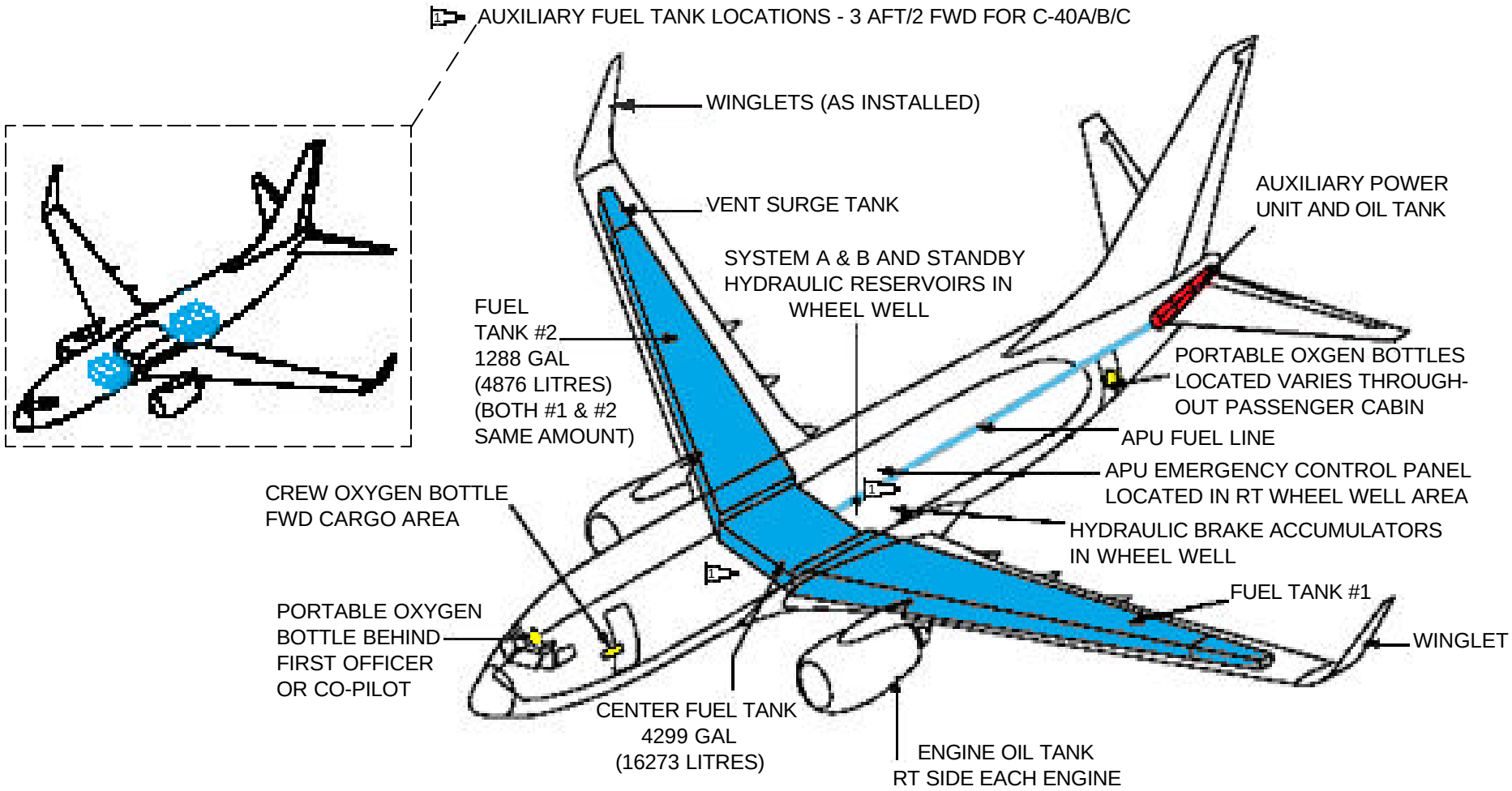

C-40A CABIN CONFIGURATIONS

The C-40A aicraft configuration is a modified 737-700 IGW/QC (Quick Change) jetliner which increases the logistical capabilities of the U.S. Navy's worldwide fleet. It can be configured as an all-passenger, all-cargo or combination of the two. Designated C-40A, the aircraft will be used for the Navy Unique Fleet Essential Airlift (NUFEA) mission, transporting both passengers and cargo around the world. The C-40A can operate in three configurations: an all-passenger (121) configuration, an all-cargo configuration of up to eight pallets, or a combination (or "combi") configuration that will accommodate up to 70 passengers and three cargo pallets.

ALL PASSENGER CONFIGURATION WITH FOUR (4) FLIGHT ATTENDANT STATIONS

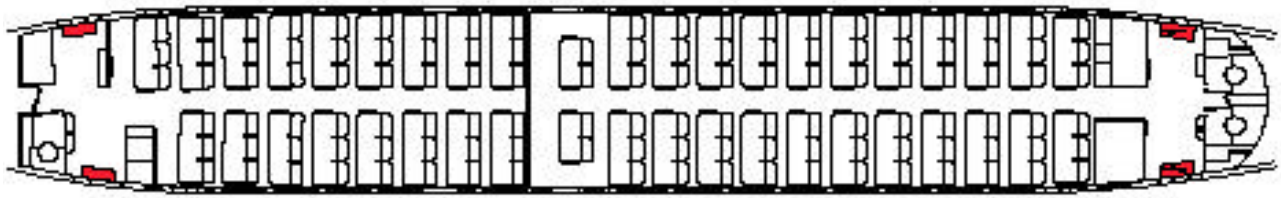

ALL CARGO CONFIGURATION WITH FOUR (4) FLIGHT ATTENDANT STATIONS

COMBI CONFIGURATION WITH FOUR (4) FLIGHT ATTENDANT STATIONS

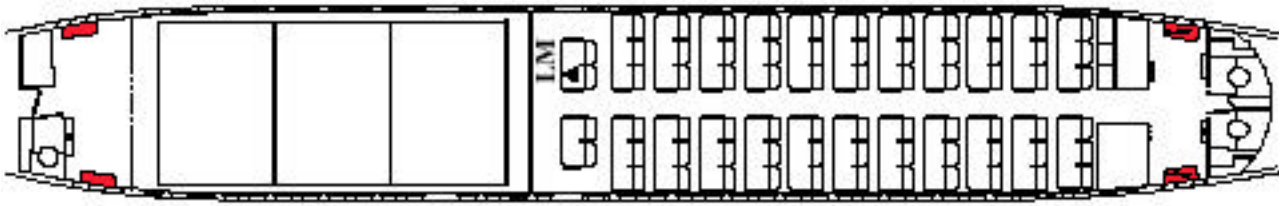

C-40A EXTERIOR PASSENGER DOOR HANDLE ONLY

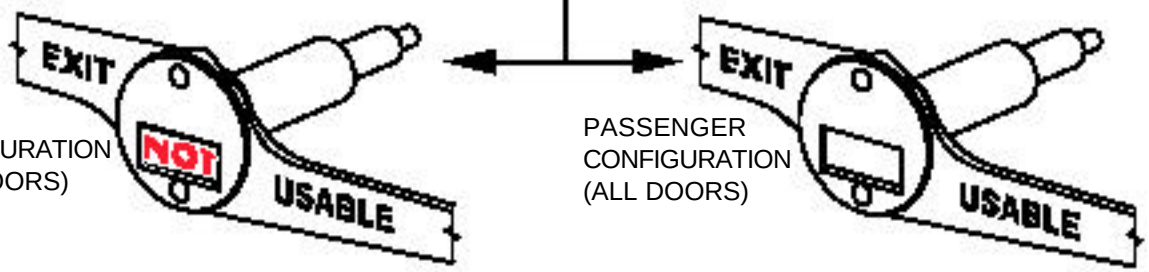

CARGO CONFIGURATION (ALL DOORS)

PASSENGER CONFIGURATION (ALL DOORS)

COMBI CONFIGURATION (FWD DOORS)

COMBI CONFIGURATION (AFT DOORS)

C-40B CABIN CONFIGURATION

The C-40B aircraft configuration is a 737-700 IGW (Increased Gross Weight). This aircraft is specifically designed for VIP transport operated by the USAF.

26 Total Passengers and 11 Crew*

* Available Crew Seats:

- 4 Crew Rest Seats
- 4 Flight Attendant Seats
- 3 Flightdeck Seats
- 1 CSO Seat

OPERATIONAL DOORS (4 PLACES)
EMERGENCY EXITS (2 OVER WINGS)

WINDOWS

BLOCKED WINDOWS

DIMENSIONS:
Length - 110 FT 4 IN (33.63 M)
Height - 41 FT 2 IN (12.55 M)
Wingspan - 112 FT 7 IN (34.3 M)

FUEL CAPACITY: 6878 US GALS

C-40B STATION LOCATIONS

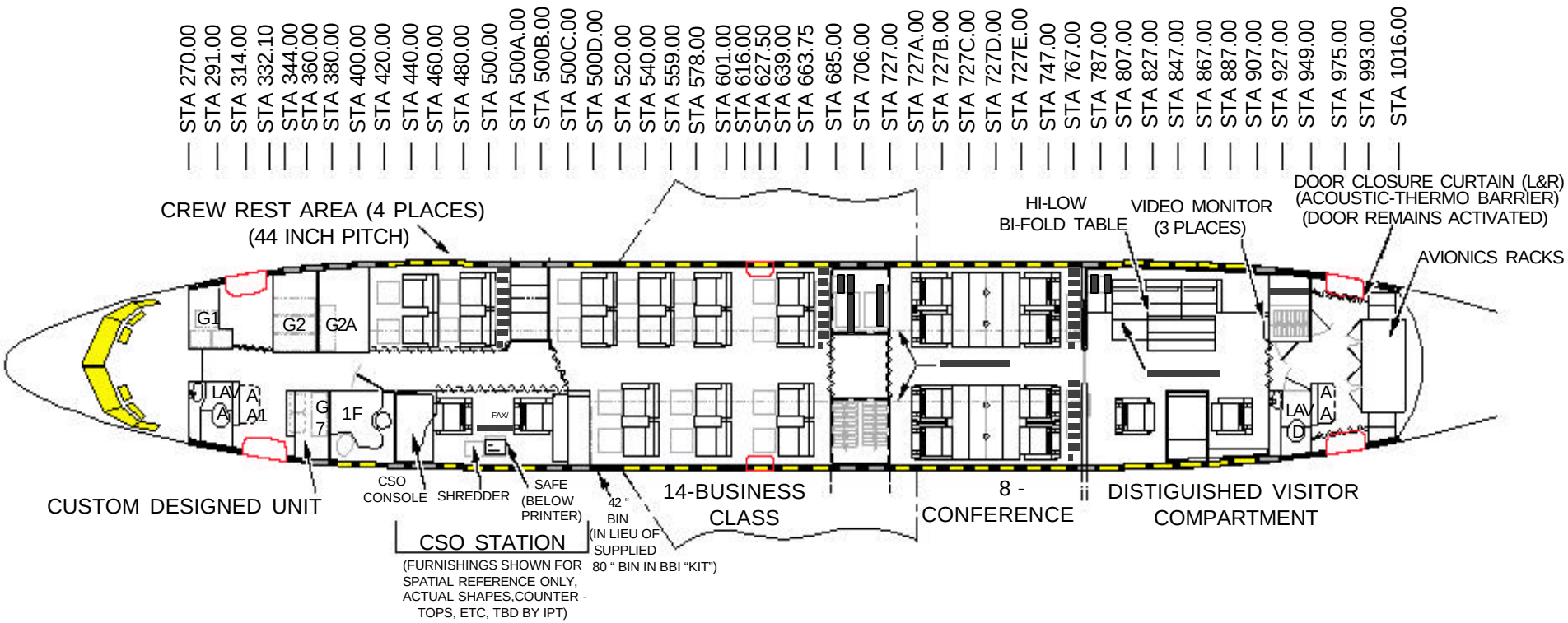

C-40C CABIN INTERIM CONFIGURATION

NOTE:

The C-40C illustrated here is the delivered cabin iterim configuration.

110 Total Passengers
8 B/C
102 Y/C

OPERATIONAL DOORS (4 PLACES)
EMERGENCY EXITS (2 OVER WINGS)

WINDOWS

C-40C STATION LOCATIONS

STA 270.00
STA 291.00
STA 314.00
STA 332.10
STA 344.00
STA 360.00
STA 380.00
STA 400.00
STA 420.00
STA 440.00
STA 460.00
STA 480.00
STA 500.00
STA 500A.00
STA 500B.00
STA 500C.00
STA 500D.00
STA 520.00
STA 540.00
STA 559.00
STA 578.00
STA 601.00
STA 616.00
STA 627.50
STA 639.00
STA 663.75
STA 685.00
STA 706.00
STA 727.00
STA 727A.00
STA 727B.00
STA 727C.00
STA 727D.00
STA 727E.00
STA 747.00
STA 767.00
STA 787.00
STA 807.00
STA 827.00
STA 847.00
STA 867.00
STA 887.00
STA 907.00
STA 927.00
STA 949.00
STA 975.00
STA 993.00
STA 1016.00

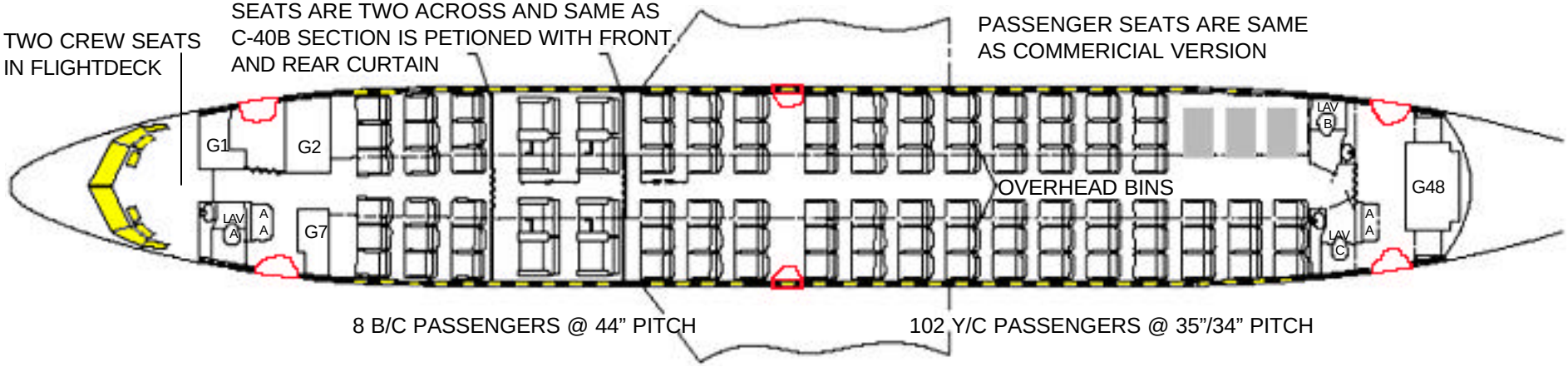

C-40C CABIN CONFIGURATION INTERIOR MODIFICATION

NOTE:

The interior modification to the C-40C will accomodate 40 passengers, 4 attendants and 4 crew rest.

OPERATIONAL DOORS (4 PLACES)
EMERGENCY EXITS (2 OVER WINGS)

WINDOWS

C-40C STATION LOCATIONS

NO GALLEY MODIFICATIONS	FWD BUSINESS	CONFERENCE	AFT BUSINESS	CREW REST	NO GALLEY MODIFICATIONS
	12 BUSINESS CLASS @ 50” PITCH (MIN)	8 CONFERENCE 9 g SEATS - NOT T, T&L CERT	28 BUSINESS CLASS @ 42” PITCH (MIN)		

COMPOSITE MATERIALS LOCATIONS

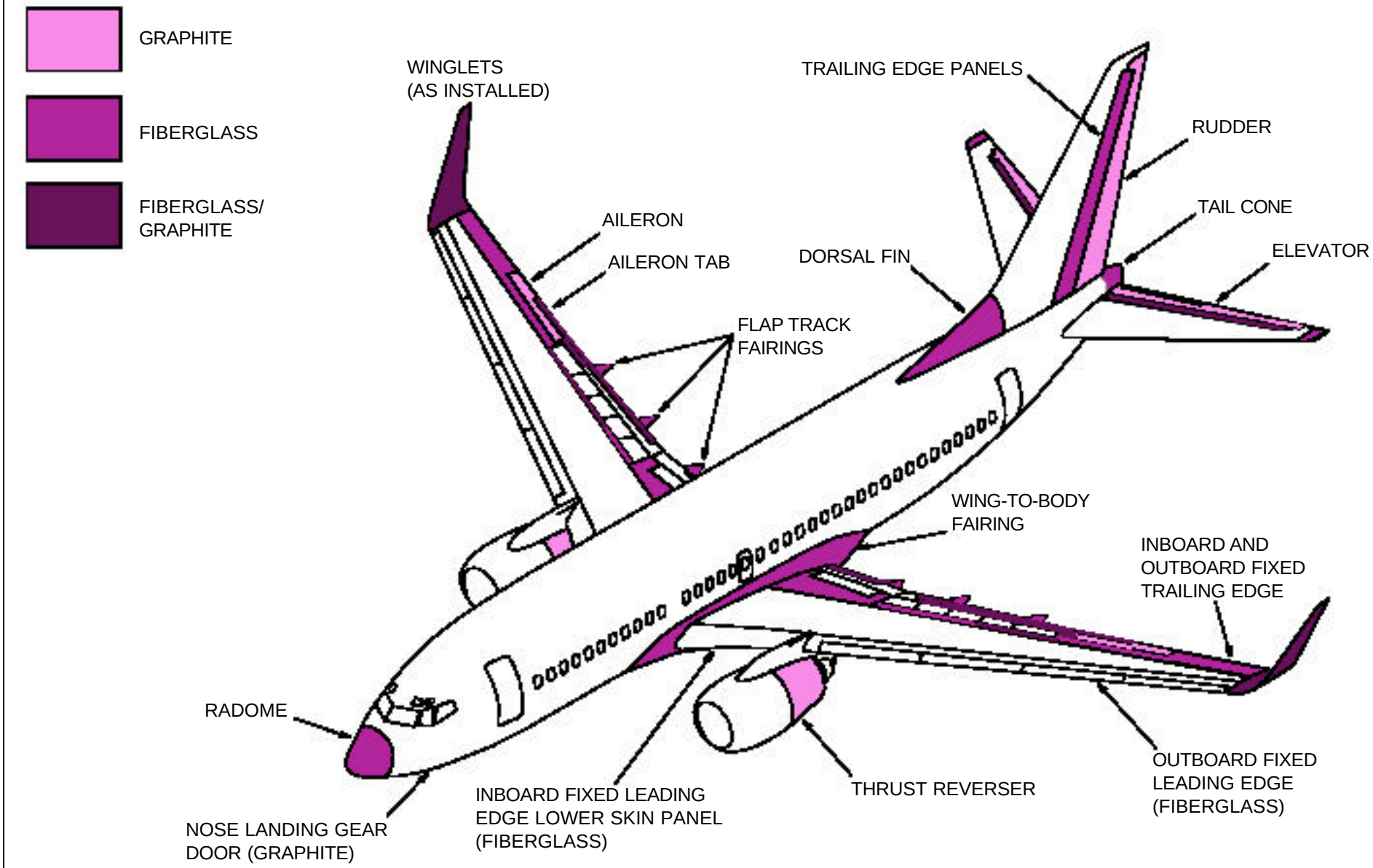

SPECIAL TOOLS/EQUIPMENT
Power Rescue Saw
12 Foot Ladder
Fire Drill II

AIRCRAFT ENTRY
-600/-700/-800 BOEING BUSINESS JET SERIES

1. NORMAL/EMERGENCY ENTRY

CAUTION

When passenger and service doors are opened from outside, chutes will automatically deploy.

a. Push in top center panel on overwing escape hatches, located on both fuselage sides. Push hatch inward and upward.
b. Pull handle on forward and aft entry doors, located left side of fuselage, outward and rotate clockwise. Pull doors outward.
c. Pull handle on right forward and aft service doors, outward and rotate counterclockwise. Pull doors outward.

2. PILOT'S SLIDING WINDOW (RH & LH) CARGO AND RH ONLY PASSENGER AIRCRAFT

a. To open window from outside: push in external access door.
b. Pull external release handle and slide window open.

3. CARGO DOOR OPERATION (IF INSTALLED)

a. To open cargo door 1, unlock the external door handle.
b. Verify unlocked light is illuminated.
c. Hold the UP TO CANOPY switch in position until door motion stops.

4. CUT-IN

a. Cut into fuselage as the last resort. Metal cutting portable power equipement is required. Use caution when cutting due to passenger location in relation to cutting location.

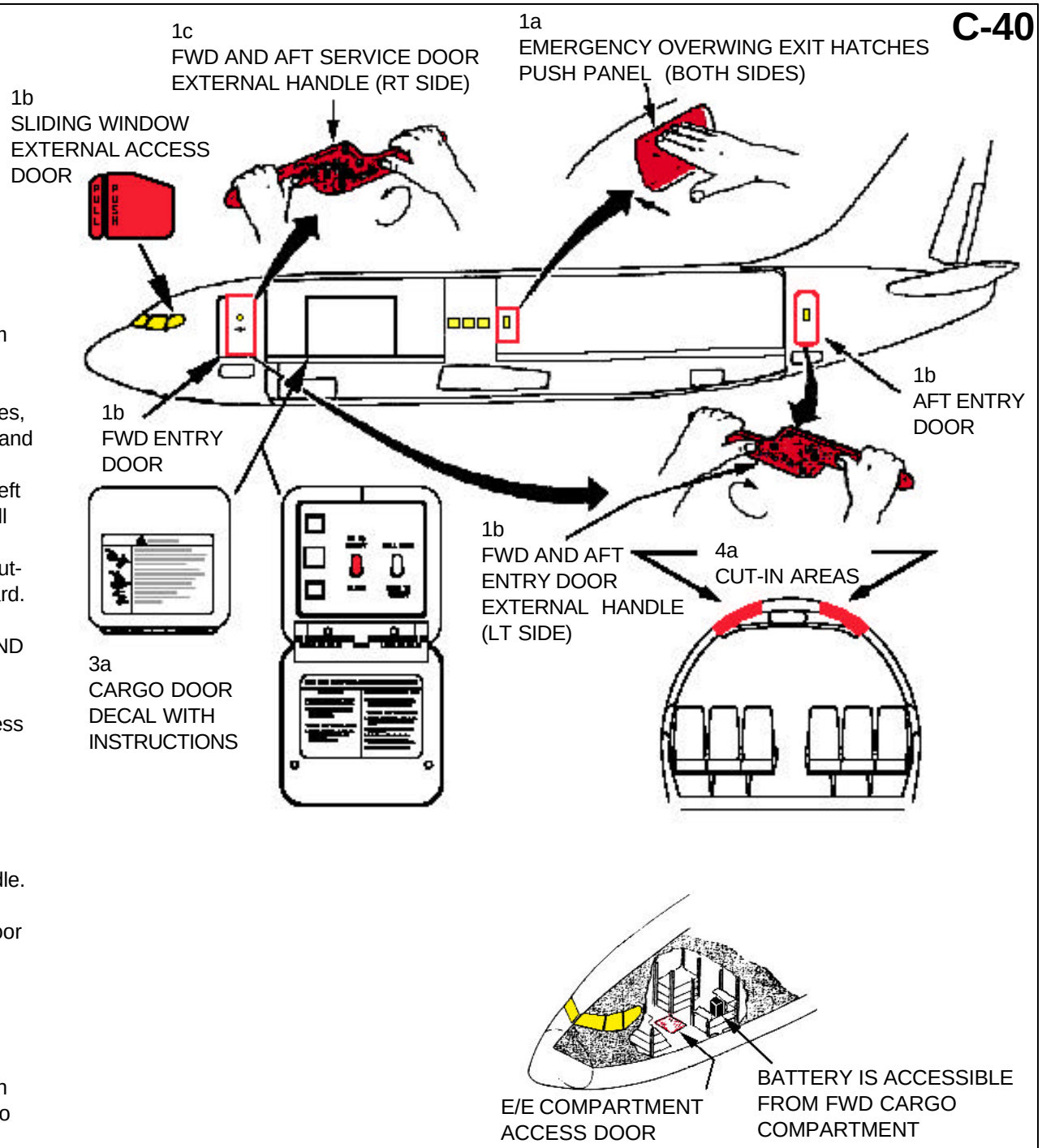

ENGINE SHUTDOWN

1. ENGINE SHUTDOWN

a. Retard thrust levers, located on pilot's center console, to RETARD position.

b. Retard engine start levers, located on pilot's console, to CUT OFF position.

c. In case of engine fire, pull appropriate engine fire T-handles, located on center console forward of thrust levers. Turn right or left to discharge agent. If not illuminated, push and hold the button under the switch to release.

d. In case of APU fire, pull the APU fire T-handle, located on center console forward of thrust levers. Turn right or left to discharge agent.

e. Place APU master switch up to OFF position OR OFF position. (Switch type can vary.)

f. Lift guard and place battery switch, located on pilot's center overhead panel, to OFF position.

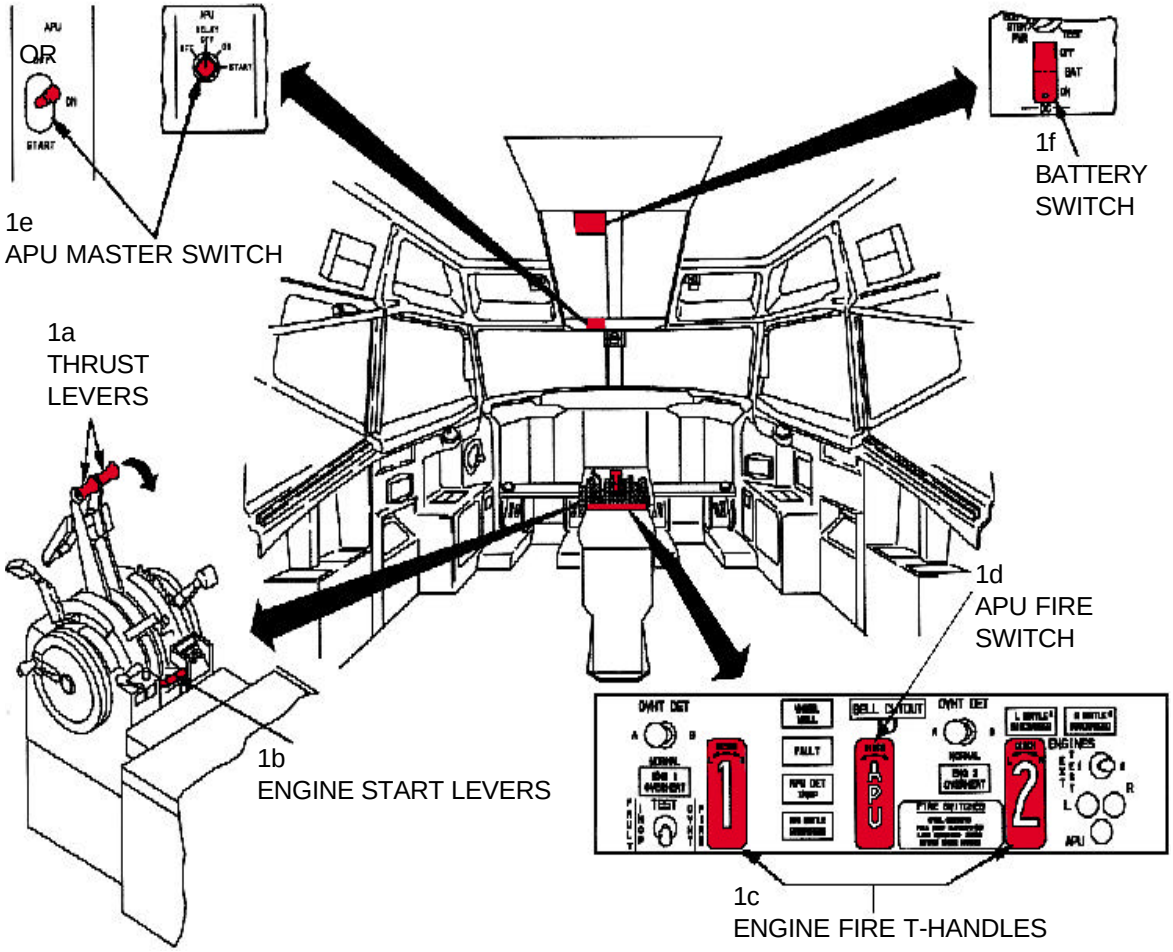

AIRCREW EXTRACTION

1. AIRCREW EXTRACTION

NOTE:

Due to the possibilty of several configurations for seating and cargo, the following seat arrangements may or may not be encountered. The flight deck configuration is fixed with two seats. There is no flight engineer seat. If seat tracks are not damaged during crash landing use adjustable seat control handles to retract seats to aft position.

a. FLIGHTDECK SEATS - Unlatch lap belt and remove shoulder harness from the pilot and co-pilot. Use horizontal adjustment handle on pilot's and copilot's seat, and swivel adjustment handle to position seats.

b. Raise armrests to up position and depress armrest adjustment release under pilot's and copilot's armrests, and raise up to position.

c. Rotate lap belt release mechanism, remove shoulder harness and crotch strap (as applicable).

d. CONSOLE SEATS - These seats may be equipped with a shoulder harness and lap belt. Unlatch restraints as necessary to free occupants.

e. PASSENGER'S SEATS - Passengers seats are equipped with lap belts only. Lift center latch connecting both sides of belt to release occupant.

FLIGHTDECK WITH TWO SEATS

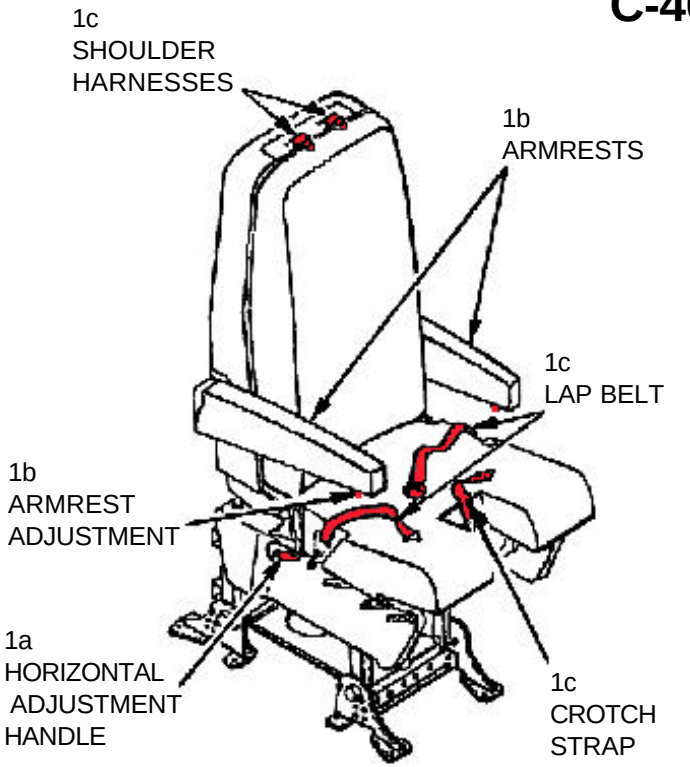

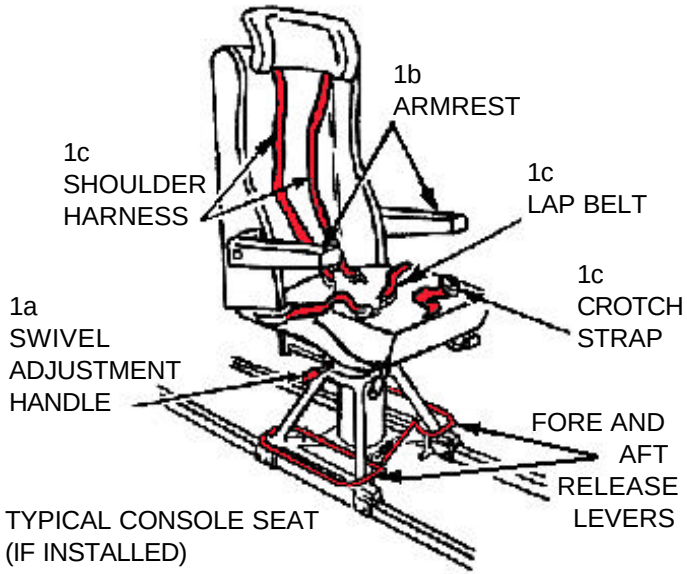

TYPICAL CONSOLE SEAT
(IF INSTALLED)

EMERGENCY RESCUE ACCESS

1. EMERGENCY RESCUE ACCESS

a. Use the two forward entry doors.

b. Use the two overwing escape doors.

c. Use the two aft service doors.

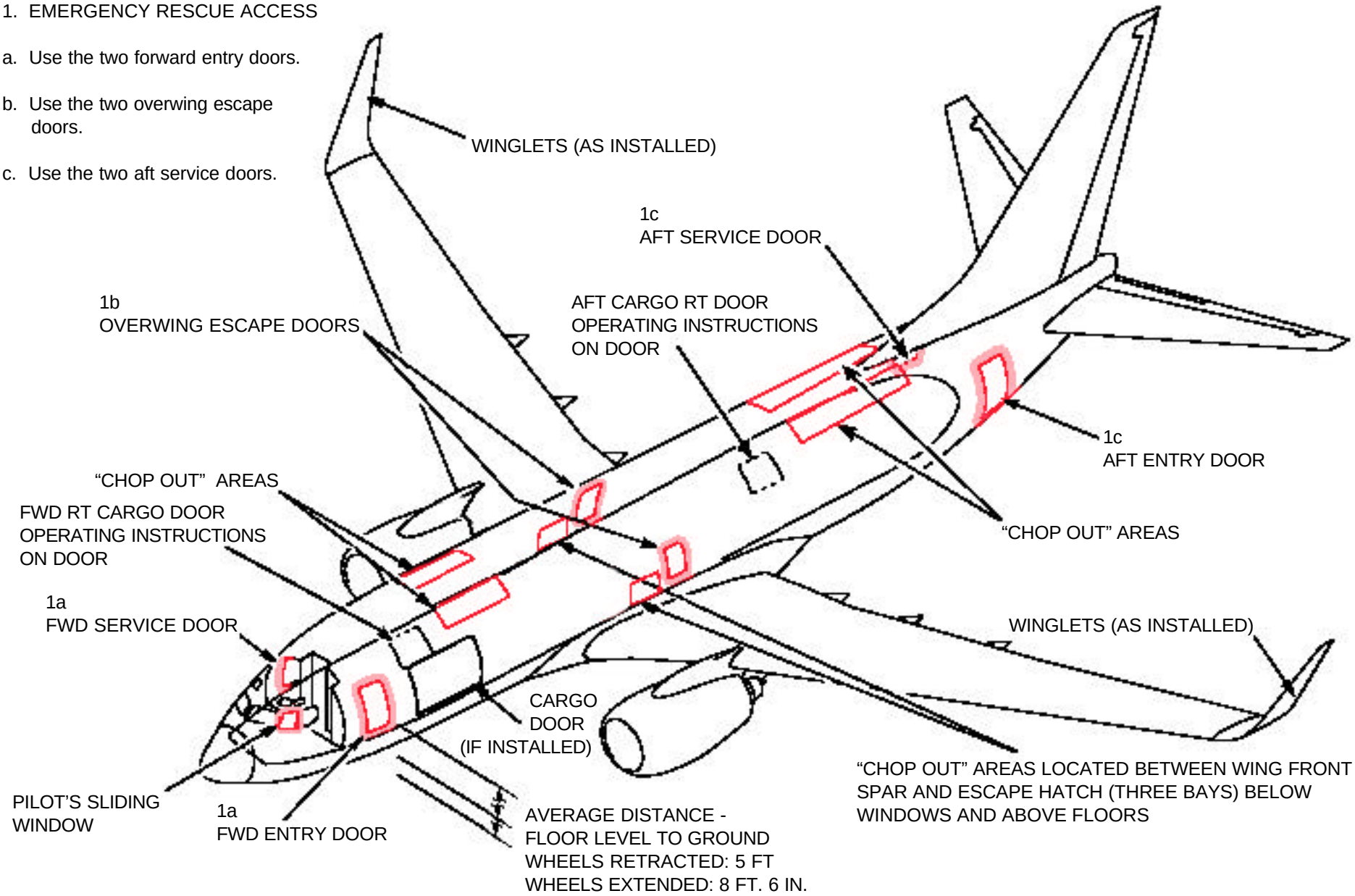

EMERGENCY EXITS AND EVACUATION ROUTES

1. EMERGENCY EXITS AND EVACUATION ROUTES

a. Use the two forward entry, two overwing escape, two aft service doors, or the two forward flightdeck sliding windows as emergency exits.

b. The sliding #2 window emergency exits are equipped with stowed ropes or straps used to lower personnel who choose these exits. These windows can be opened externally as well as internally. To open either window, depress trigger, turn handle back and inboard. Slide window until it locks in the open position.
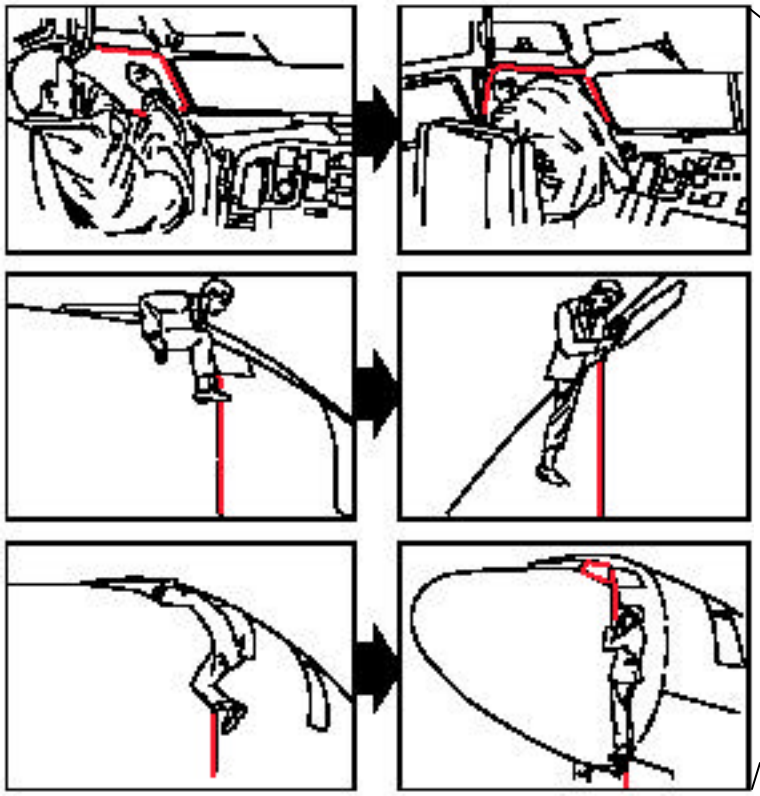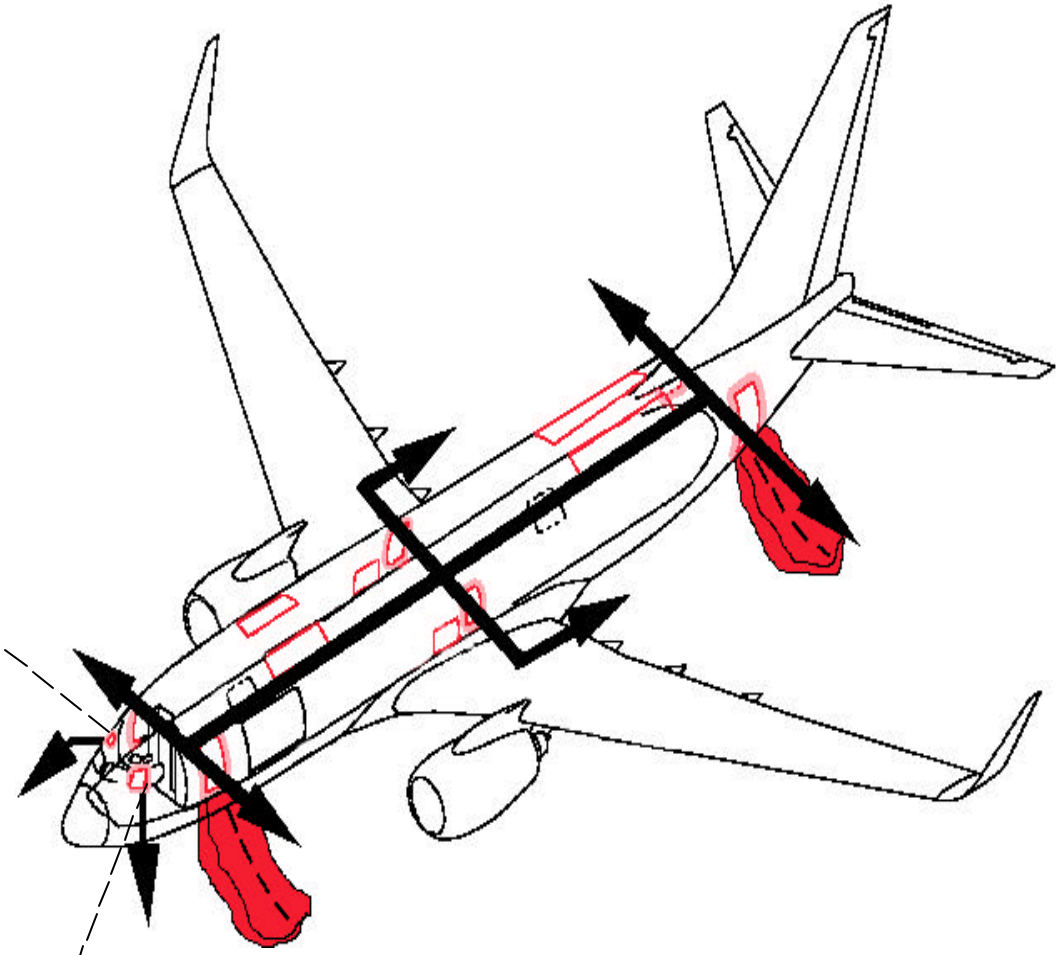
c. Use the evacuation route closest to your location. Some doors are equipped with emergency chutes that are automatically deployed when a door or hatch are opened from the inside.