WELCOME TO TECHNICAL ORDER 00-105E-9, 1 JULY 2004, REVISION 9.

THIS IS SEGMENT 21 COVERING CHAPTERS 23, 24 AND 25.

TO NAVIGATE

CLICK ON THE BOOKMARKS AND CLICK ON THE (+) SYMBOLS, THEN CLICK ON SUBJECT LINKS TO GO TO SPECIFIC VIEWS IN THIS SEGMENT.

CONTINUE

NOTICE

CONTACT

TO GO DIRECTLY TO THE TECHNICAL ORDER,
CLICK ON THE CONTINUE BUTTON.

TO SEE THE SEGMENT INFORMATION CHANGE NOTICE,
CLICK ON THE NOTICE BUTTON.

TO CONTACT THE TECHNICAL CONTENT MANAGER ,
CLICK ON THE CONTACT BUTTON.

TECHNICAL ORDER 00-105E-9 TECHNICAL CONTENT MANAGER

WRITTEN CORRESPONDENCE:

HQ AFCESA/CEXF
ATTN: Fire and Emergency Services Egress Manager
139 Barnes Drive Suite 1
Tyndall AFB, Florida 32403-5319

E-MAIL: Tom.Stemphoski@tyndall.af.mil

INTERNET: HQ AFCESA Fire and Emergency Services PUBLIC WEB PAGE:
http://www.afcesa.af.mil/CEX/fire/index.asp

PHONE: (850) 283-6150
DSN 523-6150

FAX: (850) 283-6390
DSN 523-6390

For technical order improvements, correcting procedures, and other inquiries, please use the above media most convenient.

SEGMENT 21 INFORMATION CHANGE NOTICE

This page is provided to notifiy the user of any informational changes made to Technical Order 00-105E-9 in this Segment and the current Revision. Informational changes will be referenced in the Adobe Reader's Bookmark tool as a designator symbol illustrated as a <[C]> for quick reference to the right of the affected aircraft. The user shall insure the most current information contained in this TO is used for his operation. Retaining out of date rescue information can negatively affect the user's operability and outcome of emergencies. If the user prints out pages his unit requires, the user shall print the affected page(s), remove and destroy the existing page(s), and insert the newly printed page(s) in the binder provided for that purpose. A Master of this TO shall be retained in the unit's library for reference, future printing requirements and inspections.

CHAPTER	AIRCRAFT	PAGE	EXPLANATION OF CHANGE
23	UC-26	ALL	Added to inventory. File is referred to Chapter 6.
25	AH-1W	ALL	Updated designation from AH-1.
25	UH-3/SH-3	ALL	Added to inventory.
25	HH-60H/SH-60	ALL	Updated designation from SH-60.

NOTE: Redesignations align with NAVAIR 00-80R-14-1.

NOTE

Chapter 23 contains emergency rescue and mishap response information for the following aircraft:

USN	**C-2**
USN	**C-9**
USN	**UC-12**
USN	**C-20**
USN	**UC-26**
USN	**C-130**

CHAPTER 23

U.S. NAVY

TRANSPORT

AEROSPACE EMERGENCY RESCUE AND MISHAP RESPONSE INFORMATION

23-1. INTRODUCTION AND USE.

23-2. This section contains emergency rescue and mishap response information illustrations in alphanumerical order relative to type and model of aircraft. This arrangement of illustrations is maintained from Chapter 4 throughout the remainder of the publication.

23-3. GENERAL ARRANGEMENT.

23-4. Aircraft type designation has been positioned in the upper right corner of the horizontal illustration for rapid identification. Additional aids to rapid orientation are:

a. Recent technological advances in aviation have caused concern for the modern firefighter. Aircraft hazards, cabin configurations, airframe materials, and any other information that would be helpful in fighting fires, the locating and rescue of personnel will be added as the information becomes available.

b. Suggested special tools/equipment are listed in the upper left corner, on the Aircraft/Entry page of each listed aircraft.

c. Procedural steps covering emergency/normal entrances, cut-ins, engine/APU shutdown, safetying ejection/escape systems, and aircrew extraction are outlined on the left side of each page with coordinated illustrations on the right.

d. Illustrations located on right side of pages are coordinated with text by numerals and small letters depicting both paragraph and subparagraph on the page.

e. Each illustration is consistently colored and/or pattern keyed to highlight essential emergency rescue information.

f. Details are pulled directly from the illustration to highlight an area, thus eliminating unnecessary searching for desired information.

AIRCRAFT DIMENSIONS

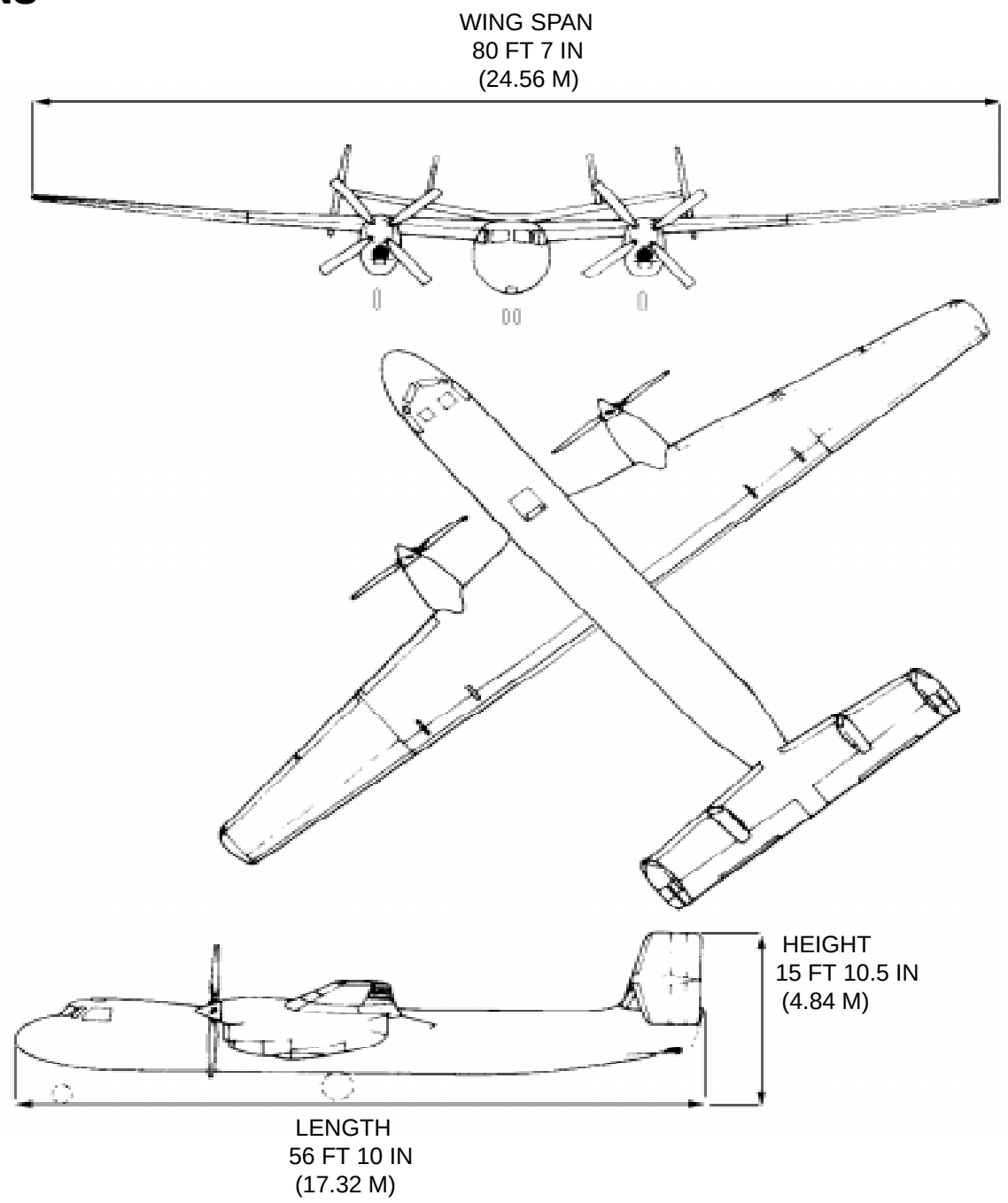

AIRCRAFT HAZARDS

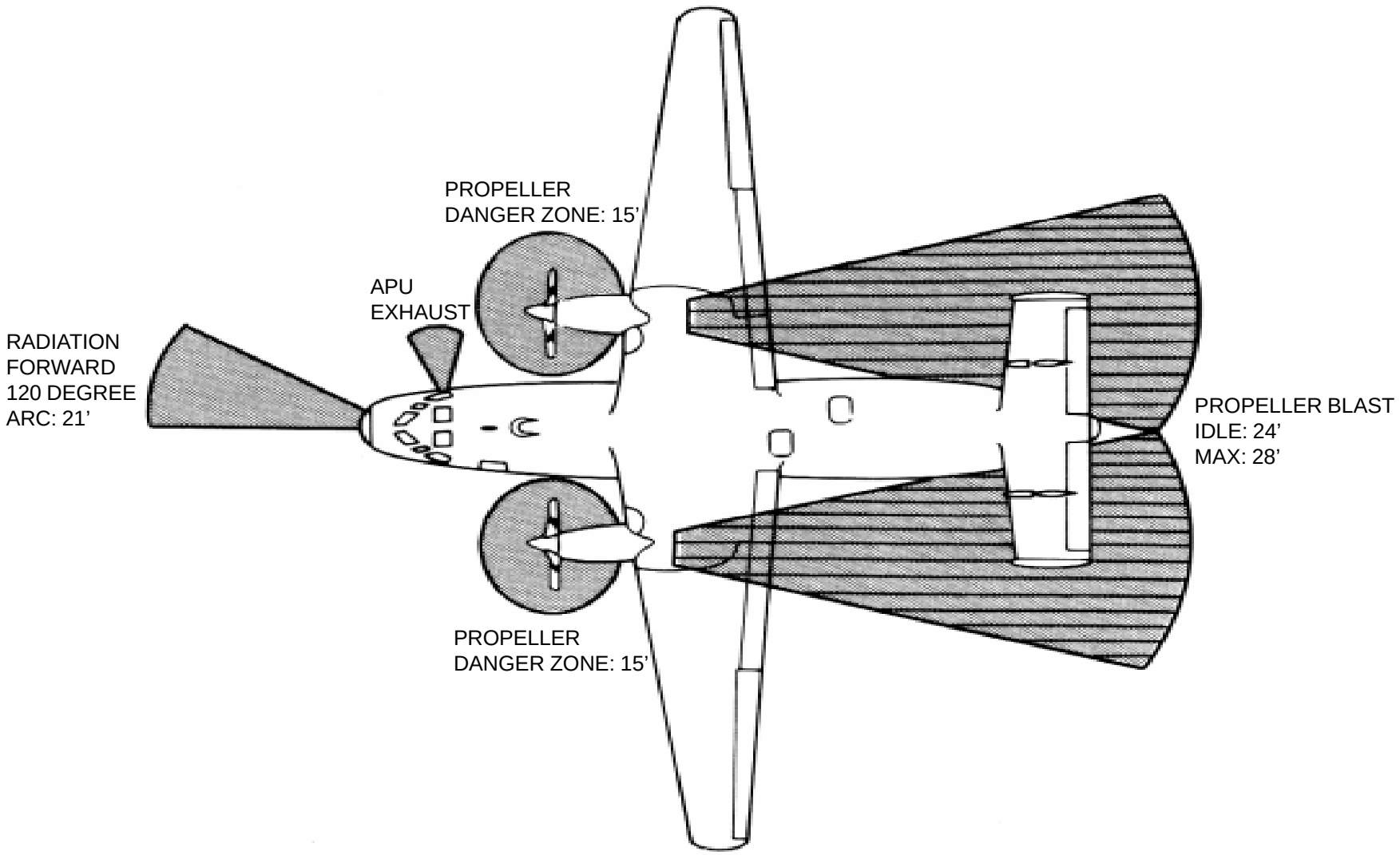

AIRFRAME MATERIALS

LEGEND

- ALUMINUM
- STEEL
- OTHER
  FIBERGLASS

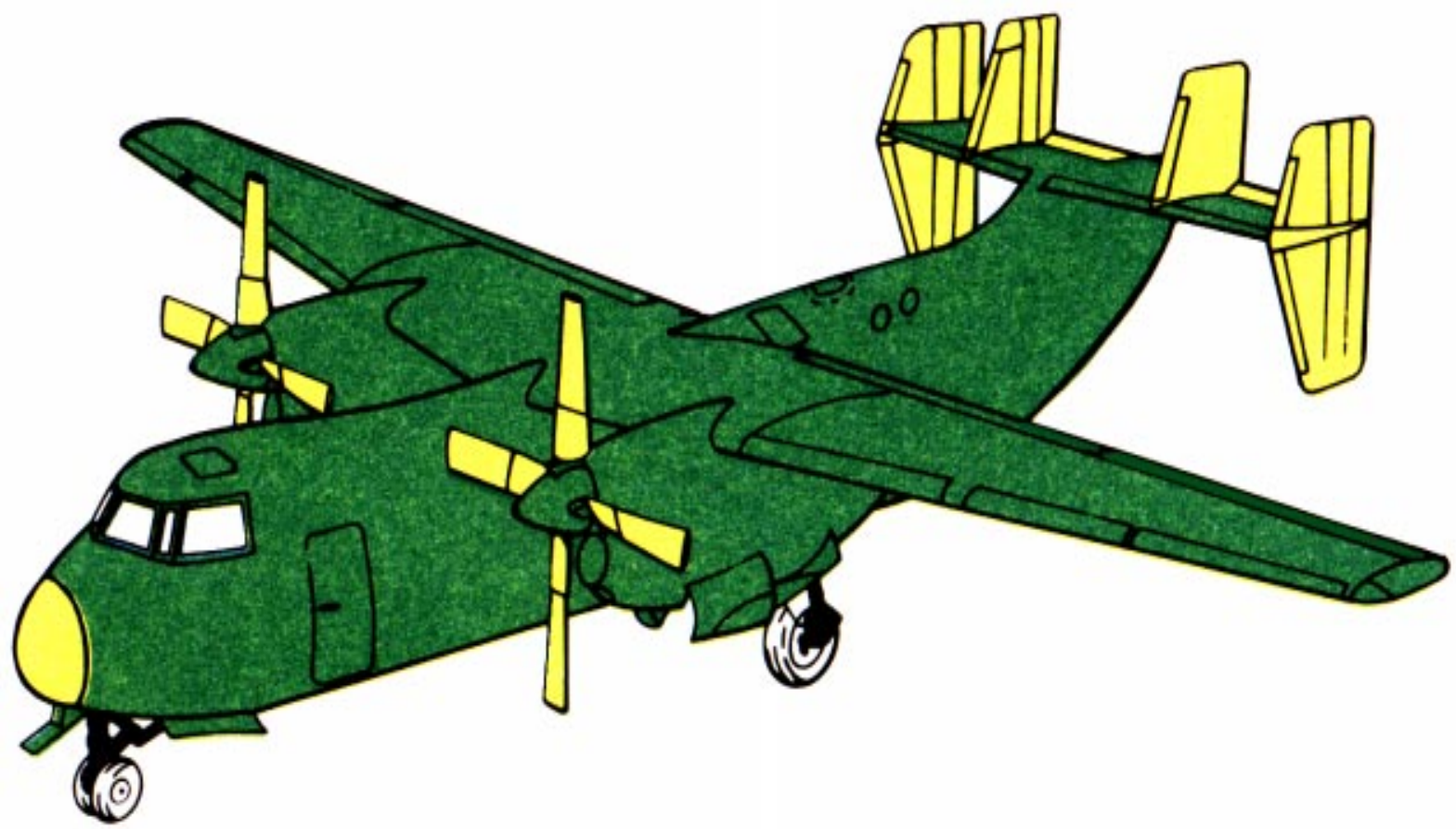

SPECIAL TOOLS/EQUIPMENT
Power Rescue Saw
Crash Ax

AIRCRAFT ENTY

1. NORMAL ENTRY

a. Enter the flight deck through the main entrance door on left side of fuselage. Turn release handle to unlock and pull door out and down.

b. Enter the cargo/passenger compartment through the ramp. If ramp is closed and hydraulic power is available, open access covers to selector valve on aft right side of fuselage. Place cargo and ramp selector valve handle to RAMP OPEN position. With ramp level, place ramp loading selector valve handle to RAMP GROUND position to lower ramp.

NOTE:
Cargo doors and ramp will open and ramp will stop in level position. Releasing handle will stop opening cycle at any point.

2. EMERGENCY ENTRY

a. Access may be gained through forward and aft emergency escape hatches on top of fuselage.

3. CUT-IN/FORCED ENTRY

a. If the main entrance, cargo door and ramp are inaccessible, chop or saw around pilot or co-pilot's side windows where indicated (see yellow highlited areas). Access to the cargo or passenger compartment is available, chop or saw out aft escape hatch.

NOTE:
Aircraft has three crew members: pilot, co-pilot and loadmaster. Aircraft can be configured with 12 litters or 28 passengers, or 3 master pallets, or 5 modular pallets.

NOTE:
Pnuematic system is 3000 PSI.

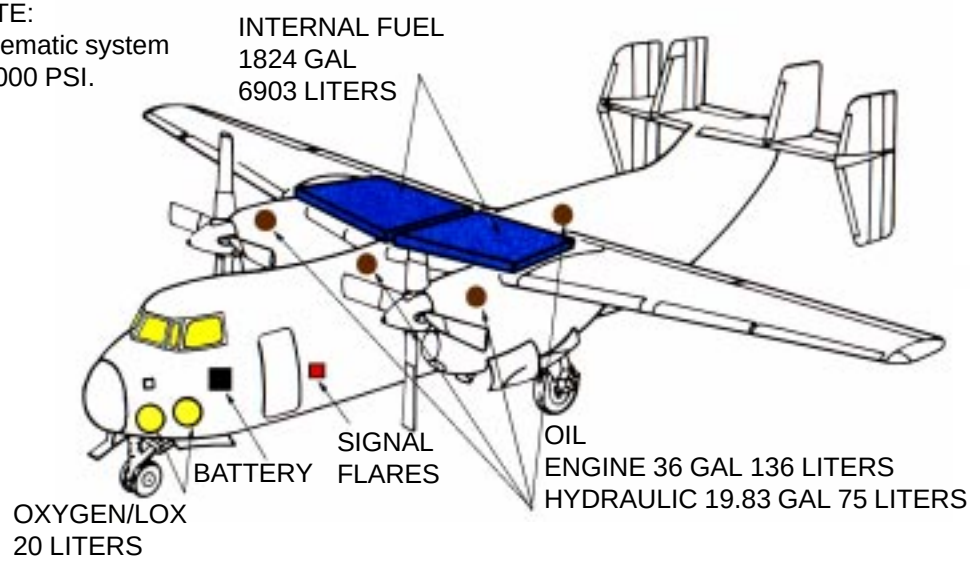

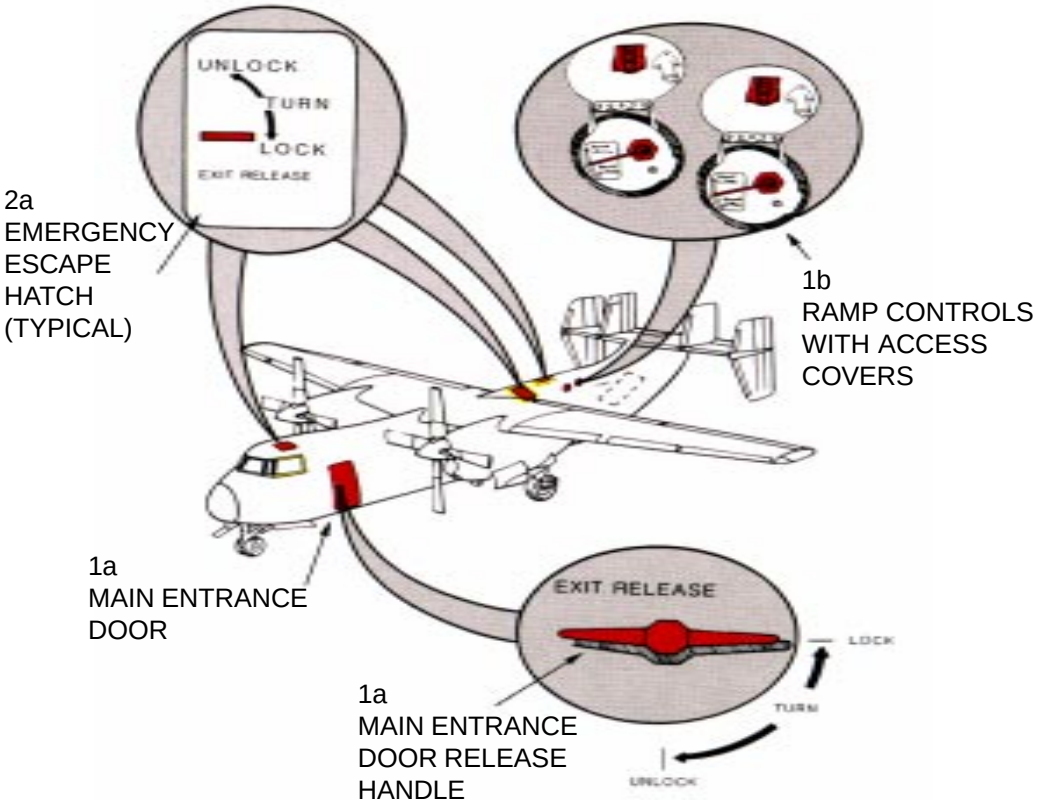

ENGINE/APU SHUTDOWN

1. ENGINE/APU SHUTDOWN

a. Depress trigger lock on underside of condition levers handles, located on center console and move levers to extreme AFT position.

b. Place left and right generator switches, located on overhead center panel, in OFF position.

c. Place the APU run/stop switch, located on the left console, in STOP position.

d. The battery is for the APU operation only and is located forward and below the co-pilot's compartment. Manually disconnect if battery power provides hazard.

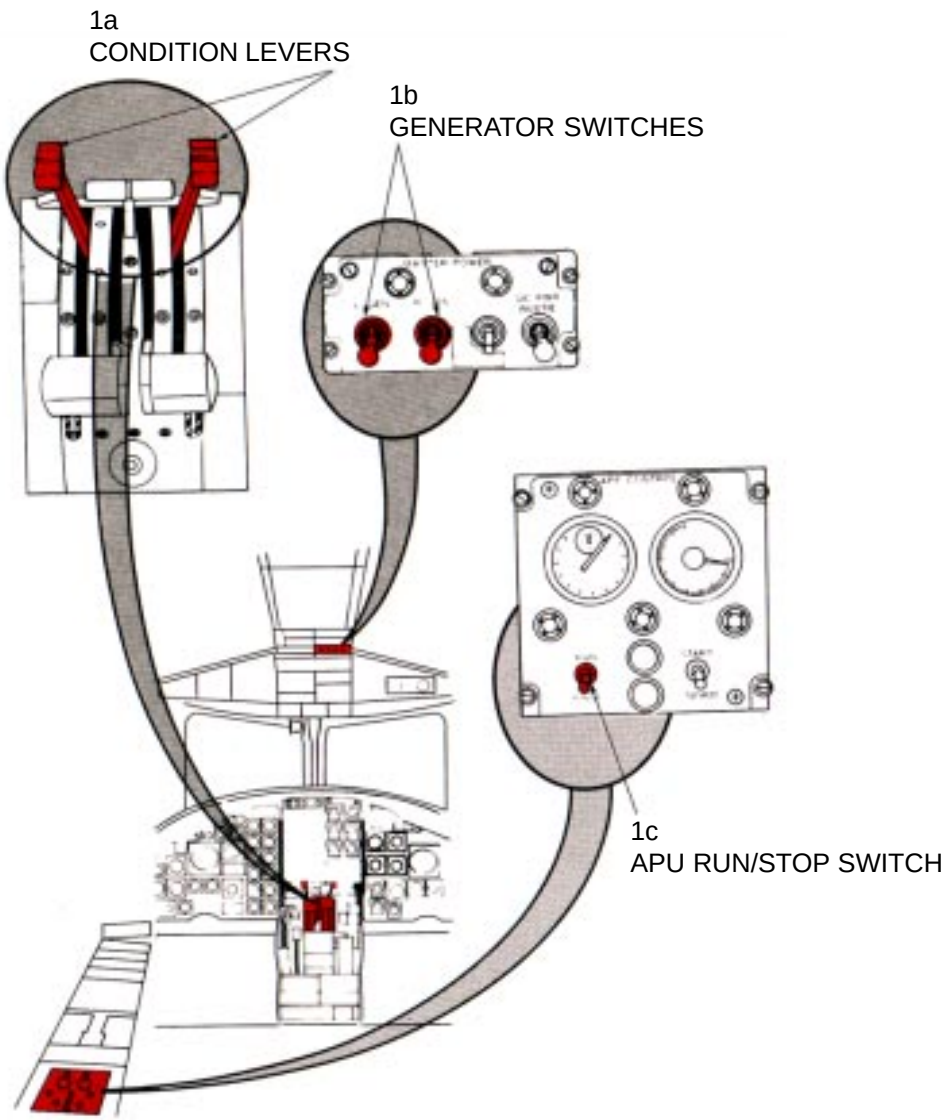

AIRCREW EXTRACTION

1. AIRCREW EXTRACTION

NOTE:
The pilot/co-pilot's seats may be equipped with standard shoulder straps and lap belts or equipped for use with an integrated harness. All other seats are equipped with standard shoulder harnesses and lap belts.

a. Release two lap belts, then two shoulder harness koch fittings.

b. Lift quick disconnect lever to release shoulder harnesses and lap belt.

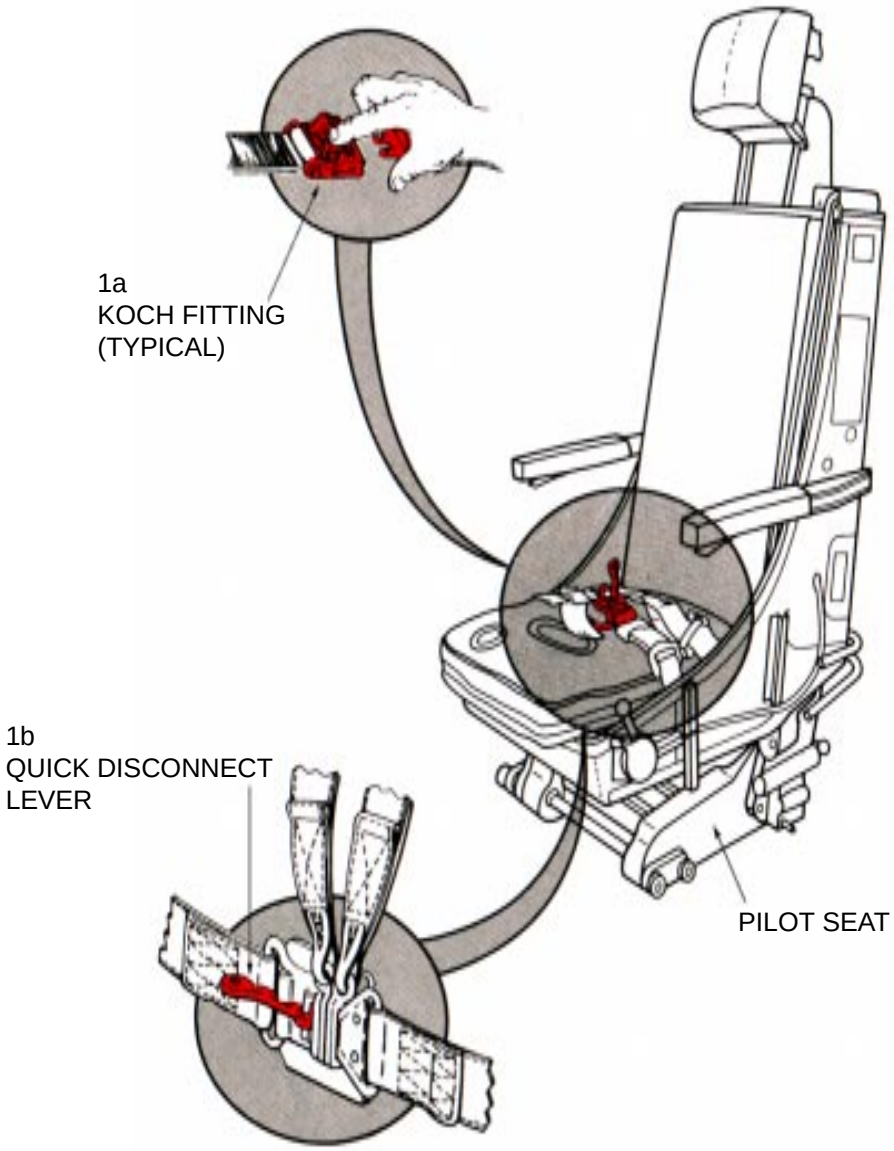

AIRCRAFT HAZARDS

NOTE:

The US Navy C-9 is similar to the USAF (V)C-9A/C. The commercial version is the DC-9. Refer to these aircraft for additional information.

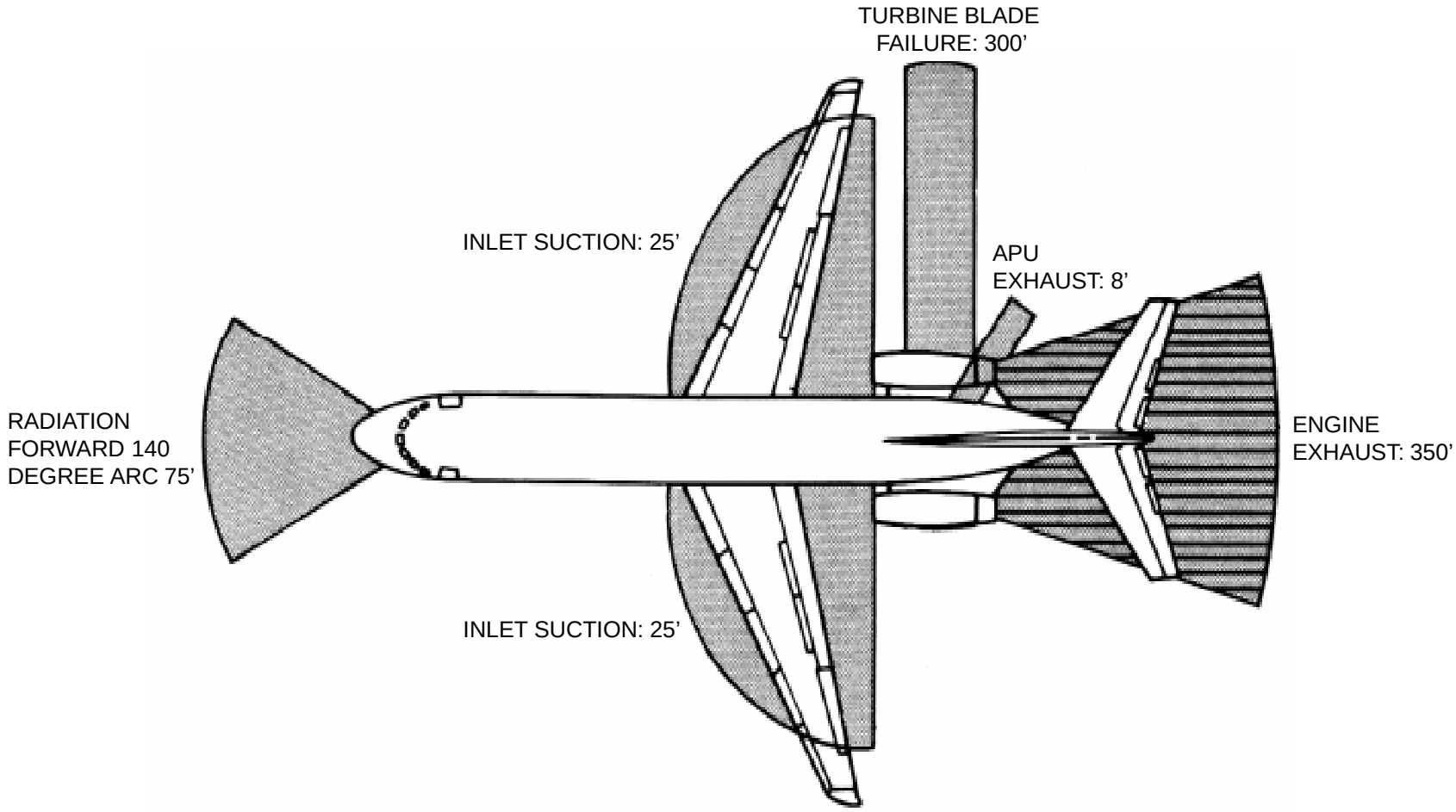

AIRFRAME MATERIALS

LEGEND

- ALUMINUM
- STEEL
- OTHER
  FIBERGLASS

SPECIAL TOOLS/EQUIPMENT
Power Rescue Saw
Crash Ax

AIRCRAFT ENTRY

1. NORMAL ENTRY

NOTE:
Normal entry to the flight compartment, and passenger and/or cargo compartment is through the forward entrance door, service entrance door, main cargo door, and pressure bulkhead door.

a. Pull forward entrance door handle (fwd left side of fuselage) out and rotate counter clockwise. Service door is located on right side of fuselage, pull handle and rotate clockwise.

b. Lift stairwell external door handle, located below forward entrance door, and raise to UP position.

c. Depress lower button marked DN to extend stairwell ladder.

NOTE:
If aircraft is shutdown, auxiliary power switch under latch handle must be held in the ON position while depressing down button.

d. Open rear stairway control panel, located on aft left exterior fuselage, push control handle forward to open position to release stairway, hold until stairway is fully open.

CAUTION

Stairway free falls to down position.

NOTE:
The aircraft listed below carry 160 ft^3 of gaseous oxygen on board:

162390 - 162393
162753 - 162754
163208
163511 - 163513
163036 - 163037

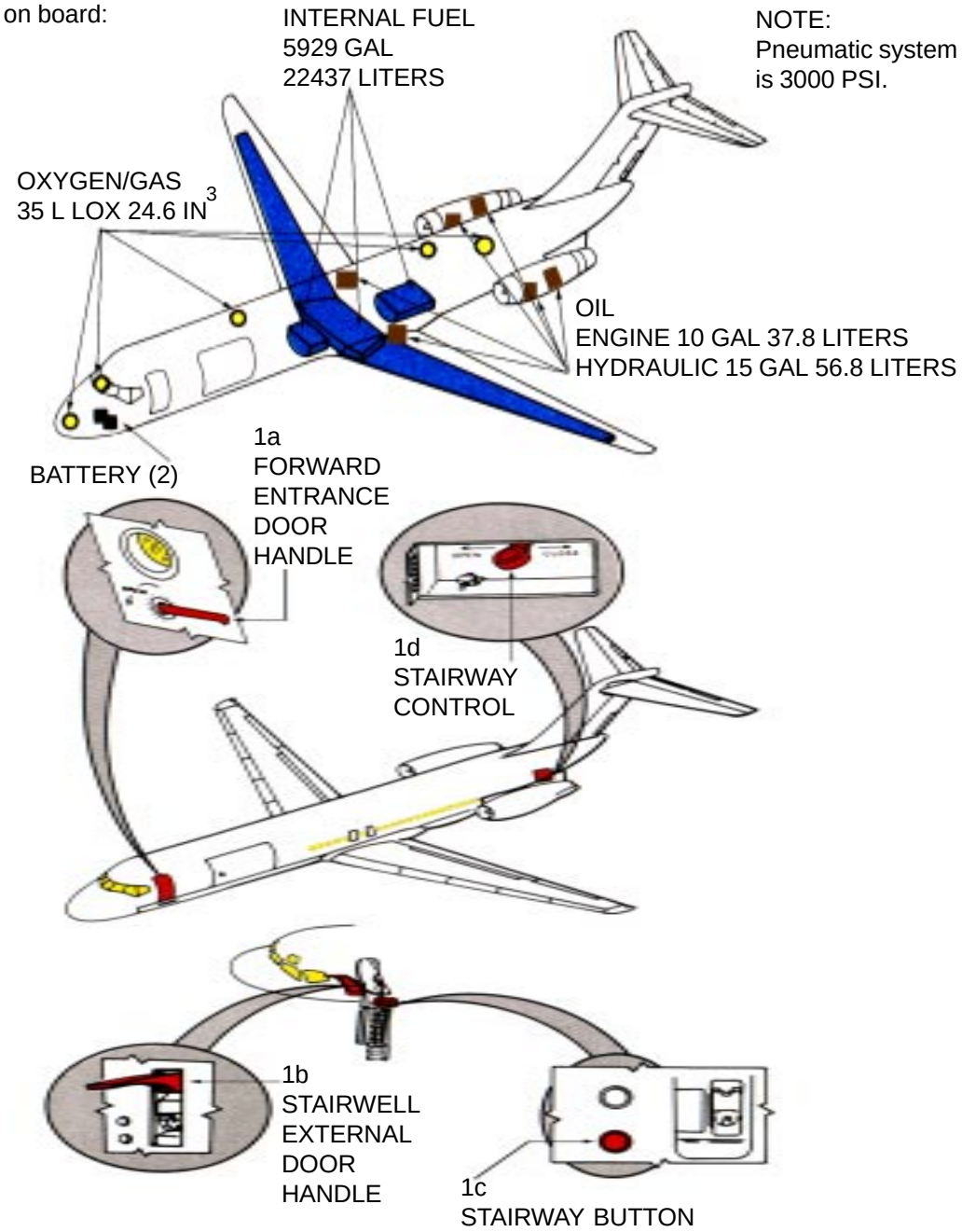

AIRCRAFT ENTRY-Continued

2. EMERGENCY ENTRY

NOTE:
If normal entry doors are inaccessible, entry may be obtained through the overwing emergency entry doors, the jettisonable tail cone area, and the clear view windows.

a. Push overwing exit door handle (two doors are located over each wing), pull handle to unlatch door, push in and lift up forcibly.

b. Push in jettisonable tail cone T-handle door, located on fuselage forward of tail cone. Pull T-handle to jettison tail cone. Jettison door is approximately 8.5 feet high.

WARNING

Exercise caution when releasing tail cone. Tail cone free falls when released from aircraft.

NOTE:
Tail cone entrance and aft stairway can not be used at the same time.

3. CUT-IN/FORCED ENTRY

a. The aircraft does not have any cut out areas marked off. Use a power rescue saw or ax to gain access through a designated cargo compartment. A window shade in the down position should indicate a cargo compartment.

WARNING

Exercise extreme caution prior to forcible entry into any compartment to ensure passenger safety.

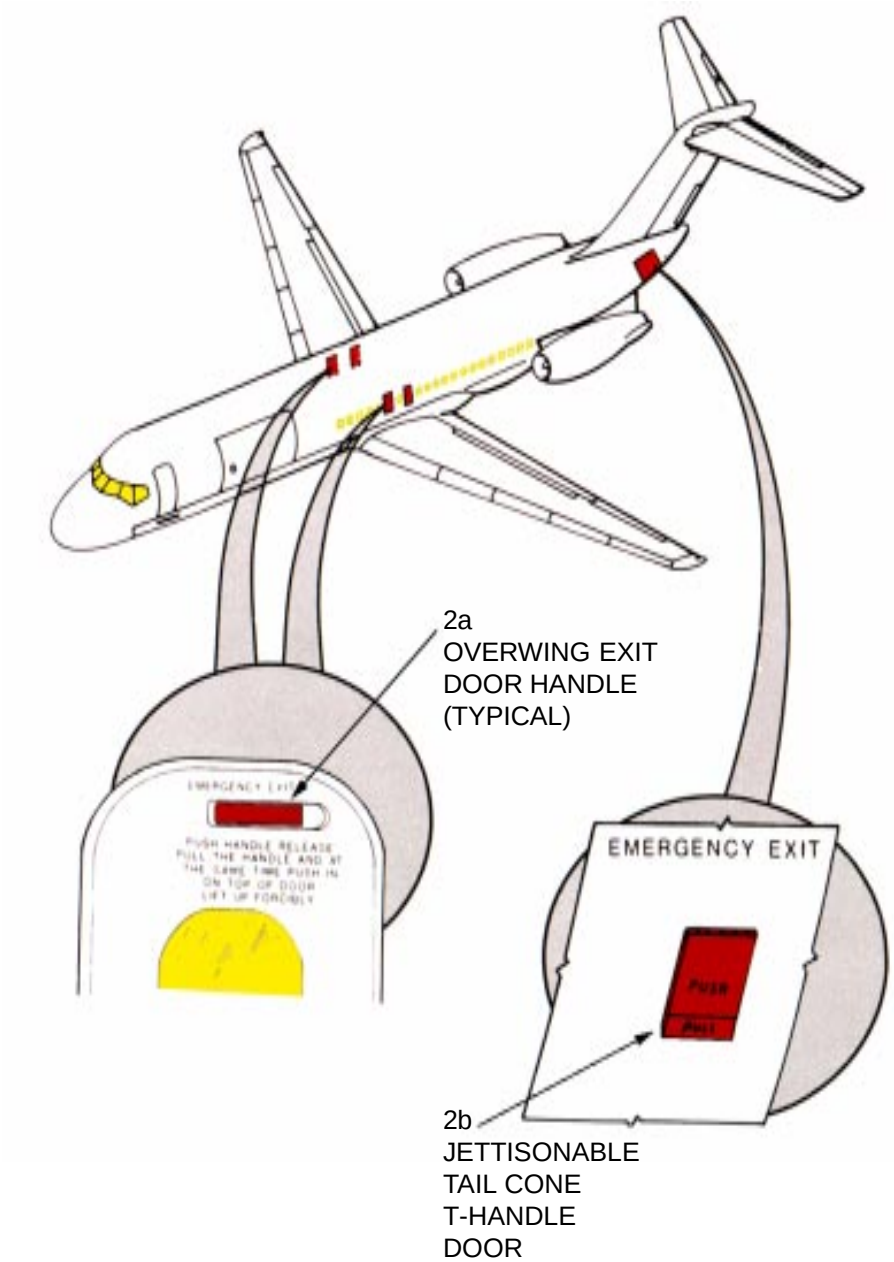

ENGINE/APU SHUTDOWN

1. ENGINE AND APU SHUTDOWN

a. Retard throttles, located on center console, to FULL AFT position.

b. Pull engine fire shutoff T-handles, located on upper portion of instrument panel.

c. Place APU fire control switch, located on overhead switch panel, in OFF and AGENT ARM position.

d. Place battery switch, located below APU control panel, in OFF position.

e. To externally disconnect batteries, located in electrical/electronic compartment, remove quick disconnect fitting(s).

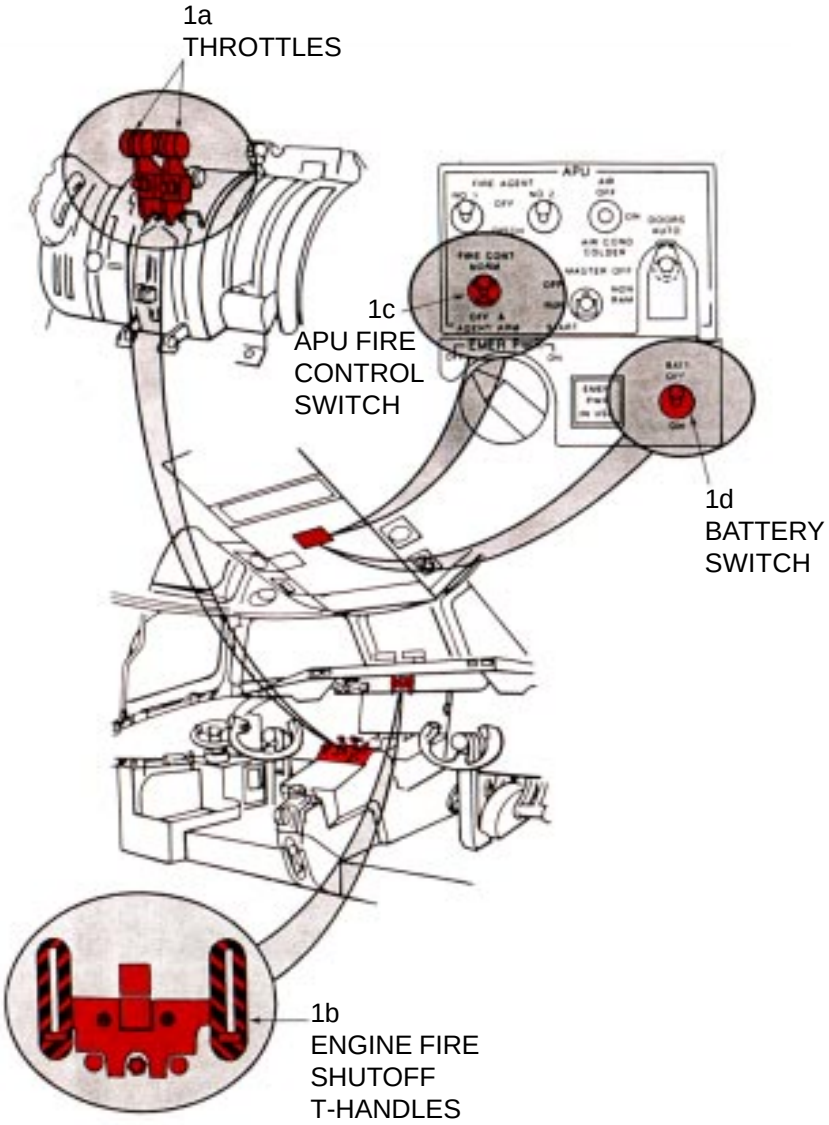

AIRCREW EXTRACTION

1. AIRCREW EXTRACTION

NOTE:
Pilot, co-pilot, and crewchief are attached to the seats by shoulder harnesses secured to a lap belt equipped with a quick disconnect buckle. Passengers have lap belts only.

a. Rotate restraint quick disconnect fitting to release shoulder harnesses and lap belt.

b. Rotate crewmember seat armrests up for ease of extraction.

c. Lift buckle cover to release lap belt (airline type) for passengers.

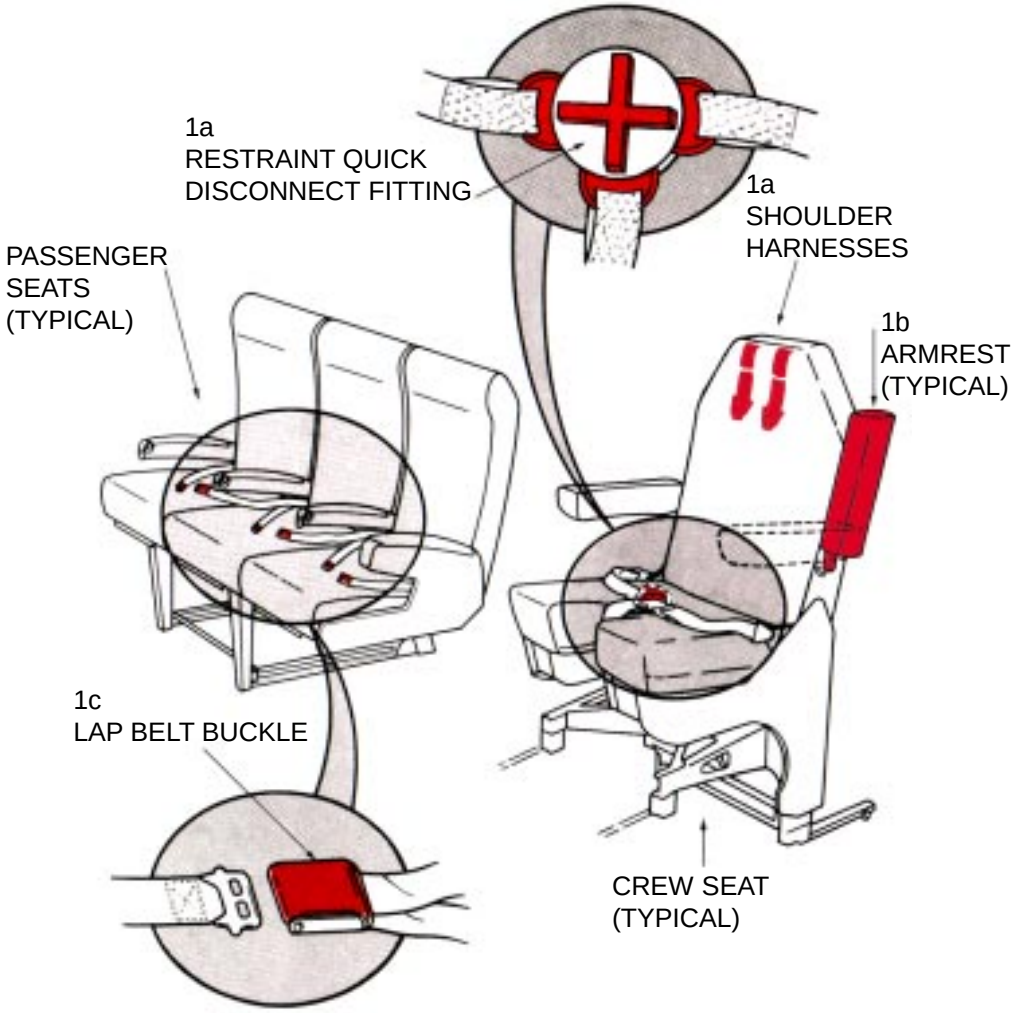

AIRCRAFT HAZARDS

NOTE:

The US Navy UC-12 is similar to the USAF C-12F and US Army C-12A/C. Refer to these aircraft for additional information.

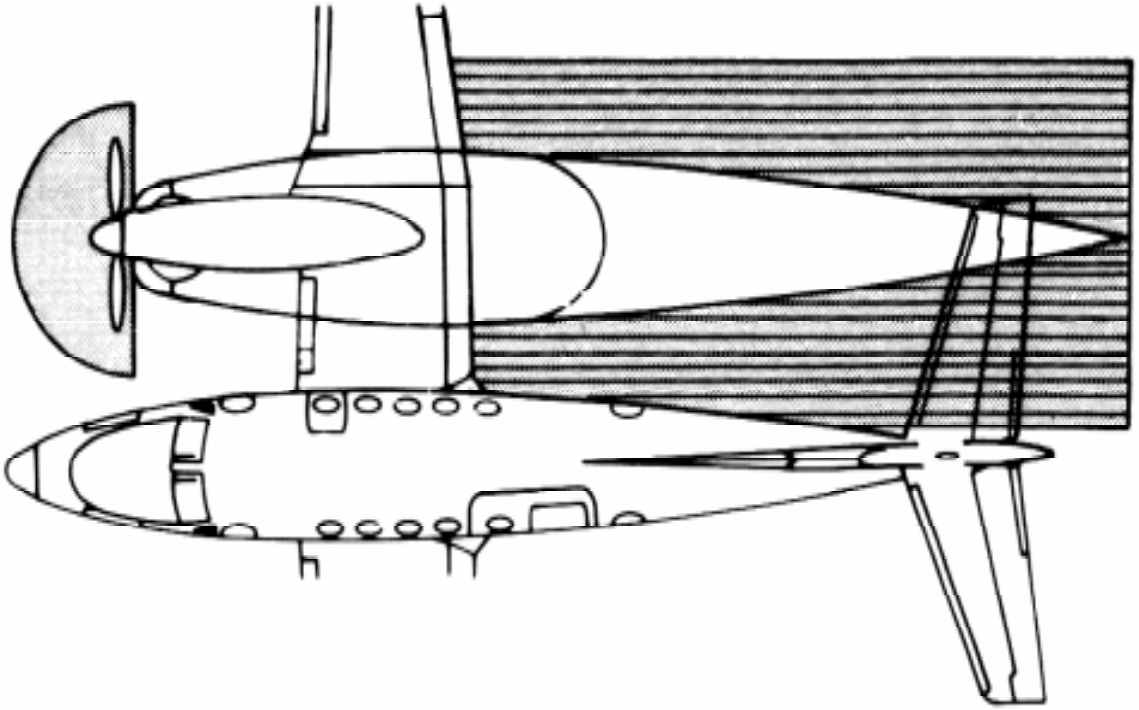

AIRFRAME MATERIALS

LEGEND

- ALUMINUM
- STEEL
- OTHER
  FIBERGLASS

SPECIAL TOOLS/EQUIPMENT
Power Rescue Saw
Crash Ax

AIRCRAFT ENTRY

1. NORMAL ENTRY

a. A swing-down door provides a stairway for normal entry. The door locking mechanism is operated by interconnected handles, one inside and one outside. A button above the door handle, must be depressed before the handle can be rotated to open the door.

2. EMERGENCY ENTRY

a. A plug-type emergency exit hatch is located at the first cabin window on the right side of the aircraft. When released, the hatch removes from the frame towards the inside of the cabin.

b. The hatch is released from the outside with a flush mounted pull-out handle.

NOTE:
Hatch may be locked from the inside with a key.

3. CUT-IN/FORCED ENTRY

a. Cut out entry areas as indicated in diagram using power rescue saw or crash ax.

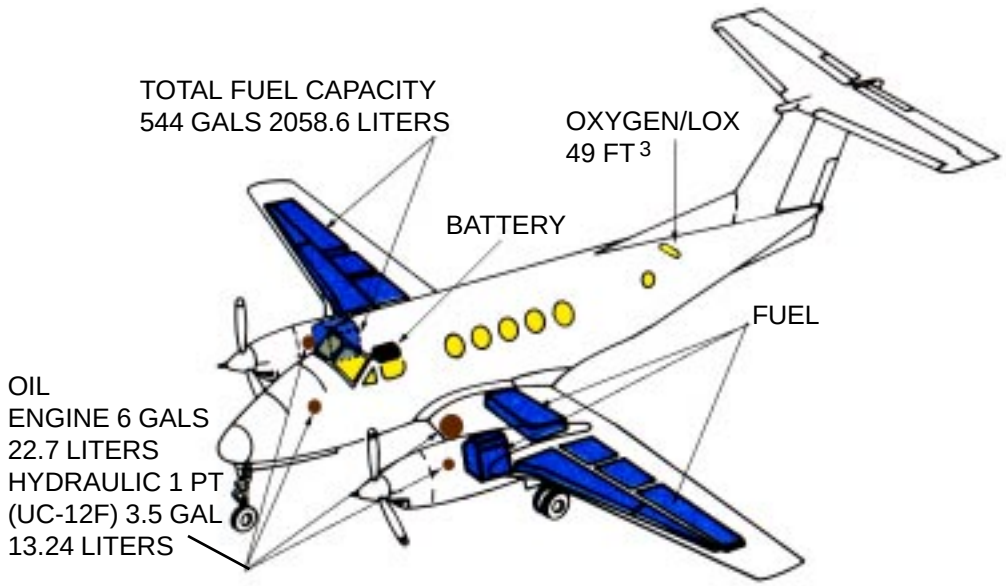

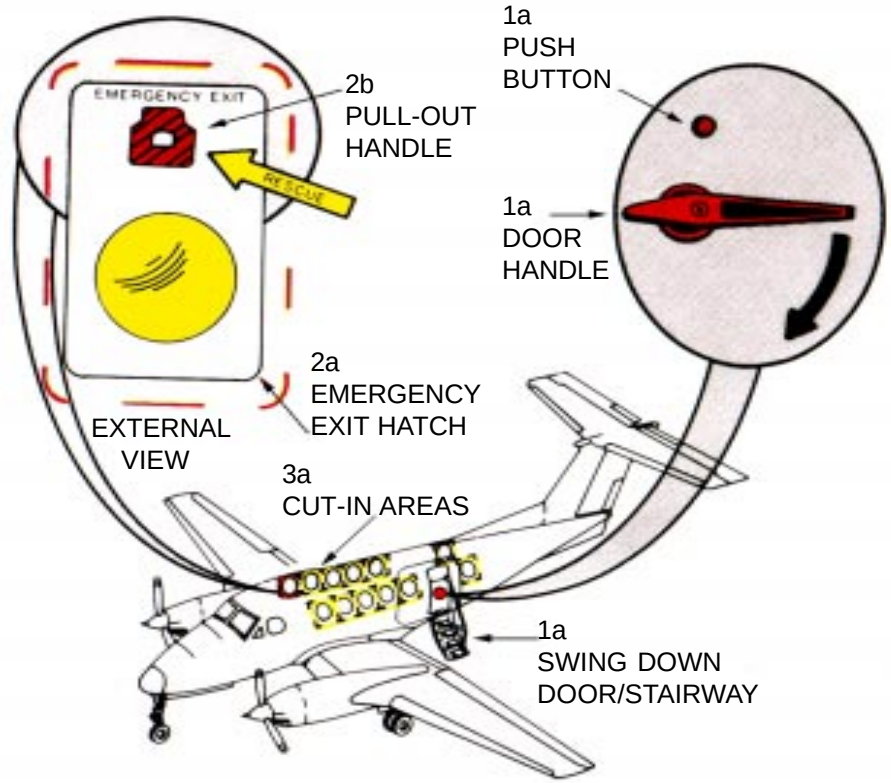

ENGINE SHUTDOWN

1. ENGINE SHUTDOWN

a. Move condition levers, located on center pedestal, aft to CUT OFF position.

b. Place fuel valve switches, located on pilot's left control panel, in CLOSED position by raising guard and moving switches down.

c. Place master gang bar, located on center pedestal, in DOWN position.

d. To externally disconnect the battery, located in the right wing center section beneath an access cover secured with screws, use the quick disconnect fitting.

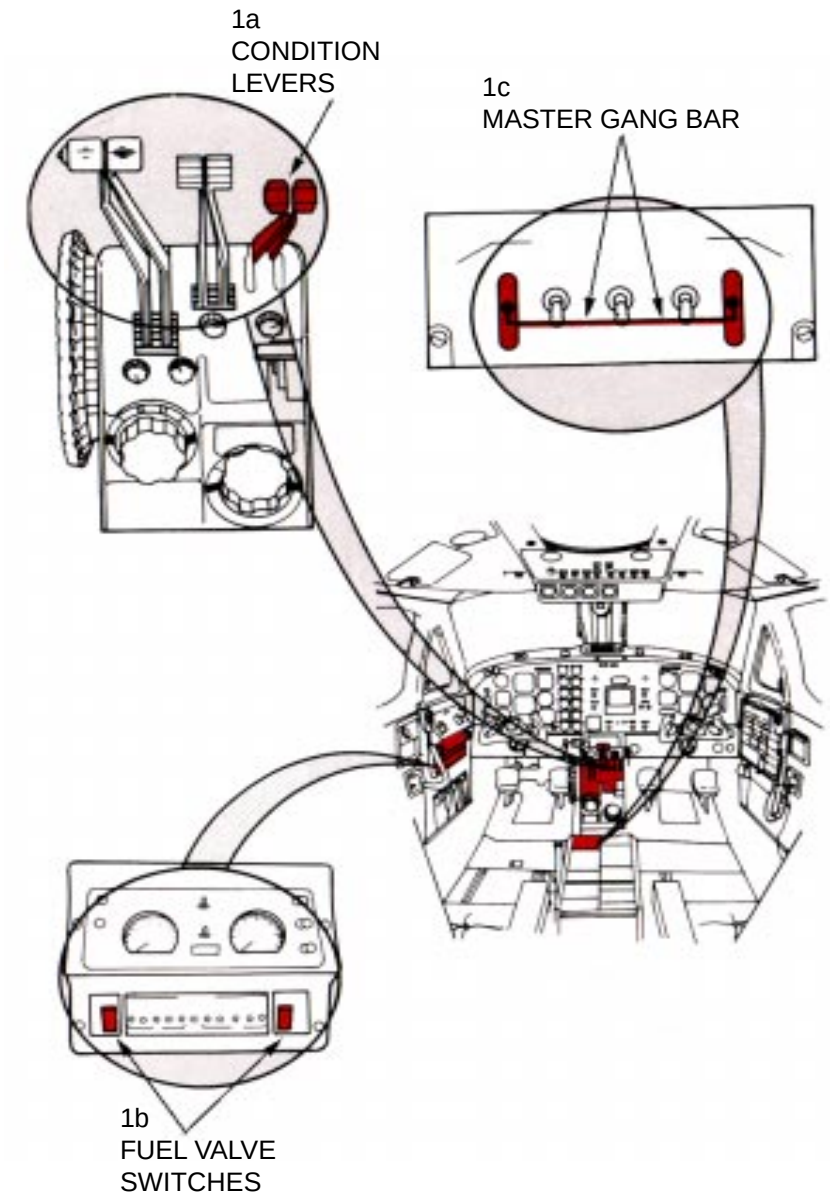

AIRCREW EXTRACTION

1. AIRCREW EXTRACTION

NOTE:
Pilot and co-pilot are attached to the seats by a shoulder harness attached to a lap belt by a quick disconnect buckle. Passengers have lap belts only.

a. Lift buckle cover to release shoulder harnesses and lap belt.

b. Lift buckle cover to release lap belt (airline type) for passengers.

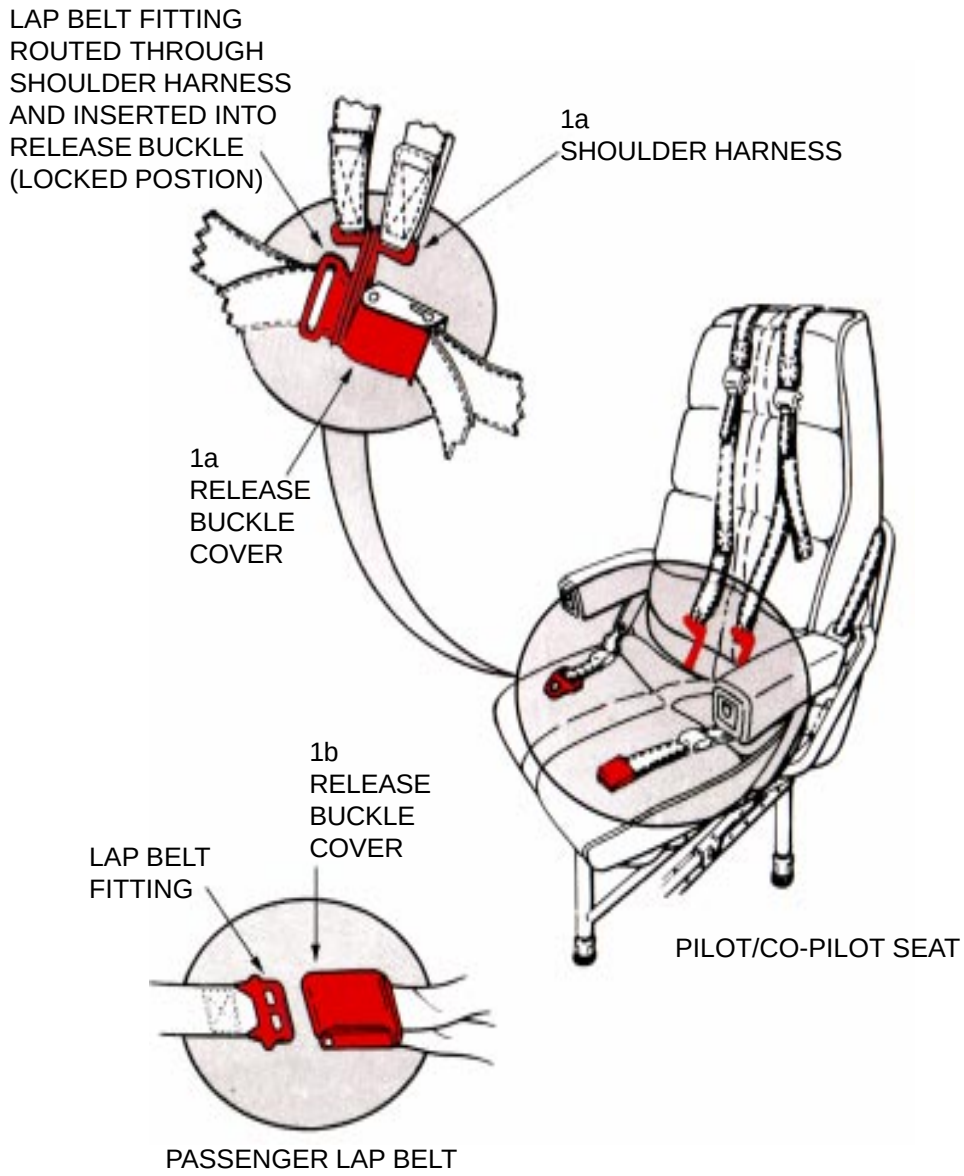

NOTE:

The US Navy C-20 is the same as the USAF C-20. Refer to Chapter 6, pages C-20.1 thru C-20.4 for complete procedures. For additional information refer to the USAF C-20H on pages C-20H.1 thru C-20H.8.

UC-26

NOTE:

The US Navy UC-26 is similar as the USAF C-26. Refer to Chapter 6, pages C-26.1 thru C-26.7 for complete procedures.

C-130

NOTE:

The US Navy C-130 is the same as the USAF C-130. Refer to Chapter 6, pages C-130.1 thru C-130.13 for complete procedures.

NOTE

Chapter 24 contains emergency rescue and mishap response information for the following aircraft:

USN	**T-2**
USN	**T-34C**
USN	**T-39C**
USN	**T-44**
USN	**T-45A**

CHAPTER 24

U.S. NAVY

TRAINER

AEROSPACE EMERGENCY RESCUE AND MISHAP RESPONSE INFORMATION

24-1. INTRODUCTION AND USE.

24-2. This section contains emergency rescue and mishap response information illustrations in alphanumerical order relative to type and model of aircraft. This arrangement of illustrations is maintained from Chapter 4 throughout the remainder of the publication.

24-3. GENERAL ARRANGEMENT.

24-4. Aircraft type designation has been positioned in the upper right corner of the horizontal illustration for rapid identification. Additional aids to rapid orientation are:

a. Recent technological advances in aviation have caused concern for the modern firefighter. Aircraft hazards, cabin configurations, airframe materials, and any other information that would be helpful in fighting fires, the locating and rescue of personnel will be added as the information becomes available.

b. Suggested special tools/equipment are listed in the upper left corner, on the Aircraft/Entry page of each listed aircraft.

c. Procedural steps covering emergency/normal entrances, cut-ins, engine/APU shutdown, safetying ejection/escape systems, and aircrew extraction are outlined on the left side of each page with coordinated illustrations on the right.

d. Illustrations located on right side of pages are coordinated with text by numerals and small letters depicting both paragraph and subparagraph on the page.

e. Each illustration is consistently colored and/or pattern keyed to highlight essential emergency rescue information.

f. Details are pulled directly from the illustration to highlight an area, thus eliminating unnecessary searching for desired information.

AIRCRAFT DIMENSIONS

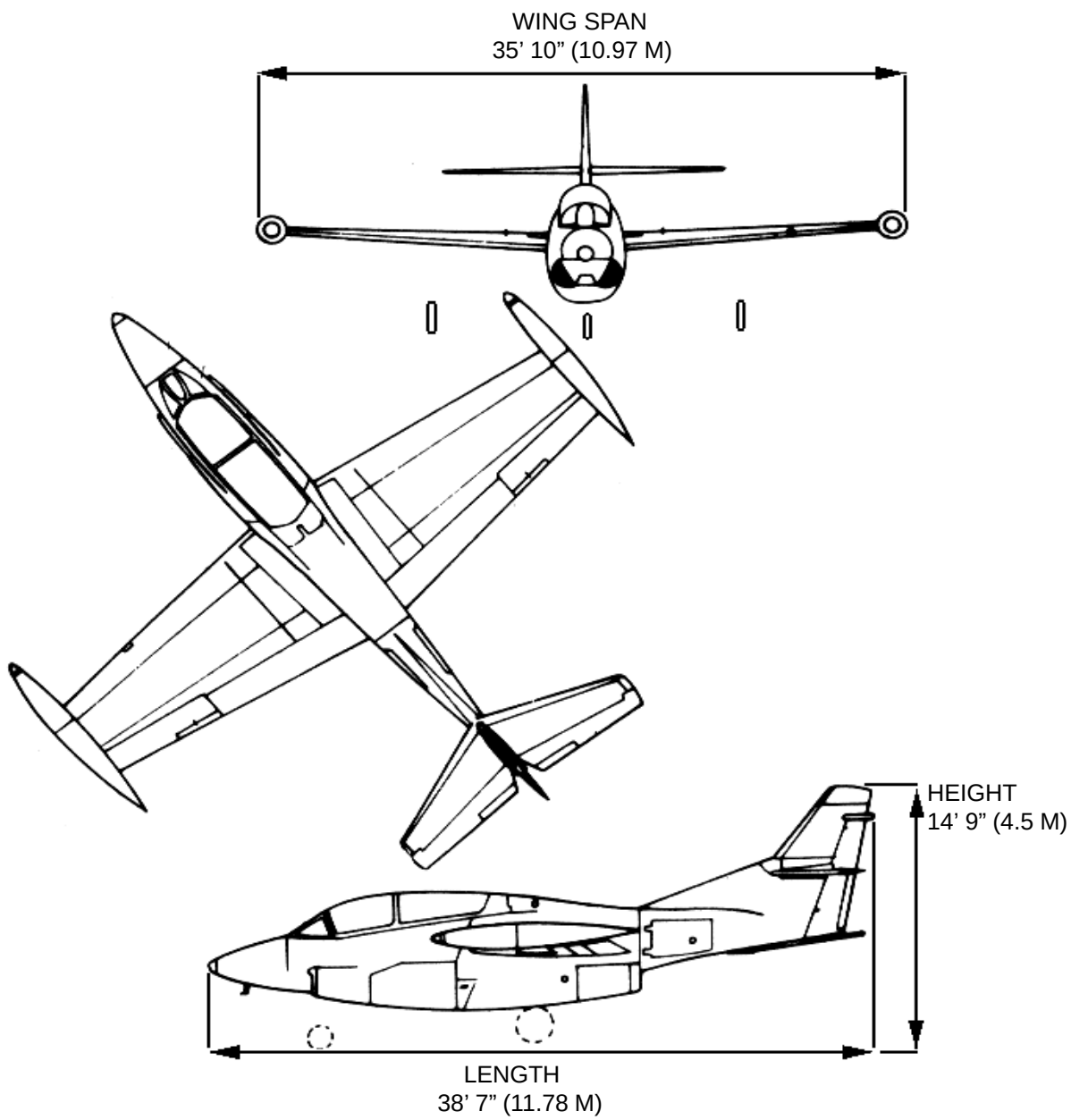

AIRCRAFT HAZARDS

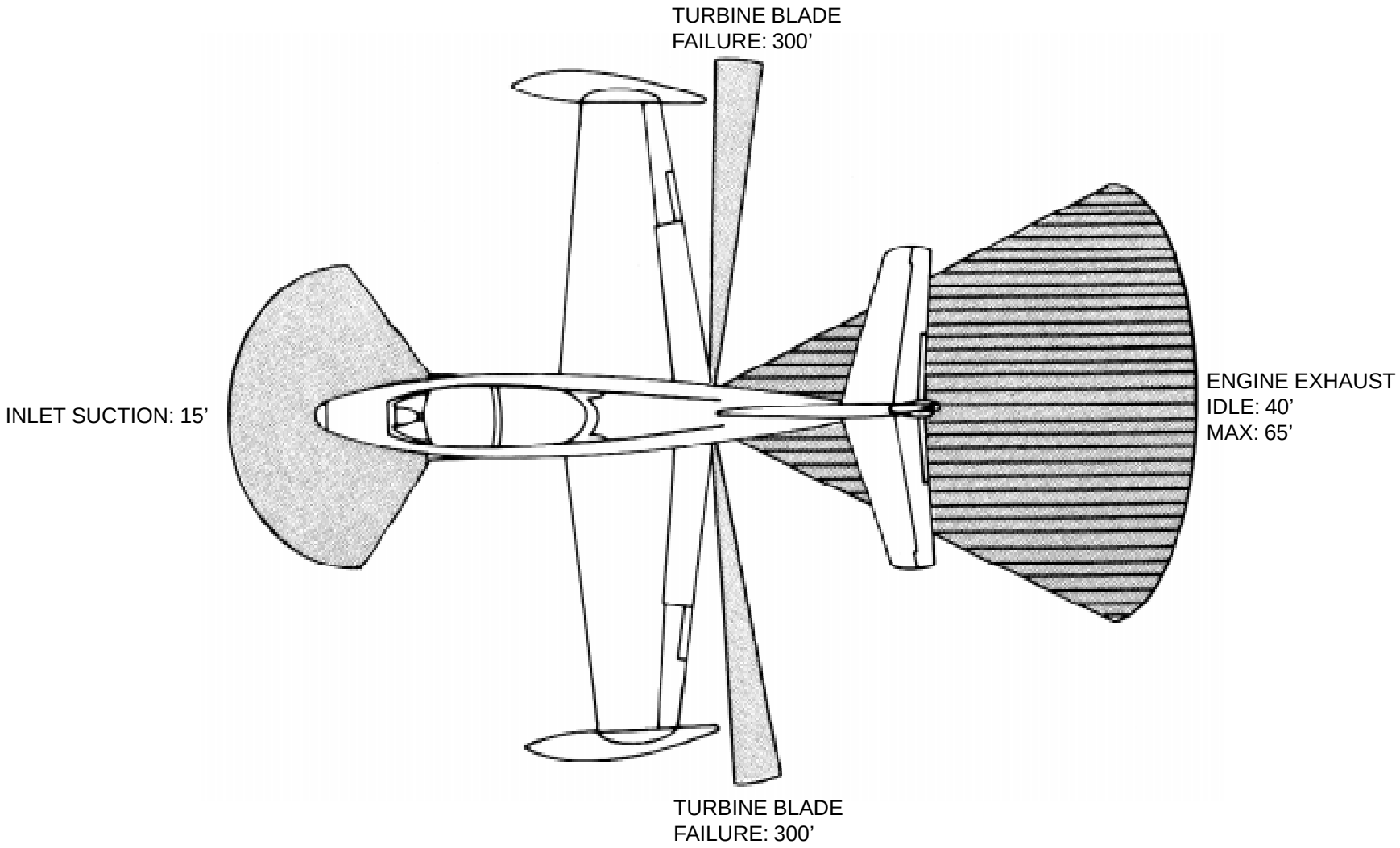

AIRCRAFT HAZARDS-Continued

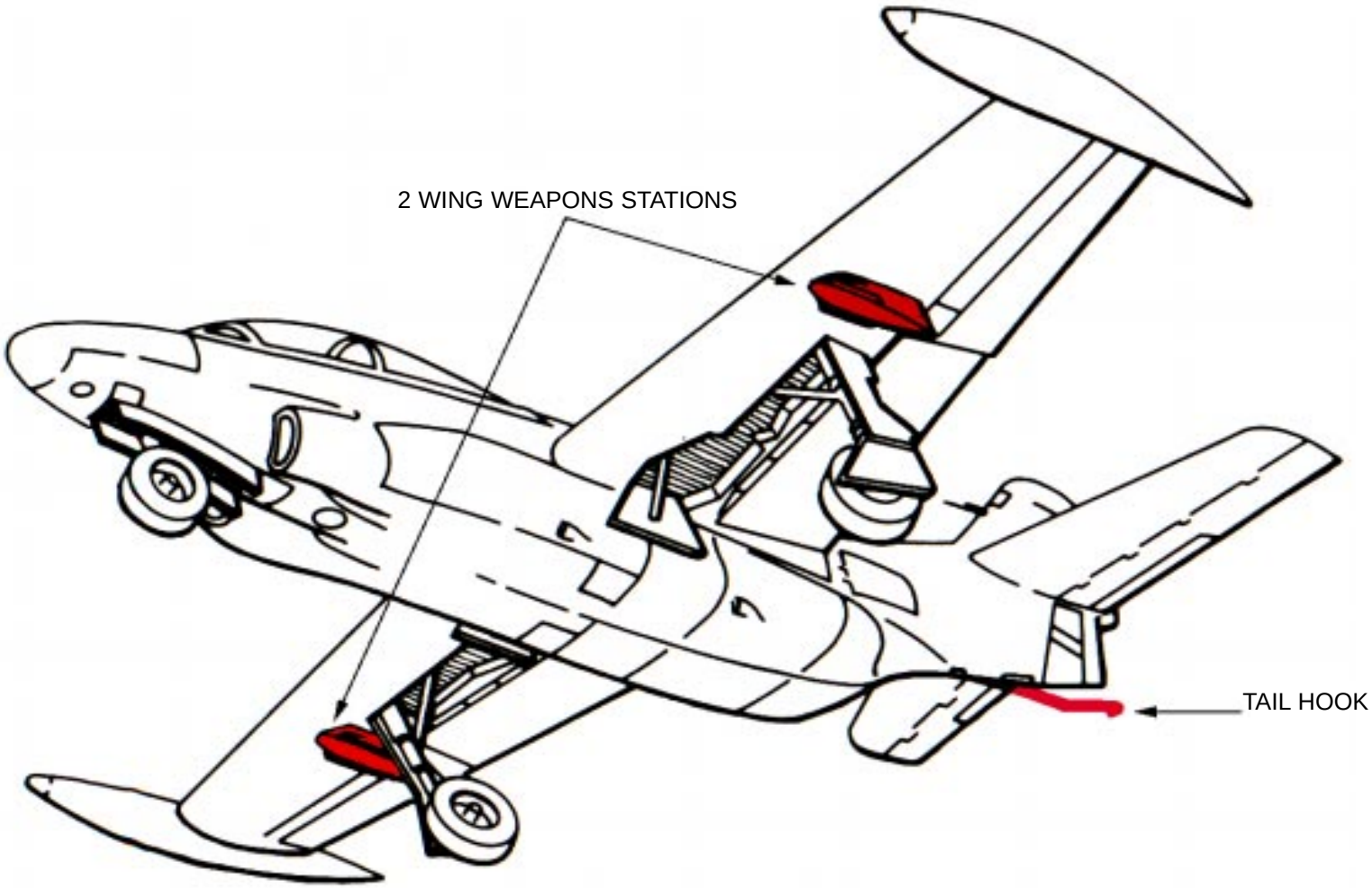

AIRFRAME MATERIALS

LEGEND

- ALUMINUM
- STEEL
- OTHER FIBERGLASS

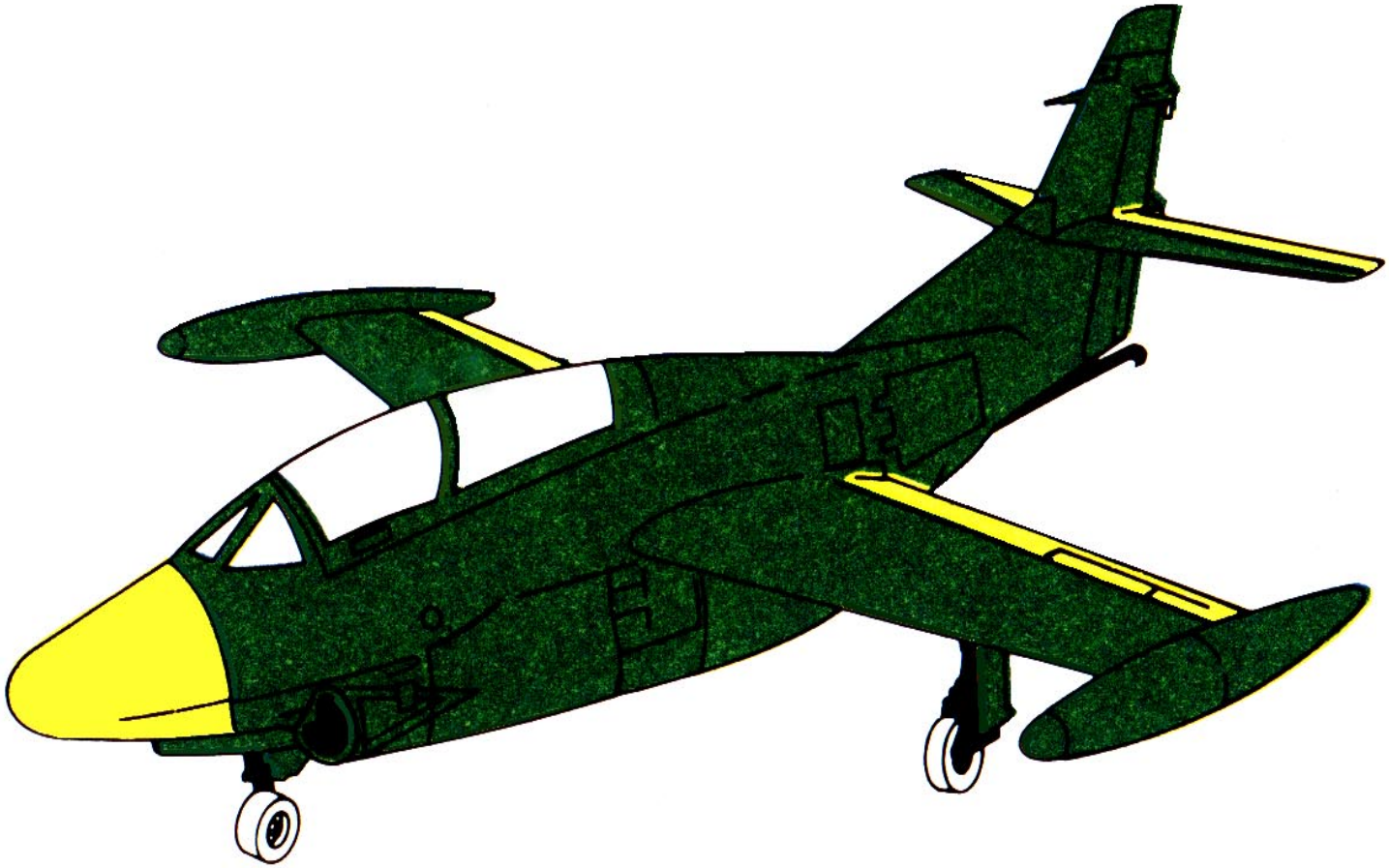

SPECIAL TOOLS/EQUIPMENT
Power Rescue Saw
Crash Ax

AIRCRAFT ENTRY

1. NORMAL ENTRY

a. An external electrical canopy switch, located on the left side of the fuselage opens the canopy vertically to full open position in 7 seconds.

WARNING

Do not actuate this switch for emergency entrance to cockpit. Use of electrical power can ignite fuel or other flammable material in damaged aircraft.

2. MANUAL ENTRY

NOTE:
Canopy weighs about 2000 pounds. Two rescue personnel will be required to lift canopy to maximum height.

a. Push button and pull left external canopy manual release handle full out (90 degrees).

b. Pull canopy aft about 1 inch to release internal latches.

c. Insure impact area is clear of personnel, then manually raise canopy until canopy falls off to either side.

3. EMERGENCY ENTRY

a. Insure impact area is clear of personnel, then pull external canopy jettison handle. Handle is located in circular panel on left side of fuselage.

4. CUT-IN/FORCED ENTRY

a. Canopy is made of acrylic plastic and may be cut with power rescue saw or crash ax. Cut along all 4 sides of canopy frame.

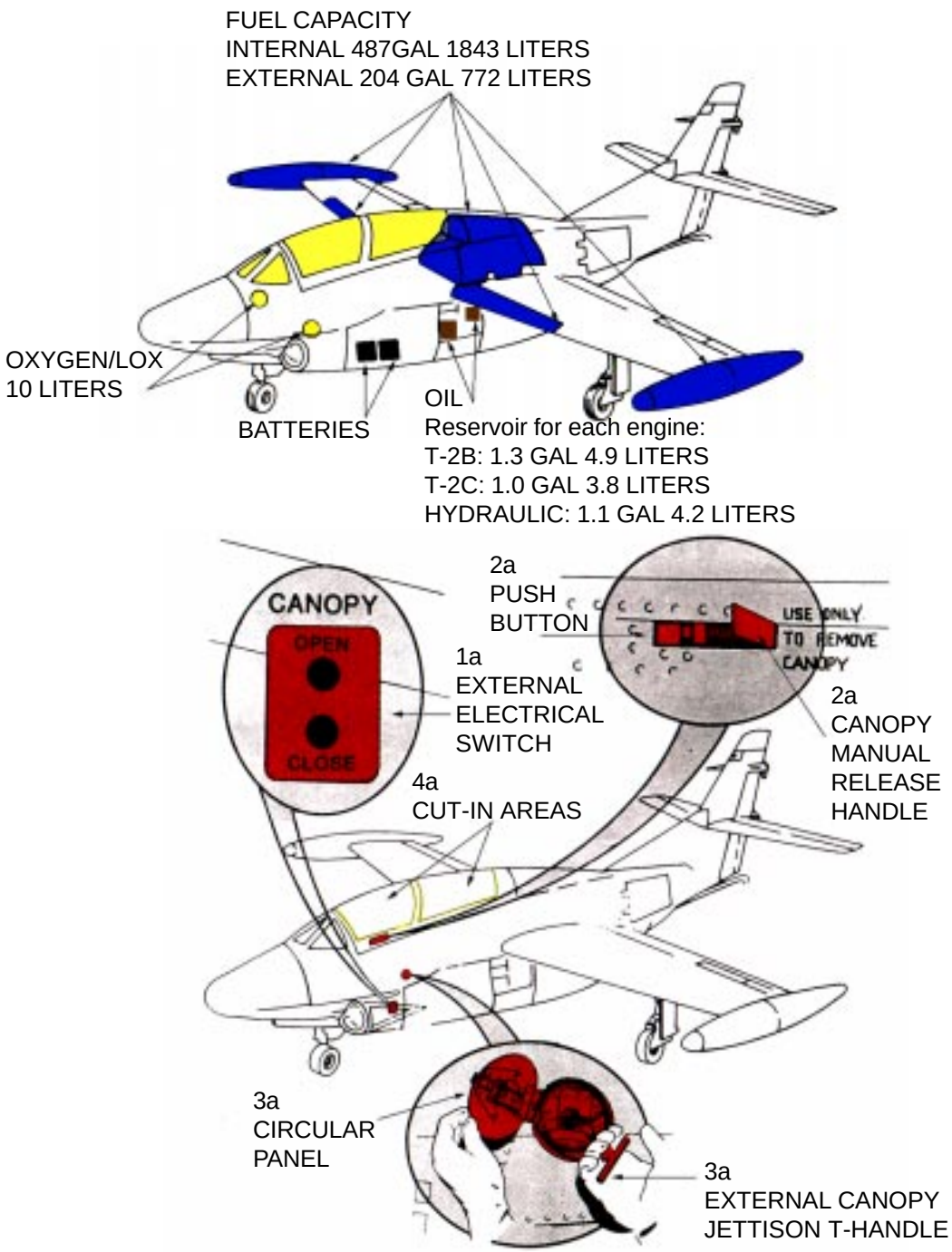

CANOPY SAFETY AND ENGINE SHUTDOWN

1. CANOPY SAFETY

a. To prevent accidental discharge of pneumatic canopy remover tube, install safety pins in the canopy release handle located in the forward left corner of each cockpit.

2. ENGINE SHUTDOWN

a. Depress PCL idle stop button if installed. Pull power control levers, located on left console, aft and around detent to FULL CLOSED position.

b. Place No. 1 and No. 2 engine master switches, located left console forward of power control levers in OFF position.

c. Place battery switch, located forward right console, in NORM position.

d. To externally disconnect the batteries, located in a access door forward left side of fuselage below the canopy. Batteries are equipped with quick disconnect plugs.

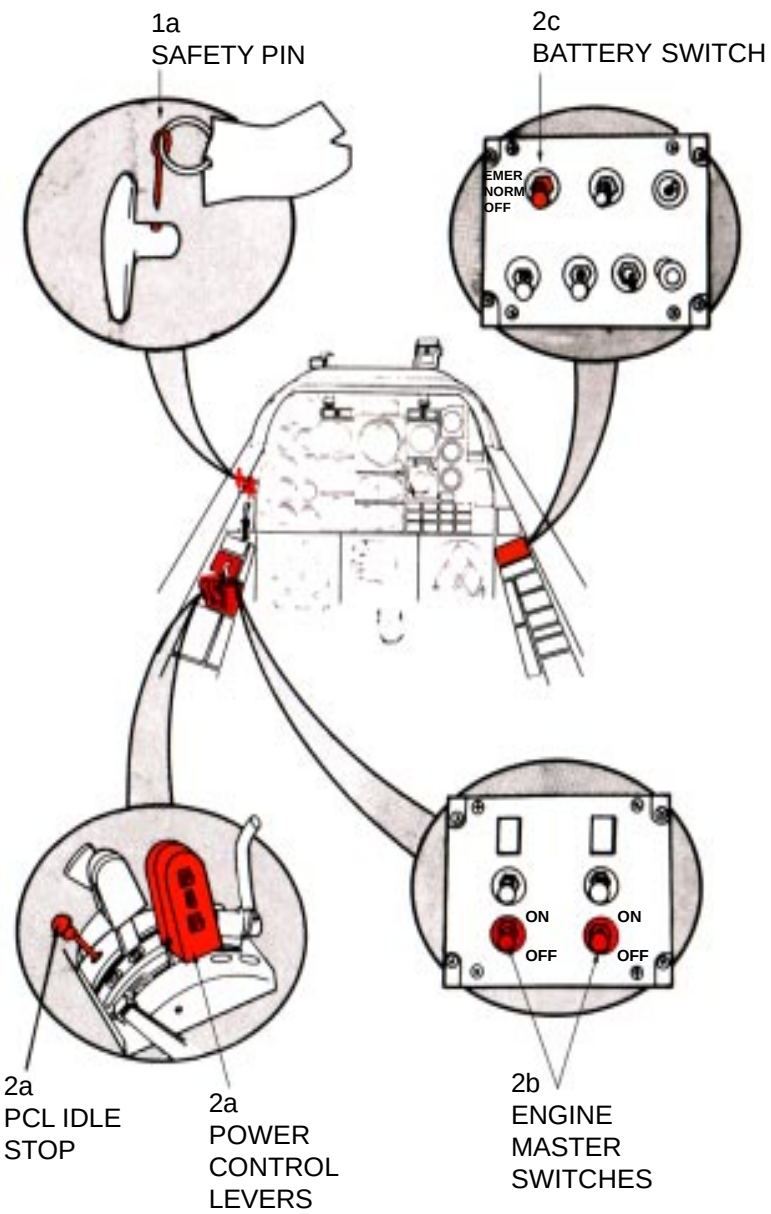

NORTH AMERICAN LS-1A EJECTION SEAT

1. GENERAL INFORMATION

The NORTH AMERICAN LS-1A is a catapult rocket ejection seat that provides support and necessary environmental equipment for crewmembers during flight, and a means of fast, safe escape during emer gency flight conditions. The ejection seat system will safely assure the sequenced escape of both pilots, from ground level at a minimum altitude and aircraft speed capability. The seat ejection system has the capability of a zero altitude-zero speed ejection only if the canopy is not on the aircraft.

The basic structure of the seat consists of aluminum, built to withstand high G-loads, support of all the components, and form the main framework for the seat.

The basic componets of the seat assembly include a catapult tube, rocket tube, ballistic operated inertia reel, seat bucket, parachute, and survival equipment.

This ejection seat presents definite hazards which may cause fatal injuries to uninformed and careless person nel. Firefighting/rescue personnel must become thoroughly familiar with the locations and the safetying of the seat components in both normal and emergency conditions.

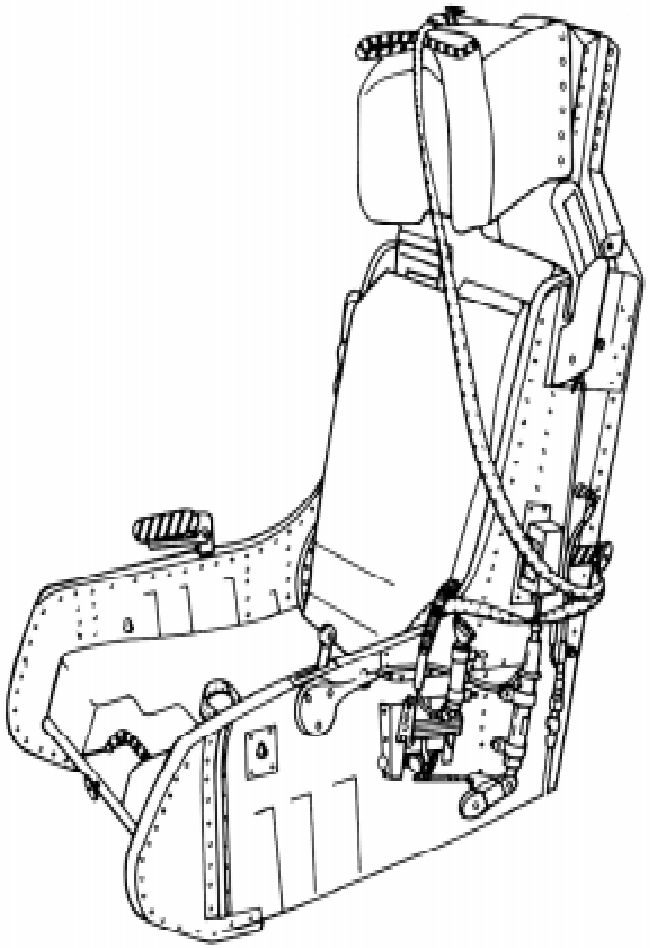

EJECTION SEAT SAFETYING

1. EJECTION SEAT SAFETYING-NORMAL AND EMERGENCY-NORTH AMERICAN LS-1A SEAT

NOTE:

Immediately upon gaining access to the aircraft cockpit, time permits and no hazardous conditions exist, proceed with seat safetying procedures.

a. Insert face curtain safety pin.

b. Insert lower ejection handle safety pin.

c. Insert striker bellcrank safety pin.

d. If safety pins are not available, break shear wires and disconnect seat initiator quick disconnects by pulling down on lower end of quick disconnect (on both sides of seat).

WARNING

In multi-seat aircraft, all ejection seats must be safetied due to command ejection possibility.

WARNING

When removing personnel from ejection seats, do not allow crewmembers or rescue personnel to become entangled in lower seat ejection handle or use face curtain handle as a support or hand hold.

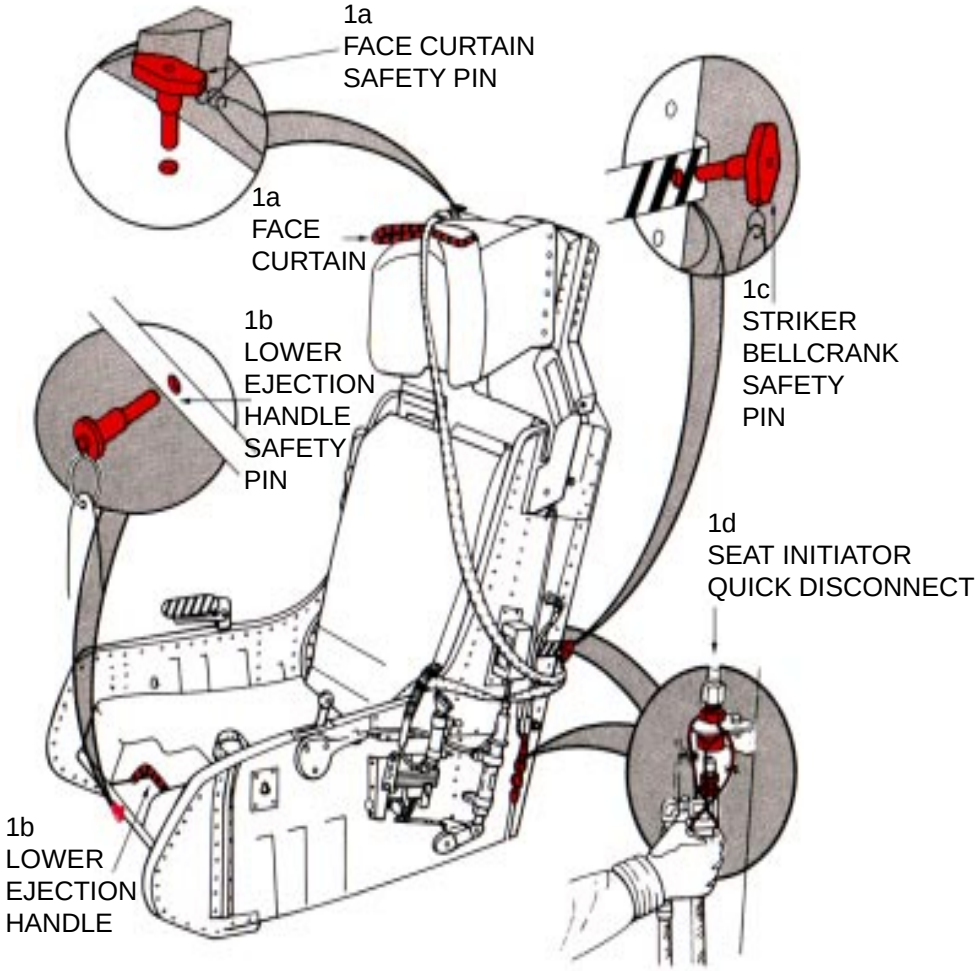

AIRCREW EXTRACTION

1. AIRCREW EXTRACTION

NOTE:
The crewmembers are attached to the seats by the use of integrated harness. Additionally, the oxygen/communication lead is attached to the survival kit. If crewmembers are wearing anti-G suits, a hose will be attached to the left side of the seat.

a. Remove oxygen mask by pulling down on release tabs on either side of helmet mask.

b. To disconnect oxygen/communication lead, pull up round collar and pull apart connection.

c. Grasp the anti-G suit hose and pull up from left seat fitting.

d. Release two lap belt, then two shoulder harness koch fittings.

e. Actuating the emergency harness release handle will free the crewmember from seat. However, the parachute and survival kit will remain attached to the crewmember. These items will have to be manually detached prior to extraction.

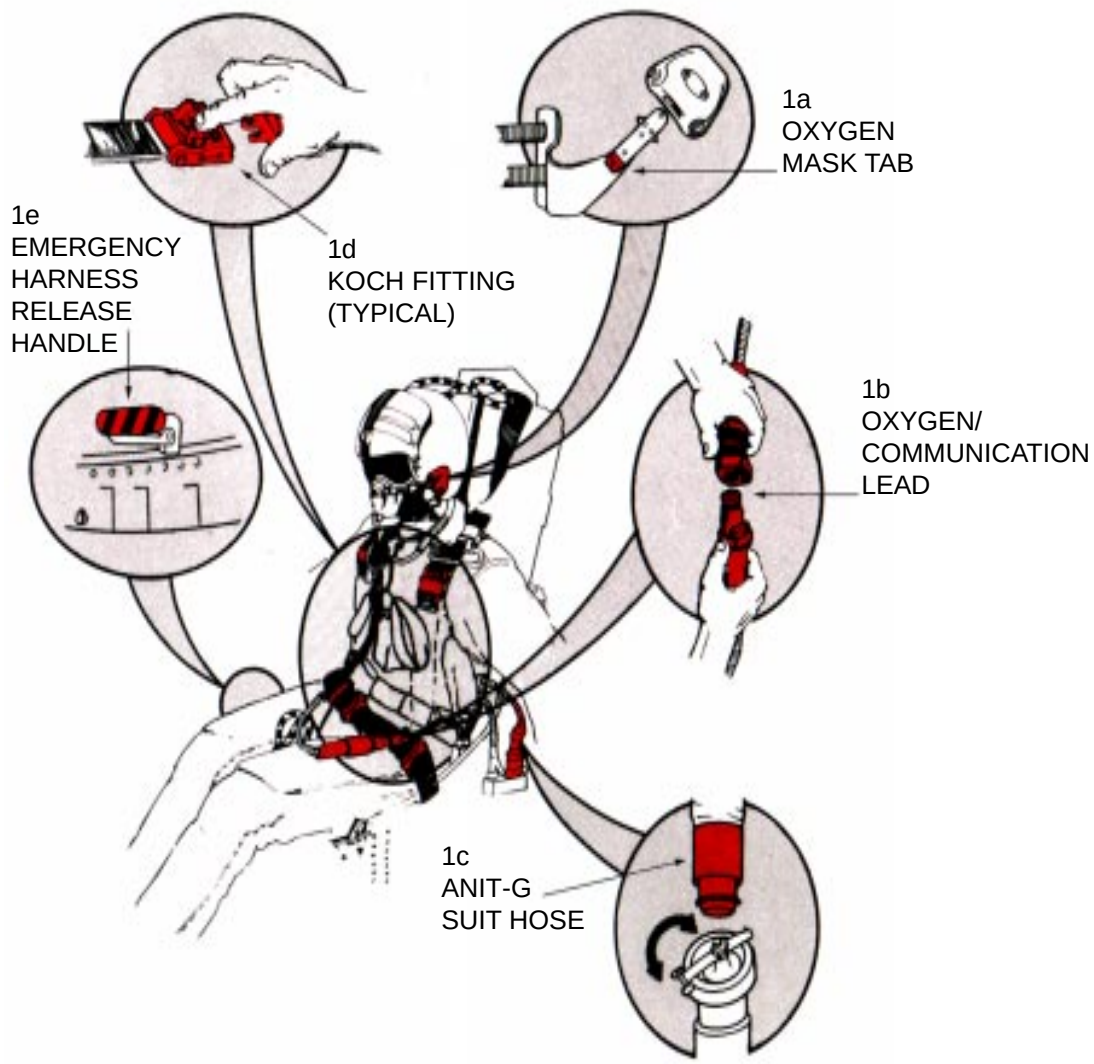

AIRCRAFT DIMENSIONS

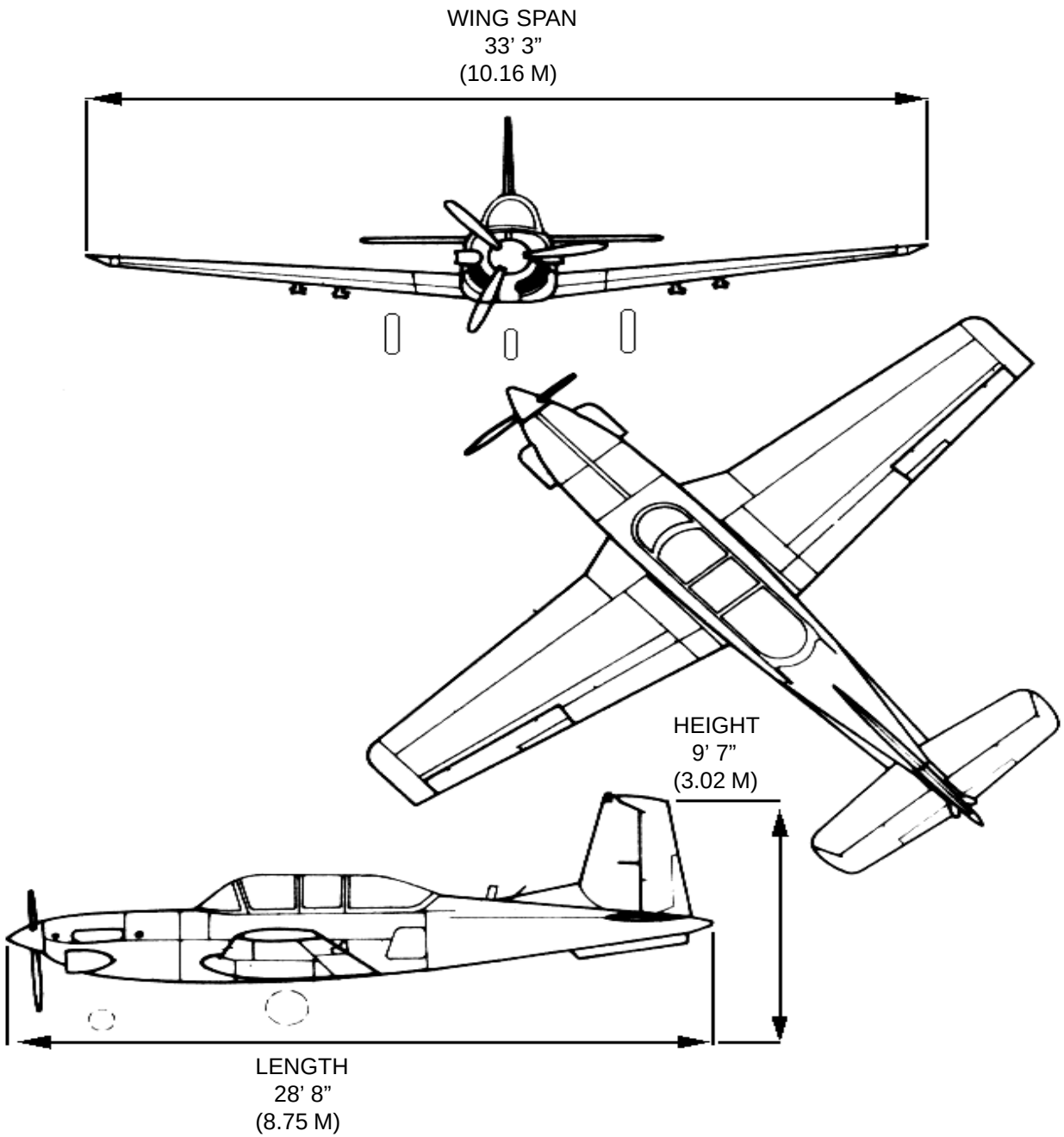

AIRCRAFT HAZARDS

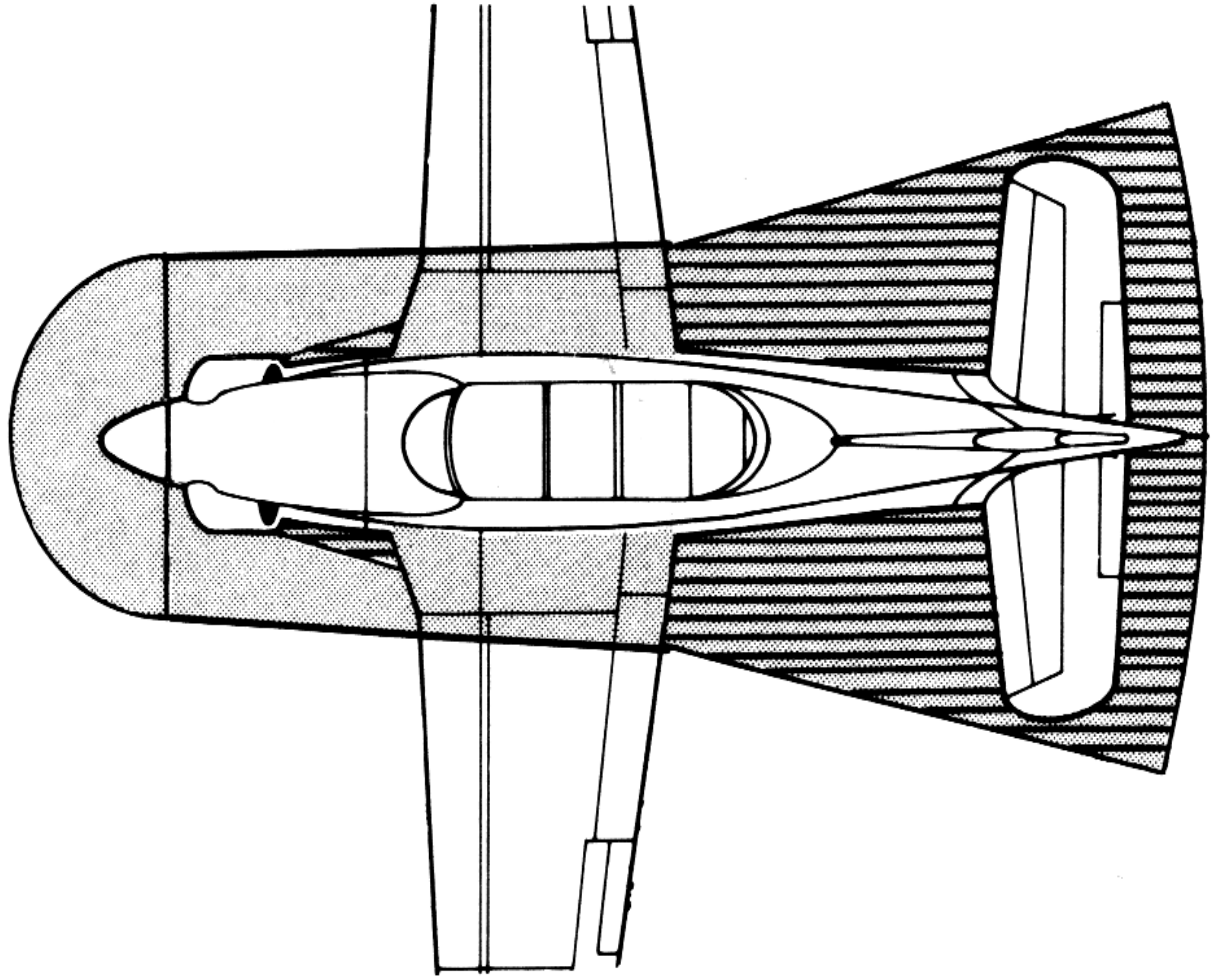

AIRFRAME MATERIALS

LEGEND

ALUMINUM

STEEL

OTHER
FIBERGLASS/MAGNESIUM

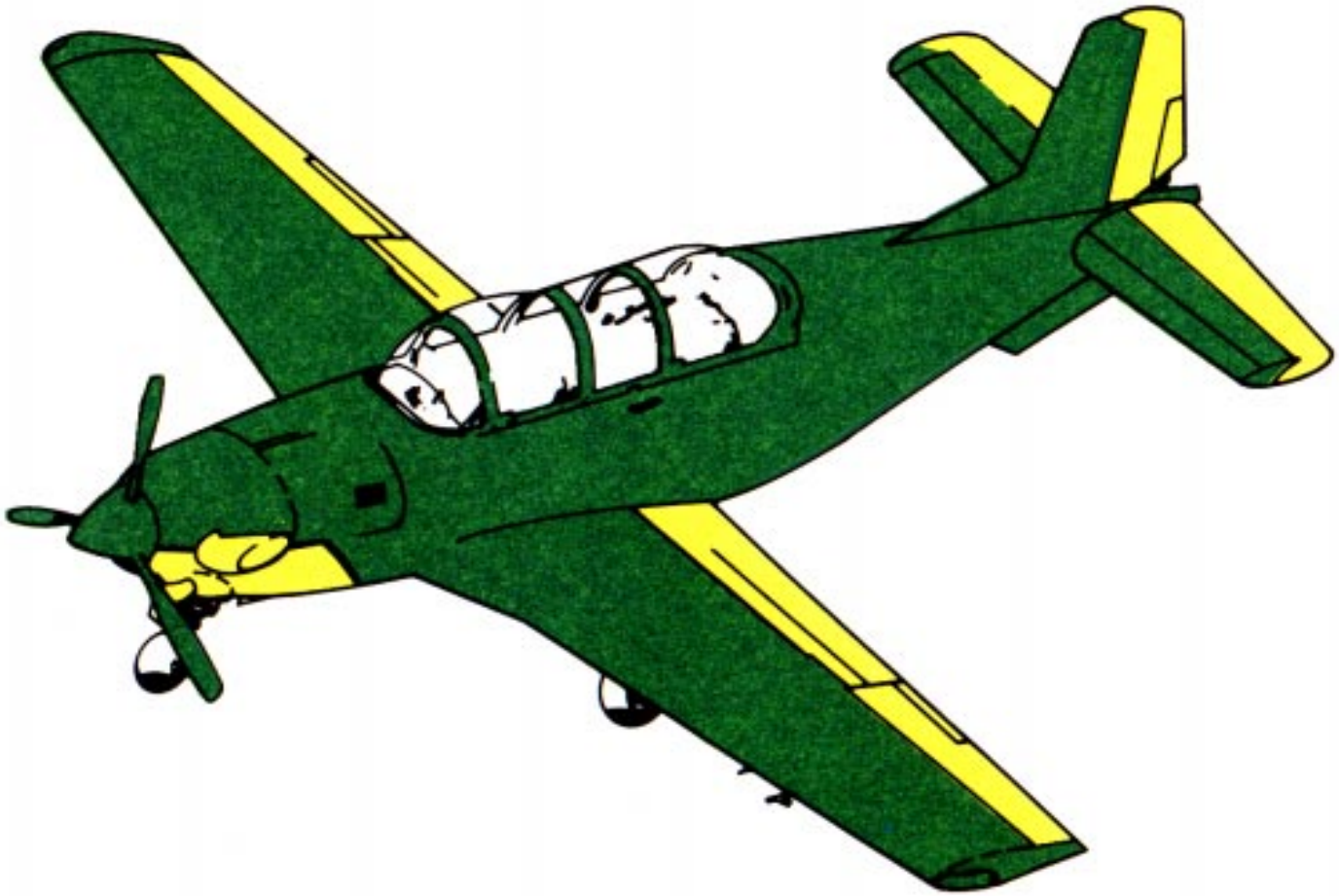

SPECIAL TOOLS/EQUIPMENT
Power Rescue Saw
Crash Ax

AIRCRAFT ENTRY

1. NORMAL ENTRY

a. Rotate canopy release handles, located on the left side of fuselage, clockwise.

b. Pull canopy sections aft with handles.

2. EMERGENCY ENTRY

a. Pull emergency canopy release handle, located on right forward fuselage marked with yellow rescue arrow, to release both sets of canopy rails from fuselage.

b. Remove canopies.

3. CUT-IN/FORCED ENTRY

a. Canopies are made of acrylic plastic. Cut around all four sides of canopy frames with power rescue saw or crash ax.

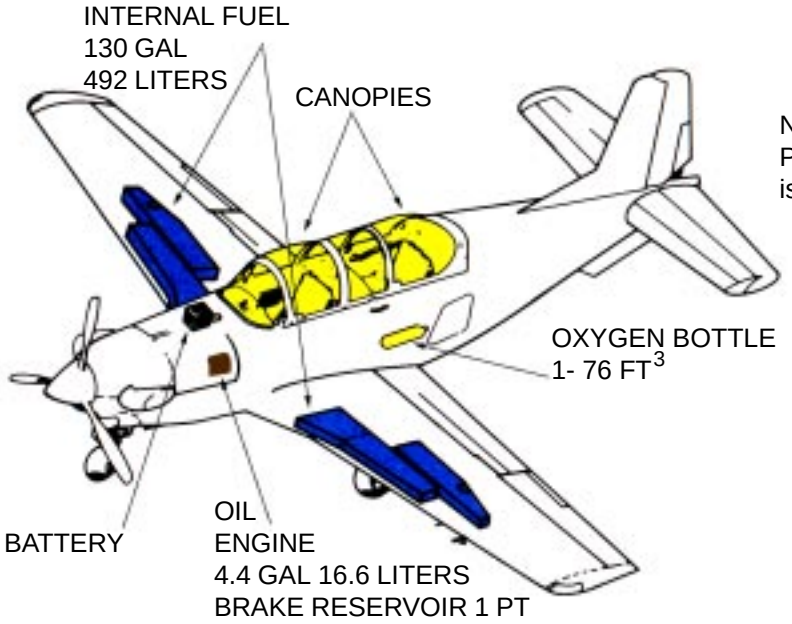

NOTE:
Pneumatic system is 3000 PSI.

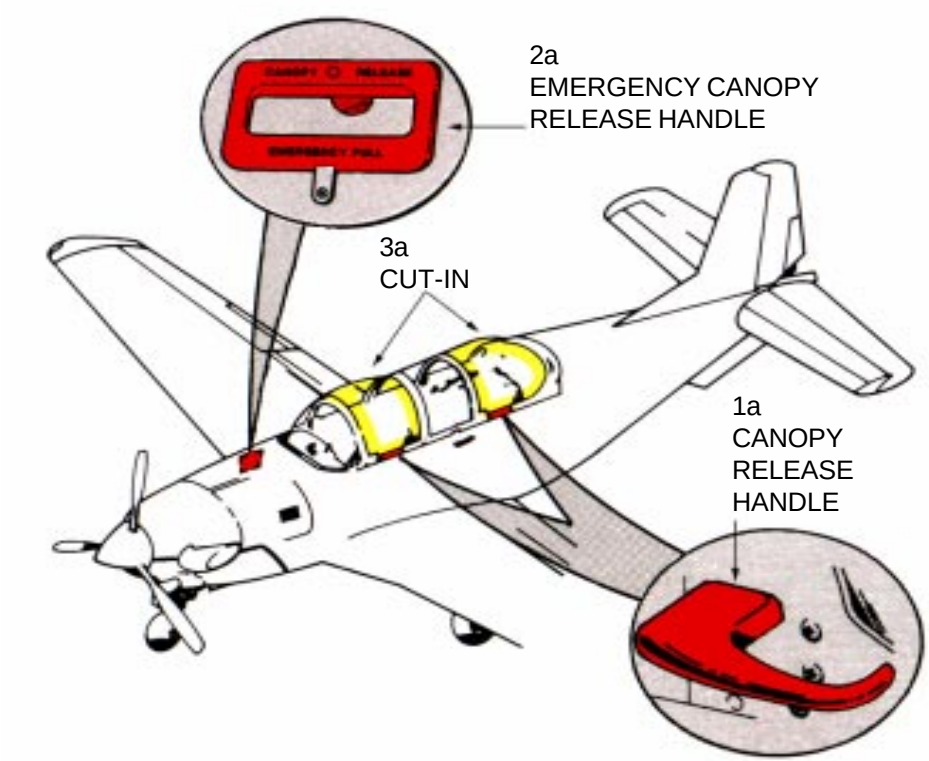

CANOPY SAFETY, ENGINE SHUTDOWN, AND BATTERY DISCONNECT

1. CANOPY SAFETY

a. The interior emergency canopy handle presents no hazard to rescue personnel. Insure that a metal clip holds the handle securely in place to prevent jettison.

2. ENGINE SHUTDOWN

a. Pull condition lever aft to OFF position.

b. Raise guard, pull up on emergency fuel shutoff handle.

c. Place battery switch in the OFF position.

3. BATTERY DISCONNECT

a. The battery is accessible through an access door on the right fuselage just forward of the canopy. The battery is equipped with a quick disconnect fitting. Disconnect, time permitting, if danger is imminent and cockpit switch is inaccessible.

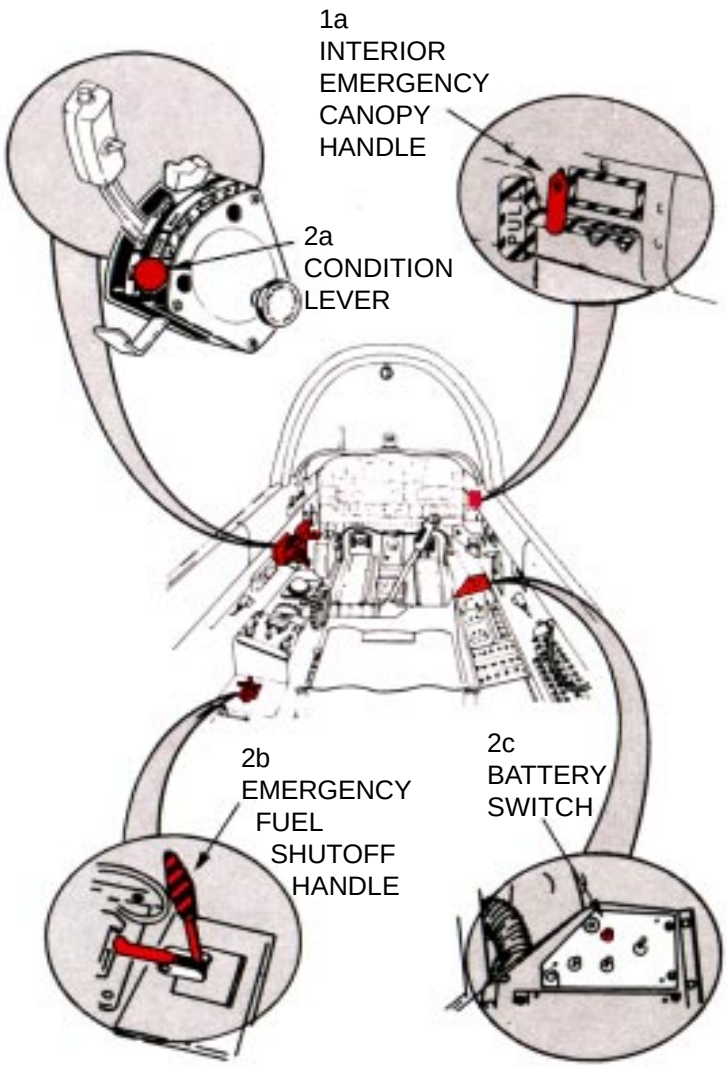

AIRCREW EXTRACTION

1. AIRCREW EXTRACTION

NOTE:
Pilot seats are equipped with shoulder harness, lap belts, and crotch straps utilizing a single five point quick disconnect buckle. Communication leads and oxygen hoses aare attached to the righ hand console and have quick disconnects. Crewmembers wear NB-6 backpack parachutes which have static lines attached to the left side of the seats with red spring clips.

a. Remove oxygen mask by pulling down on bayonet fittings on both sides of helmet mask.

b. Disconnect communication leads by pulling apart quick disconnect attached to left shoulder strap.

NOTE:
Position oxygen mask hose assembly to the right hand console to permit unobstructed path for extraction of crewmember.

c. Rotate single point buckle in either direction to release shoulder harness, lap belt, and crotch strap.

d. Pull out on three parachute ejector snap release levers, one on each leg and one on chest.

e. If parachute cannot be released, crewmember may be removed from aircraft with parachute attached. Release static line spring clip from left side of seat before removing crewmember.

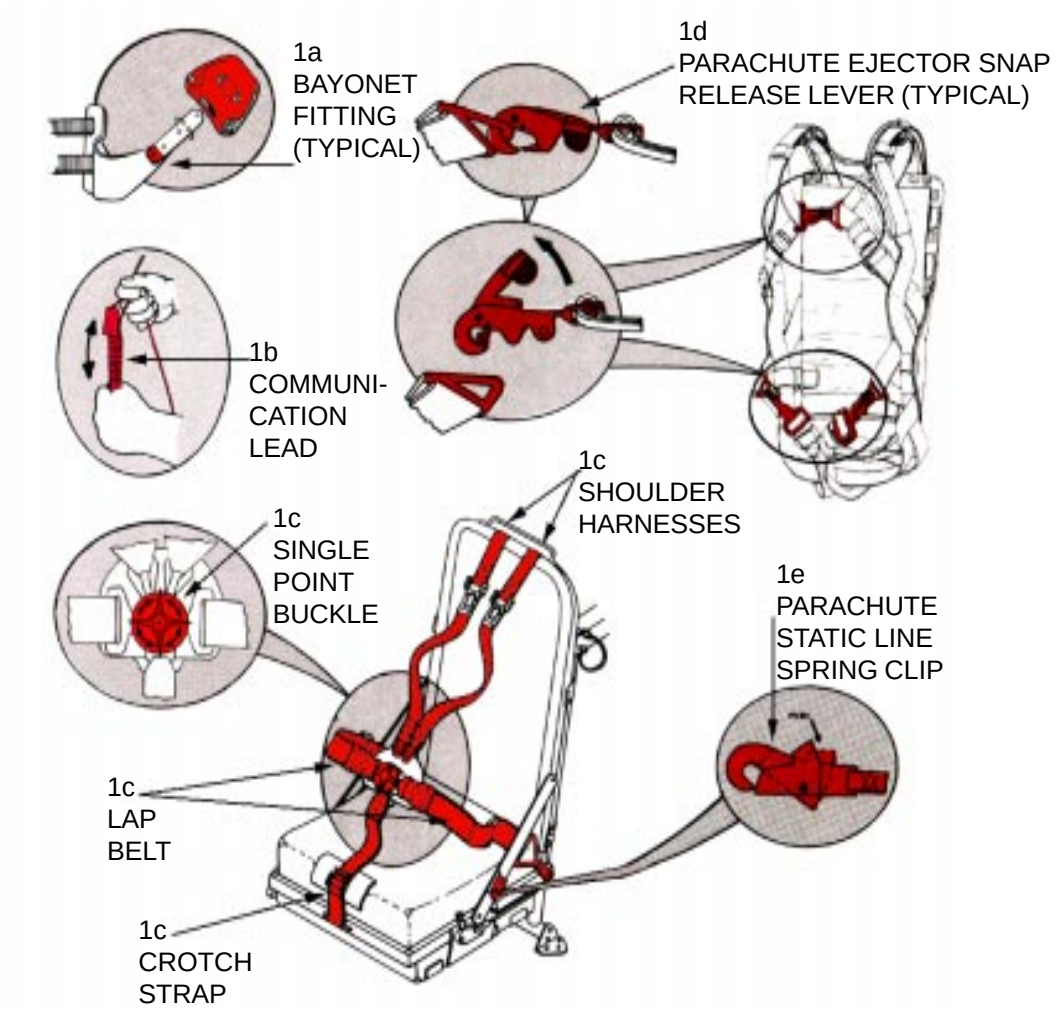

AIRCRAFT HAZARDS

NOTE:

The US Navy T-39 is the similar to the USAF T-39. Refer to Chapter 11, pages T-39.1 thru T-39.2. For additional information refer to the USAF T-39B and NT-39 on pages T-39.3 thru T-39.4.

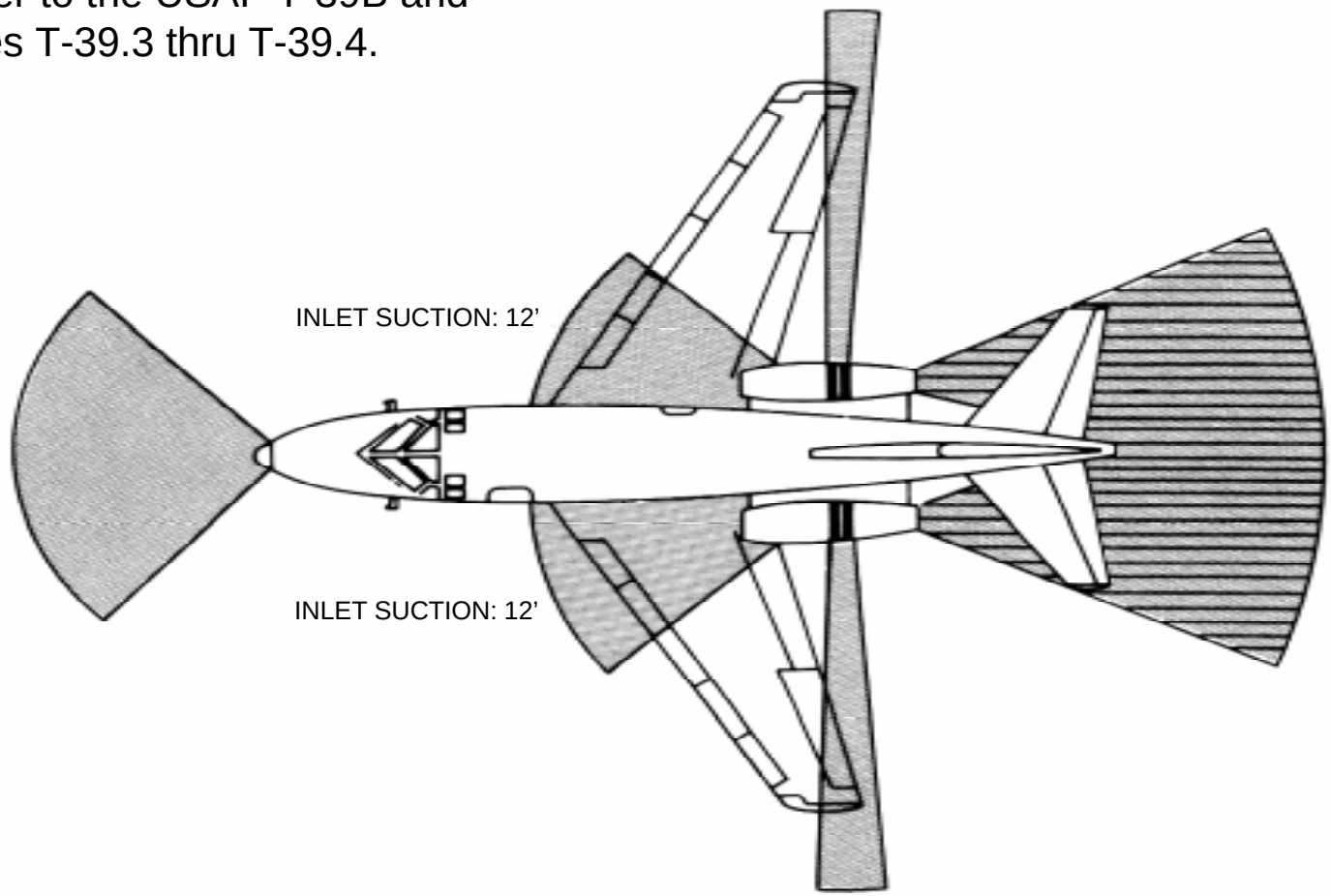

AIRFRAME MATERIALS

LEGEND

ALUMINUM

STEEL

OTHER
FIBERGLASS/MAGNESIUM

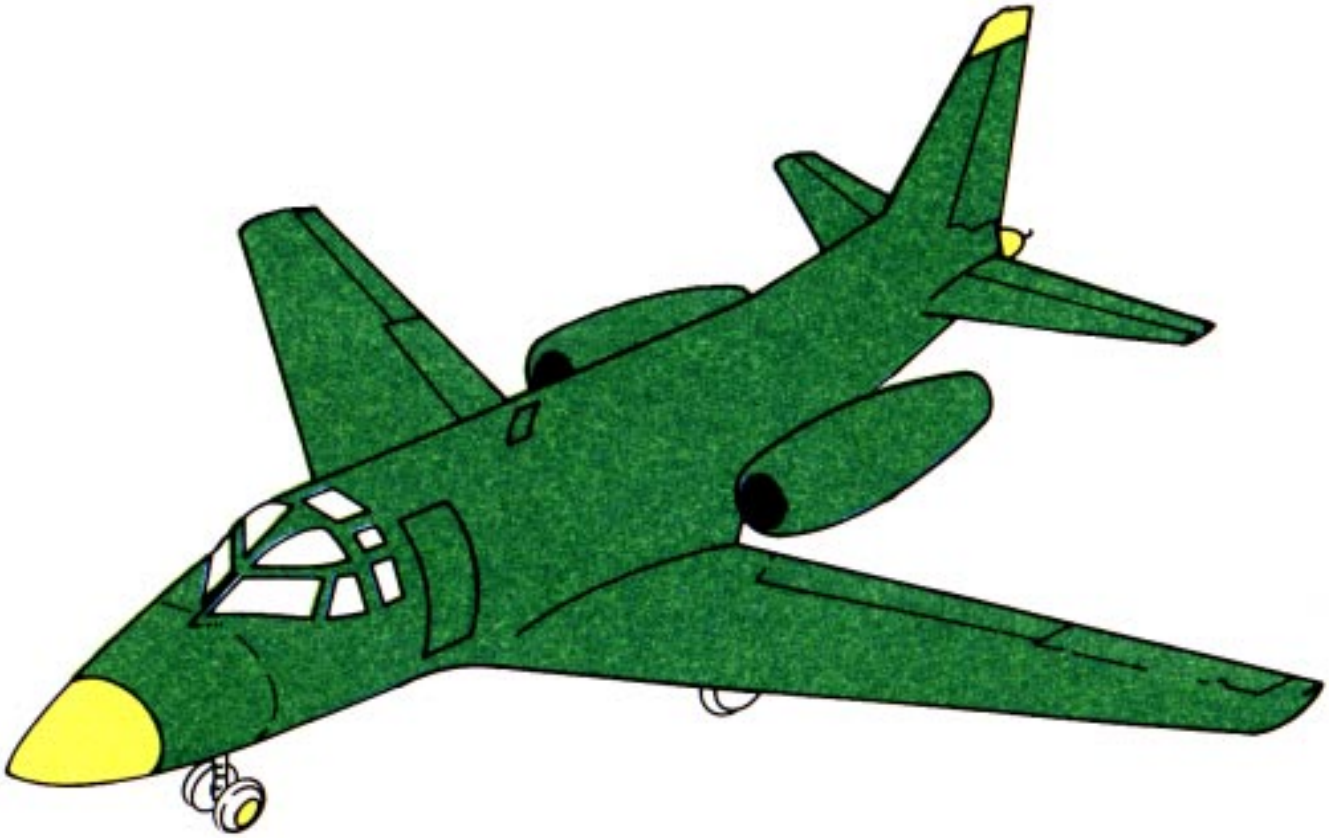

SPECIAL TOOLS/EQUIPMENT
Power Rescue Saw
Crash Ax

NOTE:
Pneumatic system is 3000 PSI.

AIRCRAFT ENTRY

1. NORMAL ENTRY

a. Turn rotary latch, located forward left side of fuselage, one quarter turn counterclockwise to unlock main entrance door. Apply even pressure on lower section of door. Door will move inward several inches and then top of door will rotate outward and start a downward swing. When door starts downward movement, support door and lower to extended position.

2. EMERGENCY ENTRY

a. If the main entrance doorway is inaccessible, enter through the ground escape hatch located on right side of fuselage just forward of the engine intake.

WARNING

This entrance lies within the danger area for the engine intake suction area.

b. Push release button, located right side of fuselage over wing.

c. Pull handle to unlock escape hatch.

d. Push escape hatch in to gain entry.

3. CUT-IN/FORCED ENTRY

a. If the door or escape hatch are inaccessible, the chopping or cutting area that would offer the least resistance is the area immediately aft of the main entrance doorway. This area may or may not be marked on the aircraft.

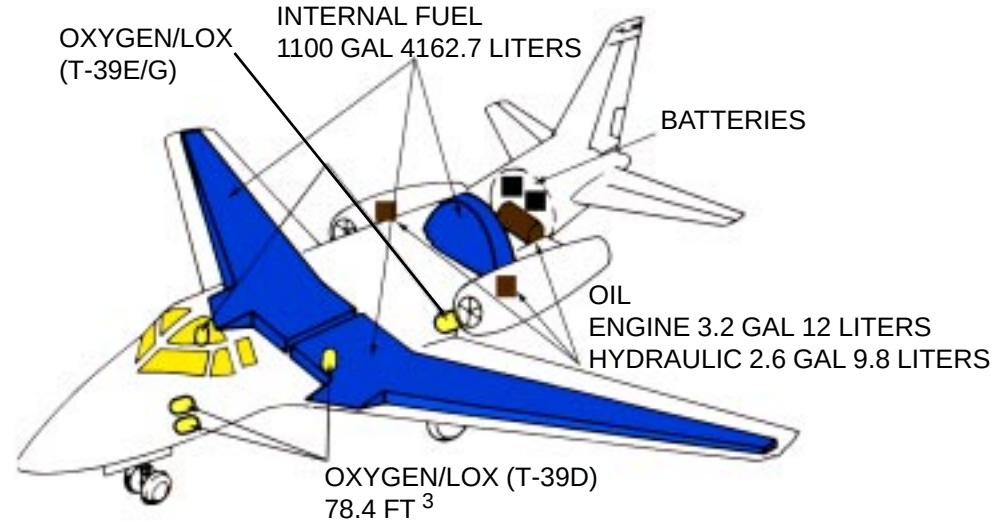

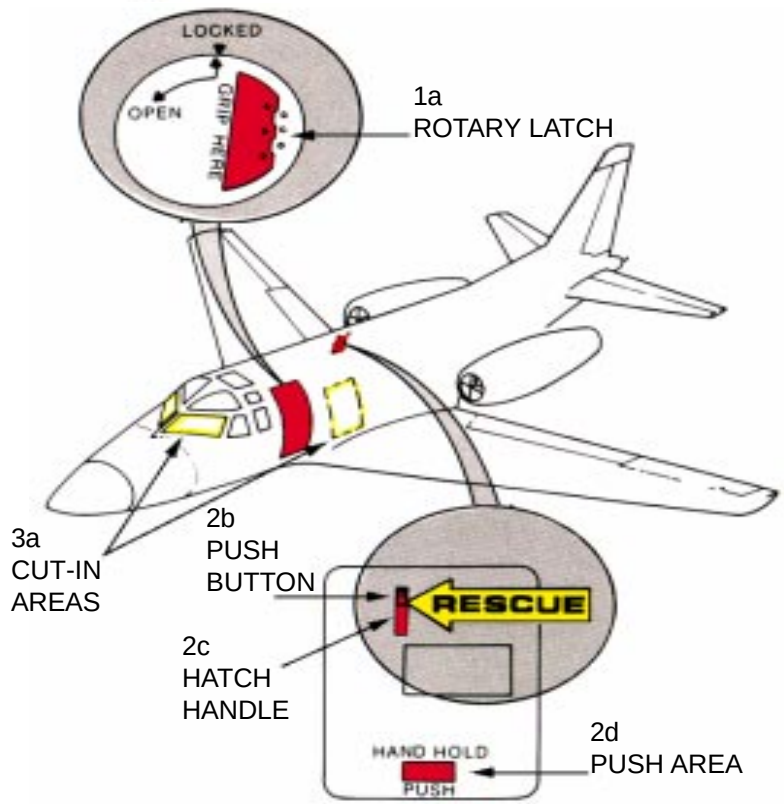

EMERGENCY ESCAPE HATCH

ENGINE SHUTDOWN AND BATTERY ACCESS

1. ENGINE SHUTDOWN

a. Depress throttle safety latches and retard throttles, located on center console, to CLOSE position.

b. Place engine master switches, located on center console forward of throttles, in OFF position (positive lock type).

c. Place electrical master switch, located on overhead center instrument panel, in OFF position (positive lock type).

d. Place battery switch, located upper left corner of forward co-pilot's instrument panel, in OFF position.

2. BATTERY ACCESS

a. Two batteries are located in the aft fuselage compartment and are accessible through the aft compartment access door. This door will be inaccessible if the aircraft is on its belly.

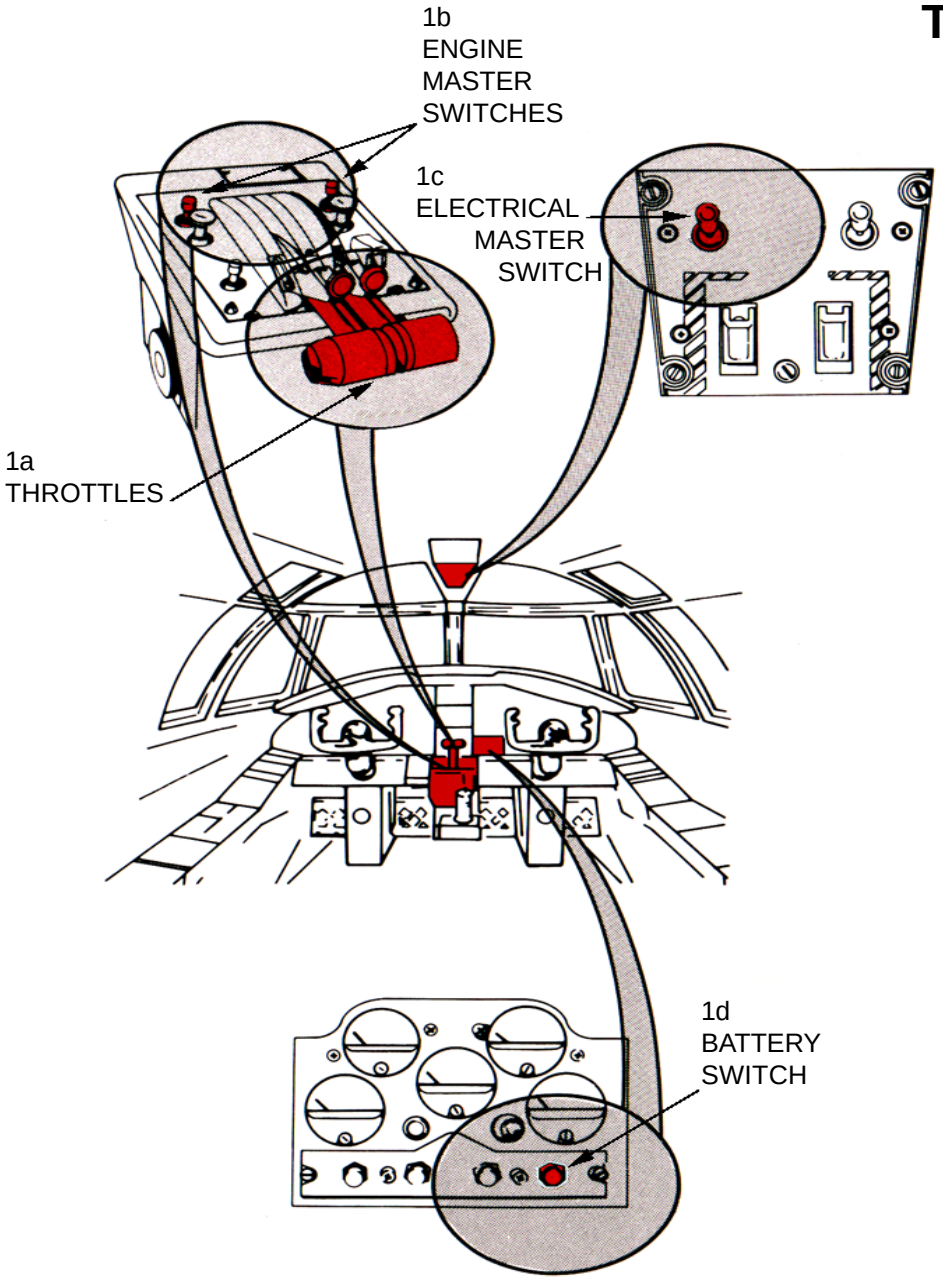

AIRCREW EXTRACTION

1. AIRCREW EXTRACTION

NOTE:
The pilot and co-pilot are attached to the seats by shoulder harnesses and lap belts. Passengers and other crewmen have lap belts only.

a. Lift quick disconnect lever to release shoulder harnesses and lap belt for the pilot and co-pilot.

b. Lift buckle cover to release lap belt (airline type) for passengers and other crewmen.

c. Seat adjustments are located on seat for positioning the seat for easy access and ease of extraction, if needed.

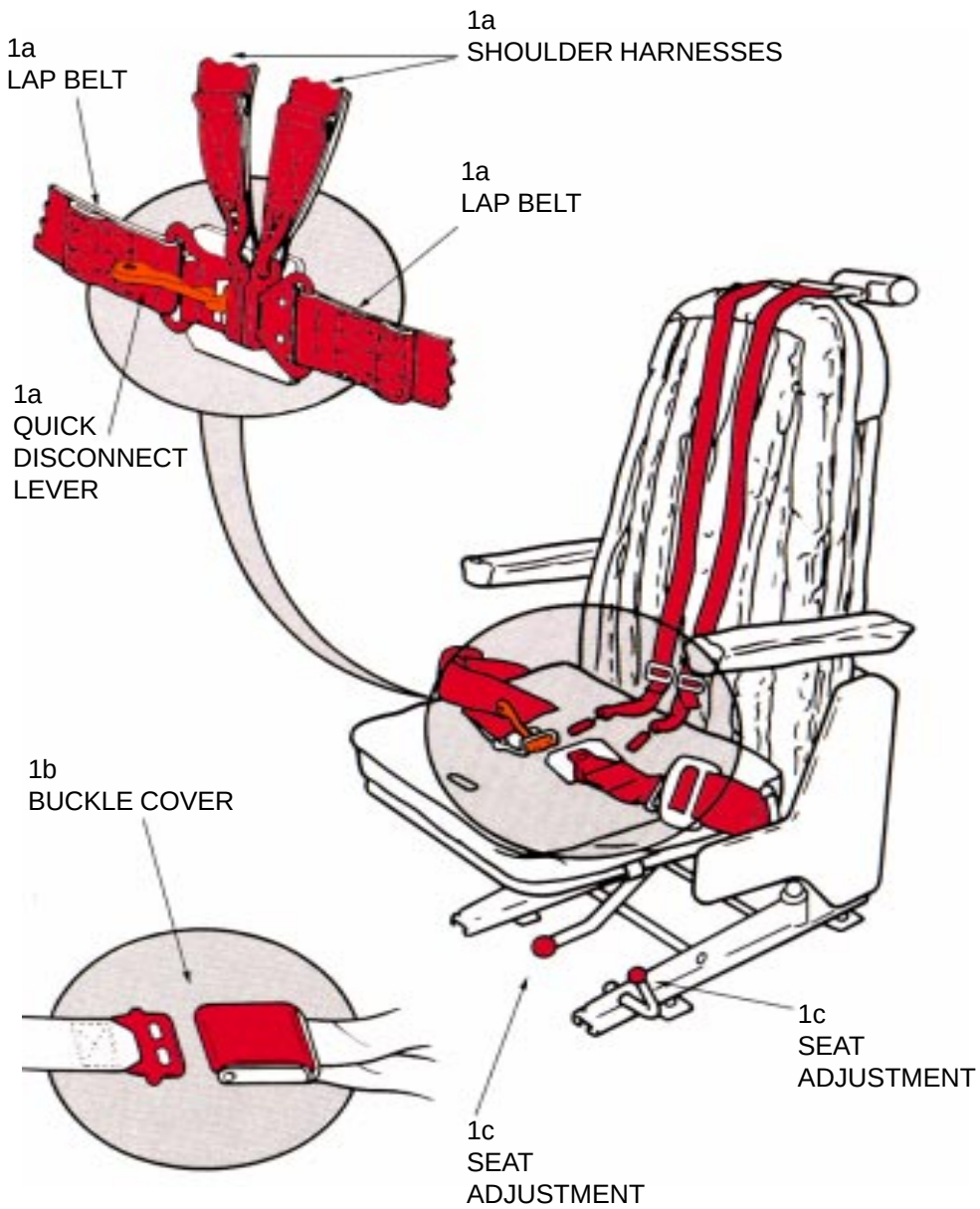

PILOT\CO-PILOT SEAT

AIRCRAFT DIMENSIONS

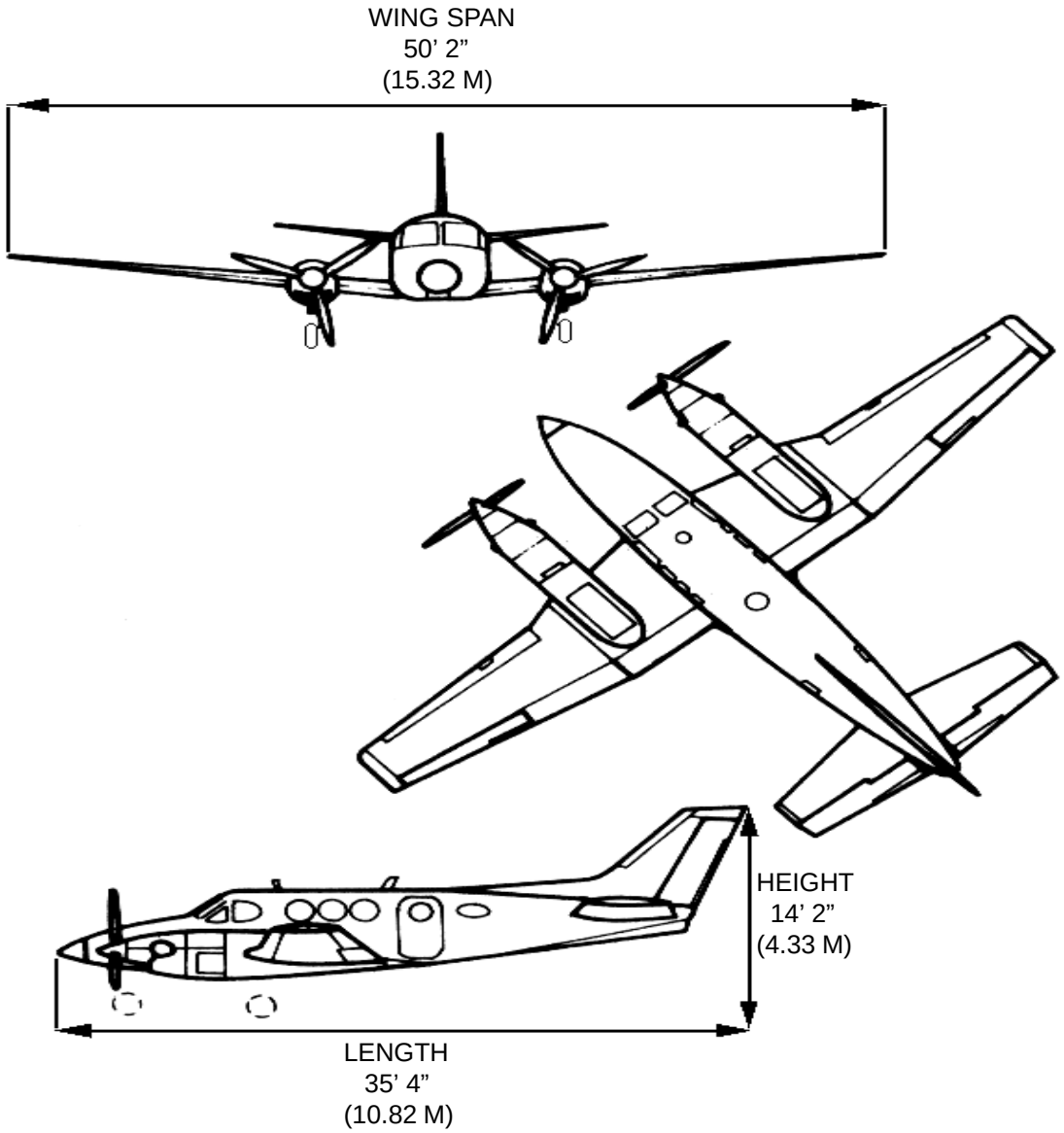

AIRCRAFT HAZARDS

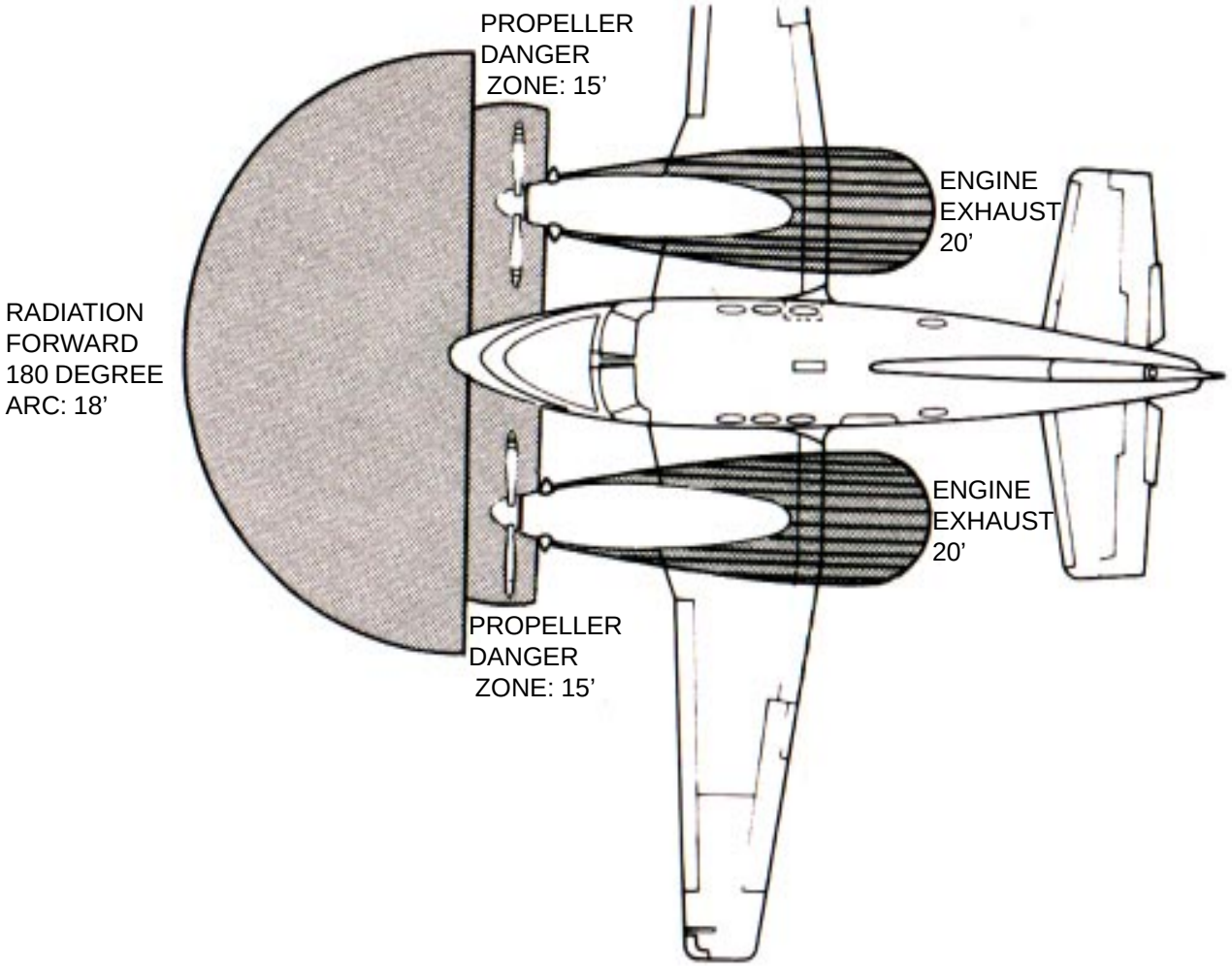

AIRFRAME MATERIALS

LEGEND

ALUMINUM

STEEL

OTHER
FIBERGLASS

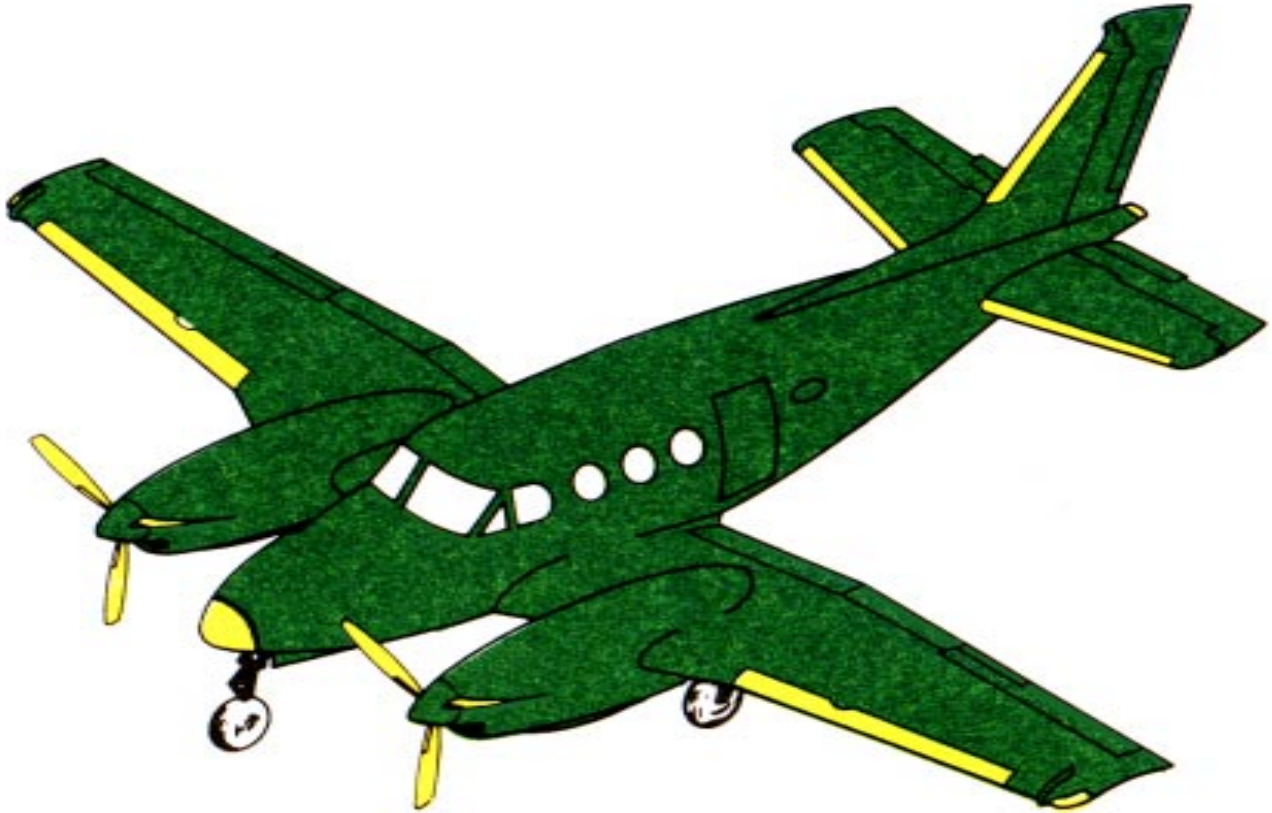

SPECIAL TOOLS/EQUIPMENT
Power Rescue Saw
Crash Ax

AIRCRAFT ENTRY

1. NORMAL ENTRY

a. Normal entry is through the cabin door located aft of the wing on the left side of the fuselage.

b. Press button behind the cabin door handle.

c. Rotate the cabin door handle clockwise to open.

2. EMERGENCY ENTRY/FORCED ENTRY

a. The emergency exit hatch is located on right side of fuselage.

b. Using crash ax, break window and reach through window, remove inside cover over release handle.

c. Press push button below handle.

d. Pull handle inward and up to release hatch.

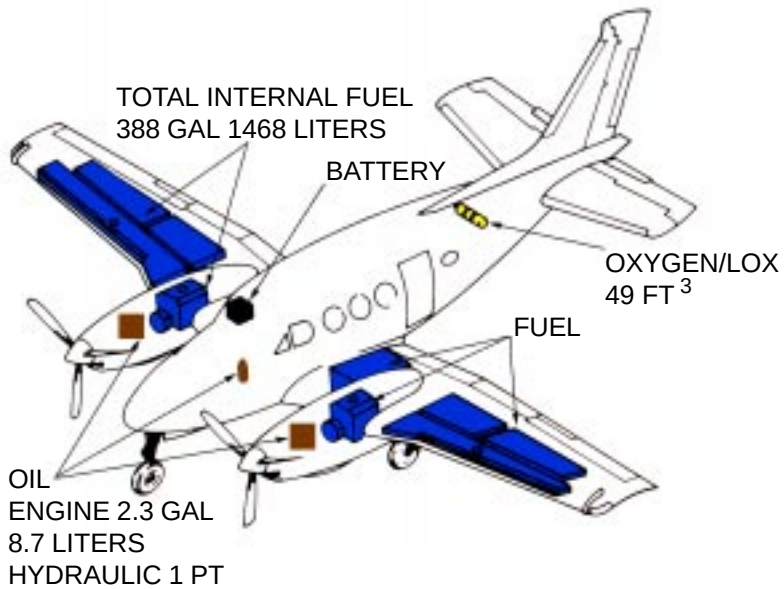

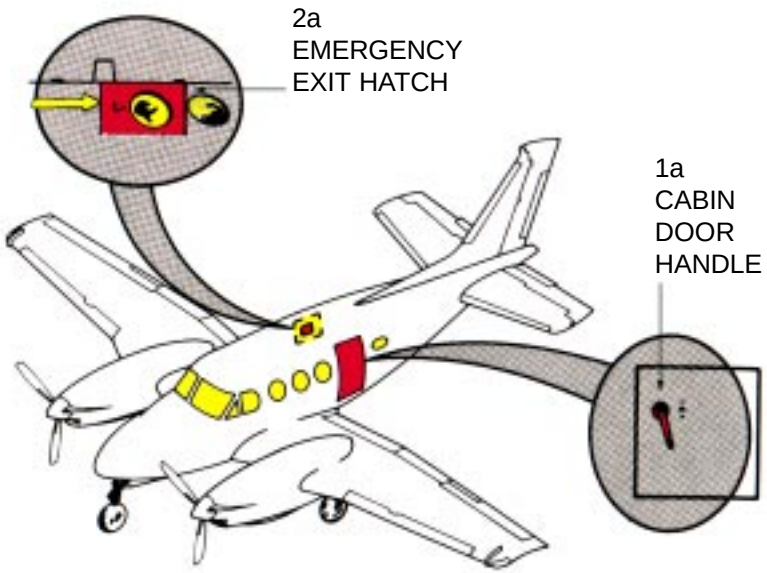

ENGINE SHUTDOWN AND BATTERY ACCESS

1. ENGINE SHUTDOWN

a. Move condition levers, located on center console, aft to CUT-OFF position.

b. Raise switch guards and move fuel valve switches, located on pilot's right console, down in CLOSED position.

c. Place battery switch, located on center console, in the OFF position by moving the master gang bar aft.

2. BATTERY ACCESS

a. The battery is located in the top of the right wing center section and equipped with a quick disconnect plug.

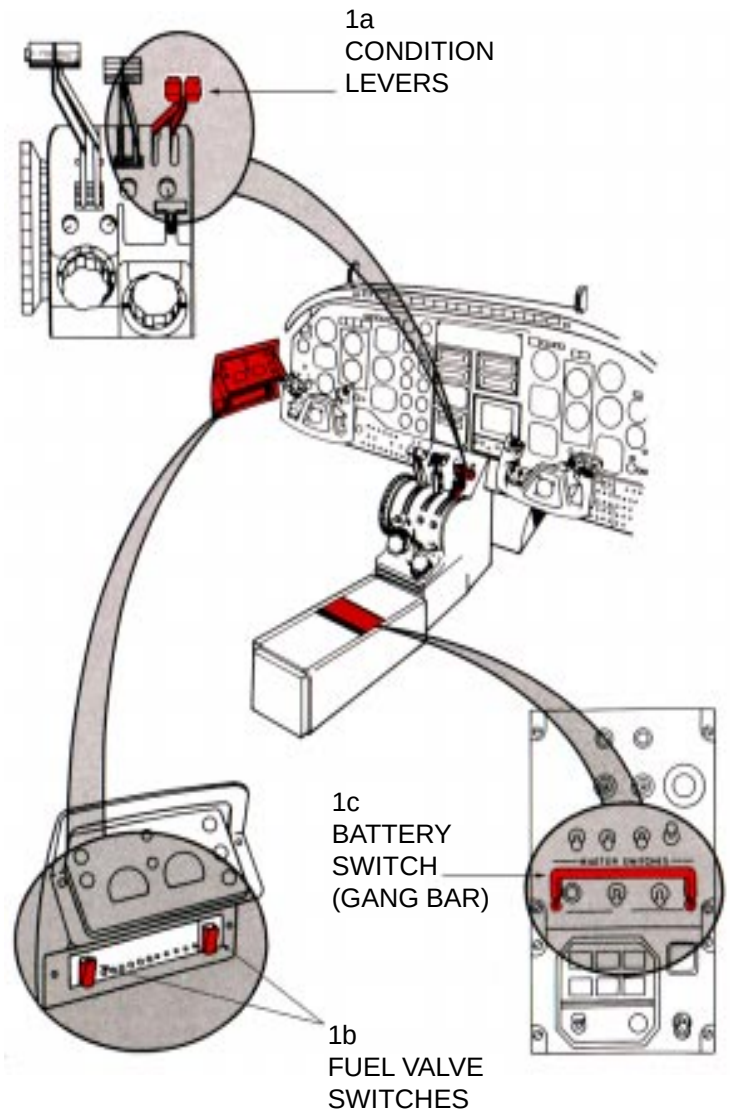

AIRCREW EXTRACTION

1. AIRCREW EXTRACTION

NOTE:
Pilot and co-pilot are attached to the seats by shoulder straps attached to the lap belt by a quick disconnect buckle. The passengers have lap belts only.

a. Lift buckle cover to release shoulder harness and lap belt for pilot and co-pilot.

b. Lift buckle cover to release lap belt for passengers.

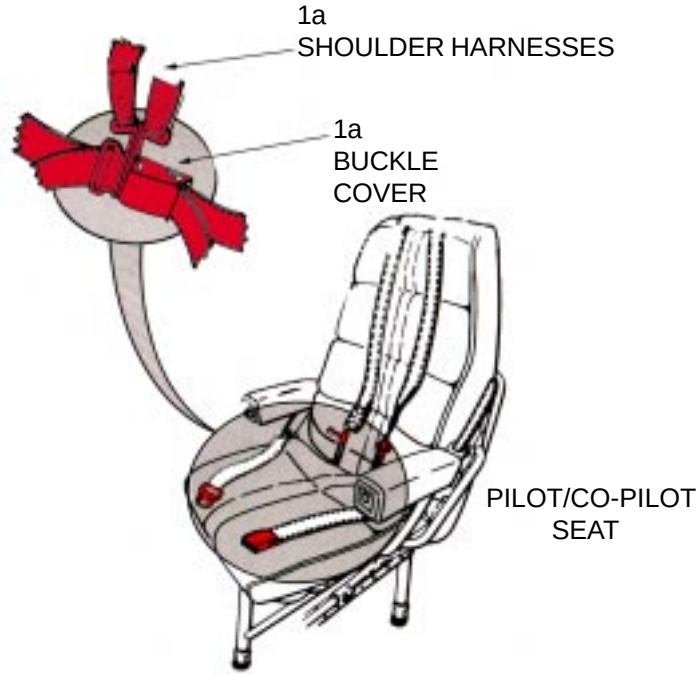

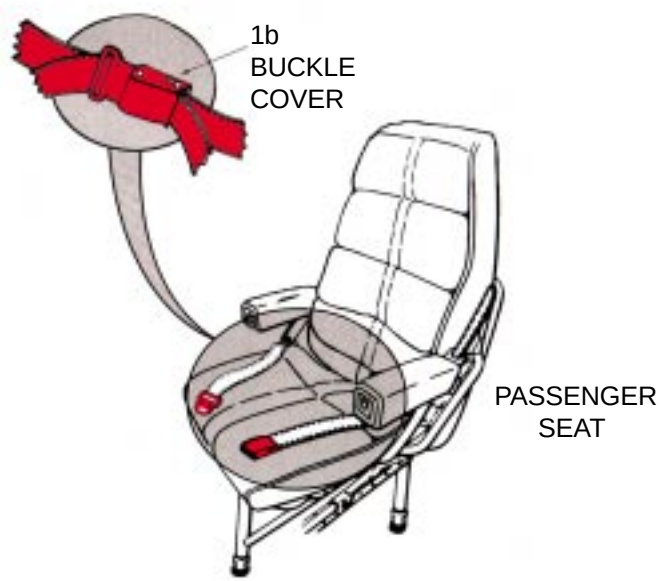

AIRCRAFT DIMENSIONS

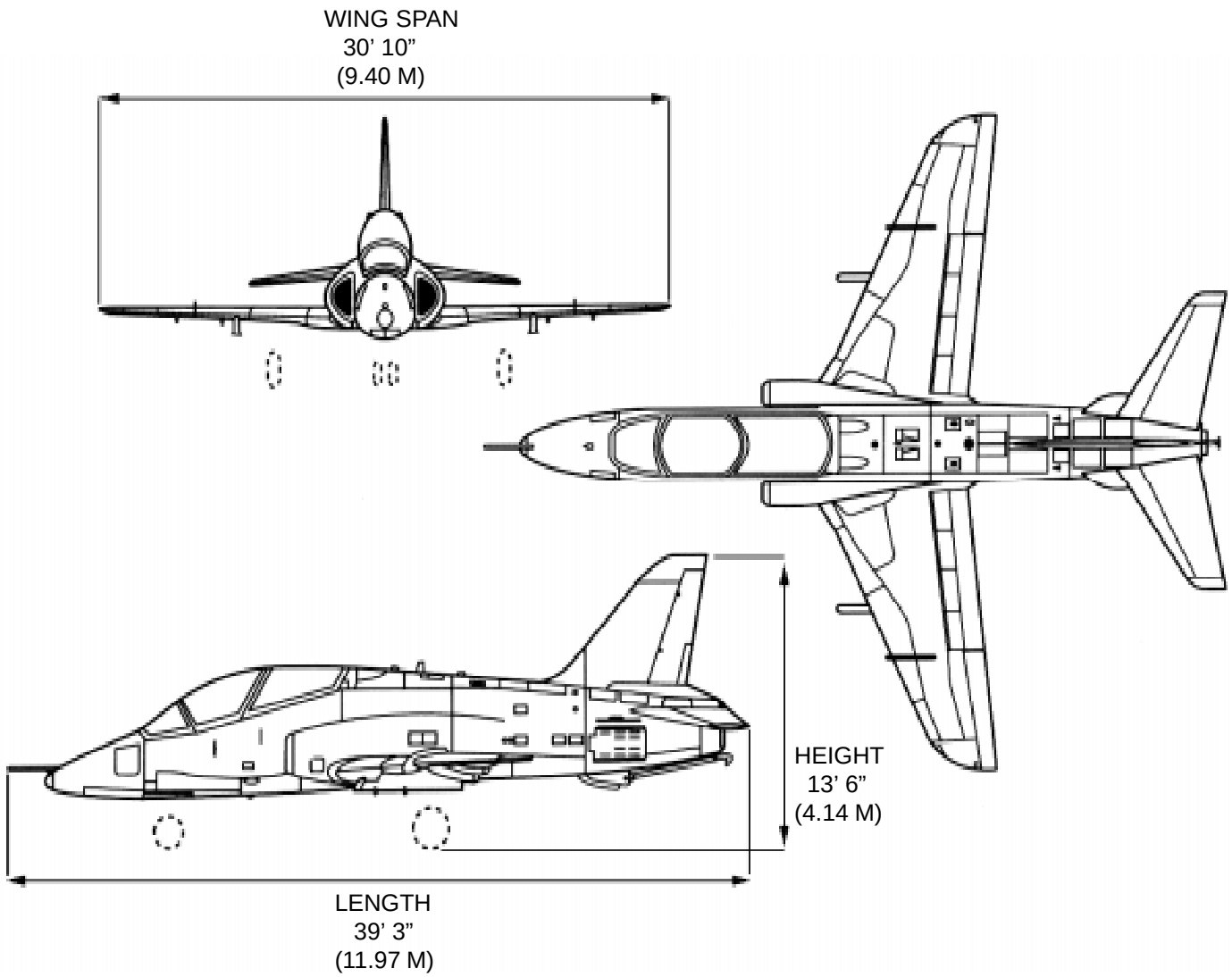

AIRCRAFT HAZARDS

WARNING

Remove all objects under the aircraft. Failure to do so can result in damage to the aircraft or injury to personnel.

WARNING

Stay clear of area within 100 feet directly behind the aircraft when the engine is operating at military thrust (MRT).

WARNING

Make certain that intake danger area is clear of debris. Jet blast zone varies according to prevailing wind.

ARMAMENT: Rockets, PRAC Bombs

PYROTECHNICS: Pylon Ejectors, Mild Detonating Cord

AIRCRAFT MATERIALS: Aluminum, Steel, Acrylic, Titanium, Fiberglass, Carbon Composites

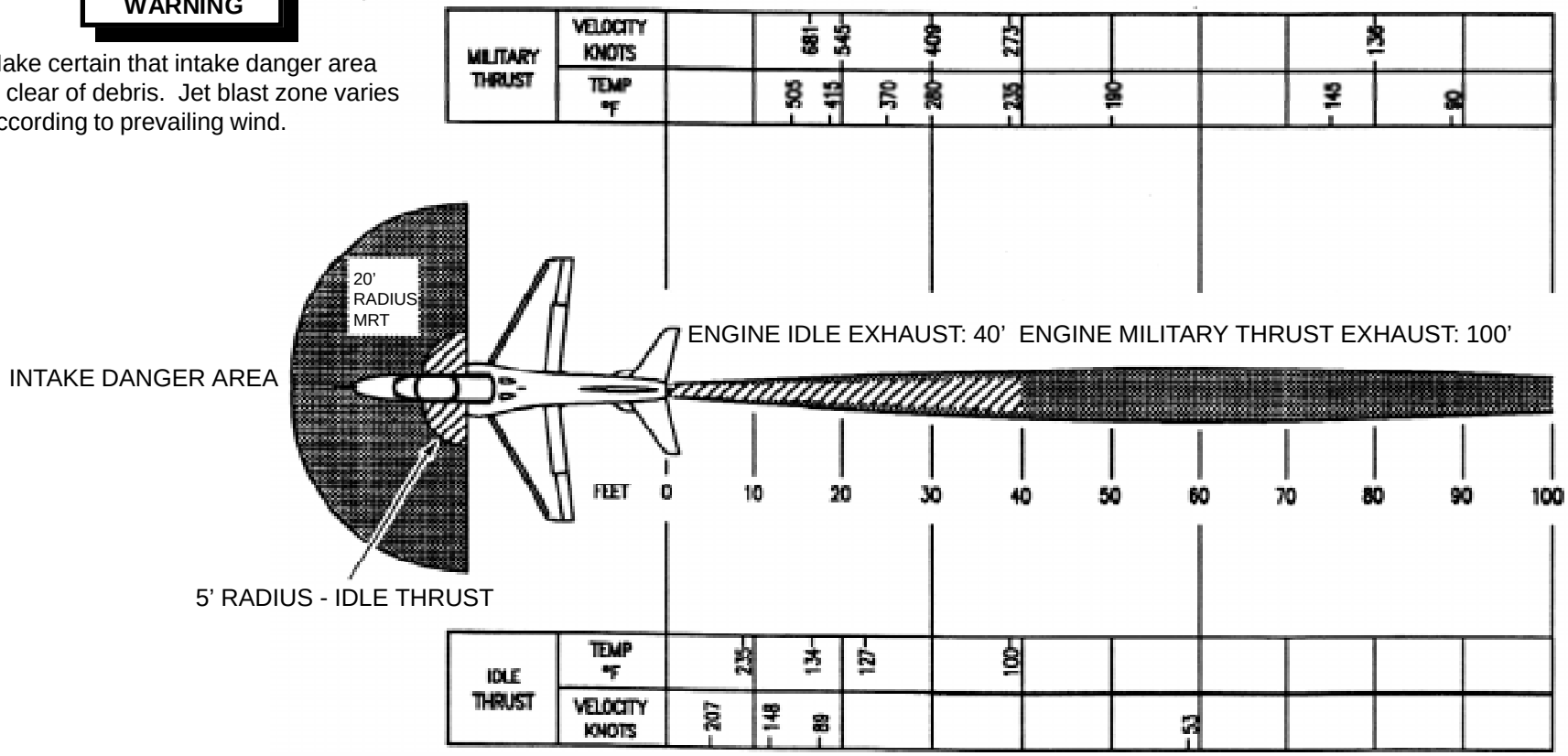

AIRCRAFT HAZARDS-Continued

NOTE:
T-45A uses a Onboard Oxygen Generating System (OBOGS).

CAUTION

- Do not apply fire extinguishing agent into engine exhaust tailpipe.
- Do not puncture fuel tanks, fire will spread when fuel is released.
- Do not stand in front of air intake ducts when applying fire extinguishing agent.

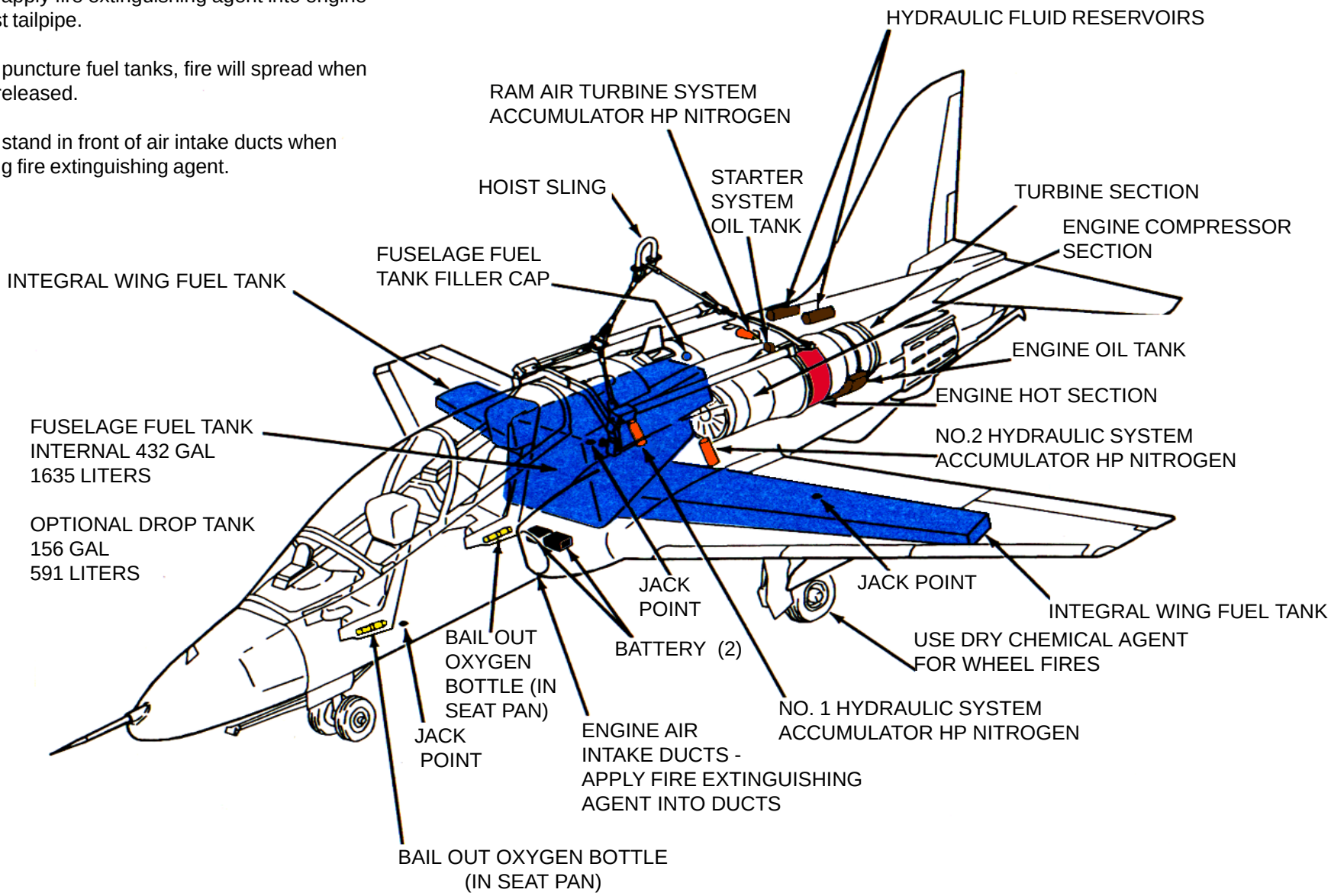

SPECIAL TOOLS/EQUIPMENT
Power Rescue Saw
Crash Ax

AIRCRAFT ENTRY

1. NORMAL ENTRY
a. Access to the cockpit in normal operations is gained by using the canopy external operating handle located on the left side of the fuselage.

2. MANUAL ENTRY
a. Depress canopy handle release, located on the external canopy handle, to release canopy handle.
b. Rotate canopy handle clockwise.
c. Release safety catch on internal canopy operating lever, located on left forward inside of cockpit, and pull to release canopy.

3. EMERGENCY ENTRY

NOTE:
The aircraft is not equipped with an external canopy jettison handle.

a. Access to the cockpit can be gained in emergency situations by manually opening the canopy using the external operating handle; however, if this proves impossible, the canopy can be shattered by the AIRCREW operation of the Mild Detonating Cords (MDC).

4. CUT-IN/FORCED ENTRY
a. Canopy is acrylic plastic and may be cut with power rescue saw or shattered by impact with the crash ax. All four sides will require cutting to remove canopy.

5. CANOPY SAFETY PROCEDURES
a. Gain access and safety the canopy MCD by depressing the canopy handle and release.
b. Rotate canopy handle clockwise.
c. Remove streamers and safety pins from right hand map case containers.
d. Install safety pins in the actuator to safety the internal canopy MDC firing handle in both cockpits.

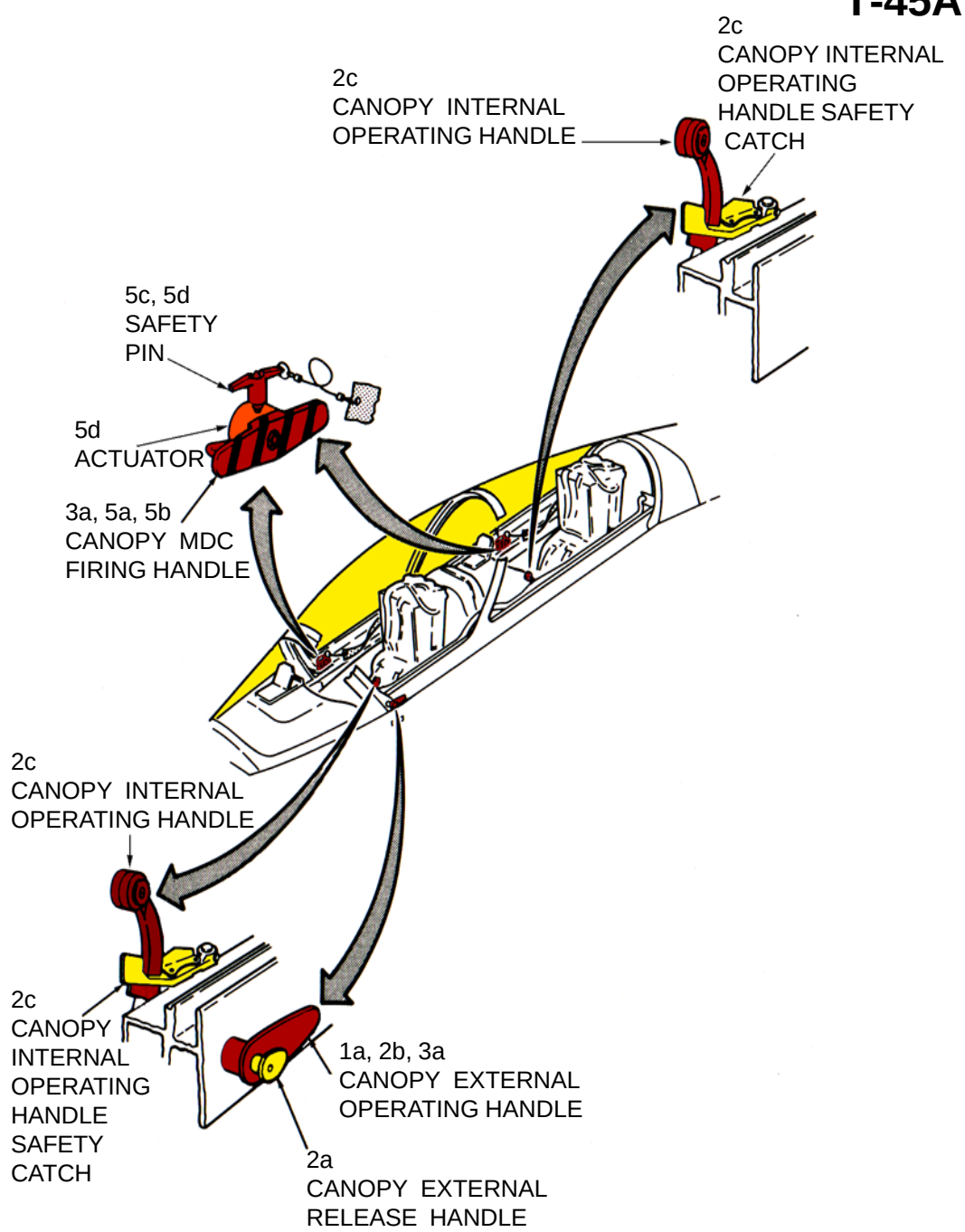

ENGINE SHUTDOWN

1. ENGINE SHUTDOWN

NOTE:
Procedures take place in forward cockpit.

a. Lift idle detent lock, located forward of throttle on left hand console.

b. Place throttle, located on left hand console, to OFF position.

c. Pull emergency fuel shutoff handle, located aft of throttle on left console.

d. Place battery switches No. 1 and No.2, located aft right hand console forward of map container, to OFF position.

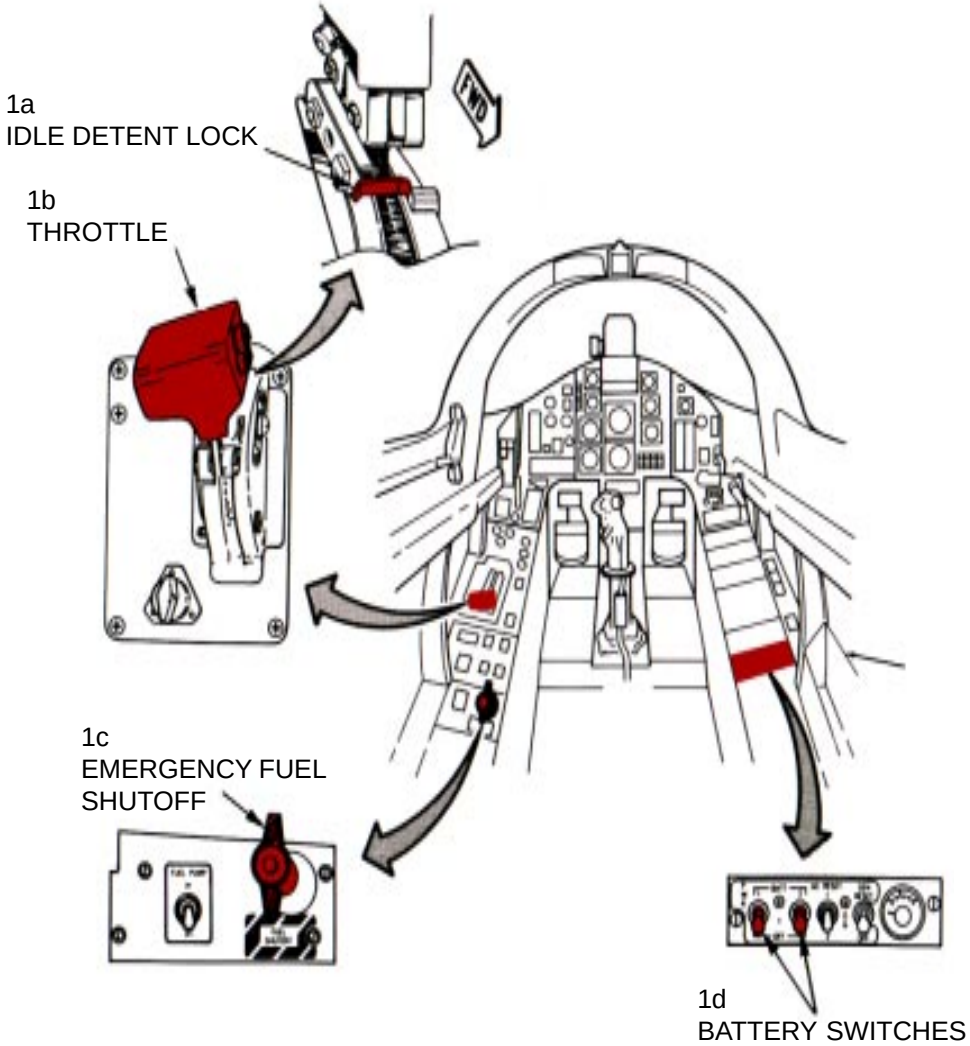

AIRCREW EXTRACTION

1. AIRCREW EXTRACTION

NOTE:
The T-45A uses the Martin-Baker 14 NACES ejection seat. Pilot and co-pilot are attached to the seat by shoulder straps and lap belt with quick disconnects.

a. Remove oxygen mask.

b. Remove streamer and safety pin from right hand map container and install in ejector control handle.

c. Depress thumb button on emergency restraint handle and pull handle UP.

d. Install safety pin in canopy MDC firing handle.

e. Disconnect pilot's communication/oxygen hose from seat pan.

f. Disconnect G-suit hose from aircraft console.

g. Support pilot, release four (4) quick disconnects or cut webbing and remove pilot from cockpit.

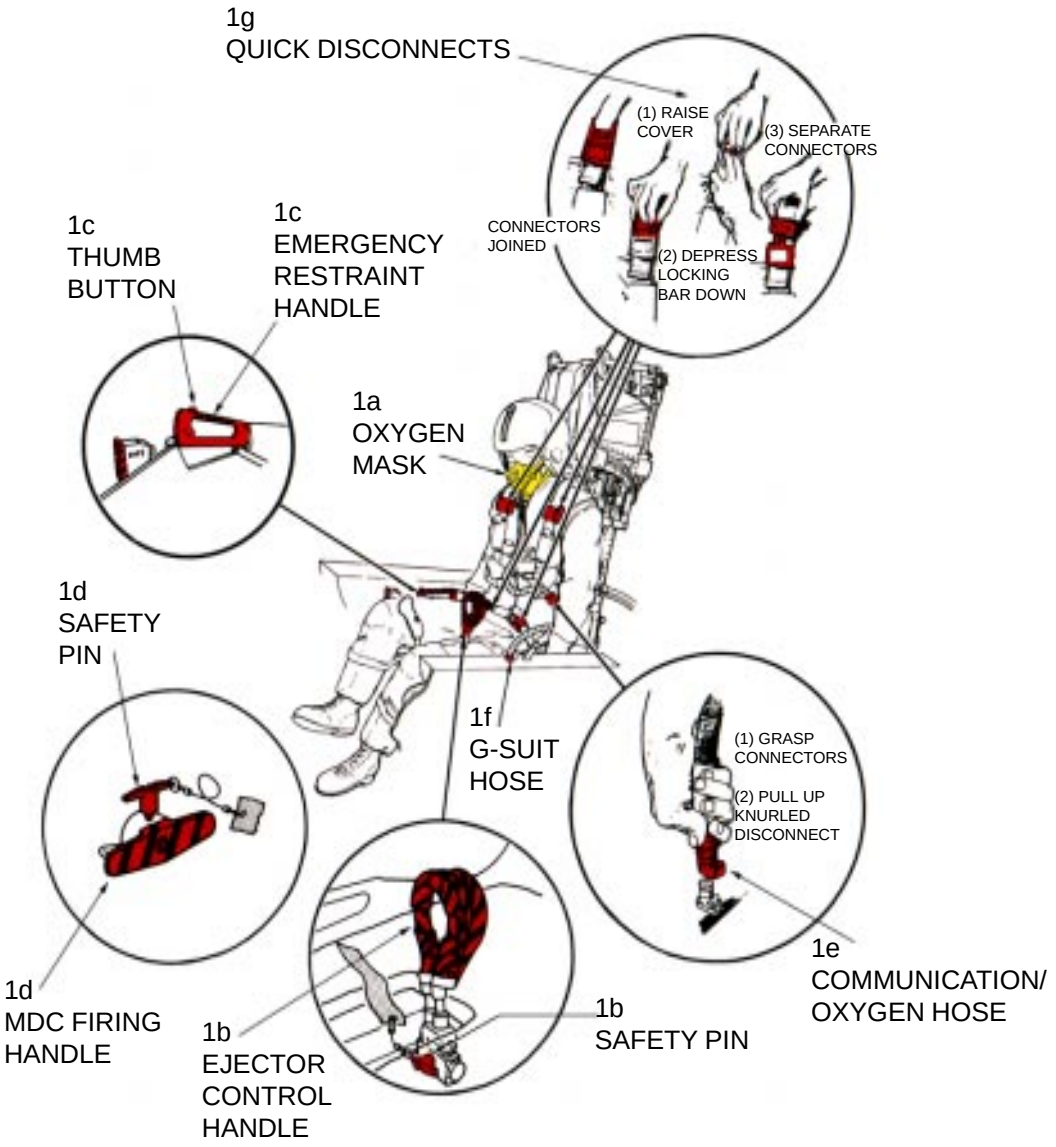

NOTE

Chapter 25 contains emergency rescue and mishap response information for the following aircraft:

USN	**AH-1W**
USN	**H-2**
USN	**H-46**
USN	**H-53D**
USN	**H-53E**
USN	**UH/SH-3H**
USN	**HH-60H/SH-60**
USN	**TH-57**
USN	**UH-1N**

CHAPTER 25

U.S. NAVY

HELICOPTER

AEROSPACE EMERGENCY RESCUE AND MISHAP RESPONSE INFORMATION

25-1. INTRODUCTION AND USE.

25-2. This section contains emergency rescue and mishap response information illustrations in alphanumerical order relative to type and model of aircraft. This arrangement of illustrations is maintained from Chapter 4 throughout the remainder of the publication.

25-3. GENERAL ARRANGEMENT.

25-4. Aircraft type designation has been positioned in the upper right corner of the horizontal illustration for rapid identification. Additional aids to rapid orientation are:

a. Recent technological advances in aviation have caused concern for the modern firefighter. Aircraft hazards, cabin configurations, airframe materials, and any other information that would be helpful in fighting fires, the locating and rescue of personnel will be added as the information becomes available.

b. Suggested special tools/equipment are listed in the upper left corner, on the Aircraft/Entry page of each listed aircraft.

c. Procedural steps covering emergency/normal entrances, cut-ins, engine/APU shutdown, safetying ejection/escape systems, and aircrew extraction are outlined on the left side of each page with coordinated illustrations on the right.

d. Illustrations located on right side of pages are coordinated with text by numerals and small letters depicting both paragraph and subparagraph on the page.

e. Each illustration is consistently colored and/or pattern keyed to highlight essential emergency rescue information.

f. Details are pulled directly from the illustration to highlight an area, thus eliminating unnecessary searching for desired information.

AIRCRAFT HAZARDS

NOTE:

The US Navy AH-1 is the similar to the US Army AH-1. Refer to Chapter 13, pages AH-1S.1 thru AH-1S.5 for additional procedures.

		T	W
ROTOR MINIMUM GROUND CLEARANCE	MAIN	8' 11"	9'
	TAIL	4' 8"	2' 6"
ROTOR DISC DIAMETER	MAIN	4' 8"	48'
	TAIL	9' 8"	9' 9"

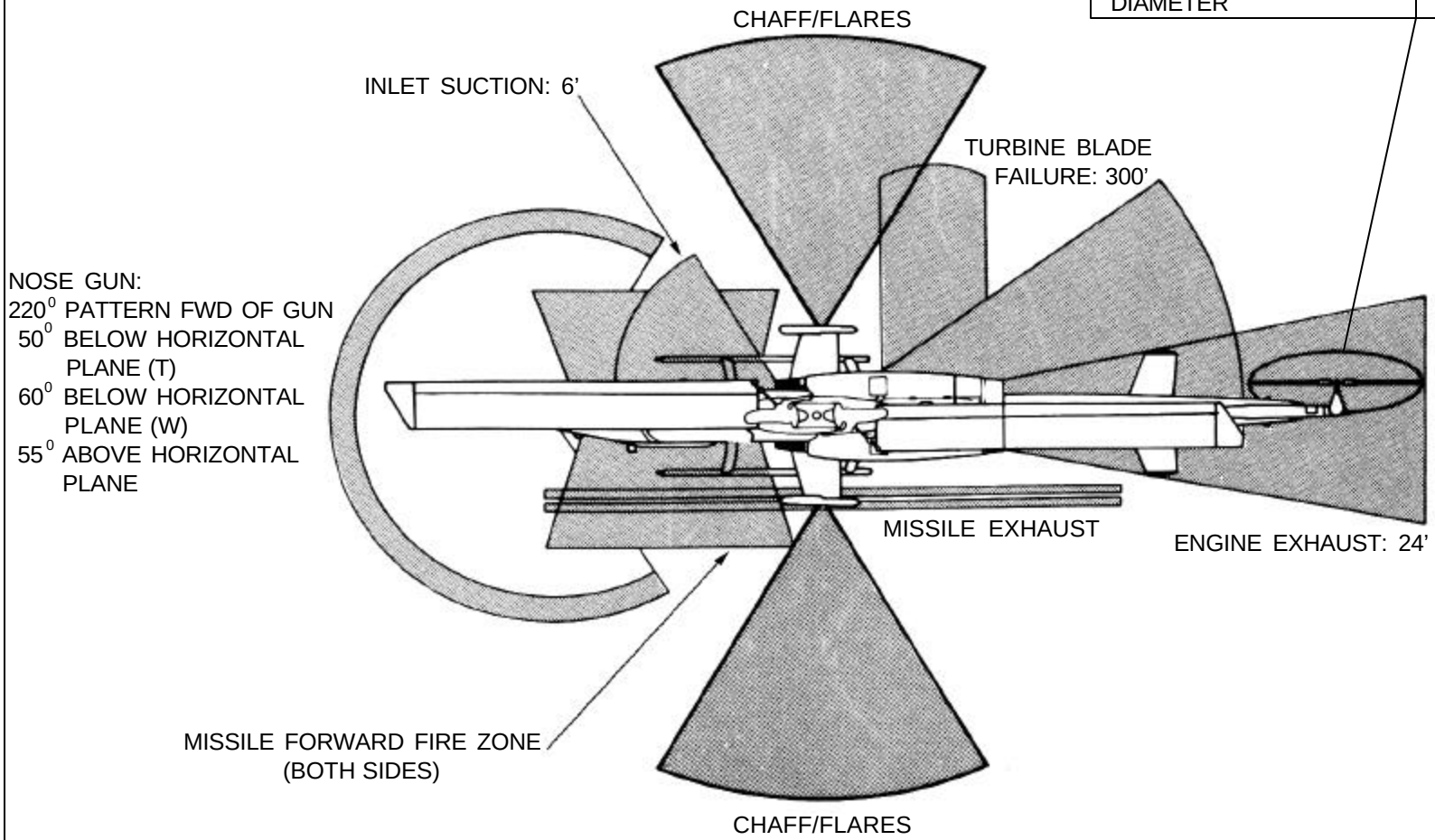

AIRCRAFT HAZARDS-Continued AND AIRFRAME MATERIALS

ARMAMENT:
GRENADE LAUNCHER
EJECTOR CARTRIDGES (TMS)

OTHER:
CHAFF/FLARES

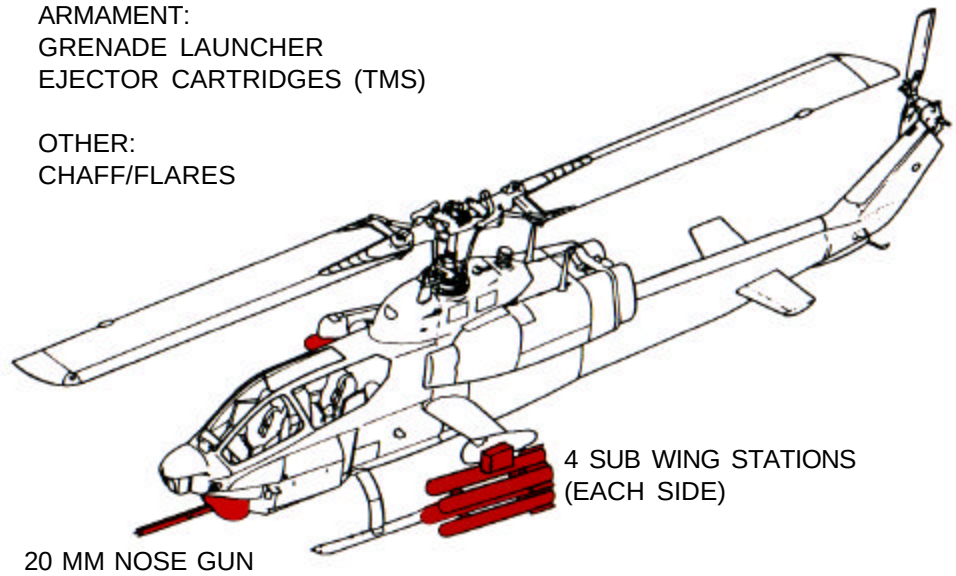

LEGEND

- ALUMINUM
- STEEL
- TITANIUM
- OTHER: FIBERGLASS
- Graphite fabric, covered plastic, honeycomb core
- Glass fabric, covered plastic, honeycomb core
- Glass fabric covered, rigid foam core

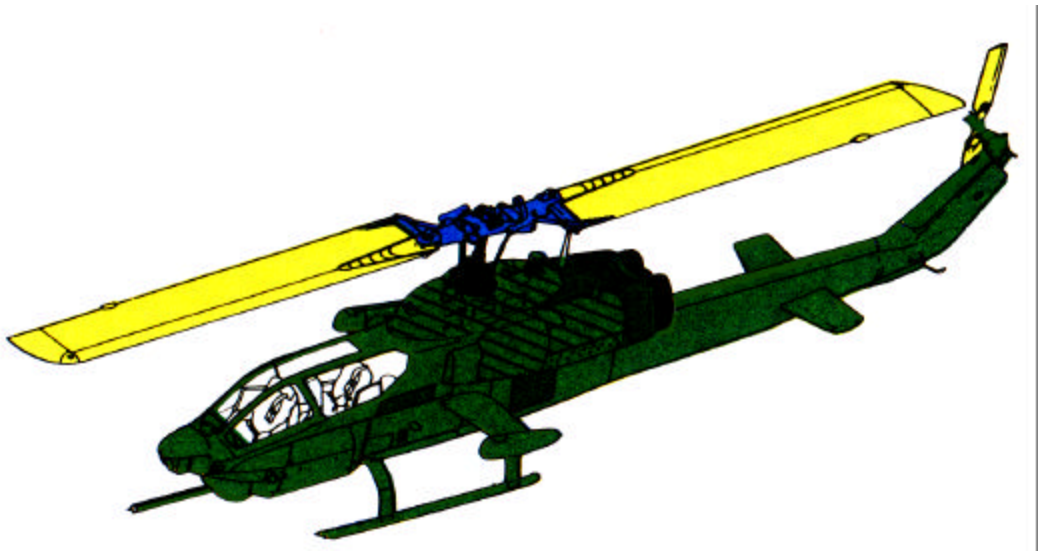

SPECIAL TOOLS/EQUIPMENT
Power Rescue Saw
Crash Ax

NOTE:
Pneumatic system:
1500 PSI (J)
3000 PSI (T)
2000 PSI (W)

AIRCRAFT ENTRY

1. NORMAL ENTRY

a. The pilot canopy door opening is on the right side and the co-pilot/gunner door is on the left side. Both doors are pneumatically opened and closed from outside. To open either, turn door handle and it will automatically raise to full open position.

2. EMERGENCY ENTRY

a. The external canopy jettison system is located in the nose of the aircraft. Open access door, remove safety pin from arm/fire mechanism, rotate ring 90^0 counterclockwise, and pull ring to shatter windows.

WARNING

Do not shatter canopies with fuel in cockpit area, fire and explosion may result. Ensure personnel are clear of cockpit area before using jettison system. Personnel within 50 feet of aircraft could be injured by debris when jettison system is used.

3. CUT-IN/FORCED ENTRY

a. Canopies are made of acrylic plastic and may be cut using a power rescue saw or crash ax. Cut along canopy frames.

4. CANOPY SAFETY

NOTE:
Canopies have a linear explosive system used to cut the windows from support structure for emergency entrance or exit.

a. To safety canopy, insert safety pins in pilot's and co-pilot/gunner's canopy jettison handle.

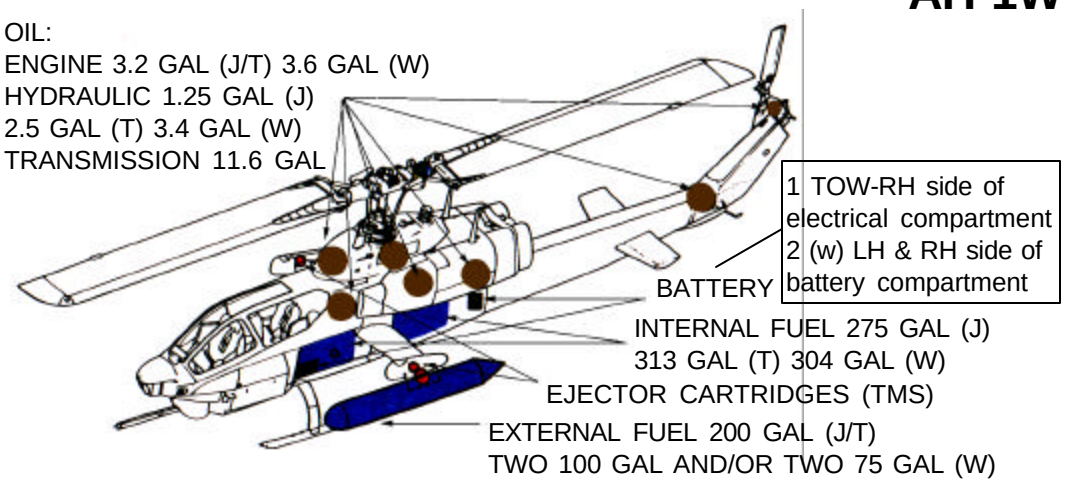

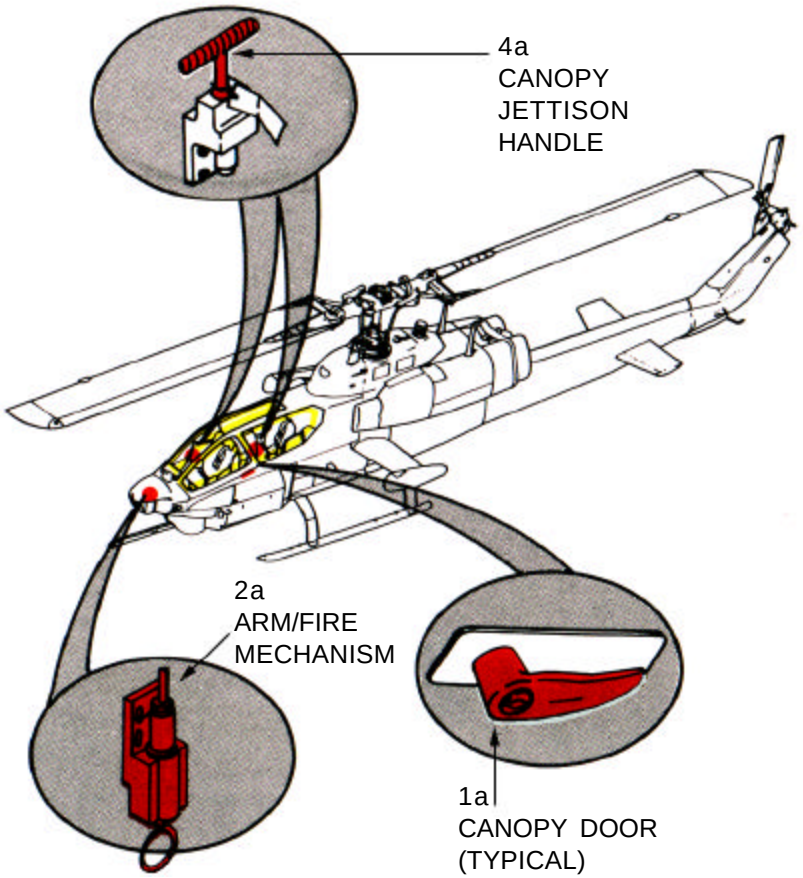

ENGINE SHUTDOWN

1. NORMAL ENGINE SHUTDOWN

a. Move idle stop release switch, located on left console, to engine #1 position and close throttle for engine #1 by turning grip to the right. Repeat procedure for engine #2.

NOTE:
Close throttle within 5 seconds after actuating idle stop release.

b. Place both engine #1 and #2 fuel shutoff switches, located on left console forward of throttle, in OFF position.

c. Place battery switch(es), located on left console, in OFF position. See illustration for model designation.

2. EMERGENCY ENGINE SHUTDOWN

a. Pull both #1 and #2 fire pull handles located on center of forward instrument panel.

b. Place battery switch(es), located on left console, in OFF position. See illustration for model designation.

c. If battery switches are inaccessible, disconnect batteries externally if time and access permits.

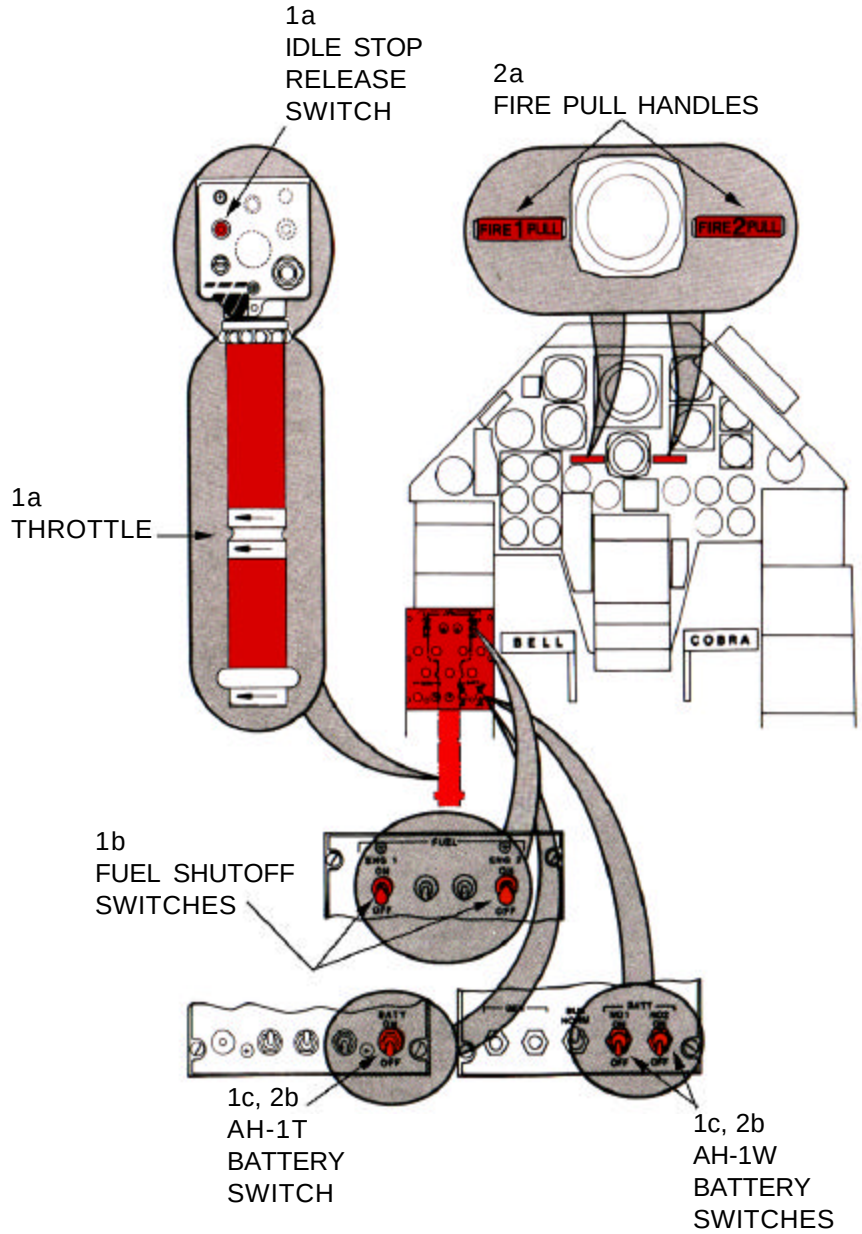

AIRCREW EXTRACTION

1. AIRCREW EXTRACTION

NOTE:
Pilot and co-pilot/gunner are attached to the seats by shoulder harnesses secured to lap belts with quick disconnects.

a. Lift quick disconnect lever to release shoulder harnesses and lap belt.

b. Disconnect microphone cord, located behind crewmember when leaning forward, prior to lifting crewmember from seat.

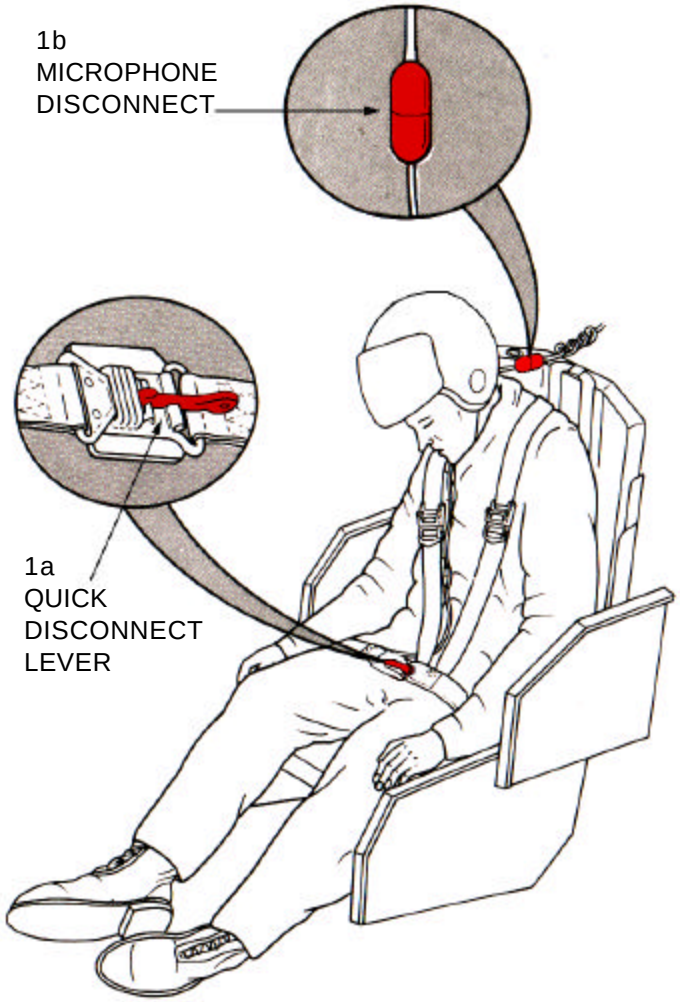

AIRCRAFT HAZARDS

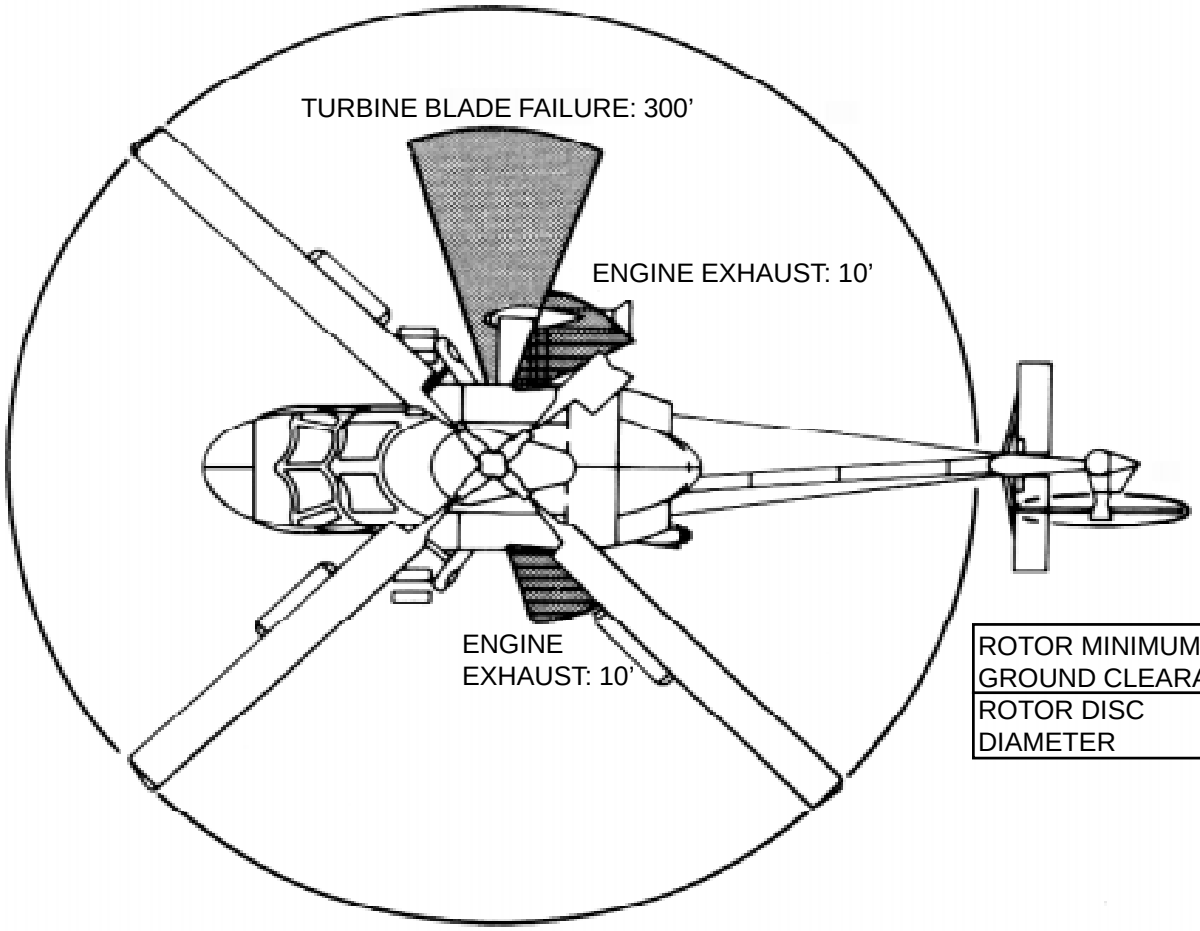

ROTOR MINIMUM GROUND CLEARANCE	MAIN	8’ 7”
	TAIL	6‘ 11”
ROTOR DISC DIAMETER	MAIN	44’
	TAIL	8’ 2”

AIRCRAFT HAZARDS-Continued AND AIRFRAME MATERIALS

ARMAMENT:
- 2 FUSELAGE STATIONS
- MK 25 SMOKE MARKERS
- PASSIVE SONOBUOYS
- ACTIVE SONOBUOYS
- MK 46 TORPEDOES
- CHAFF/FLARES

LEGEND

- ALUMINUM
- STEEL
- TITANIUM
- OTHER: FIBERGLASS

SPECIAL TOOLS/EQUIPMENT
Power Rescue Saw
Crash Ax

AIRCRAFT ENTRY

1. NORMAL ENTRY

a. There are normally two sliding entrance doors; one on the left provides access to the forward cockpit and a large door on the right provides access to the forward cockpit and aft cabin. On HH-2D aircraft, an additional door on the left provides access to aft cabin only.

2. EMERGENCY ENTRY

a. Break pilot/co-pilot's windows and push interior jettison handles forward to jettison doors.

3. CUT-IN/FORCED ENTRY

a. Windows are made of acrylic plastic and may be cut using power rescue saw or crash ax. Cut along window frames and marked fuselage entry areas only.

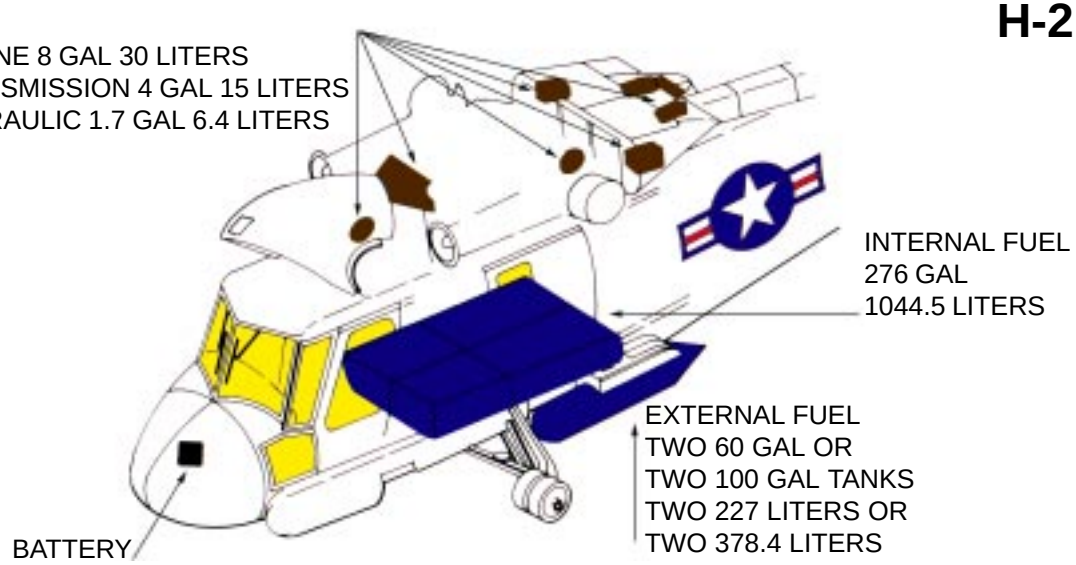

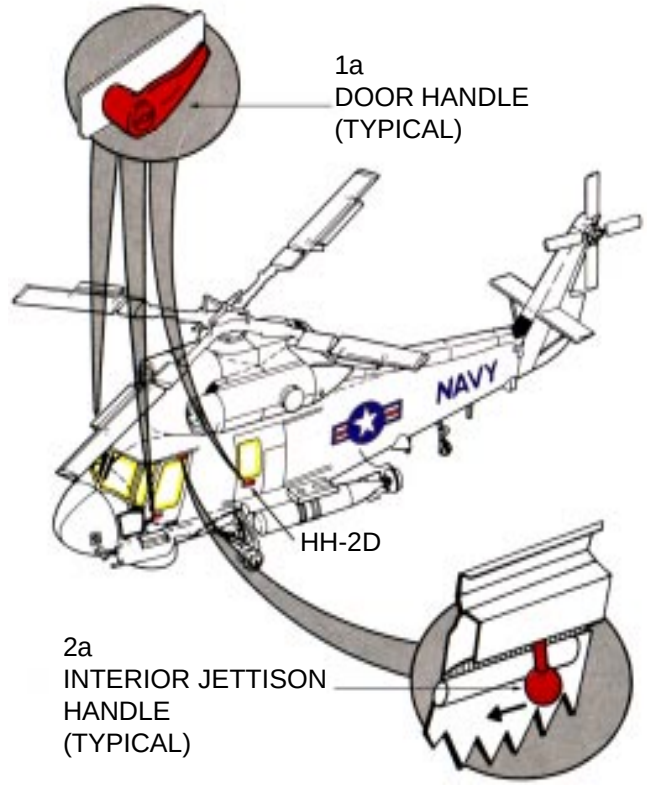

ENGINE SHUTDOWN AND BATTERY DISCONNECT

1. ENGINE SHUTDOWN

a. To shut off engine fuel flow, move engine condition levers, located on center console, to full AFT/OFF position.

b. Place fuel pumps switch, located on center overhead panel, in OFF position.

c. Place battery switch, located just left of fuel pumps switch on center overhead panel, in OFF position.

2. BATTERY DISCONNECT

a. If battery, located on the right side under the forward cockpit floor, requires disconnecting, access is made through aircraft nose doors via two latches.

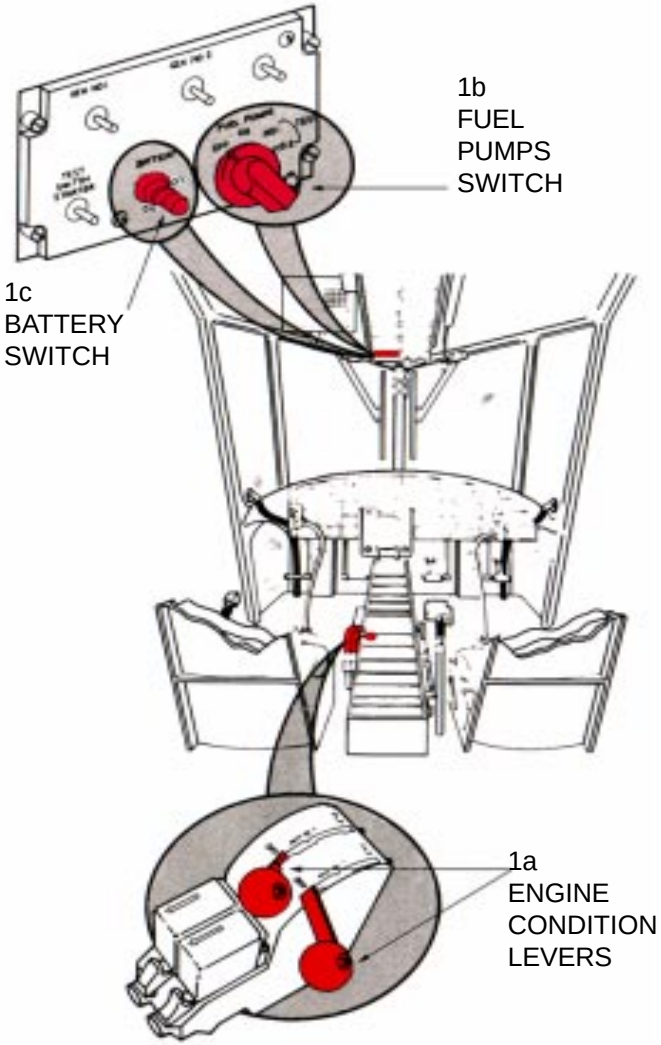

AIRCREW EXTRACTION

1. AIRCREW EXTRACTION

NOTE:
The pilot, co-pilot, sensor operator, and instructor are attached to the seat by shoulder harnesses secured to the lap belt. Troop/passenger seats in some aircraft compartment configurations have lap belts only.

a. Lift quick disconnect lever to release shoulder harnesses and lap belt for crewmembers.

b. Lift buckle cover to release lap belt from troops/passengers. These are airline types.

NOTE:
Instructor's seat is not illustrated.

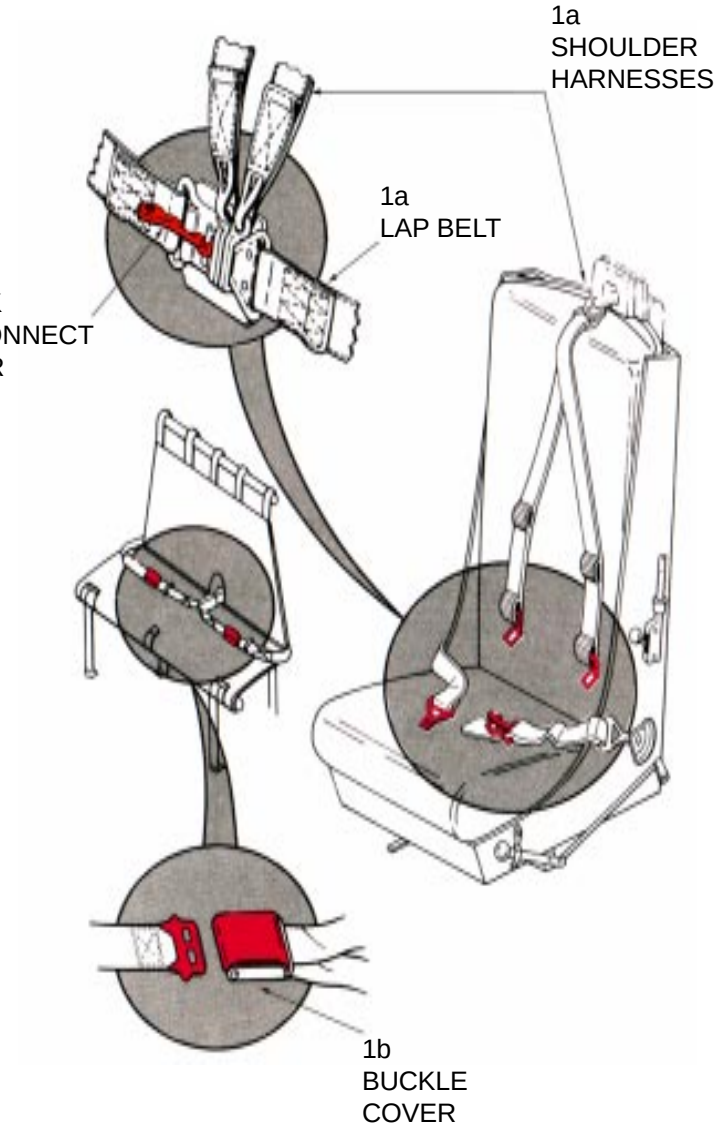

AIRCRAFT HAZARDS

ROTOR MINIMUM GROUND CLEARANCE	MAIN	10’ 11”
	TAIL	15’ 10”
ROTOR DISC DIAMETER	MAIN	84’ 4”
	TAIL	51’

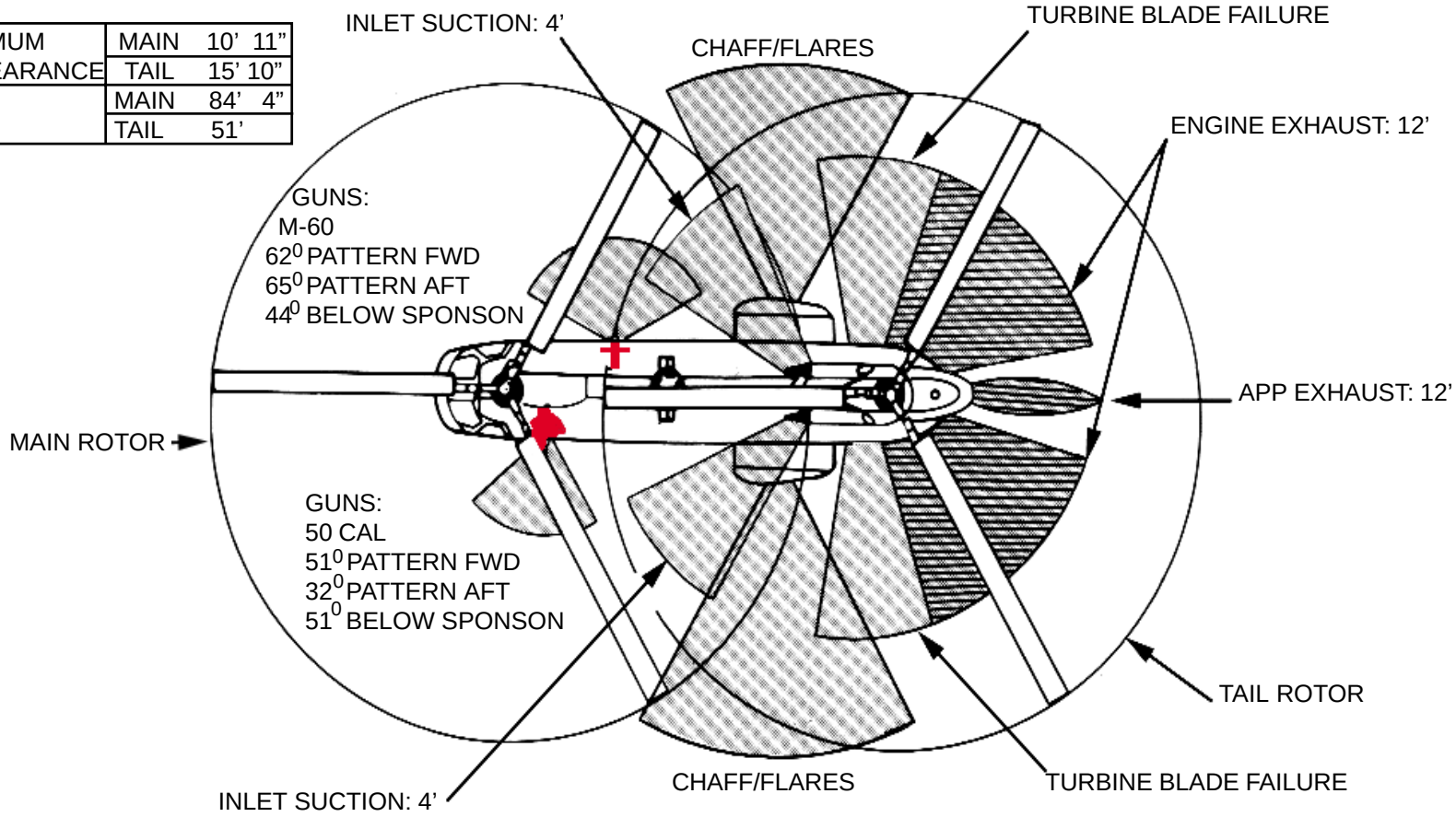

AIRCRAFT HAZARDS-Continued AND AIRFRAME MATERIALS

OIL:
ENGINE 13 GAL (CH-46E)
4.2 GAL (H-46A/D)
HYDRAULIC 5.77 GAL (CH-46E)
2.25 GAL (H-46A/D)
TRANSMISSION 9 GAL

NOTE:
Pneumatic system is 3000 PSI.

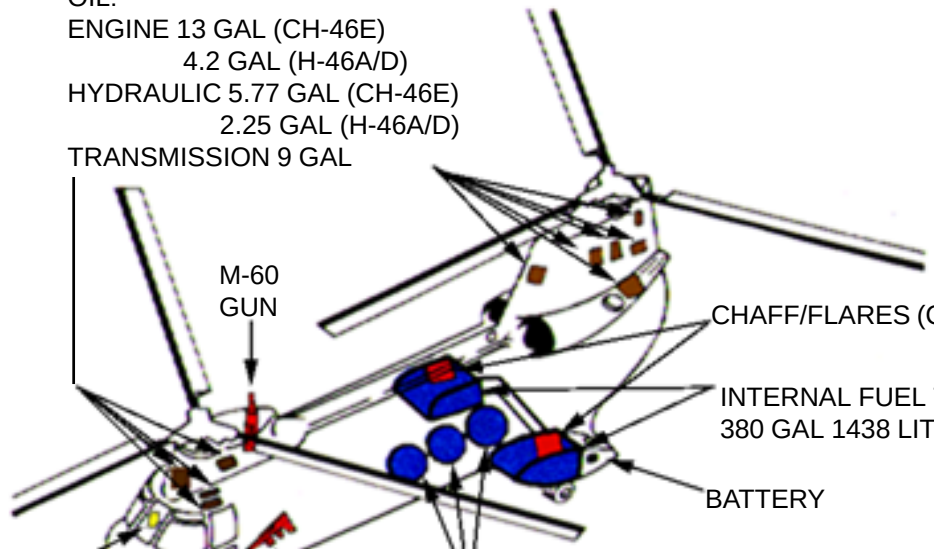

LEGEND

- ALUMINUM
- STEEL
- TITANIUM
- OTHER: FIBERGLASS

SPECIAL TOOLS/EQUIPMENT
Power Rescue Saw
Crash Ax

AIRCRAFT ENTRY

1. NORMAL ENTRY

a. Normal entry is through main cabin door on right side. The door has an upper and lower door which operate separately. To open upper portion, push handle to expose, turn handle clockwise, move door inward slightly and roll up until the uplock is engaged. The lower door opens out and down. To open, push handle, turn handle counterclockwise and pull door out and down.

2. EMERGENCY ENTRY

NOTE:
Emergency entrance may be gained through pilot/co-pilot jettisonable windows, three fuselage windows, the emergency access hatch, and the cargo ramp/hatch.

a. To open pilot/co-pilot's jettisonable window push handle, turn handle clockwise and pull.
b. Three windows, two on right side and one on left side are marked rescue. To open, pull tape out (upper left corner of window) the push panel inward.
c. To open the emergency access hatch (CH-46E left side), also marked rescue, pull tape out and push panel inward.
d. The cargo ramp/hatch controls are located on right side, above stub wing (rear). To access controls, push button on access door. The system consists of three control levers. With hydraulic pressure, actuate both ramp and hatch by pushing ramp control handle and cargo hatch control handle aft. With hydraulic pressure, only ramp will operate. To lower ramp, push ramp control handle aft then push ramp auxiliary control hanlde aft.

3. CUT-IN/FORCED ENTRY

a. Windows are made of acrylic plastic and may be cut or broken. Areas marked on fuselage CUT HERE also may be cut out. Cut along window frames and marked fuselage areas only.

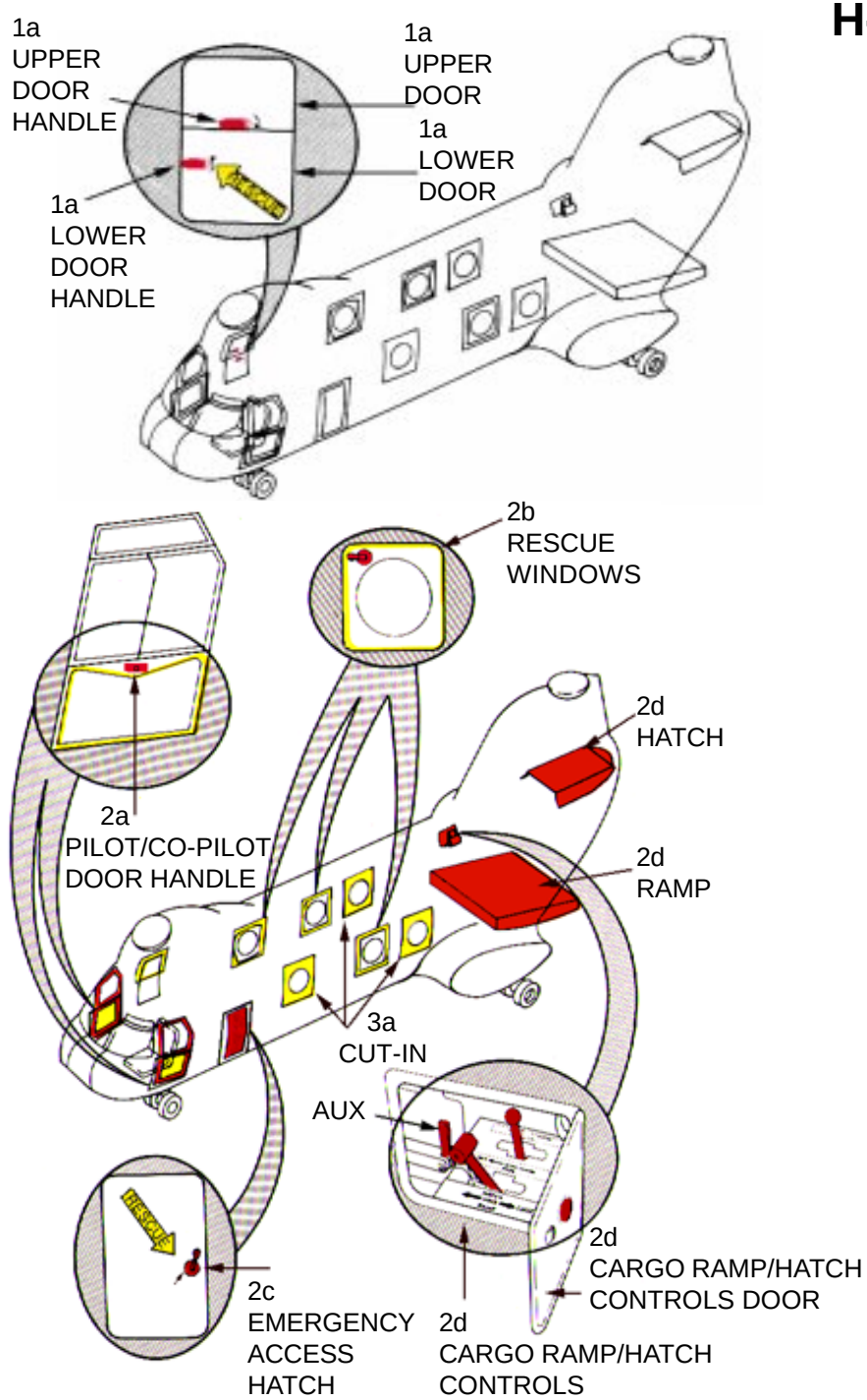

ENGINE AND APU SHUTDOWN AND BATTERY DISCONNECT

1. ENGINE SHUTDOWN

a. Pull condition levers, located on center console, fully aft to STOP position.

2. APU SHUTDOWN

a. Place the power off switch, located on a electrical control panel on the overhead console, in OFF position.

b. Place the power control master switch, same location as step 2a, in the OFF position.

c. Place the APU switch, same location as step 2a, in the STOP position.

d. Deactivate the electrical system by placing the battery switch, same location as step 2a, in the OFF position.

3. BATTERY DISCONNECT

a. Disconnect the battery, located in the left wheel well, if battery switch can not be accessed on the flight deck, or presents a hazard.

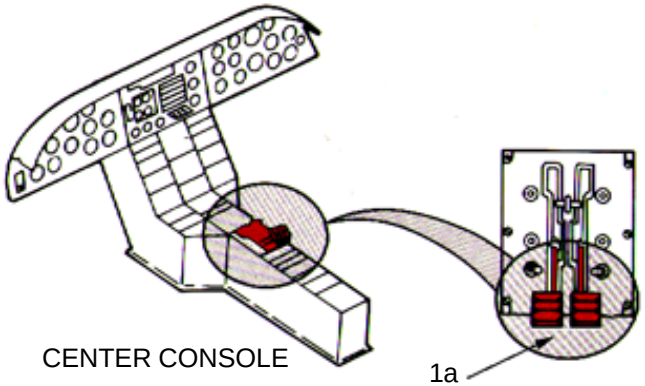

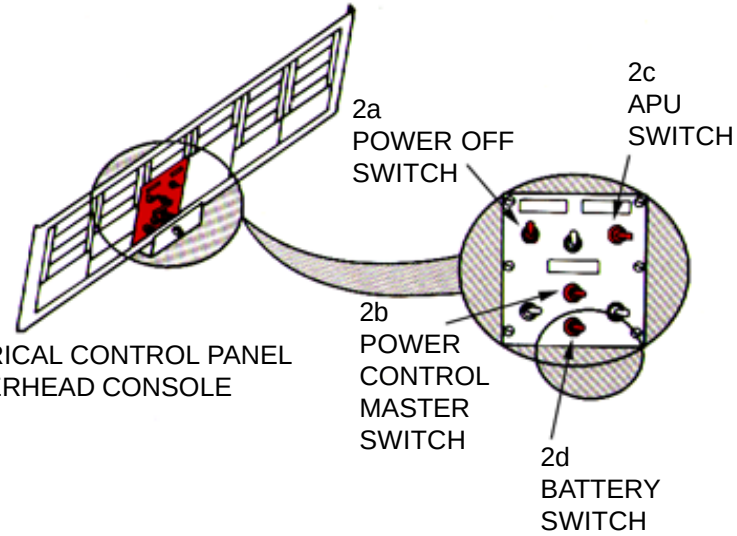

AIRCREW EXTRACTION

1. AIRCREW EXTRACTION

NOTE:
The pilot, co-pilot, sensor operator, and instructor are attached to the seat by shoulder harnesses secured to the lap belt. Troop/passenger seats in some aircraft compartment configurations have lap belts only.

a. Lift quick disconnect lever to release shoulder harnesses and lap belt for crewmembers.

b. Lift buckle cover to release lap belt from troops/passengers. These are airline types.

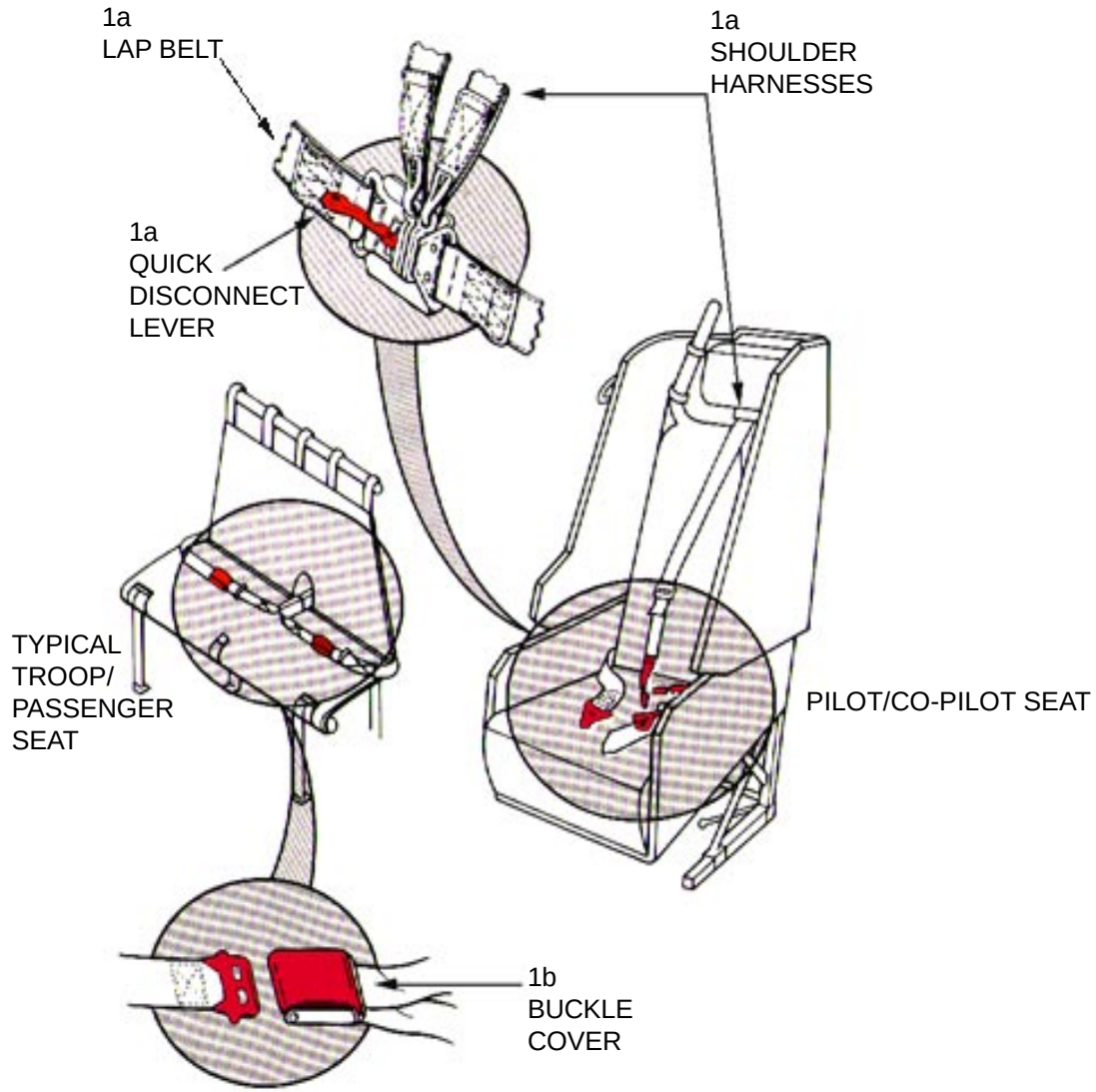

AIRCRAFT HAZARDS

ROTOR MINIMUM GROUND CLEARANCE	MAIN	10’ 4”
	TAIL	8’ 9”
ROTOR DISC DIAMETER	MAIN	72’ 2”
	TAIL	16’

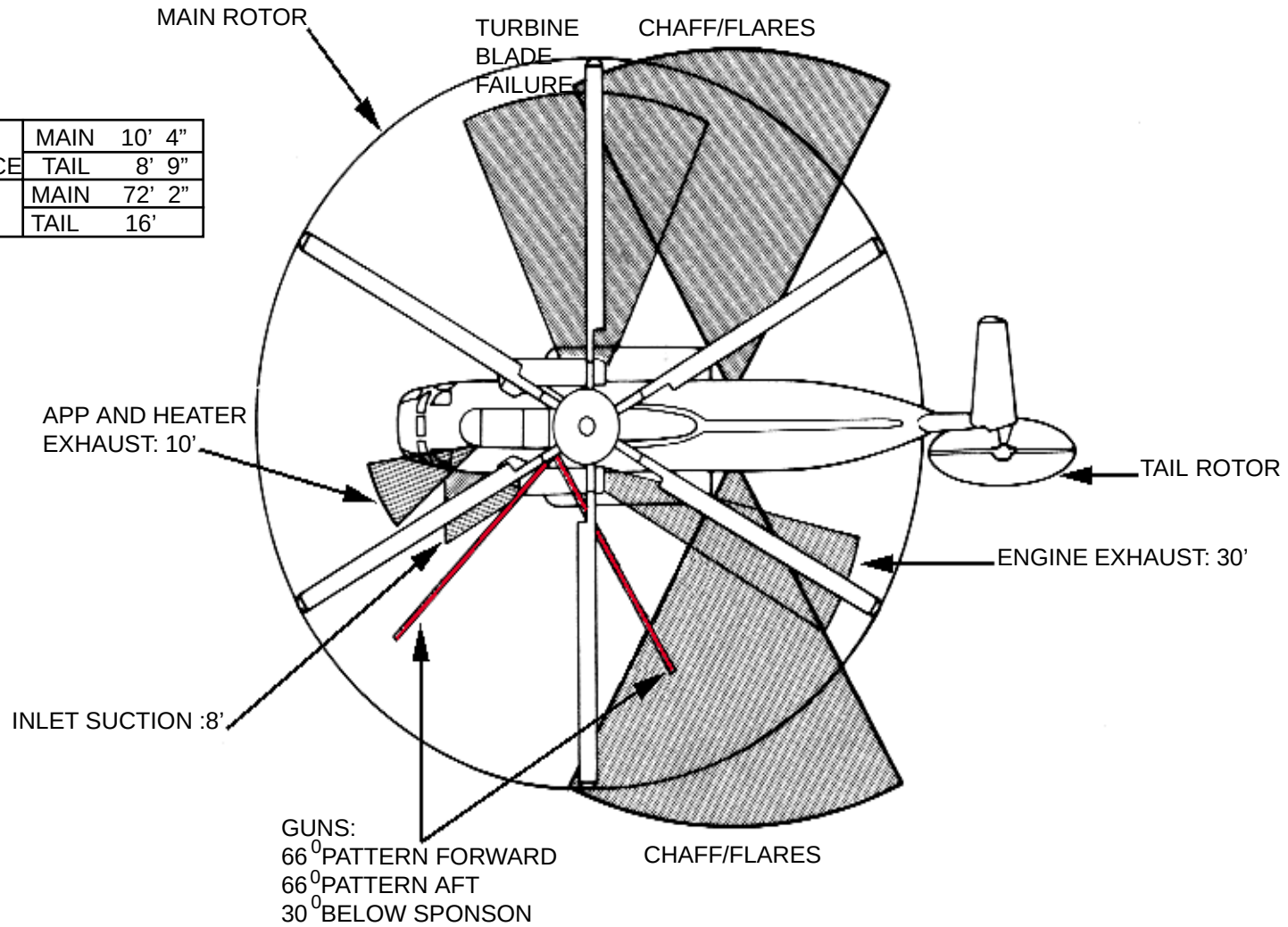

AIRFRAME MATERIALS

LEGEND

- ALUMINUM
- STEEL
- TITANIUM
- OTHER: FIBERGLASS

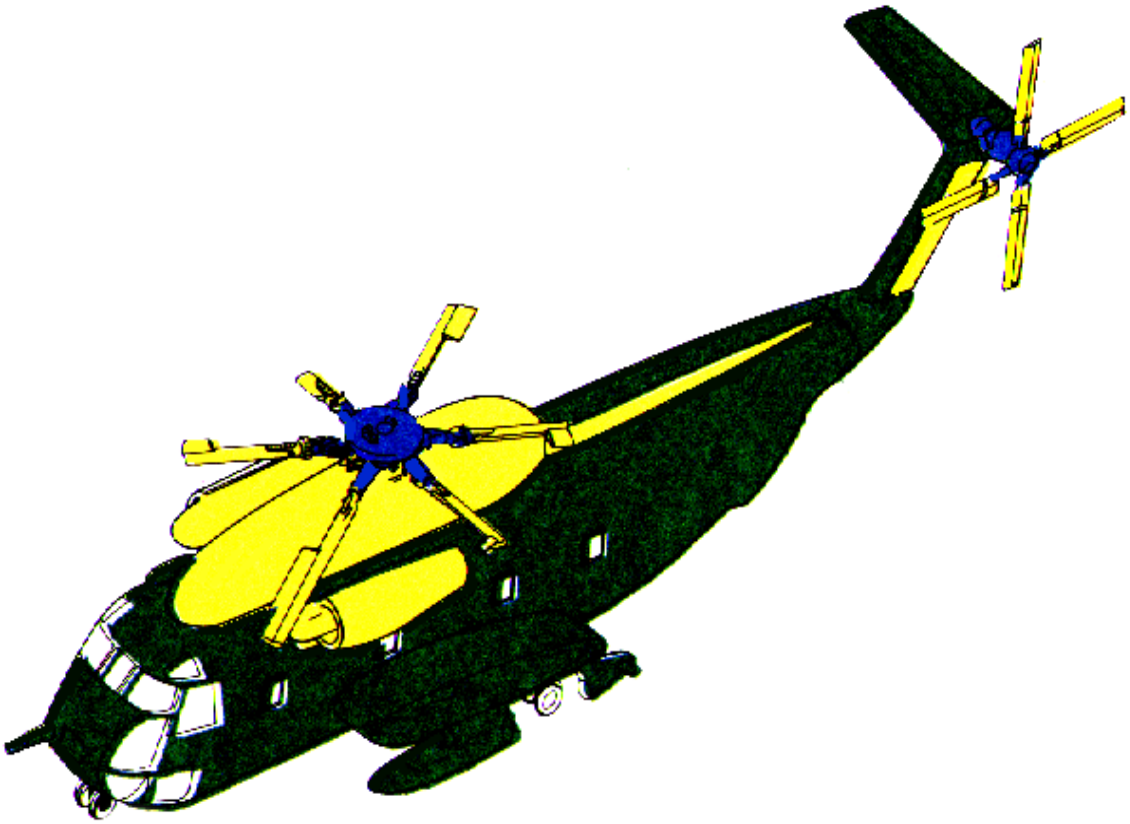

SPECIAL TOOLS/EQUIPMENT
Power Rescue Saw
Crash Ax

AIRCRAFT ENTRY

1. NORMAL ENTRY

a. The upper half of personnel door may be opened from outside by pressing button and turning handle counterclockwise. Push upper half up to cabin ceiling and turn handle counterclockwise to lock in OPEN position. The lower half of personnel door opens down. Push button, turn handle counterclockwise and pull.

2. EMERGENCY ENTRY

a. The pilot/co-pilot's compartment window may be opened by pressing button and turning handle.

b. The cabin emergency escape hatch (left forward side of cabin) may be opened by pressing button, turning handle counterclockwise and pushing inward.

c. Upper half of personnel door may be jettisoned by turning handle and pull outward.

3. CUT-IN/FORCED ENTRY

a. Windows are made of acrylic plastic and may be cut or broken. Areas marked on fuselage CUT HERE also may be cut for access. Cut along window frames and marked fuselage areas only.

OIL:
ENGINES 8.04 GAL
HYDRAULIC 6.5 GAL
TRANSMISSION 22.5 GAL

NOTE:
Pnuematic system is 3000 PSI.

NOTE:
There are two external fuel tank ejector cartridges.

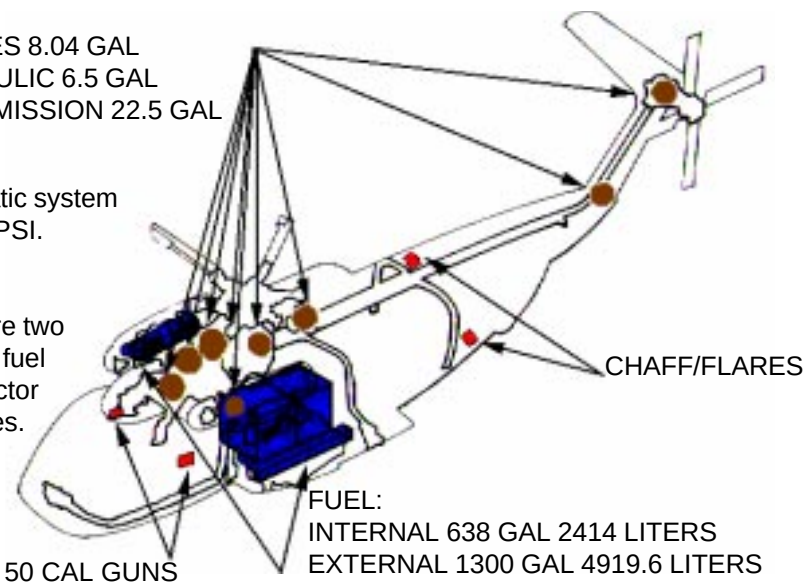

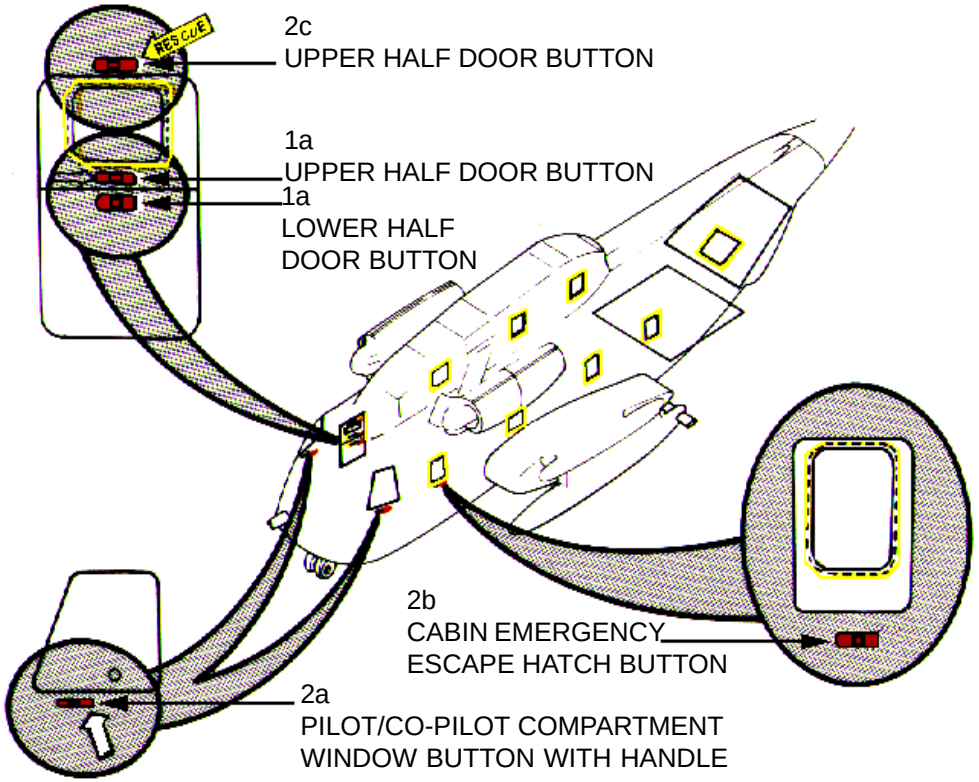

ENGINE AND APP SHUTDOWN

NOTE:
Engine may be shut down by speed control and fuel shutoff or an alternate method by the emergency T-handle.

a. Pull engine speed control levers, located on center overhead panel, fully aft to SHUTOFF position.

b. Pull engine emergency T-handles, located on center overhead panel, fully aft. Fuel valves will close.

NOTE:
If only emergency T-handles are used, the engines will continue to run for up to 2 minutes before fuel starvation effects a shutdown.

c. Pull auxiliary power plant (APP) control lever, located on center overhead panel, fully aft if the system is operating.

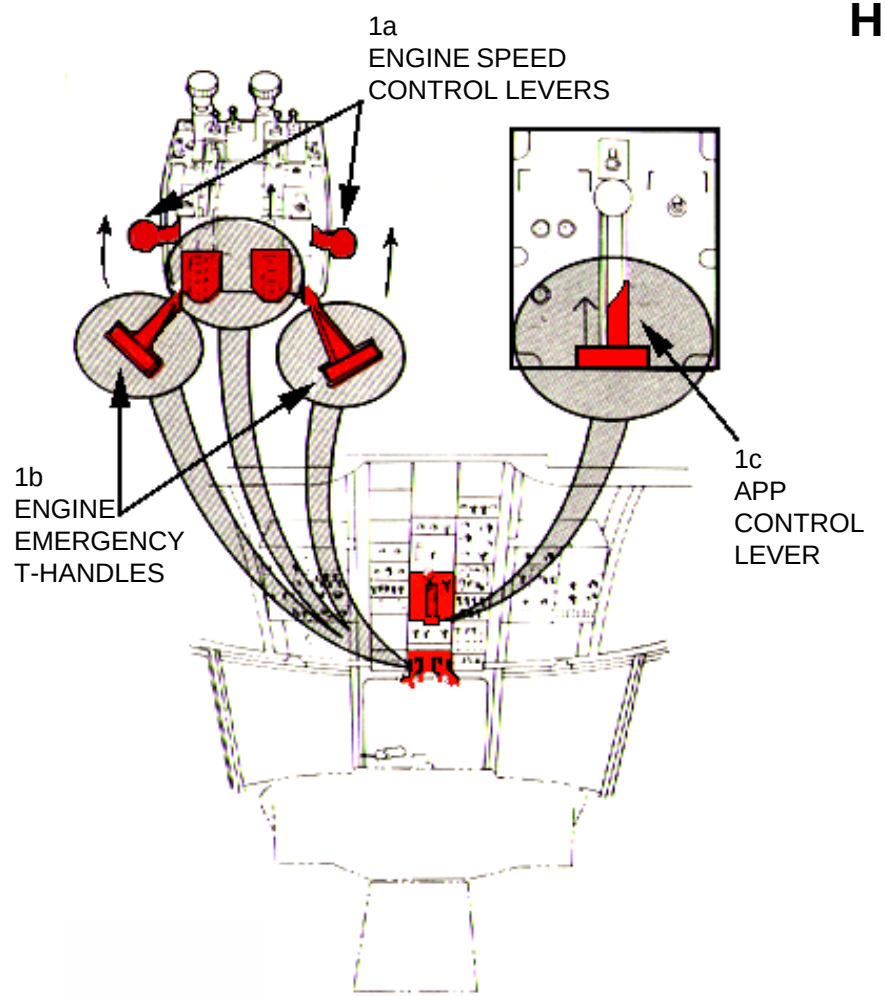

AIRCREW EXTRACTION

1. AIRCREW EXTRACTION

NOTE:
The pilot and co-pilot are attached to the seats by shoulder harnesses secured to the lap belt equipped with a quick disconnect buckle. Troop/passenger seats have lap belts only.

a. Lift quick disconnect lever to release shoulder harnesses and lap belt for crewmembers.

b. Lift buckle cover to release lap belt from troops/passengers. These are airline types.

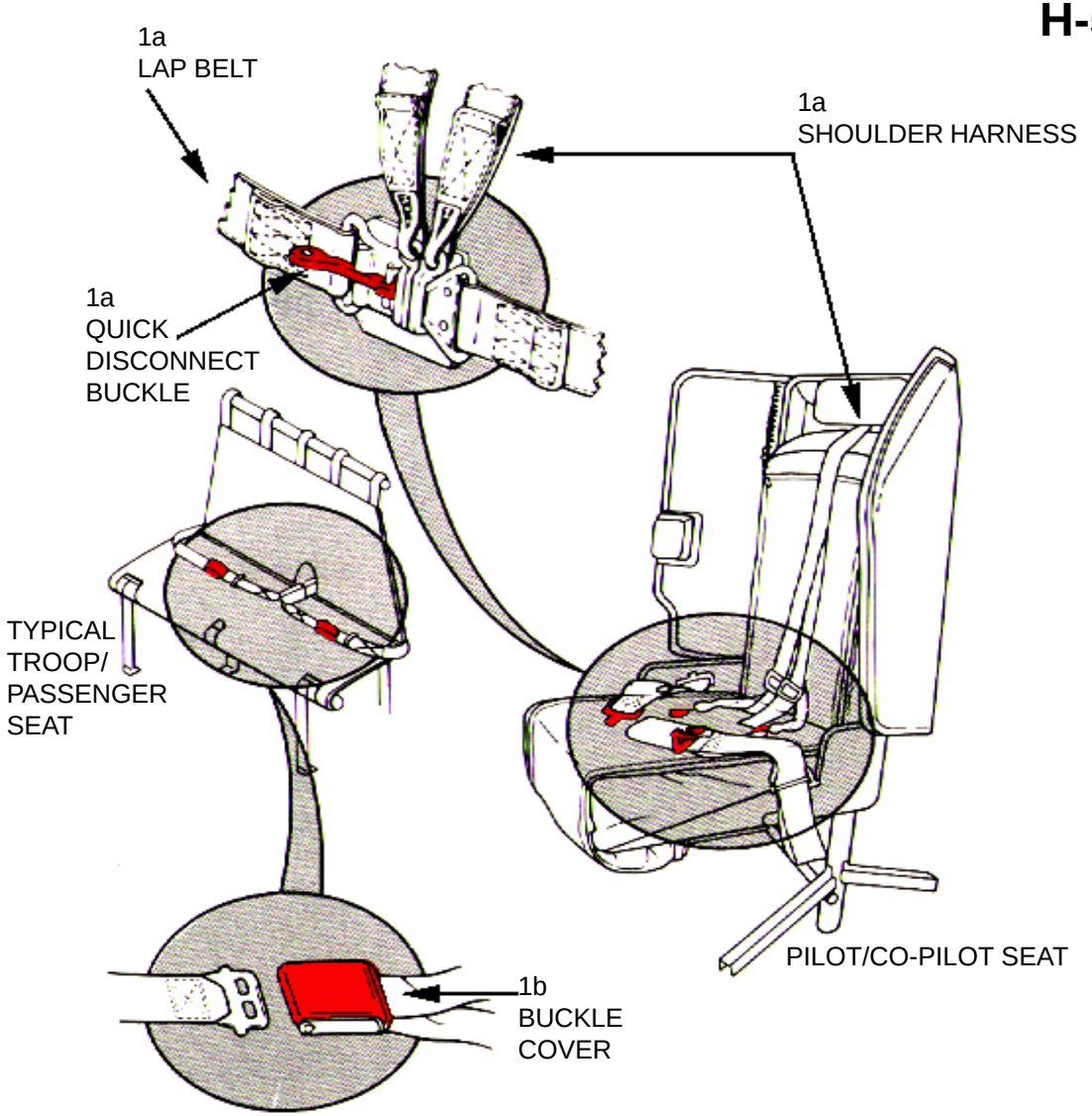

AIRCRAFT HAZARDS

WARNING

Contact with a hovering C/MH-53E may result in injury or death of ground personnel. The C/MH-53E generates an extreme static electrical charge while in flight; prior to physical contact with any part of a hovering helicopter, the helicopter shall be properly grounded.

ROTOR MINIMUM GROUND CLEARANCE	MAIN	8’ 6”
	TAIL	8’ 6”
ROTOR DISC DIAMETER	MAIN	79’
	TAIL	20’

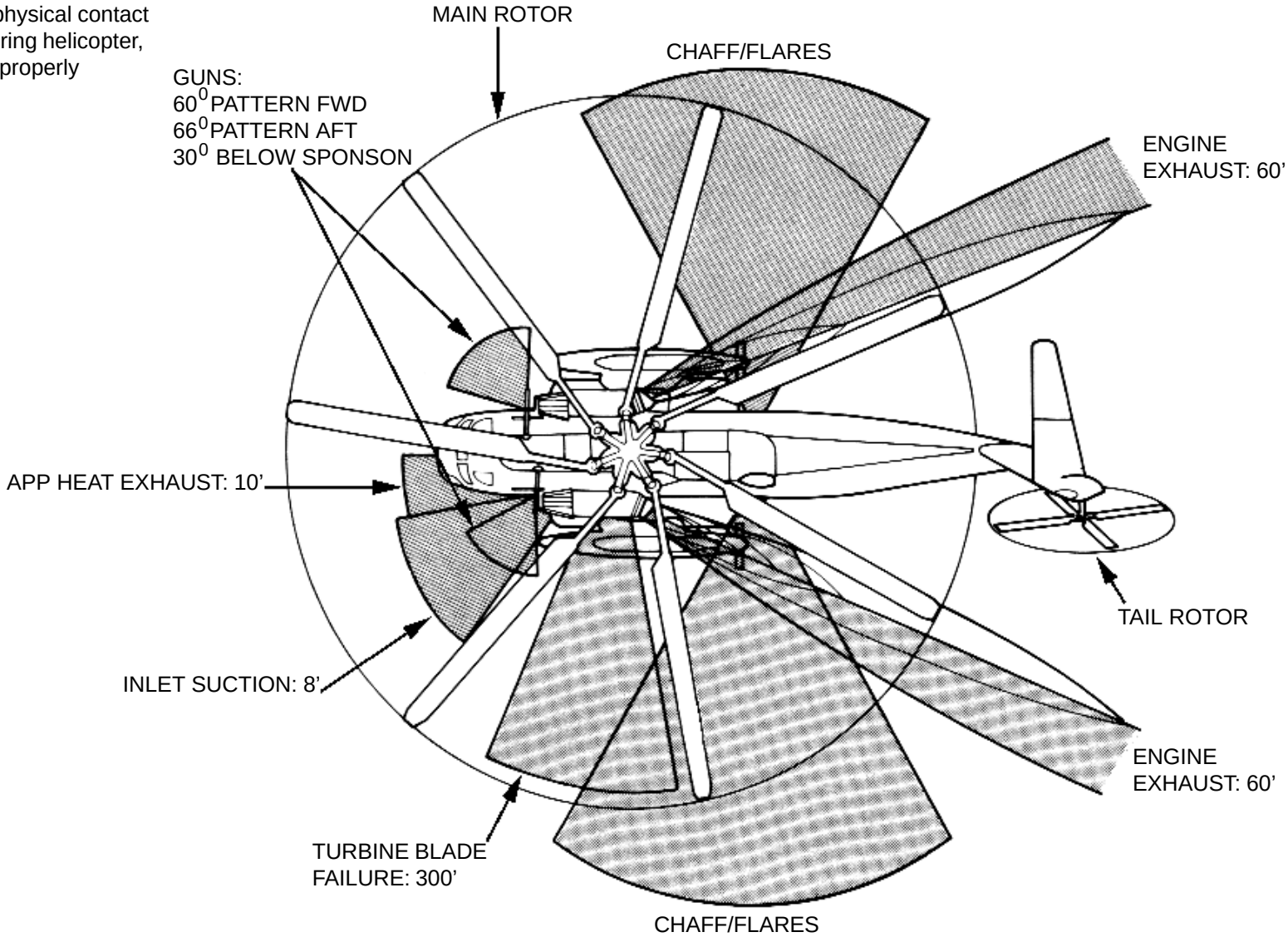

AIRFRAME MATERIALS

LEGEND

- ALUMINUM
- STEEL
- TITANIUM
- OTHER: FIBERGLASS/KEVLAR

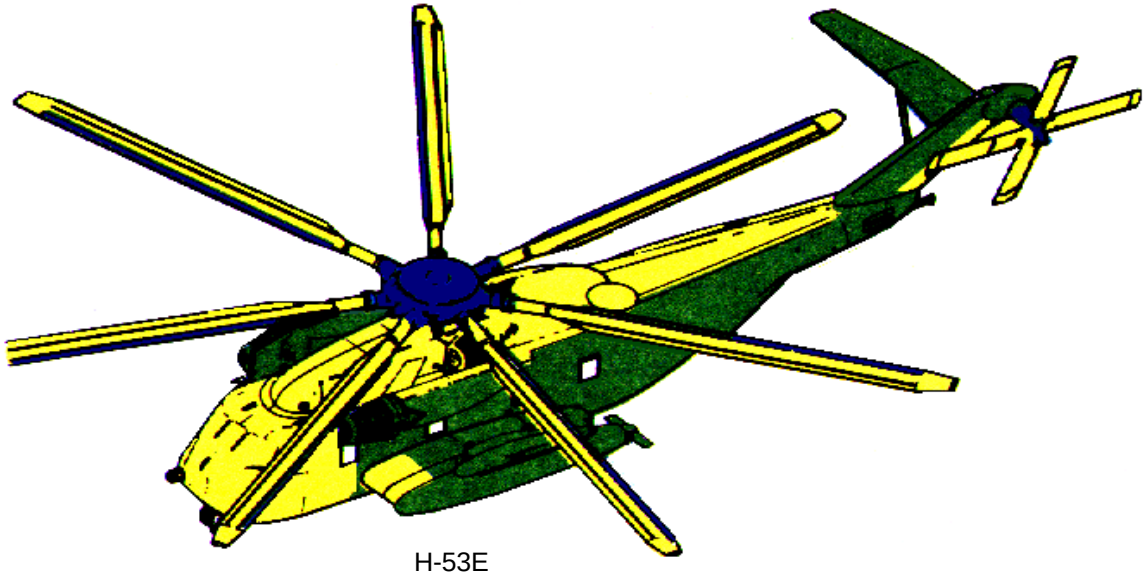

H-53E

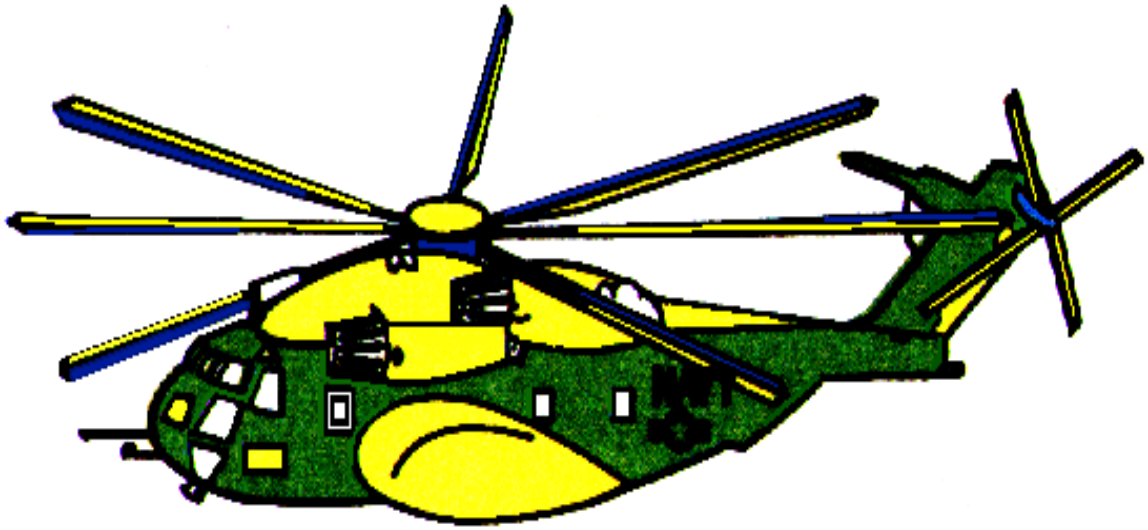

CH-53E/MH-53E

SPECIAL TOOLS/EQUIPMENT
Power Rescue Saw
Crash Ax

GENERAL AIRCRAFT INFORMATION FOR H-53E, CH-53E, AND MH-53E MODELS

NOTE:
Aircraft may be configured with 0-7 range extension tanks (314 gallons or 1188.3 liters each) in the cabin area.

NOTE:
Pneumatic system is 3000 PSI for all models.

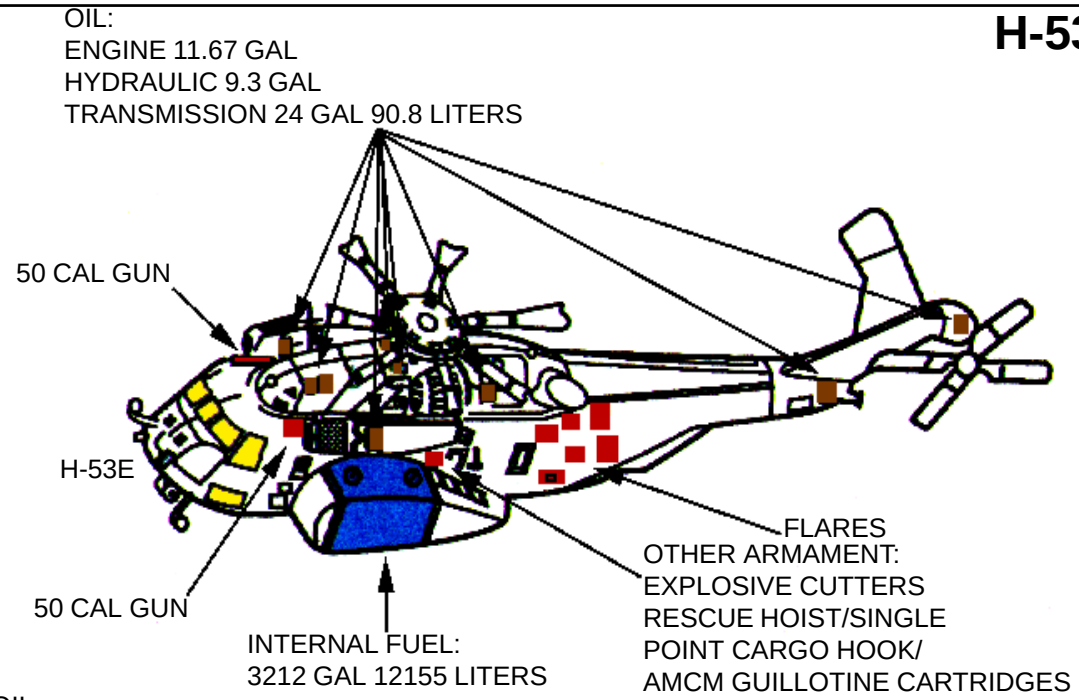

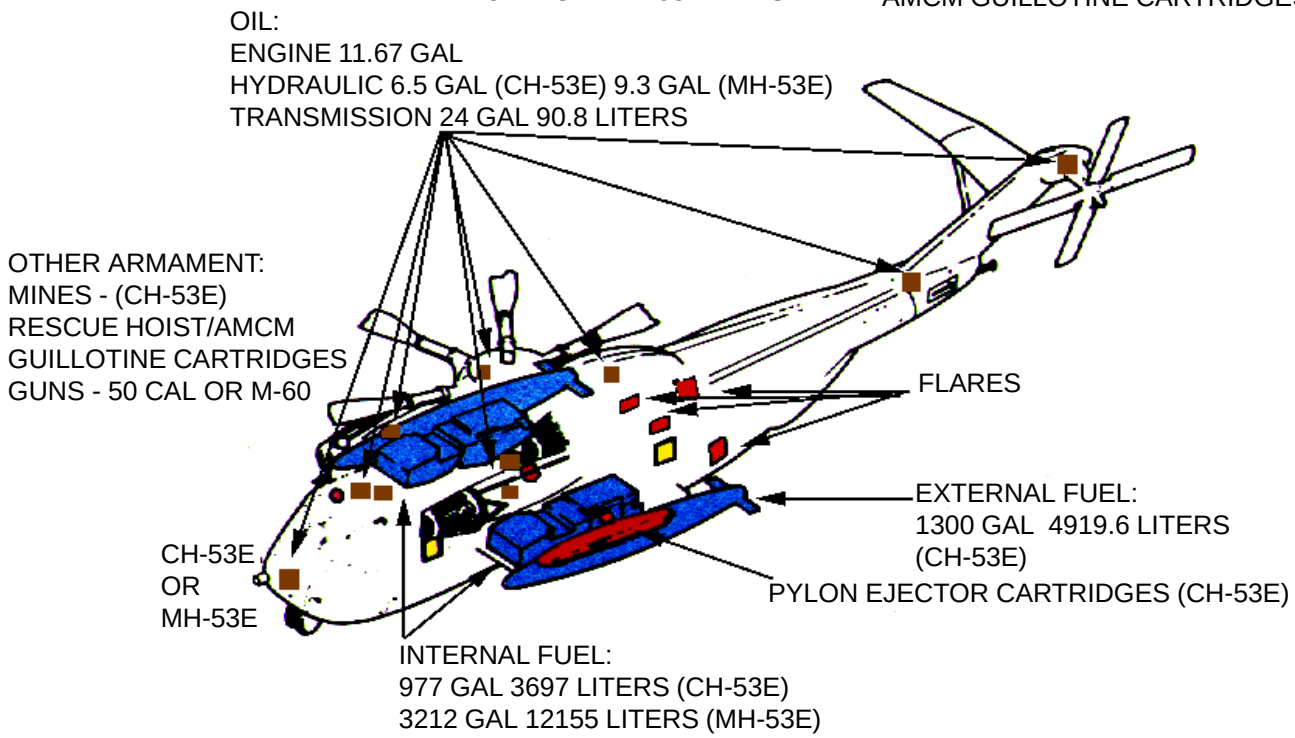

AIRCRAFT ENTRY

1. NORMAL ENTRY

a. The upper half of personnel door may be opened from outside by pressing button and turning handle counterclockwise. Push upper half up to cabin ceiling and turn handle counterclockwise to lock in OPEN position. The lower half of personnel door swings in to right. Push button, turn handle counterclock wise and push.

2. EMERGENCY ENTRY

a. The pilot/co-pilot's compartment window may be opened. Press button and turn handle.

b. The cabin emergency escape hatch (left forward cabin) may be opened. Press button, turn handle counterclockwise and push inward.

3. CUT-IN/FORCED ENTRY

a. Windows are made of acrylic plastic and may be cut or broken. Areas marked on fuselage CUT HERE also may be cut for access. Cut along window frames and marked fuselage areas only.

b. All CH-53E's have a door in the center of the cabin floor. The door has no external handle, however, entry may be gained by cutting three lock bolts. Once cut, bolts may be pulled out allowing door to be pushed inward.

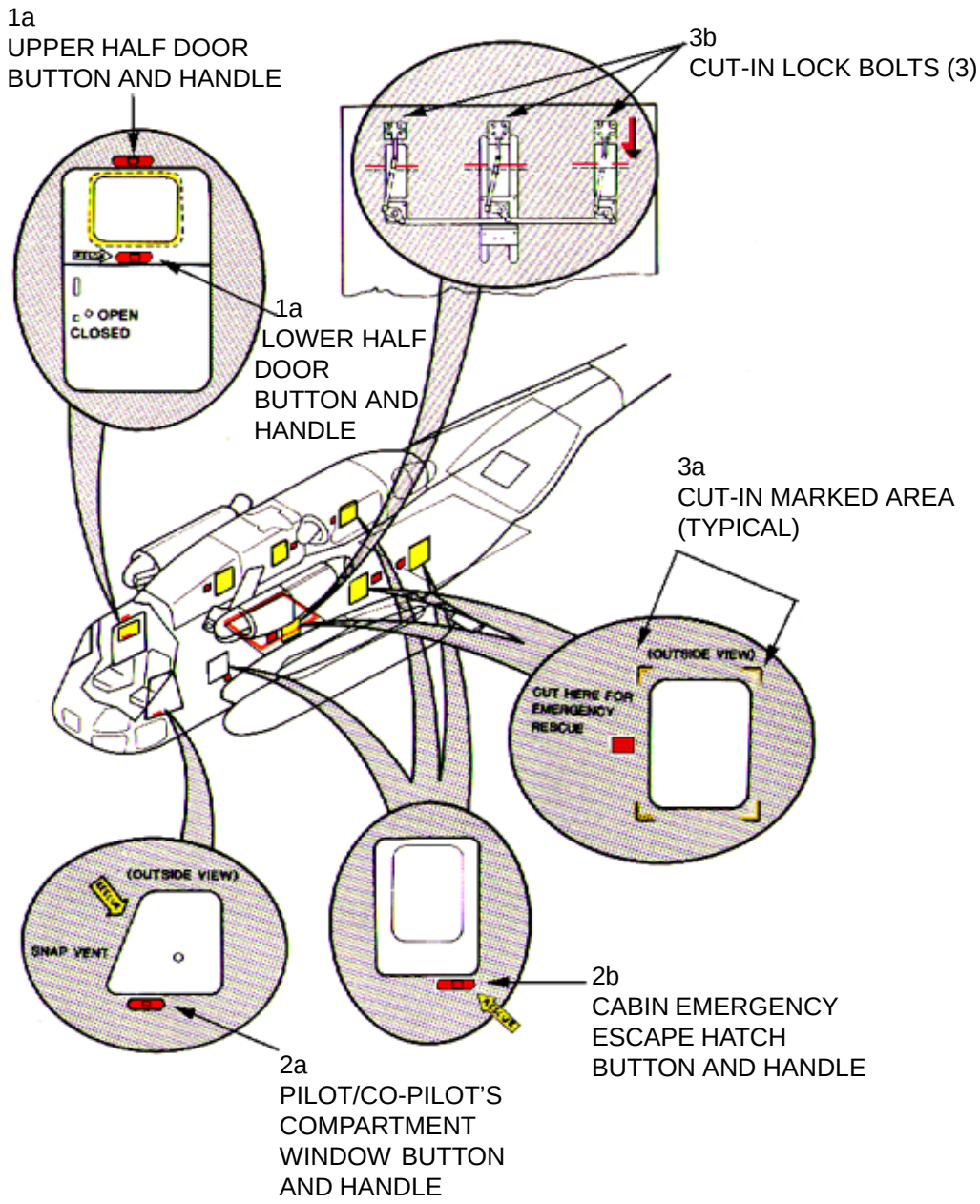

ENGINE AND APP SHUTDOWN

1. ENGINE SHUTDOWN

a. Pull engine speed control levers, located on overhead panel, down and fully aft to SHUT OFF position.

b. Pull engine emergency T-handles, located on overhead panel, fully aft to close fuel valves.

2. APP SHUTDOWN

a. Pull auxiliary powe plant (APP) control lever, located on overhead panel, fully aft if system is operating.

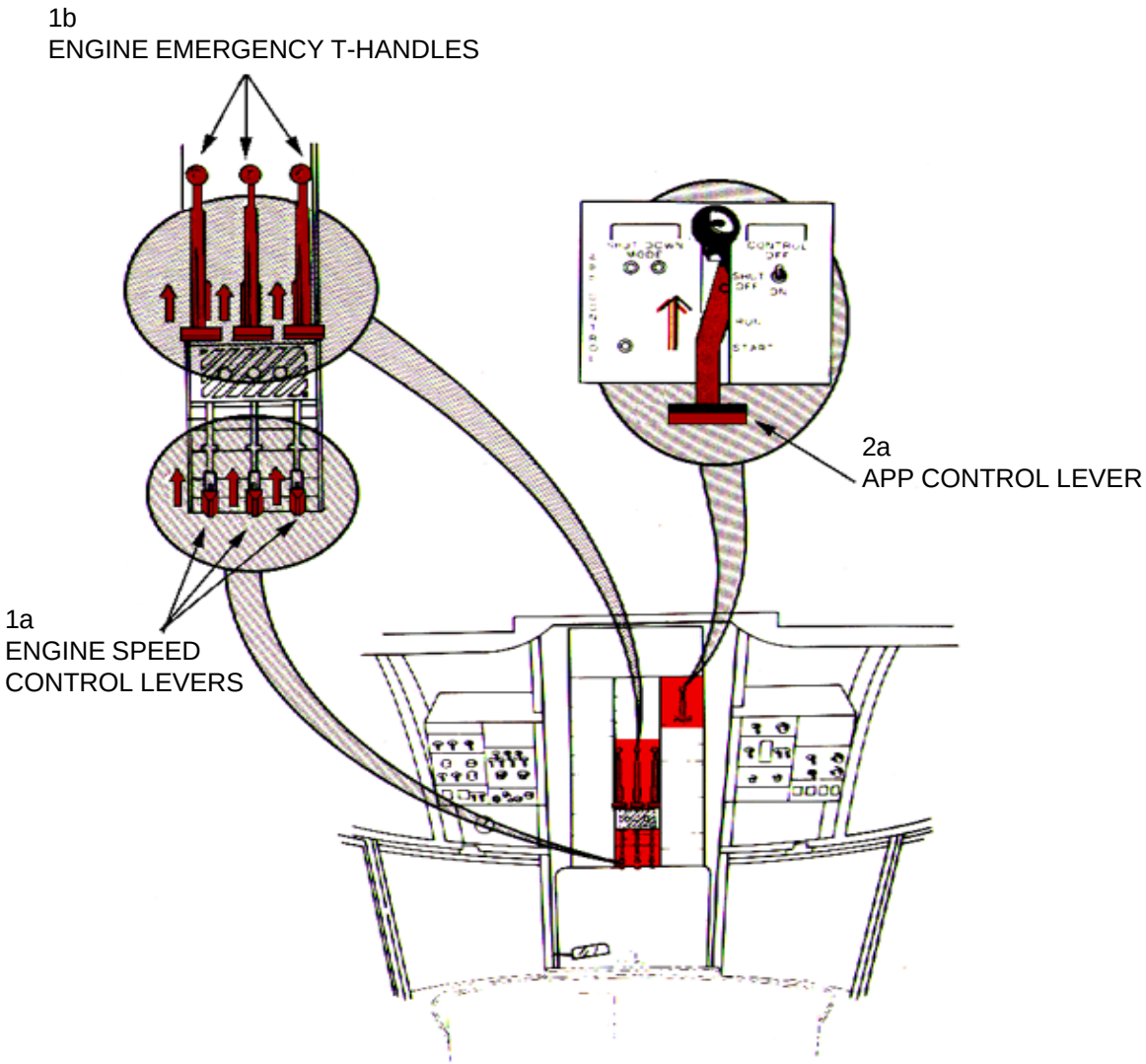

AIRCREW EXTRACTION

1. AIRCREW EXTRACTION

NOTE:
The pilot and co-pilot are attached to the seats by shoulder harnesses secured to the lap belt equipped with a quick disconnect buckle. Troop/passenger seats have lap belts only.

a. Lift quick disconnect lever to release shoulder harnesses and lap belt for crewmembers.

b. Lift buckle cover to release lap belt from troops/passengers. These are airline types.

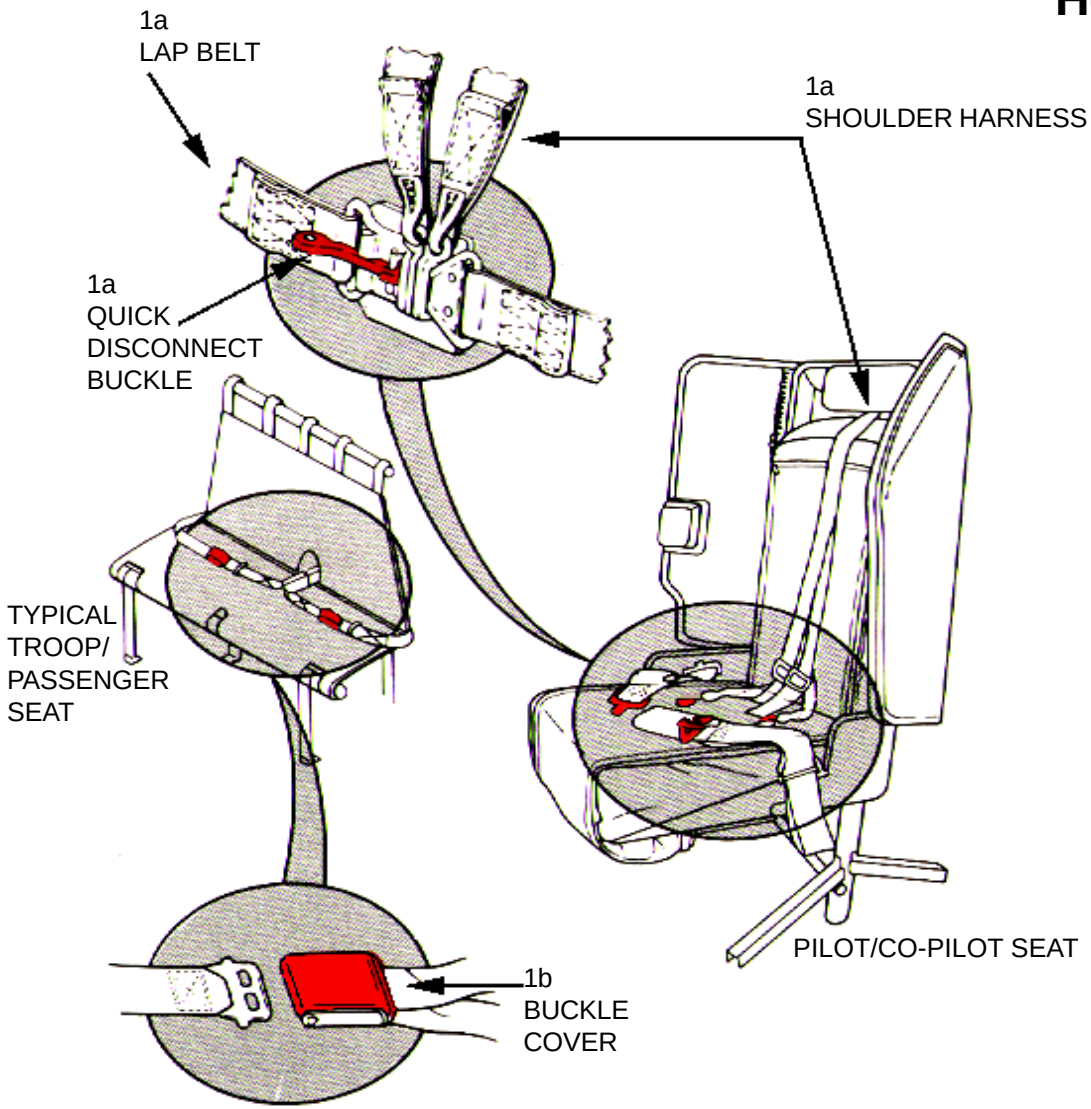

AIRCRAFT PAINT SCHEME

UH/SH-3H

VERSIONS AND USAGES:
H-3 and Sikorsky S-61— Basic Model
VH-3D (HC-2) — Executive Transport
UH-3H (HC-85/PMRF/VC-8) — Utility and Torpedo recovery
SH-3H (HS-75) — Carrier-based ASW* (replaced by SH-60F) and Utility until 2010
UH-3H (HC-2/Naval Air Stations) — Logistics/Search & Rescue

NATO VERSIONS AND USES FOR ASW*:
Westand Sea King HAS Mk 2, 5, 6
Augusta/Westland Merlin HM Mk1
Sea King HC4/MK-4/Westand SAR**
Sea King HAR
*ASW: Anti-Submarine Warfare **SAR Search and Rescue

AIRCRAFT DIMENSIONS AND SPECIFICATIONS

UH/SH-3H

Propulsion: Two General Electric T58-GE-402 turboshaft engines
Weight: 11, 865 lbs. (5,339 kg) empty
Maximum Takeoff Weight: 21,000 pounds (9,450 kg)
Range: 542 nautical miles (623.3 statute miles, 997 km.)
Ceiling: 14,700 feet (4,410 meters)
Cruising Speed: 120 kts (138 miles per hour(217.6 km))
Crew: Four
Date Deployed: First flight, March 1959; Operational, June 1961

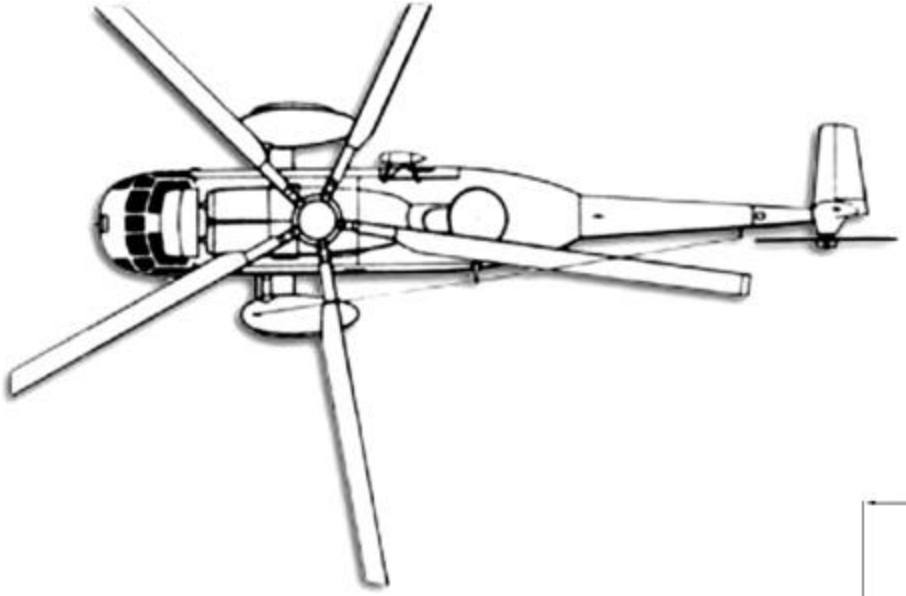

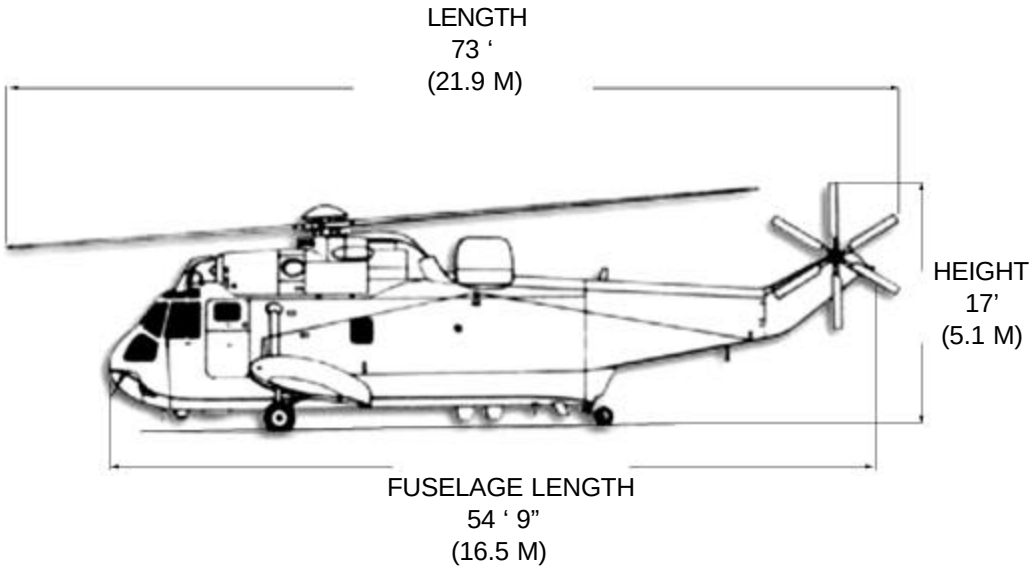

AIRCRAFT SKIN PENETRATION POINTS

UH/SH-3H

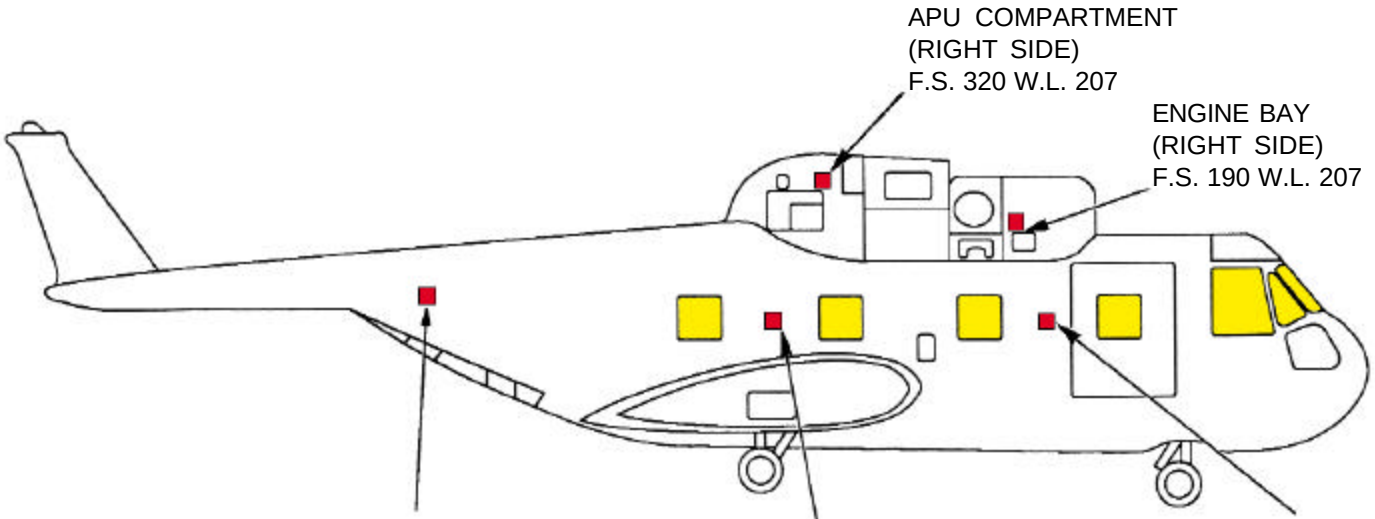

NOTE:
Directly above ammunition storage and aft of the M-60 machine gun.

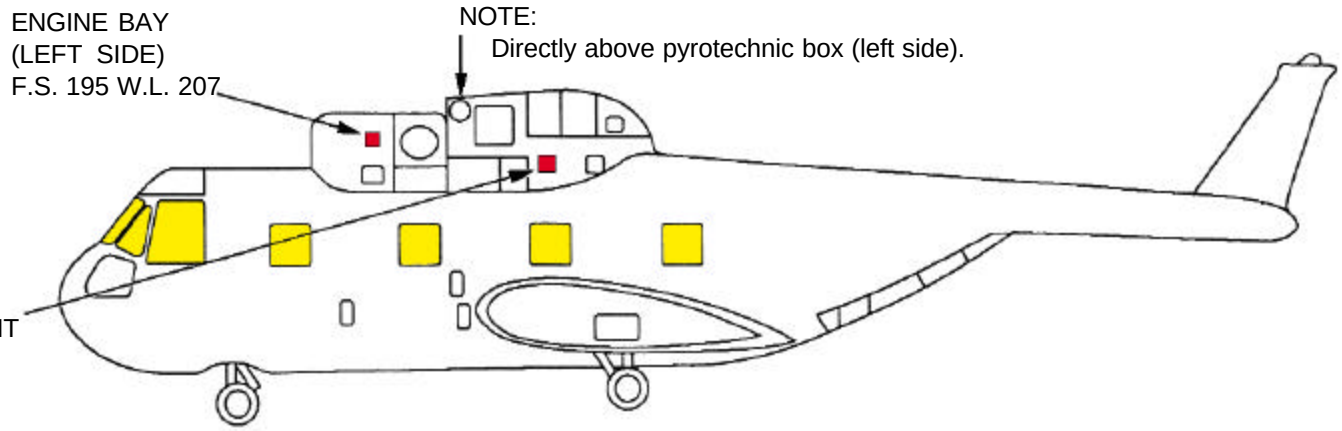

NOTE:
Penetrating the APU compartment also provides access to the oil cooler and the aft main gear box.

AIRCRAFT HAZARDS

UH/SH-3H

- STARTER/TURBINE DISINTEGRATION AREA
- ROTOR BLADE DANGER AREA
- VERY HIGH FREQUENCY FAN NOISE, VIBRATION AND INGESTION
- ENGINE EXHAUST - TEMPERATURE
- GUN MUZZLE AREA - INDICATES AREA WHERE A MAXIMUM DEPRESSION UP OF -30 DEGREES IS ESTABLISHED TO MISS THE EXTERNAL AUXILIARY FUEL TANKS

INLET SUCTION - 4 FEET
ENGINE EXHAUST - 20 FEET

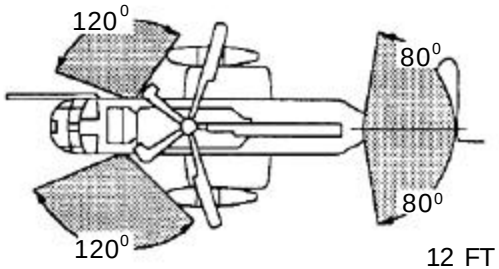

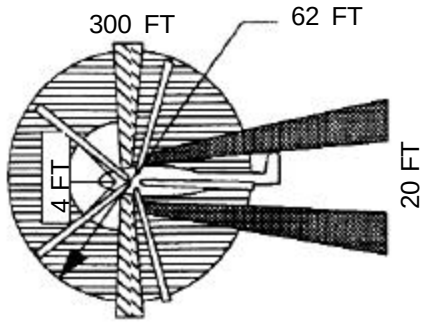

MAIN ROTOR DISC 62 FEET
TAIL ROTOR DISC 10 FEET 6 INCHES

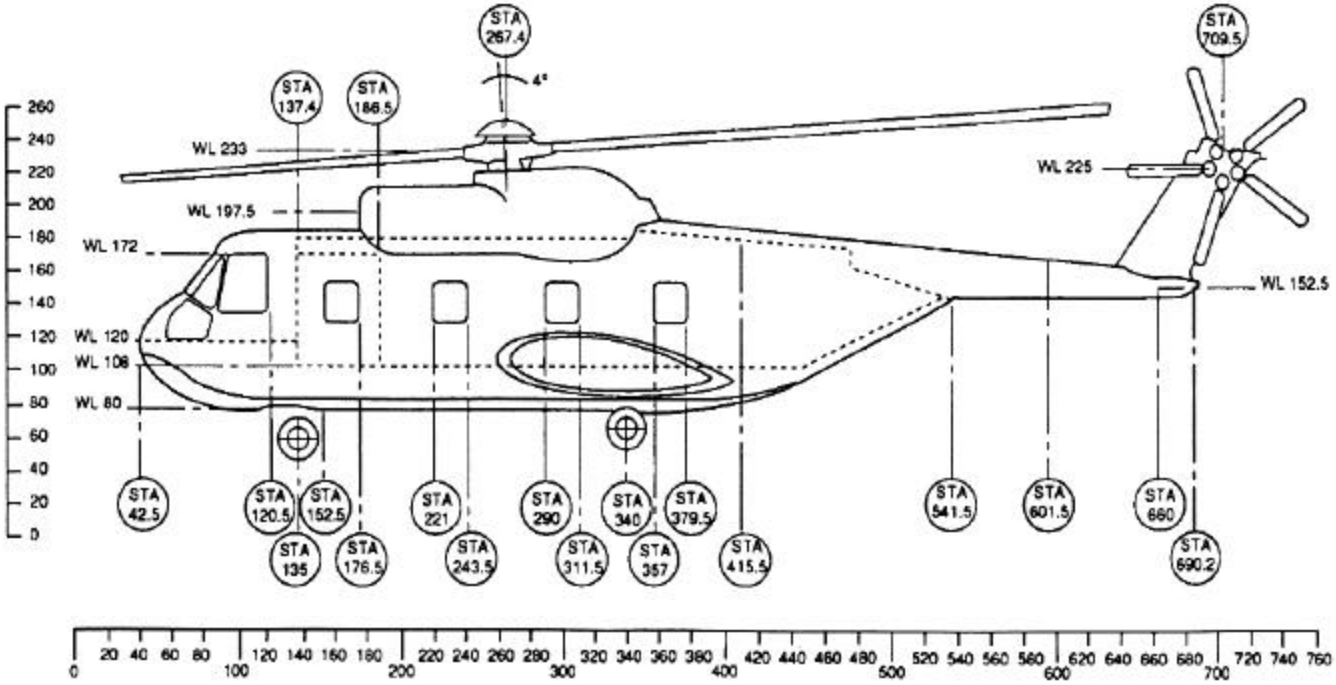

AIRCRAFT HAZARDS-Continued

UH/SH-3H

ARMAMENT:

- Launch Ejector Cartridges
- Sonobuoy Laucher (SH-3H)
- Chaff Dispensers (SH-3H)
- Marine Marker Launcher
- Smoke Marker Launcher System
- 2 MK 46/44 Torpedoes

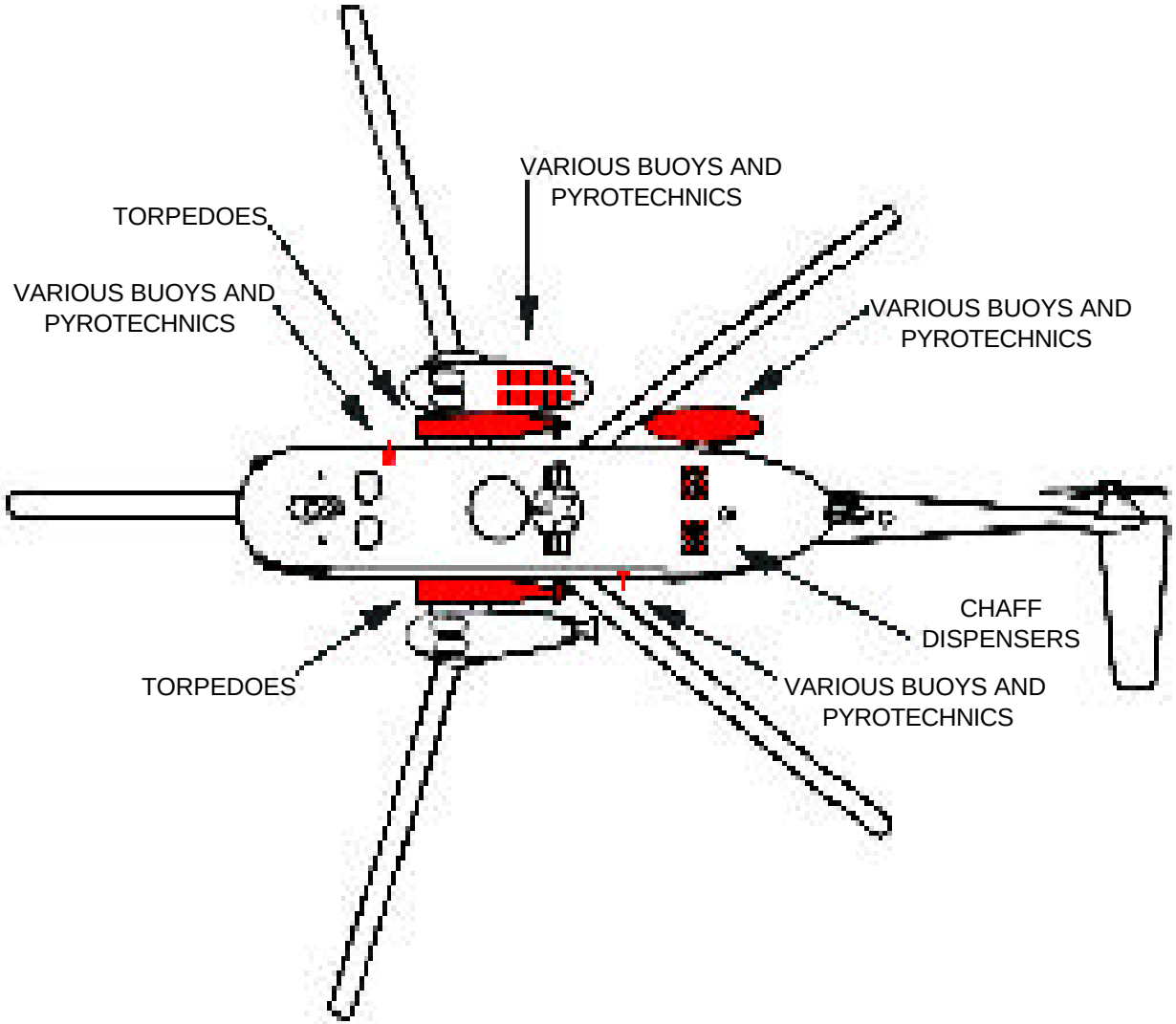

AIRFRAME MATERIALS

UH/SH-3H

- ALUMINUM
- STEEL
- TITANIUM
- OTHER
  FIBERGLASS/MAGNESIUM

NOTE:
Gear boxes are made of magnesium.

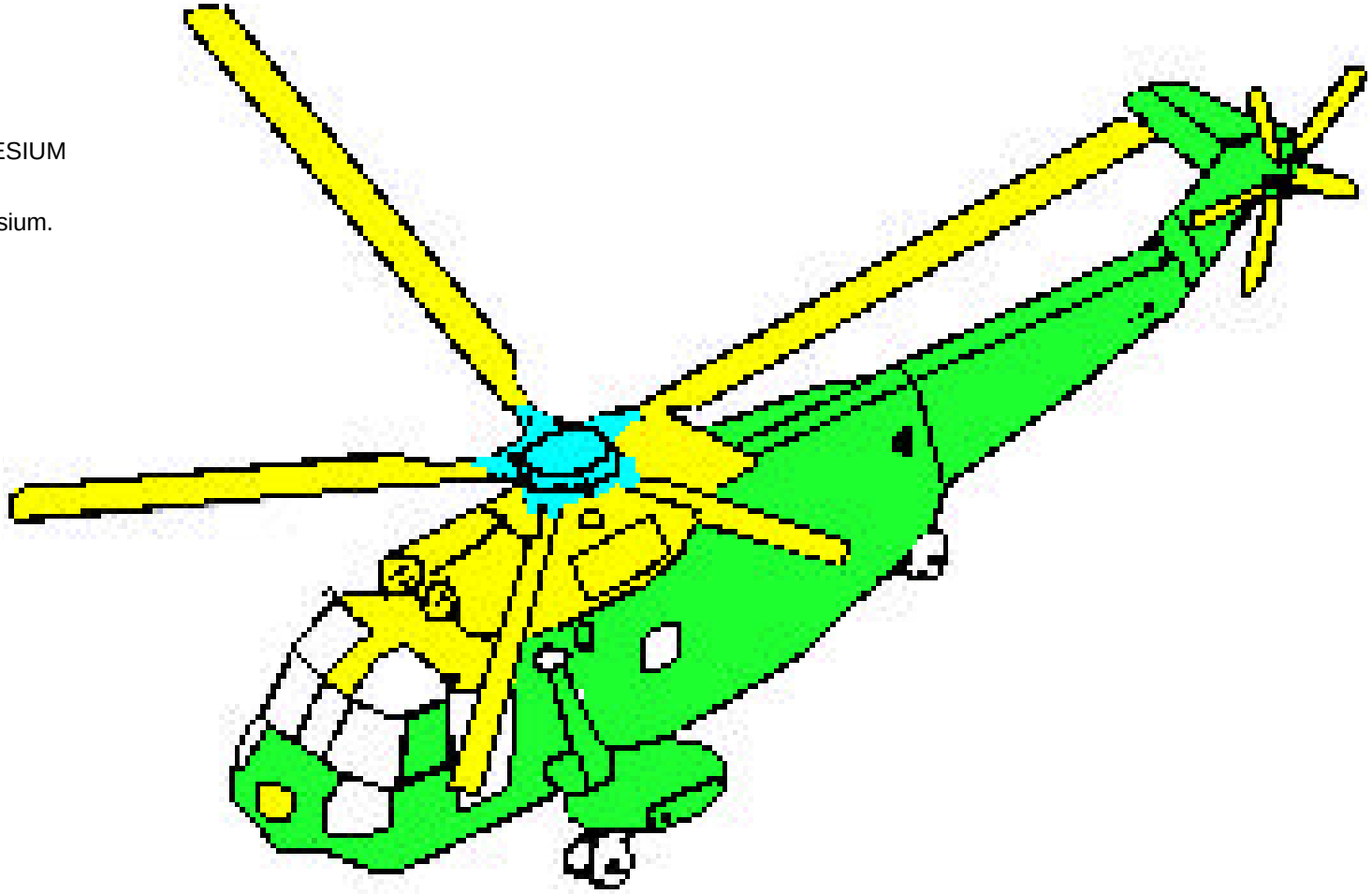

SPECIAL TOOLS/EQUIPMENT
Power Rescue Saw
Fire Drill II

AIRCRAFT ENTRY

1. NORMAL ENTRY

a. Enter through the personnel door on LH side of fuselage. The upper door may be opened at center of door below window by turning handle.

b. To open, push forward part of handle and rotate handle counterclockwise.

NOTE:
On helicopters not modified by AFC No. 301, the upper door handle is located in well at aft bottom of window.

c. The lower door may be opened by rotating handle at center of door. To open, push forward part of handle, rotate counterclockwise and pull door open.

2. EMERGENCY ENTRY

a. For emergency access, cabin windows, cabin doors, and pilot's/copilot's jettisonable windows may be opened from the outside.

b. Cabin windows are equipped with a pull tab at the lower aft corner. To open, pull tab and push panel inward.

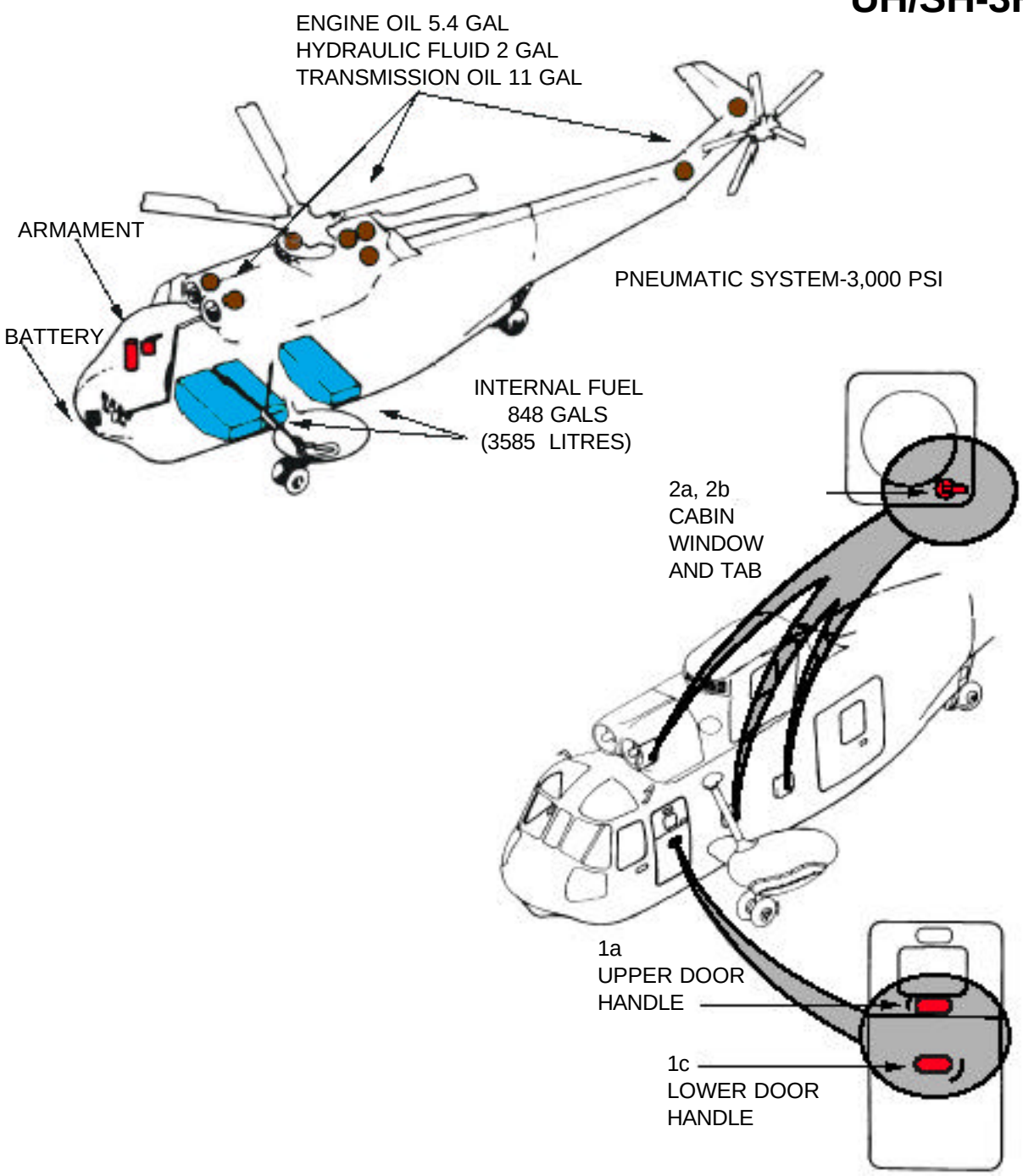

EMERGENCY ENTRY-Continued

2. EMERGENCY ENTRY - Continued

c. To gain access through the window in the cabin door, located on the RT side of the fuselage, rotate handle at lower aft corner, clockwise and pull.

NOTE:
UH-3A has 2 cabin doors, one on each side of fuselage. RH door operates as described in step 1c. LH door, upper section, opens by rotating handle forward.

d. To jettison pilot and copilot windows, press handle to extend, then turn rotate handle counterclockwise and pull window outward.

e. Upper half of personnel door may be removed by rotating handle down.

3. CUT-IN

NOTE:
Windows are made of acrylic plastic and may be cut using a power rescue saw or crash axe. Areas marked on fuselage CUT HERE also may be cut to access.

a. Cut along window frames and marked fuselage entry areas only.

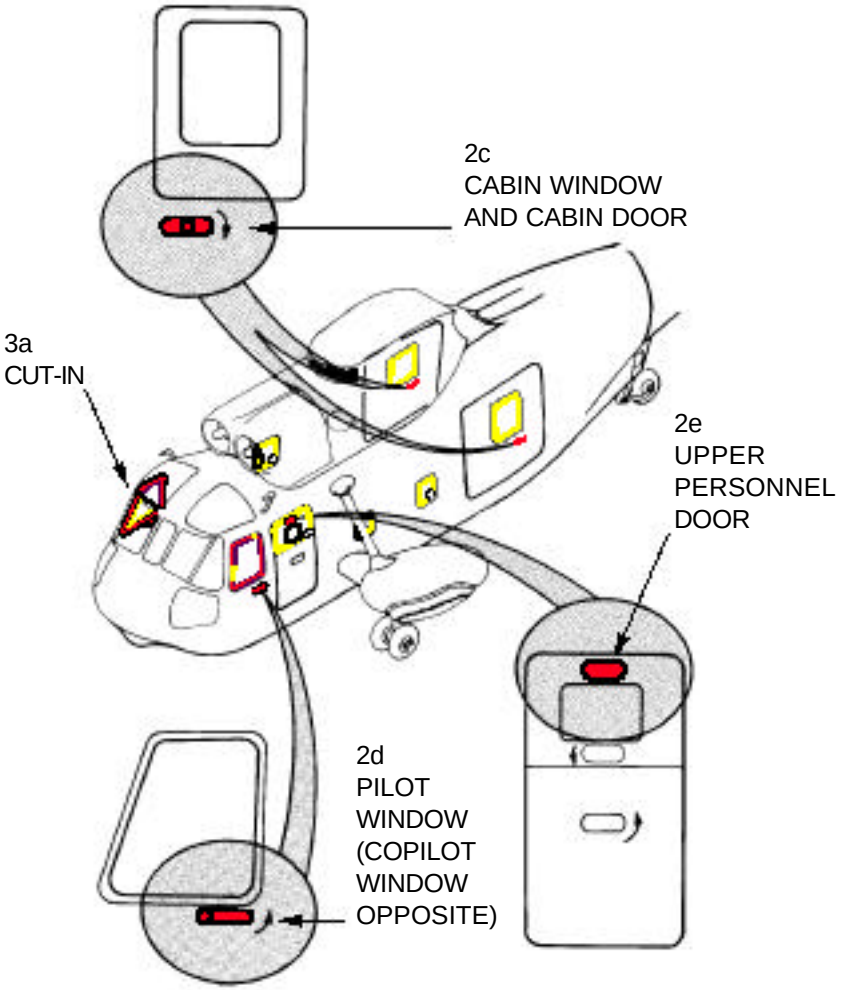

ENGINE SHUTDOWN AND BATTERY DISCONNECT

1. ENGINE SHUTDOWN

NOTE:
Engine may be shut down by engine speed selector levers fuell shutoff handles located on the center overhead control panel.

a. Place selector levers in SHUTOFF position by pulling speed handles aft.

NOTE:
A limit stop or friction control prevents inadvertant retarding of speed selector below ground idle. Pulling speed selector down bypasses this stop.

b. Place battery switch, located on overhead panel, in OFF position.

2. BATTERY DISCONNECT

a. To disconnect battery manually, locate the battery in the forward of the pilot's compartment and is accessible from outside. (See page UH/SH-3H.7)

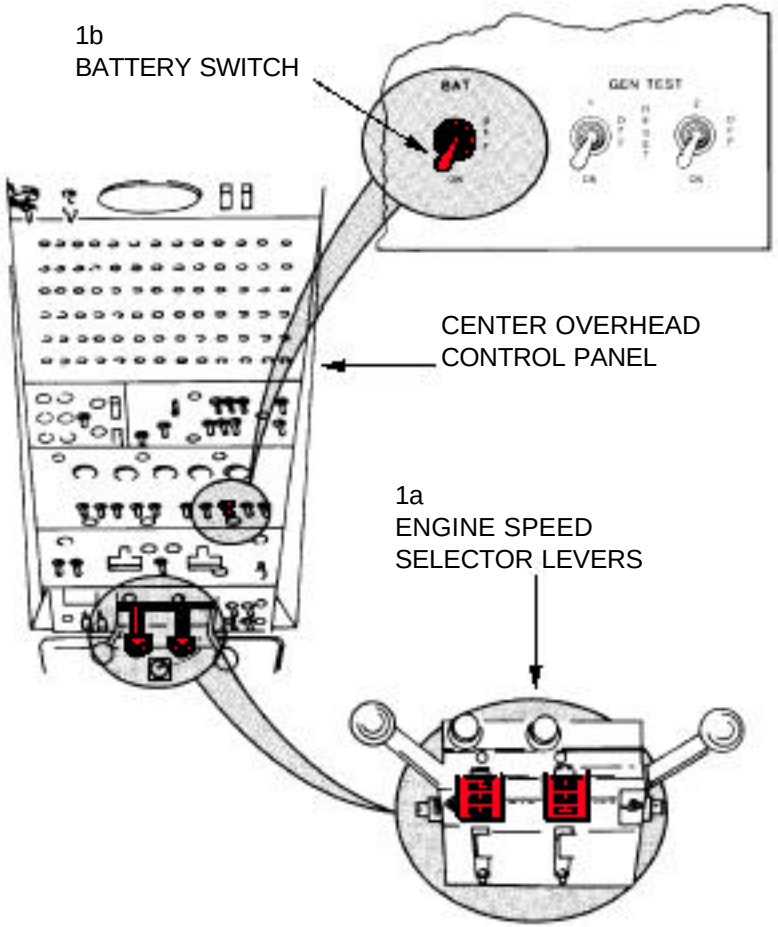

PERSONNEL EXTRACTION

1. AIRCREW EXTRACTION

NOTE:
The pilot, copilot and sensor operators' seats are equipped with shoulder harness and lap belts with a quick disconnect lever.

a. Lift quick disconnect buckle on safety belts and remove shoulder harness from crewmember(s).

2. ATTENDANT, TROOP, PASSENGER OR LITTER EXTRACTION

a. If the aircraft is equipped with litters or configured for attendants, troops or passengers, lift safety belt buckle cover to release safety belt. Belt is an airline type.

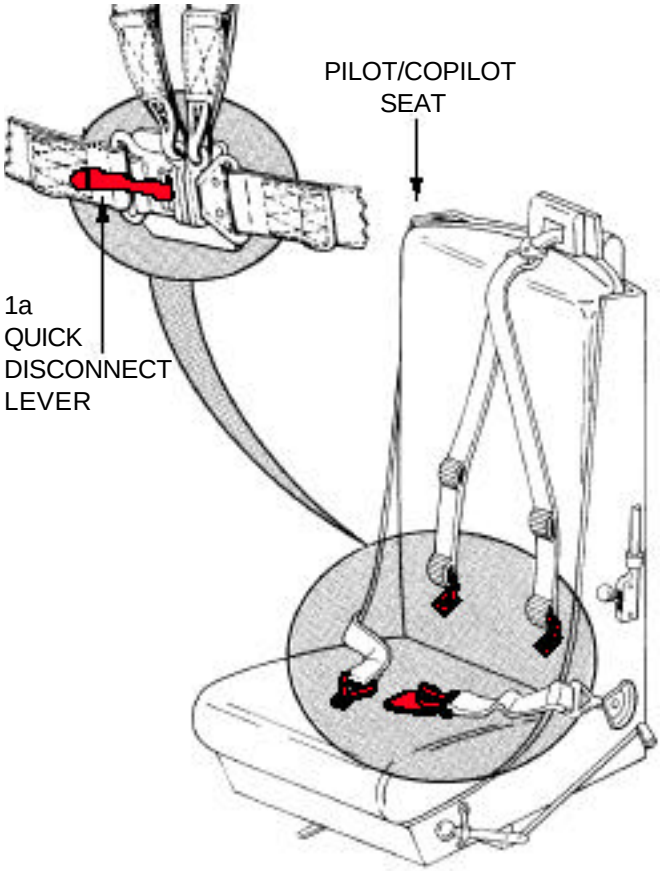

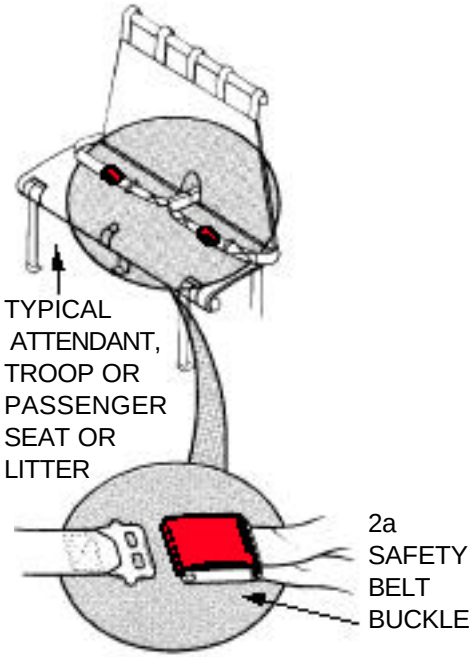

CABIN CONFIGURATION FOR AIRCREW, ATTENDANT, LITTER, TROOP OR PASSENGER EXTRACTIONS

TYPICAL LITTER ARRANGEMENT

TYPICAL 25 PERSONNEL SEAT ARRANGEMENT

AIRCRAFT HAZARDS

WARNING

Tip of rotor blade may drop as low as 4 feet from ground when turning.

ROTOR MINIMUM GROUND CLEARANCE	MAIN	7' 6"
	TAIL	6' 8"
ROTOR DISC DIAMETER	MAIN	53' 8"
	TAIL	11'

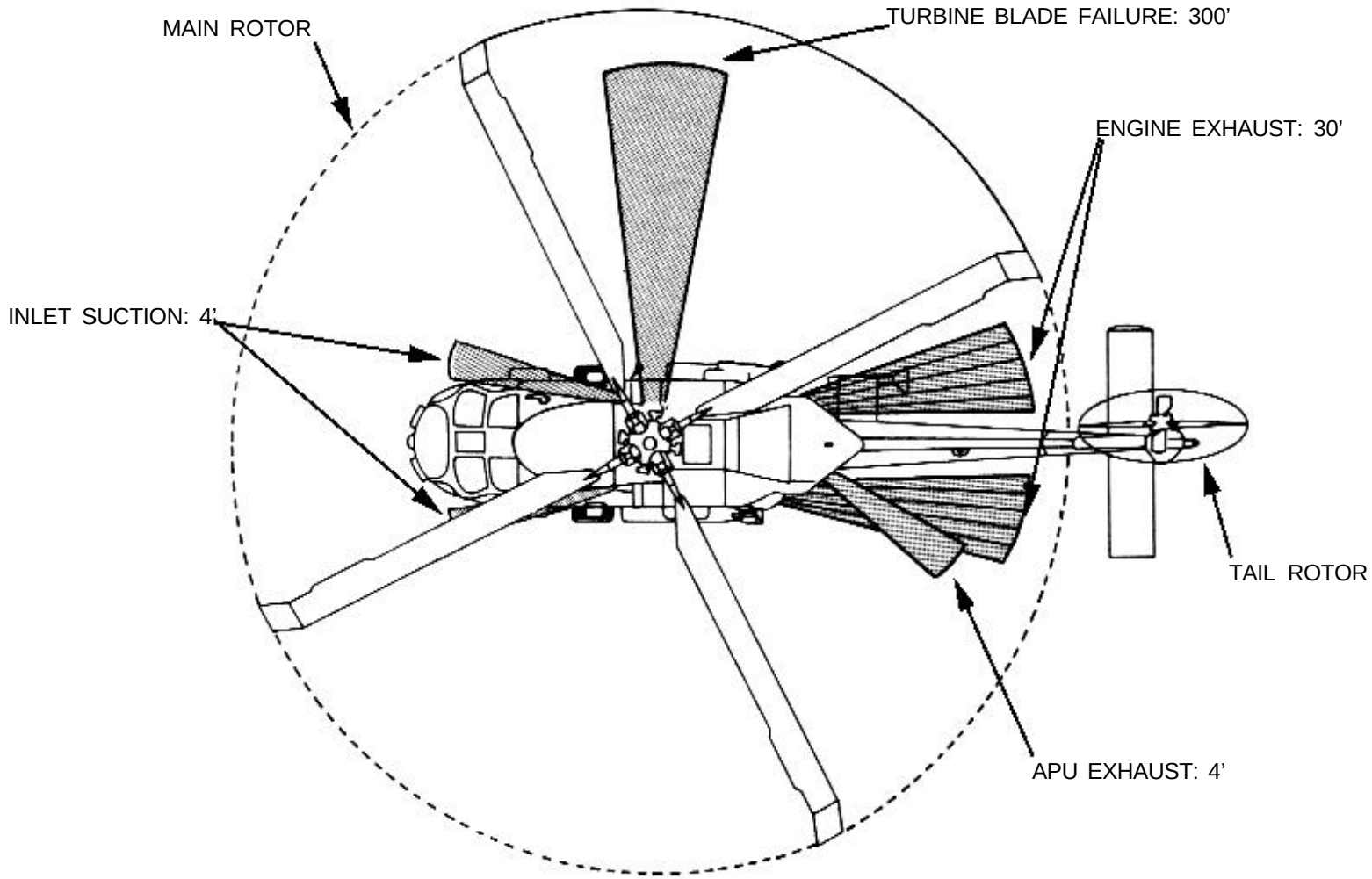

AIRCRAFT HAZARDS-Continued

ARMAMENT:
TORPEDOES (N/A FOR HH-60H/J)
SONOBUOY LAUNCHER
SMOKE MARKERS (PYROTECHNICS)
MK-25 MLM
MK-58 MLM
MK-84 SUS

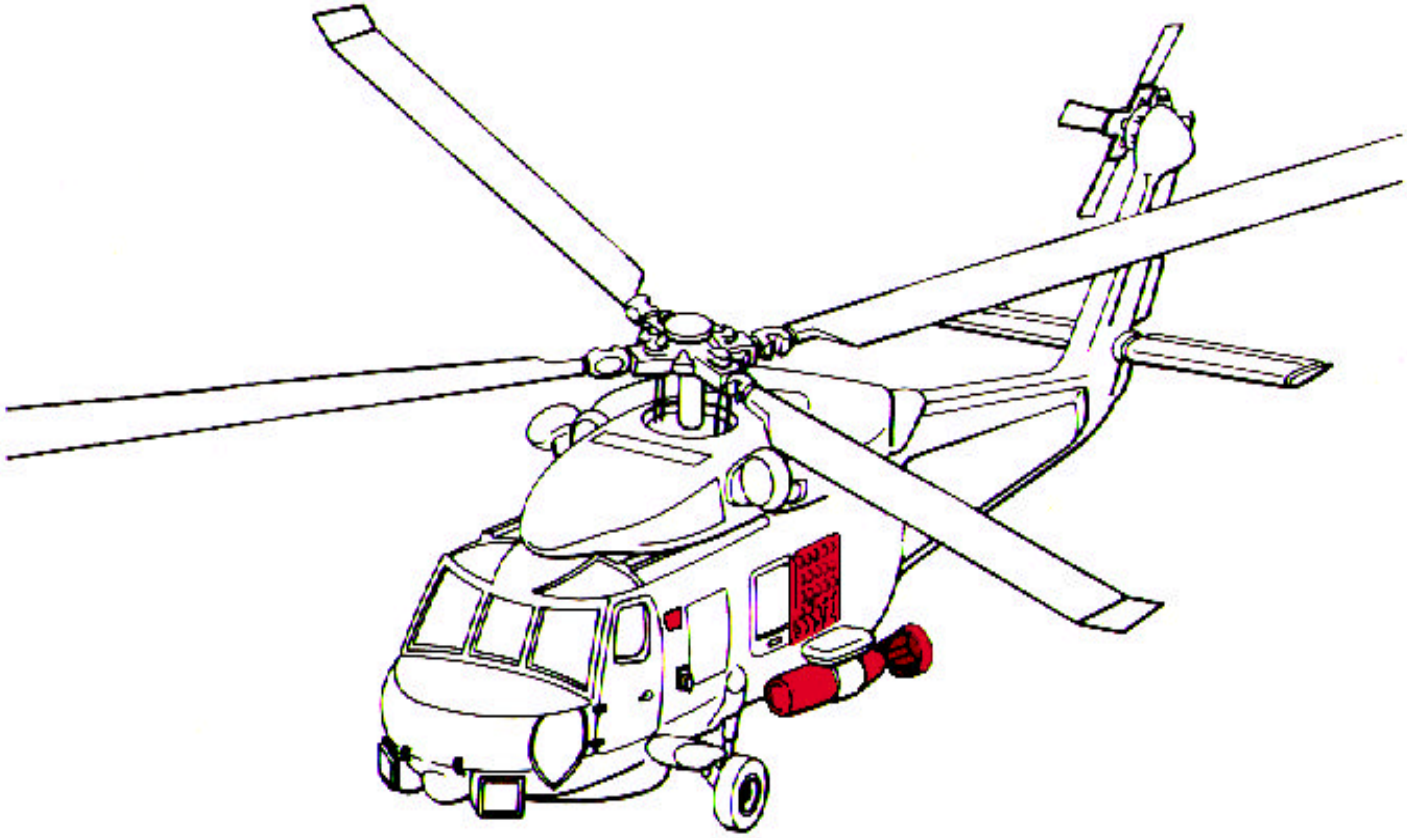

AIRFRAME MATERIALS

HH-60H/SH-60

LEGEND

- ALUMINUM
- STEEL
- TITANIUM
- GRAPHITE EPOXY
- OTHER
  FIBERGLASS/MAGNESIUM/KEVLAR

SPECIAL TOOLS/EQUIPMENT
Power Rescue Saw
Crash Ax
Fire Drill II

NOTE:
Pneumatic system is 3000 PSI.

AIRCRAFT ENTRY

1. NORMAL ENTRY

a. Enter the pilot/ATO area through hinged door on each side of cockpit. Pull handle down to open.

b. A sliding door on right side of fuselage provides access to the cabin. Push to release handle and turn down to open.

2. EMERGENCY ENTRY

a. The pilot and ATO windows, cabin door window and cabin window may be jettisoned by operating the emergency release handle and pulling window out.

3. CUT-IN/FORCED ENTRY

a. If main entrances are jammed or inoperable, cut around pilot, ATO, and SO windows with power rescue saw or crash ax.

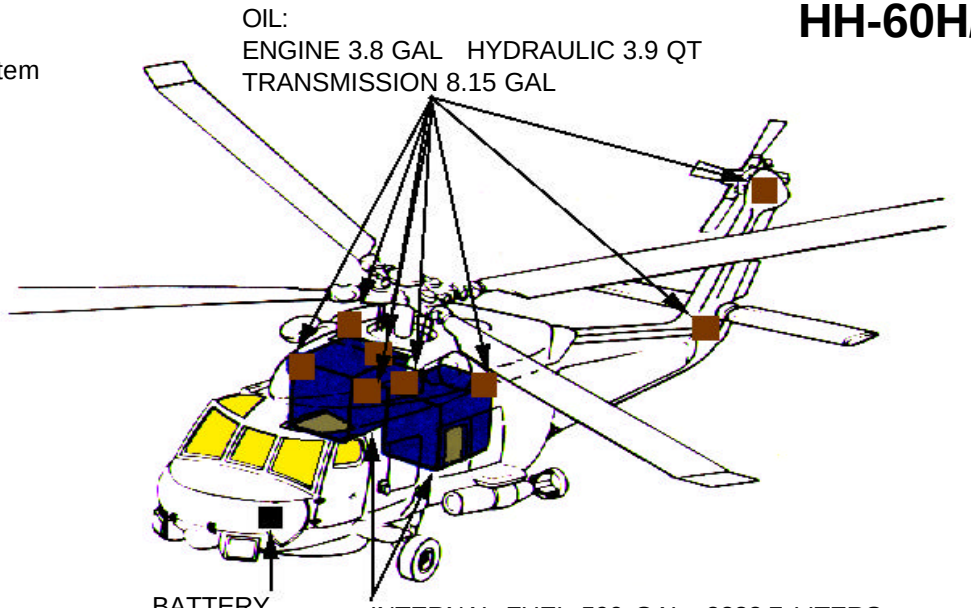

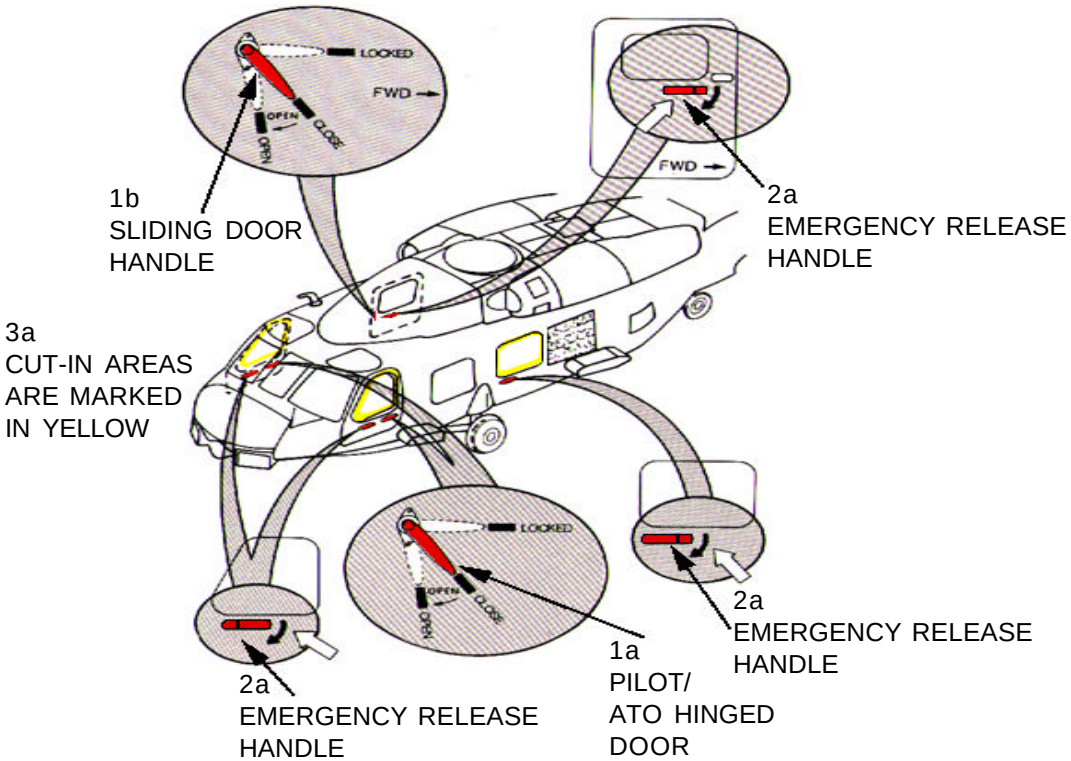

ENGINE, APU SHUTDOWN AND BATTERY DISCONNECT

1. ENGINE SHUTDOWN

a. Pull both engine emergency T-handles, located on overhead panel, aft to OFF position.

b. Place battery switch, located on overhead panel, in OFF position.

2. APU SHUTDOWN

a. Pull APU fire extinguisher T-handle, located on overhead panel. (Required if APU is operating.)

3. BATTERY DISCONNECT

a. To further deactivate the electrical system, disconnect battery quick disconnect fitting. Battery is located in ATO seat well.

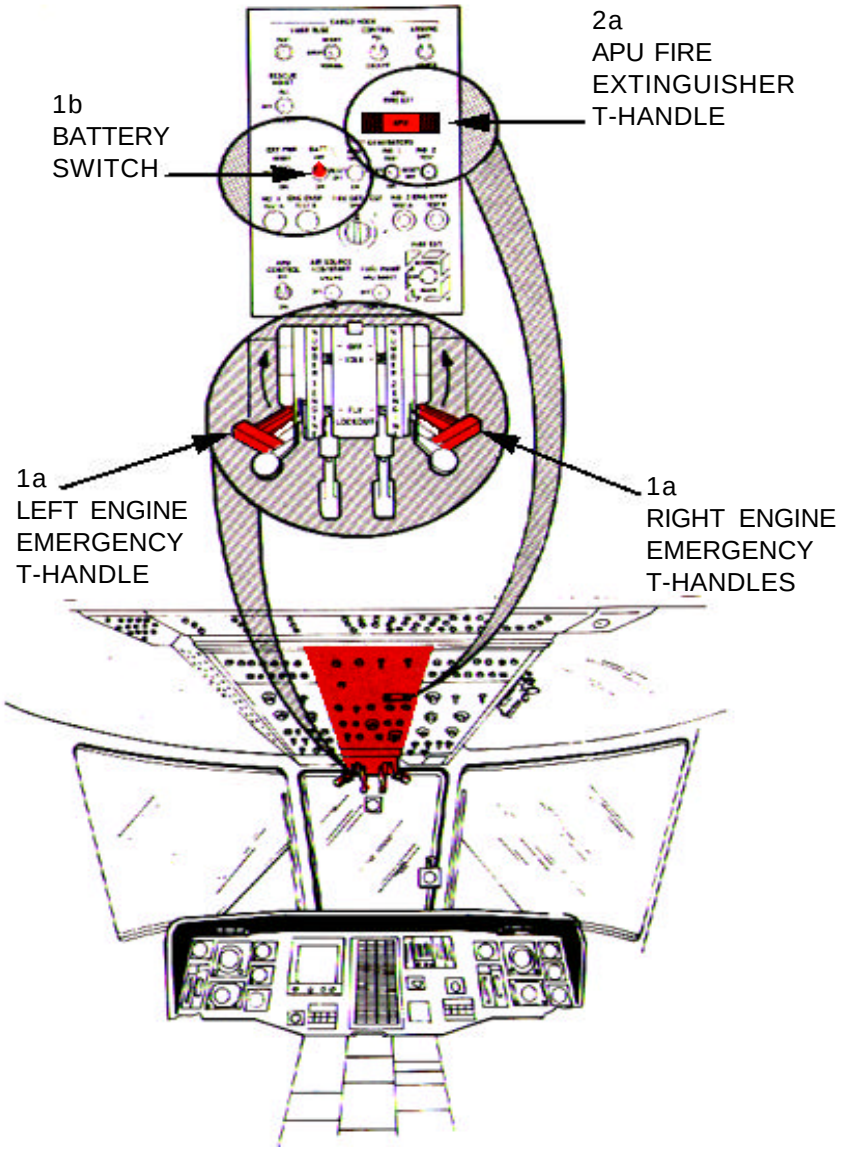

AIRCREW EXTRACTION

1. AIRCREW EXTRACTION

NOTE:
The pilot, co-pilot, crewman, and instructor/ passenger are attached to the seats by a complete lap belt and dual torso-restraint shoulder harness attached to a rotary release buckle.

a. Rotate rotary release buckle in either direction, to release shoulder harnesses and lap belt.

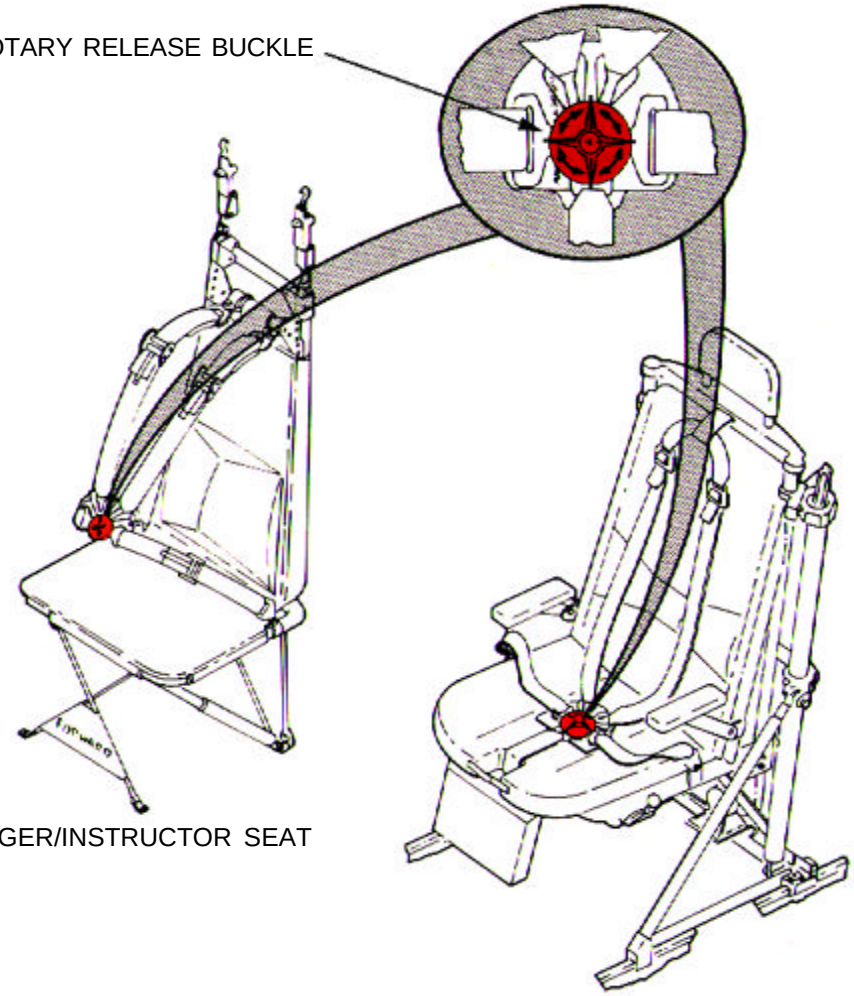

AIRCRAFT HAZARDS

ROTOR MINIMUM GROUND CLEARANCE	MAIN	6’ 5”
	TAIL	1’ 7”
ROTOR DISC DIAMETER	MAIN	33’ 4”
	TAIL	5’ 5”

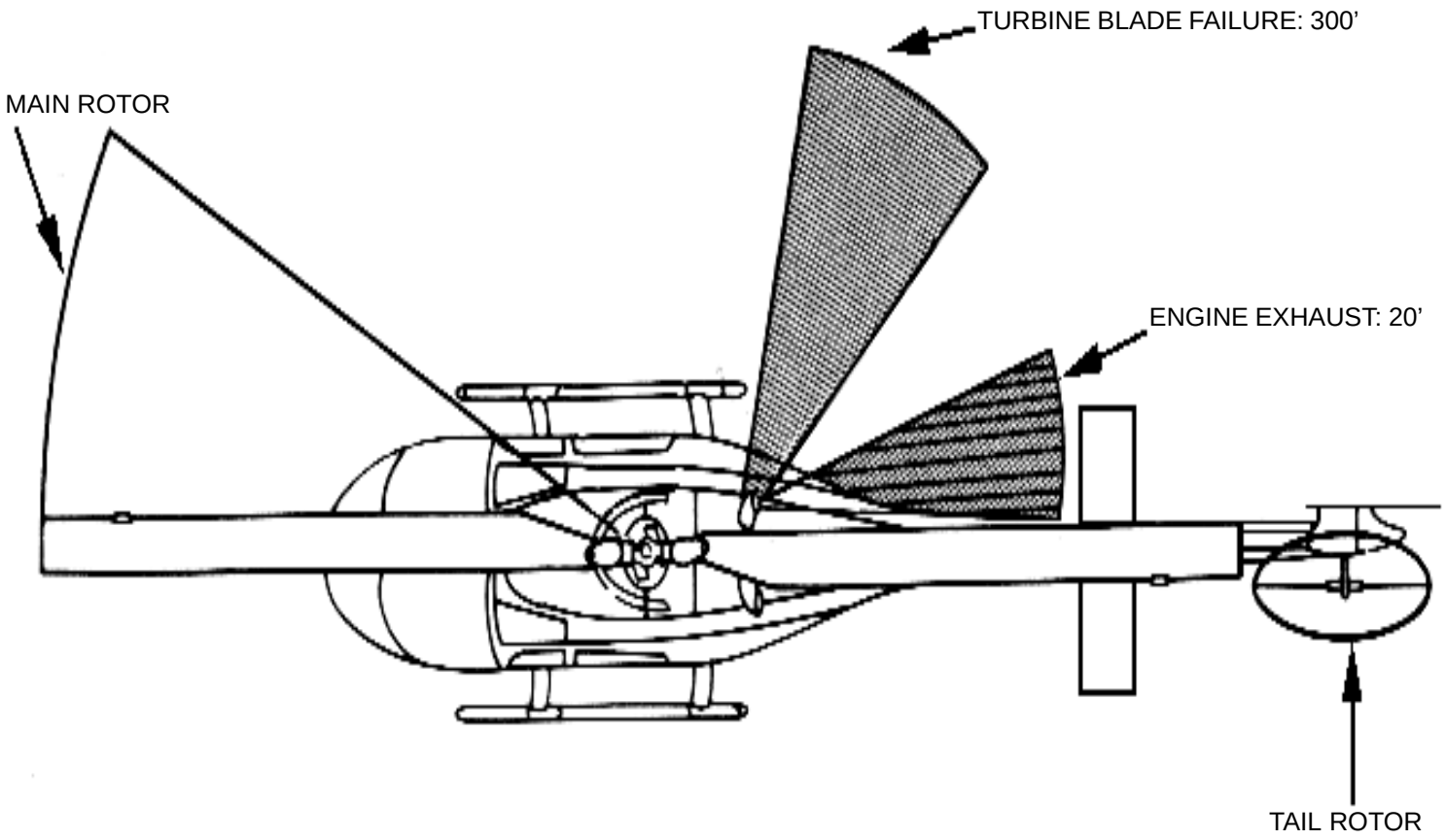

AIRFRAME MATERIALS

LEGEND

- ALUMINUM
- STEEL
- TITANIUM
- OTHER: FIBERGLASS

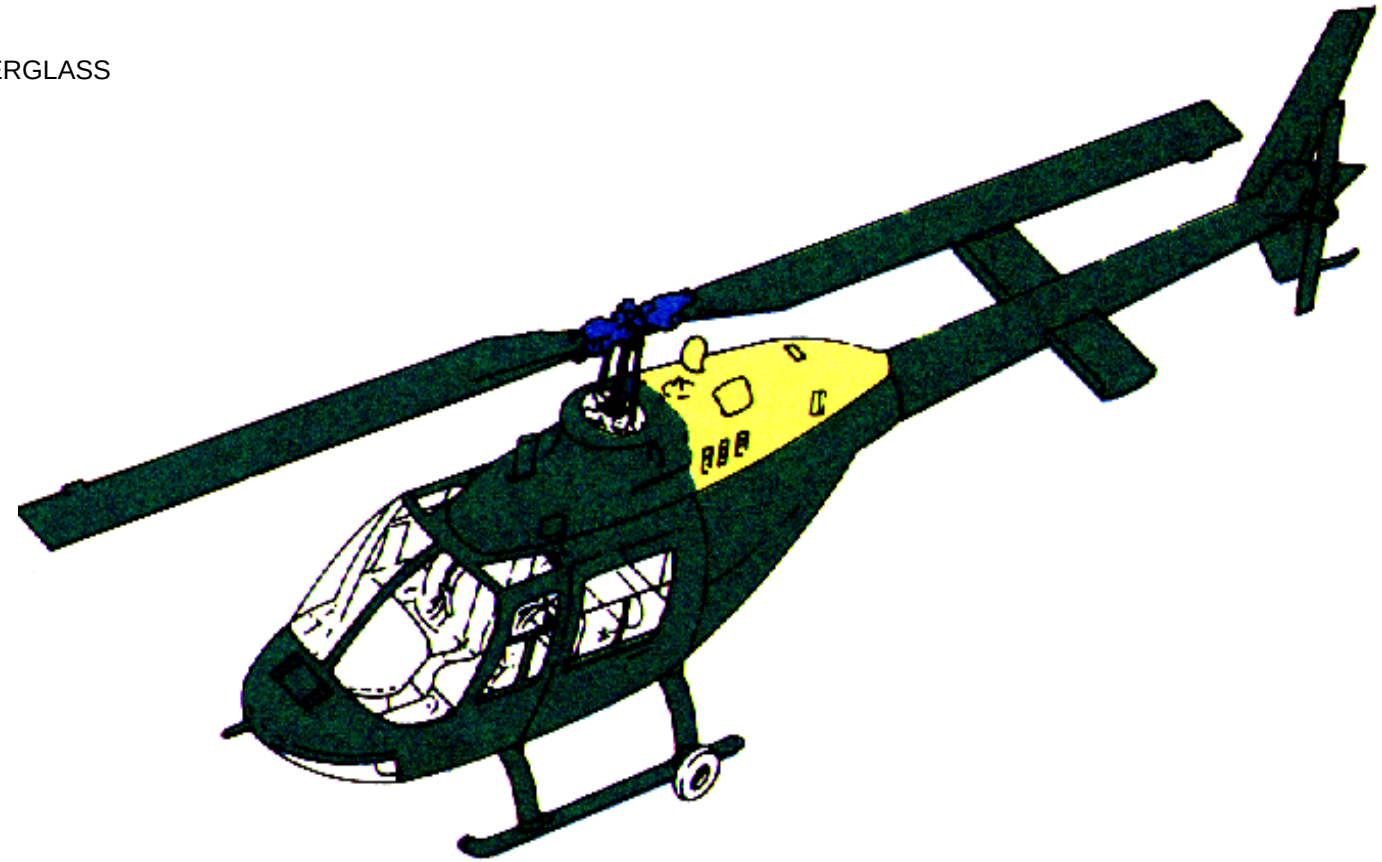

SPECIAL TOOLS/EQUIPMENT
Power Rescue Saw
Crash Ax

NOTE:
Pneumatic system is 650 PSI.

AIRCRAFT ENTRY

1.NORMAL ENTRY

a. The cockpit and cabin door on both sides of the aircraft are used for normal entry. Pull door handle out and push door open.

2. EMERGENCY ENTRY

a. Access to the jettison handles from the outside can be gained by breaking the plexiglass windows, reaching in and pulling the jettison handles.

NOTE:
The jettison handles are installed on the TH-57C aircraft only.

3. CUT-IN/FORCED ENTRY

a. Windows are made of acrylic plastic and may be cut with power rescue saw or crash ax. Cut along window frames.

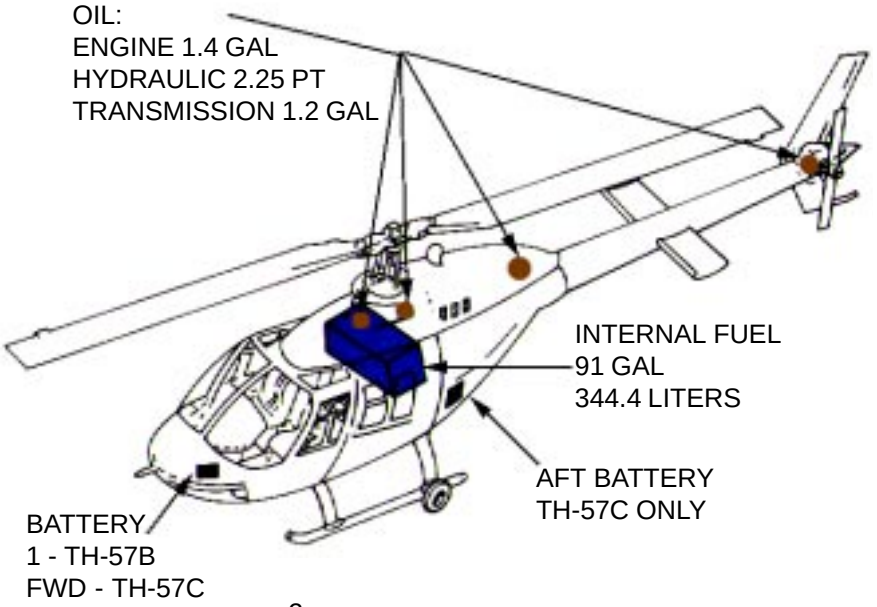

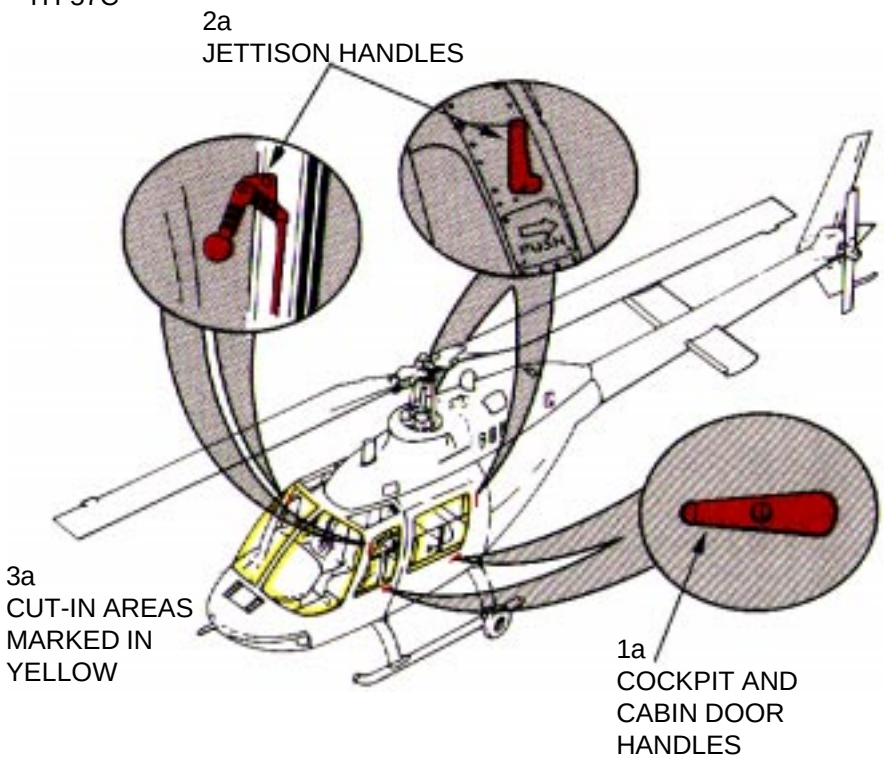

ENGINE SHUTDOWN AND BATTERY DISCONNECT

1. ENGINE SHUTDOWN - TH-57B AND TH-57C

a. Rotate throttle twist grip, located between forward seats, counterclockwise. Depress idle rel button and continue to rotate to SHUTOFF/STOP position.

b. Place the TH-57B fuel valve switch, located on right side of pedestal instrument panel, in the OFF position.

OR

c. Place the TH-57C fuel valve switch, located on the right forward instrument panel, in OFF position.

d. Place the TH-57B battery switch, located on the forward center overhead console first row second switch on right, in the OFF position.

OR

e. Place the TH-57C battery switch and standby battery switch, located on the forward center overhead console first row second and fourth switches, in the OFF position.

2. BATTERY DISCONNECT

a. The forward battery is located in the nose section, accessible through a hinged door. The aft battery in the TH-57C is located in the aft portion of the baggage compartment, accessible through the baggage door on the left side of the aircraft. Disconnect either battery by disconnecting the terminal fittings.

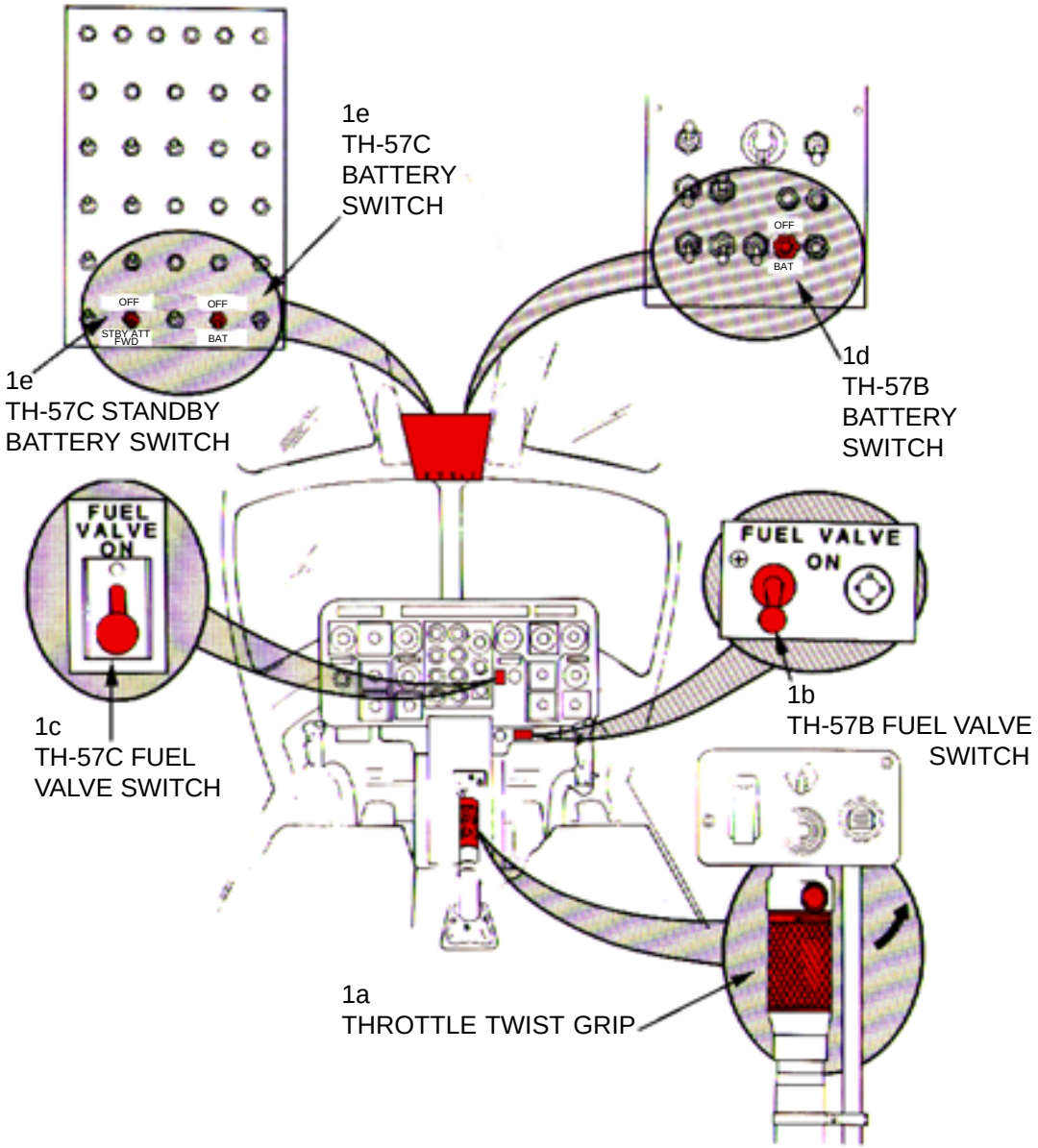

AIRCREW EXTRACTION

1. AIRCREW EXTRACTION

NOTE:
The pilot and co-pilot are attached to the seats with shoulder harnesses and a lap belt equipped with a quick disconnect buckle. Passengers and crew-members have a lap belt and a fixed shoulder harness.

a. Lift quick disconnect lever to release shoulder harnesses and lap belt for the pilot and co-pilot.

b. Lift buckle cover to release lap belt (airline type) and fixed shoulder harness for the passengers and crewmembers.

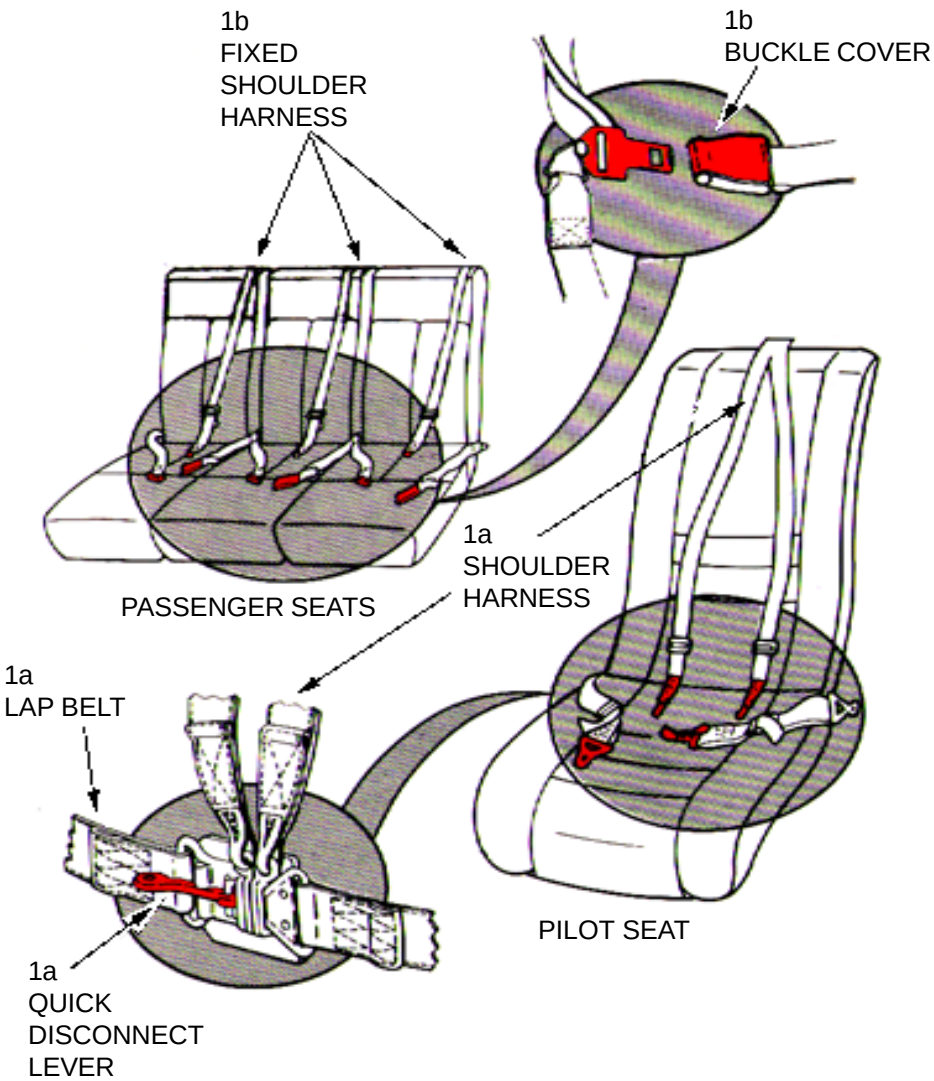

AIRCRAFT HAZARDS

NOTE:

The US Navy UH-1N is the same as the USAF UH-1N. Refer to Chapter 9, pages UH-1N.1 thru UH-1N.3. For additional procedures see US Army UH-1. Refer to Chapter 13, pages UH-1.1 thru UH-1.3.

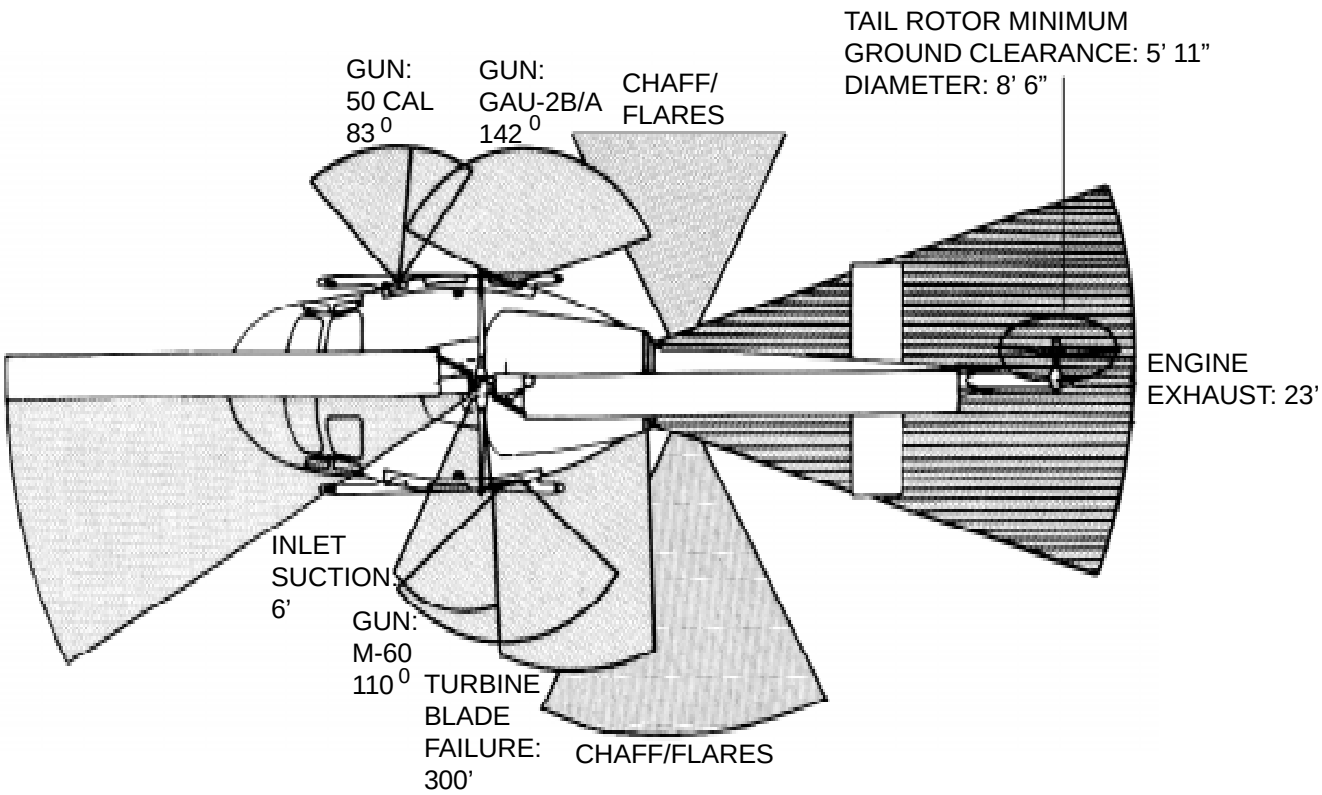

MAIN ROTOR MINIMUM
GROUND CLEARANCE: 7' 2"
DIAMETER: 48'

WARNING

Rotor blade may flap or dip down as low as 5 feet.

AIRFRAME MATERIALS

LEGEND

- ALUMINUM
- STEEL
- OTHER
  FIBERGLASS

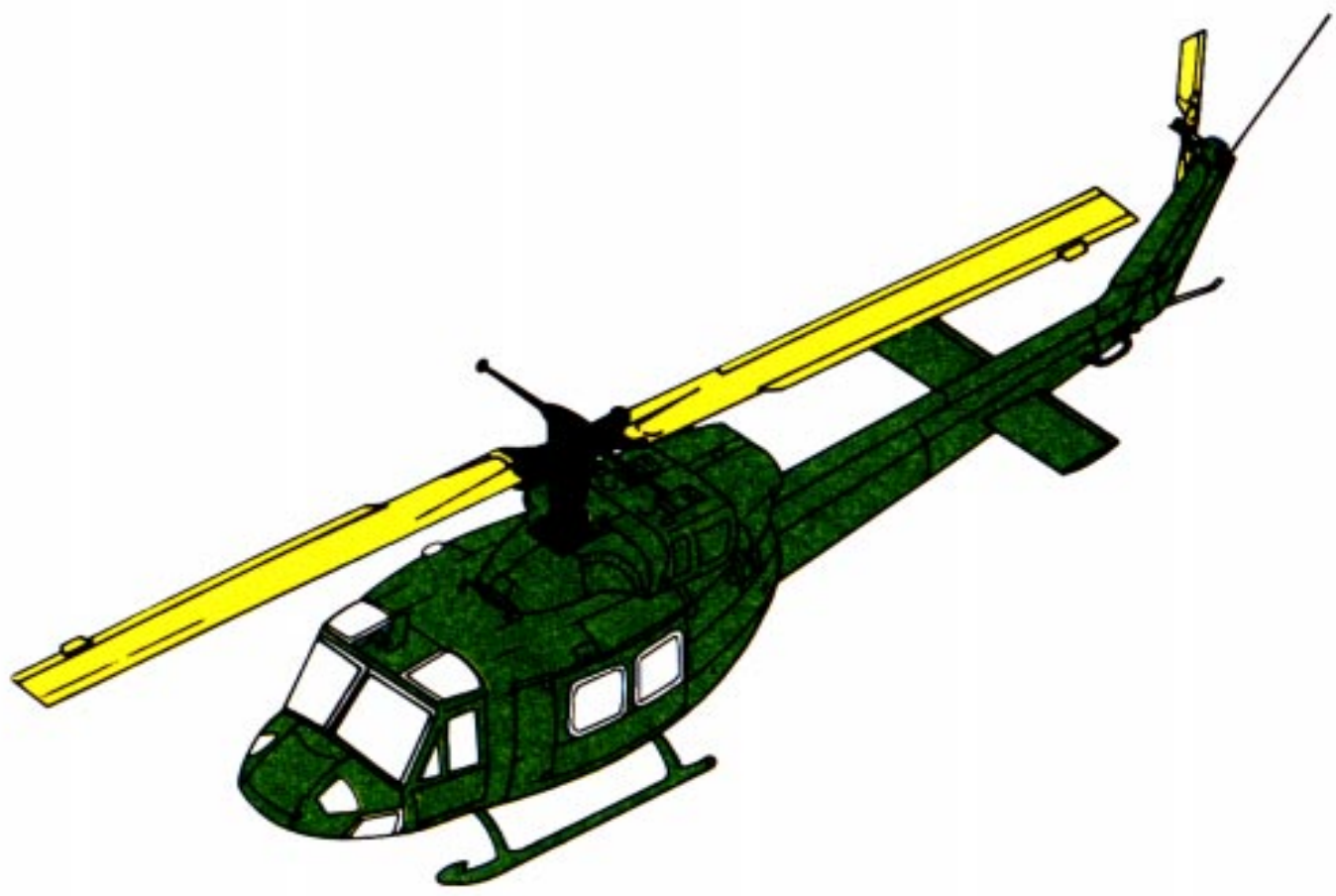

SPECIAL TOOLS/EQUIPMENT
Power Rescue Saw
Crash Ax

AIRCRAFT ENTRY

1. NORMAL ENTRY

a. Rotate crew door handles (both sides), located forward of passenger doors, then pull out and forward to open doors.

b. Rotate passenger cargo door handles (both sides), located aft of crew doors, down and slide doors aft to open.

2. EMERGENCY ENTRY

a. If the pilot/co-pilot crew exits are jammed and access cannot be gained through the passenger's exits, slide or break the pilot or co-pilot windows, reach forward and pull jettisonable door release.

b. If the doors do not jettison, break the windshield or any other windows to gain entrance.

3. CUT-IN/FORCED ENTRY

a. Windows are made of acrylic plastic and may be cut using a power rescue saw or crash ax. Cut along window frames.

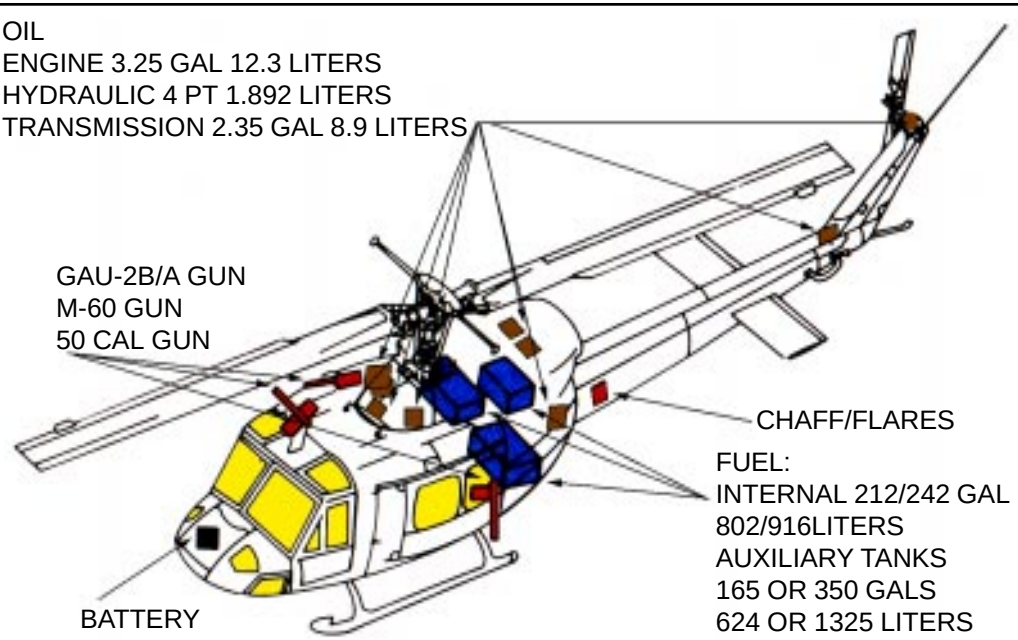

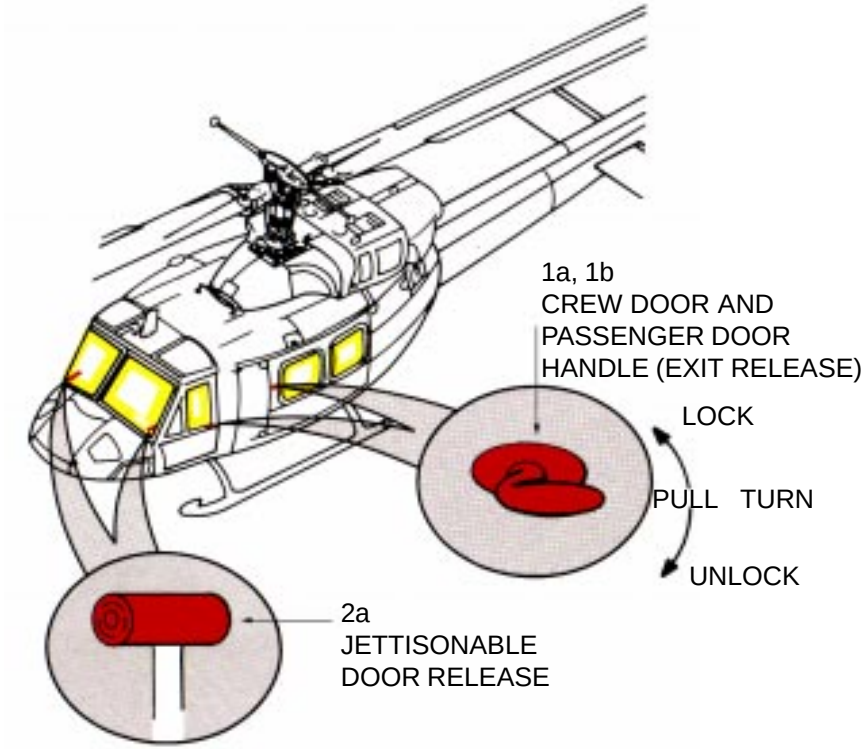

ENGINE SHUTDOWN AND BATTERY DISCONNECT

1. ENGINE SHUTDOWN

a. Center either cycle control stick, located forward of pilot and co-pilot seats, and hold.

b. Push the collective pitch lever, located at co-pilot station, down into down lock.

c. Engage engine #1 idle release stop switch, located on pilot's collective only, then close throttle #1 by twisting grip to right to shut down engine #1. Repeat procedure for shutting down engine #2.

d. Place engine #1, engine #2, and crossfeed fuel control switches in OFF position.

e. Place battery switch, located on co-pilot's overhead panel, in OFF position.

f. Pull down on rotor brake actuator handle, located on co-pilot's overhead center wind-shield area, to position of greatest pressure and hold until rotor stops turning.

2. BATTERY DISCONNECT

a. If battery, located in the nose compartment, requires disconnecting, disconnect if time and access permits.

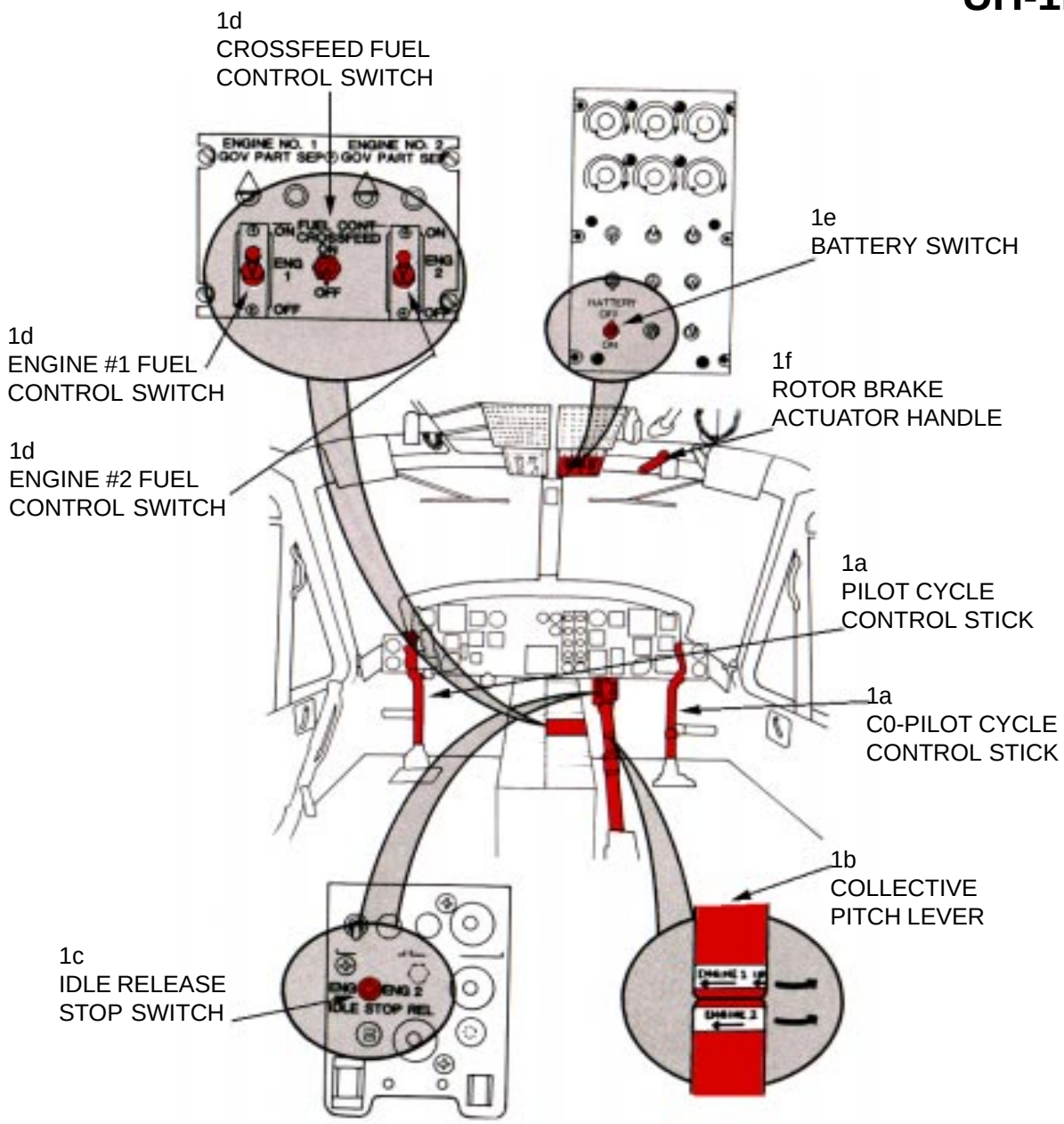

AIRCREW EXTRACTION

1. AIRCREW EXTRACTION

NOTE:

The pilot/co-pilot are attached to the seats by shoulder harnesses secured to a lap belt equipped with a quick disconnect lever. Troop/passengers seats have a lap belt equipped with a quick disconnect buckle cover.

a. Lift quick disconnect lever to release shoulder harnesses and lap belt for pilot and co-pilot.
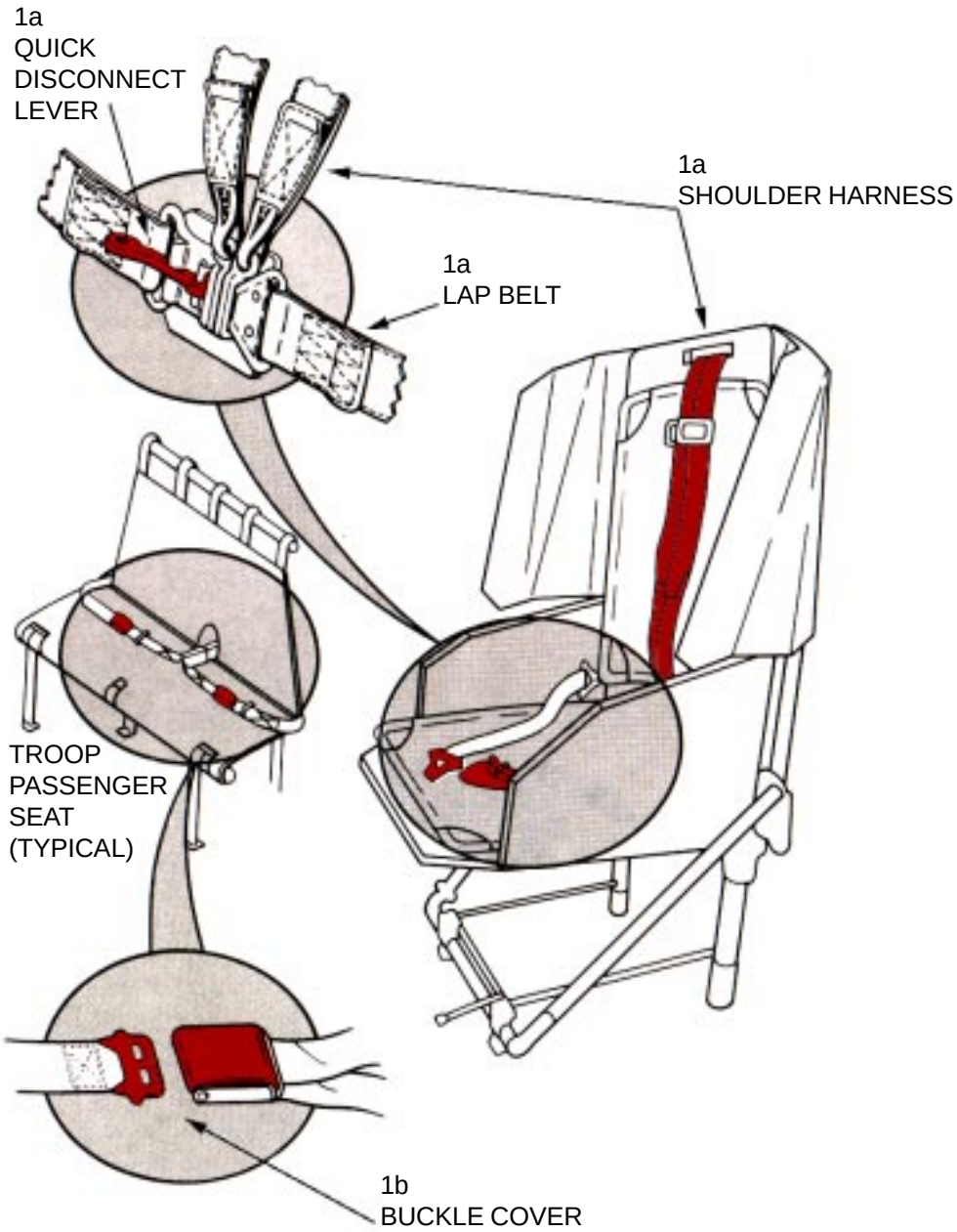
b. Lift buckle cover to release lap belt for troop/passengers. These belts are airline type.