WELCOME TO TECHNICAL ORDER 00-105E-9, 1 JULY 2004, REVISION 9.

THIS IS SEGMENT 8 COVERING CHAPTER 7 from the E-3 30/35 to VC-25A.

TO NAVIGATE

CLICK ON THE BOOKMARKS AND CLICK ON THE (+) SYMBOLS, THEN CLICK ON SUBJECT LINKS TO GO TO SPECIFIC VIEWS IN THIS SEGMENT.

CONTINUE

NOTICE

CONTACT

TO GO DIRECTLY TO THE TECHNICAL ORDER,
CLICK ON THE CONTINUE BUTTON.

TO SEE THE SEGMENT INFORMATION CHANGE NOTICE,
CLICK ON THE NOTICE BUTTON.

TO CONTACT THE TECHNICAL CONTENT MANAGER ,
CLICK ON THE CONTACT BUTTON.

TECHNICAL ORDER 00-105E-9 TECHNICAL CONTENT MANAGER

WRITTEN CORRESPONDENCE:

HQ AFCESA/CEXF
ATTN: Fire and Emergency Services Egress Manager
139 Barnes Drive Suite 1
Tyndall AFB, Florida 32403-5319

E-MAIL: Tom.Stemphoski@tyndall.af.mil

INTERNET: HQ AFCESA Fire and Emergency Services PUBLIC WEB PAGE:
http://www.afcesa.af.mil/CEX/fire/index.asp

PHONE: (850) 283-6150
DSN 523-6150

FAX: (850) 283-6390
DSN 523-6390

For technical order improvements, correcting procedures, and other inquiries, please use the above media most convenient.

SEGMENT 8 INFORMATION CHANGE NOTICE

This page is provided to notifiy the user of any informational changes made to Technical Order 00-105E-9 in this Segment and the current Revision. Informational changes will be referenced in the Adobe Reader's Bookmark tool as a designator symbol illustrated as a <[C]> for quick reference to the right of the affected aircraft. The user shall insure the most current information contained in this TO is used for his operation. Retaining out of date rescue information can negatively affect the user's operability and outcome of emergencies. If the user prints out pages his unit requires, the user shall print the affected page(s), remove and destroy the existing page(s), and insert the newly printed page(s) in the binder provided for that purpose. A Master of this TO shall be retained in the unit's library for reference, future printing requirements and inspections.

CHAPTER	AIRCRAFT	PAGE	EXPLANATION OF CHANGE
7	E-6B	ALL	New paint scheme page and warning added to aircraft entry on page 5. File pages renumbered.

NOTE

Chapter 7 contains emergency rescue and
mishap response information for the following aircraft:

USAF	**E-3 30/35**
USAF	**E-4A/B**
USAF	**E-6B**
USAF	**EA-6B**
USAF	**E-8C**
USAF	**E-9A**
USAF	**VC-25 (AF-1)**
USAF	**YAL-1A**

CHAPTER 7

U.S. AIR FORCE

ELECTRONIC/VC-25(AF-1)

AEROSPACE EMERGENCY RESCUE AND MISHAP RESPONSE INFORMATION

7-1. INTRODUCTION AND USE.

7-2. This section contains emergency rescue and mishap response information illustrations in alphanumerical order relative to type and model of aircraft. This arrangement of illustrations is maintained from Chapter 4 throughout the remainder of the publication.

7-3. GENERAL ARRANGEMENT.

7-4. Aircraft type designation has been positioned in the upper right corner of the horizontal illustration for rapid identification. Additional aids to rapid orientation are:

a. Recent technological advances in aviation have caused concern for the modern firefighter. Aircraft hazards, cabin configurations, airframe materials, and any other information that would be helpful in fighting fires, the locating and rescue of personnel will be added as the information becomes available.

b. Suggested special tools/equipment are listed in the upper left corner, on the Aircraft/Entry page of each listed aircraft.

c. Procedural steps covering emergency/normal entrances, cut-ins, engine/APU shutdown, safetying ejection/escape systems, and aircrew extraction are outlined on the left side of each page with coordinated illustrations on the right.

d. Illustrations located on right side of pages are coordinated with text by numerals and small letters depicting both paragraph and subparagraph on the page.

e. Each illustration is consistently colored and/or pattern keyed to highlight essential emergency rescue information.

f. Details are pulled directly from the illustration to highlight an area, thus eliminating unnecessary searching for desired information.

SKIN PENETRATION POINTS AND DIMENSIONS

NOTE:

Dimensions are along the contour of the aircraft.

NOTE:

Aircraft Dimensions
Length 152’11”
Wing Span 145’9”
Height 42’5”

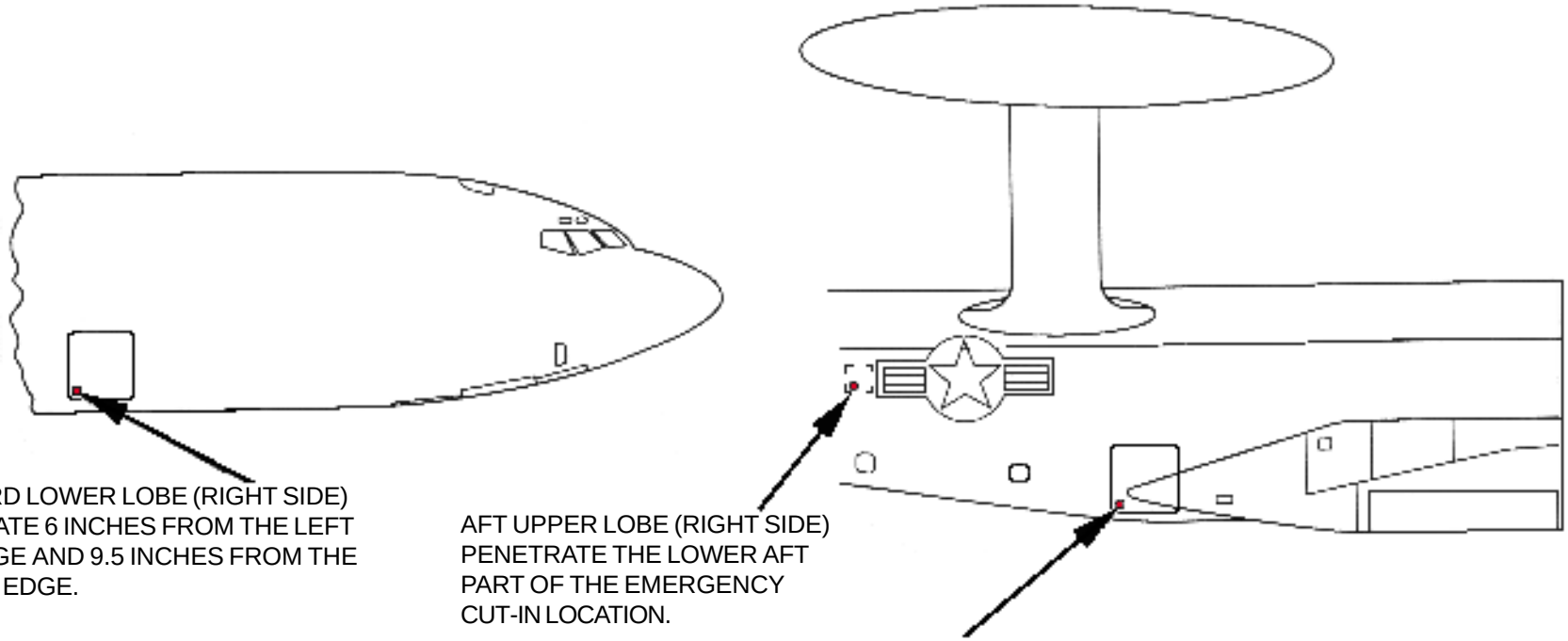

SKIN PENETRATION POINTS-Continued

NOTE:

Dimensions are along the contour of the aircraft.

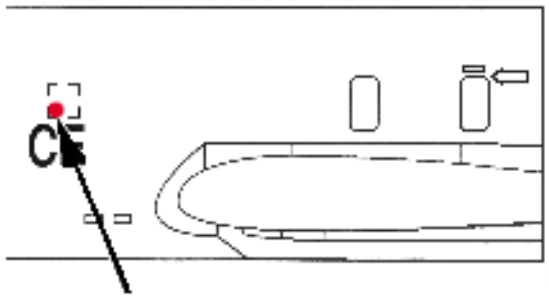

FORWARD UPPER LOBE (LEFT SIDE) PENETRATE 4 INCHES UP FROM THE BOTTOM AND 4.5 INCHES AFT OF THE FORWARD EDGE OF THE EMERGENCY CUT-IN LOCATION.

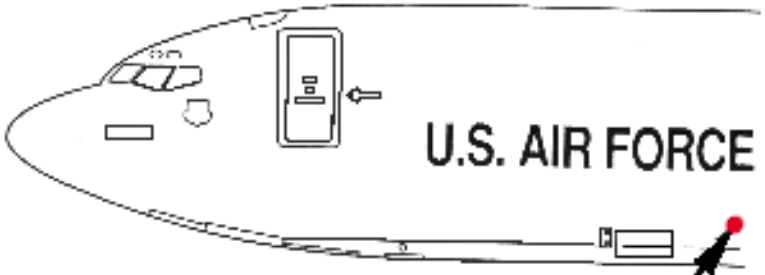

FORWARD LOWER LOBE (LEFT SIDE) PENETRATE 4 INCHES AFT OF F.S. 600 AND 14.75 INCHES BELOW THE SKIN LAP EDGE AT STRINGER 20.

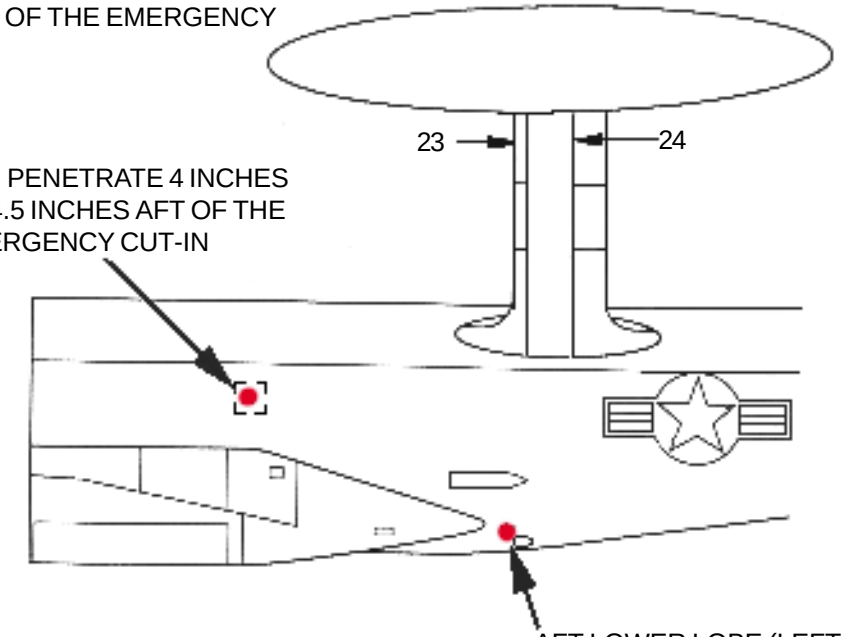

AFT UPPER LOBE (LEFT SIDE) PENETRATE 4 INCHES UP FROM THE BOTTOM AND 4.5 INCHES AFT OF THE FORWARD EDGE OF THE EMERGENCY CUT-IN LOCATION.

AFT LOWER LOBE (LEFT SIDE) PENETRATE 5 INCHES FORWARD OF F.S. 1100 AND DOWN 13.75 INCHES FROM THE SKIN LAP EDGE AT STRINGER 20.

SKIN PENETRATION POINTS-Continued

NOTE:

- Penetration points for the aircraft engines are identical regardless of engine position on the aircraft.
- Dimensions are along the contour of the door.

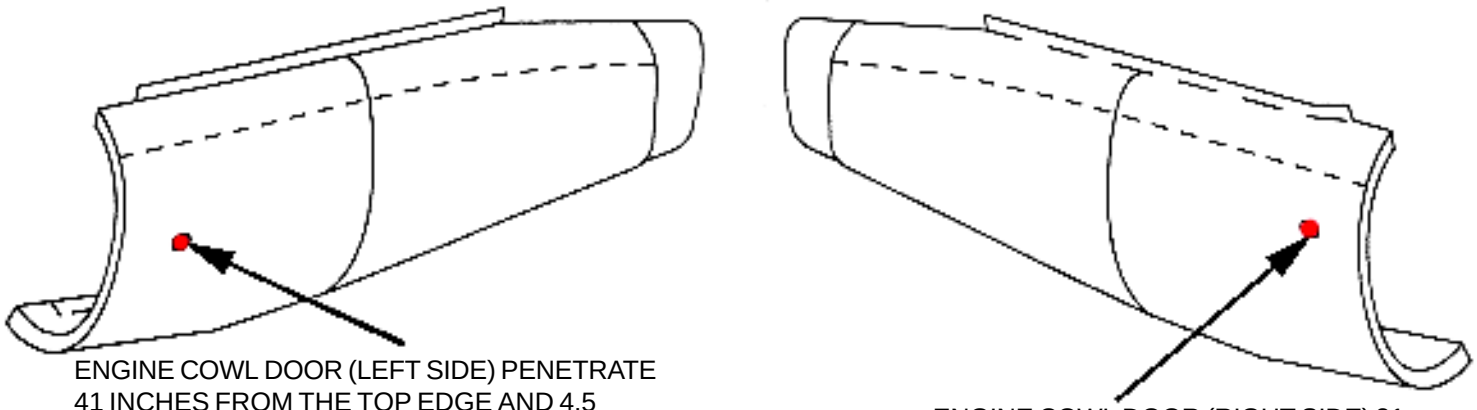

ENGINE COWL DOOR (LEFT SIDE) PENETRATE 41 INCHES FROM THE TOP EDGE AND 4.5 INCHES FROM THE FORWARD EDGE.

ENGINE COWL DOOR (RIGHT SIDE) 31 INCHES FROM THE TOP EDGE AND 4.5 INCHES FROM THE FORWARD EDGE.

SPECIAL TOOLS/EQUIPMENT
Power Rescue Saw
24 Ft Ladders
Fire Drill II

NOTE:
Personnel on board: Minimum - 21; Maximum - 40. 8 people can be seated in aft section of this aircraft.

AIRCRAFT ENTRY ALL MODELS

CAUTION

When cabin doors are opened from outside, escape slides will automatically deploy but will not inflate.

1. NORMAL ENTRY

a. Pull handle out and rotate clockwise, pull aft side of door outward while pushing forward side inward. Open door outward.

2. EMERGENCY ENTRY

a. Depress red panel, located top center of escape hatch(es). Push hatch inward and lift upward.

b. Pull handle out and rotate counterclockwise, pull aft side of door outward while pushing forward side inward. Open door outward.

c. Press catch to release and pull handle down to unlock. Push door in and slide forward. Enter through deck doors.

d. Press catch to release and rotate handle to unlock, and push door in. Enter forward compartment and then cabin through deck doors.

3. CUT-IN

a. Cut marked areas as last resort.

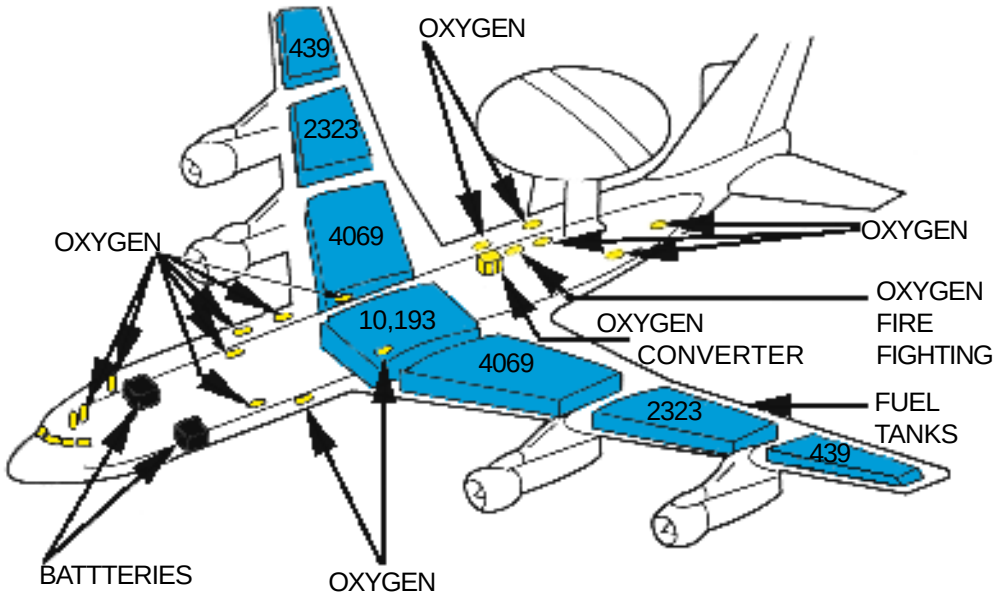

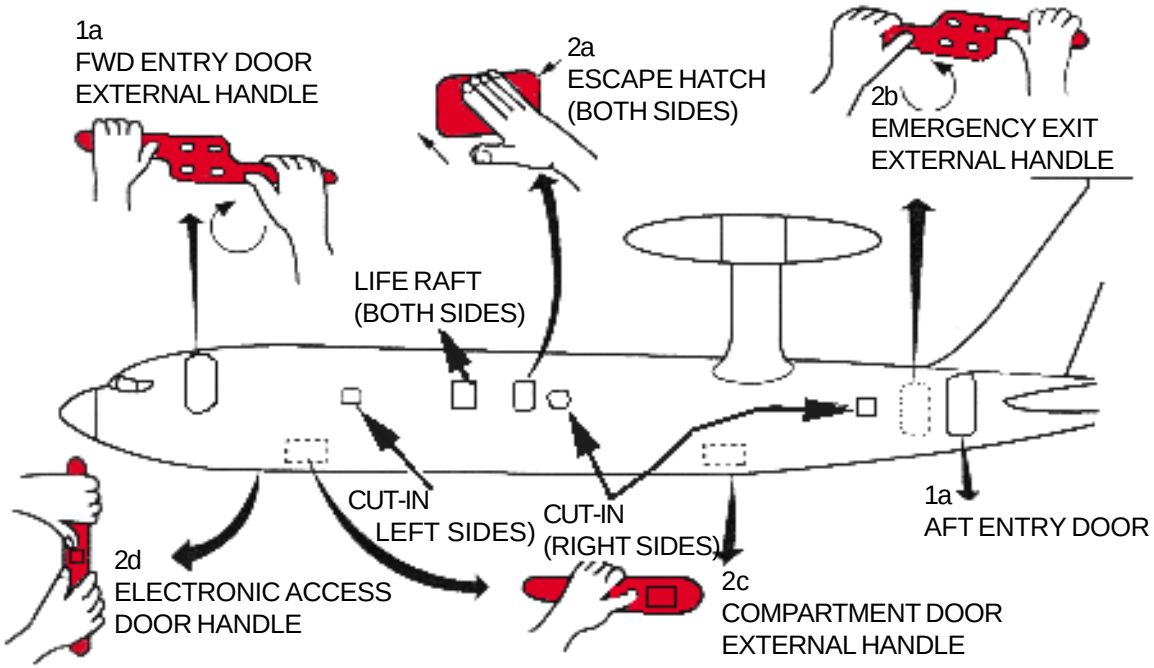

ENGINE SHUTDOWN AND AIRCREW EXTRACTION

1. ENGINE SHUTDOWN

a. Retard throttles, located on pilot's center console, to CUTOFF position (shuts off fuel and ignition).

b. Pull engine fire switches located on overhead electrical distribution panel.

c. Place battery switch, located top center on flight engineer's panel, to OFF position.

NOTE:
Open circuit breakers at batteries forward in lower lobe instead of disconnecting or removing batteries for power shutdown.

2. AIRCREW EXTRACTION

a. Unlatch seat belts and remove shoulder harnesses from flight crew and mission crew.

NOTE:

- If seat tracks are not damaged during crash landing, use adjustable seat controls for retraction.
- Rest area seats are equipped with seat belts only.
- Flight crew seat arm rests release to lift up.

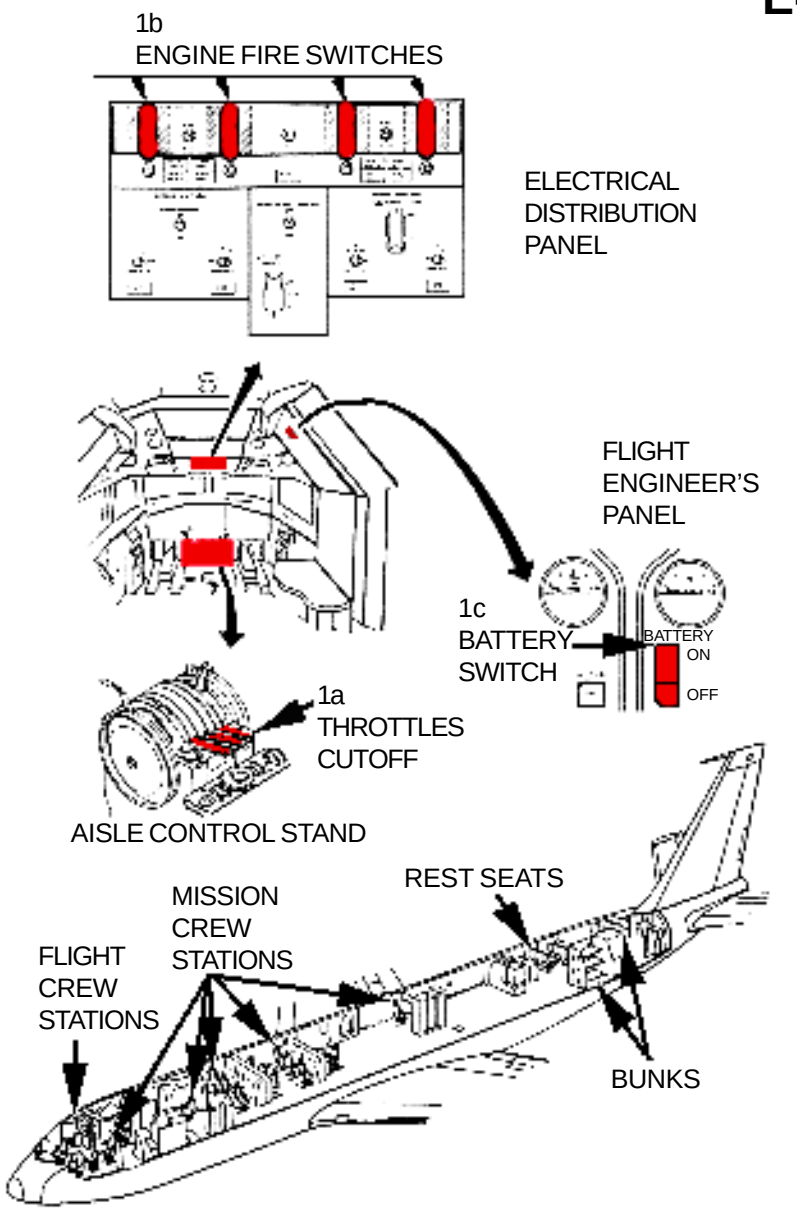

CABIN ARRANGEMENT

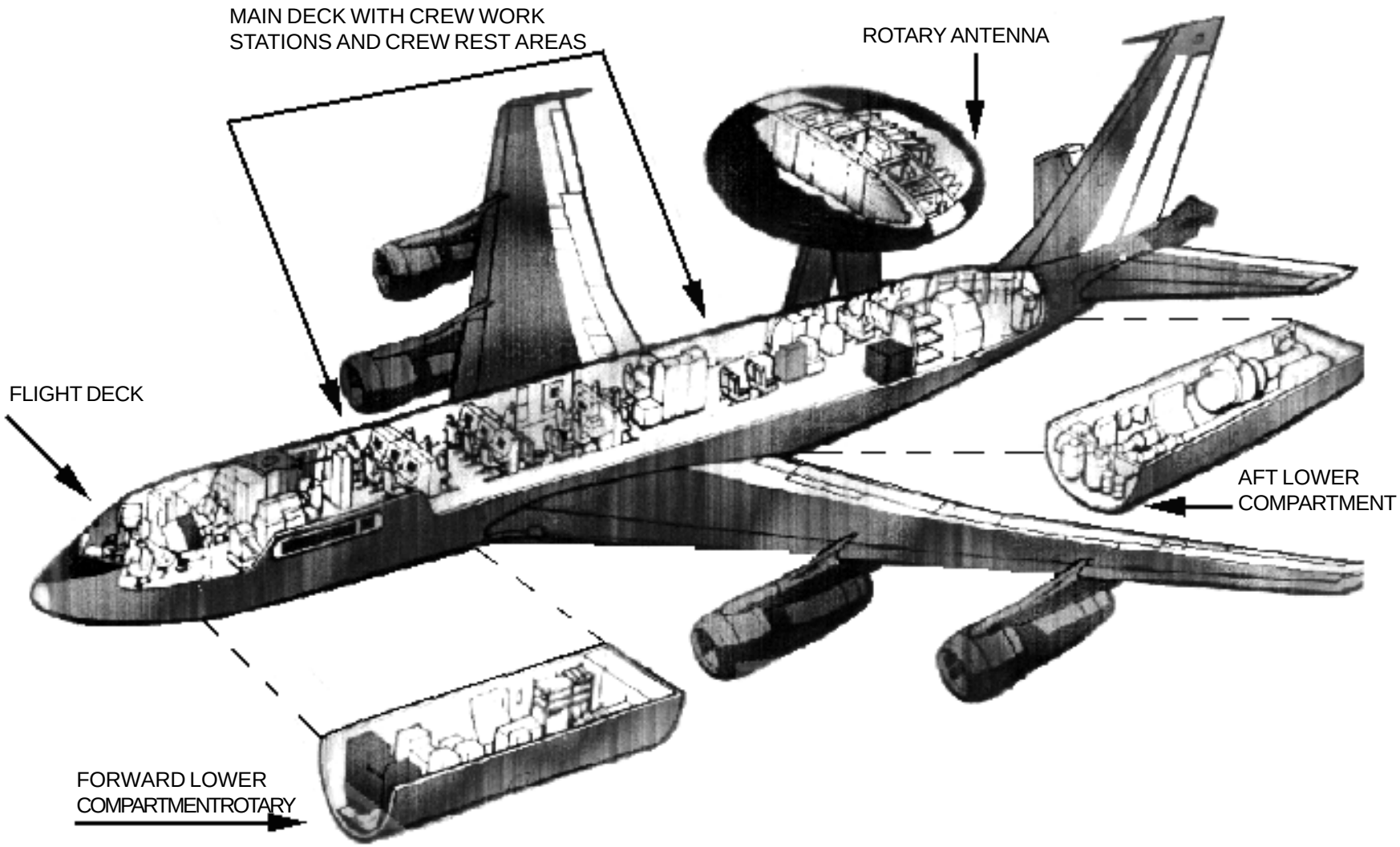

CABIN ARRANGEMENT-Continued

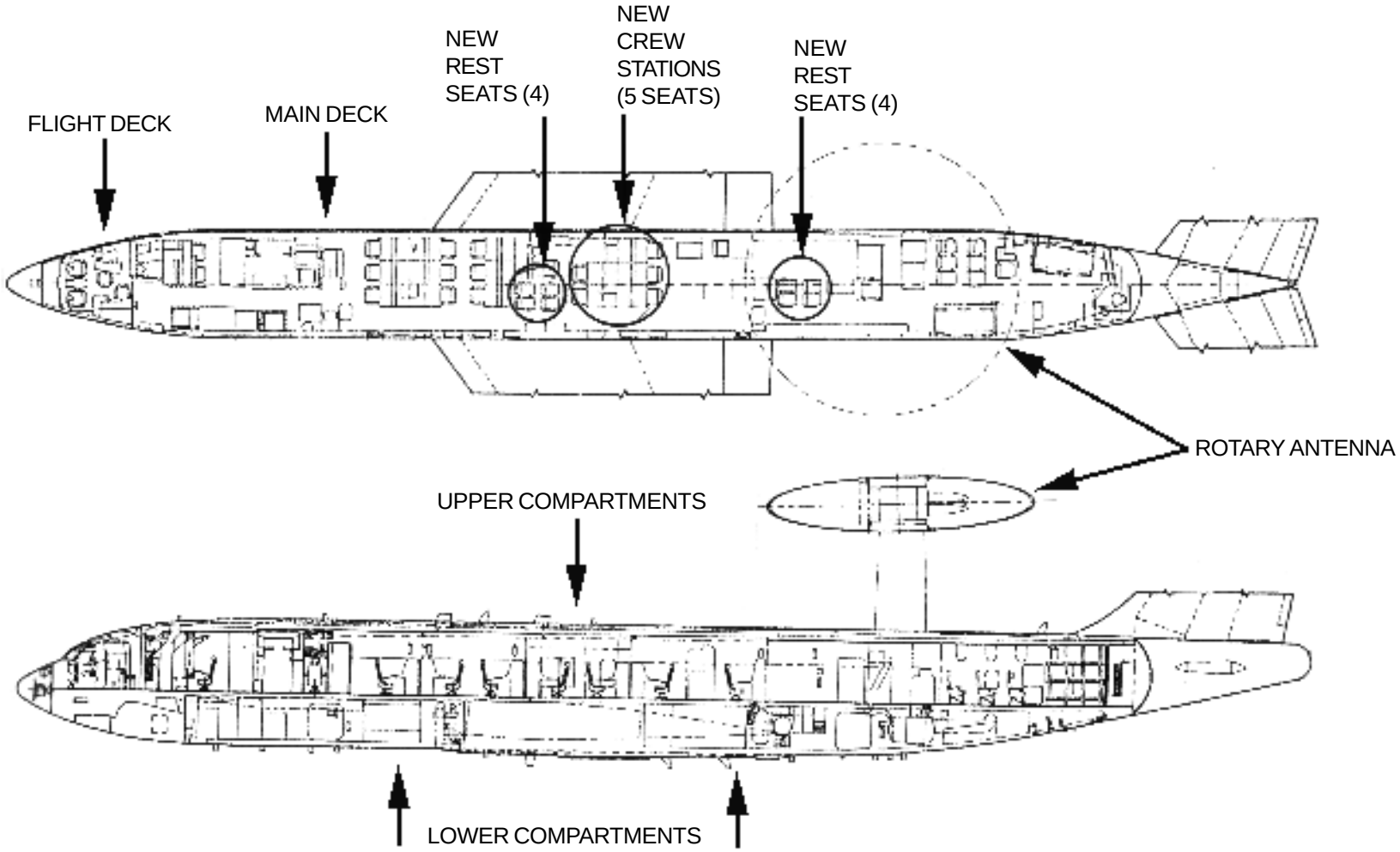

AIRCRAFT SKIN PENETRATION POINTS

NOTE:

Aircraft Dimensions
Length 231' 4"
Wing Span 195' 8"
Height 63' 5"

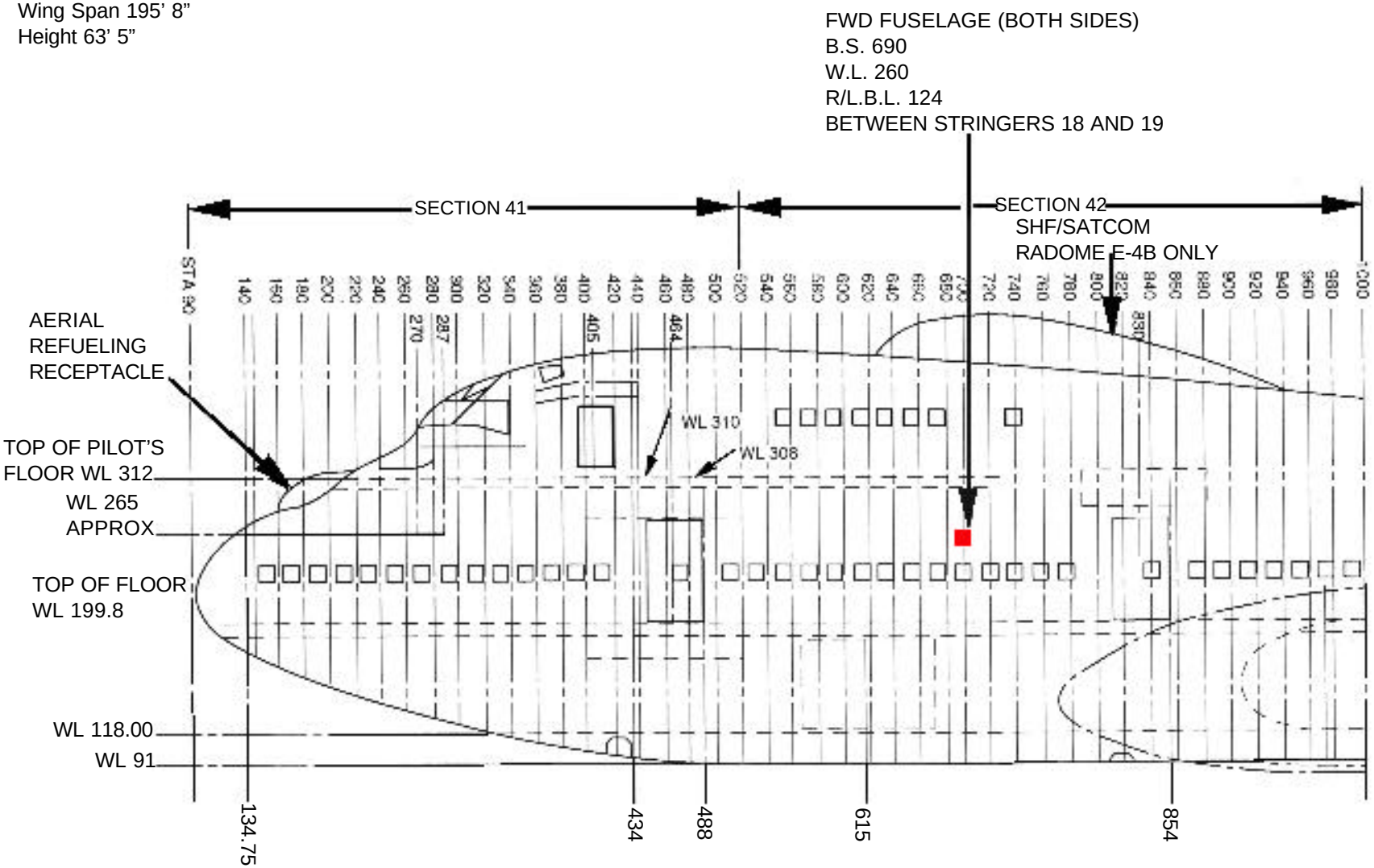

AIRCRAFT SKIN PENETRATION POINTS-Continued

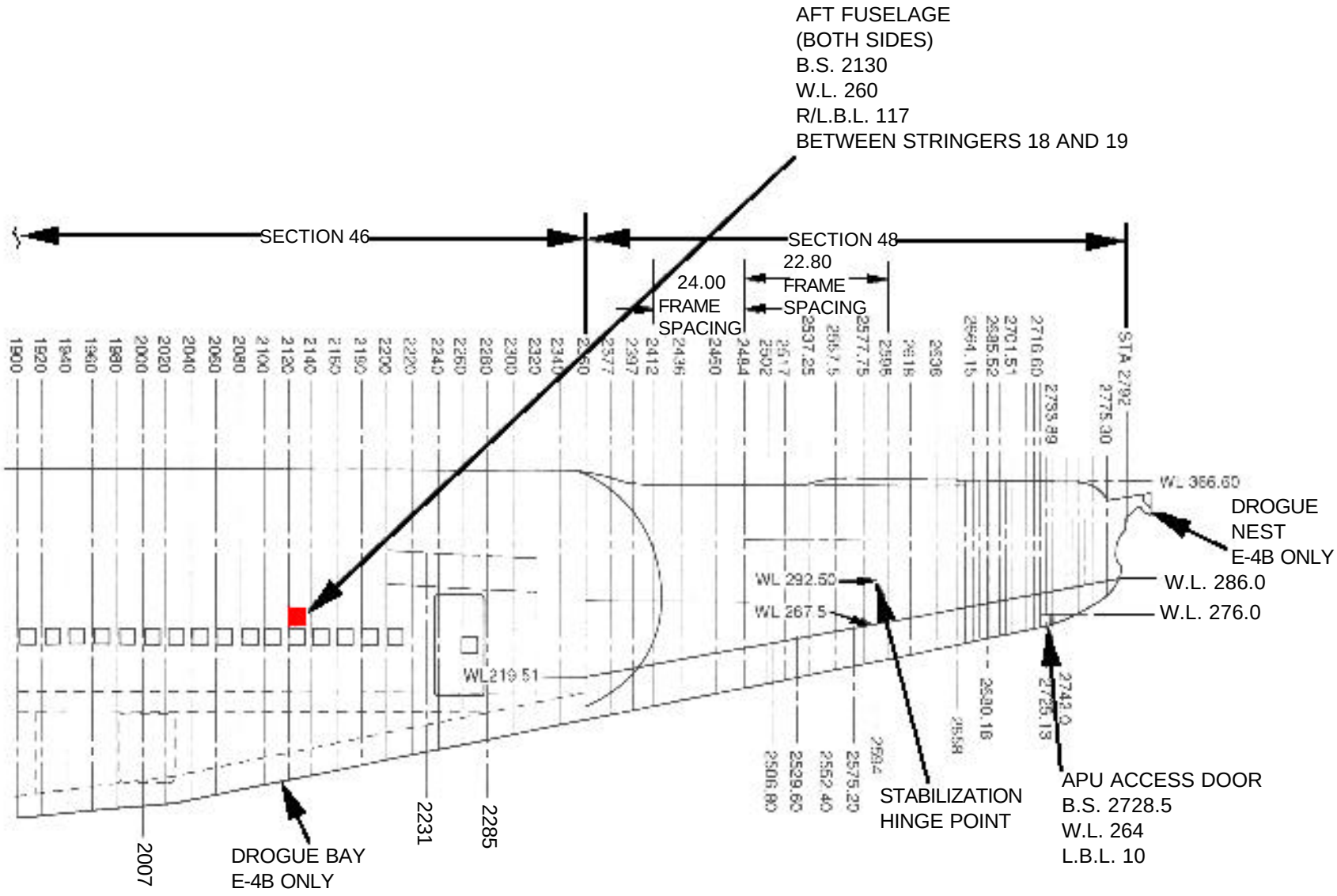

AIRCRAFT SKIN PENETRATION POINTS-Continued

NOTE:

Penetration points for the aircraft engines are identical regardless of position on the aircraft.

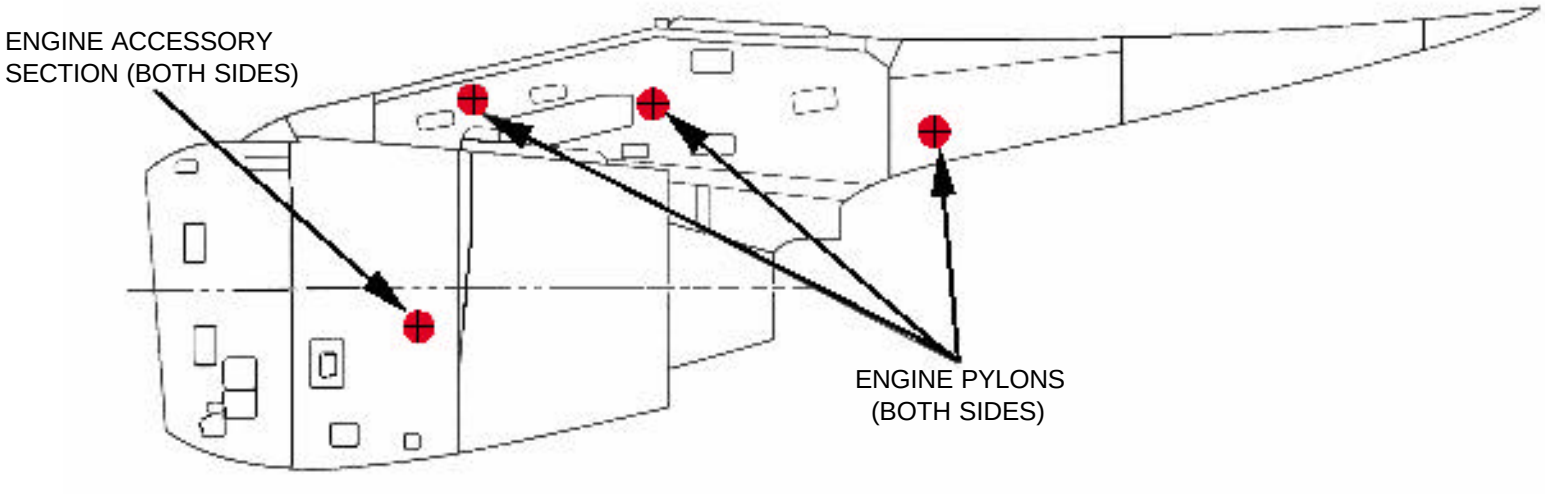

AIRCRAFT HAZARDS

NOTE:
Includes 20 knot crosswind effect.

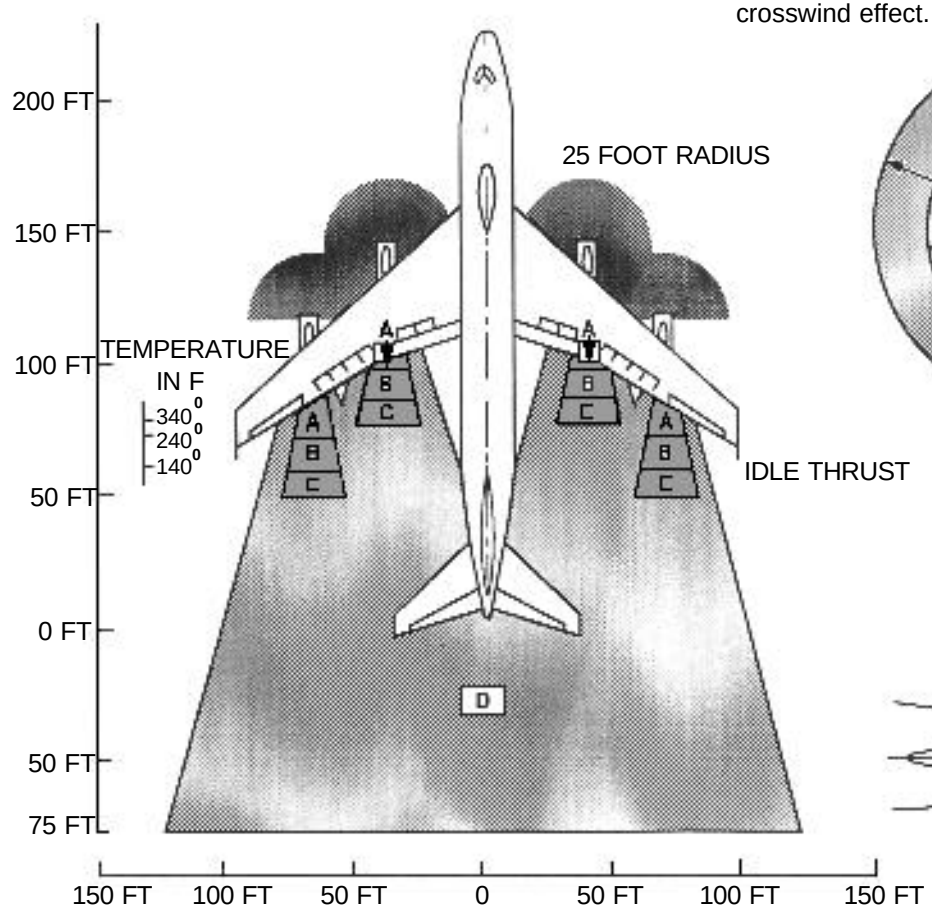

NOISE HAZARD AREAS

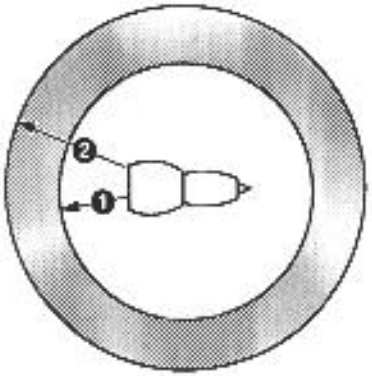

WARNING

❶ Prolonged exposure of one hour, even with ear protection, can cause ear damage.

❷ Ear protection required within this area.

POWER SETTING	RADIUS ❶	RADIUS ❷
GROUND IDLE	75'	100'
BREAK AWAY THRUST 52% N1	100'	150'
TAKEOFF THRUST	100'	200'

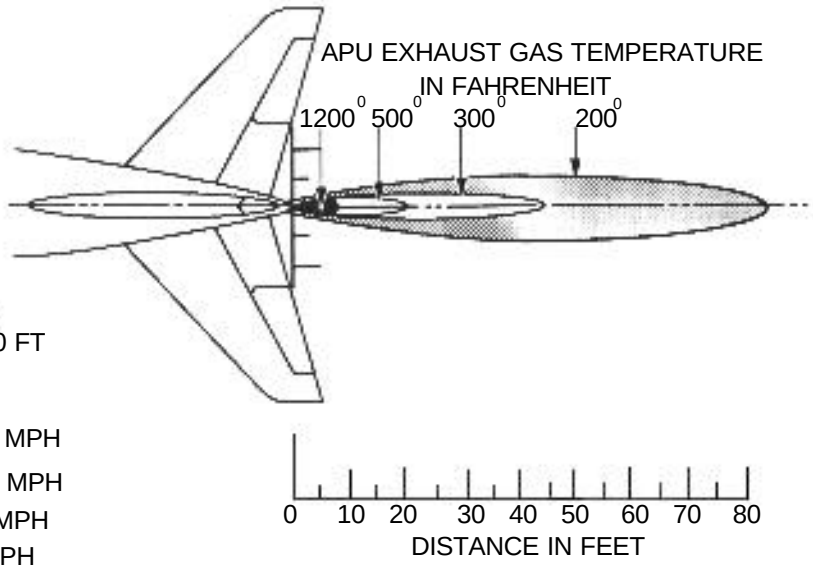

- INLET SUCTION DANGER
- A WIND VELOCITY APPROXIMATELY 210 TO 145 MPH
- B WIND VELOCITY APPROXIMATELY 145 TO 105 MPH
- C WIND VELOCITY APPROXIMATELY 105 TO 65 MPH
- D WIND VELOCITY APPROXIMATELY 65 TO 20 MPH

AIRCRAFT HAZARDS-Continued

RADIATION HAZARD AREAS
RADAR AND HIGH FREQUENCY (HF)

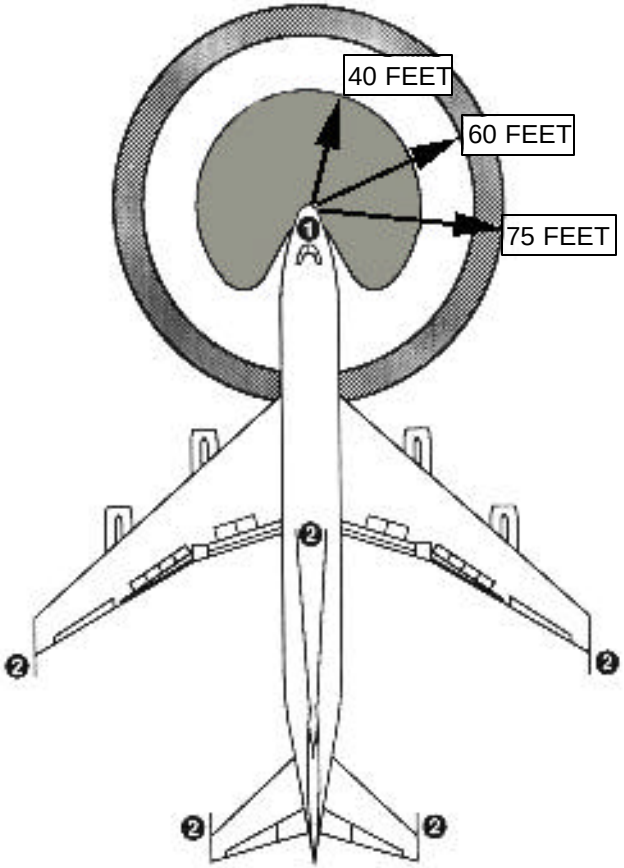

WARNING

❶ RADAR

- PERSONNEL RADIATION HAZARD AREA - 40 FEET
- POSSIBLE FUEL IGNITION AREA - 60 FEET
- POSSIBLE ELECTRO EXPLOSIVE DEVICE DETONATION - 75 FEET

❷ HF ANTENNAS

- During periods of HF transmission on the ground, personnel should stay away from all external surfaces of the aircraft and handling of metal objects such as light cords, cooling ducts, grounding cables, etc. attached to the aircraft. RF voltages can reach in excess of 700 volts between aircraft structure and ground. The RF voltages can result in shock or skin burns.
- Ground operation of the AN/ARC-58 is prohibited unless the aircraft is at least 200 feet from the following:

  (1) Unloaded weapons or warheads.

  (2) Loaded weapons in an aircraft with bomb bay doors open.

  (3) Missles with warhead compartment doors open, or thruster and squib access door open.

APU FIRE DETECTION AND CONTROL

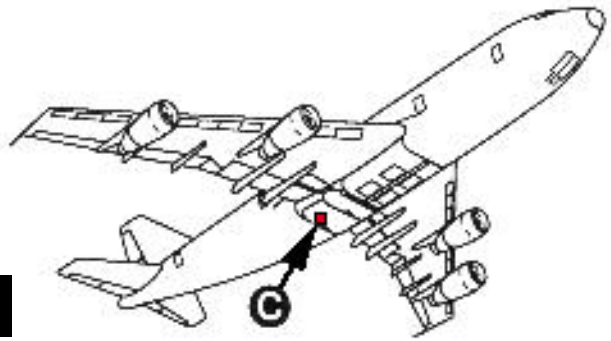

1 - WHEN PULLED, WILL SHUTDOWN THE APU AND ARM THE APU FIRE EXTINGUISHER CIRCUIT.

2 - WHEN PUSHED, WILL DISCHARGE THE CONTENTS OF THE APU FIRE EXTINGUISHER INTO THE APU COMPARTMENT.

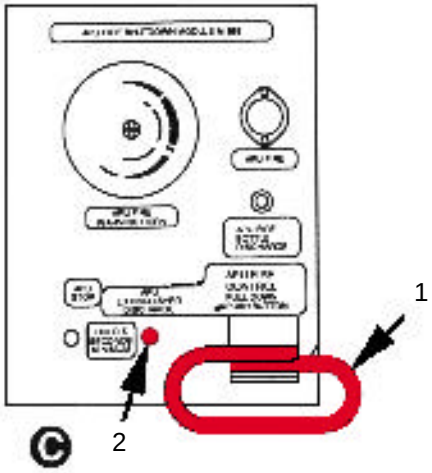

AIRCRAFT HAZARDS-Continued

UHF, UHF SATCOM AND SHF SATCOM RADIATION

WARNING

The radiation hazard shown is around the SHF SATCOM antenna and the UHF Transmitter Antennas. Accidental entry into the hazard area does not result in injury. It is only through prolonged exposure that the possibility of danger exists.

POSSIBLE FUEL IGNITION AREA

UHF AREAS HAZARDOUS TO PERSONNEL

SHF RADIO AREAS HAZARDOUS TO PERSONNEL

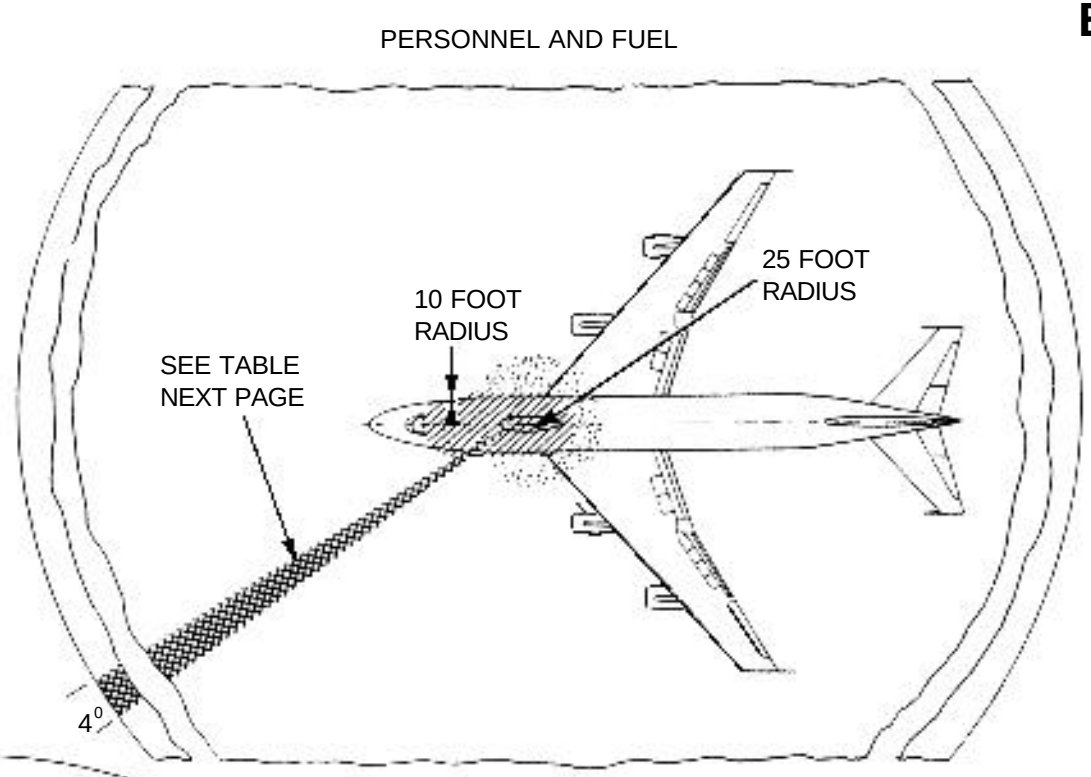

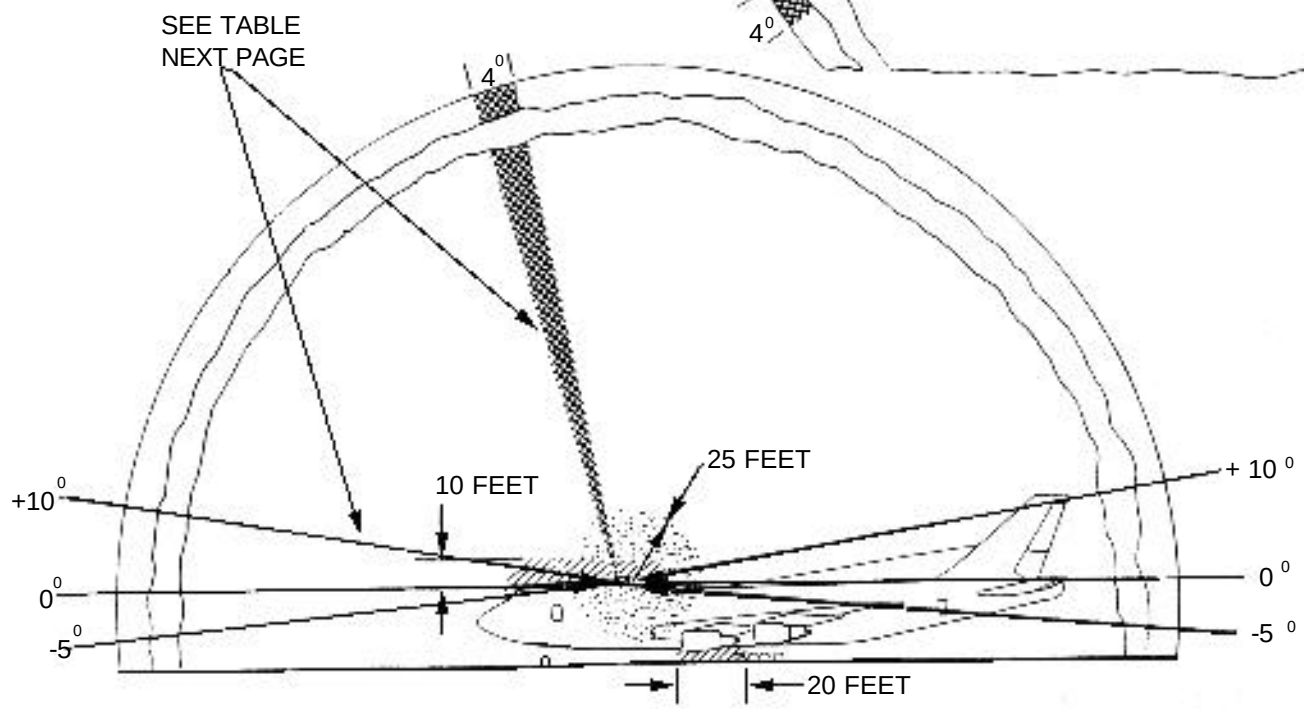

AIRCRAFT HAZARDS-Continued

UHF, UHF SATCOM AND SHF SATCOM RADIATION

WARNING

- UHF FDM hazard extends form transmit antennas No. 1-5: 100 feet
- UHF SATCOM hazard area is elliptical extending 40 feet from each antenna
- SHF SATCOM hazard area extends a maximum of 740 feet from the antenna (station 750.64)

ELECTRO EXPLOSIVE DEVICES HAZARD

UHF FDM

UHF SATCOM

SHF SATCOM

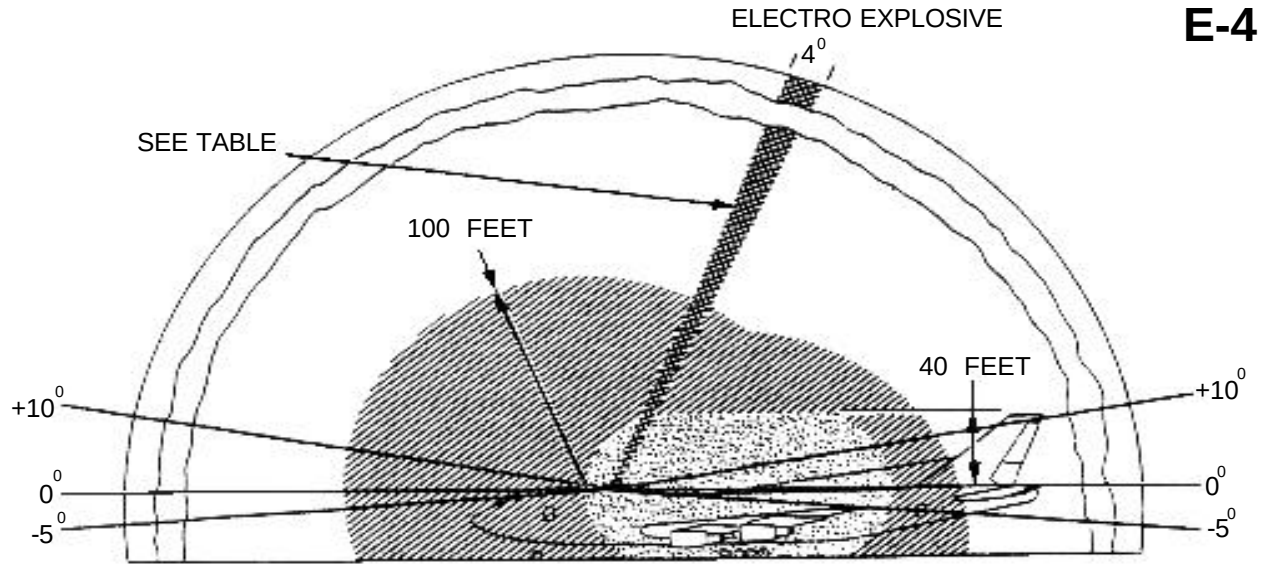

WARNING

- Radiation hazard exists in the main beam (+ 2 degrees from antenna centerline).
- 1000 watts is the maximum power limit for SHF SATCOM ground operation without radiation hazard override. The radiation hazard override permits operation of the SHF SATCOM antenna at full Transmitter power and at antenna elevations of +10 degrees to -5 degrees from horizontal.

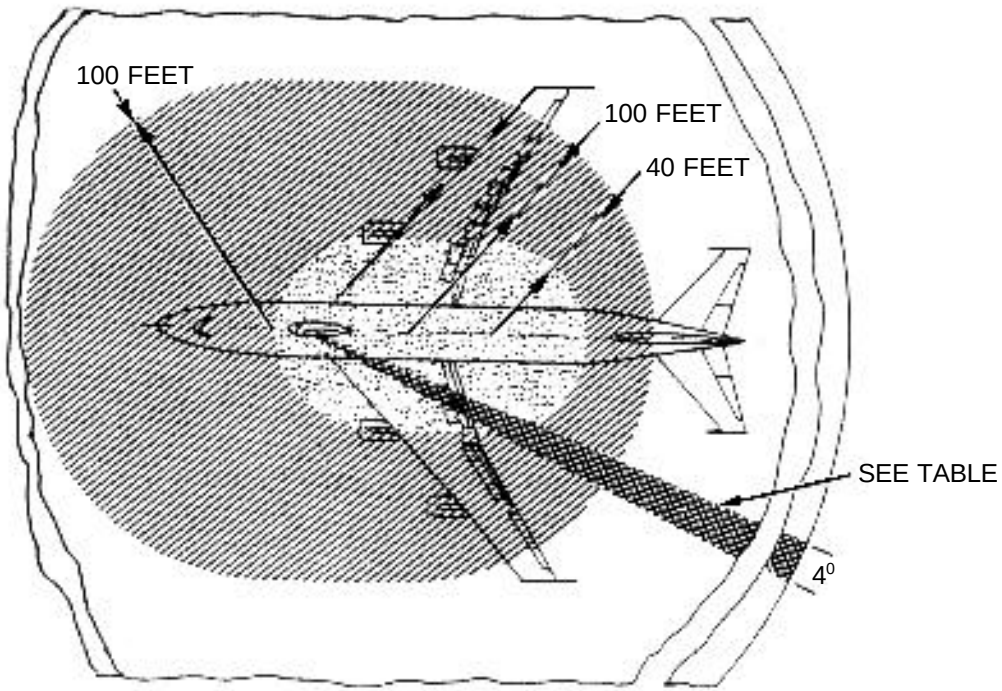

SHF SATCOM MAIN BEAN RADIATION HAZARDS			
TRANSMIT POWER (WATTS)	DISTANCE (FEET)		
	PERSONNEL	ELECTRO EXPLOSIVE DEVICES	FUEL
1000	110	210	5
3000	200	365	10
5000	250	470	10
7000	300	560	15
12500	380	740	20

AIRCRAFT ESCAPE ROUTES

NOTE:

Flight Engineer assists upper rest area & NCA evacuation.

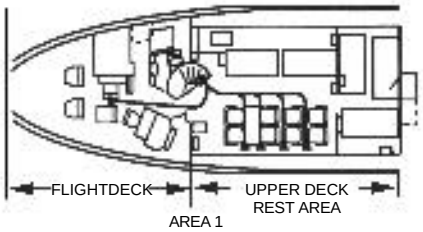

UPPER DECK

CAUTION

During ditching do not deploy slide at No. 3 Right Entry Door. It will interfere with No. 4 Right Escape Route.

NOTE:

- No. 4 Left Entry Door deactivated.
- Use Escape slides during ditching, if feasible, use of slides determined by height of doors above water.
- All positions with escape routes designated may be occupied for takeoff and landing, except positions in forward and aft lower equipment areas and the two seats in projection room.

WARNING

- All seats that rotate shall face aft for ditching and crash landing.
- Do not inflate life rafts in aircraft as they will not then pass through the exits.
- Life raft compartment doors must be closed after deployment rafts to permit unrestricted exit.
- If personnel caught in projection room, exit aft door of room past podium and through right door of briefing room to No. 2 Right Entry Door.

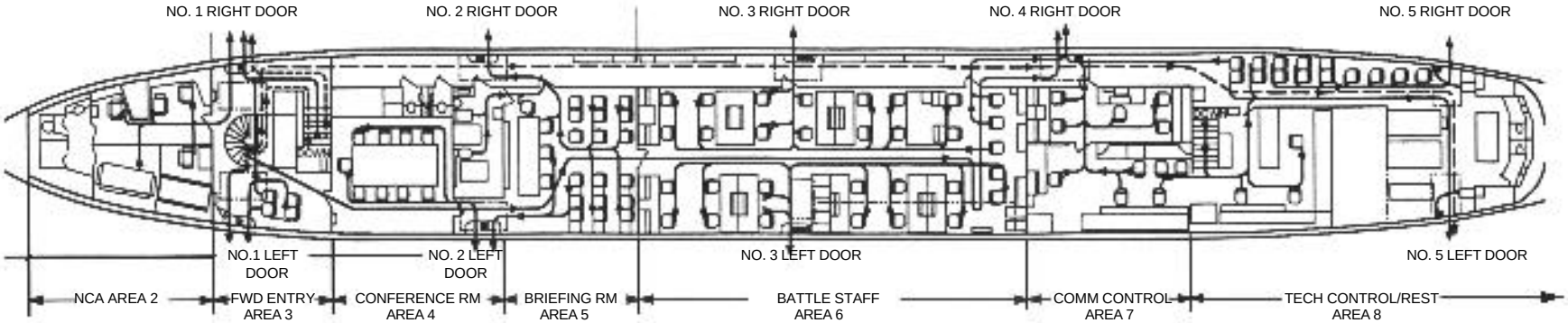

MAIN DECK

MAIN DECK

MAIN DECK

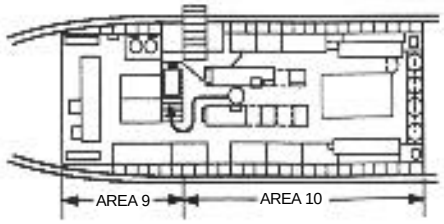

FWD LOWER LOBE

LIFE RAFT (20 MAN)
ESCAPE ROPE
KNOCK OUT PANEL

PILOT'S ESCAPE - MONITORING ROUTE
CO-PILOT'S ESCAPE - MONITORING ROUTE
NAVIGATOR'S ESCAPE - MONITORING ROUTE

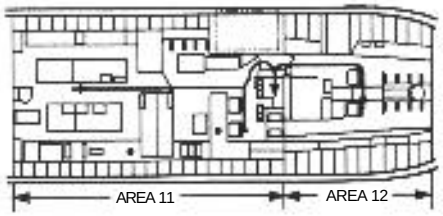

AFT LOWER LOBE

SPECIAL TOOLS/EQUIPMENT
Power Rescue Saw
35 Ft Ladder
Fire Drill II

AIRCRAFT ENTRY ALL MODELS

1. NORMAL/EMERGENCY ENTRY

a. Pull entry door handles from recess position and rotate 180 degrees clockwise for entry doors located on left side and counterclockwise for entry doors on right side.

NOTE:
All ten entry doors open outward, number (4) entry door left side of aircraft is blocked.

b. Press release button on crew escape hatch, located top forward center of crew compartment, and rotate escape hatch handle 180 degrees clockwise. Push escape hatch inward.

c. Pull handle, located on crew door, and rotate 180 degrees counterclockwise. Push door inward until slide tracks are engaged, then slide door aft.

NOTE:
- Opening a door from the outside disengages the emergency evacuation system and the escape chute will not deploy.
- All emergency escape chutes are deployed from inside the aircraft only.

2. CUT-IN

a. Cut areas along window lines as last resort.

NOTE:
2 inch band of contrasting color around all doors and hatch operable from outside the aircraft.

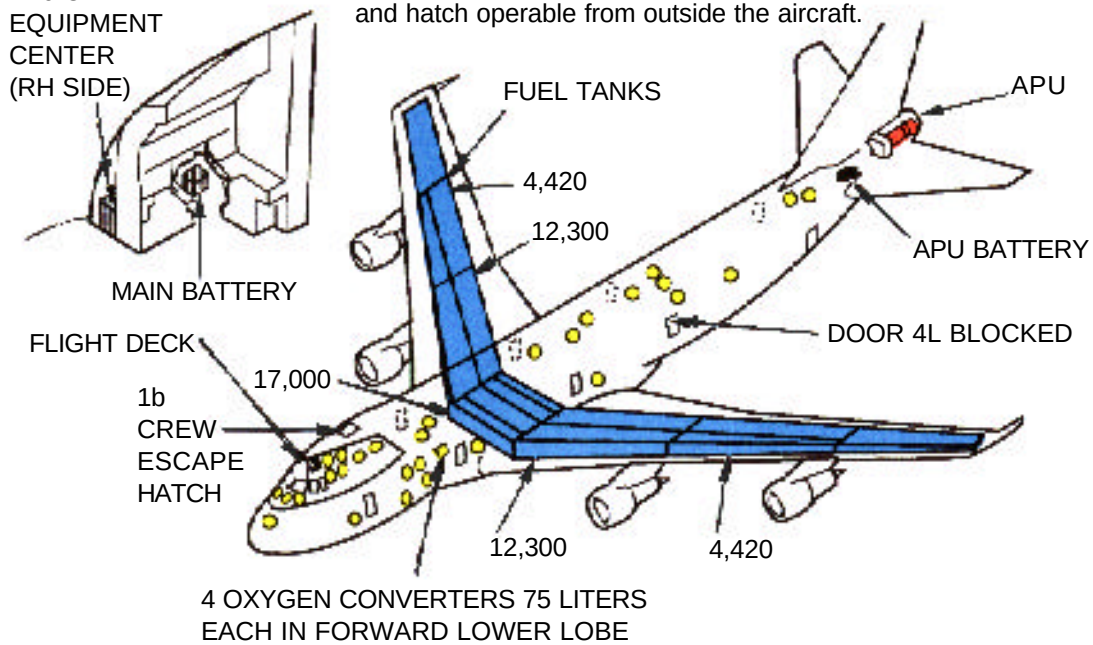

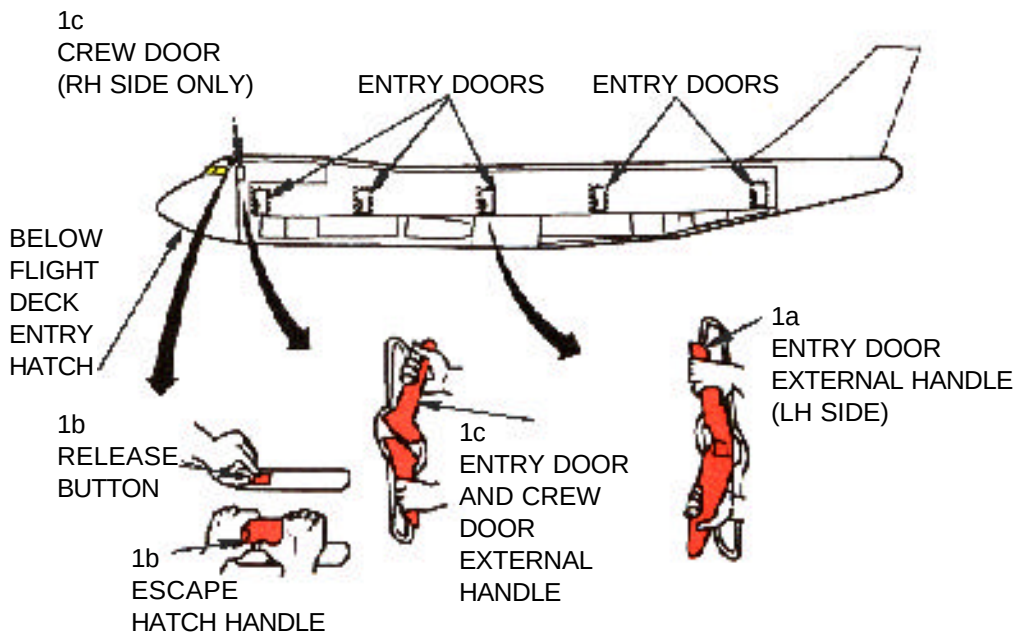

ENGINE SHUTDOWN AND AIRCREW EXTRACTION

1. ENGINE SHUTDOWN

a. Retard THROTTLES, located on pilot's center console, by pulling UP and FULL DOWN to IDLE CUT-OFF position.

b. Place ENGINE START LEVERS, located on pilot's center console, to CUT-OFF position.

NOTE:
If engines fail to shutdown, pull emergency fire T-handles, located on pilot's overhead panel.

c. Use this if needed. Place APU switch, located on flight engineer's upper left panel, to STOP position. For EXTERNAL APU shutdown, see page E-4.5.

NOTE:
If APU fails to shutdown, pull emergency fire T-handle, located on flight engineer's overhead panel.

d. Place BATTERY SWITCH, located on flight engineer's center panel upper left side, to OFF position.

2. AIRCREW EXTRACTION

a. Unlatch lap belts and remove shoulder harness from crewmembers.

b. Depress control handles and rotate flight engineer's seat from left to right. A foot pedal at base of pedestal can be depressed to move the navigator's seat aft. Use the third handle inboard of pilot and copilot's seat for forward and aft adjustments. A dial knob is used to release restraints.

c. Passenger seats are equipped with lap belts only.

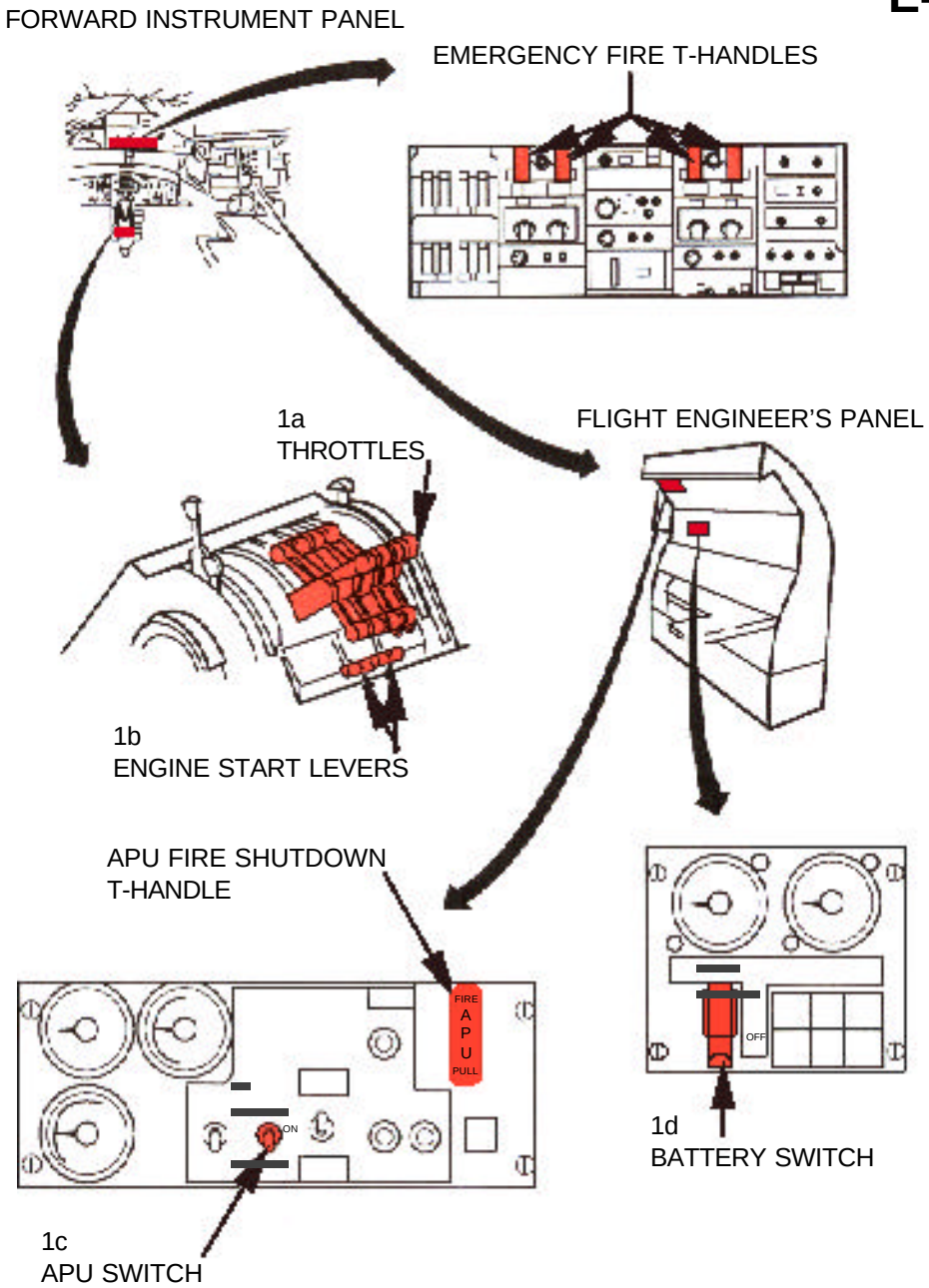

AIRCREW SEATING AND POSITIONING

NOTE:

Pilot's seat is shown, copilot's seat is identical except controls are on left side.

LEGEND

1. INERTIA REEL SHOULDER HARNESS
2. ARMREST ADJUSTMENT CONTROL HANDLE
3. SEAT BOTTOM TILT (T) ADJUSTMENT CONTROL HANDLE
4. VERTICAL (V) ADJUSTMENT CONTROL HANDLE
5. FORE/AFT/LATERAL (H) ADJUSTMENT CONTROL HANDLE
6. BACKREST RECLINE (R) ADJUSTMENT CONTROL HANDLE
7. ROTARY RELEASE BUCKLE FOR SAFETY RESTRAINTS

PILOT'S/COPILOT'S SEAT

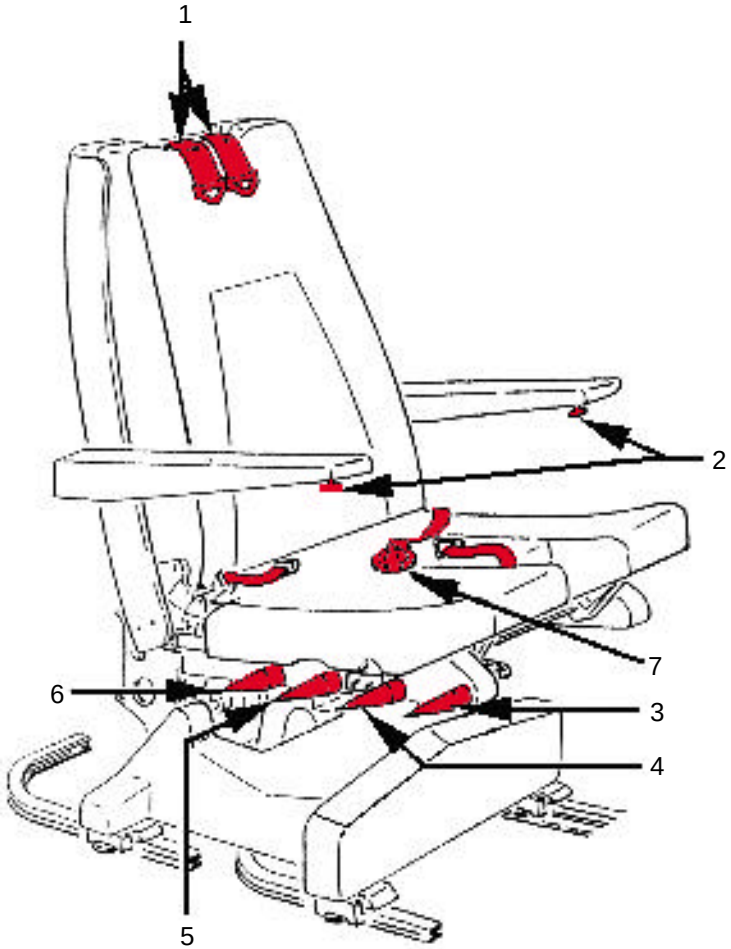

AIRCREW SEAT AND POSITIONING-Continued

NOTE:
The swivel(s) adjustment control handle and the lateral adjustment control handle are located on the right hand side of the seat.

NOTE:
The navigator's seat is identical to the flight engineer's seat, except that it is equipped with a headrest.

LEGEND

1. INERTIA REEL SHOULDER HARNESS
2. ARMREST ADJUSTMENT CONTROL HANDLE
3. VERTICAL (V) ADJUSTMENT CONTROL HANDLE
4. FORWARD/AFT(H) ADJUSTMENT CONTROL HANDLE
5. BACKREST RECLINE (R) ADJUSTMENT CONTROL HANDLE
6. SAFETY RESTRAINT LEVER BUCKLE

ENGINEER'S/NAVIGATOR'S SEAT

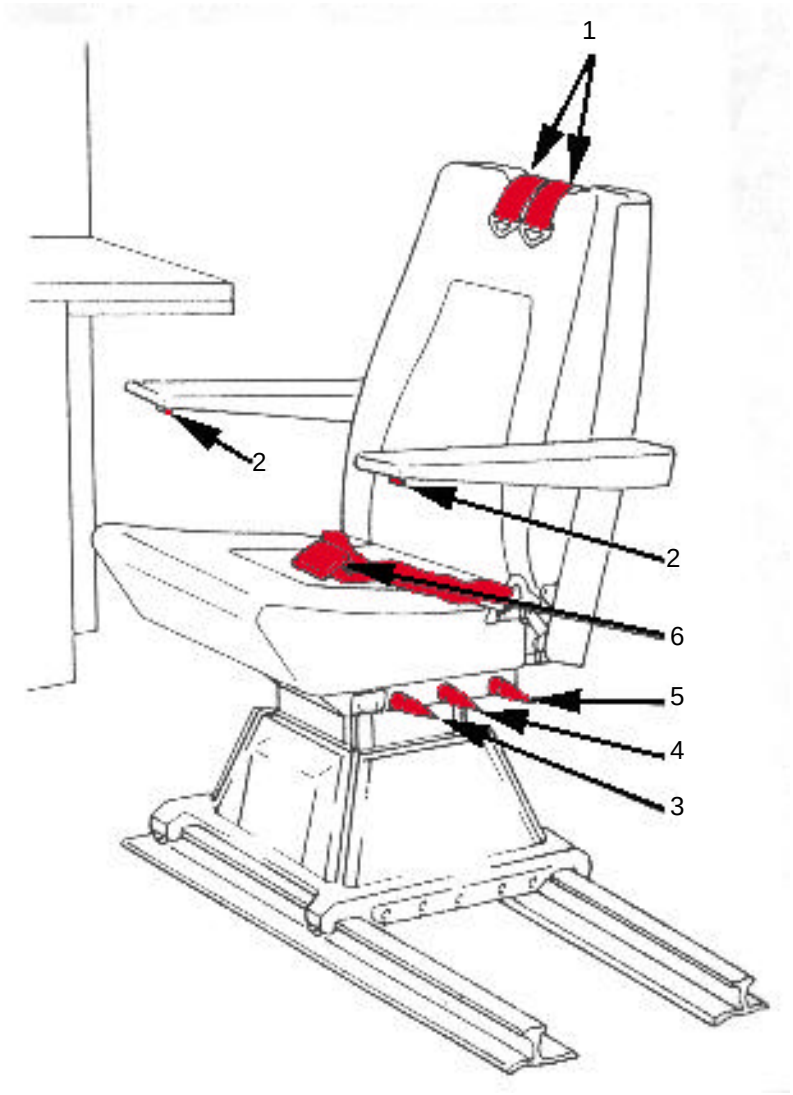

AIRCREW SEAT AND POSITIONING-Continued

NOTE:

The backrest folover control handle is located on the lower inboard side of the seat back. The forward and aft adjustment control handle is located on the left side of the seat.

LEGEND

1. FOLDING AND STOWAGE CONTROL HANDLE
2. BACKREST RECLINE ADJUSTMENT CONTROL HANDLE

OBSERVER'S SEAT

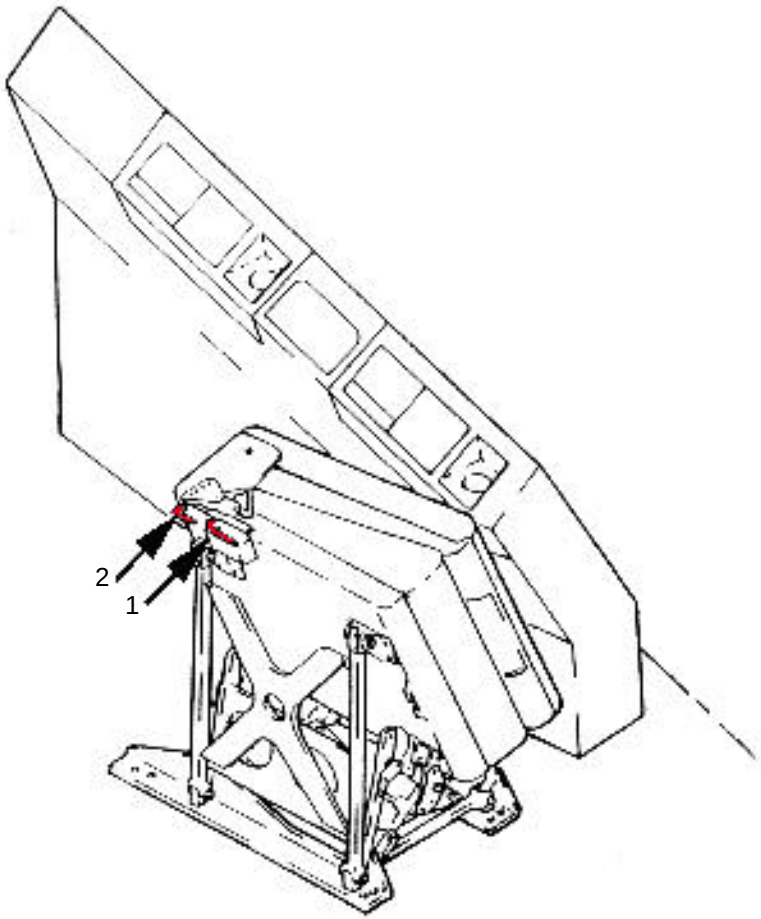

E-4A GENERAL CABIN ARRANGEMENT

NOTE:

Doors that have a keyless lock are equipped with an emergency kickout panel. These entrances are marked on the floor plan with an asterisk(*).

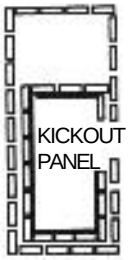

KEYLESS DOOR
(TYPICAL)

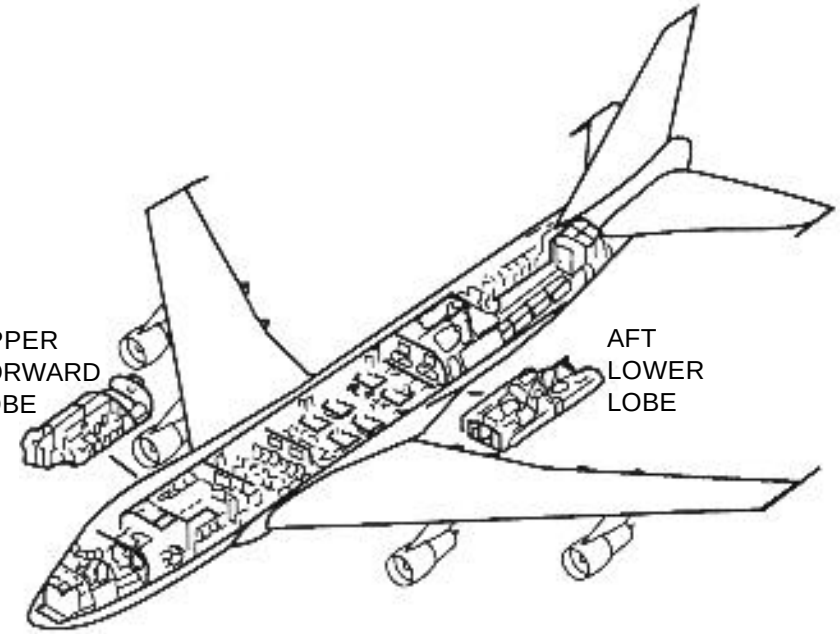

CREW SERVICE
ENTRANCE DOOR

UPPER FORWARD LOBE

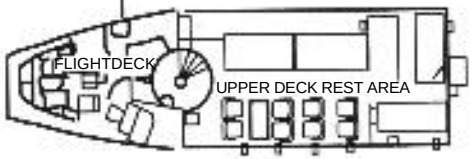

NO. 1 RIGHT
MAIN DECK
ENTRY DOOR

NO. 2 RIGHT
MAIN DECK
ENTRY DOOR

NO. 3 RIGHT
MAIN DECK
ENTRY DOOR

NO. 4 RIGHT
MAIN DECK
ENTRY DOOR

NO. 5 LEFT
MAIN DECK
ENTRY DOOR

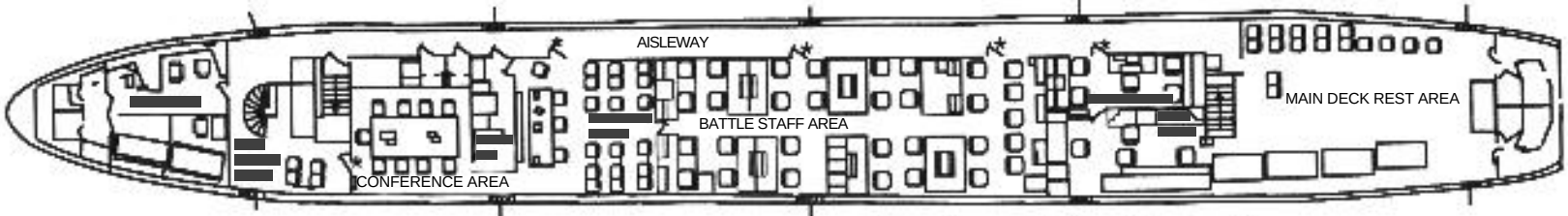

NO. 1 LEFT
MAIN DECK
ENTRY DOOR

NO. 2 LEFT
MAIN DECK
ENTRY DOOR

NO. 3 LEFT
MAIN DECK
ENTRY DOOR

NO. 5 LEFT
MAIN DECK
ENTRY DOOR

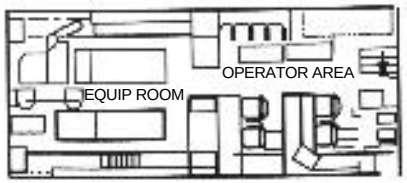

AFT LOWER LOBE

E-4B GENERAL CABIN ARRANGEMENT

NOTE:

AIRCRAFT DIMENSIONS
LENGTH 231' 4"
WING SPAN 195' 8"
HEIGHT 63' 5"

NOTE:

Doors that have a keyless lock are equipped with an emergency kickout panel. These entrances are marked on the floor plan with an asterisk(*).

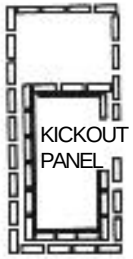

KEYLESS DOOR
(TYPICAL)

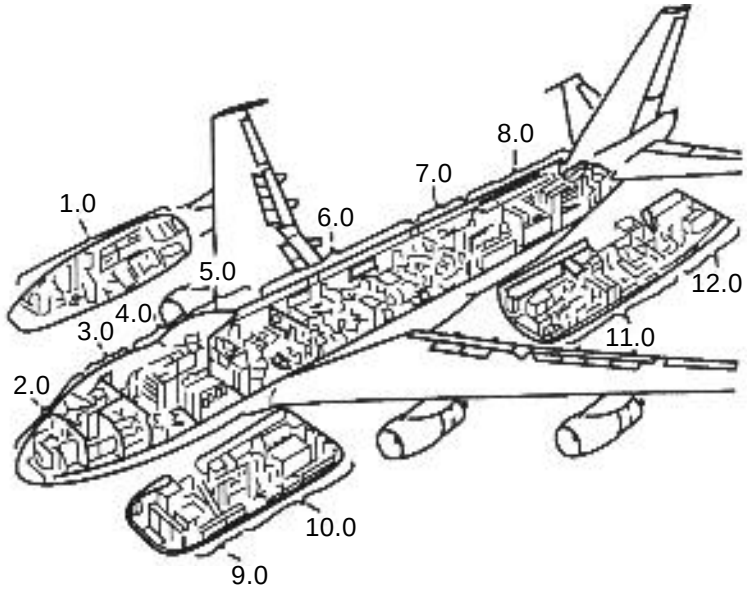

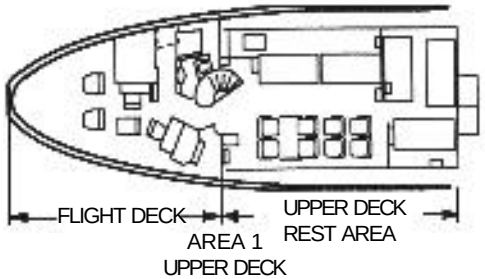

1.0 FLIGHT DECK AND UPPER DECK REST AREA
2.0 NCA AREA
3.0 FORWARD ENTRY AREA
4.0 CONFERENCE ROOM
5.0 BRIEFING ROOM
6.0 BATTLE STAFF AREA
7.0 COMMUNICATION CONTROL AREA
8.0 TECHNICAL CONTROL/REST AREA
9.0 FLIGHT AVIONICS AREA
10.0 FORWARD LOWER EQUIPMENT AREA
11.0 AFT LOWER EQUIPMENT AREA
12.0 LOWER TRAILING WIRE ANTENNA AREA

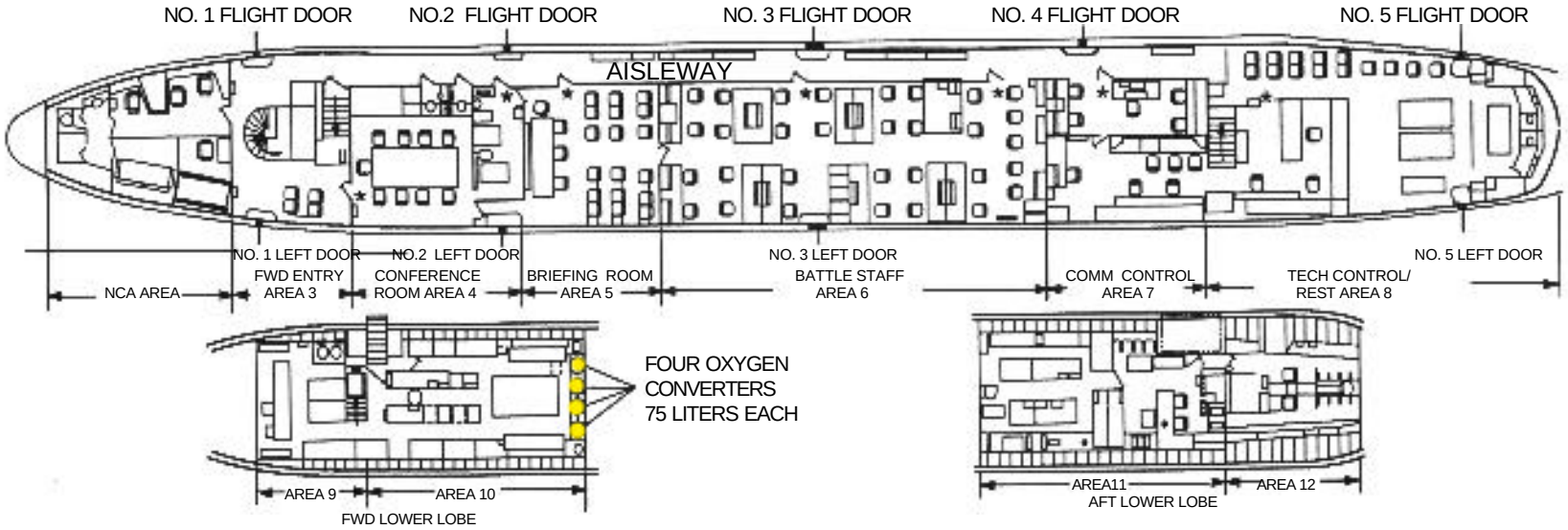

E-4B OXYGEN SYSTEM

INCORPORATING TCTO 1E-4B-573

NOTE:

TCTO 1E-4B-573 changes location of oxygen system and uses oxygen converters instead of oxygen cylinders. Referrring to page E-4.15, the unmodified aircraft oxygen system is located in area 10 of the forward lower lobe. Modified aircraft oxygen converters are located in the aft right side of area 9.

CAPACITY: 75 LITERS
TYPE: GASEOUS
LOX PRESSURE: 300 +/- 15 PSI

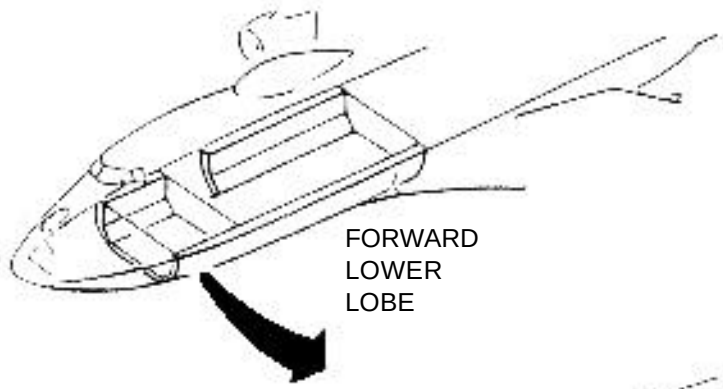

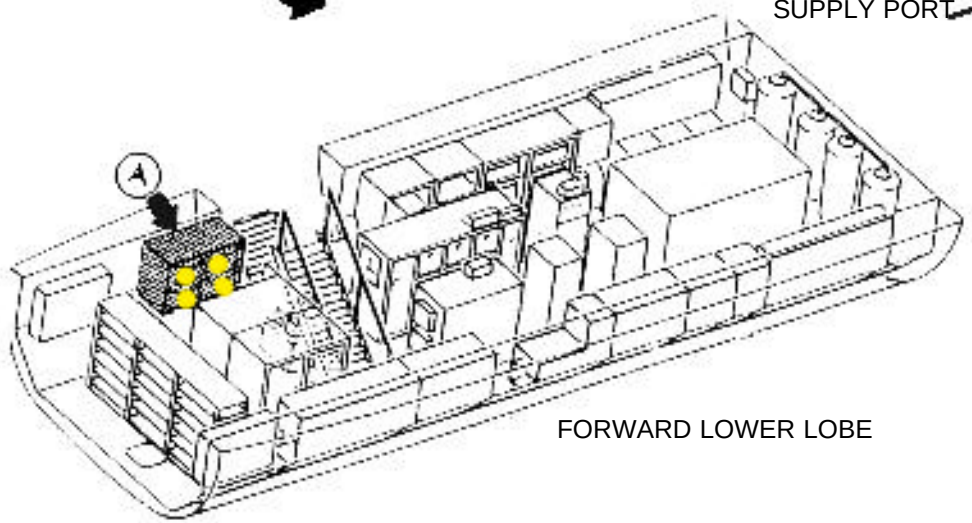

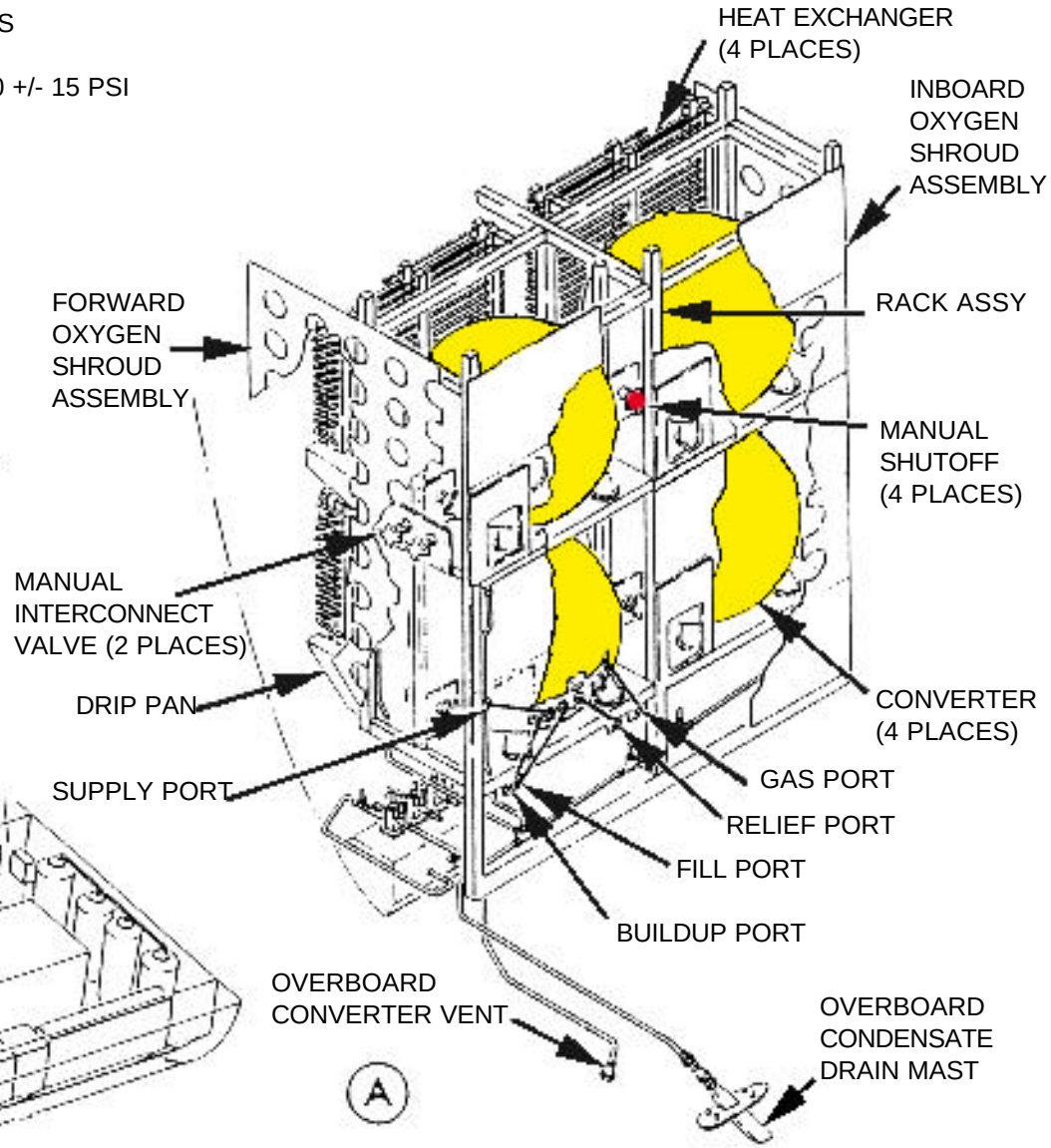

AIRCRAFT PAINT SCHEME

E-6B

AIRCRAFT DIMENSIONS AND HAZARDS

DIMENSIONS
LENGTH 152 FT 11 IN (46.61 m)
HEIGHT 42 FT 5 IN (12.93 m)
WING SPAN 148 FT 2 IN (45.16 m)

NOTE:

The Mercury Tacamo II (TAke Charge And Move Out) is 75% common to the E-3. The main differences are:

(1) Deletion of the dorsal radome and its support structure
(2) Addition of wing tip ESM/SATCOM pods
(3) HF antenna fairings
(4) Increased corrossion protection
(5) Retained the nuclear/EMP (electromagnetic pulse) hardened airframe
(6) Incorporation of large forward freight door (707-320C)
(7) Landing gear identical to the E-3
(8) Powerplant: Four 97-86 kN (22,000 lb st) CFM International F108-CF-100 turbofans
(9) Single point refueling
(10) In-flight refueling via boom receptacle above flight deck

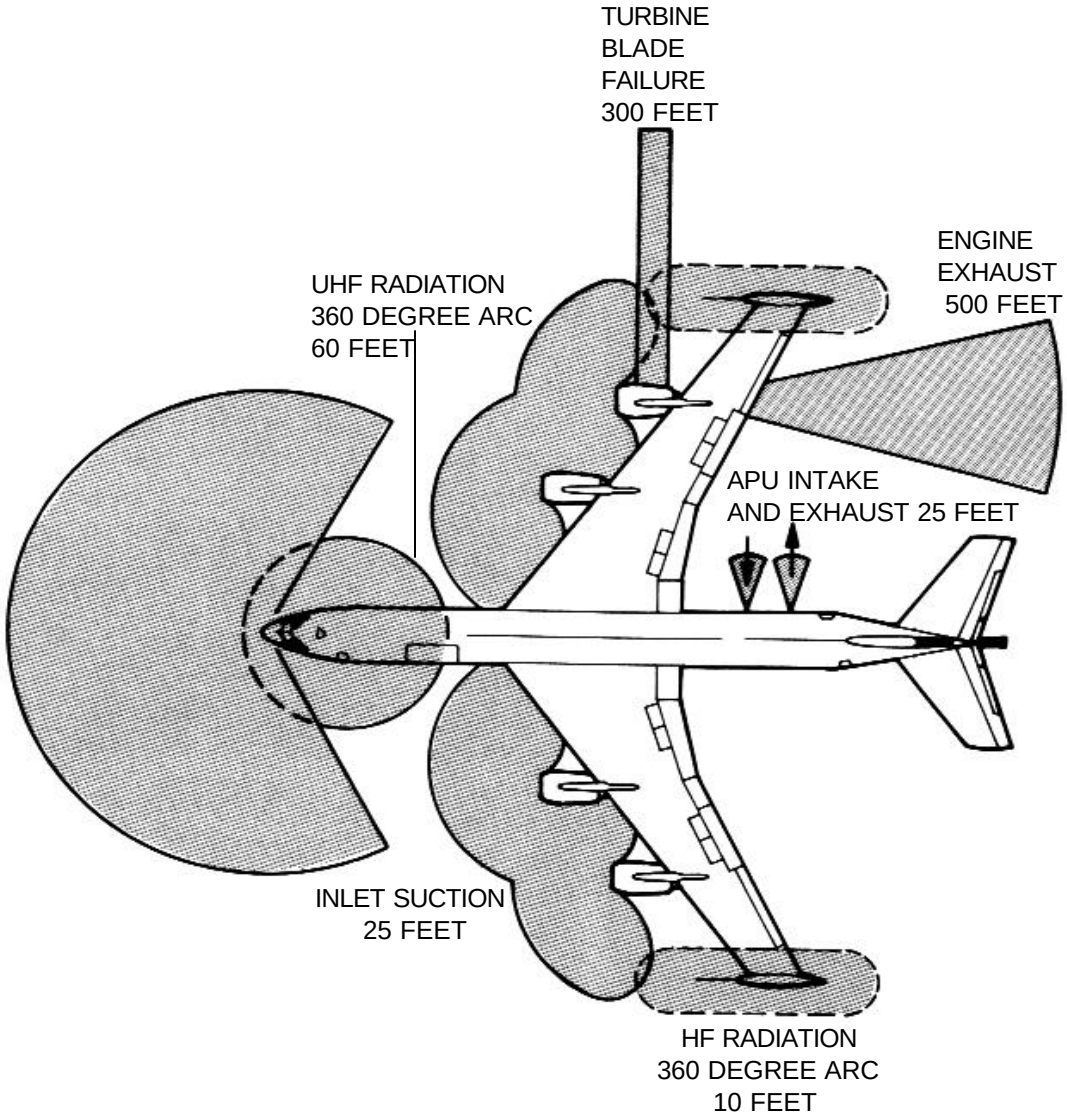

AIRFRAME MATERIALS

ALUMINUM

STEEL

OTHER-FIBERGLASS

NOTE:
Skin penetration points are similar to the E-3. See pages E-3 30/35.1, .2, & .3.

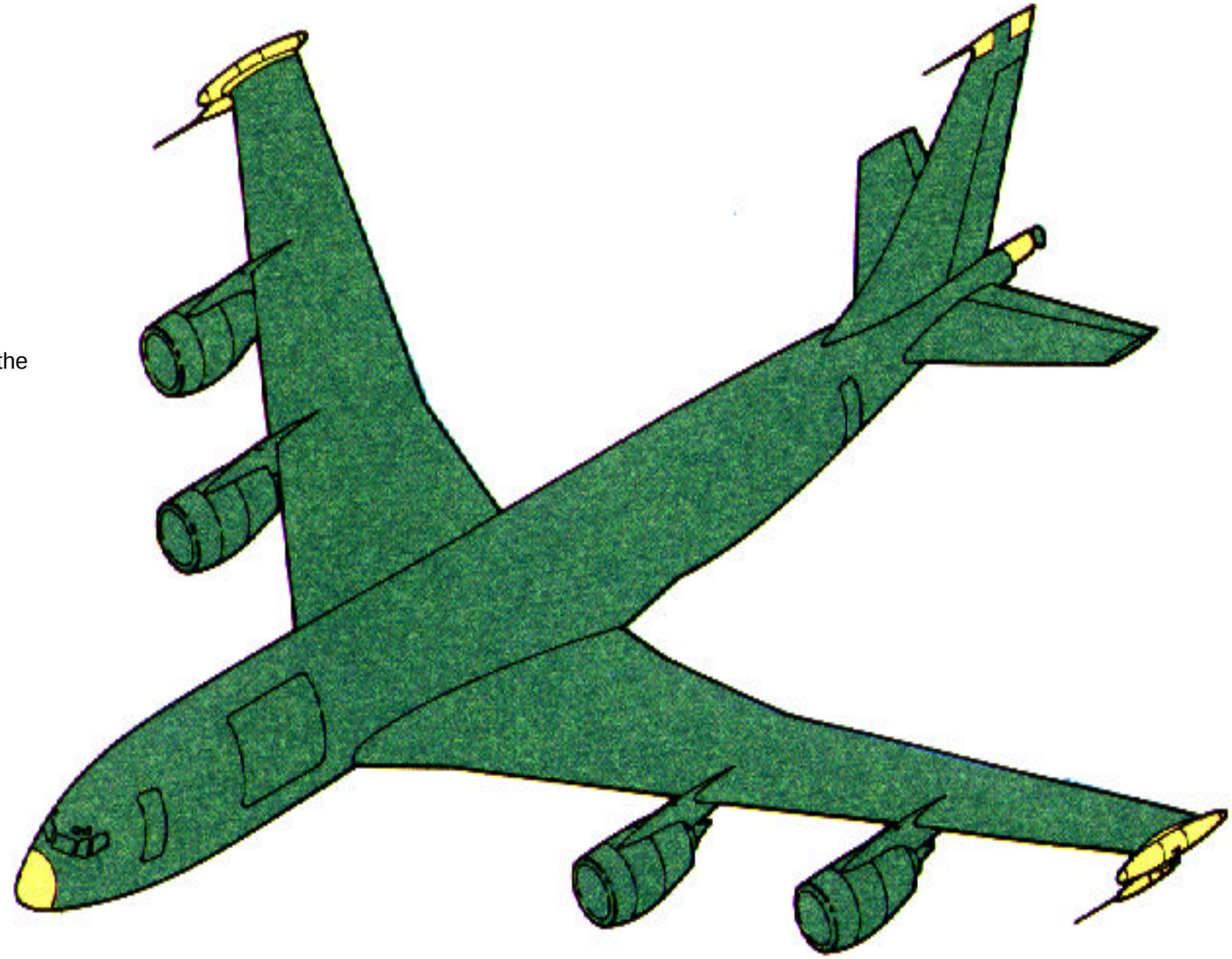

SPECIAL TOOLS/EQUIPMENT
Power Rescue Saw
Crash Axe
SPAAT/Fire Drill II
24 Foot Ladders

AIRCRAFT ENTRY

1. NORMAL ENTRY

NOTE:

Normal entry to the main deck is through the forward and aft main doors on the left side. Normal entry to the forward and aft lower compartments is through the forward and aft cargo doors on the right side. The forward and aft lower compartemnts also provide access to the main deck through access hatches located on the overhead of each compartment.

a. Pull either the main door handle out and rotate clockwise.
b. Release and stow handle.
c. Pull on aft side of door while pushing in on forward side until door is parallel to aircraft and door open latch has caught.
d. Press catch on either forward or aft cargo door handle.
e. Rotate handle counterclockwise, push door in, and slide door forward.
f. To access the main deck, depress latch on access hatch and push upward on bottom of hatch until uplock is engaged.

2. EMERGENCY ENTRY

NOTE:

Emergency entry may gained through the radio access door (aft of nose landing gear doors), emergency exit hatches (over each wing), and bailout door (aft right side).

a. Press catch on radio access door release handle.
b. Rotate handle counterclockwise and push up and forward on door.

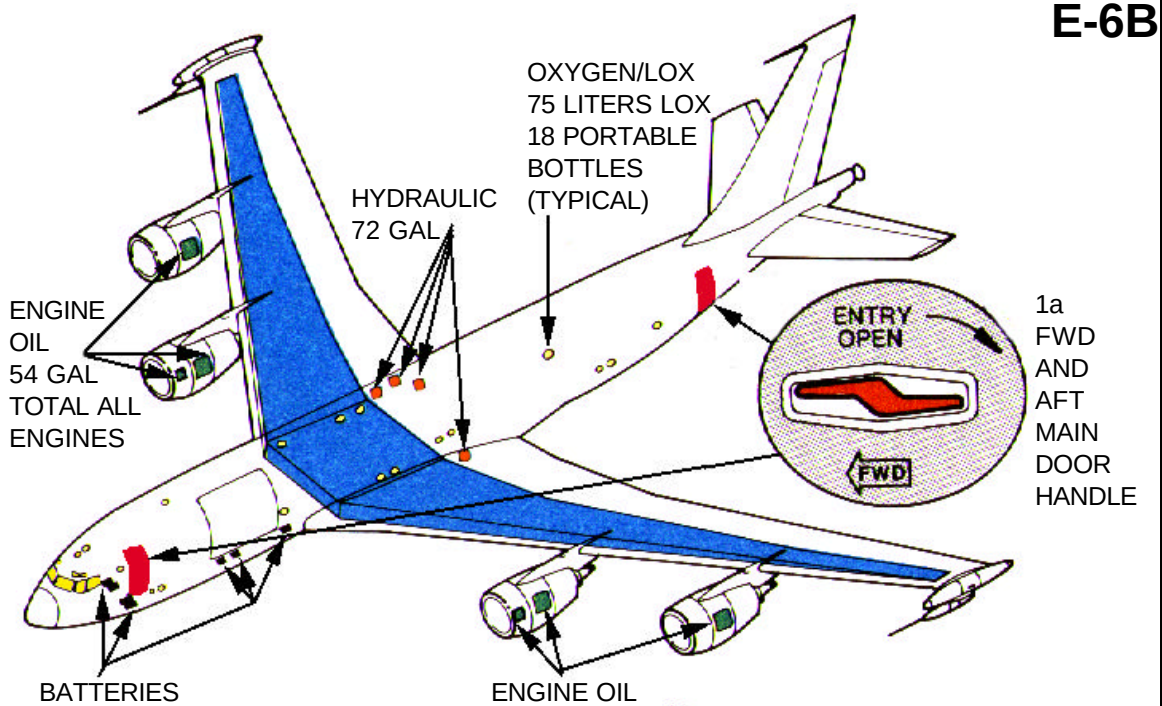

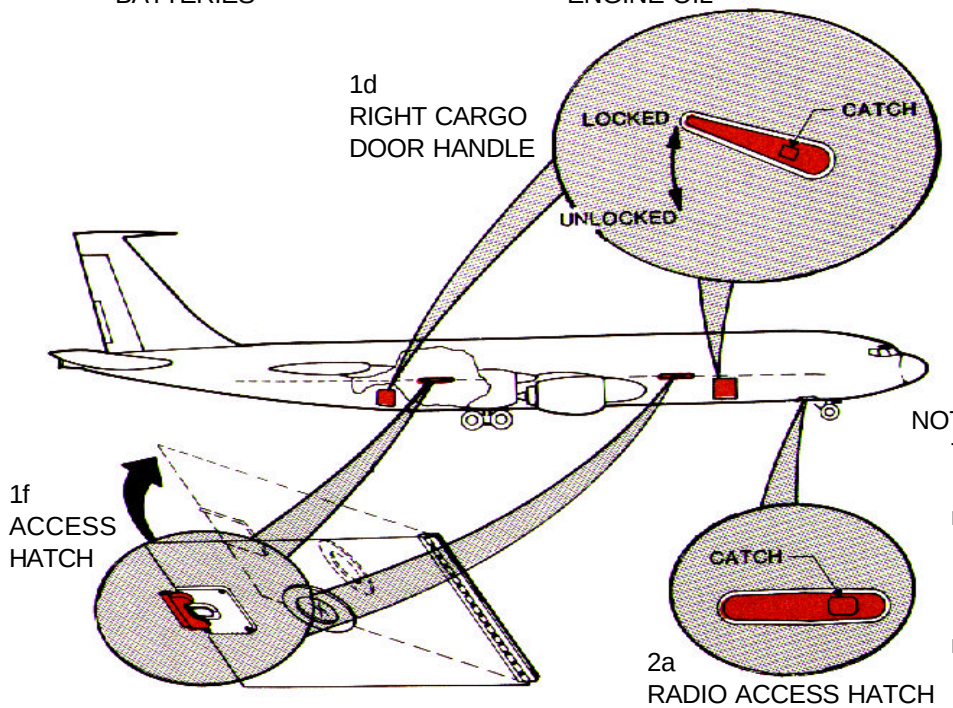

NOTE:

To gain entry to the main deck from the radio access door, proceed through compartment and open hatch to the main deck.

AIRCRAFT ENTRY-Continued

2. EMERGENCY ENTRY-Continued

WARNING

Rescue crews are at risk if the forward or aft doors to the main decks on the left side are opened from the outside, the escape slides/ chutes will deploy if they have not been disconnected from the inside.

Radio Access Door - Nose Landing Gear

a. Press catch to release handle.

b. Rotate handle counterclockwise and push door inward.

Emergency Exit Hatches - Over Wings

c. Push panel inward to unlatch

d. Push hatch inward and lift upward. Hatch weighs about 50 pounds.

Bailout Door - Right Hand Aft

e. Pull door handle out and rotate counter-clockwise.

f. Push door inward. Door is free-standing and weighs about 69 pounds.

3. CUT-IN

a. Cut in entry areas as indicated on graphic using power rescue saw or crash axe.

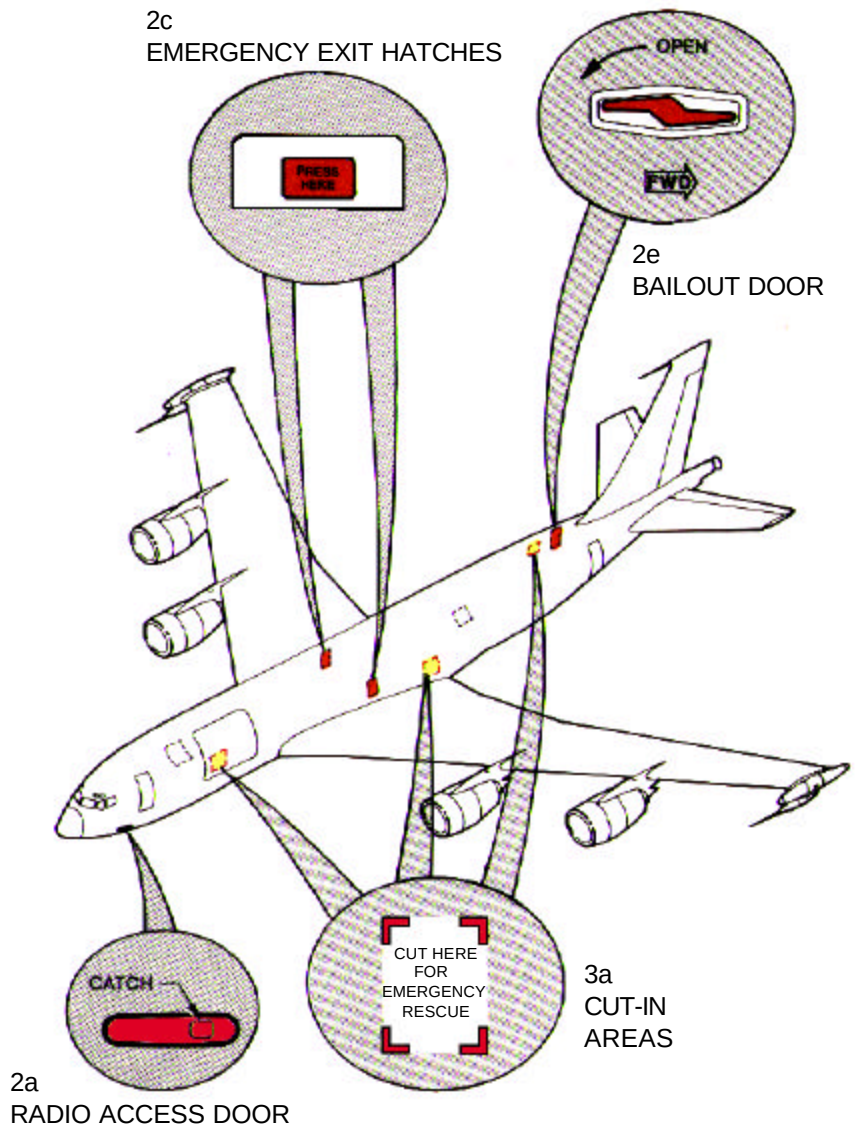

ENGINE/APU SHUTDOWN AND BATTERY DISCONNECT

1. ENGINE/APU SHUTDOWN

a. Retard throttles to full aft position.

b. Pull start levers aft and place in full down position.

c. Pull engine fire switches.

d. Pull APU fire switch.

e. Lift red guard and place battery switch down in OFF position.

2. BATTERY DISCONNECT

NOTE:
Batteries are located in the forward lower compartment accessible through the radio access door, labeled Battery Access.

a. To further deactivate the batteries, remove quick disconnect fittings, if time permits.

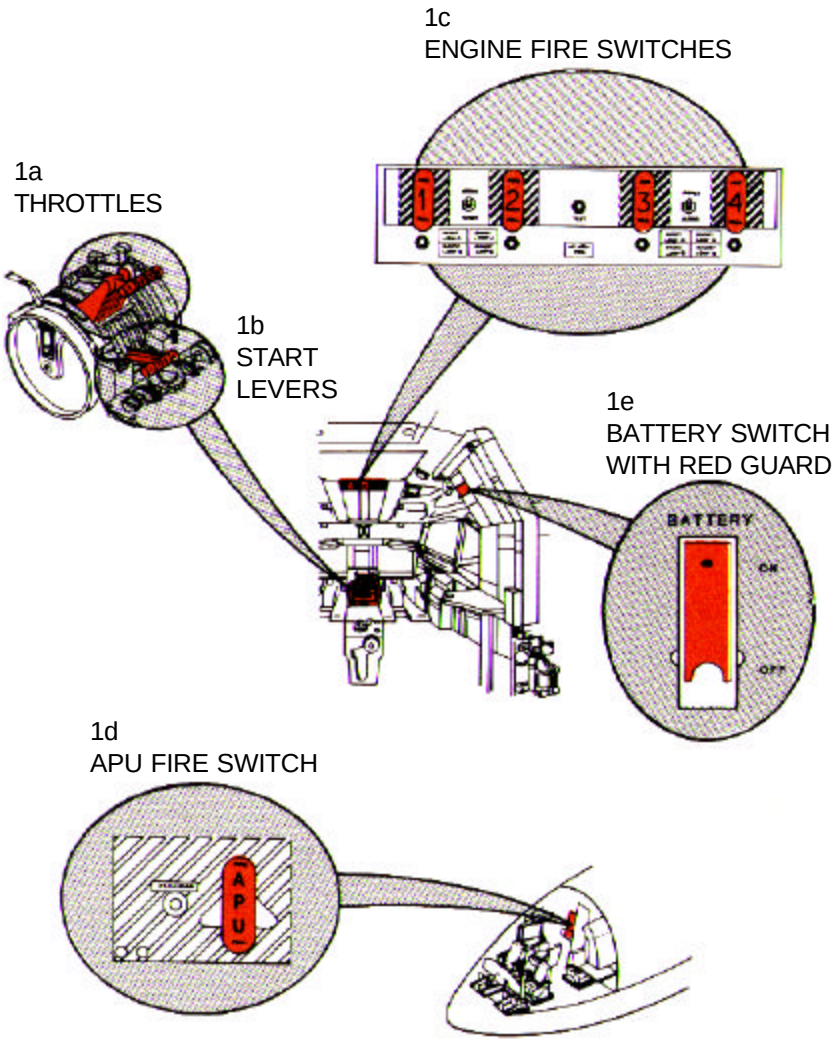

AIRCREW EXTRACTION

1. AIRCREW EXTRACTION

NOTE:

All crewmembers are attached to their seats by shoulder harnesses secured to lap belts equipped with quick disconnect buckles (rotary type). Aft facing crew rest seats are not equipped with shoulder harnesses; forward facing seats are so equipped. Both have quick disconnect buckles similar to the pilot's seat.

a. Rotate rotary release buckle in either direction to release shoulder harness, lap belt belt, and crotch strap.

FOR CREW REST SEATS

b. Rotate rotary release buckle in either direction to release shoulder harness and lap belt on forward facing seats or lap belt only on aft facing seats.

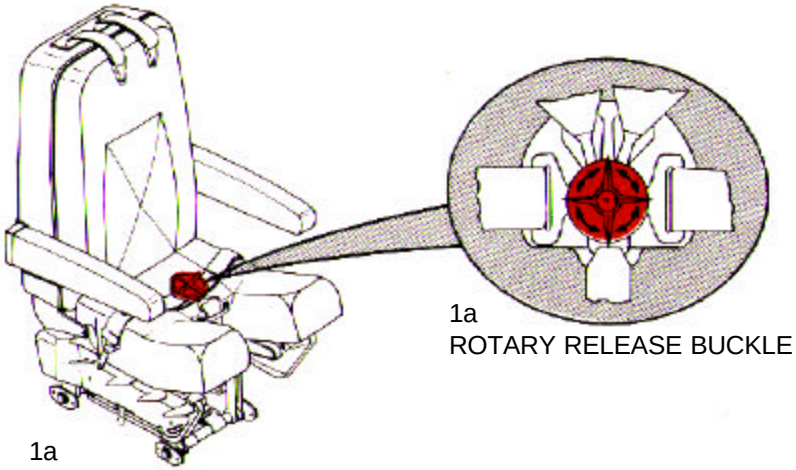

1a
ROTARY RELEASE BUCKLE

1a
CREW SEAT (TYPICAL)

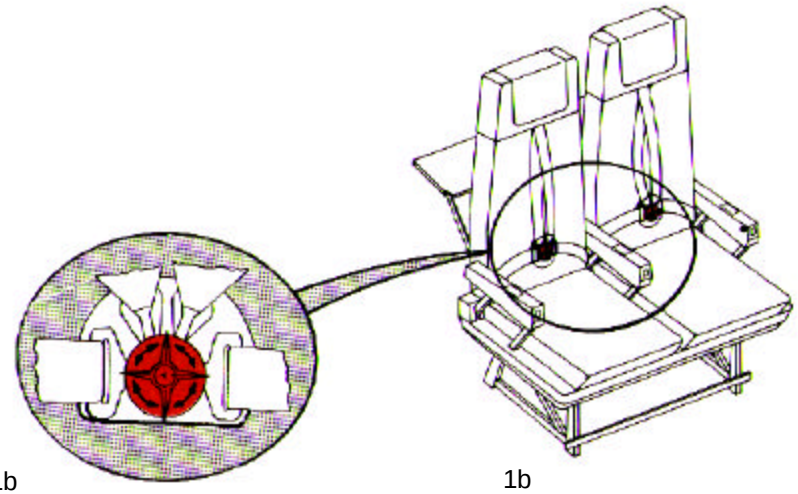

1b
ROTARY RELEASE BUCKLE

1b
CREW REST SEATS

AIRCRAFT DIMENSIONS AND HAZARDS

DIMENSIONS
LENGTH 59 FT 10 IN (18.24 m)
HEIGHT 16 FT 3 IN (4.95 m)
WING SPAN 53 FT (16.15 m)
WINGS FOLDED 25 FT 10 IN (7.87 m)

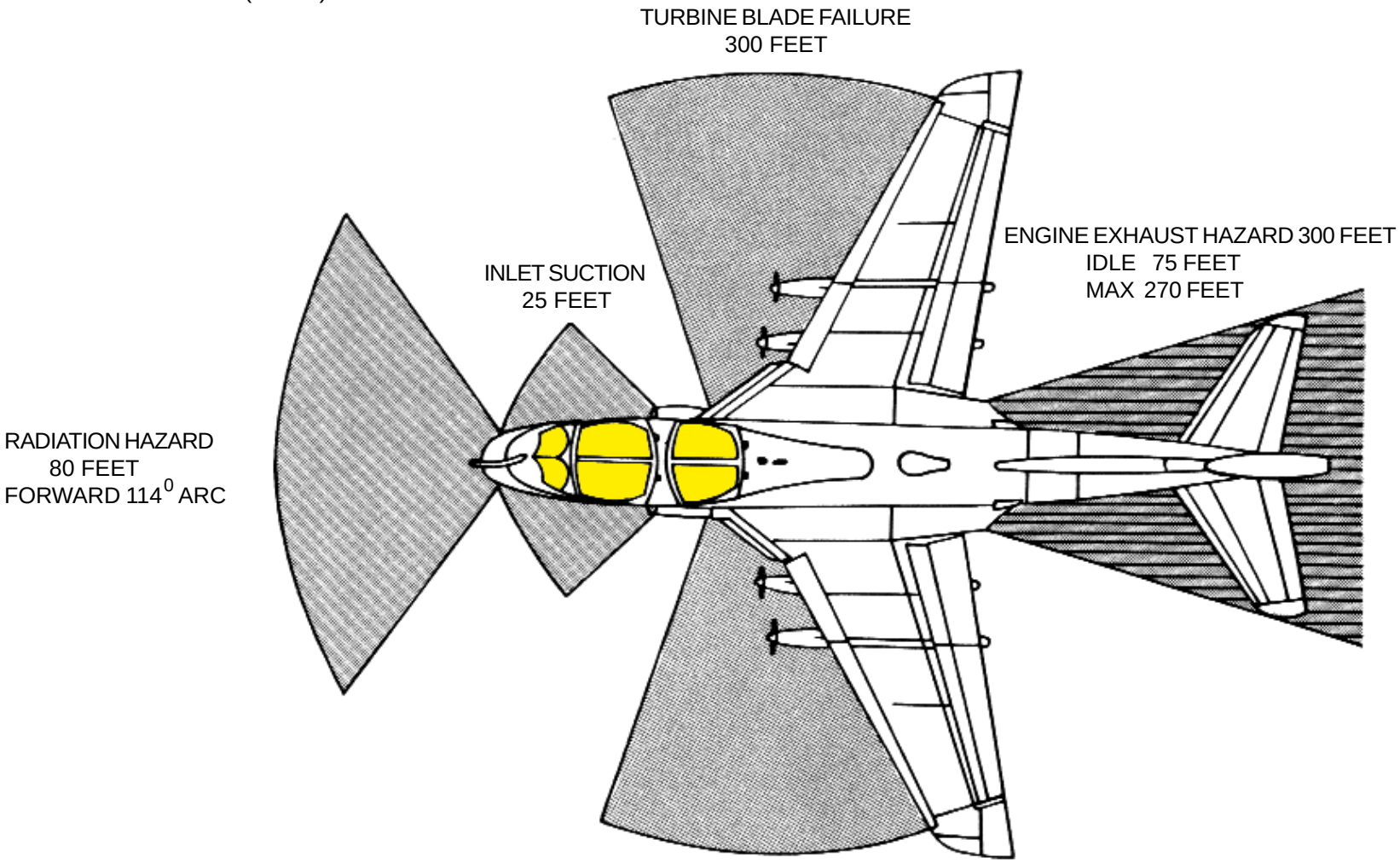

AIRCRAFT HAZARDS

ARMAMENT
4 Wing Stations
1 Fuselage Station
Chaff and Flares
Pylon Ejector Cartridges

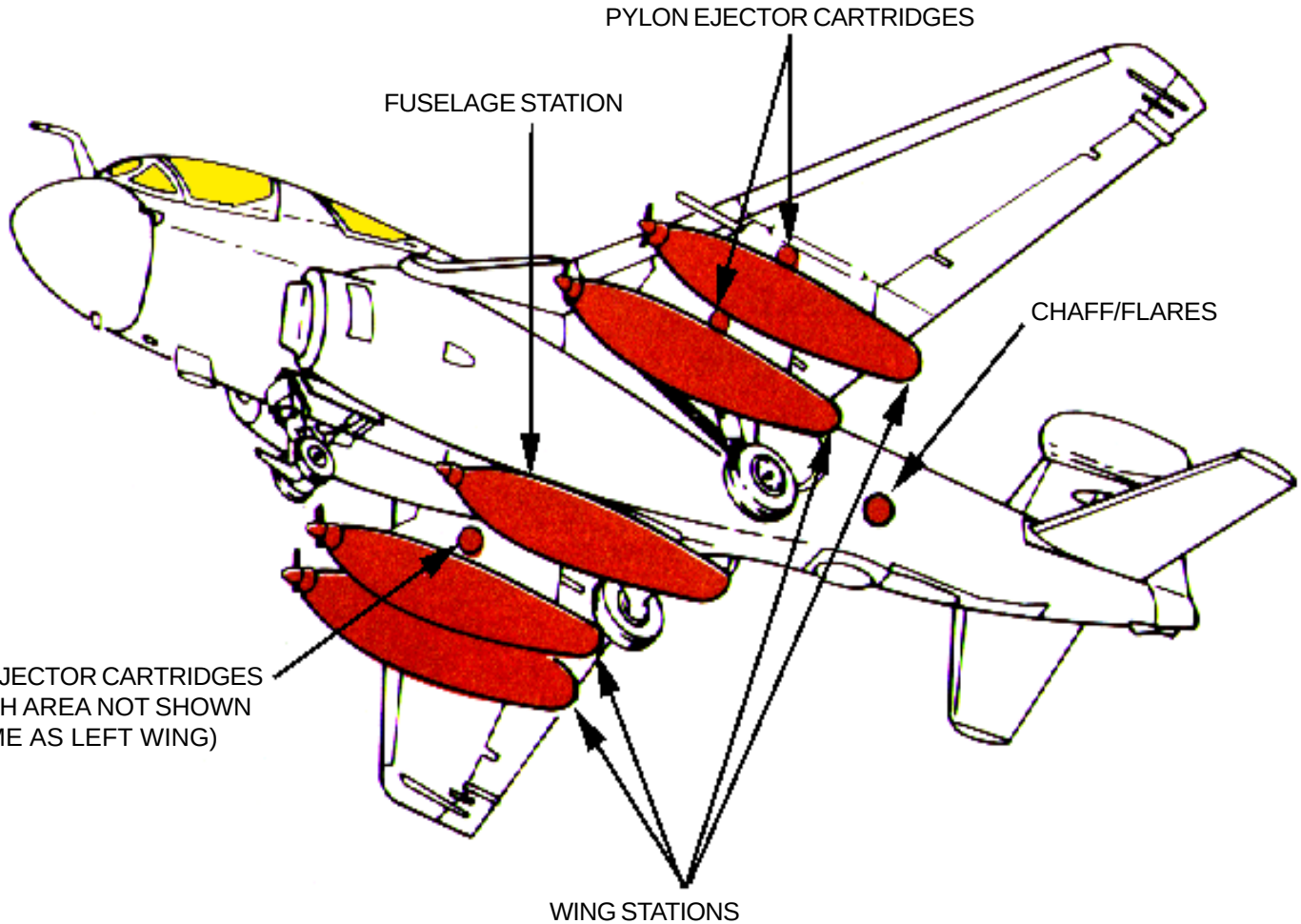

AIRFRAME MATERIALS

ALUMINUM

STEEL

OTHER

FIBERGLASS

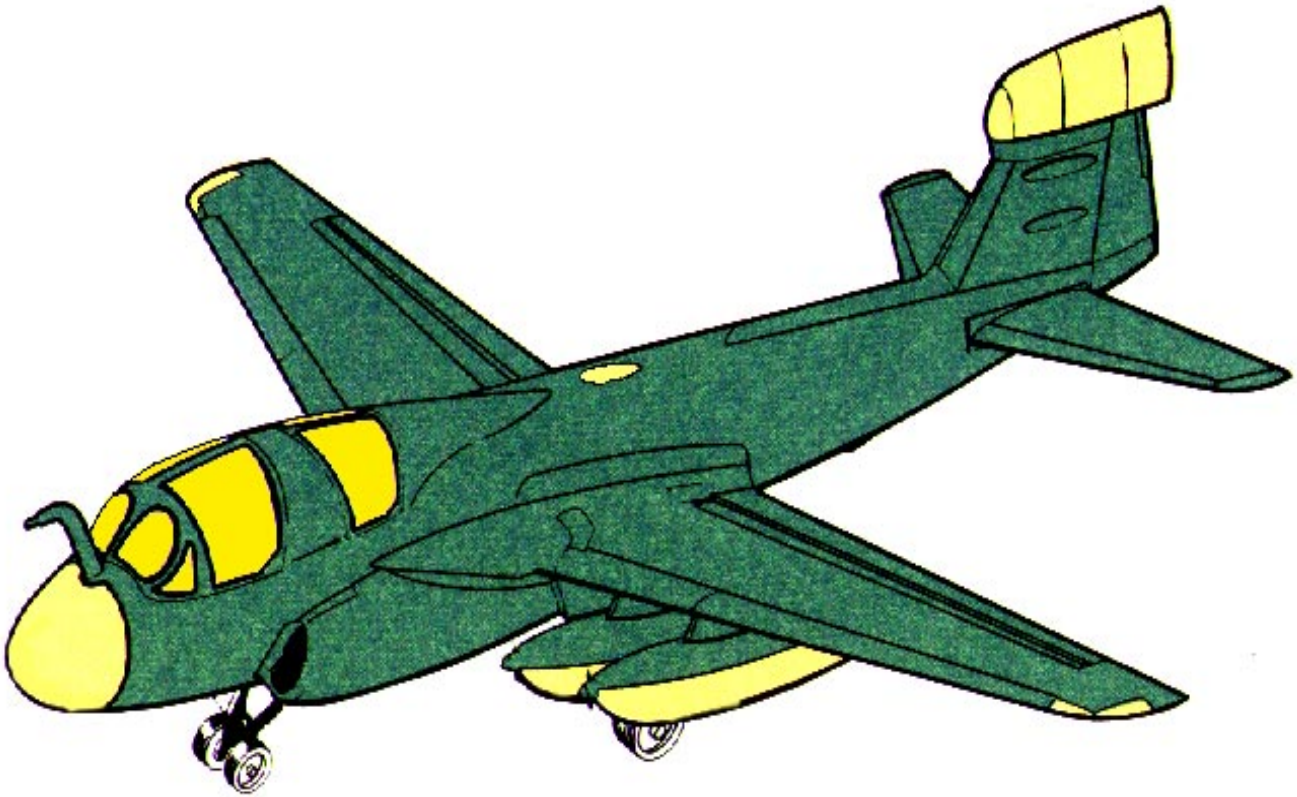

SPECIAL TOOLS/EQUIPMENT
Power Rescue Saw
Crash Axe
Fire Drill II
20 Ft Ladder

AIRCRAFT ENTRY

1. NORMAL ENTRY
a. Unlatch and lower boarding ladder.
b. Open canopies by rotating Canopy Contro Handle counterclockwise.
c. To enter forward cockpit, unlatch Hinged Boarding Platform, use platform step.

2. EMERGENCY ENTRY
a. Canopy Jettison Controls are located aft of engine intakes on either side.
b. Push thumb catch to lower canopy jettison access door.
c. Pull exposed Canopy Jettison Handle to jettison canopies.

3. CUT-IN
a. Canopies are acrylic plastic and may be cut with power rescue saw or crash axe.
b. Cut along canopy frames on all four sides.

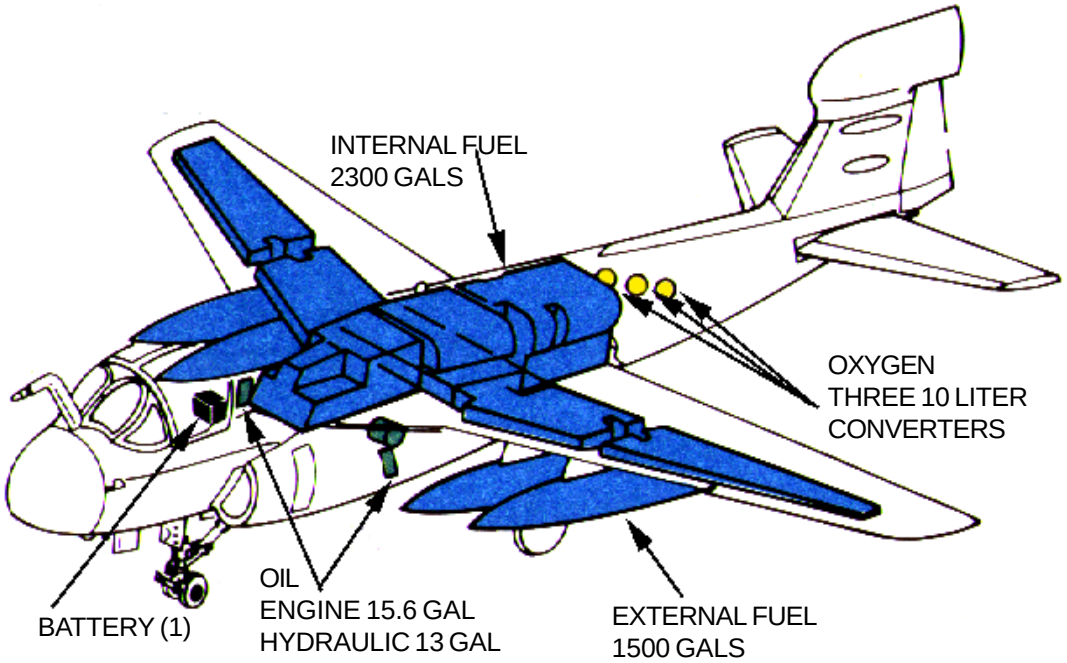

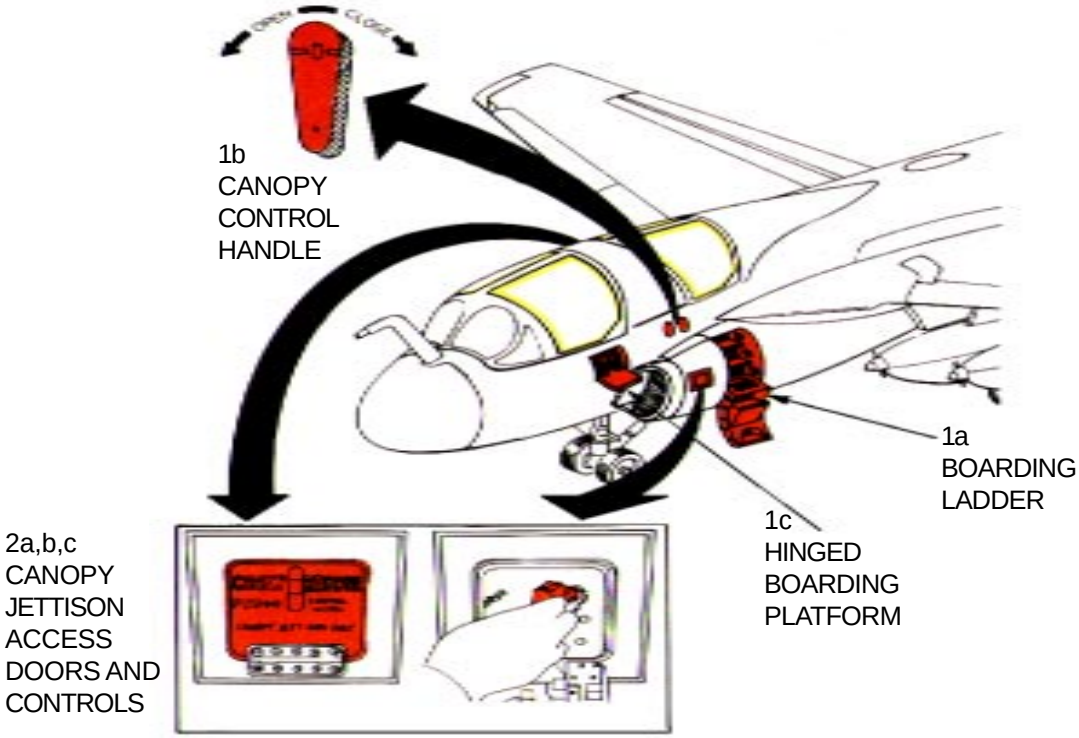

ENGINE SHUTDOWN AND CANOPY SAFETY

1. ENGINE SHUTDOWN

a. Retard throttles to the IDLE STOP position, then outboard (around the horn to the OFF position.

NOTE:

A stop in the thottle quadrant prevents simultaneous movement of both throttles to or from the off position. Only one engine at a time may be shut completely off.

b. Place Engine and Fuel Master Switches in the OFF position.

c. Place Master Generator Switches in the OFF position.

2. CANOPY SAFETY

a. The canopy may be safetied by inserting the Canopy Safety Lockpins in the forward and aft Canopy Jettison Handles located on the central instrument panel.

WARNING

Insertion of safety lockpins into the forward and aft canopy jettison handles DOES NOT eliminate jettison of the canopy by external emergency entry method. Emergency entry may still be accomplished with safety pins installed by using external emergency entry.

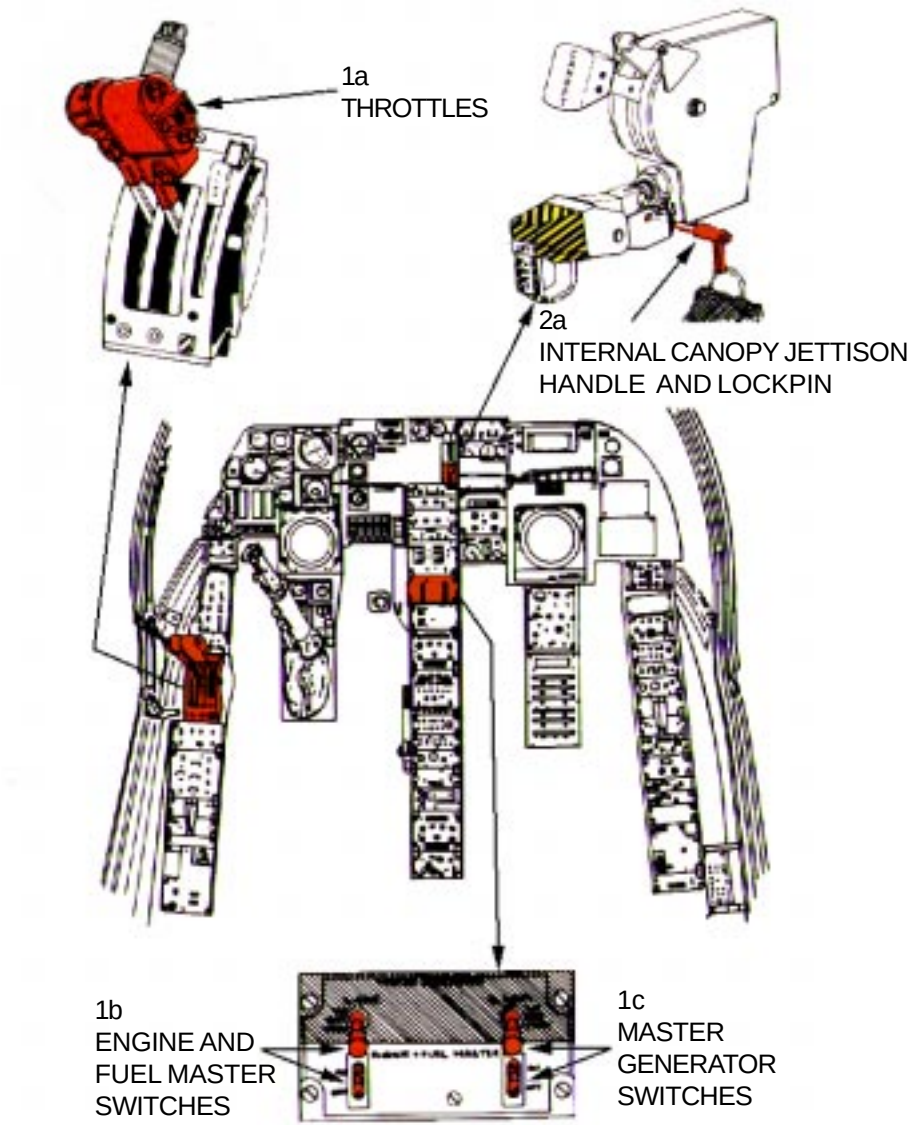

SEAT SAFETYING

NOTE:
The EA-6B is equipped with four Martin-Baker GRUEA-7 Ejection Seat.

1. NORMAL SEAT SAFETYING

NOTE:
Immediately upon gaining access to the aircraft cockpit, if time permits and no hazardous condition exists, proceed with normal seat safetying procedures.

a. Place Safety Flag, located top forward center of seat, in the UP/LOCKED position and insert safety pin. This safes the face curtain pull ring.

b. Rotate the Alternate Firing Handle Lock, located forward center of seat bucket, to the UP/LOCKED (vertical) position and insert safety pin. The safes the D ring.

c. Insert safety pin into the Gas Sequence Gas Generator (right hand of pilot's seat only) in multiseat aircraft only.

d. Insert Ejection Gun safety pin, located on aft top of seat, into the firing mechanism. This safes the rocket catapult.

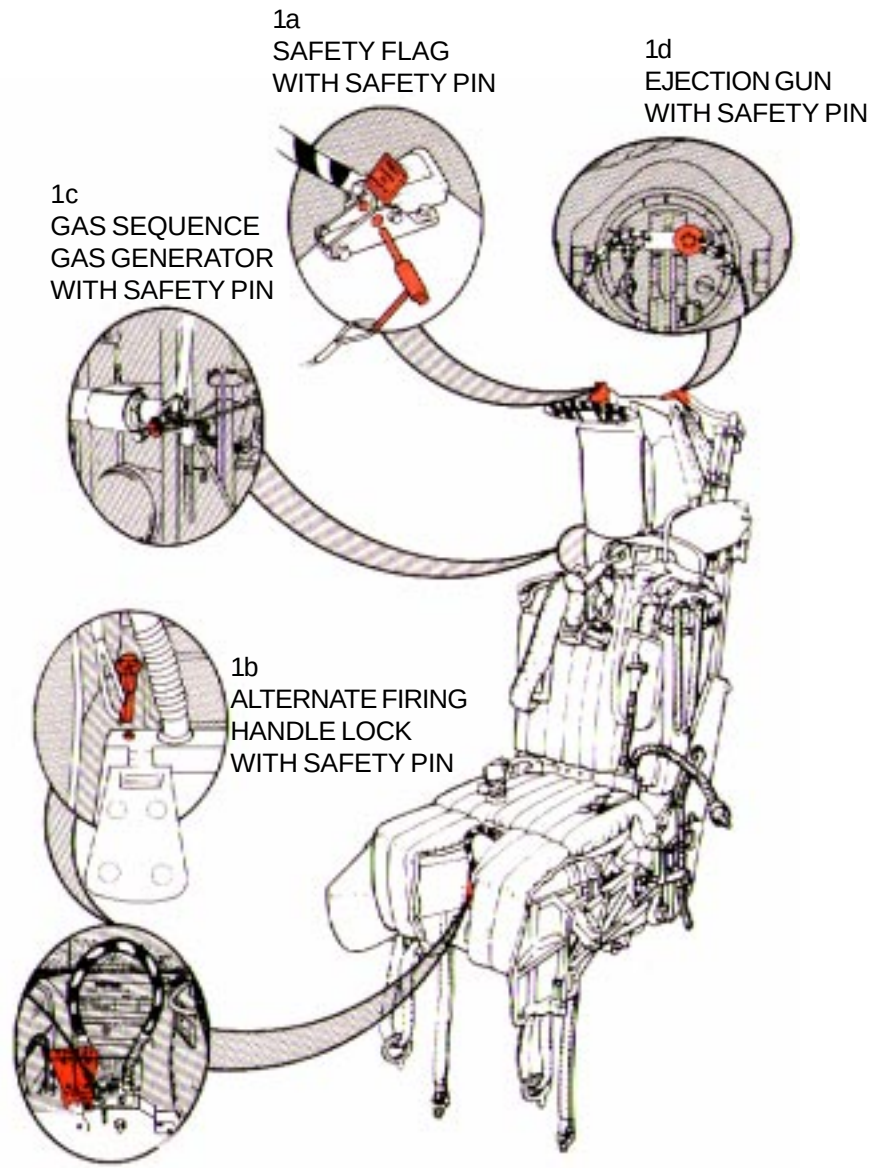

SEAT SAFETYING-Continued

1. NORMAL SEAT SAFETYING-Continued

e. Insert the safety pin into the Drogue Gun, located on the upper left side of seat.

f. Insert safety pin into the Rocket Motor Initiator Firing Mechanism Sear, located on the upper left side of seat near the Droque Gun.

g. After removing crewmember, insert Lock Assembly into the Emergency Release Handle, located the forward right hand side of the seat.

WARNING

In multi-seat aircraft, all ejection seats must be safetied due to command ejection possibility. (This component will sequence all seats for ejection.)

WARNING

When removing personnel from ejection seats, do not allow crewmembers or rescue personnel to become entangled in lower seat ejection handle or use the face curtain handle as a support or hand hold.

2. EMERGENCY SEAT SAFETYING

a. Comply with the first three steps of Normal Seat Safetying procedures on page EA-6B.6.

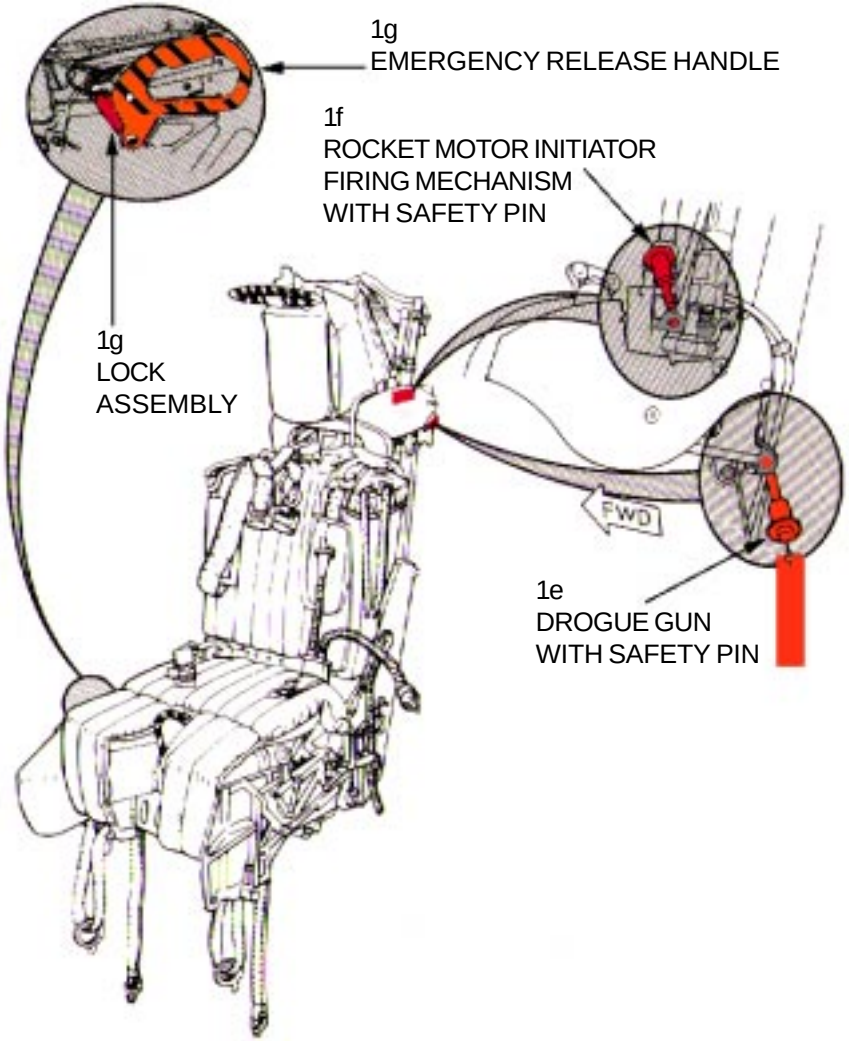

AIRCREW EXTRACTION

3. AIRCREW EXTRACTION

NOTE:

The crewmember is attached to the ejection seat by the use of an integrated harness and leg restraints (at thighs and ankles). Additionally, the oxygen/communication lead and anti-G suit hose are attached to the personnel services block on the left side of the seat.

a. Remove oxygen mask by pulling down on release tabs on either side of the mask.

b. The oxygen/communication lead is joined by a positive locking ring, located on the lower aft left side of the seat. Pull up on collar while pulling apart the connection.

c. Disconnect the anti-G suit hose, located on the lower aft left side of the seat, by pulling hose from personnel services block disconnect.

d. Release the leg restraint lines by pulling the leg line snubber release lever located on the outer side of each snubber box.

e. Release the two lap belts by squeezing the latch and release bar simultaneously.

f. Release the two shoulder harness koch fittings by squeezing the latch and release bar simultaneously for each fitting.

4. EMERGENCY RELEASE

a. Squeeze Emergency Restraint Release Handle and rotate aft. This releases lap belts, shoulder harnesses, and leg restraint lines.

NOTE:

Survival kit and parachute will remain attached to crewmember and will have to be disconnected manually before extraction to avoid more effort and possible delay in the rescue process.

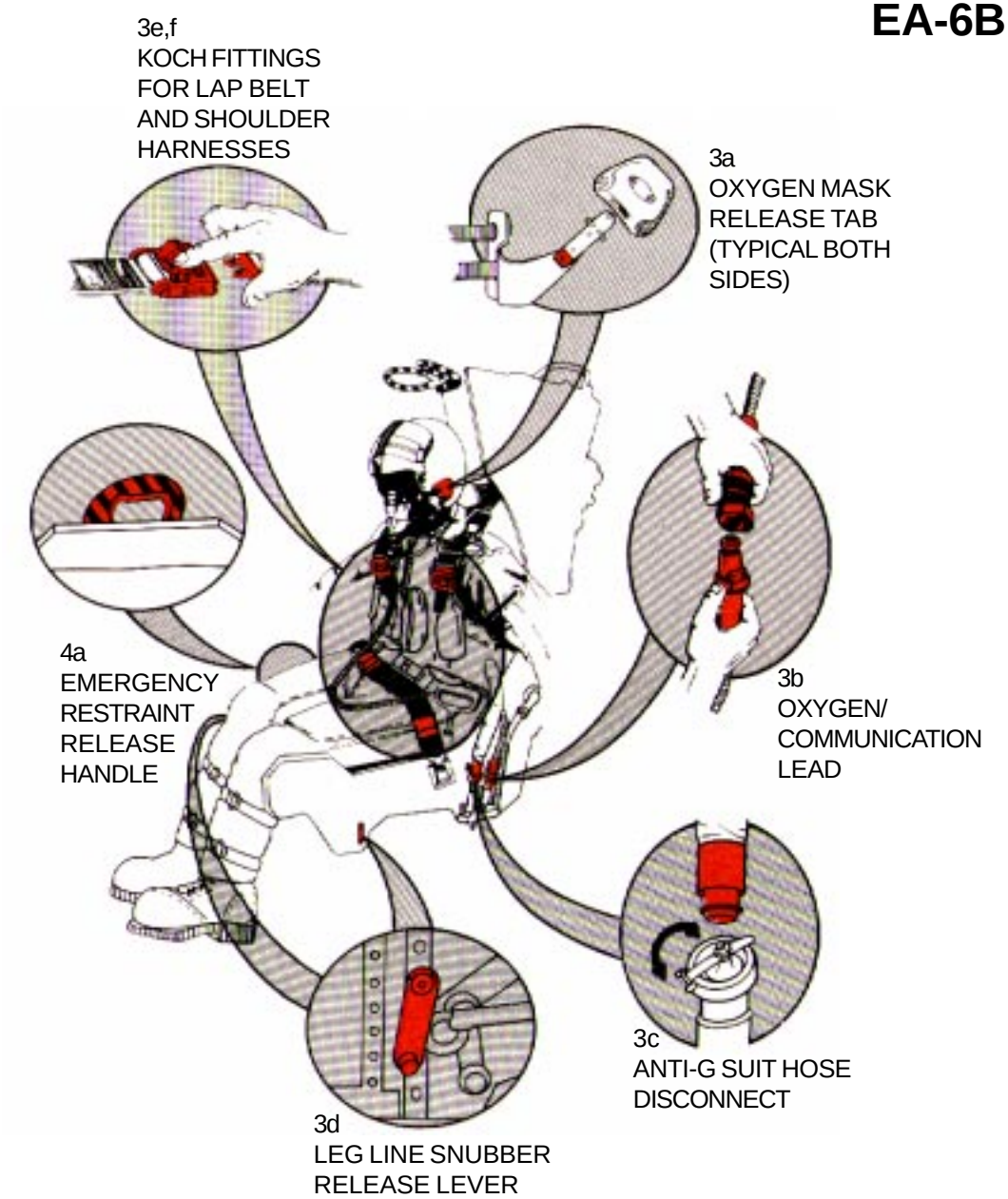

AIRCRAFT PAINT SCHEME

AIRCRAFT DIMENSIONS

NOTE

- DIMENSIONS GIVEN AT FULL WEIGHT
- HEIGHT AND GROUND CLEARANCE INCREASES 4 TO 6 INCHES AT EMPTY WEIGHT
- MISSION RADOME GROUND CLEARANCE IS 1 FOOT 7 INCHES

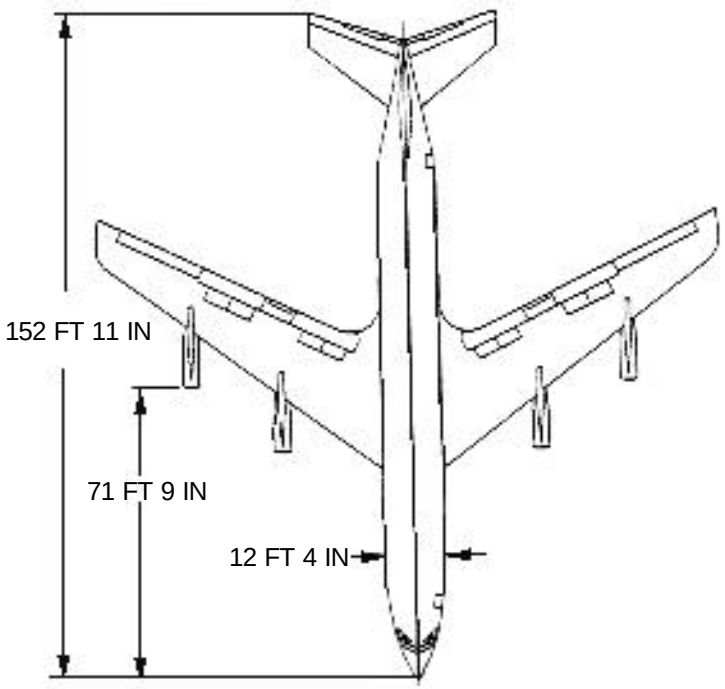

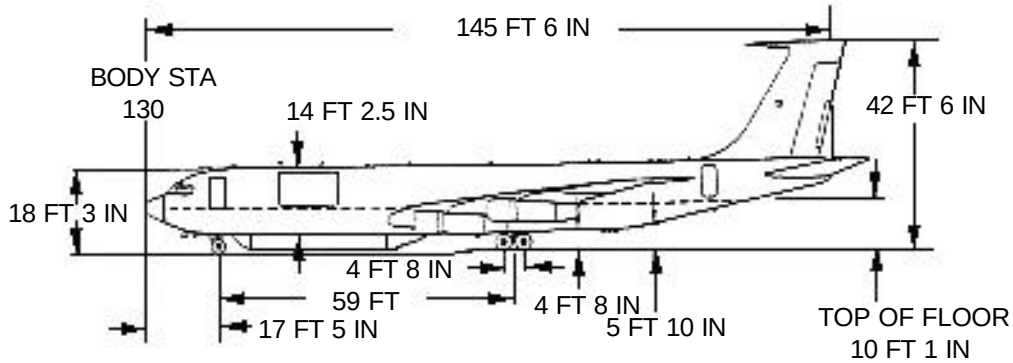

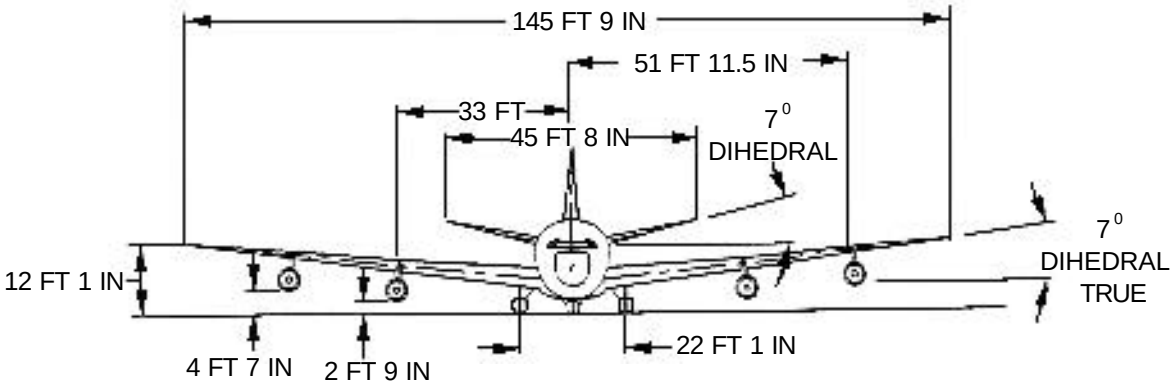

AIRCRAFT HAZARDS

NOTE:

Skin penetration could be hazardous to the crew and passengers of this special purpose aircraft. Use Fire Drill 2 at marked areas only. For the engines, penetrate through the fire extinguisher panels. See page C-135.1.

WEATHER RADAR RADIATION AREA

WARNING

If weather radar is operating:

- 60 foot area is hazardous to personnel. Over exposure could result in sterility.
- Within 100 feet of nose radome area for possible fuel vapor ignition to any equipment being refueled or defueled and detonation of ungrounded electro explosive devices.

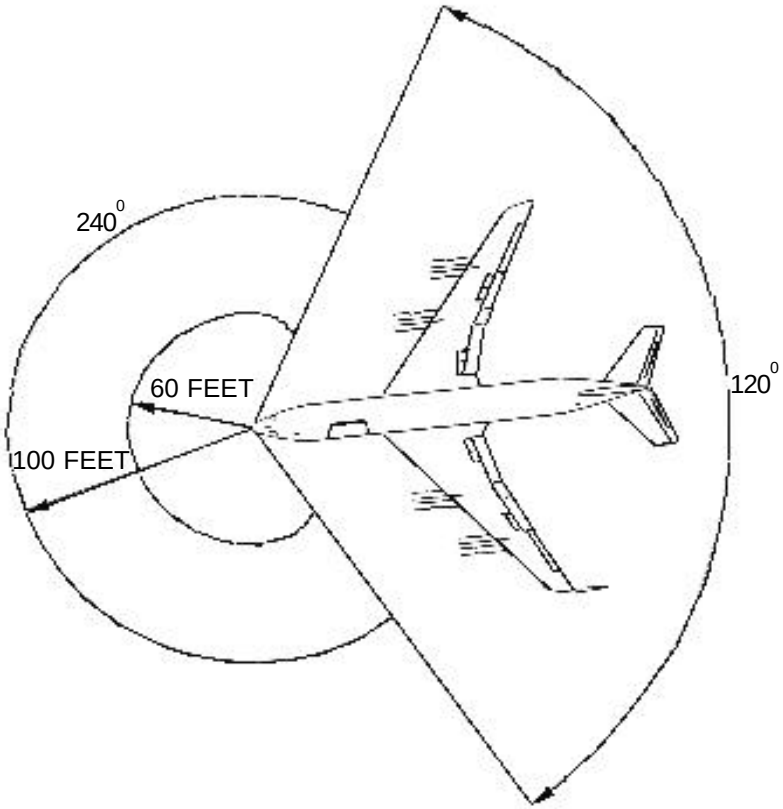

ANTENNA LOCATIONS

WARNING

Operating distances indicated in FEET that can ignite fuel vapors. If operating, safe personnel limit is FEET. Transmission could cause shock. If mission radar is operating, distance is 1,000 feet.

1. GLIDESCOPE
2. TACAN/UHF {200} [4]
3. VHF AM/FM {200} [4]
4. ADF LOOP
5. IFF/UHF {200} [4]
6. MISSILE WARNING SYSTEM
7. GPS
8. RAP HDIS
9. SDS/TACAN
10. UHF L-BAND
11. X-BAND TRANSPONDER
12. SCDL (2) {200} [15]
13. RAP HDIS
14. UHF/JTIDS {200} [3]
15. ELT
16. VOR/ILS
17. HF PROBE (2) {200} [10]
18. UHF (5) {200} [4]
19. RADIO ALTIMETER (4)
20. SDS/JTIDS
21. SINCGARS (GROWTH)
22. ADF SENSE
23. MARKER BEACON
24. JOINTS STARS RADAR
25. IFF
26. WEATHER RADAR

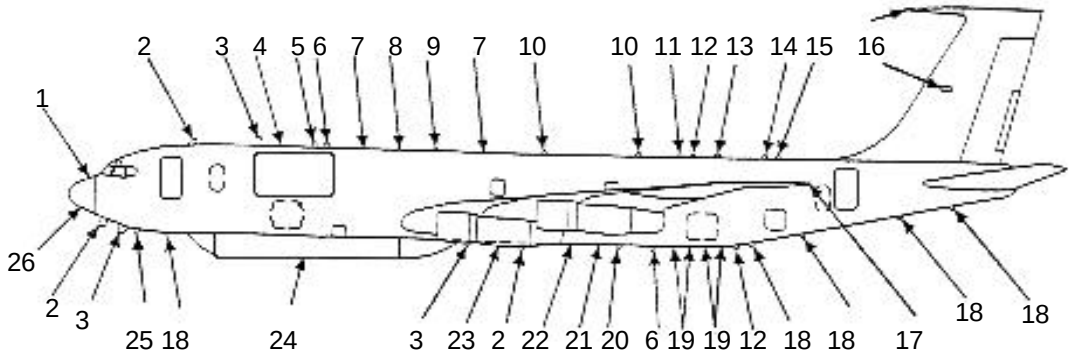

AIRCRAFT HAZARDS-Continued

HYDRAULIC SYSTEM

- There are two hydraulic systems; auxiliary and utility systems normally operate at 3,000 PSI.
- No. 1 auxiliary reservoir is located in the left wheel well.
- No. 2 auxiliary reservoir is located in the right wheel well.
- Quantity is 3.2 gallons of SKYDROL LD-4. This fluid is toxic and flammable. Face shield, gloves, and area ventilation is required. Avoid contact with skin, eyes, and clothes or injury will result.
- The utility reservoir, holding 6.9 gallons, is located in the left main wheel well.

OXYGEN SYSTEM

- There is a single oxygen system supplying oxygen for both the flight and mission crews.
- Liquid oxygen is stored in a 75-litre capacity converter, equipped with a shutoff valve, located on left side fuselage in the aft cargo compartment.
- There are 34 portable oxygen bottles located throughout.
- Each bottle is charged to at least 290 PSI.

OIL SYSTEM

- Engine oil systems are normally serviced with MIL-L-7808 oil which is toxic. Use face shield, gloves, and ventilate area where present.

PNUEMATIC SYSTEM

- There is an emergency brake air bottle, charged to 1,200 PSI, located forward in the nose wheel well.

GALLEY HAZARDS

- Located on left side between forward main door and crew rest seats. An oven, electrical wiring, possible microwave oven, two coffee makers with hot and cold water dispensers, two hot cups for heating liquids, and two dual-temperature refrigerator-freezers are fuel vapor ignition sources.

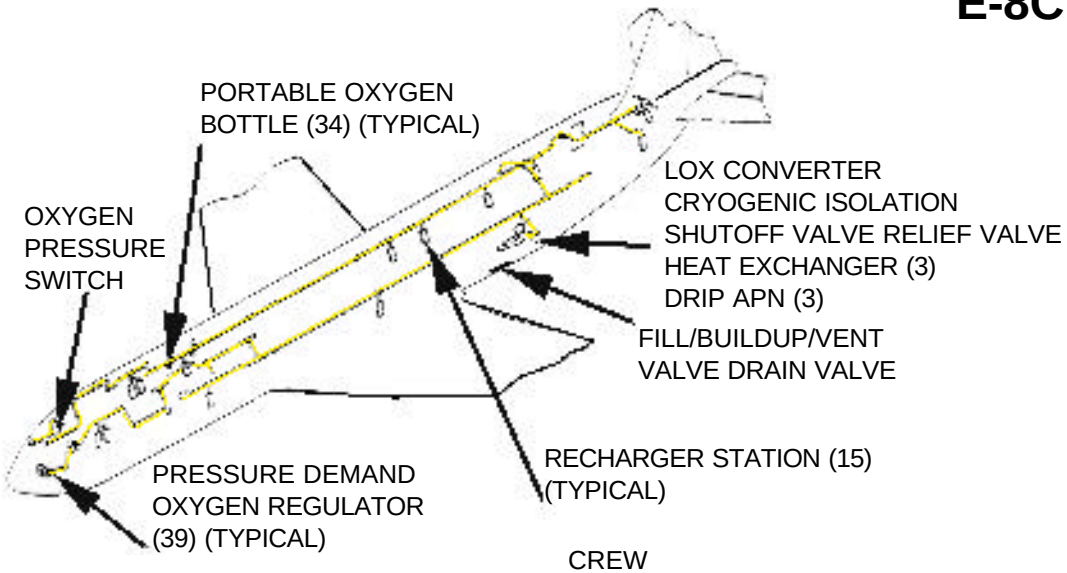

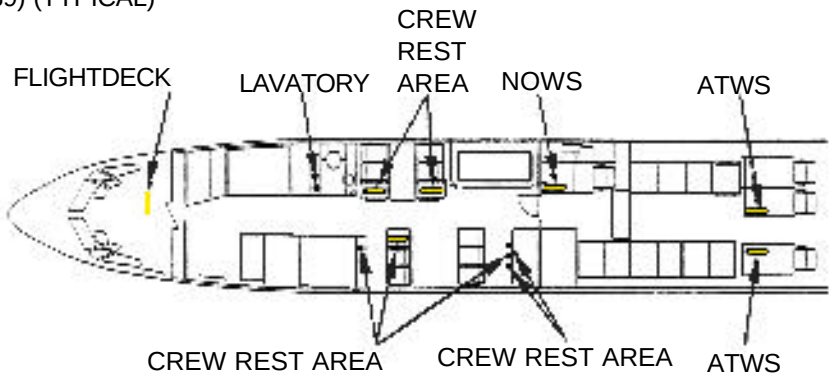

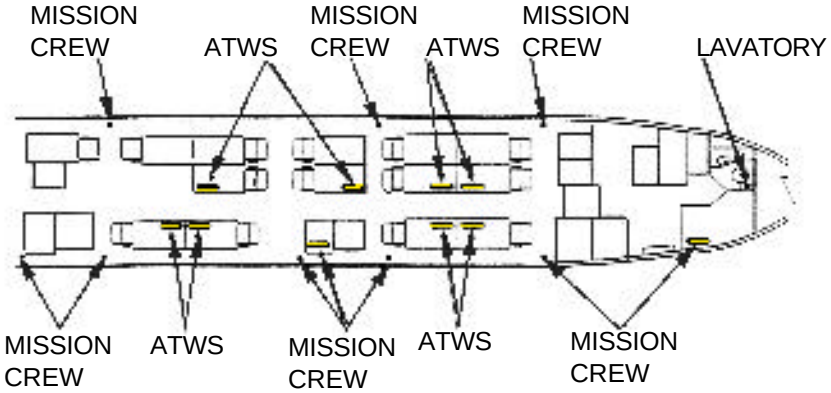

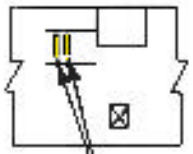

FWD LOWER COMPARTMENT

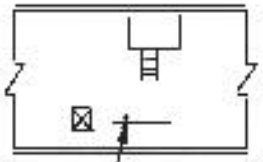

AFT LOWER COMPARTMENT

AIRCRAFT HAZARDS-Continued

FUEL TANK LOCATIONS AND QUANTITIES
- Fuel type is JP-8
- US Gallons

AIRCRAFT BATTERY
- 24 Volt Lead Acid
- Located on an extendable mount in a compartment in right lower nose section.

APU BATTERY
- 24 Volt Nickel Cadium
- Located in right wheel well on aft bulk-head (station 960) below electronic control box.

APU (GAS TURBINE)
- Located in aft lower compartment and is enclosed in a fireproof shroud.

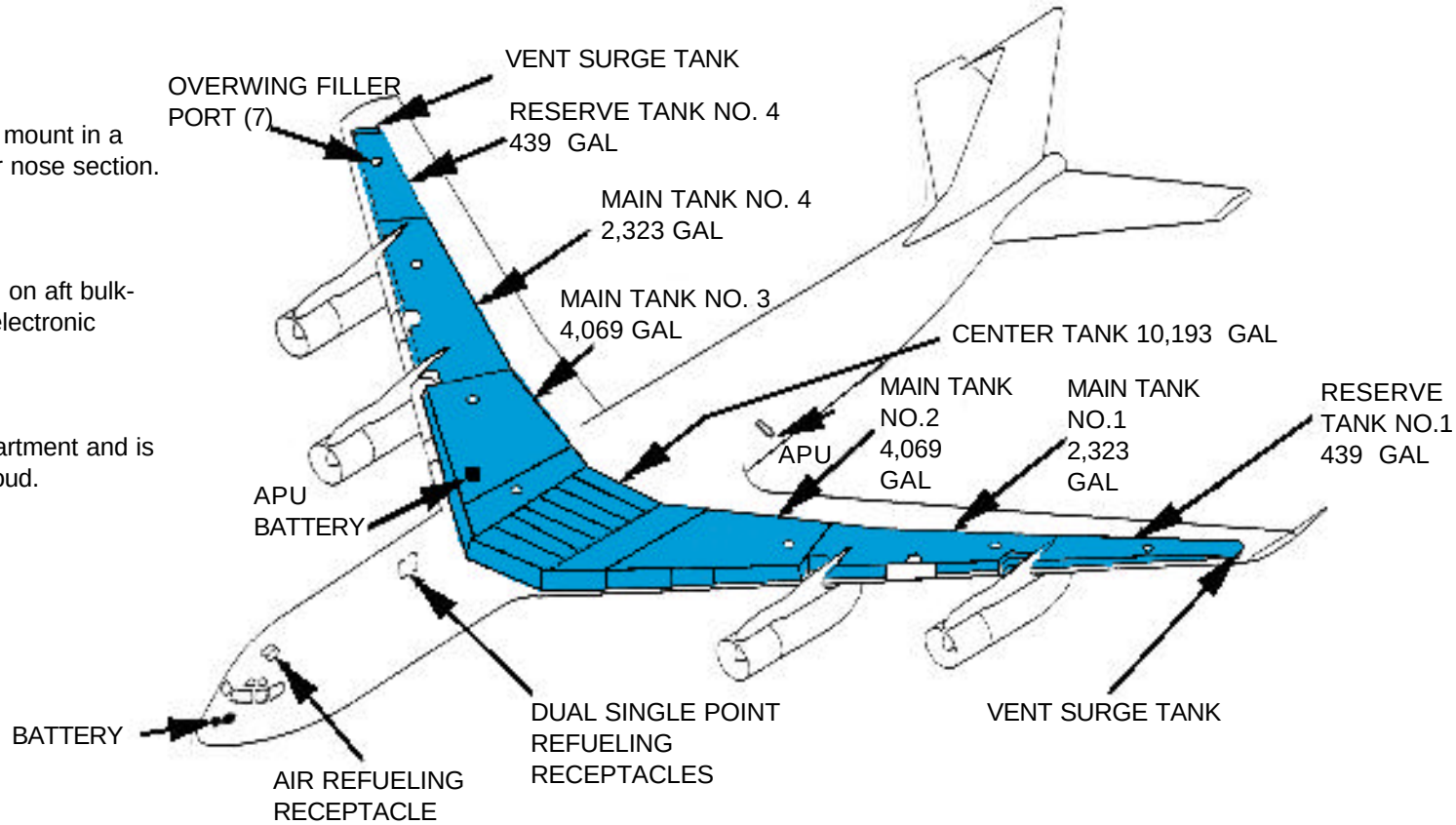

SPECIAL TOOLS/EQUIPMENT
Power Rescue Saw
25 Foot Ladder
Fire Drill 2

AIRCRAFT ENTRY

1. NORMAL ENTRY
a. To open entry doors, located left forward and left aft fuselage, pull external handle outward and rotate clockwise.
b. Pull door outward.

2. EMERGENCY ENTRY

a. Same as NORMAL ENTRY doors.
b. To open cargo doors, located forward and aft right fuselage, press catch on release handle.
c. Pull handle down to unlock door.
d. Push door in and slide door forward.
e. To open bailout door, located aft of cargo doors, and pull external handle outward and rotate counterclockwise.
f. Pull door outward.
g. To open electronic compartment door, located forward of nose gear, press catch to release handle.
h. Rotate handle counterclockwise.
i. Push door inward.
j. To open hatches, located over and just aft of either wing, push in panel.
k. Push hatch inward.
l. Co-pilot's sliding window can be opened from the outside for entry.

NOTE:
Some doors are pushed inward to release from fuselage opening. Leaving door or hatch in opening will impede rescue.

3. CUT-IN

a. Cut-in only at indicated marked area.

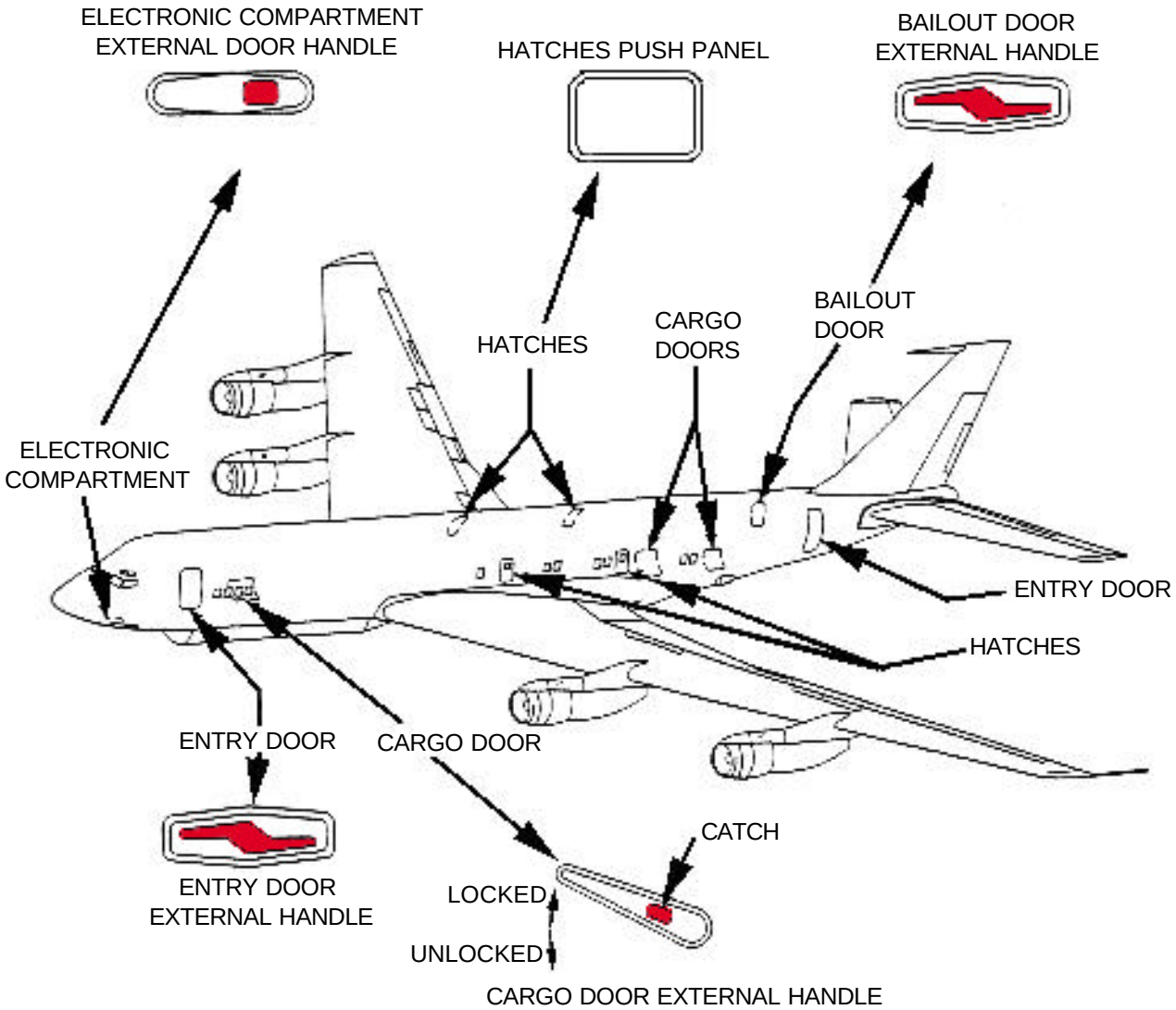

ENGINE AND APU SHUTDOWN

4. ENGINE SHUTDOWN

NOTE:
Aircraft is equipped with thrust reversers.

a. Place engine thrust lever friction handle, located on control stand, to aft position, then retard engine thrust levers to IDLE position.
b. Place engine start levers, located on lower portion of control stand, down to CUT-OFF position.
c. If no engine or APU fire, proceed to step f.
d. If an engine or APU fire is observed or indicated, pull engine fire switches or T-handles, located on pilot's instrument panel and APU T-handle on cabin APU panel, OUT to discharge agent.
e. Press the engine or APU fire discharge buttons and hold for 2 seconds. Engine buttons are located top of pilot's center instrument panel. APU button is located on the aft bulkhead right of cabin door on APU panel or remote panel located on left side fuselage aft of left wing root.
f. Place guarded battery switch, located on upper left flight engineer's panel, to OFF.

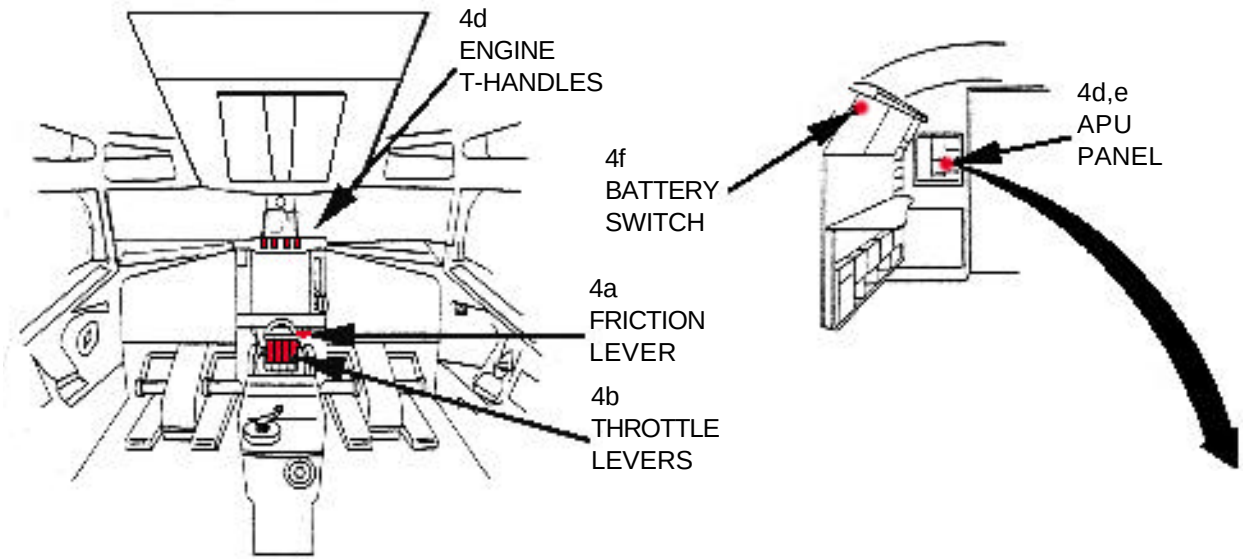

APU CONTROL PANEL

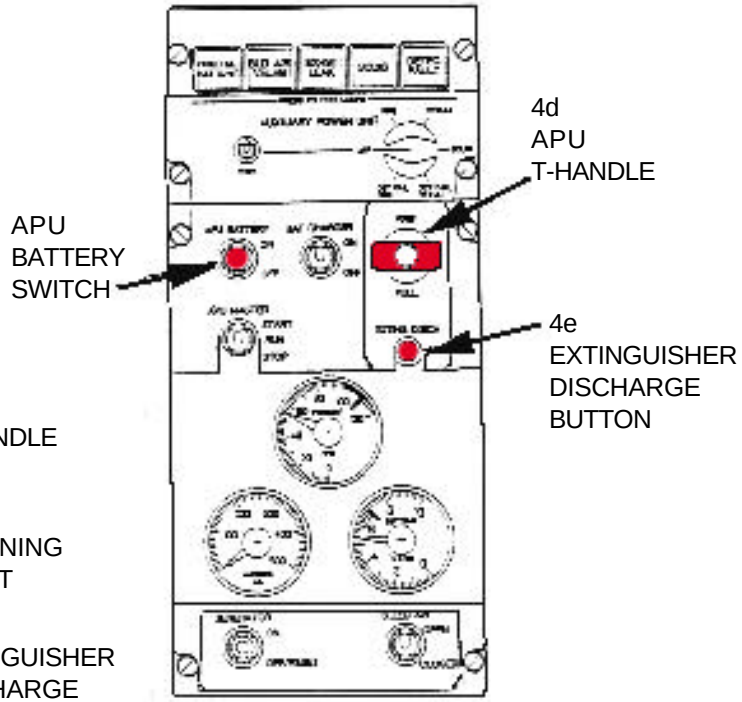

REMOTE APU PANEL

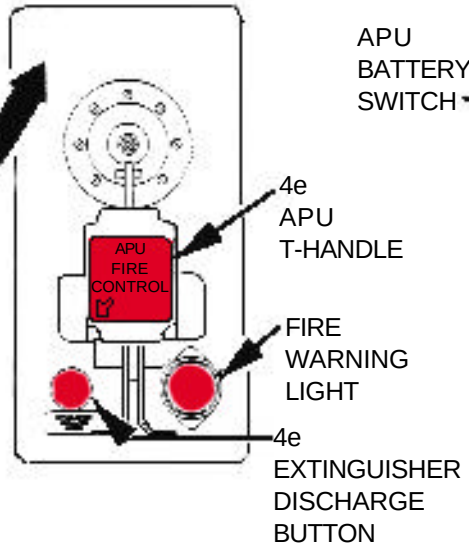

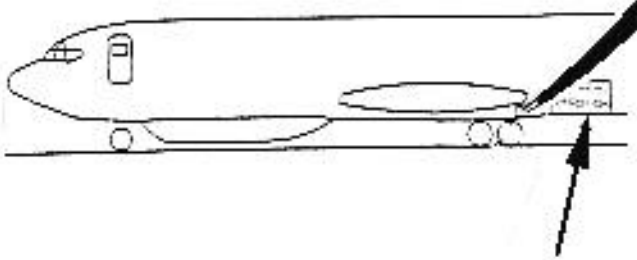

AIRCREW EXTRACTION

5. AIRCREW EXTRACTION

NOTE:
Flightdeck seating arrangement is the same for C/KC-135 aircraft.

a. The pilot, co-pilot, flight engineer, navigator, and observer seats are all equipped with a seat belt and inertia reel shoulder harness.
b. To release crewmember from seat, turn the single release rotary buckle.
c. To release the shoulder harness only, press the black tap on the rotary buckle.
d. For easier extraction, the seats have various adjustments; tilt, horizontal, and vertical. These adjustments are located on the right side of the seat except for the co-pilot and flight engineer which are on the left side.
e. There are twelve crew rest seats, located just aft of forward lavatory (see page E-8C.2), are equipped with seat belts only.
f. There are three crew rest bunks, located aft of left side crew rest area (see page E-8C.2), are equipped with seat belts.
g. Passenger seats are equipped with seat belts only.
h. The aircraft has three lower compartment interior access hatches. Personnel may be found in these areas at any time.

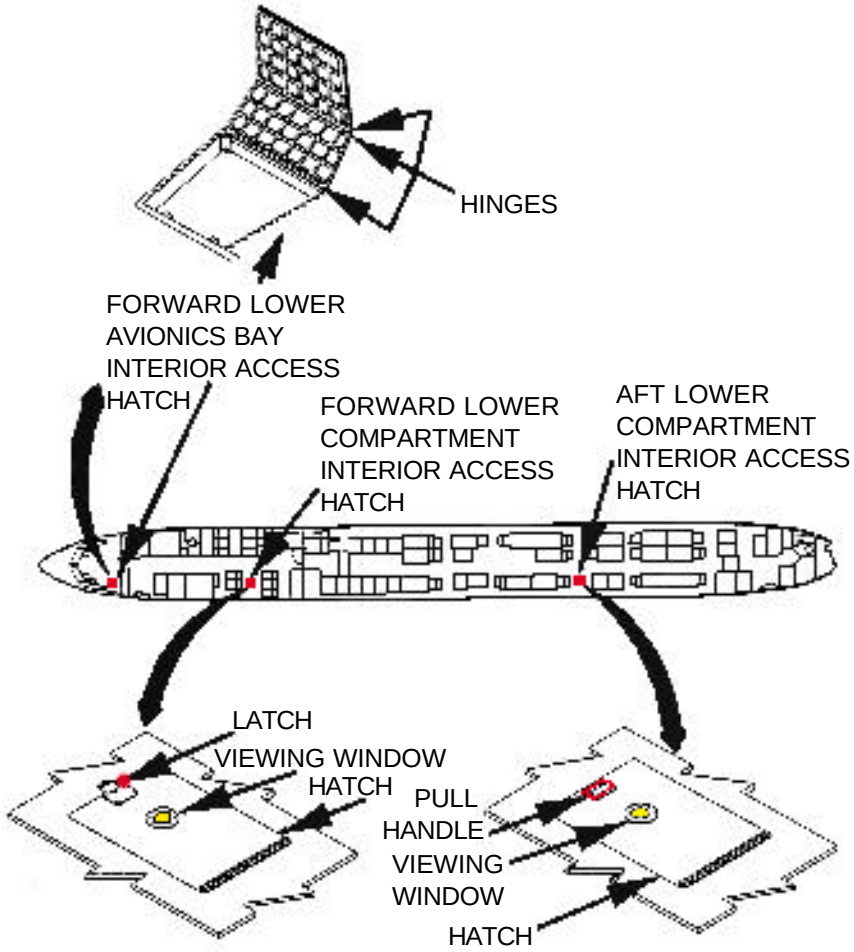

AIRCRAFT INTERIOR ARRANGEMENT

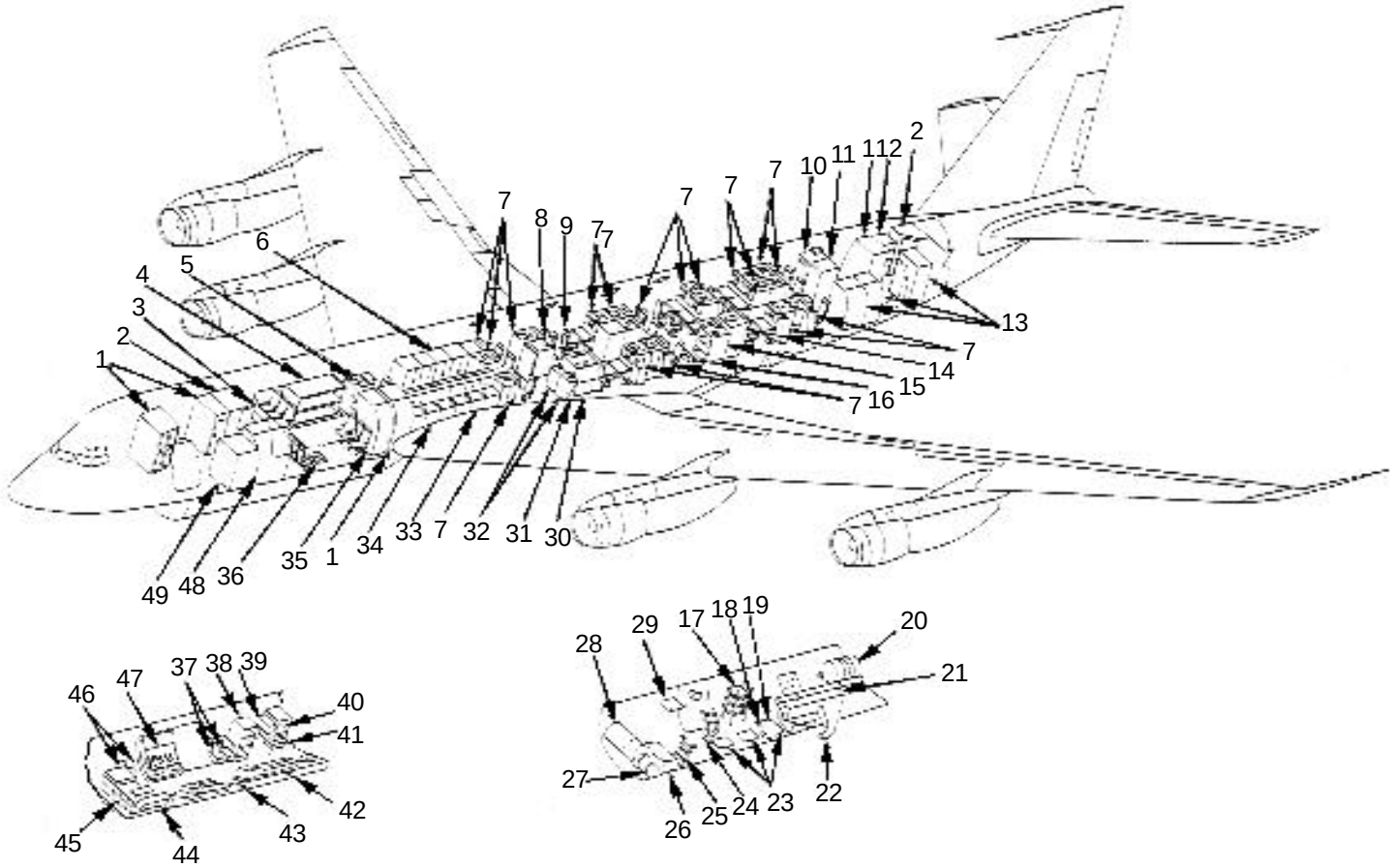

1. STORAGE
2. LAVATORY
3. CREW REST TABLE
4. CREW BUNKS
5. NOWS CONSOLE
6. COMM RACKS 2-5
7. OWS CONSOLES
8. DATA RACK 7B
9. EMERGENCY EQUIPMENT RACK
10. DATA RACK 7A
11. DATA RACK 8
12. SAFE
13. BAILOUT EQUIPMENT STORAGE
14. DATA RACK 5
15. DATA RACK2
16. AFT LOWER COMP. ACCESS HATCH
17. 400-60 HZ CONVERTER
18. EMERGENCY EQUIPMENT PANEL
19. LIQUID OXYGEN BOTTLE
20. PORTABLE WATER TANK
21. VAPOR CYCLE
22. VAPOR CYCLE INLET
23. LOX HEAT CONVERTERS
24. CARGO ENTRY LADDER
25. LADDER
26. APU INLET DUCT
27. APU
28. APU EXHAUST DUCT
29. RADIO ALTIMETER T/R
30. COMM RACK 1
31. LIFERAFT STORAGE CONTAINER
32. LIFERAFTS
33. DATA RACK 6A-6D
34. DATA RACK 9A & 9B
35. COAT CLOSET
36. FWD LOWER COMP. ACCESS HATCH
37. INTERTIAL NAVIGATION UNITS
38. TOOL STORAGE RACK
39. RADAR CIRCUIT BREAKER PANEL
40. CIRCUIT BREAKER PANEL
41. TRANSFORMER-RECTIFIER UNITS
42. RADAR LRU'S
43. LOWER COMPARTMENT ACCESS STAIRS
44. RADAR LIQUID COOLING HEAT EXCHANGER
45. RADAR TRANSMITTER RACK
46. JUNCTION BOXES
47. EMERGENCY EQUIPMENT RACK
48. GALLEY
49. FOOD LOCKER

AIRCRAFT HAZARDS

NOTE:
This Tyndall AFB Drone System aircraft has no composites in the aircraft materials.

STANDARD FUEL TANKS		
	US GALS	LITRES
TOTAL CAPACITY	846	3202
SINGLE TANK DIVIDE BY 2 FUEL TYPE: JP-8		
HYDRAULIC FLUID		
	US QTS	LITRES
NO.1 SYSTEM RESERVOIR	2.68	2.50
NO. 2 SYSTEM RESERVOIR	5.19	4.90
NOSE RESERVOIR	1.25	1.20
ALL SYSTEMS USE PHOSPHATE ESTER-BASED FLUID eg.SKYDROL		

TOTAL OIL CAPACITY FOR BOTH ENGINES	
US GALS	LITRES
11.09	42

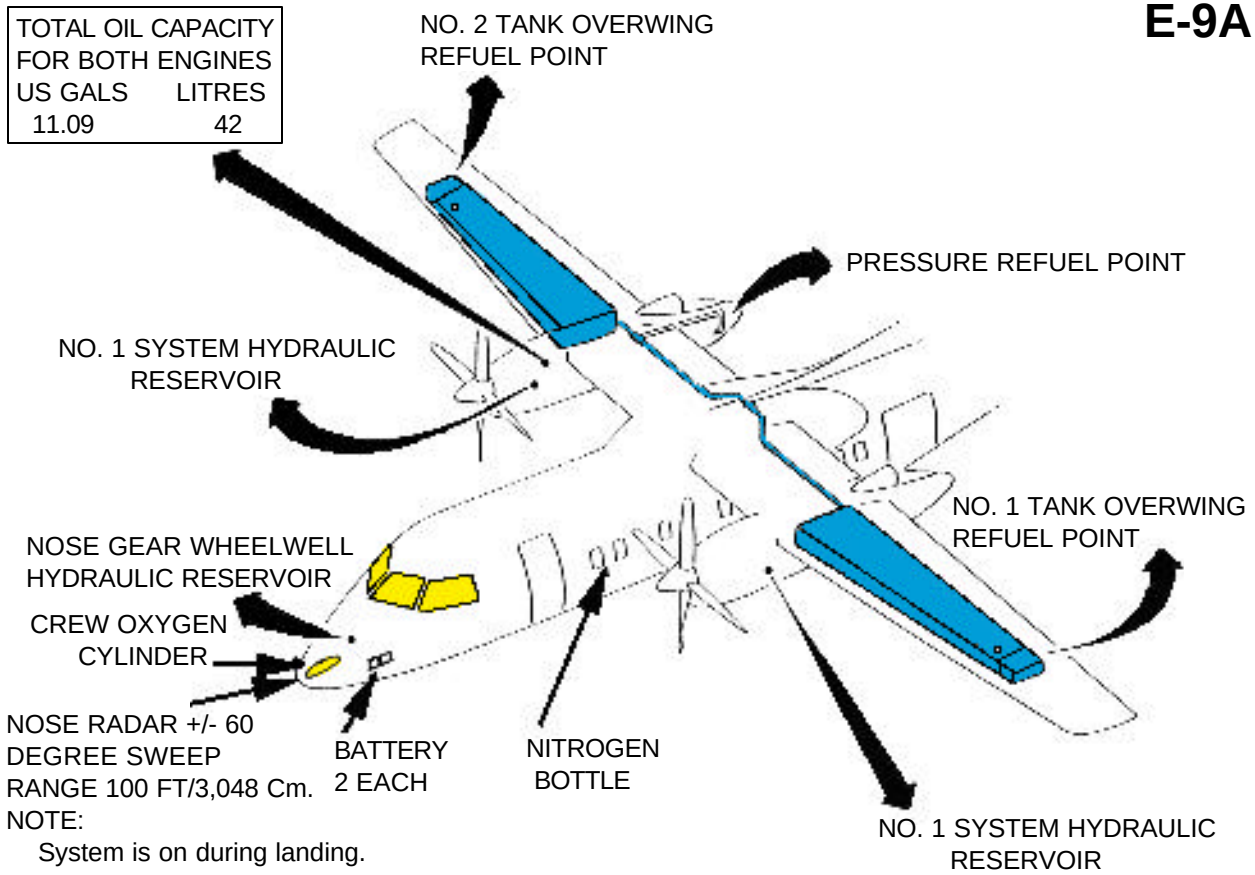

NOTE:
System is on during landing.

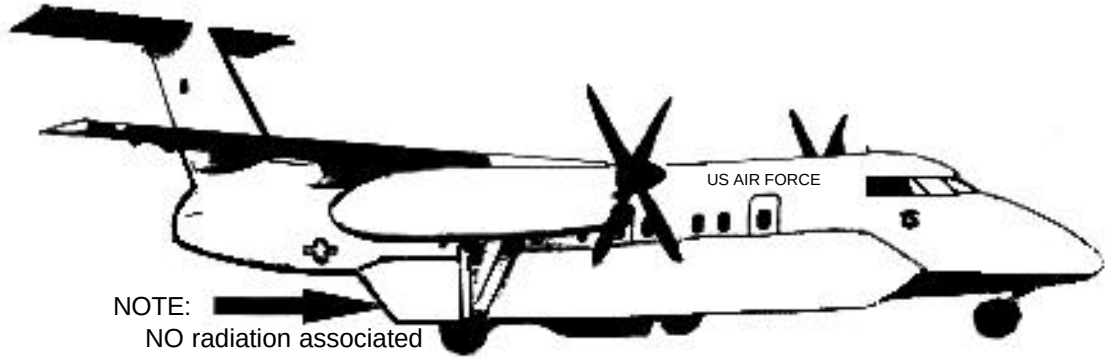

NOTE:
NO radiation associated with right fuselage pod.

AIRCRAFT HAZARDS-Continue

NOTE:

Oxygen system is gaseous type.

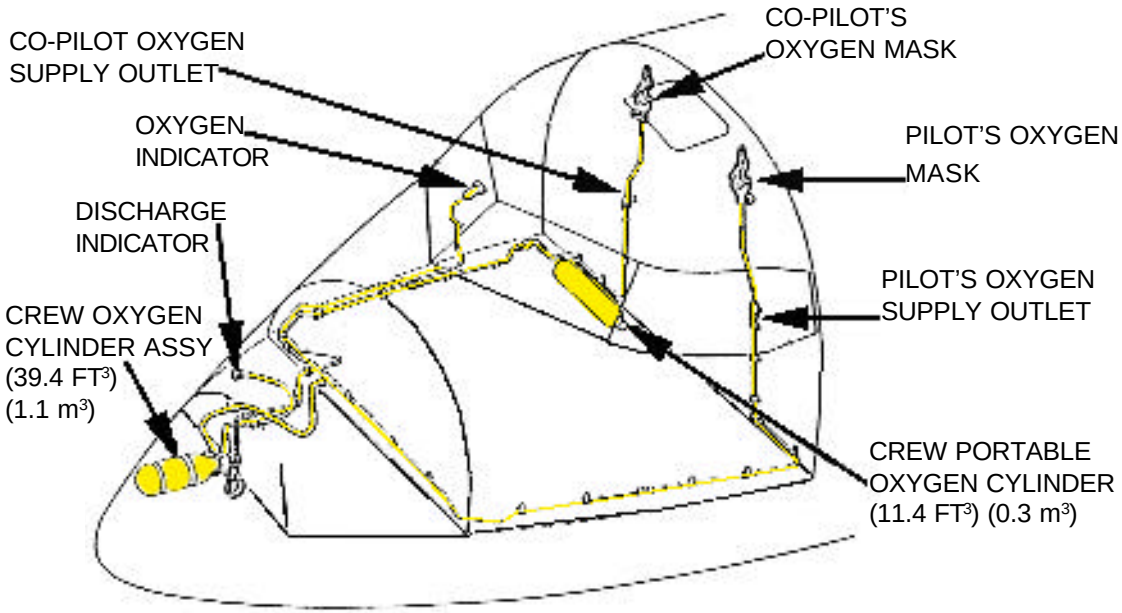

WARNING

- Hot exhaust gases are vented aft of engines.
- Shaded areas represent rotating propeller areas, hot exhaust engine gases and APU hot exhaust gas.

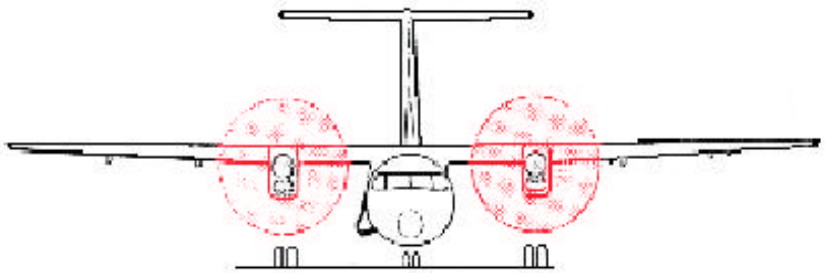

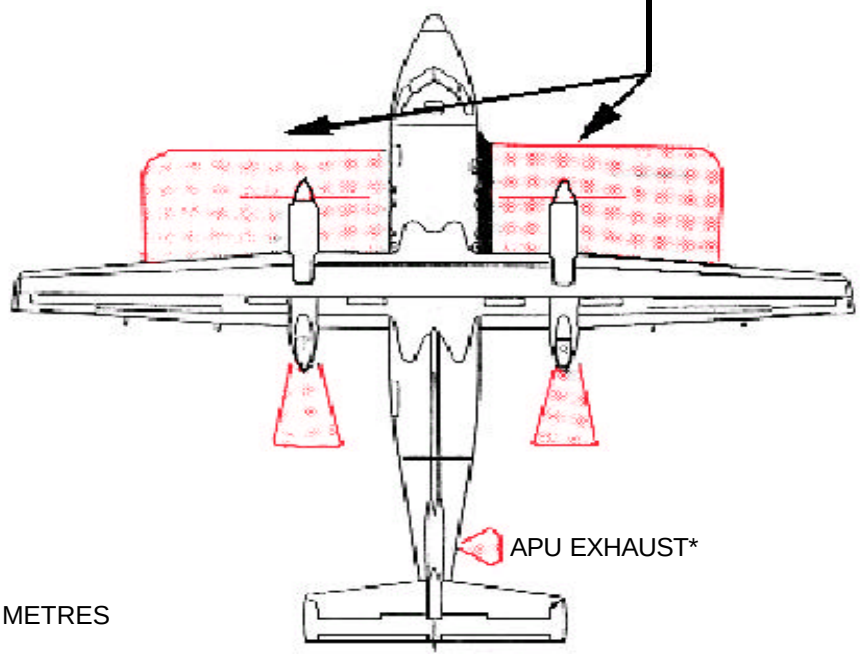

FEET	METRES
0	0
10	3.05
20	6.10
30	9.14
40	12.19
50	15.2
60	18.3
70	21.3

METRES	0	3.05	6.10	9.14	12.19	15.2	18.3	21.3	24.4
FEET	0	10	20	30	40	50	60	70	80

*NOT ALL AIRCRAFT

AIRCRAFT DIMENSIONS

NOTE:

DIMENSIONS TO GROUND LINE INDICATED:

- ARE APPROXIMATELY ONLY AND VARY DEPENDING ON LOADING CONDITIONS AND AIRCRAFT CONFIGURATION.
- BASIC WEIGHT WILL VARY DUE TO CONFIGURATION AND MODIFICATION NO FUEL, NO PAX OR CREW.

WHEELS EXTENDED	WHEELS RETRACTED
A= 125.00 IN. (3.18m)	APPROX 2 FT (.61m)
B= 43.00 IN. (1.09m)	LOWER IN WHEELS
C= 63.00 IN. (1.6m)	RETRACTED SITUATION

*BASIC WEIGHT - 21,047
GROSS WEIGHT - 33.2 0 lb (15,059 kg)
SEATING CAPACITY - UP TO 36 PAX AND 3 CREW

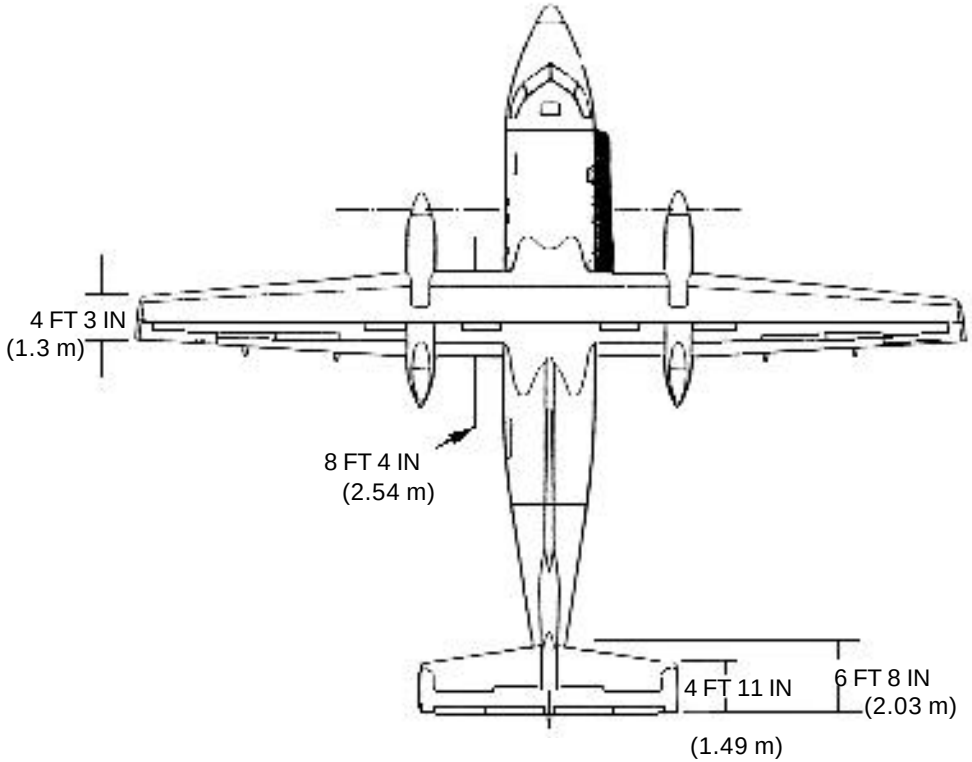

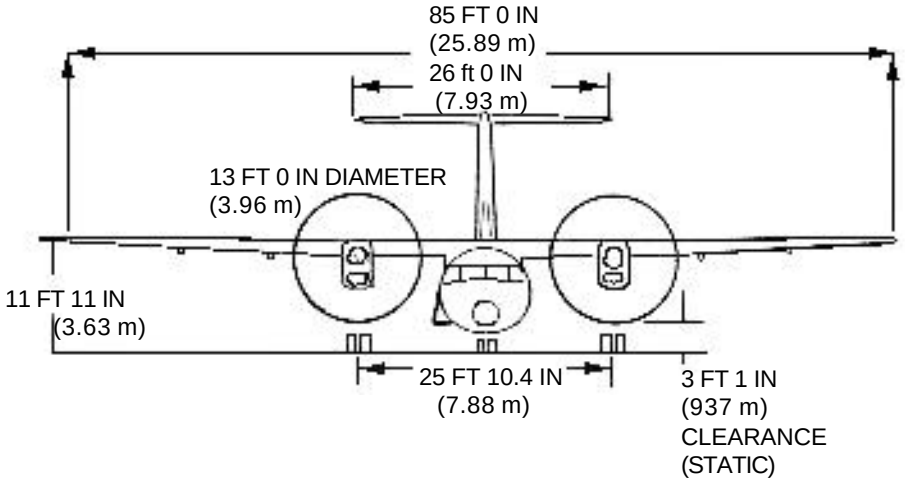

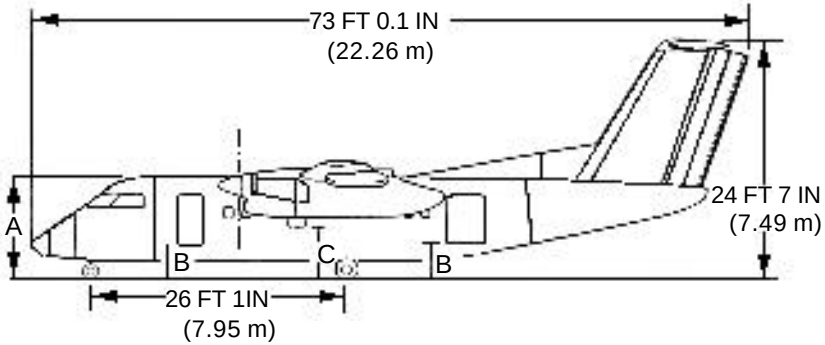

AIRCRAFT SKIN PENETRATION POINTS AND CUT-IN AREAS

1. AIRCRAFT SKIN PENETRATION POINTS AND CUT-IN AREAS

a. Areas require the Fire Drill II for penetration and a power rescue saw for cut-in. It is recommended that a major effort to gain access be directed to hatches and doors due to the type of structure and possible injury to personnel within.

b. There is no externally accessible engine fire access panels.

c. The third window (see color filled window) aft of airstair door is recommended for first choice cut-in (any window is suitable).

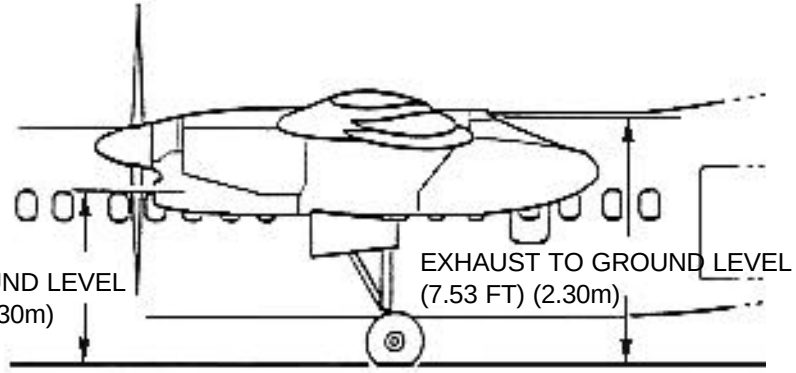

NOTE:
Approximately 2 feet lower in wheels-up situation.

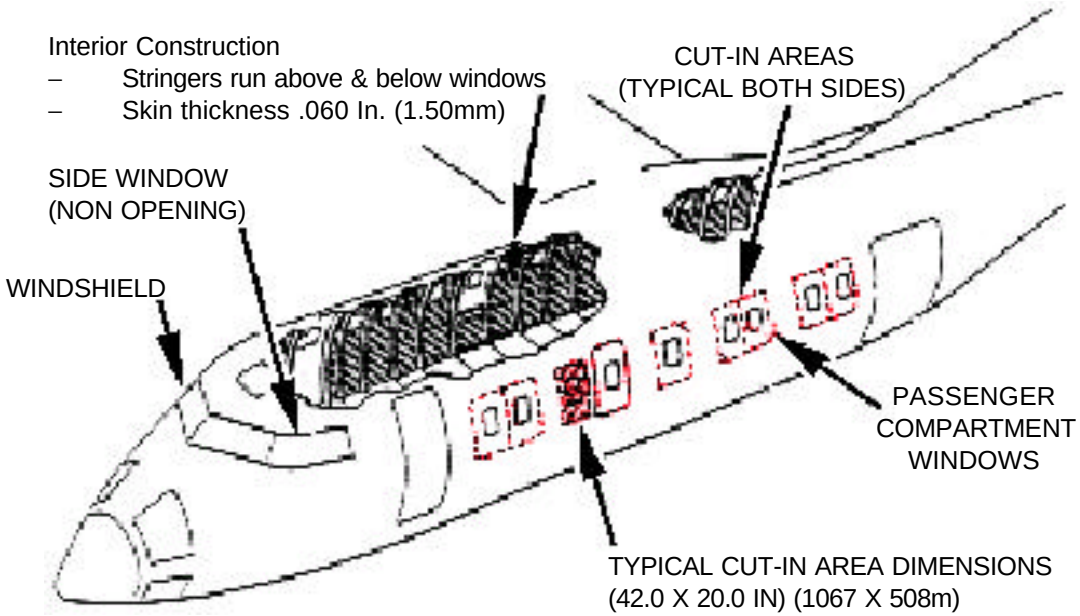

ESCAPE ROUTES AND OVERHEAD EMERGENCY ESCAPE HATCH

HATCH OPERATION

NOTE:
Opening hatch permits depressurization and modest amount of ventilation.

a. To open, rotate handle 72 degrees counterclockwise.
b. Pull downward on handle using 40 pounds of force to release mechanisms allowing hatch to be completely removed.

NOTE:
In an emergency it may be possible by cutting through the outer skin to gain access to reposition the operating handle from outside and then force the hatch downwards.

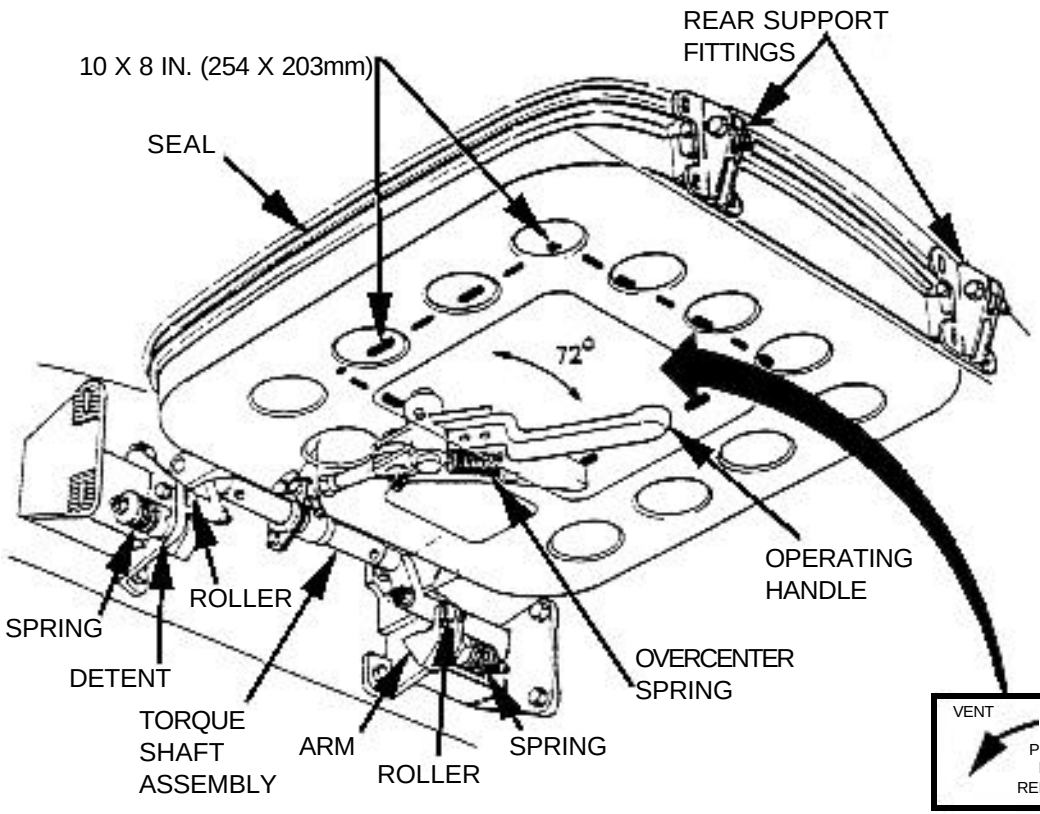

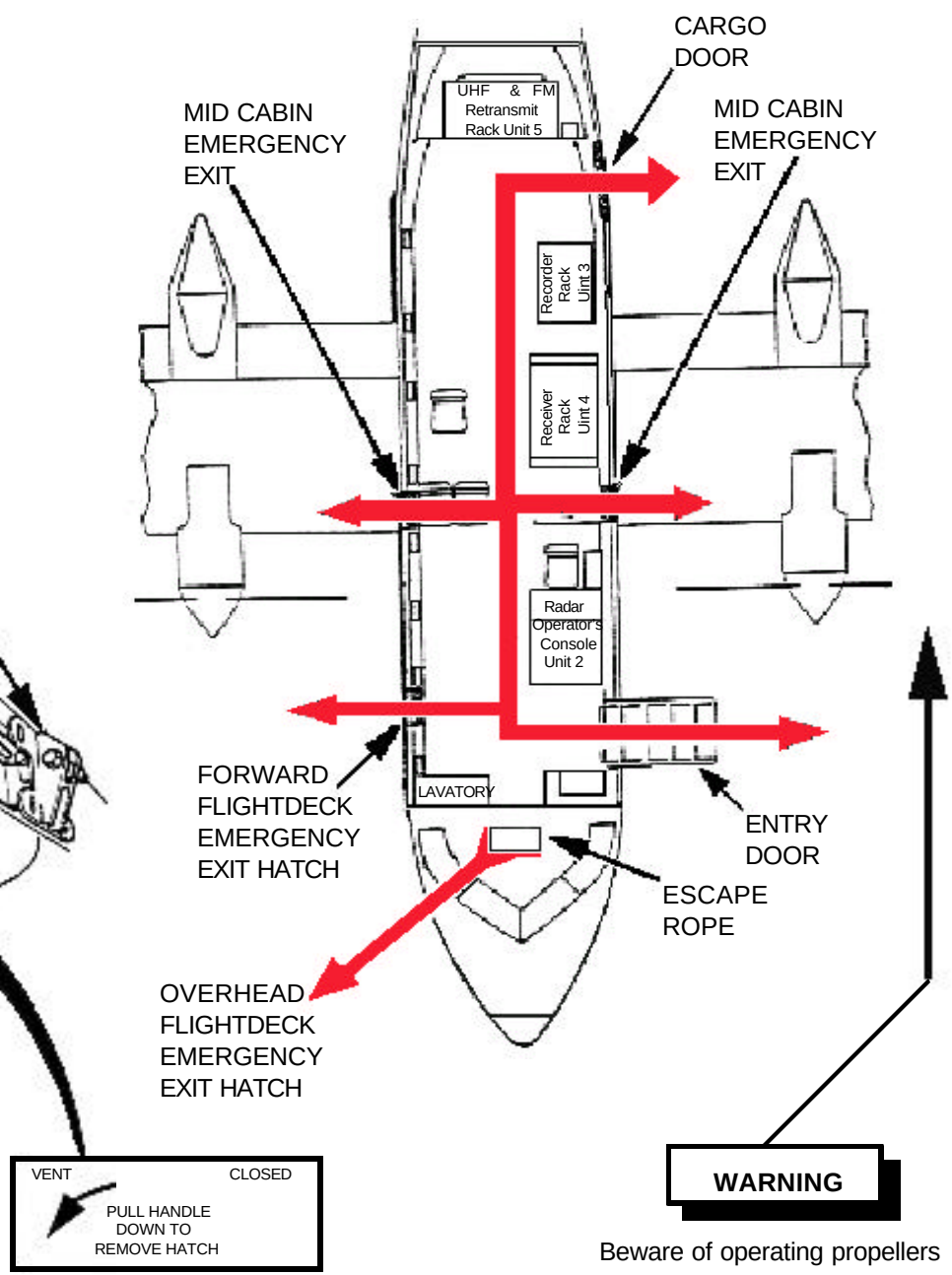

WARNING

Beware of operating propellers when using the Entry Door and Forward Cabin Emergency Exit.

FLIGHTDECK AND CABIN ARRANGEMENT

CREW - 4
PASSENGERS - 4

FLIGHTDECK

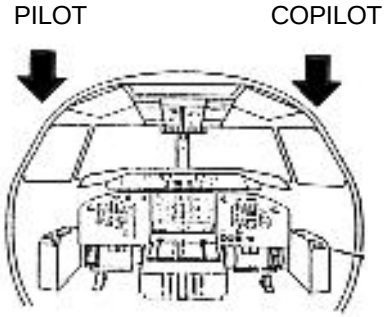

FORWARD VIEW

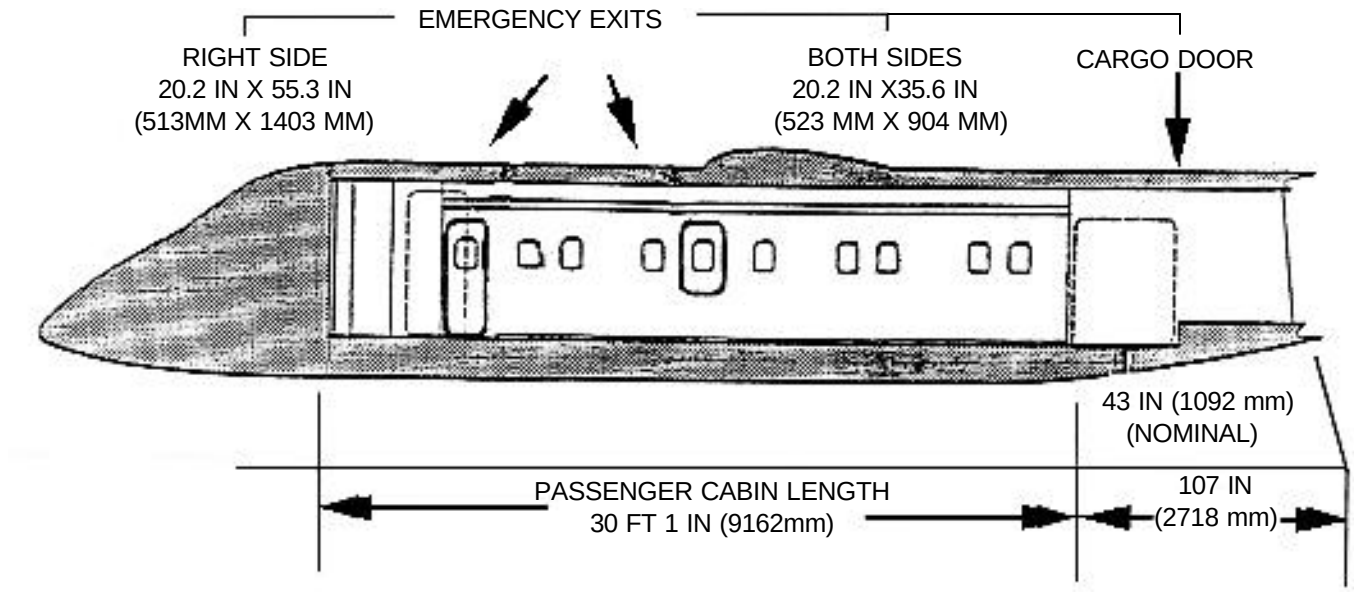

AFT VIEW OF FLIGHTDECK

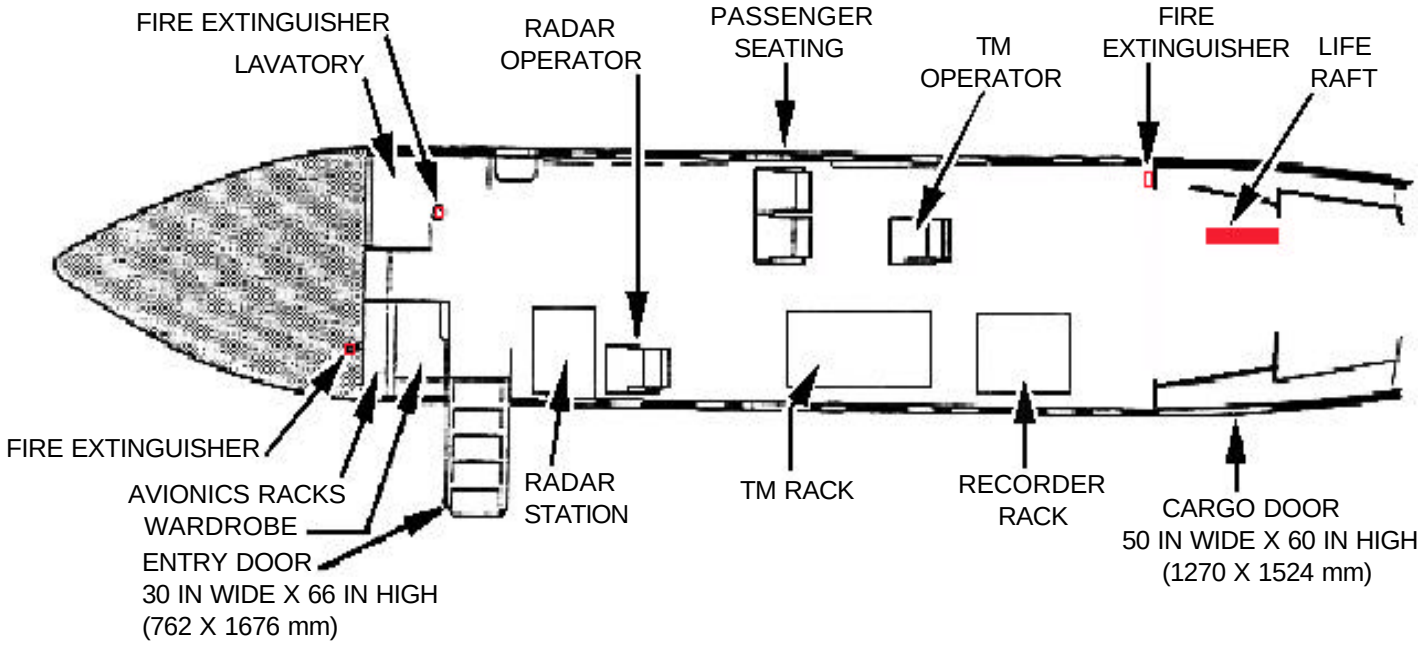

SPECIAL TOOLS/EQUIPMENT
Power Rescue Saw
Fire Drill II

1. NORMAL ENTRY
a. Approach aircraft on left side staying close to the fuselage and away from propeller and heated engine cowling.
b. Locate entry door and open by pulling the door access handle down and support door while lowering.
c. If step 2 fails, go to rear cargo door and push release button and rotate butterfly control handle clockwise until door unlocks, then raise door up until door locks in place. Door only opens from the outside.

2. EMERGENCY ENTRY
a. Use entry door.
b. Use cargo door as a secondary option.
(1) Push center (red) button, RT and LT handles will pop out (2) Turn counterclockwise (3) Lift door to open - handle to be flush in open position.
c. For mid cabin emergency exit doors, push handle release button to extend handle.
d. Rotate operating handle counterclockwise down and push exit door in.

3. EMERGENCY EXITS
a. Once inside aircraft, to use the mid cabin emergency exit door, pull internal operating handle down and then pull exit door in.
b. When using the emergency escape hatch use the jump seat for step up. Release latch is at lower right of seat.
c. Cargo door - to open, pull knob while turning handle clockwise until knob retracts. Ensure knob is fully retracted before raising door. (See page E-9A.8.)

NOTE:
Right side cabin emergency exit doors may be partially blocked by antenna array fairing.

3. CUT-IN
a. Using a power rescue saw, cut around the passenger compartment windows. First window of choice is third windows. First window of choice is third window aft of entry door; however, any window is suitable.

NOTE:
AF version with right side fuselage fairing for large, electronically steerable phased array antenna, a ventral radome, and extensive internal avionics and electronics.

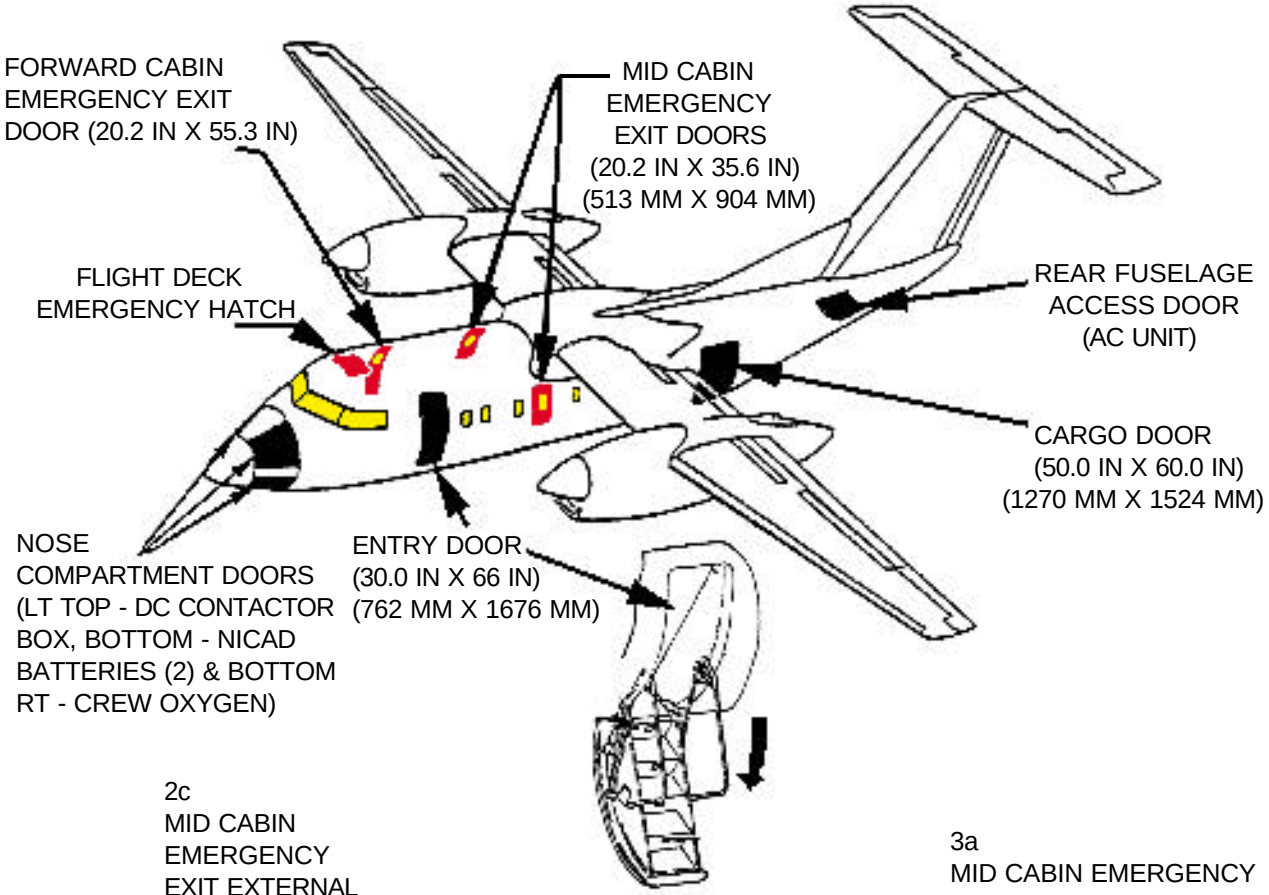

2c
MID CABIN EMERGENCY EXIT EXTERNAL OPERATION

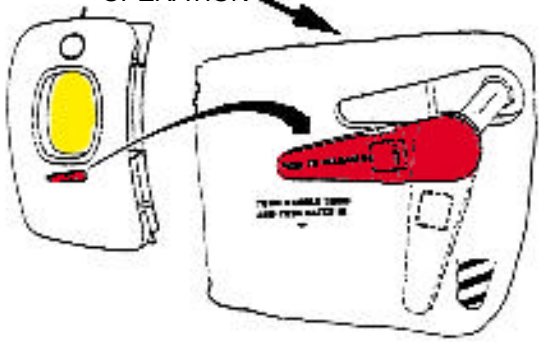

3a
MID CABIN EMERGENCY EXIT INTERNAL OPERATION

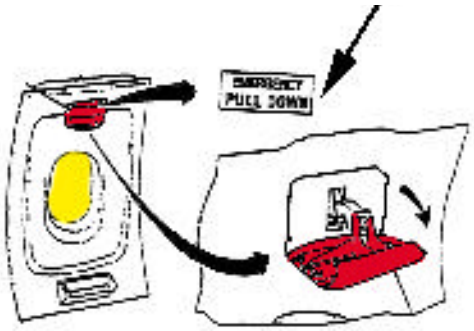

CREW AND PASSENGER ESCAPE SYSTEMS

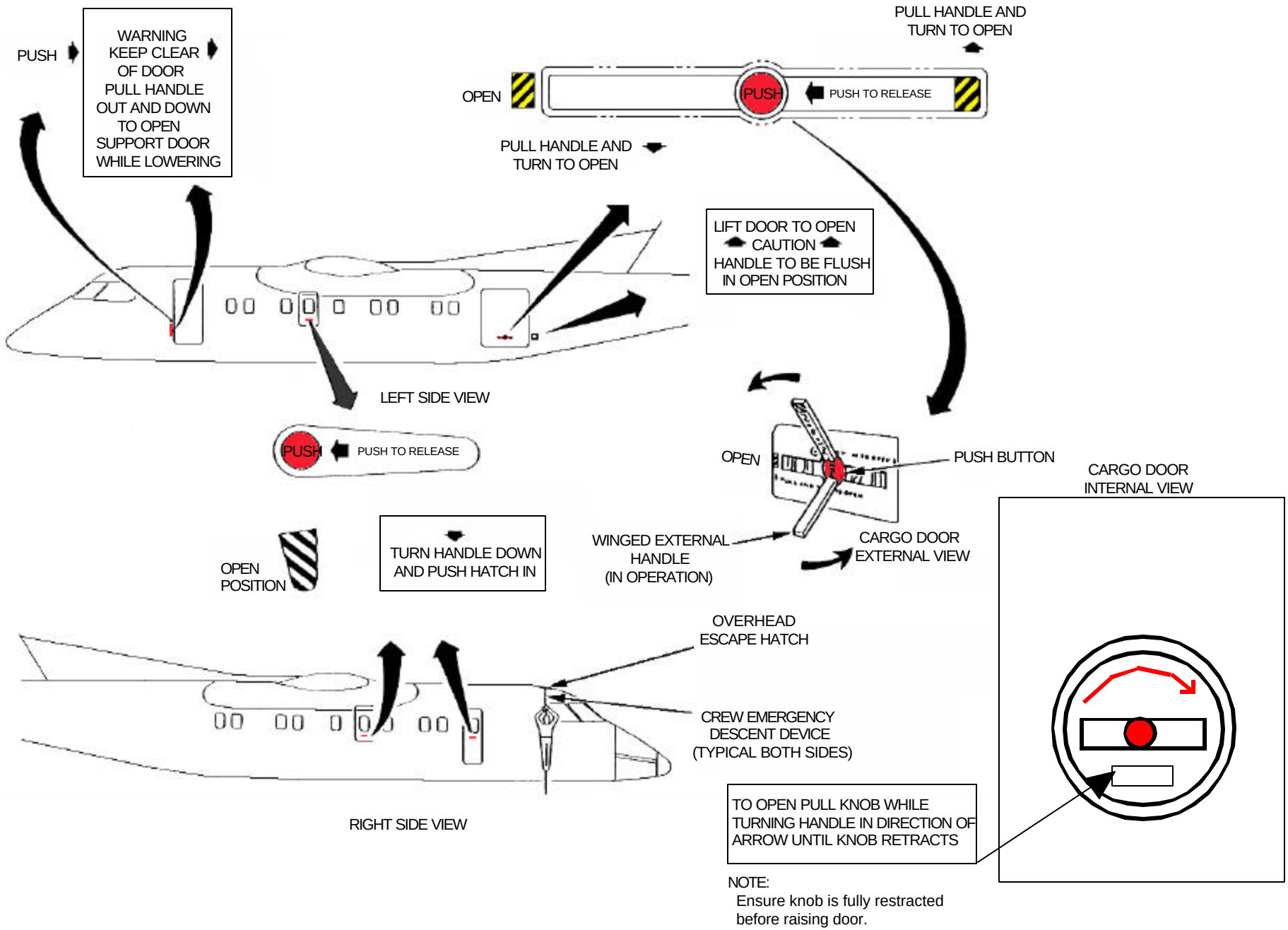

ENGINE SHUTDOWN AND AIRCREW EXTRACTION

4. ENGINE SHUTDOWN

NOTE:

Electrical power must be present.

a. Pull both engine condition levers AFT, located on center console, to FEATHER position, then raise finger lifts on levers, to the IDLE position.
b. Pull both fuel shutoff “T” handles, located on the overhead console, to shutoff fuel flow and hydraulic power.
c. Place battery master switch, located on the overhead console above pilot’s head, to the OFF position.
d. Place main (external) power switch, located next to master battery switch, to OFF position.
e. To disconnect 2 28VDC batteries, open access panel in left lower nose, break safewire, turn terminal knobs counterclockwise.

5. IN CASE OF ENGINE FIRE

a. Electrical power must be present for fire bottles to operate.
b. Pull fuel “T” handle.
c. Push extinguisher toggle switch either aft to discharge bottle #1 or forward to discharge #2.

NOTE:

Fire bottles and agent discharge indicators are located under left wing root. Agent discharge indicator will show YELLOW if agent has been used and RED if there is a thermal agent escape.

6. CREW EXTRACTION

a. Release inertia reel controls, inboard at elbow, to unlock shoulder harnesses of forward seats.
b. Rotate harness release dial, in either direction, to release lap belt and shoulder harness for the forward and two workstation seats.
c. Pull lever up at right corner of both forward seats to tilt back for easier extraction.
d. Disconnect the lap belts of the two passenger seats without workstations.

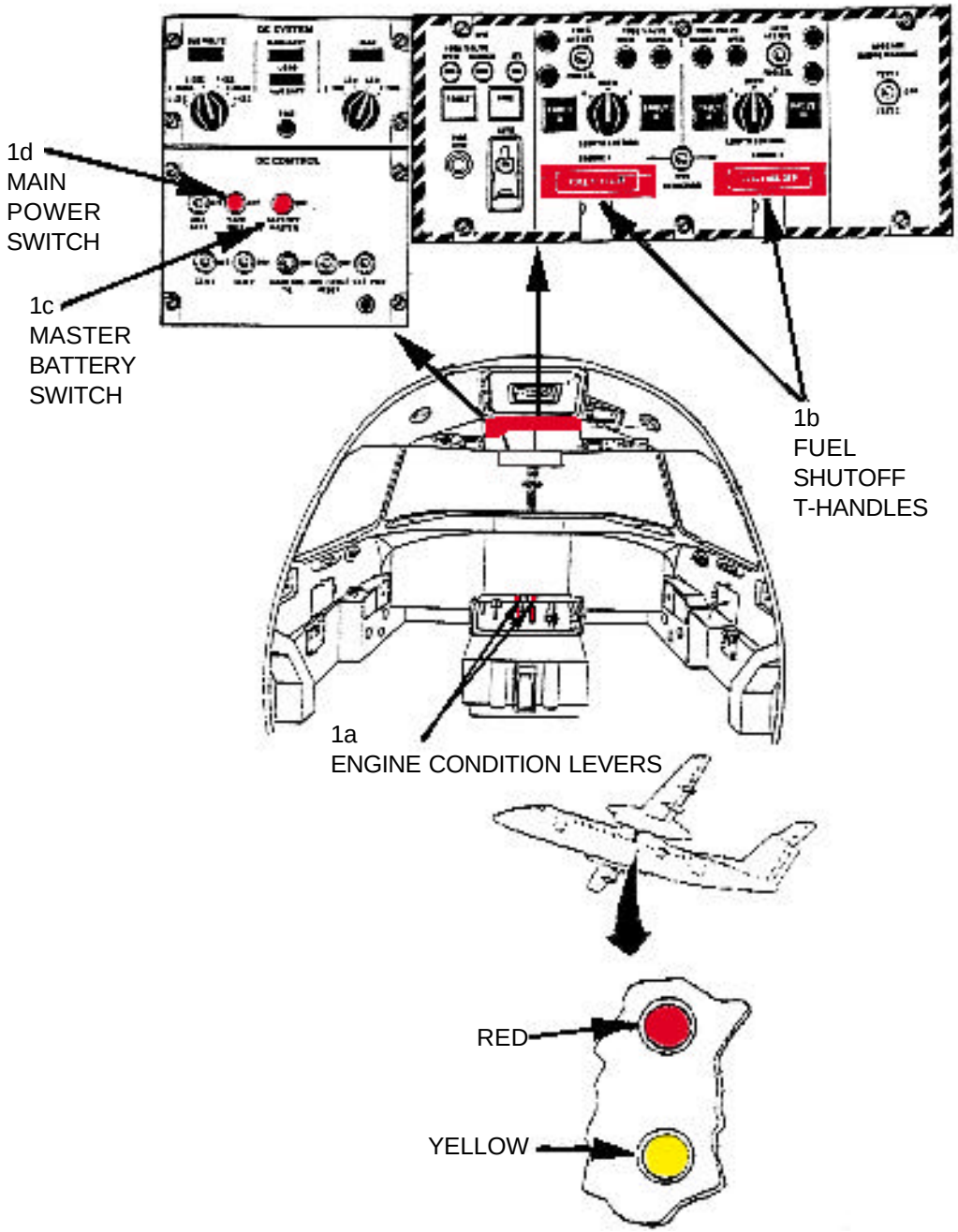

AIRCRAFT HAZARDS

RADAR, HF, AND IR RADIATION

WARNING

1. RADAR
- 50 foot area hazardous to personnel
- Within 100 feet, possible fuel ignition and electro explosive device detonation

2. HF ANTENNAS

- Ground operation of the HF radios is prohibited unless the aircraft is at least 200 feet from the following:
  - (a) unloaded weapons or warheads
  - (b) loaded weapons in an aircraft with bomb bay doors open.
  - (c) Missiles with warhead compartment doors open, or thruster and squib access door open.
- Do not transmit on the HF radio when in contact with or in close proximity to the KC-10 air re- fueling boom, as this may cause uncommanded movement of the boom, endangering the tanker or receiver aircraft and crews.

3. IRCM
- Ensure no unnecessary personnel are within 19 feet of the radiating side of an operating IRCM unit, (covert filter assembly installed). Personnel required to be within 19 feet should not look at the IRCM unit windows without appropriate IR safety glasses.

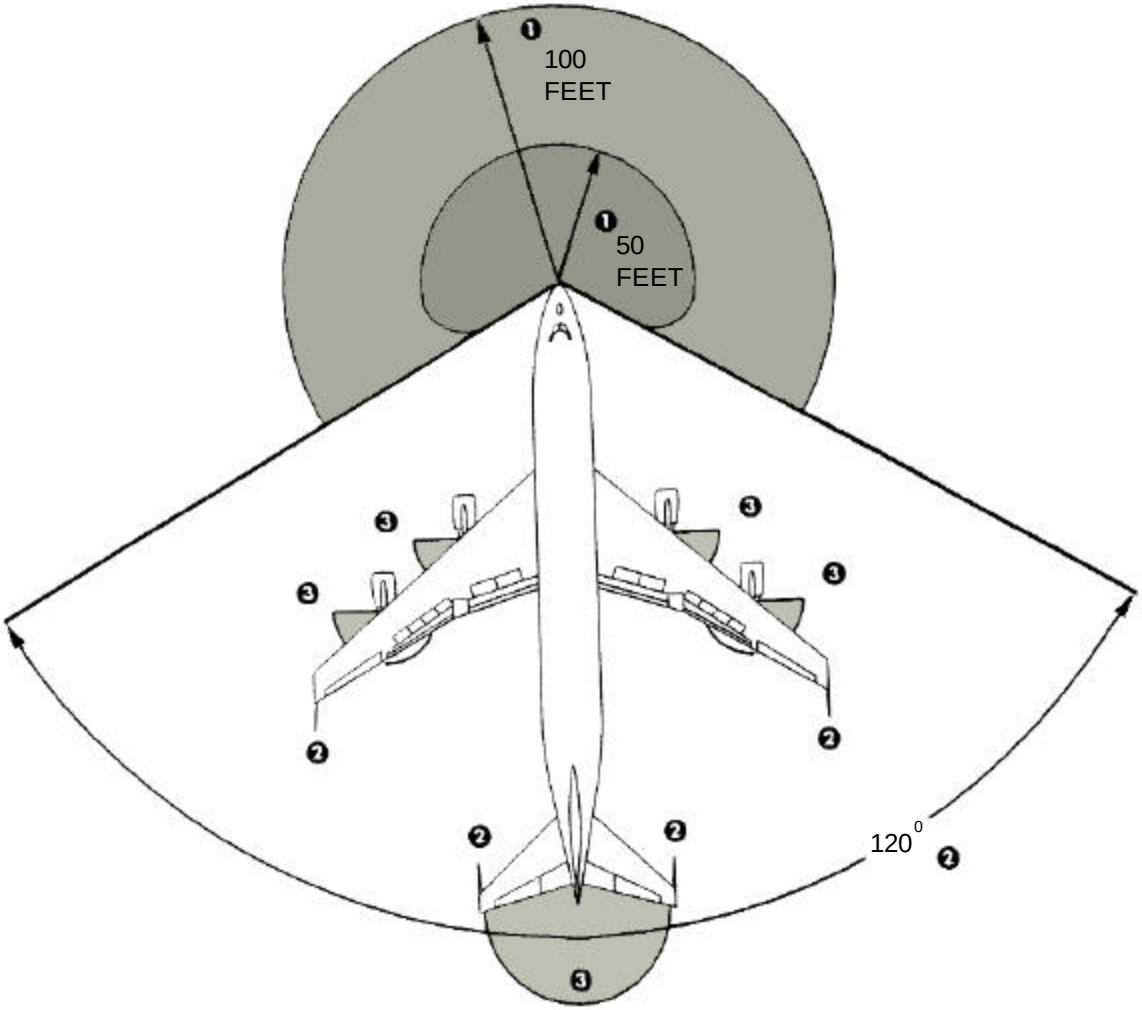

AIRCRAFT HAZARDS-Continued

ENGINES, APU AND NOISE

NOTE:
Includes 20 knot crosswind effect.

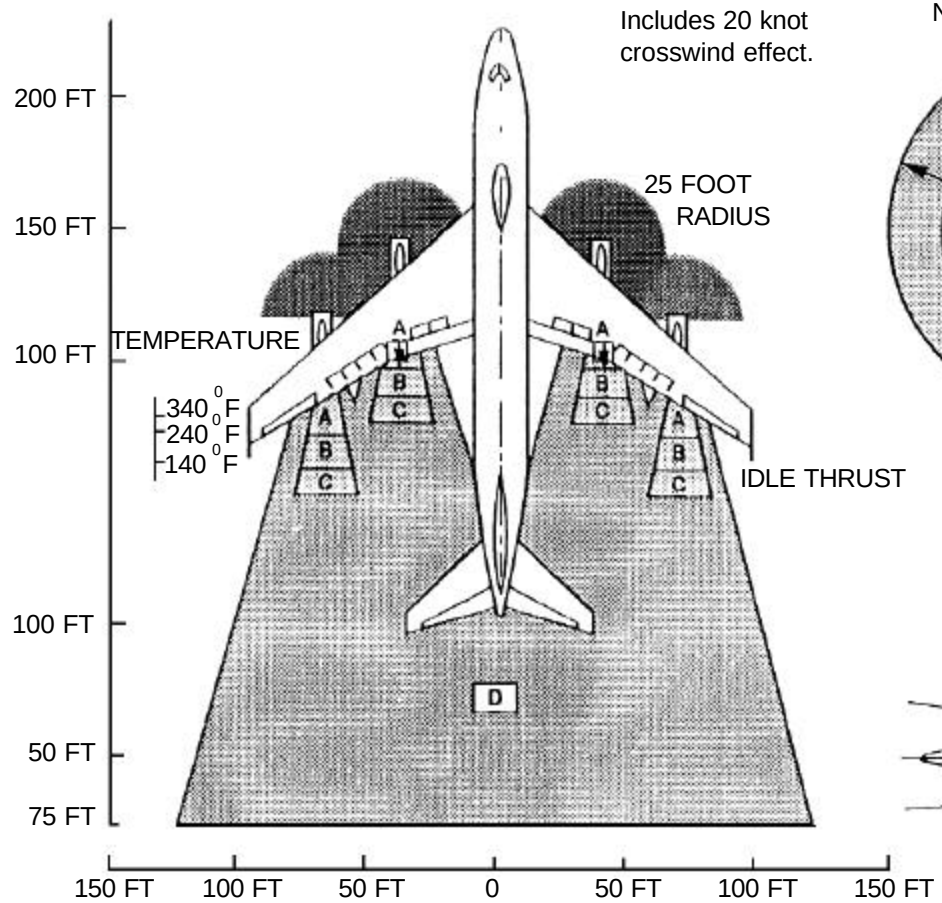

INLET SUCTION DANGER
A WIND VELOCITY APPROXIMATELY 210 TO 145 MPH
B WIND VELOCITY APPROXIMATELY 145 TO 105 MPH
C WIND VELOCITY APPROXIMATELY 105 TO 65 MPH
D WIND VELOCITY APPROXIMATELY 65 TO 20 MPH

NOISE HAZARD AREAS

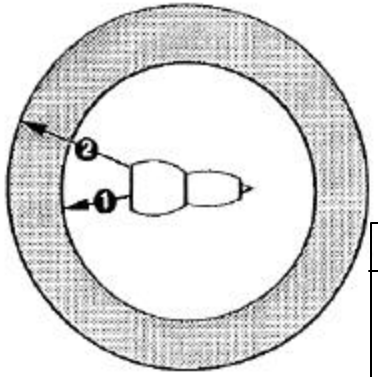

WARNING

❶ Prolonged exposure of one hour, even with ear protection, can cause ear damage.

❷ Ear protection required within this area.

POWER SETTING	RADIUS ❶	RADIUS ❷
GROUND IDLE	75 FT	100 FT
BREAKAWAY THRUST 52% N1	100 FT	150 FT
TAKEOFF THRUST	100 FT	200 FT

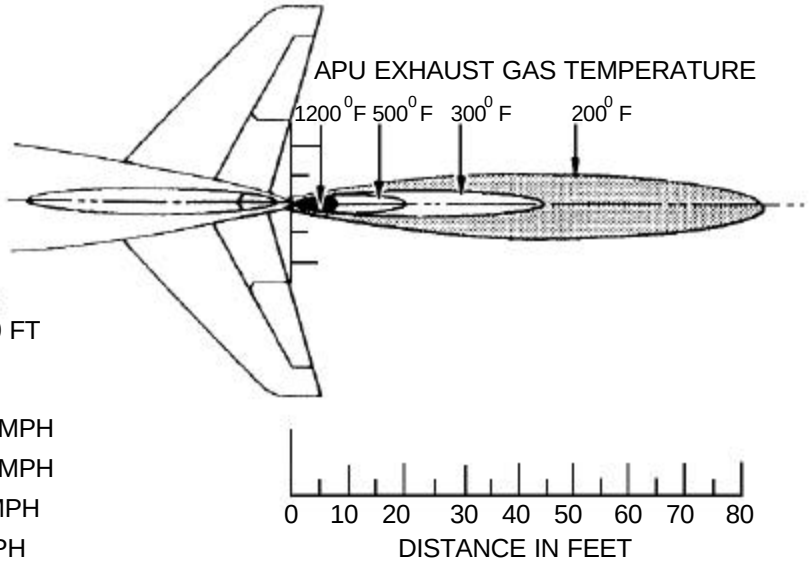

AIRCRAFT HAZARDS-Continued

NOISE: APUs AND 3 Air Conditioning Packs

◯ Measured 5 feet above ground

◇ Measured 5 feet above floor

1 foot outside door centerline

▲ Measured 1 foot below aircraft skin

CONDITIONS:

Sound levels in dB
Standard day
3 A/C pack in max cooling
2 APUs operating

NOTE:

These conditions represent the highest noise environment associated with normal servicing.

WARNING

Ear protection is required for noise levels above 85 decibels.

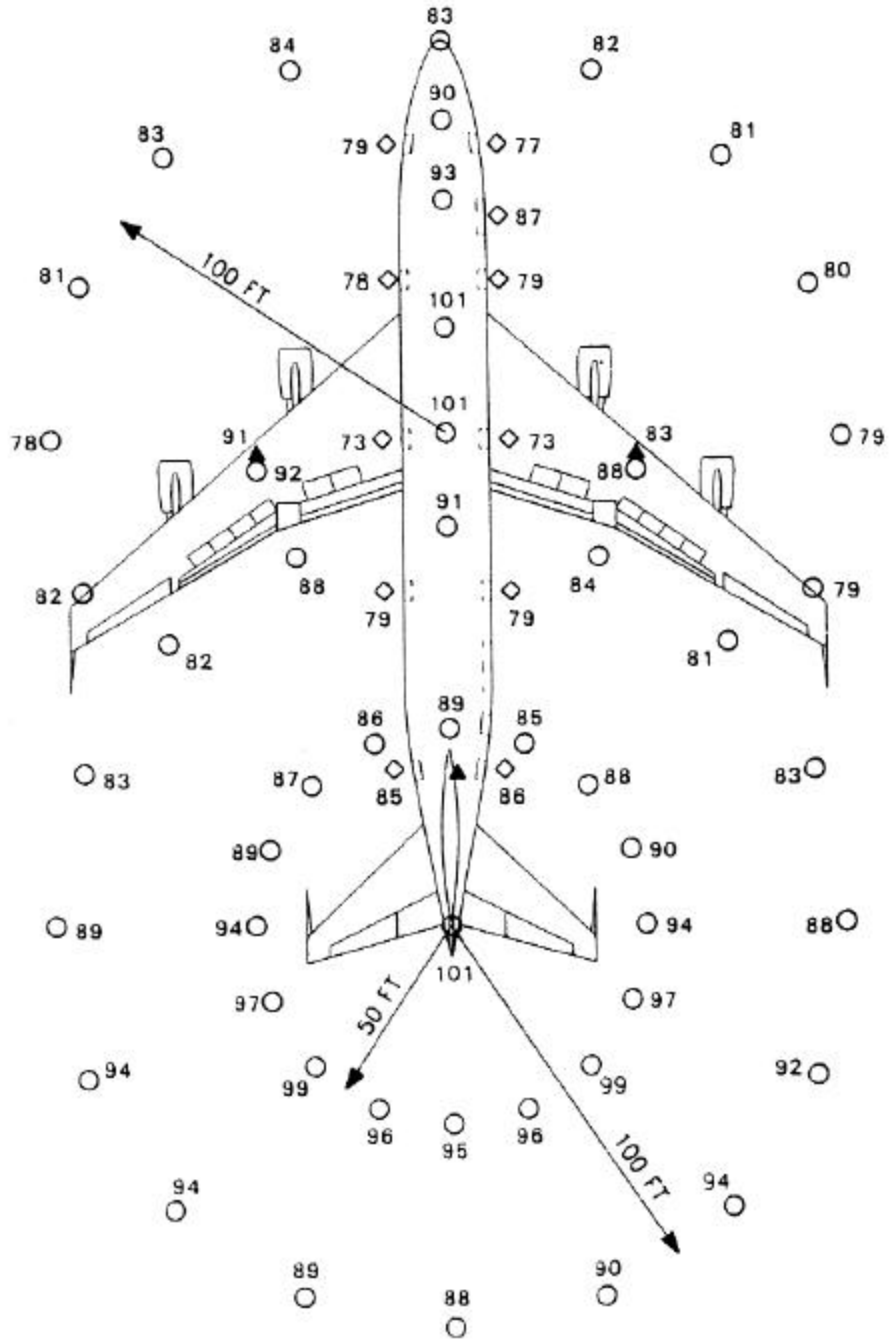

AIRCRAFT HAZARDS-Continued

OXYGEN SYSTEMS

NOTE:

The aircraft oxygen system is divided into three separate and independent systems: the flightcrew, passenger, and medical dispensary oxygen systems. The dedicated storage cylinders for these systems are located right side of forward cargo compartment aft of the forward cargo door. (See illustration.) In addition, portable oxygen bottles are located throughout the aircraft to provide protective and emergency oxygen.

OXYGEN SHUTOFF VALVES

All shutoff valves are closed by turning the cylinder shutoff valve knob clockwise. The flightcrew system has two (2) cylinders, passenger system has five (5) cylinders and the medical dispensary system has three (3) cylinders. Each cylinder, when fully charged to 1850 PSI at 70 degrees F, contains 114 cubic feet of oxygen at standard sea level pressure.

WARNING

- If valves need to be opened, open valves slowly or excessive temperatures may result.
- Residual pressure can be as high as 1850 PSI and oxygen could escape with considerable force.

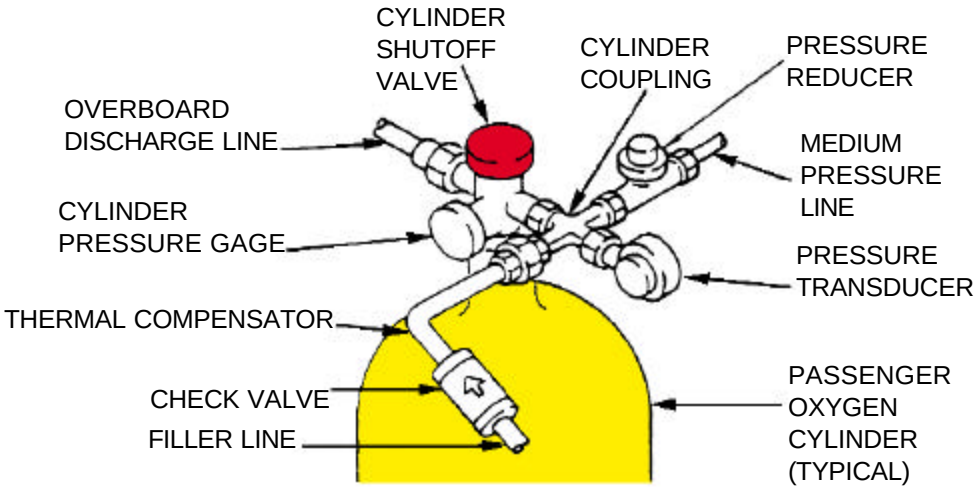

OXYGEN CYLINDER ASSEMBLY

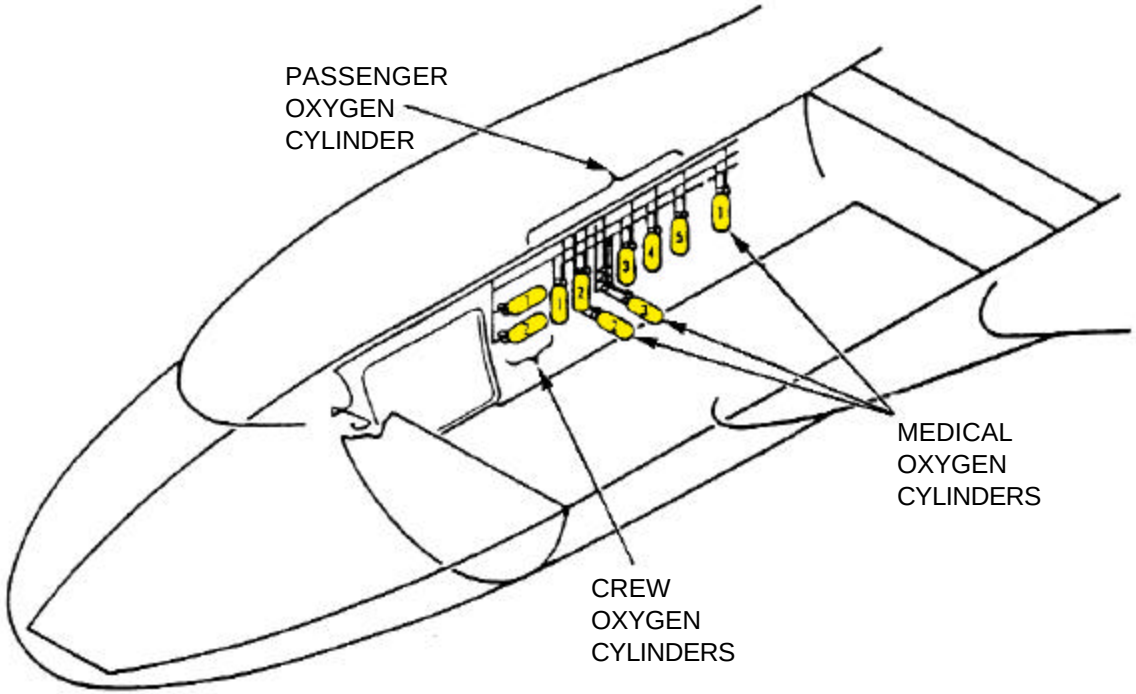

VC-25A

SPECIAL TOOLS/EQUIPMENT
Power Rescue Saw
35 Foot Ladder
SPAAT/Fire Drill II

NOTE:
23 Crewmembers
70 Passengers

NOTE:
Total Fuel
53,611 US Gallons

AIRCRAFT ENTRY
ALL AIR FORCE 1 MODELS

1. NORMAL/EMERGENCY ENTRY

a. Pull entry door handles from recess position and rotate 180 degrees clockwise for entry doors located on far left side and counterclockwise for entry doors on right side.

NOTE:
All main deck entry door open forward. Number (3) left side entry door and number (1) and (3) right side entry doors are blocked.

b. Press release button on crew escape hatch, located top forward center of crew compartment, and rotate escape hatch 180 degrees clockwise. Push escape handle inward.

c. Pull handle, located on crew door, and rotate 180 degrees counterclockwise. Push door inward until slide tracks are engaged, then slide door aft.

WARNING

Opening a door from the outside disengages the emergency evacuation system and the escape chute/slide will not deploy.

NOTE:
All emergency escape chutes/slides are deployed from inside the aircraft only.

2. CUT-IN

a. Cut areas along the window lines as a last resort with the power rescue saw.

b. Use SPAAT/Fire Drill II for skin penetration points as illustrated for the E-4 on pages E-4.1,.2, and .3.

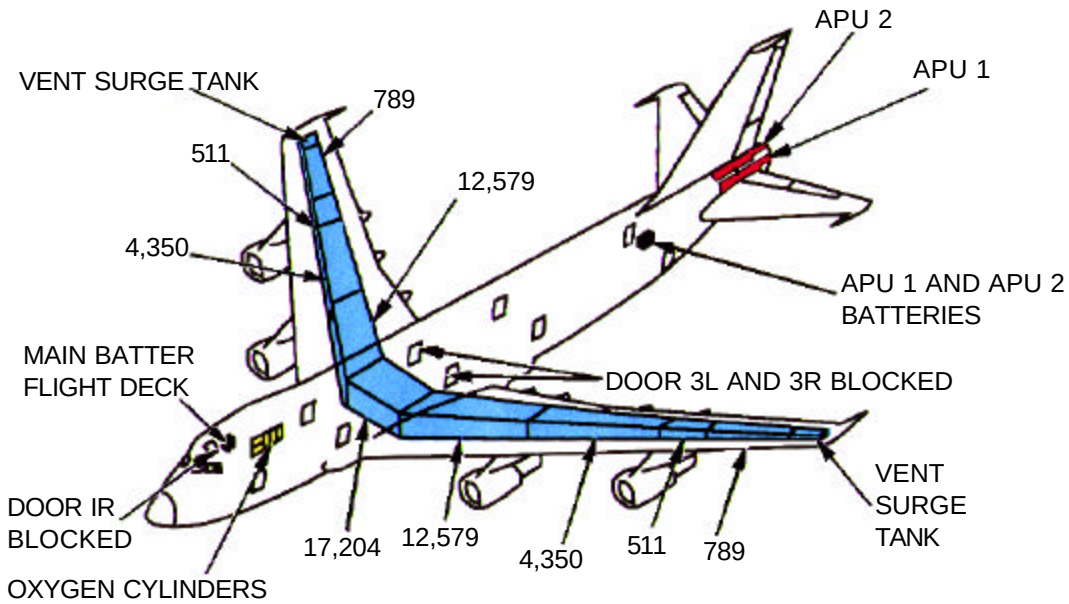

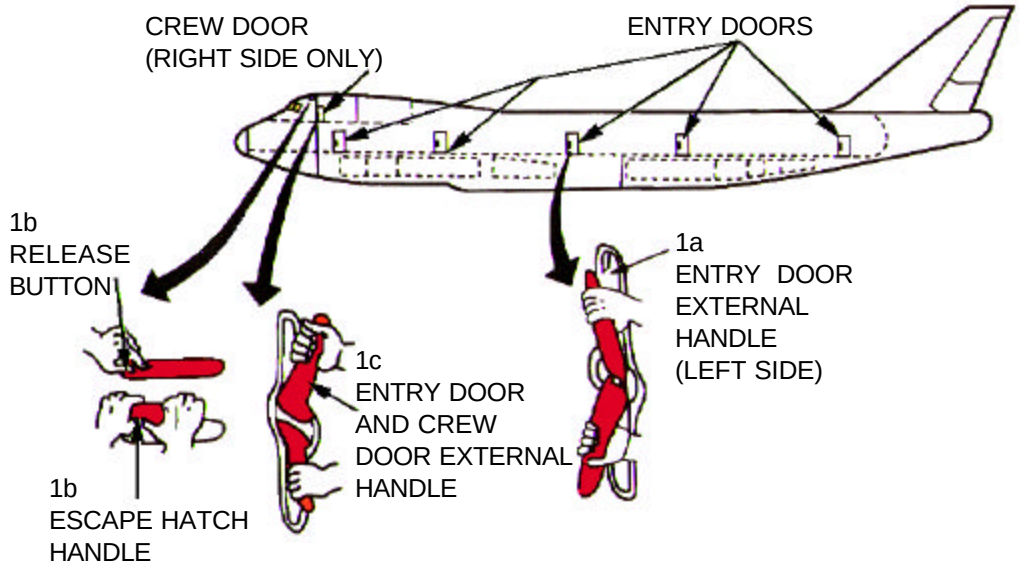

ENGINE SHUTDOWN

1. ENGINE SHUTDOWN

a. Retard thrust levers, located on pilot's center console, to IDLE position.
b. Place engine start levers, located on pilot's center console, to CUTOFF position.
c. If engines fail to shutdown, pull emergency fire T-handles, located on pilot's overhead panel.
d. Place battery switch, located on flight engineer's center panel , to OFF position.
e. Place APU1 and APU2 switches located on flight engineer's upper left panel, to STOP position.
f. If APUs fail to shutdown, pull APU1 and APU2 emergency fire T-handles, located on flight engineer's overhead panel.
g. To shutdown APUs outside of aircraft, press and hold APU1 and APU2 shutdown switches for a minimum of 5 seconds.

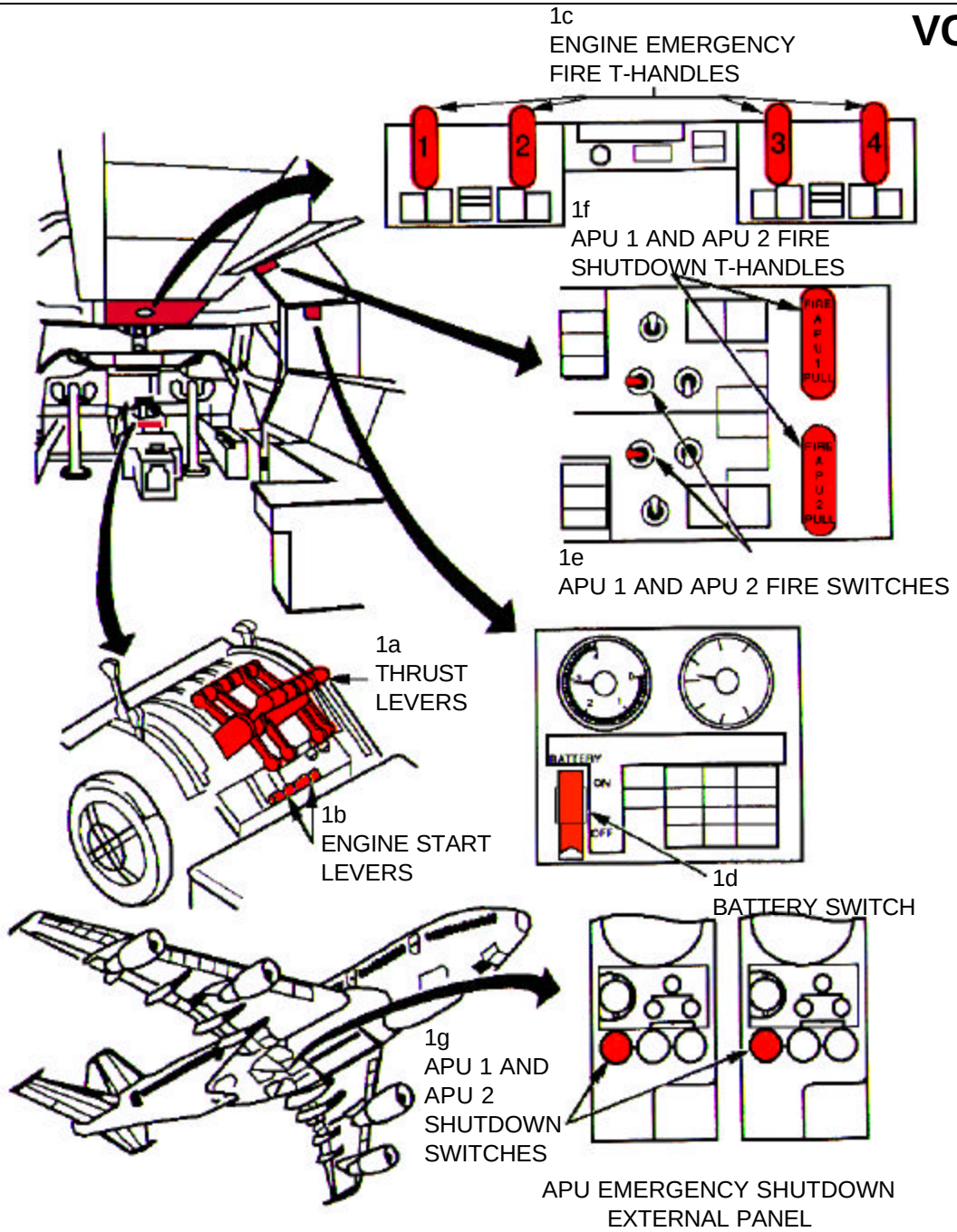

AIRSTAIR OPERATION

1. AIRSTAIRS CONTROLS

a. Fully open the exterior door lock handle.

b. Place and hold the control switch in the OPEN EXTEND position until the airstairs fully extends and contacts the ground. Release control switch when the EXTENDED position light comes on.

NOTE:
The door lock handle may be closed or left open after extending the airstairs.

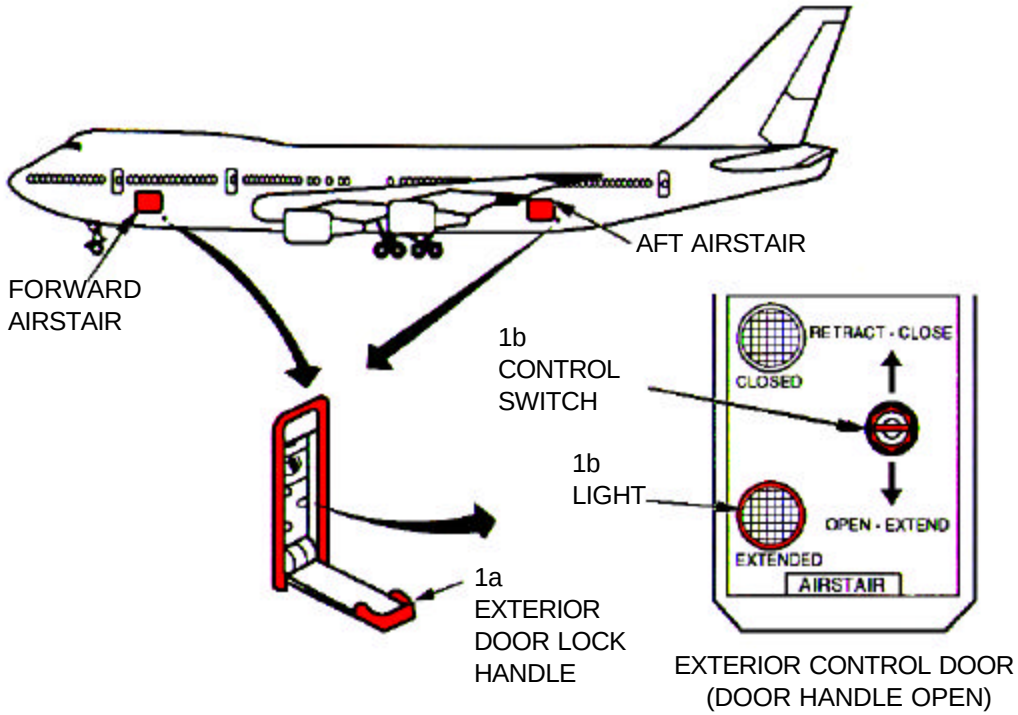

EXTERIOR CONTROL DOOR (DOOR HANDLE OPEN)

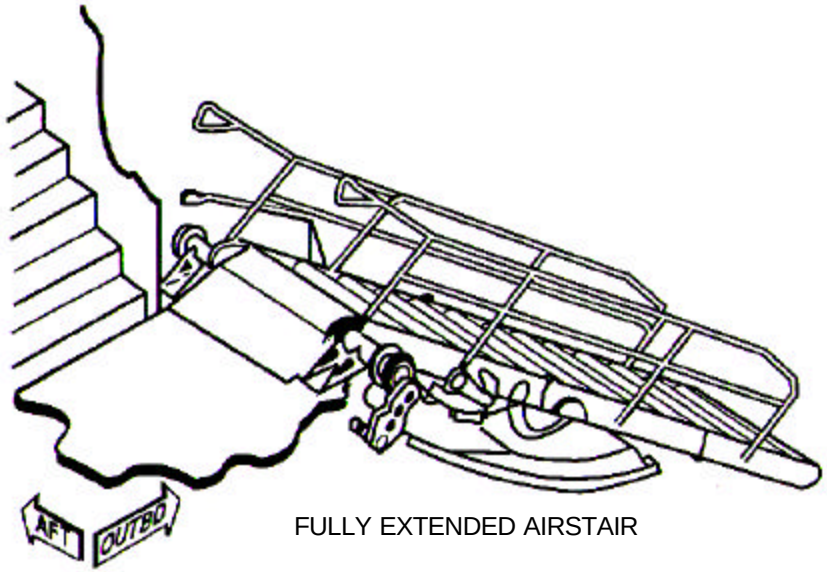

FULLY EXTENDED AIRSTAIR

CABIN CONFIGURATION

VC-25A

AIRCRAFT INTERIOR

1 CONTROL CABIN
2 CREW REST AREA/COMMUNICATIONS CENTER
3 MAIN DECK

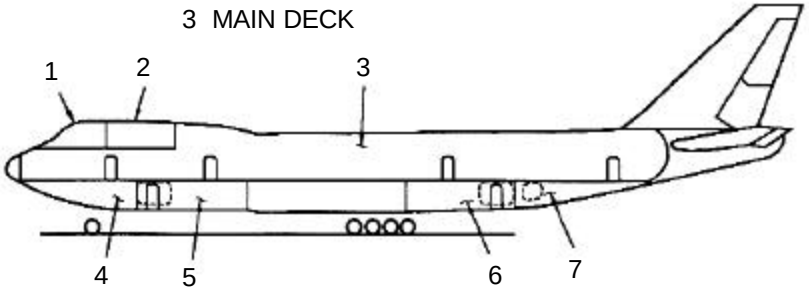

4 COMMUNICATIONS EQUIPEMENT
5 FORWARD LOWER COMPARTMENT
6 AFT LOWER COMPARTMENT
7 BULK CARGO COMPARTMENT

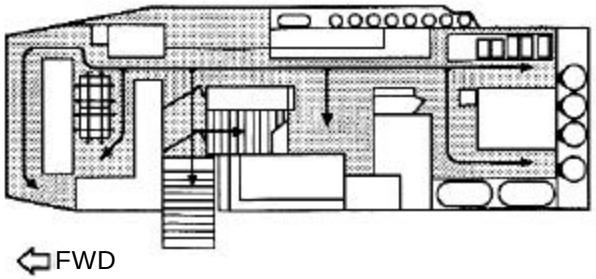

LOWER FORWARD COMPARTMENT

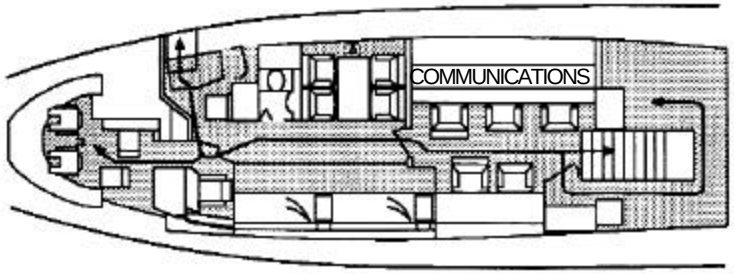

FLIGHTDECK, UPPER DECK REST AREA, AND COMMUNICATIONS CENTER

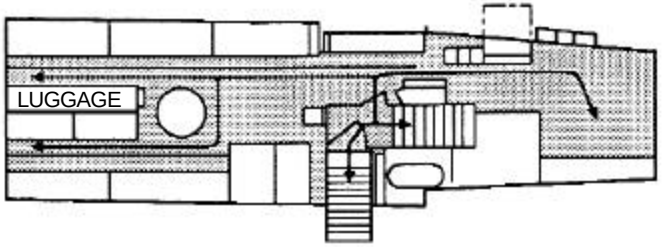

LOWER AFT COMPARTMENT

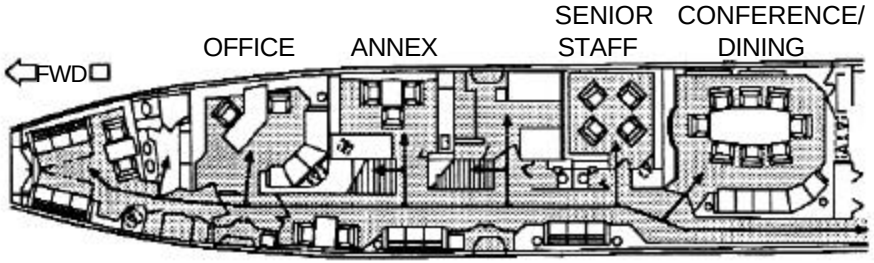

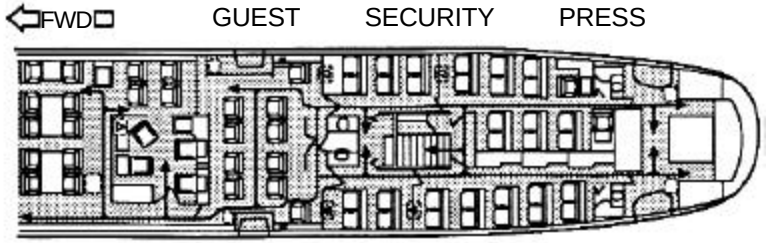

AIRCREW EXTRACTION, SEATING AND POSITIONING

1. AIRCREW EXTRACTION

a. Unlatch lap belts and remove shoulder harness from crewmembers.

b. Depress control handles and rotate flight engineer's seat from left to right.

c. Passenger seats are equipped with lap belts only.

NOTE:
If seat tracks are not damaged during crash landing, use adjustable seat controls to retract seats to aft position.

2. SEATING AND POSITIONING

PILOT'S SEAT

LEGEND

1. HEADREST ADJUSTMENT KNOB
2. HARNESS/SEAT BELT ROTARY BUCKLE
3. ARMREST ADJUSTMENT CONTROL BUTTON
4. VERTICAL ADJUSTMENT CONTROL CRANK (not shown)
5. CROTCH STRAP
6. TILT CONTROL HANDLE
7. HORIZONTAL CONTROL HANDLE
8. RECLINE LOCK CONTROL HANDLE
9. LUMBER SUPPORT ADJUSTMENT CONTROL KNOB

NOTE:
Pilot's seat is shown. Copilot's seat is identical except seat controls are on the opposite sides.

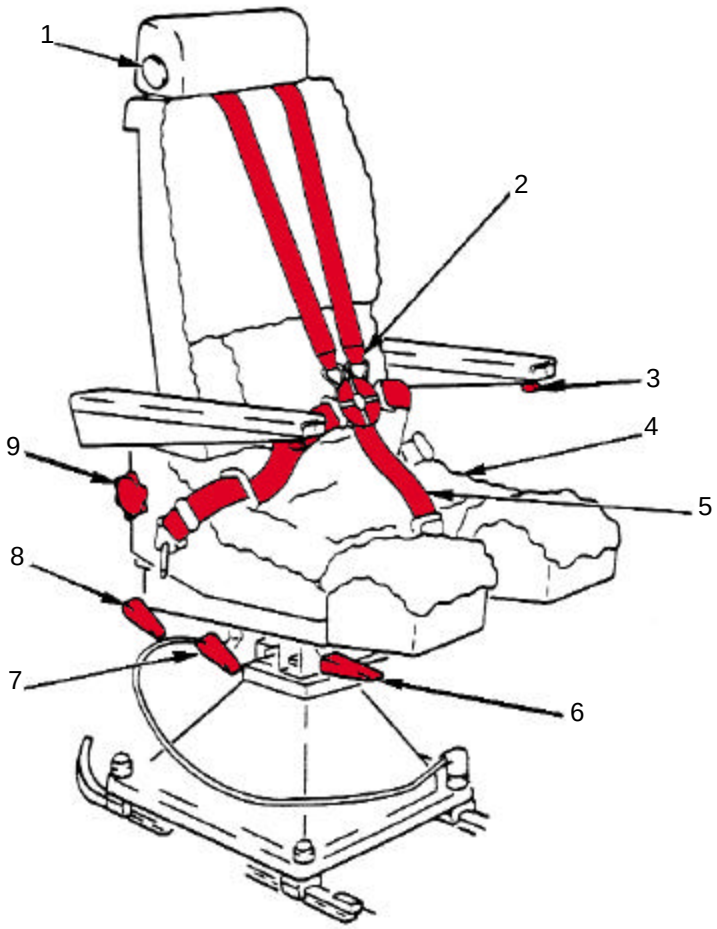

AIRCREW SEATING AND POSITIONING

ENGINEER'S/NAVIGATOR'S SEAT

LEGEND

1. SHOULDER HARNESS
2. ARMREST SWIVEL CONTROL BUTTON
3. RECLINE CONTROL HANDLE
4. FORWARD/AFT CONTROL HANDLE
5. VERTICAL CONTROL HANDLE
6. SWIVEL CONTROL HANDLE
7. LATERAL CONTROL HANDLE (not shown)
8. CROTCH STRAP
9. LAP BELT

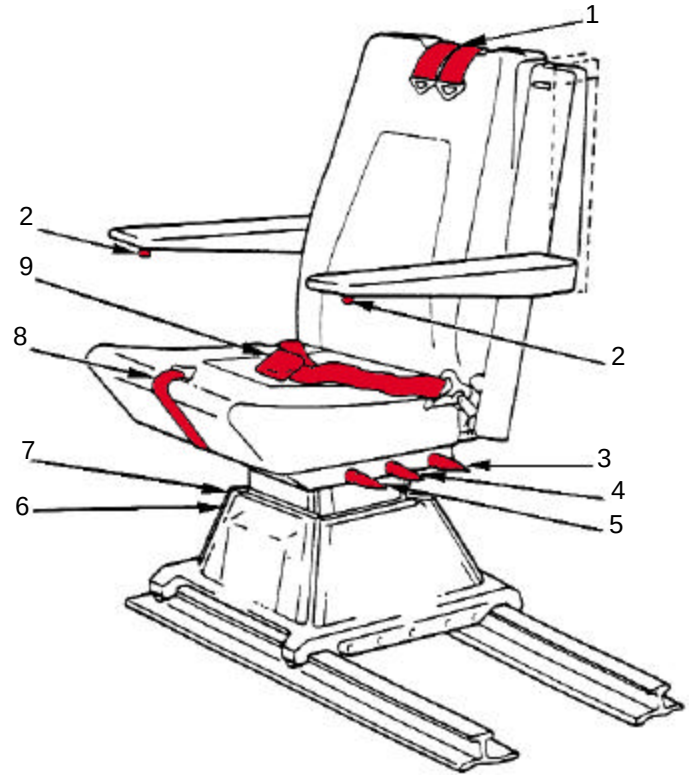

OBSERVER'S SEAT

LEGEND

1. OBSERVER'S PANEL
2. SEAT BACKREST
3. FOLD-OVER CONTROL HANDLE (not shown)
4. FORWARD/AFT CONTROL HANDLE (not shown)
5. FOLDING AND STOWAGE CONTROL HANDLE
6. RECLINE LOCK CONTROL HANDLE

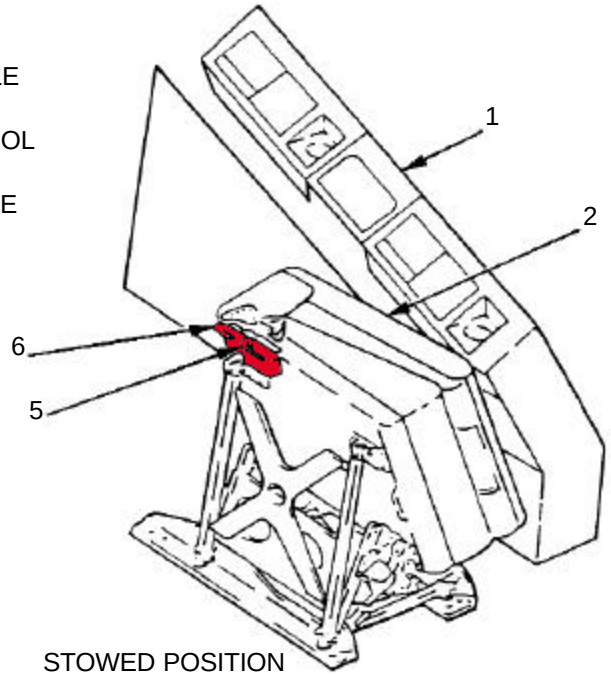

STOWED POSITION

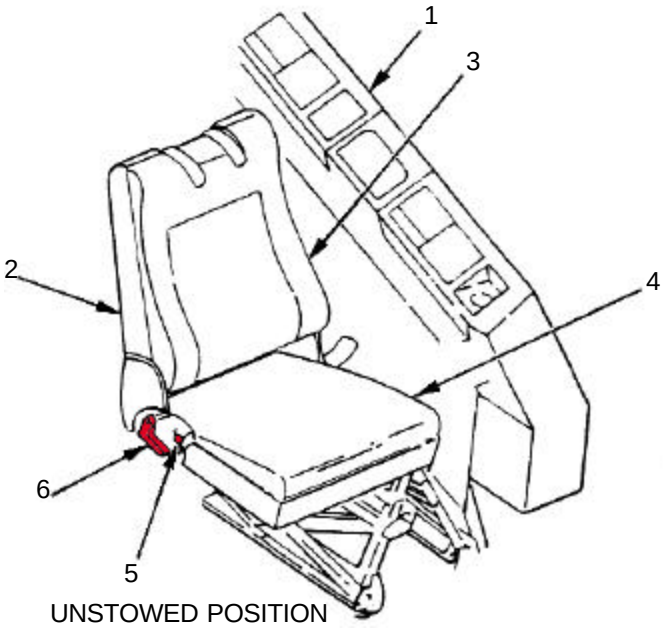

UNSTOWED POSITION